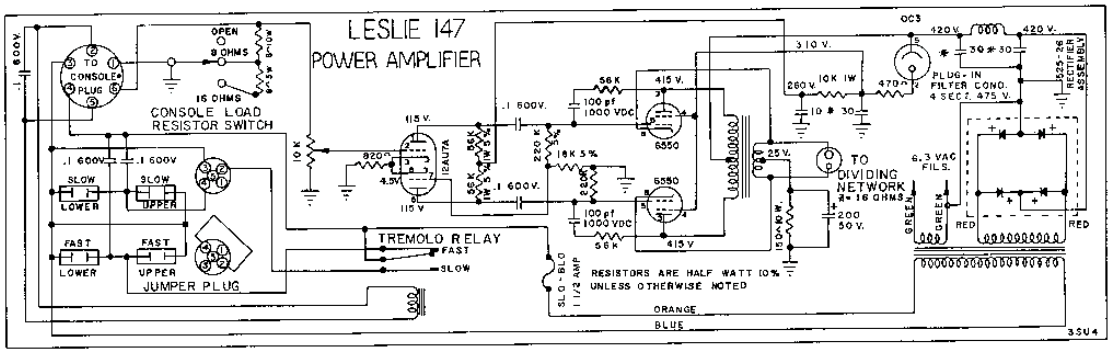
LESLIE 147
POWER AMPLIFIER
CONSOLE LOAD
RESISTOR SWITCH
JUMPER PLUG
TREMOLO RELAY
TO DIVIDING NETWORK
RESISTORS ARE HALF WATT 10%
UNLESS OTHERWISE NOTED
PLUG-IN FILTER COND.
6.3 VAC FILS.
3SU4

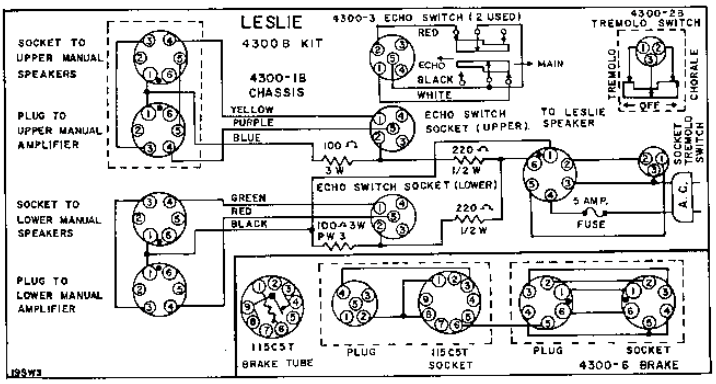
LESLIE
4300B KIT
4300-1B CHASSIS
4300-3 ECHO SWITCH (2 USED)
4300-2B TREMOLO SWITCH
SOCKET TO UPPER MANUAL SPEAKERS
PLUG TO UPPER MANUAL AMPLIFIER
SOCKET TO LOWER MANUAL SPEAKERS
PLUG TO LOWER MANUAL AMPLIFIER
ECHO SWITCH SOCKET (UPPER)
ECHO SWITCH SOCKET (LOWER)
TO LESLIE SPEAKER
5 AMP. FUSE
115C5T BRAKE TUBE
PLUG
115C5T SOCKET
PLUG
SOCKET
4300-6 BRAKE
19SW3

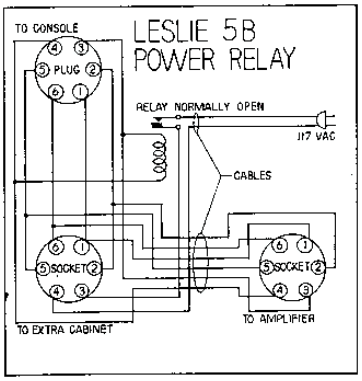
LESLIE 5B
POWER RELAY
TO CONSOLE
PLUG
RELAY NORMALLY OPEN
117 VAC
CABLES
SOCKET
SOCKET
TO EXTRA CABINET
TO AMPLIFIER