HCD-ZX9

SERVICE MANUAL

US Model
Mexican Model

Ver. 1.2 2007.02

- HCD-ZX9 is the tuner, deck, CD and amplifier section in FST-ZX9, LBT-ZX9.

CD Section	Model Name Using Similar Mechanism	HCD-ZX6/ZX8
	CD Mechanism Type	CDM79B-F1BD81
	Base Unit Name	BU-F1BD81A
	Optical Pick-up Name	KSM-215DCP/C2NP
TAPE Section	Model Name Using Similar Machanism	HCD-ZX6/ZX8
	Tape Mechanism Type	CWM43RR35

SPECIFICATIONS

AUDIO POWER SPECIFICATION (US MODEL)
POWER OUTPUT AND TOTAL HARMONIC DISTORTION:
With 6-ohm loads, both channels driven, from 120 Hz – 10 kHz; rates 140 watts per channel minimum RMS power, with no more than 10% total harmonic distortion from 250 milliwatts to rated output.

Amplifier section
US models:
The following measured at AC 120 V, 60 Hz
Mexican models:
The following measured at AC 127 V, 60 Hz
DIN power output (rated):
140 × 2 + 140 × 2 watts
(6 ohms at 1 kHz, DIN)
Continuous RMS power output (reference):
180 × 2 + 180 × 2 watts
(6 ohms at 1 kHz, 10% THD)
Inputs
PHONO IN (phono jack):
sensitivity 3 mV,
impedance 47 kOhms
MIC (phone jack): sensitivity 1 mV,
impedance 10 kOhms
GAME INPUT AUDIO L/R (phono jacks):
sensitivity 250 mV,
impedance 47 kOhms
GAME INPUT VIDEO (phono jack):
1 Vp-p, 75ohms
VIDEO/MD IN L/R (phono jacks):
sensitivity 250 mV/450 mV,
impedance 47 kOhms
Outputs
PHONES (stereo phone jack):
accepts headphones of
8 ohms or more
VIDEO/MD OUT L/R (phono jacks):
voltage 250 mV,
impedance 1 kOhm
VIDEO OUT (phono jack):
max. output level 1 Vp-p,
load impedance 75 ohms
SPEAKER:
FRONT L/R Use only the supplied speaker SS-ZX9
SURROUND L/R Use only the supplied speaker SS-ZX9

– Continued on next page –

COMPONENT Hi-Fi STEREO SYSTEM

9-887-372-03
2007B04-1
© 2007.02

Sony Corporation
Home Audio Division
Published by Sony Techno Create Corporation

SONY®

CD/MP3 player section

System	Compact disc and digital audio system
Laser	Semiconductor laser (λ=780 nm) Emission duration: continuous
Laser Output	Max. 44.6 μW* * This output is the value measured at a distance of 200 mm from the objective lens surface on the Optical Pick-up Block with 7 mm aperture.
Frequency response	2 Hz – 20 kHz (±0.5 dB)
Wave length	780 – 790 nm
Signal-to-noise-ratio	More than 90 dB
Dynamic range	More than 90 dB
OPTICAL CD DIGITAL OUT (Square optical connector jack, rear panel)	
Wave length	660 nm
Output level	–18 dBm

Tape deck section

Recording system	4-track 2-channel, stereo
Frequency response	50 – 13,000 Hz (±3 dB), using Sony TYPE I tapes
Wow and flutter	±0.15% W. Peak (IEC) 0.1% W. RMS (NAB) ±0.2% W. Peak (DIN)

Tuner section

FM stereo, FM/AM superheterodyne tuner

FM tuner section

Tuning range	87.5 – 108.0 MHz
Antenna	FM lead antenna
Antenna terminals	75 ohms unbalanced
Intermediate frequency	10.7 MHz

AM tuner section

Tuning range	530 – 1,710 kHz (with the tuning interval set at 10 kHz) 531 – 1,710 kHz (with the tuning interval set at 9 kHz)
Antenna	AM loop antenna
Antenna terminals	External antenna terminal
Intermediate frequency	450 kHz

General

US models:	
Power requirements	120 V, 60 Hz
Mexican models:	
Power requirements	127 V, 60 Hz
Power consumption	330 watts
Dimensions (w/h/d) (Main Unit)	Approx. 362 × 437 × 465 mm (14 1/4 × 17 1/4 × 18 1/4 inches)
Mass (Main Unit)	Approx. 19.0 kg (14 lb 15 oz)
Supplied accessories:	AM loop antenna (1) FM lead antenna (1) Remote Commander (1) Batteries (2) Speaker cords: –grey (10m) (33 ft) (2) –white (3m) (10 ft) (2) Speaker pads (16)

Design and specifications are subject to change without notice.

SAFETY-RELATED COMPONENT WARNING!!

COMPONENTS IDENTIFIED BY MARK ⚠ OR DOTTED LINE WITH MARK ⚠ ON THE SCHEMATIC DIAGRAMS AND IN THE PARTS LIST ARE CRITICAL TO SAFE OPERATION. REPLACE THESE COMPONENTS WITH SONY PARTS WHOSE PART NUMBERS APPEAR AS SHOWN IN THIS MANUAL OR IN SUPPLEMENTS PUBLISHED BY SONY.

Notes on Chip Component Replacement

- Never reuse a disconnected chip component.
- Notice that the minus side of a tantalum capacitor may be damaged by heat.

Flexible Circuit Board Repairing

- Keep the temperature of soldering iron around 270°C during repairing.
- Do not touch the soldering iron on the same conductor of the circuit board (within 3 times).
- Be careful not to apply force on the conductor when soldering or unsoldering.

UNLEADED SOLDER

Boards requiring use of unleaded solder are printed with the lead free mark (LF) indicating the solder contains no lead.
(Caution: Some printed circuit boards may not come printed with the lead free mark due to their particular size)

: LEAD FREE MARK

Unleaded solder has the following characteristics.

- Unleaded solder melts at a temperature about 40 °C higher than ordinary solder.
  Ordinary soldering irons can be used but the iron tip has to be applied to the solder joint for a slightly longer time.
  Soldering irons using a temperature regulator should be set to about 350 °C.
  Caution: The printed pattern (copper foil) may peel away if the heated tip is applied for too long, so be careful!
- Strong viscosity
  Unleaded solder is more viscou-s (sticky, less prone to flow) than ordinary solder so use caution not to let solder bridges occur such as on IC pins, etc.
- Usable with ordinary solder
  It is best to use only unleaded solder but unleaded solder may also be added to ordinary solder.

CAUTION

Use of controls or adjustments or performance of procedures other than those specified herein may result in hazardous radiation exposure.

NOTES ON HANDLING THE OPTICAL PICK-UP BLOCK OR BASE UNIT

The laser diode in the optical pick-up block may suffer electrostatic breakdown because of the potential difference generated by the charged electrostatic load, etc. on clothing and the human body.
During repair, pay attention to electrostatic break-down and also use the procedure in the printed matter which is included in the repair parts.
The flexible board is easily damaged and should be handled with care.

NOTES ON LASER DIODE EMISSION CHECK

The laser beam on this model is concentrated so as to be focused on the disc reflective surface by the objective lens in the optical pick-up block. Therefore, when checking the laser diode emission, observe from more than 30 cm away from the objective lens.

Laser component in this product is capable of emitting radiation exceeding the limit for Class 1.

This appliance is claassified as a CLASS 1 LASER product. This label is located on the rear exterior.

SAFETY CHECK-OUT (US MODEL)

After correcting the original service problem, perform the following safety check before releasing the set to the customer:
Check the antenna terminals, metal trim, "metallized" knobs, screws, and all other exposed metal parts for AC leakage.
Check leakage as described below.

LEAKAGE TEST

The AC leakage from any exposed metal part to earth ground and from all exposed metal parts to any exposed metal part having a return to chassis, must not exceed 0.5 mA (500 microampers.). Leakage current can be measured by any one of three methods.

1. A commercial leakage tester, such as the Simpson 229 or RCA WT-540A. Follow the manufacturers' instructions to use these instruments.
2. A battery-operated AC milliammeter. The Data Precision 245 digital multimeter is suitable for this job.
3. Measuring the voltage drop across a resistor by means of a VOM or battery-operated AC voltmeter. The "limit" indication is 0.75 V, so analog meters must have an accurate low-voltage scale. The Simpson 250 and Sanwa SH-63Trd are examples of a passive VOM that is suitable. Nearly all battery operated digital multimeters that have a 2 V AC range are suitable. (See Fig. A)

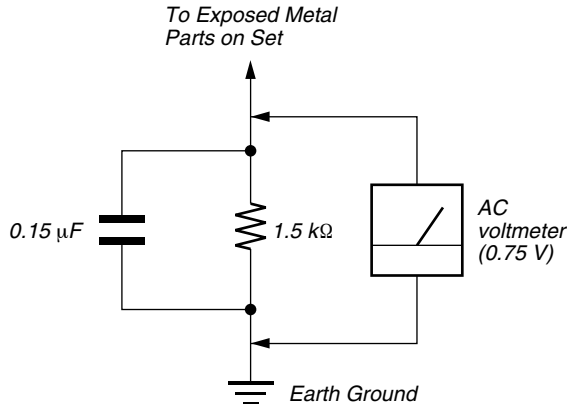

Fig. A. Using an AC voltmeter to check AC leakage.

MODEL IDENTIFICATION

– BACK PANEL –

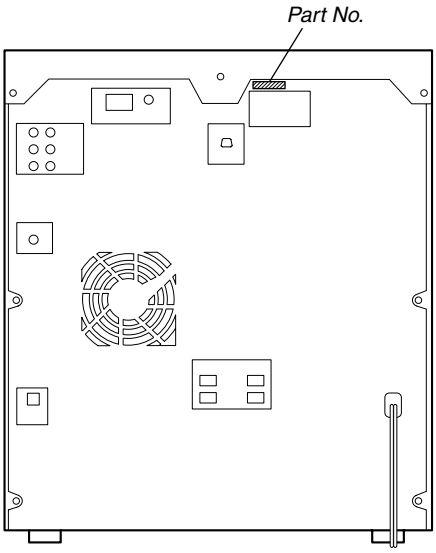

MODEL	PART No.
Mexican	2-649-004-2☐
US	2-649-004-3☐

PLAYABLE DISC

You can playback the following discs on this system. The other discs cannot be played back.

List of playable discs

Format of discs	Disc logo	Contents
Audio CDs	COMPACT disc DIGITAL AUDIO TEXT	Audio
CD-R/CD-RW (Audio CDs)	COMPACT disc DIGITAL AUDIO Recordable COMPACT disc DIGITAL AUDIO ReWritable	Audio
CD-R/CD-RW (Discs with MP3 audio tracks)	COMPACT disc DIGITAL AUDIO Recordable COMPACT disc DIGITAL AUDIO ReWritable COMPACT disc Recordable COMPACT disc ReWritable	Audio

TABLE OF CONTENTS

1. SERVICE NOTE
1-1. Service Position of CD BU Block 6
1-2. Service Position of TC Mechanism, Panel Board 7
1-3. Service Position of Power Board 8
1-4. Service Position of CD Changer 8

2. GENERAL
List of Button Locations and Reference Pages 9

3. DISASSEMBLY
3-1. Case 13
3-2. Loading Panel 13
3-3. Front Panel Section 14
3-4. Tape Mechanism Deck 14
3-5. Game-in/hp Board, Mic Board 15
3-6. Back Panel Section 15
3-7. CD Mechanism Section 16
3-8. Main Board 17
3-9. Table Assy 17
3-10. SE-130 Board 18
3-11. TD Belt 18
3-12. DC Motor (M901) 19
3-13. Optical Pick-up 19
3-14. BD81A Board 20

4. TEST MODE 21

5. MECHANICAL ADJUSTMENTS 25

6. ELECTRICAL ADJUSTMENTS 25

7. DIAGRAMS
7-1. Circuit Boards Location 28
7-2. Block Diagram –CD Servo Section– 29
7-3. Block Diagram –Tuner/Tape Deck Section– 30
7-4. Block Diagram –Main Section– 31
7-5. Block Diagram –Display/Power Section– 32
7-6. Printed Wiring Board –BD Section– 34
7-7. Schematic Diagram –BD Section– 35
7-8. Printed Wiring Boards –Loading Section– 36
7-9. Schematic Diagram –Loading Section– 37
7-10. Schematic Diagram –Main Section (1/4)– 38
7-11. Schematic Diagram –Main Section (2/4)– 39
7-12. Schematic Diagram –Main Section (3/4)– 40
7-13. Schematic Diagram –Main Section (4/4)– 41
7-14. Printed Wiring Board –Main Section– 42
7-15. Printed Wiring Boards –Power Section– 43
7-16. Schematic Diagram –Power Section (1/2)– 44
7-17. Schematic Diagram –Power Section (2/2)– 45
7-18. Printed Wiring Board –Panel Section– 46
7-19. Schematic Diagram –Panel Section– 47
7-20. Printed Wiring Boards –Volume Section– 48
7-21. Printed Wiring Board –Mic Section– 49
7-22. Schematic Diagram –Volume, Mic Section– 50
7-23. Schematic Diagram –Switch Section– 51
7-24. Printed Wiring Boards –Switch Section (1/2)– 52
7-25. Printed Wiring Boards –Switch Section (2/2)– 53
7-26. Printed Wiring Boards –Jack Section– 54
7-27. Schematic Diagram –Jack Section– 55
7-28. Printed Wiring Board –Lighting Section– 56
7-29. Schematic Diagram –Lighting Section– 56
7-30. Printed Wiring Board –Surround Section– 57
7-31. Schematic Diagram –Surround Section– 58
7-32. Printed Wiring Boards –Transformer Section– 59
7-33. Schematic Diagram –Transformer Section– 60

8. EXPLODED VIEWS
8-1. Back Panel Section 71
8-2. Front Panel Section (1) 72
8-3. Front Panel Section (2) 73
8-4. Chassis Section 74
8-5. CD Mechanism Section (1) 75
8-6. CD Mechanism Section (2) 76

9. ELECTRICAL PARTS LIST 77

SECTION 1
SERVICE NOTE

1-1. SERVICE POSITION OF CD BU BLOCK

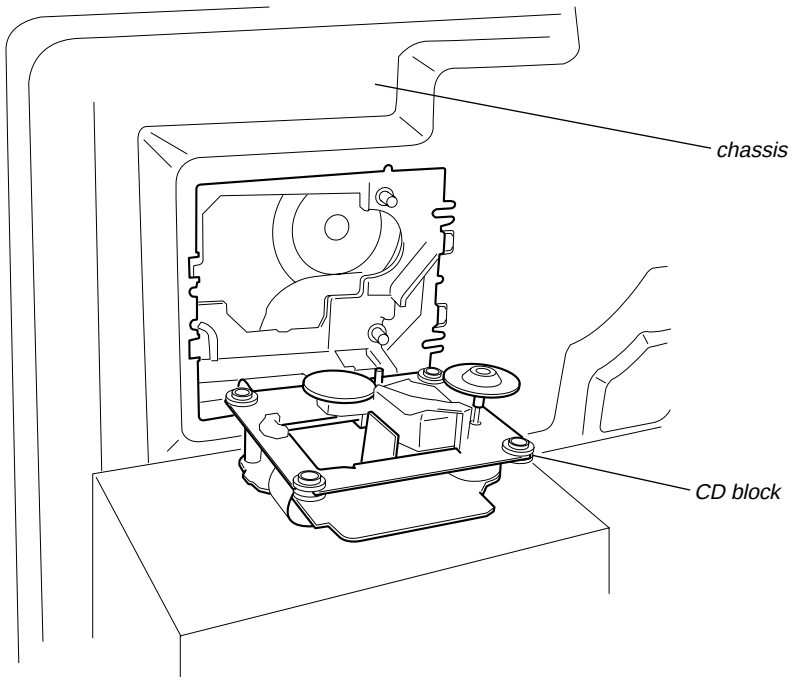

1-2. SERVICE POSITION OF TC MECHANISM, PANEL BOARD

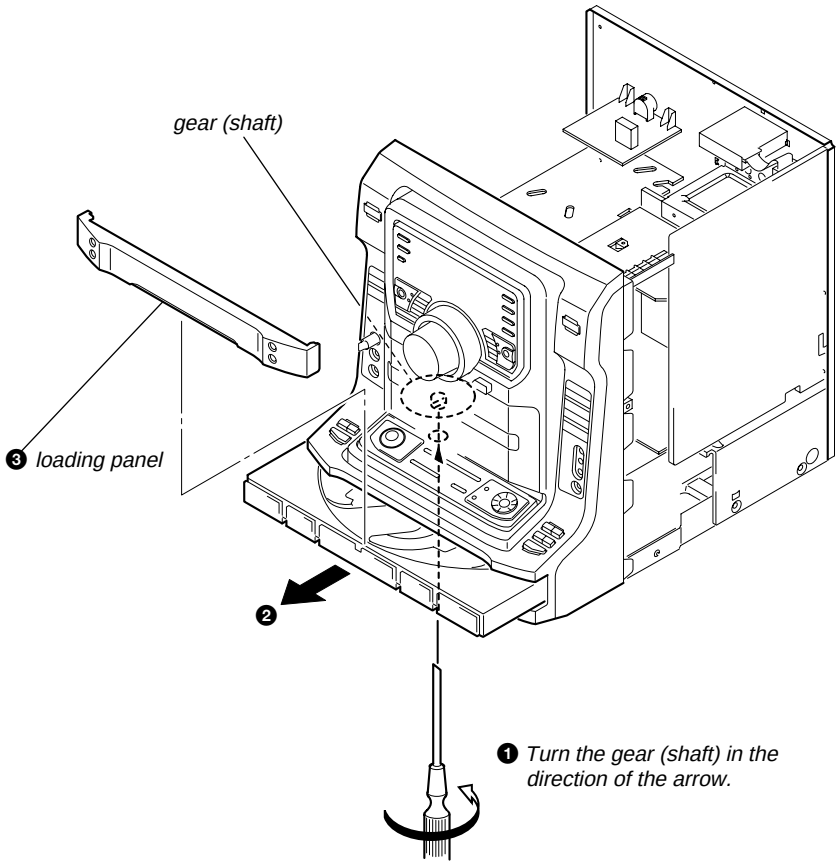

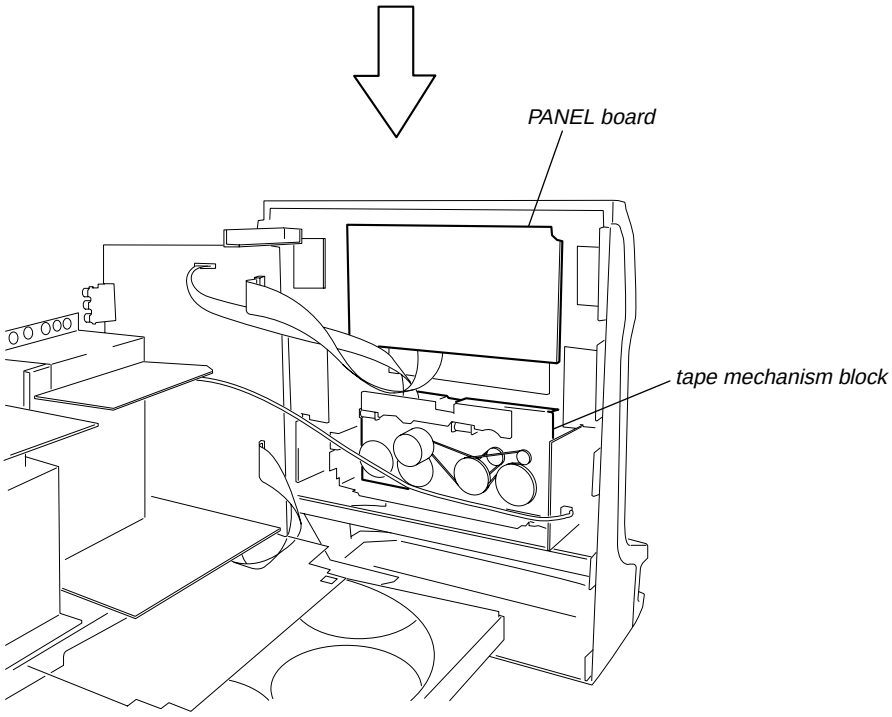

1-3. SERVICE POSITION OF POWER BOARD

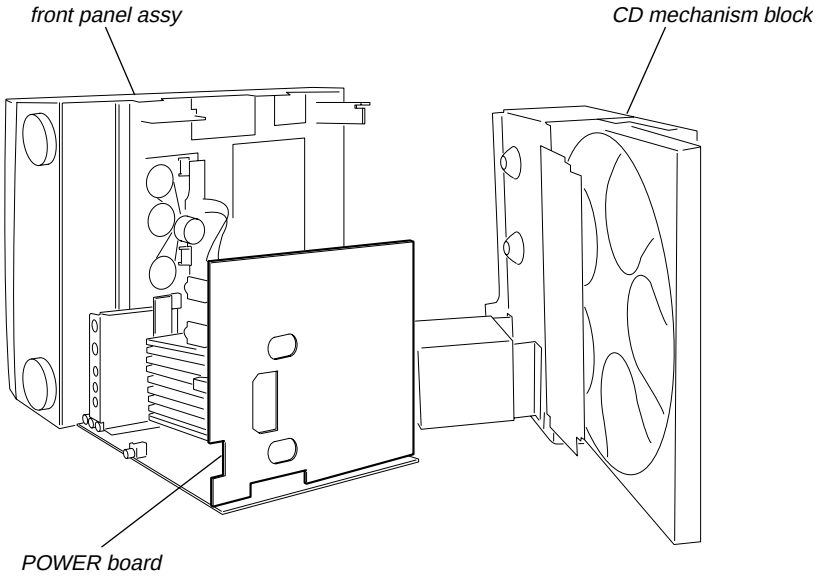

1-4. SERVICE POSITION OF CD CHANGER

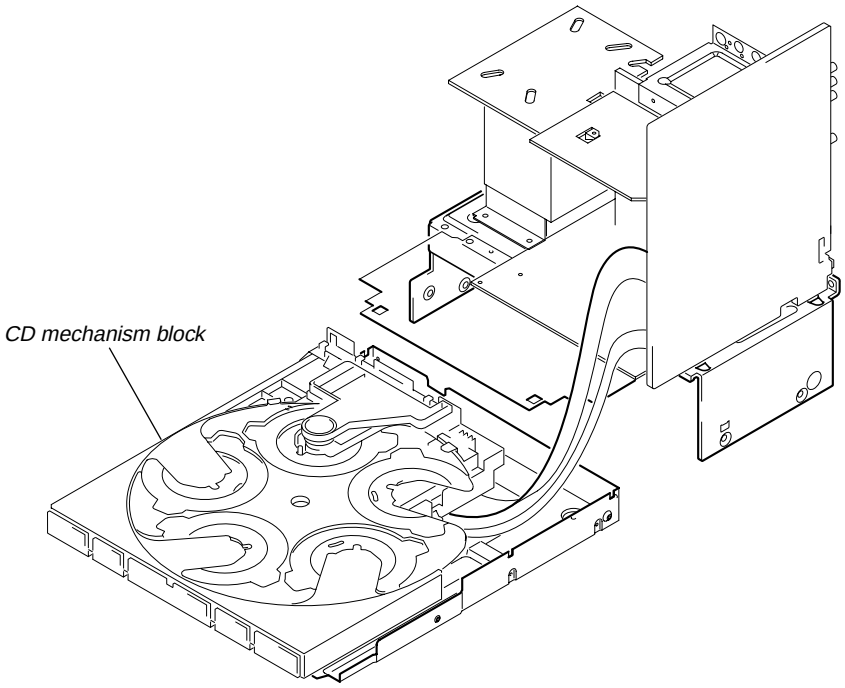

SECTION 2
GENERAL

This section is extracted from instruction manual.

List of button locations and reference pages

How to use pages 41 to 43

Use this page to find the location of buttons and other parts of the system that are mentioned in the text.

Illustration number
↓
PLAY MODE 40
↑
Name of button/part

Main unit

ALPHABETICAL ORDER

A - D

ALBUM +/– 46
AMP MENU 15
CD SYNC 19
CLOCK/TIMER SELECT 2
CLOCK/TIMER SET 5
Deck A 30
Deck B 25
DIRECTION 34
DISC 1 ~ 5 43
DISC SKIP 50
Disc tray 31
DISPLAY 3
Display 6

E - H

EDIT 51
EFFECT ON/OFF 17
ENTER 16
EX-CHANGE 49
FLASH 42
FM MODE 8
FUNCTION 12
GAME 21
GAME INPUT AUDIO L/R jacks 22
GAME INPUT VIDEO jack 22
GAME MIXING 20

I - Q

ILLUMINATION 39
IR (receptor) 38
JOG 45
MEMORY 9
MIC 1/MIC 2 jacks 32
MIC LEVEL 33
MODE 47
P FILE 35
PHONES jack 23
PLAY MODE 40
Power illuminator 28
Preset Effect buttons 7
SALSA/REGGAE/POP/SAMBA/TANGO/ROCK/JAZZ/DANCE/MOVIE/GAME

R - Z

REC PAUSE/START 24
REPEAT 41
SLEEP 4
SPEAKERS 47
SURROUND 37
TUNER ENTER 13
TUNER/BAND 10
TUNING +/– 11
TUNING MODE 14
VOLUME +/– 27
X-GROOVE 36
X-ROUND ON/OFF 44

SYMBOLS

I/⏻ (power) 1

A ⏏ 29
⏏ B 26
↑/↓/←/→ 16
CD Function:
⏏ OPEN/CLOSE 48
►II (play/pause) 46
■ (stop) 46
◄◄/►► (rewind/fast forward) 46
I◄◄/►►I (go backward/go forward) 46
TAPE A function:
◁/▷ (play) 34
■ (stop) 34
I◄◄ ◄◄/►► ►►I 34
TAPE B function:
◁/▷ (play) 18
■ (stop) 18
I◄◄ ◄◄/►► ►►I 18

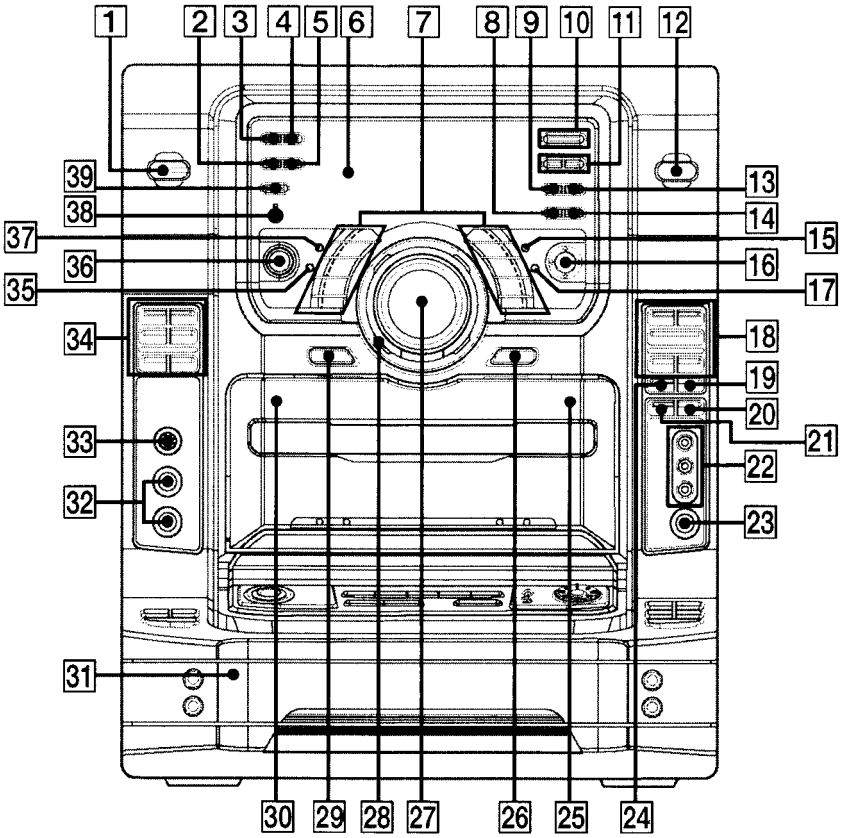
1
2
3
4
5
6
7
8
9
10
11
12
13
14
15
16
17
18
19
20
21
22
23
24
25
26
27
28
29
30
31
32
33
34
35
36
37
38
39

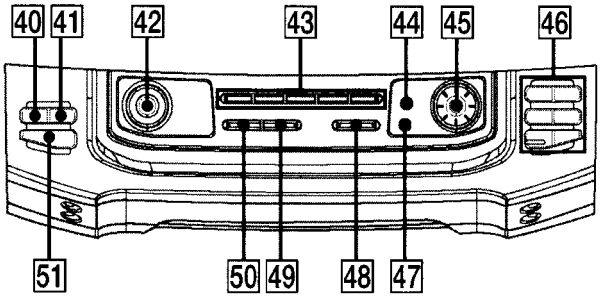
40
41
42
43
44
45
46
47
48
49
50
51

continued

Remote control

ALPHABETICAL ORDER

A – E

ALBUM + 14
ALBUM – 16
CD 24
CLEAR 18
CLOCK/TIMER SELECT 2
CLOCK/TIMER SET 4
DISC SKIP 13
DISPLAY 26
ENTER 12
EQ 17

F – Z

FM MODE 6
FUNCTION 8
PLAY MODE 5
REPEAT 6
SLEEP 1
TAPE 23
TUNER/BAND 7
TUNER MEMORY 25
TUNING MODE 5
VOLUME +/– 15

SYMBOLS

I/⏻ (power) 3
■ (stop) 11
❚❚ (pause) 19
► (play) 20
–⏮ (go backward) 22
⏭+ (go forward) 21
◄◄ (rewind) 10
►► (fast forward) 9

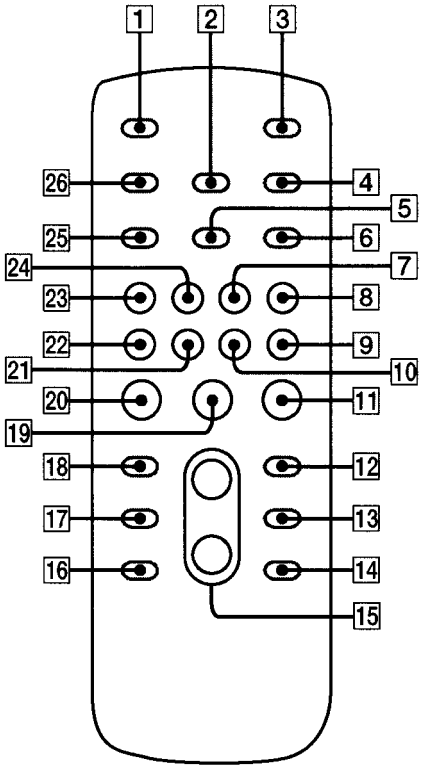

SECTION 3
DISASSEMBLY

Note : Disassemble the unit in the order as shown below.

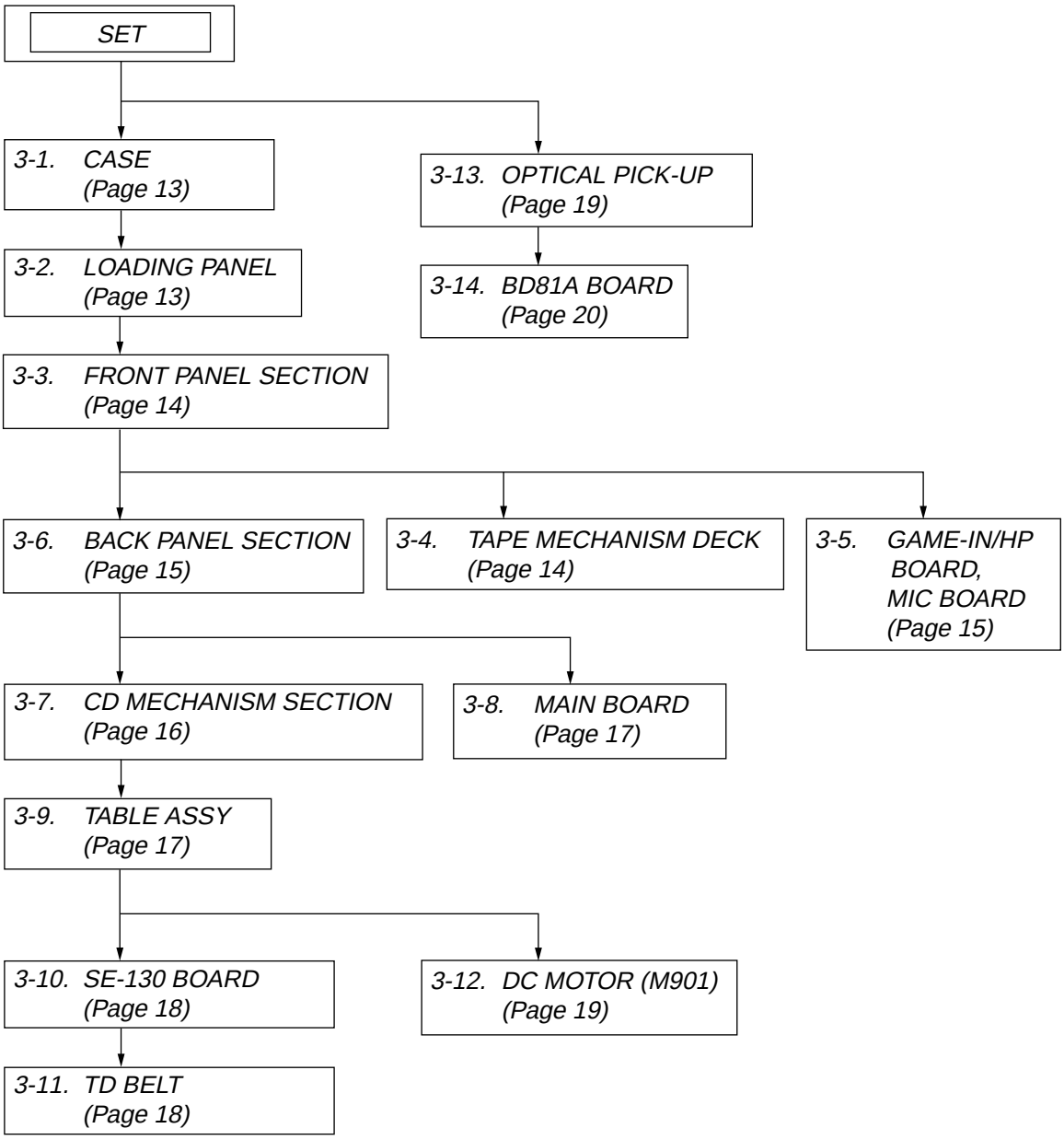

Note : Follow the disassembly procedure in the numerical order given.

3-1. CASE

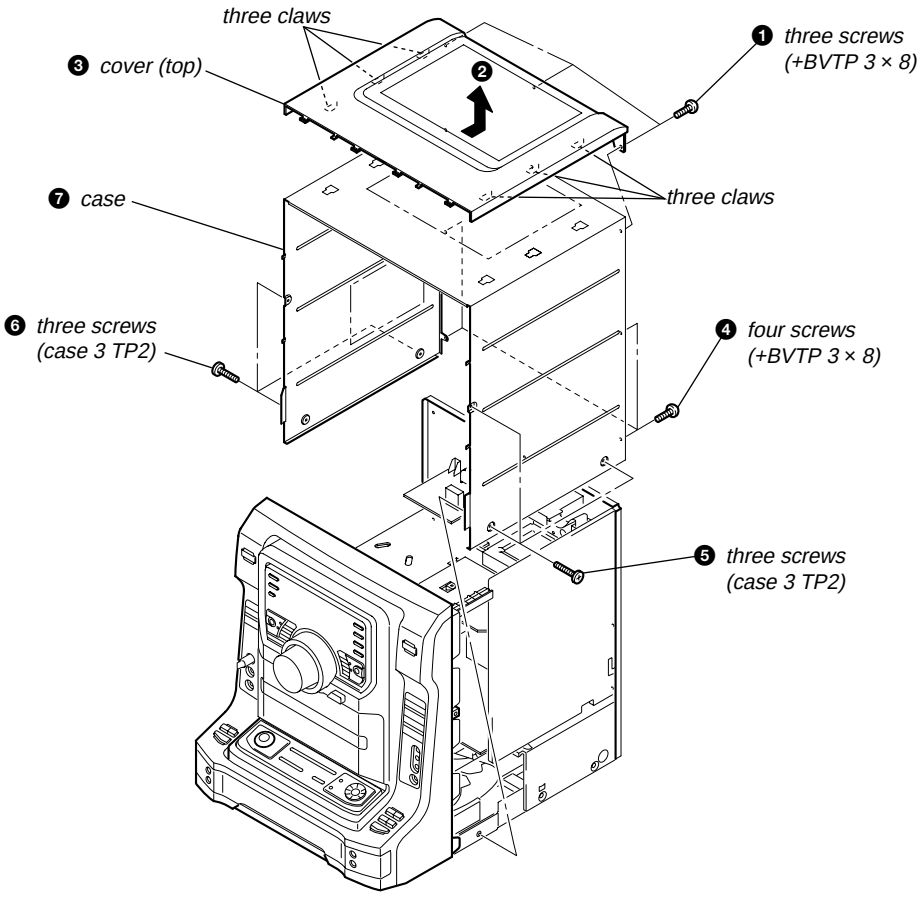

3-2. LOADING PANEL

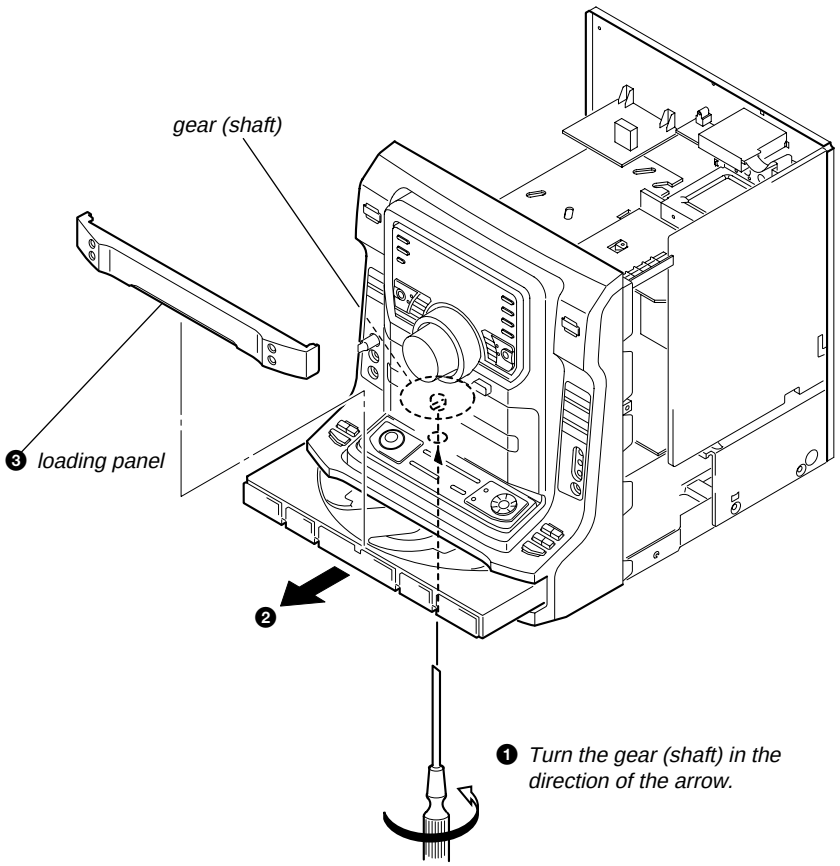

3-3. FRONT PANEL SECTION

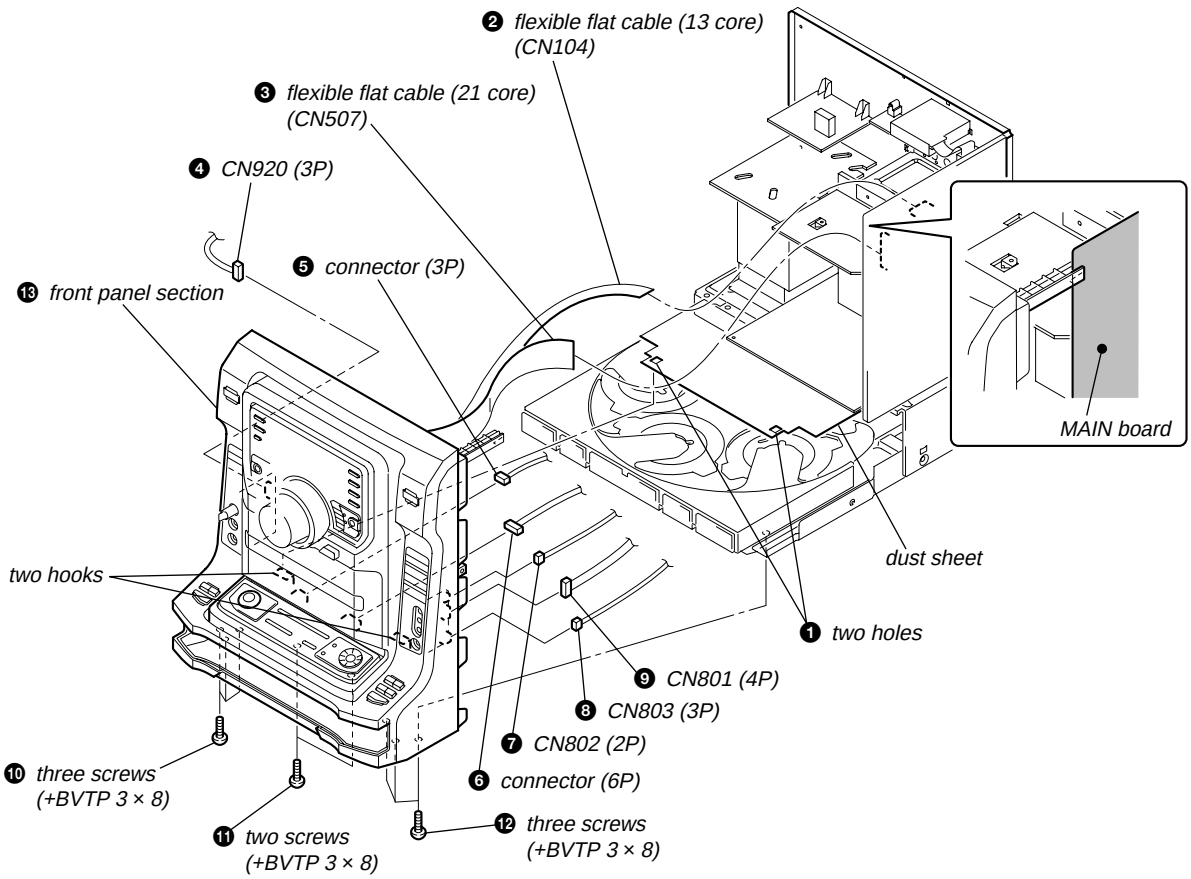

3-4. TAPE MECHANISM DECK

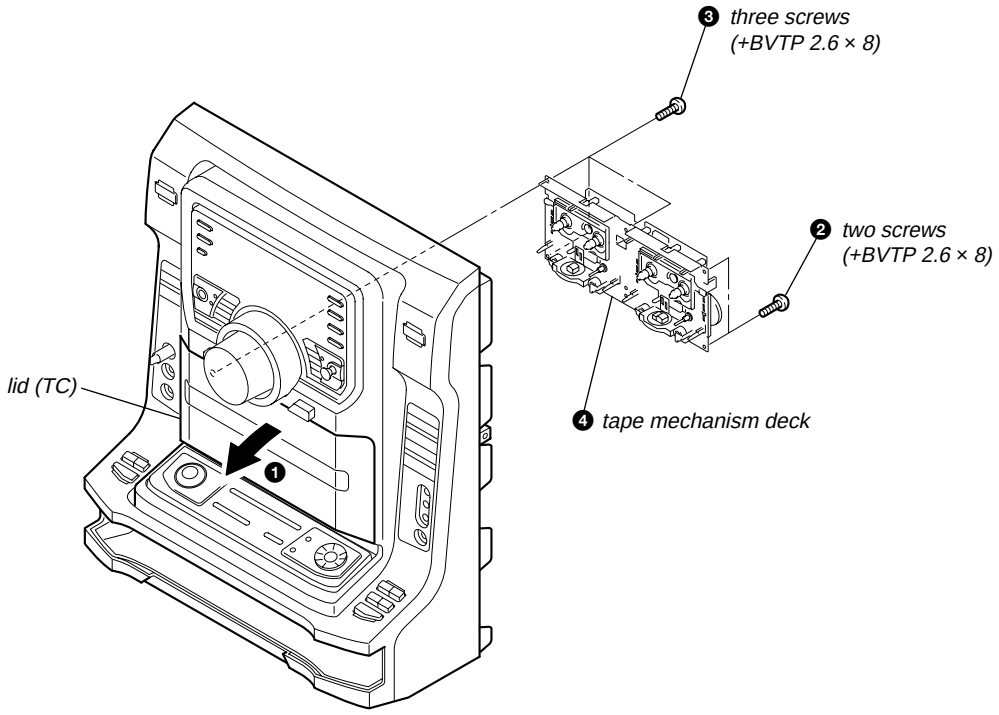

3-5. GAME-IN/HP BOARD, MIC BOARD

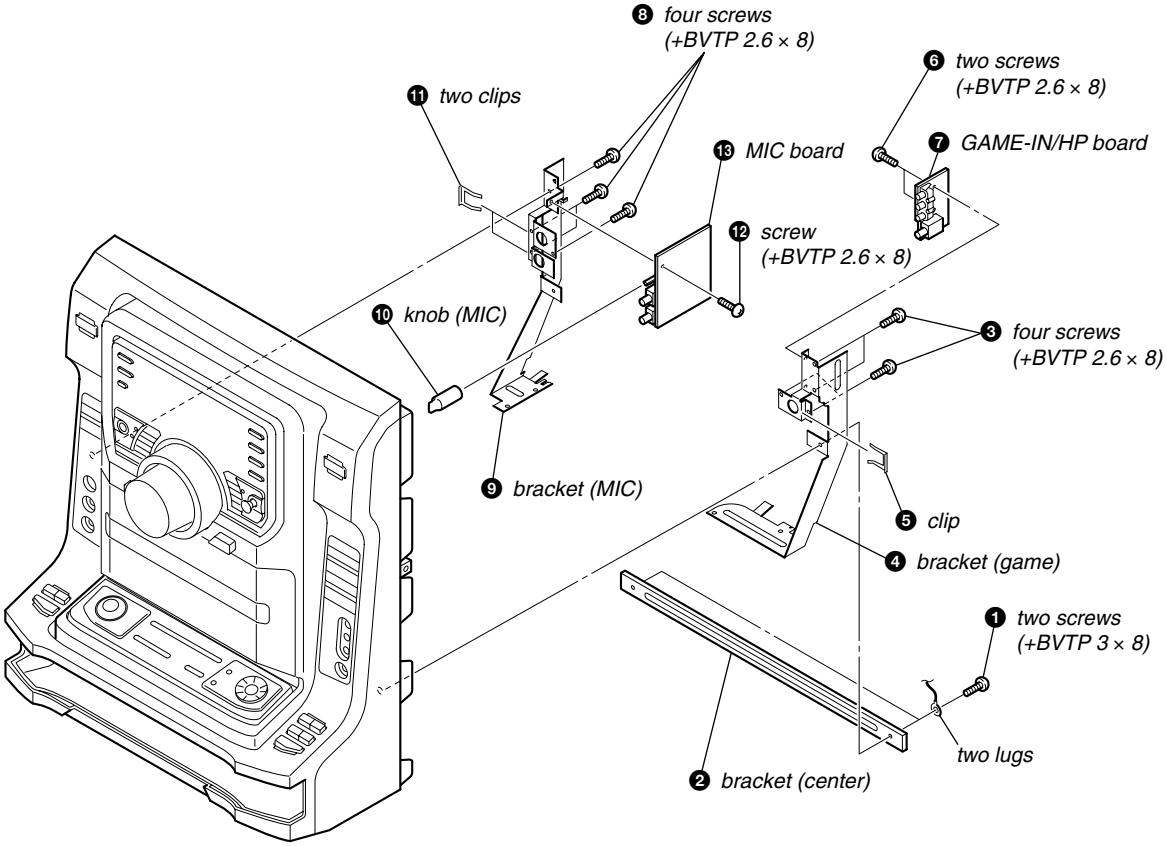

3-6. BACK PANEL SECTION

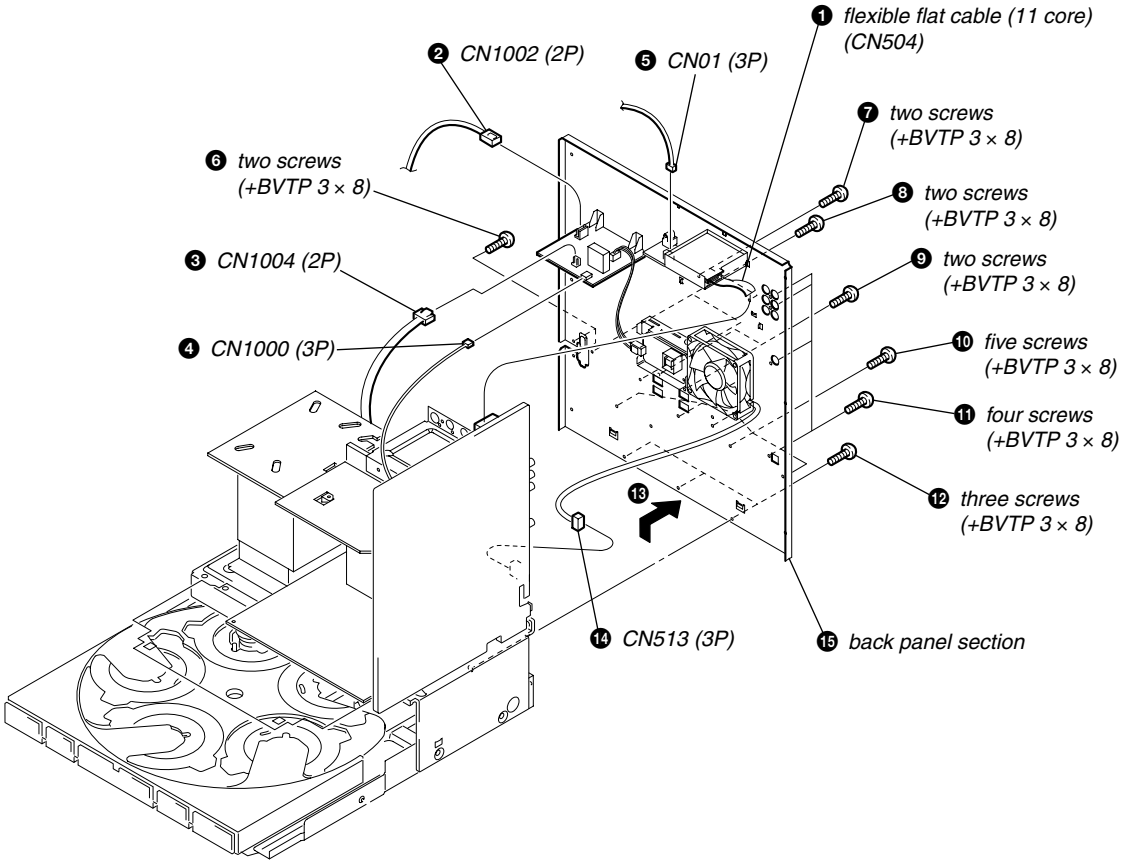

3-7. CD MECHANISM SECTION

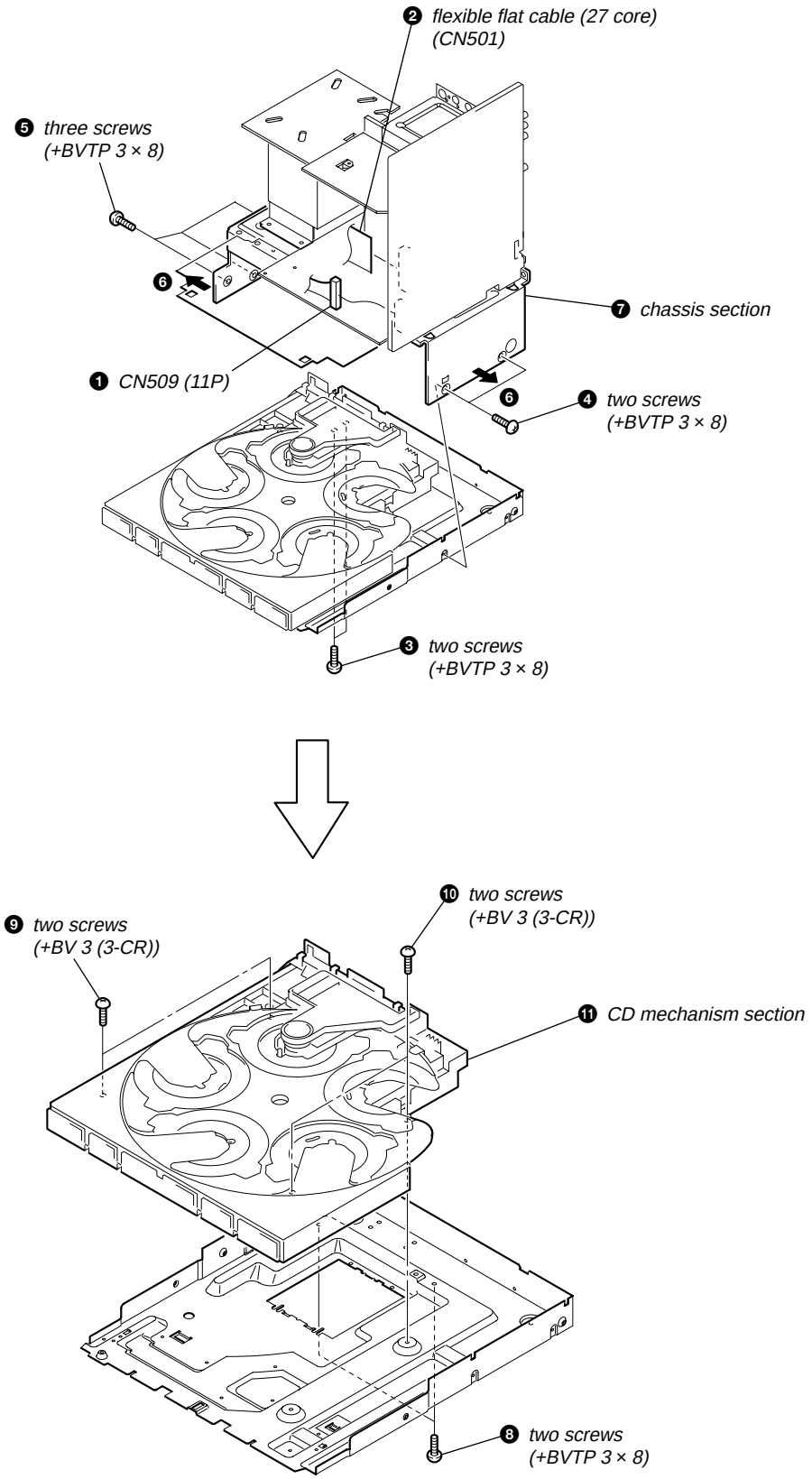

3-8. MAIN BOARD

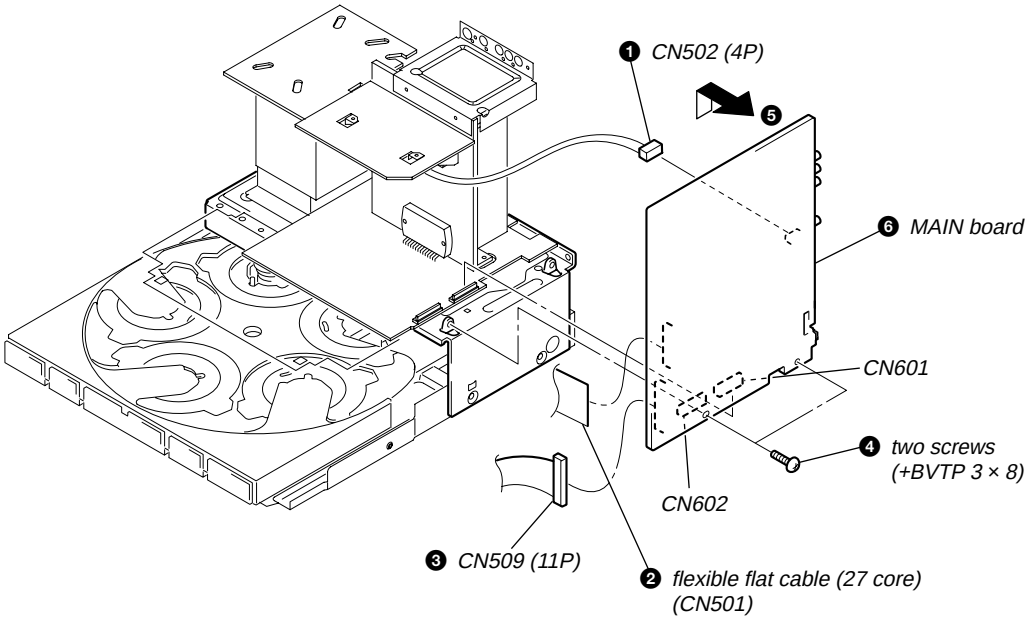

3-9. TABLE ASSY

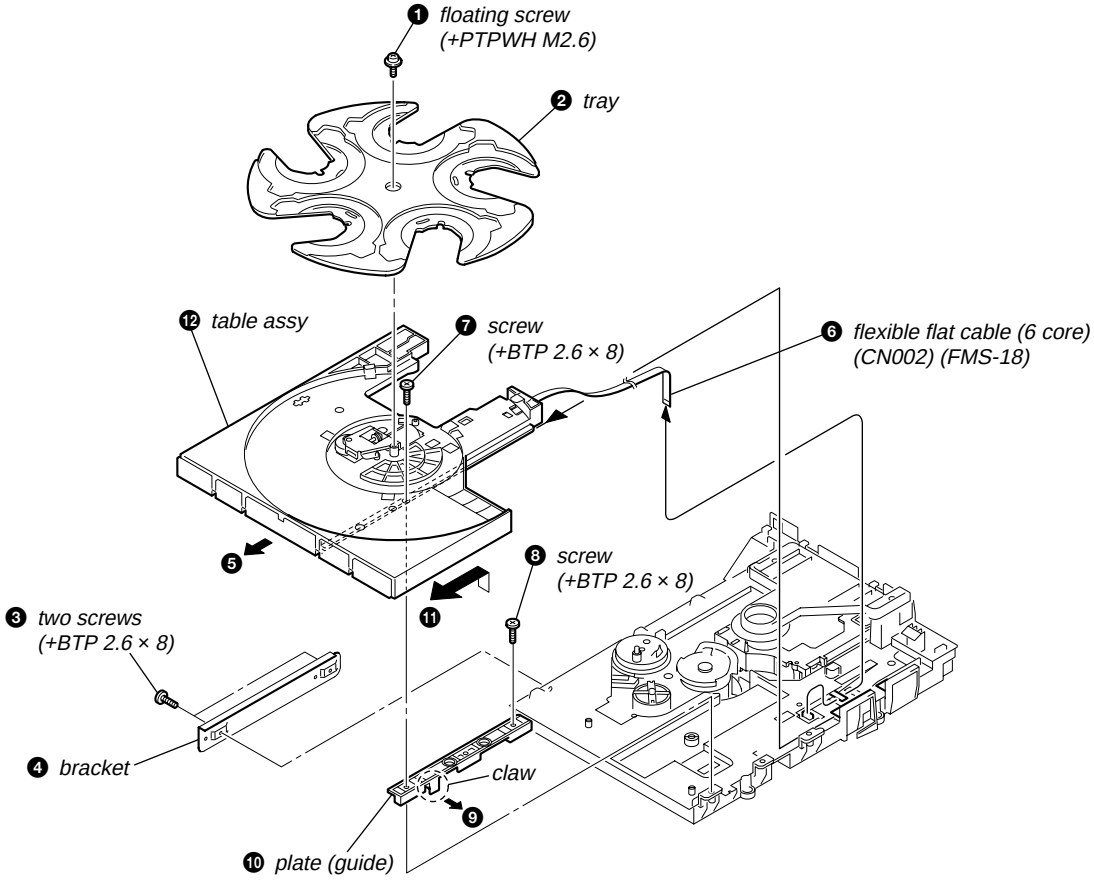

3-10. SE-130 BOARD

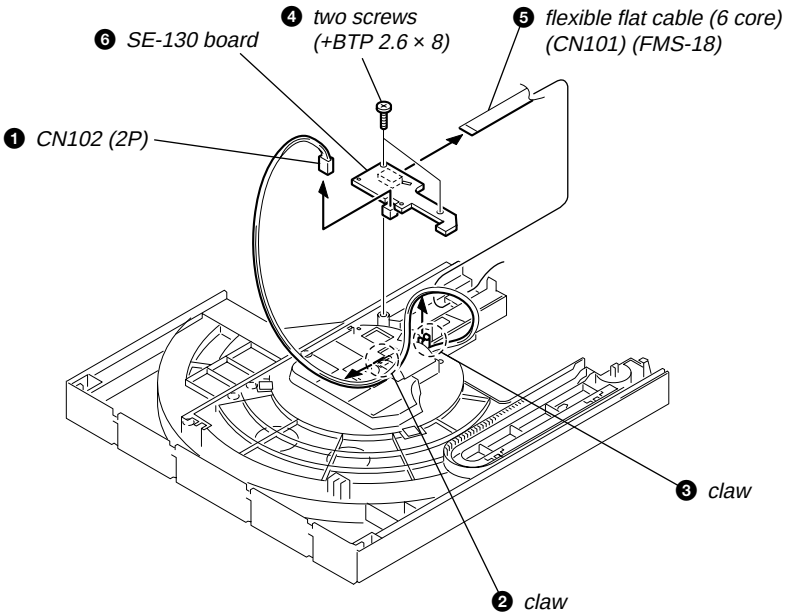

3-11. TD BELT

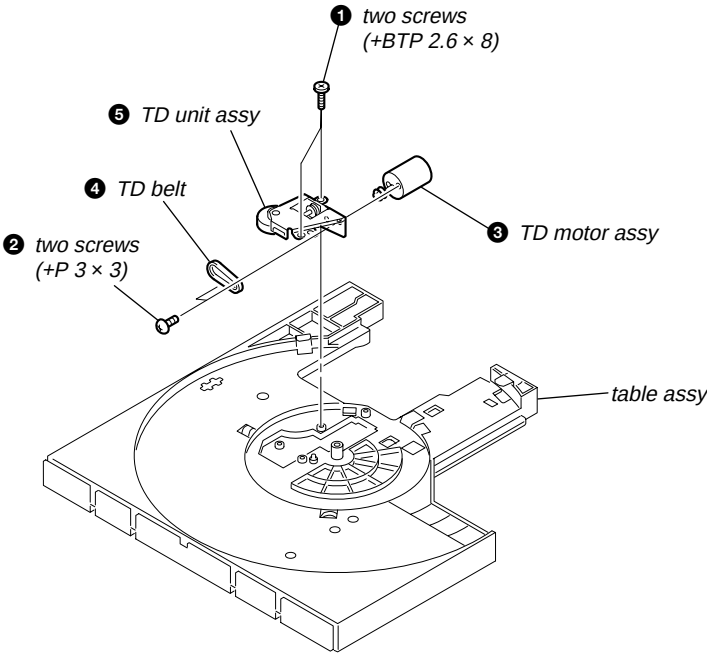

3-12. DC MOTOR (M901)

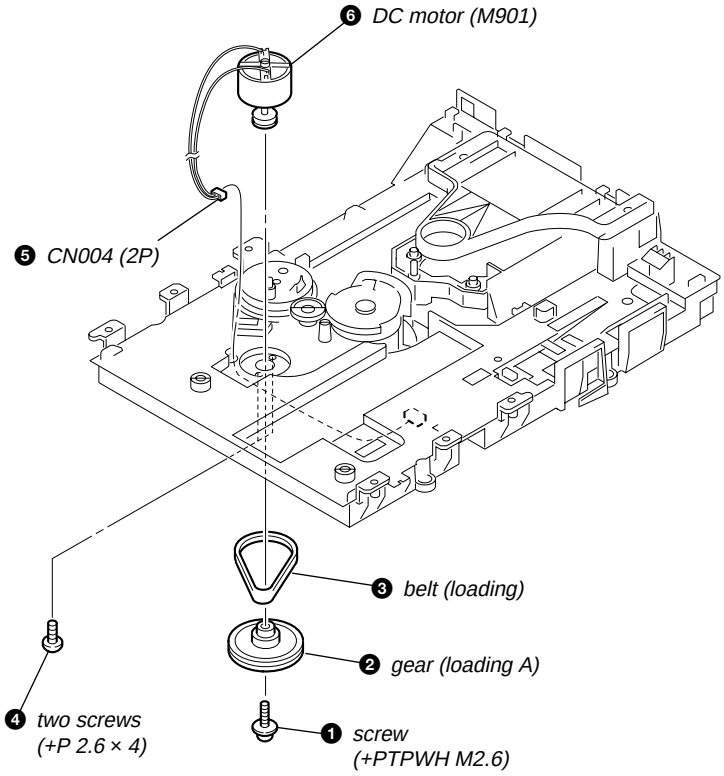

3-13. OPTICAL PICK-UP

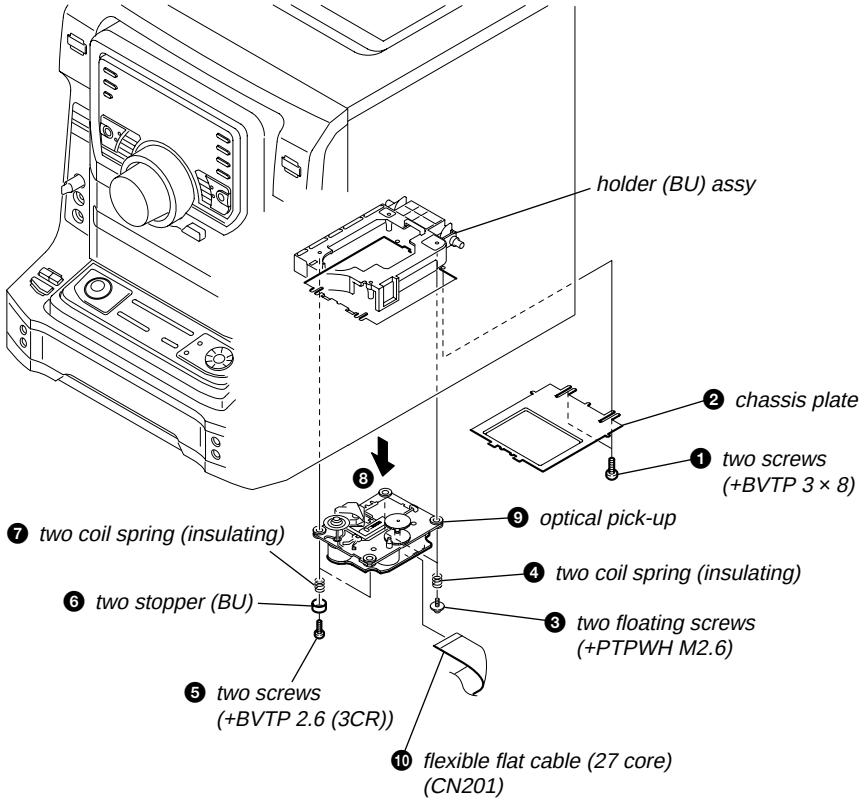

3-14. BD81A BOARD

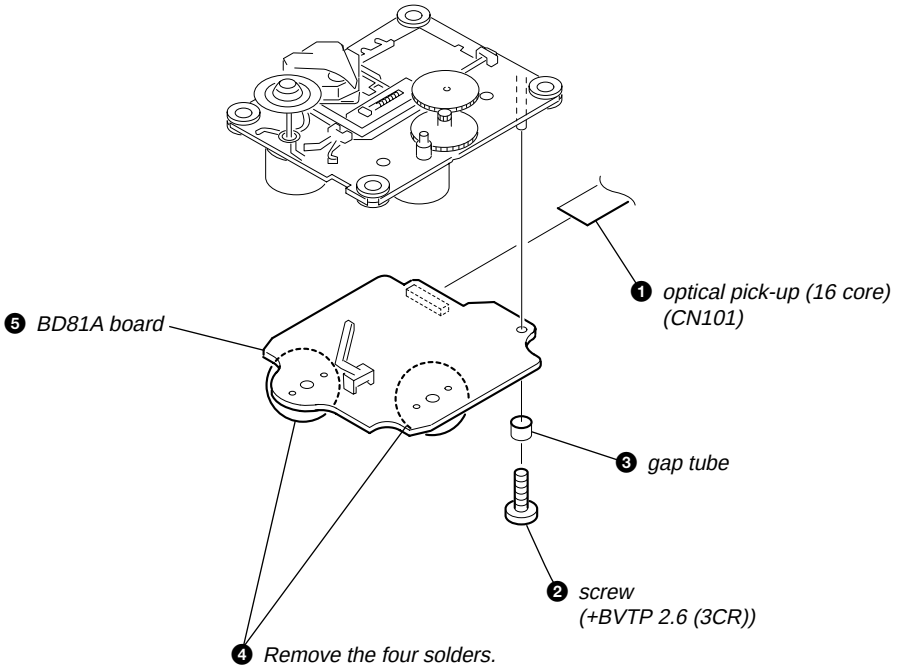

SECTION 4
TEST MODE

[GC TEST MODE]

- This mode is used to check the fluorescent indicator tube, LED, model, destination, software version, volume, key, jog and VACS level.

Procedure:

1. Press ■ (TAPE B) button, TUNER ENTER button and DISC 2 button simultaneously.
2. All LEDs and segments in fluorescent indicator tube are lighted up.
3. When you want to enter the software version display mode, press DISC 1 button. The model and destination are displayed.
4. Each time DISC 1 button is pressed, the display changes from MC version, GC version, CD version, CDDM version, CDMA version, CDMB version, BDA version, BDB version, ST version, TC version, TA version, TM version in this order, and returns to the MC version display.
5. When DISC 3 button is pressed while the version numbers are being displayed except model and destination, the date of the software creation appear. When DISC 3 button is pressed again, the display returns to the software version display. When DISC 1 button is pressed while the date of the software creation is being displayed, the date of the software creation is displayed in the same order of software version display.
6. Press DISC 2 button, the key check mode is activated.
7. In the key check mode, the fluorescent indicator tube displays "K0 J0 V0". Each time a button is pressed, "K" value increases. However, once a button has been pressed, it is no longer taken into account.
   "J" value increases in the manner of 0, 1, 2, 3 ... if JOG is turned clockwise, or it decreases in the manner of 0, 9, 8, 7 ... if JOG knob is turned counter-clockwise.
   "V" value increases in the manner of 0, 1, 2, 3 ... if VOLUME knob is turned clockwise, or it decreases in the manner of 0, 9, 8, 7 ... if VOLUME knob is turned counter-clockwise.
8. When DISC 3 button is pressed after all LEDs and segments in fluorescent indicator tube light up, the fluorescent indicator tube displays "VACS A APBB". A is VACS level which is trigger by signal level while BB is VACS level which is trigger by APVACS (Abuse Protection VACS).
9. When EX-CHANGE button is pressed after all LEDs and segments in fluorescent indicator tube light up, alternate segments in fluorescent indicator tube would light up. If you press EX-CHANGE button again, another half of altemate segments in fluorescent indicator tube would light up. Pressing EX-CHANGE button again would cause all segments lights up.
10. To release from this mode, press three buttons in the same manner as step 1, or disconnect the power cord.

[MC TEST MODE]

- This mode is used to check operations of the respective sections of Amplifier, Tuner, and Tape.

Procedure:

- To enter MC Test Mode

1. Press ■ (TAPE B) button, TUNER ENTER button and DISC 3 button simultaneously.
2. The 4 speaker symbols and CD ring indicators flash on the fluorescent indicator tube. The function is changed to VIDEO.

- Check of Amplifier

1. When ▲ button is pressed, GEQ increases to its maximum and a message "GEQ MAX" appears on the fluorescent indicator tube.
2. When ▼ button is pressed, GEQ decreases to its minimum and a message "GEQ MIN" appears on the fluorescent indicator tube.
3. When ◀ button or ▶ button is pressed, GEQ is set to flat and a message "GEQ FLAT" appears on the fluorescent indicator tube.
4. When the VOLUME knob is turned clockwise even slightly, the sound volume increases to its maximum and a message "VOLUME MAX" appears on the fluorescent indicator tube.
5. When the VOLUME knob is turned counter-clockwise even slightly, the sound volume decreases to its minimum and a message "VOLUME MIN" appears on the fluorescent indicator tube.

- Tape function

1. When a tape is inserted in Deck B and recording is started, the function is changed to VIDEO automatically. When CD SYNC button is pressed during recording in function, ALC (Automatic Logic Control) is turned on.
2. During recording, press ⏮ ◀◀ (TAPE B) button will stop the recording and the function is changed to TAPE B and rewind the tape in Deck B until the recording start position and playback of the tape B is started. If the REC PAUSE/START button is pressed for a pause and pressed again to resume recording during recording time, when the tape is rewind, the tape will be rewind until the position where the pause is applied.

- AMS Test Mode

1. Select the function "TAPE A" or "TAPE B".
2. Select Loop or Relay direction mode by pressing the DIRECTION button. Insert a test tape AMS-110A or AMS-120 to selected tape deck.
3. Press the AMP MENU button to enter the AMS test mode.
4. After the test tape is rewind to the beginning of the tape, the AMS+ is checked, and the mechanism is shut off after detecting the AMS signal twice.
5. Then the AMS– is checked and the mechanism is shut off after detecting the AMS signal twice.
6. When the check is complete, a message of either OK or NG appears on the fluorescent indicator tube.

- To release from MC Test mode

1. To release from this mode, press I/⏻ button.
2. The cold reset is enforced at the same time.

[COLD RESET]

- The cold reset clears all data including preset data stored in the RAM to initial conditions. Execute this mode when returning the set to the customer.

Procedure:

1. Press ■ (TAPE B) button, TUNER ENTER button, and I/⏻ button simultaneously.
2. The fluorescent indicator tube becomes blank for a while, and the set is reset.

[VACS ON/OFF]

- This mode is used to switch ON and OFF the VACS (Variable Attenuation Control System).

Procedure:

1. Press I/⏻ button to turn the set ON.
2. Press PLAY MODE button and I/⏻ button simultaneously. The message "VACS OFF" or "VACS ON" appears on the fluorescent indicator tube.

[TUNER STEP CHANGE]

- The step interval of AM channels can be toggled between 9 kHz and 10 kHz.

Procedure:

1. Press I/⏻ button to turn the set ON.
2. Press TUNER BAND button to select the "AM".
3. Press I/⏻ button to turn the set OFF.
4. Press TUNER ENTER button and I/⏻ button simultaneously. The system will turn ON automatically. The message "AM 9k STEP" or "AM 10k STEP" appears on the fluorescent indicator tube and thus the channel step is changed.

[CD SERVICE MODE]

- This mode let you move the CD sled motor freely. Use this mode when you want to clean the optical pick-up.

Procedure:

1. Press I/⏻ button to turn the set ON.
2. Select CD function.
3. Press ■ (TAPE B) button, TUNER ENTER button, and DISC 5 button simultaneously.
4. The CD service mode is activated. The message "SERVICE MODE" appears on the fluorescent indicator tube.
5. With the CD in stop status, press ▶▶ (CD) button to move the optical pick-up to outside track, or press ◀◀ (CD) button to move to inside track. The message "SLED OUT" or "SLED IN" appears on the fluorescent indicator tube.
6. To turn on or off the laser, press PLAY MODE button. The message "LASER ON" or "LASER OFF" appears on the fluorescent indicator tube.
7. To release from this mode, press I/⏻ button.

[AGING MODE]

- This mode can be used for operation check of CD section.
  If an error occurs, the aging operation would stops and the status is displayed.
  If there were no error occurs, the aging operation would continue repeatedly.

Procedure:

1. Press I/⏻ button to turn the set ON.
2. Select CD function.
3. Load five discs on the disc tray.
4. Press PLAY MODE button to select the "ALL DISCS" mode, and press the REPEAT button to select "REPEAT OFF" mode.
5. Press ■ (TAPE B) button, TUNER ENTER button, and DISC 4 button simultaneously.
6. Aging operation is started.
7. To release from this mode, press I/⏻ button or disconnect the power cord to turn the power OFF.

Aging mode sequence:

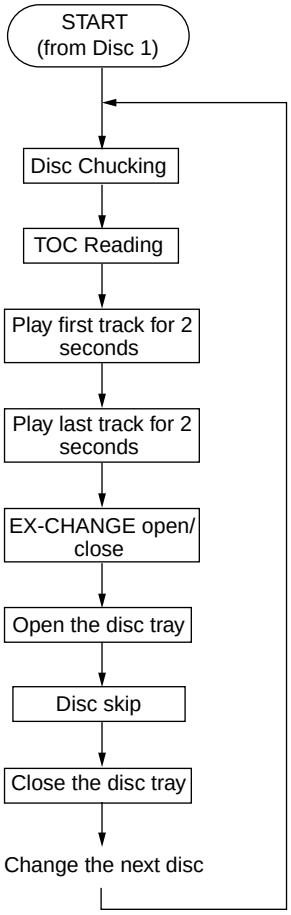

- Display when an error occurred (CD Error Code Mode)

Procedure:
1. Press ■ (TAPE B) button, TUNER ENTER button and DISC SKIP button simultaneously to enter the error code display mode.
2. The fluorescent indicator tube displays the number of total error.
3. Each time ▶▶ (CD) button or ◀◀ (CD) button is pressed, display change as below.

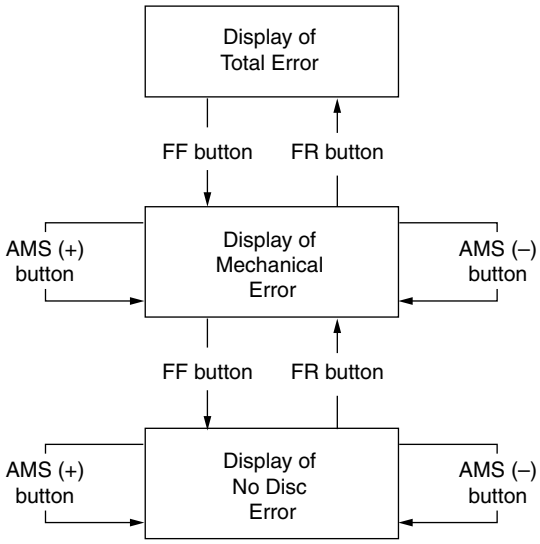

4. To clear the error record, operate the cold reset. (Refer to the "MC COLD RESET")
5. To release from this mode, press the I/⏻ button or disconnect the power plug to turn the power OFF.

- Display of total error

Em **Ed**

Em**: The number of mechanical errors.
Ed**: The number of no disc errors after chucking the disc.

- Display of mechanical errors

M*$$%%&&##00

M*: The number of mechanical error ("00" is latest one)
(Press ▶▶I (CD) button or I◀◀ (CD) button to display next error)
$$: Not used
%%: Loading related error (Second figure is not used)
- D: Stop by the problem other than mechanical problem while closing.
- E: Stop by the problem other than mechanical problem while opening.
- C: Stop by the problem other than mechanical problem while chucking up.
- F: Stop by the problem other than mechanical problem while chucking down.

&&: Emerging error
- 01: Stop while chucking up.
- 02: Stop while chucking up.
- 03: Time-out of EX-CHANGE open.
- 05: Time-out of EX-CHANGE close.

##: Not used

- Display of no disc errors

D*$$%%&&##00

D*: The number of no disc error ("00" is latest one)
(Press ▶▶I (CD) button or I◀◀ (CD) button to display next error)
$$: Error type
- 01: Focus error
- 02: GFS error
- 03: Setup error

%%: Not used
&&:
- 00: No disc judgment without chucking retry.
- 01: No disc judgment after chucking retry.

##: The state when judged as no disc
- 01: Stop
- 02: Setup
- 03: TOC reading
- 04: Access
- 05: Playback
- 06: Pause
- 07: Manual search (Play)
- 08: Manual search (Pause)

[CD REPEAT 5 LIMIT OFF MODE]

- The number of repeat for CD playback is 5 times when the repeat mode is "REPEAT ALL". This mode enables CD to repeat playback for limitless times.

Procedure:
1. Press I/⏻ button to turn the set ON.
2. Select CD function.
3. Press ■ (TAPE B) button, TUNER ENTER button and REPEAT button simultaneously to enter the CD repeat 5 limit off mode and the fluorescent indicator tube displays "LIMIT OFF".

- To release from this mode, operate the cold reset. (Refer to the "MC COLD RESET")

[CD SHIP MODE (WITH MEMORY CLEAR)]

- This mode moves the optical pick-up to the position durable to vibration and clears all data including preset data stored in the RAM to initial conditions. Use this mode when returning the set to the customer after repair.

Procedure:
1. Press I/⏻ button to turn the set ON.
2. Select CD function.
3. Press EXCHANGE button and I/⏻ button simultaneously. The set will power off automatically.
4. After the "STANDBY" blinking display finish, a message "LOCK" is displayed on the fluorescent indicator tube and the CD ship mode is set.

[CD SHIP MODE (WITHOUT MEMORY CLEAR)]

- This mode moves the optical pick-up to the position durable to vibration. Use this mode when returning the set to the customer after repair.

Procedure:

1. Press I/⏻ button to turn the set ON.
2. Select CD function.
3. Press REPEAT button and I/⏻ button simultaneously. The set will power off automatically.
4. After the "STANDBY" blinking display finish, a message "LOCK" is displayed on the fluorescent indicator tube and the CD ship mode is set.

[CD POWER MANAGE]

- This mode let you switch on or off power supply to the BU during TUNER function.

- When CD POWER is set to OFF, the power supply to the BU is cut off during TUNER function. It will increase the time taken to access CD when function change from TUNER to CD but it will improve tuner reception.

- When CD POWER is set to ON, the power supply to the BU is not cut off during TUNER function. It will reduce the time taken to access CD when function change from TUNER to CD but it will decrease tuner reception performance.

Procedure:

1. Press I/⏻ button to turn the set ON.
2. Select CD function.
3. Press I/⏻ button to turn the set OFF.
4. Press ■ (CD) button and I/⏻ button simultaneously. The set will power on automatically.
5. The message "CD POWER ON" or "CD POWER OFF" will be displayed on the fluorescent indicator tube.

[CD TRAY LOCK MODE]

- This mode let you lock the disc tray. When this mode is activated, the disc tray will not open when OPEN/CLOSE button or EX-CHANGE button is pressed. The message "LOCKED" will be displayed in on the fluorescent indicator tube.

Procedure:

1. Press I/⏻ button to turn the set ON.
2. Select CD function.
3. Press ■ (CD) button and OPEN/CLOSE button simultaneously and hold down until "LOCKED" or "UNLOCKED" displayed on the fluorescent indicator tube (around 5 seconds).

[VIDEO/MD SWITCHING]

- This mode let you switch from VIDEO to MD and vice-versa.

Procedure:

1. During Power Off, press FUNCTION button and I/⏻ button simultaneously. The set power on automatically and the function will changed to MD. Do the same procedures again to change from MD to VIDEO.

SECTION 5
MECHANICAL ADJUSTMENTS

Precaution

1. Clean the following parts with a denatured alcohol-moistened swab:
   record/playback heads — pinch rollers
   erase head — rubber belts
   capstan — idlers
2. Demagnetize the record/playback head with a head demagnetizer.
3. Do not use a magnetized screwdriver for the adjustments.
4. After the adjustments, apply suitable locking compound to the parts adjusted.
5. The adjustments should be performed with the rated power supply voltage unless otherwise noted.

Torque Measurement

Mode	Torque Meter	Meter Reading
FWD	CQ-102C	2.9 – 6.9 mN • m (30 to 70 g • cm) (0.42 – 0.97 oz • inch)
FWD back tension		0.19 – 0.59 mN • m (2 to 6 g • cm) (0.03 – 0.08 oz • inch)
FF/REW	CQ-201B	7.8 – 16.7 mN • m (80 to 170 g • cm) (1.11 – 2.36 oz • inch)

SECTION 6
ELECTRICAL ADJUSTMENTS

DECK SECTION 0 dB=0.775 V

Precaution

1. Demagnetize the record/playback head with a head demagnetizer.
2. Do not use a magnetized screwdriver for the adjustments.
3. After the adjustments, apply suitable locking compound to the parts adjust.
4. The adjustments should be performed with the rated power supply voltage unless otherwise noted.
5. The adjustments should be performed in the order given in this service manual. (As a general rule, playback circuit adjustment should be completed before performing recording circuit adjustment.)
6. The adjustments should be performed for both L-CH and R-CH.
7. Switches and controls should be set as follows unless otherwise specified.
8. Set to the test mode.
   (1) Press the I/⏻ button to turn the power ON.
   (2) Select the function “TAPE A or B”.
   (3) Press the button of ■ (TC-B), TUNER ENTER, and DISC 3 simultaneously, to set the tape deck test mode and displays “TEST MODE” on the fluorescent indicator tube.
   (4) To release from the test mode, press the I/⏻ button.

• Test Tape

Tape	Signal	Used for
P-4-A100	10 kHz, –10 dB	Azimuth Adjustment
WS-48B	3 kHz, 0 dB	Tape Speed Adjustment

Record/Playback Head Azimuth Adjustment

DECK A **DECK B**

Note: Perform this adjustments for both decks

Procedure:

1. Mode: Playback (FWD)

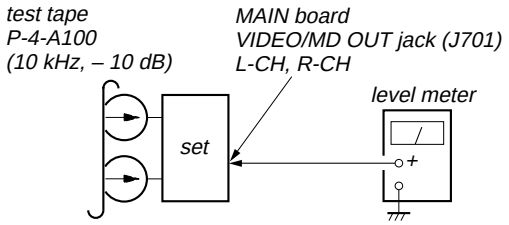

2. Turn the adjustment screw and check output peaks. If the peaks do not match for L-CH and R-CH, turn the adjustment screw so that outputs match within 1dB of peak.

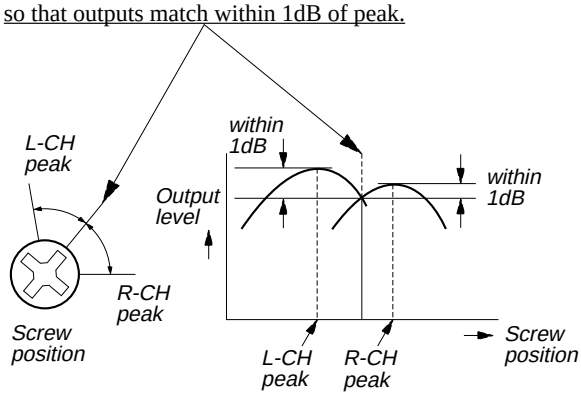

3. Mode: Playback

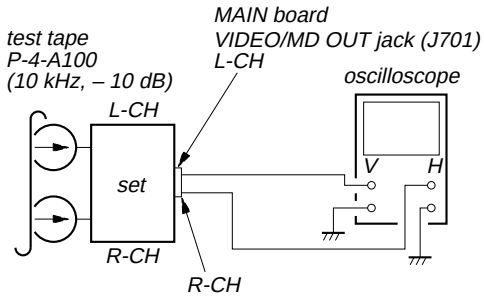

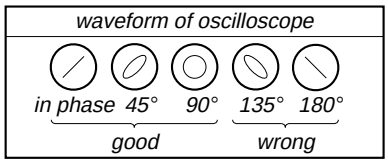

4. Repeat step 1 to 3 in playback (REV) mode.
5. After the adjustments, apply suitable locking compound to the pats adjusted.

Adjustment Location: Playback Head (Deck A).
Record/Playback/Erase Head (Deck B).

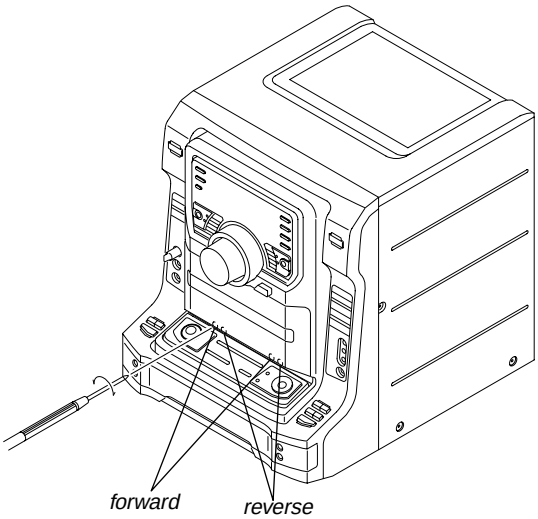

CD SECTION

Note:
1. CD Block is basically designed to operate without adjustment. Therefore, check each item in order given.
2. Use YEDS-18 (3-702-101-01) unless otherwise indicated.
3. Use an oscilloscope with more than 10M impedance.
4. Clean the object lens by an applicator with neutral detergent when the signal level is low than specified value with the following checks.

S-Curve Check

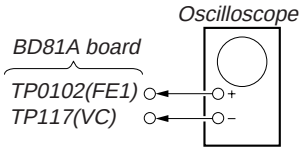

Procedure:
1. Connect oscilloscope to TP102 (FE1) and TP117 (VC).
2. Press the I/⏻ button to turn the power ON.
3. Load a disc (YEDS-18) and actuate the focus search. (In consequence of open and close the disc tray, actuate the focus search)
4. Confirm that the oscilloscope waveform (S-curve) is symmetrical between A and B. And confirm peak to peak level within 3 ±0.5 Vp-p.

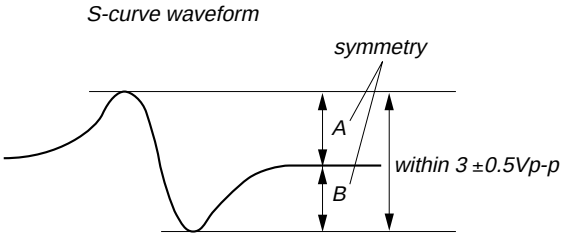

Note: • Try to measure several times to make sure than the ratio of A : B or B : A is more than 10 : 7.
• Take sweep time as long as possible and light up the brightness to obtain best waveform.

RF Level Check

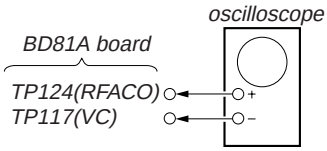

Procedure:
1. Connect oscilloscope to TP124 (RFACO) and TP117 (VC).
2. Press the I/⏻ button to turn the power ON.
3. Load a disc (YEDS-18) and playback.
4. Confirm that oscilloscope waveform is clear and check RFAC signal level is correct or not.

Note: Clear RF signal waveform means that the shape "◊" can be clearly distinguished at the center of the waveform.

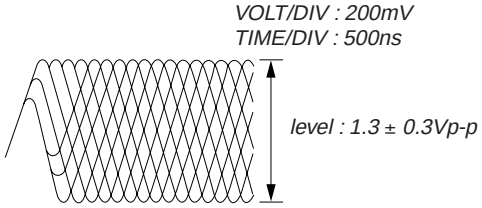

Checking Location:

【BD81A BOARD】(SIDE B)

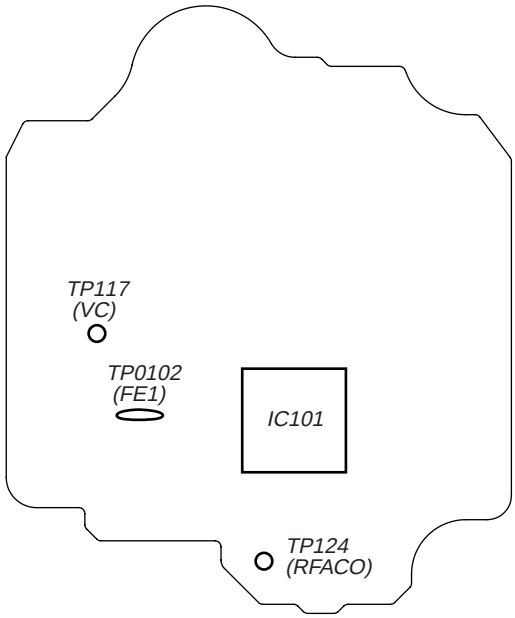

SECTION 7
DIAGRAMS

7-1. CIRCUIT BOARDS LOCATION

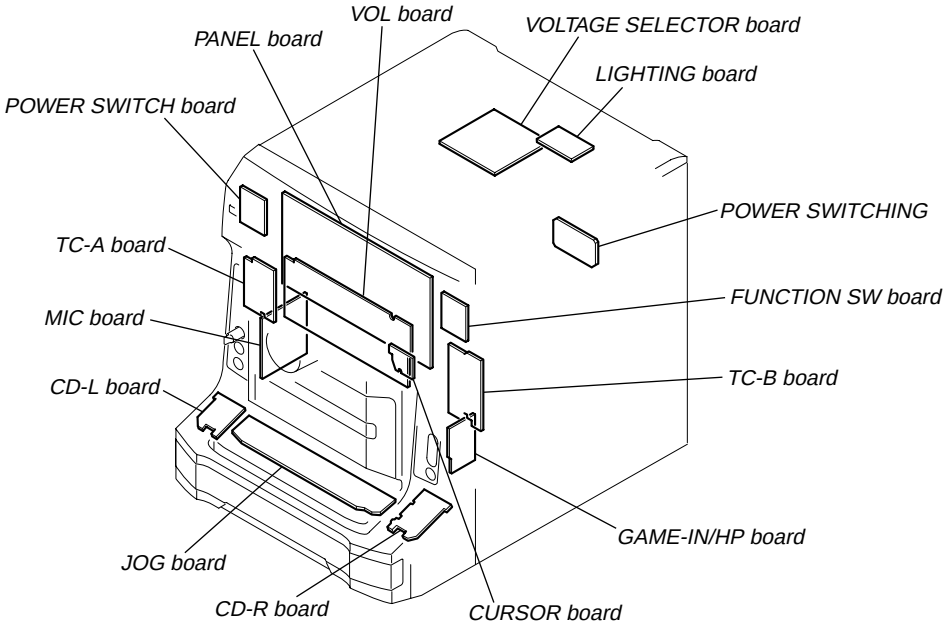

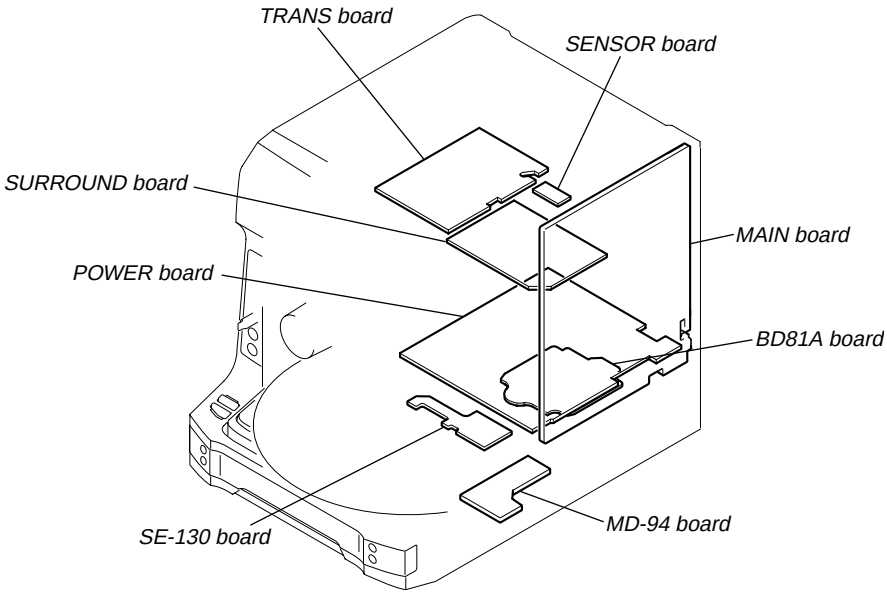

7-2. BLOCK DIAGRAM — CD SERVO SECTION —

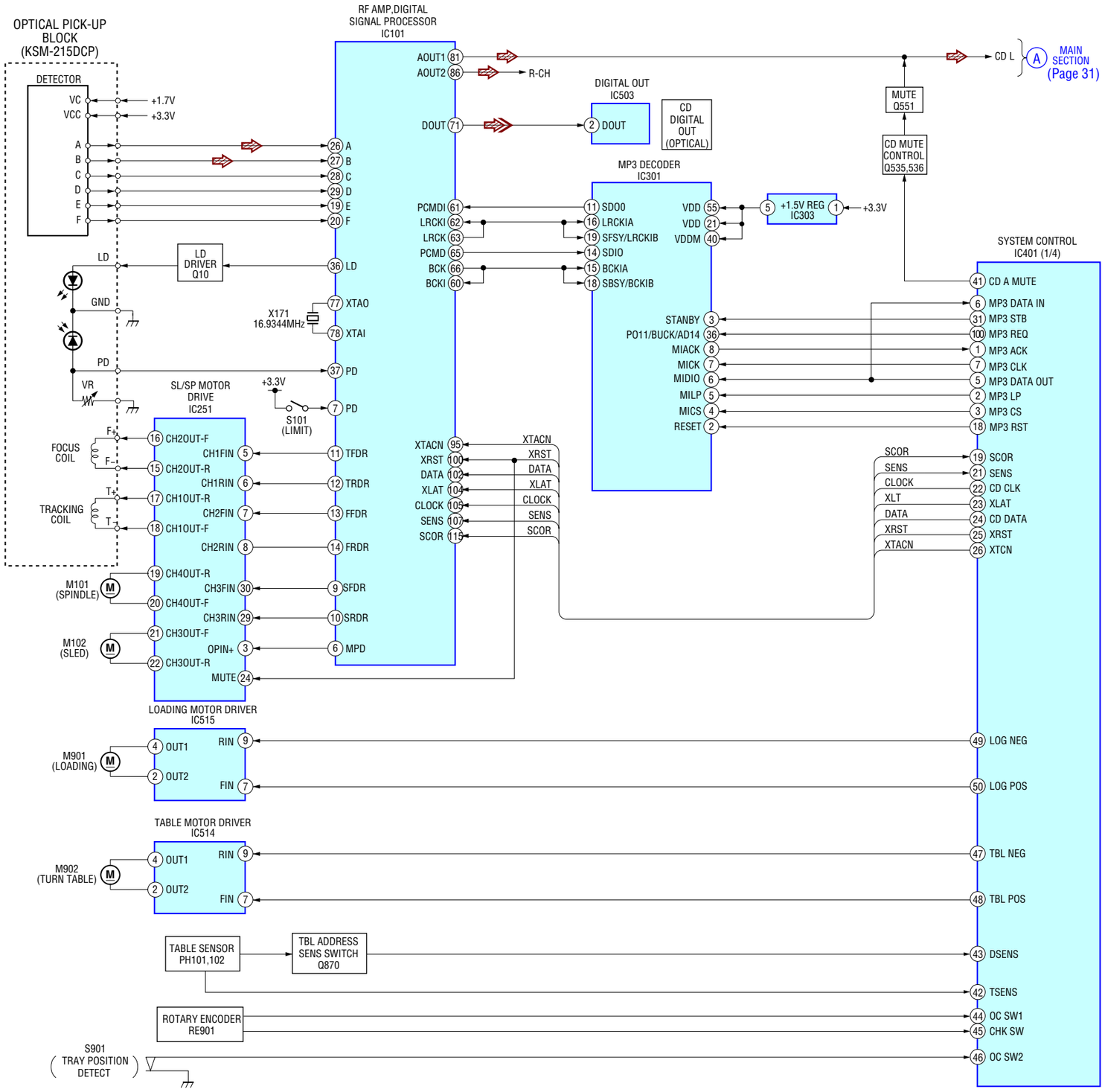

- R-ch is omitted due to same as L-ch.
- SIGNAL PATH
  - ⇨ : CD PLAY(ANALOG OUT)
  - ⇨⇨ : CD PLAY(DIGITAL OUT)

7-3. BLOCK DIAGRAM — TUNER/TAPE DECK SECTION —

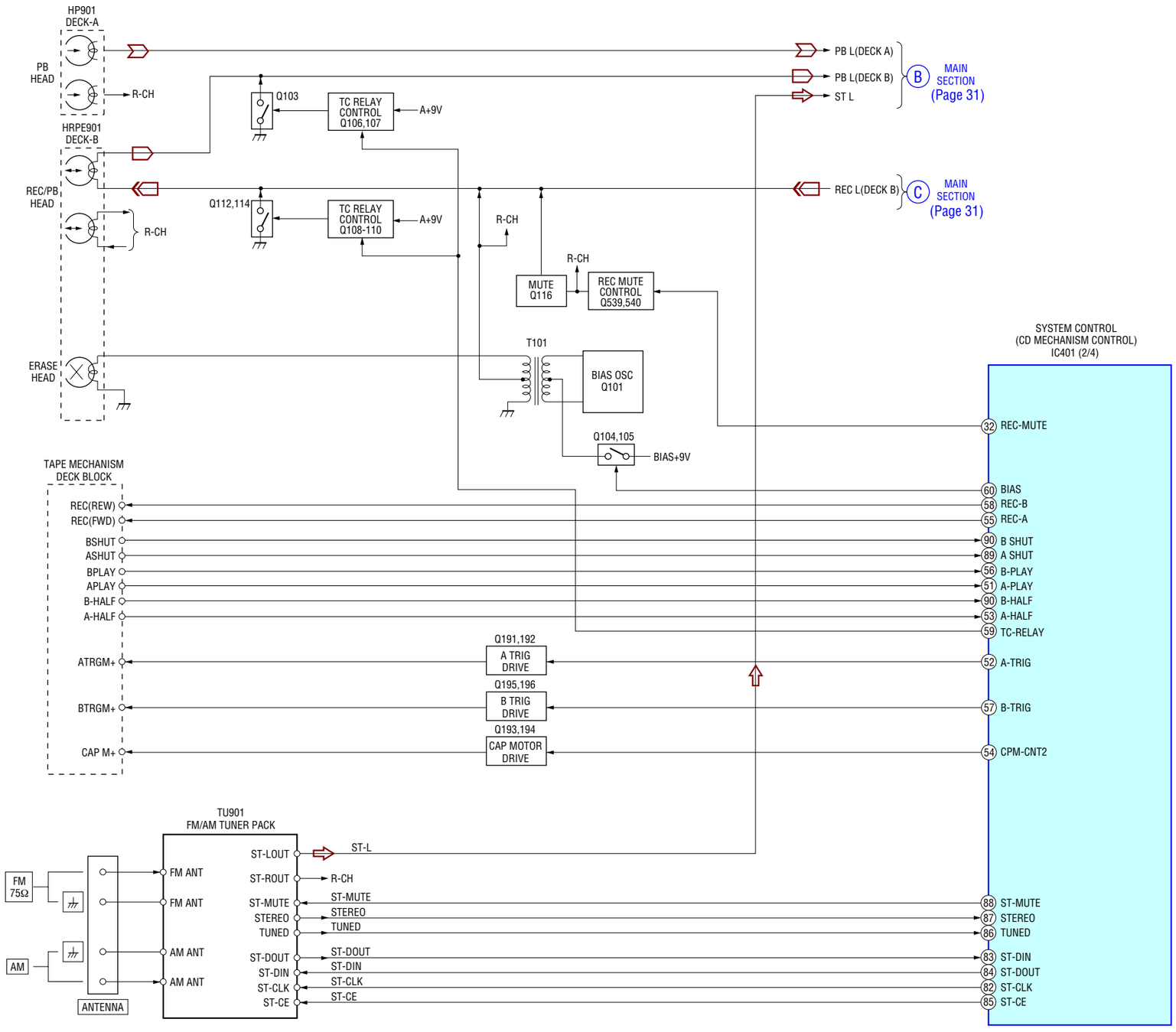

- R-ch is omitted due to same as L-ch.
- SIGNAL PATH
  - : TUNER(FM/AM)
  - : PLAYBACK(DECK A)
  - : PLAYBACK(DECK B)
  - : RECORD

7-4. BLOCK DIAGRAM — MAIN SECTION —

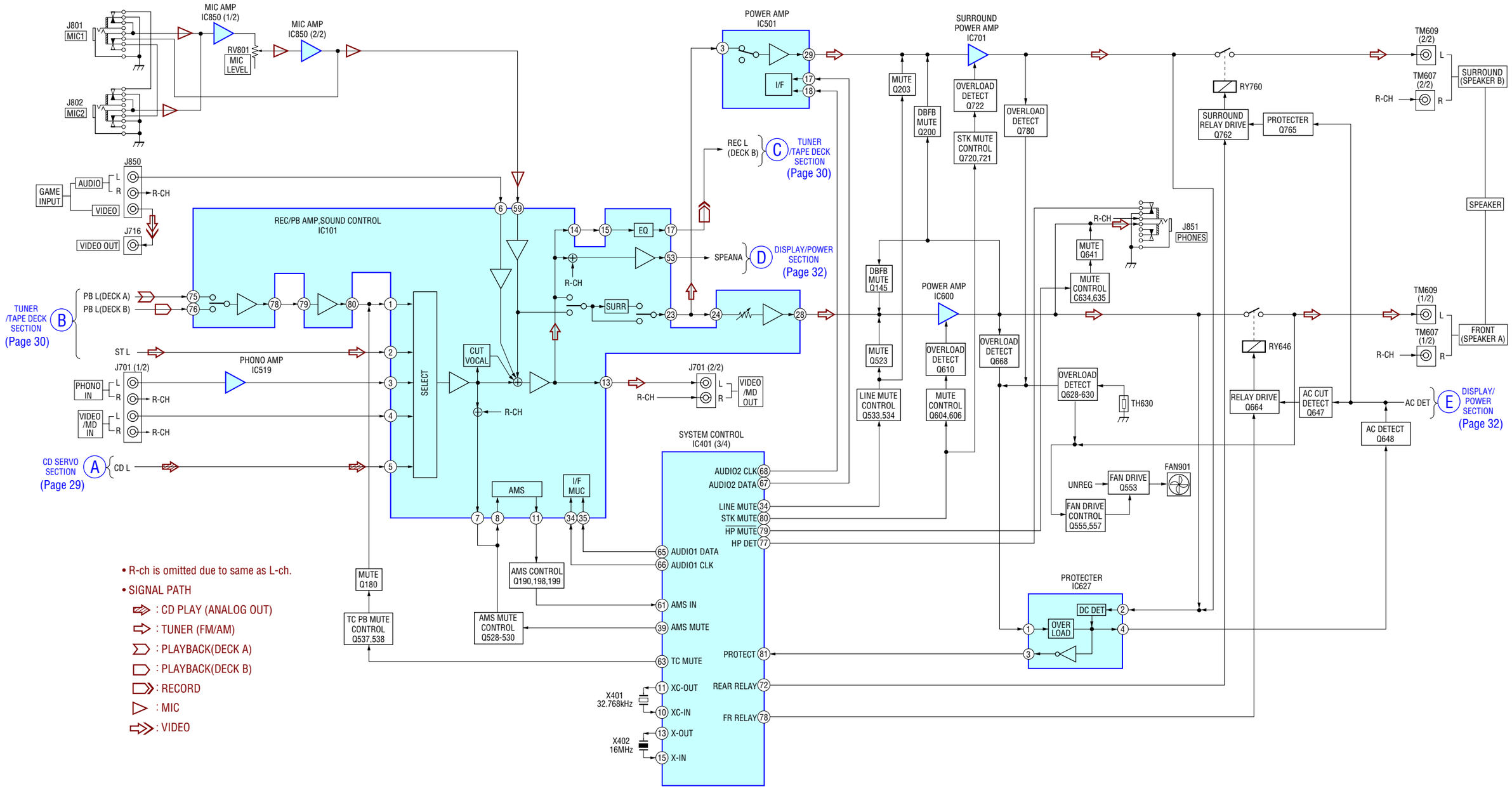

7-5. BLOCK DIAGRAM — DISPLAY/POWER SECTION —

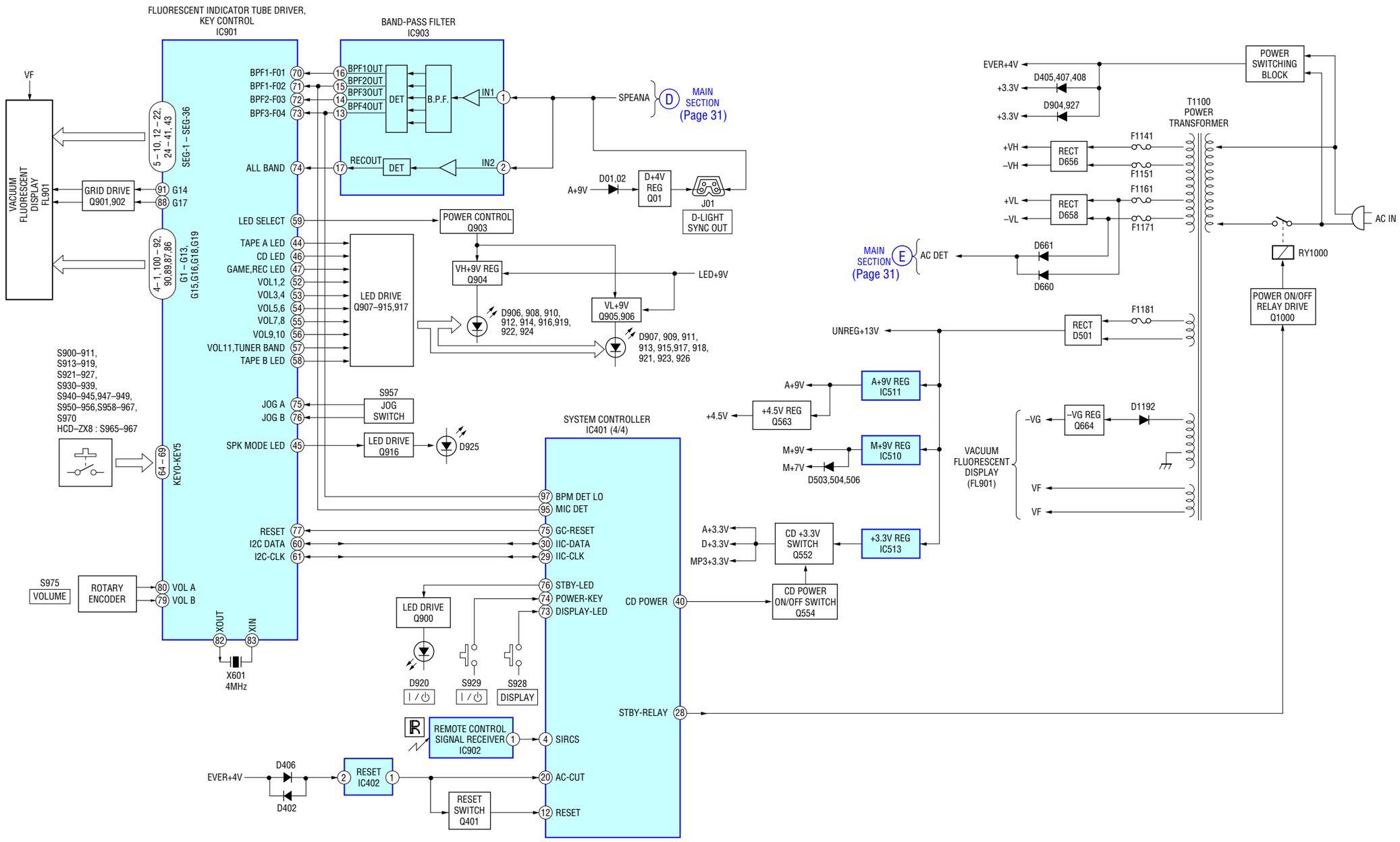

• NOTE FOR PRINTED WIRING BOARDS AND SCHEMATIC DIAGRAMS

Note on Printed Wiring Board:

- ○——— : parts extracted from the component side.
- ——— : parts extracted from the conductor side.
- ▬ : Pattern from the side which enables seeing.
  (The other layer's patterns are not indicated.)

Caution:	
Pattern face side: (Conductor Side)	Parts on the pattern face side seen from the pattern face are indicated.
Parts face side: (Component Side)	Parts on the parts face side seen from the parts face are indicated.

- Indication of transistor.

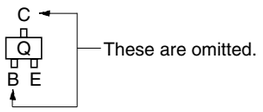

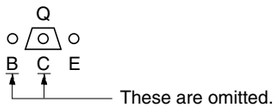

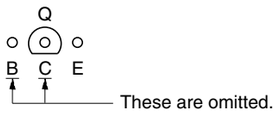

- Abbreviation
  MX : Mexican model.

UNLEADED SOLDER

Boards requiring use of unleaded solder are printed with the lead free mark (LF) indicating the solder contains no lead.
(Caution: Some printed circuit boards may not come printed with the lead free mark due to their particular size)

: LEAD FREE MARK

Unleaded solder has the following characteristics.

- Unleaded solder melts at a temperature about 40 °C higher than ordinary solder.
  Ordinary soldering irons can be used but the iron tip has to be applied to the solder joint for a slightly longer time.
  Soldering irons using a temperature regulator should be set to about 350 °C.
  Caution: The printed pattern (copper foil) may peel away if the heated tip is applied for too long, so be careful!
- Strong viscosity
  Unleaded solder is more viscou-s (sticky, less prone to flow) than ordinary solder so use caution not to let solder bridges occur such as on IC pins, etc.
- Usable with ordinary solder
  It is best to use only unleaded solder but unleaded solder may also be added to ordinary solder.

Note on Schematic Diagram:

- All capacitors are in μF unless otherwise noted. (p: pF) 50 WV or less are not indicated except for electrolytics and tantalums.
- All resistors are in Ω and 1/4 W or less unless otherwise specified.
- : nonflammable resistor.
- : panel designation.

Note: The components identified by mark ⚠ or dotted line with mark ⚠ are critical for safety.
Replace only with part number specified.

- ▬▬ : B+ Line.
- ▬ ▬ ▬ : B– Line.
- Voltage and waveforms are dc with respect to ground under no-signal (detuned) conditions.
  no mark : FM
  < > : CD PLAY
  ∗ : Impossible to measure
- Voltages are taken with a VOM (Input impedance 10 MΩ). Voltage variations may be noted due to normal production tolerances.
- Waveforms are taken with a oscilloscope. Voltage variations may be noted due to normal production tolerances.
- Circled numbers refer to waveforms.
- Signal path.
  : AUDIO
  : VIDEO
  : TUNER
  : TAPE PLAY (DECK A)
  : TAPE PLAY (DECK B)
  : TAPE REC (DECK B)
  : CD PLAY (ANALOG OUT)
  : CD PLAY (DIGITAL OUT)
- Abbreviation
  MX : Mexican model.

• WAVEFORMS

— MAIN Board —

① IC401 ⑪ (XC-OUT)

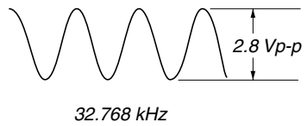

1 V/DIV, 0.1 μs/DIV

② IC401 ⑬ (X-OUT)

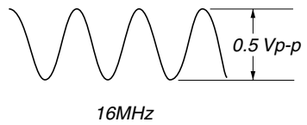

0.5 V/DIV, 0.1 μs/DIV

— PANEL Board —

① IC901 ㉒ (X OUT)

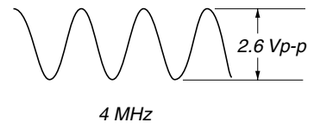

1 V/DIV, 0.1 μs/DIV

7-6. PRINTED WIRING BOARD — BD SECTION — • Refer to page 28 for Circuit Boards Location. : Uses unleaded solder.

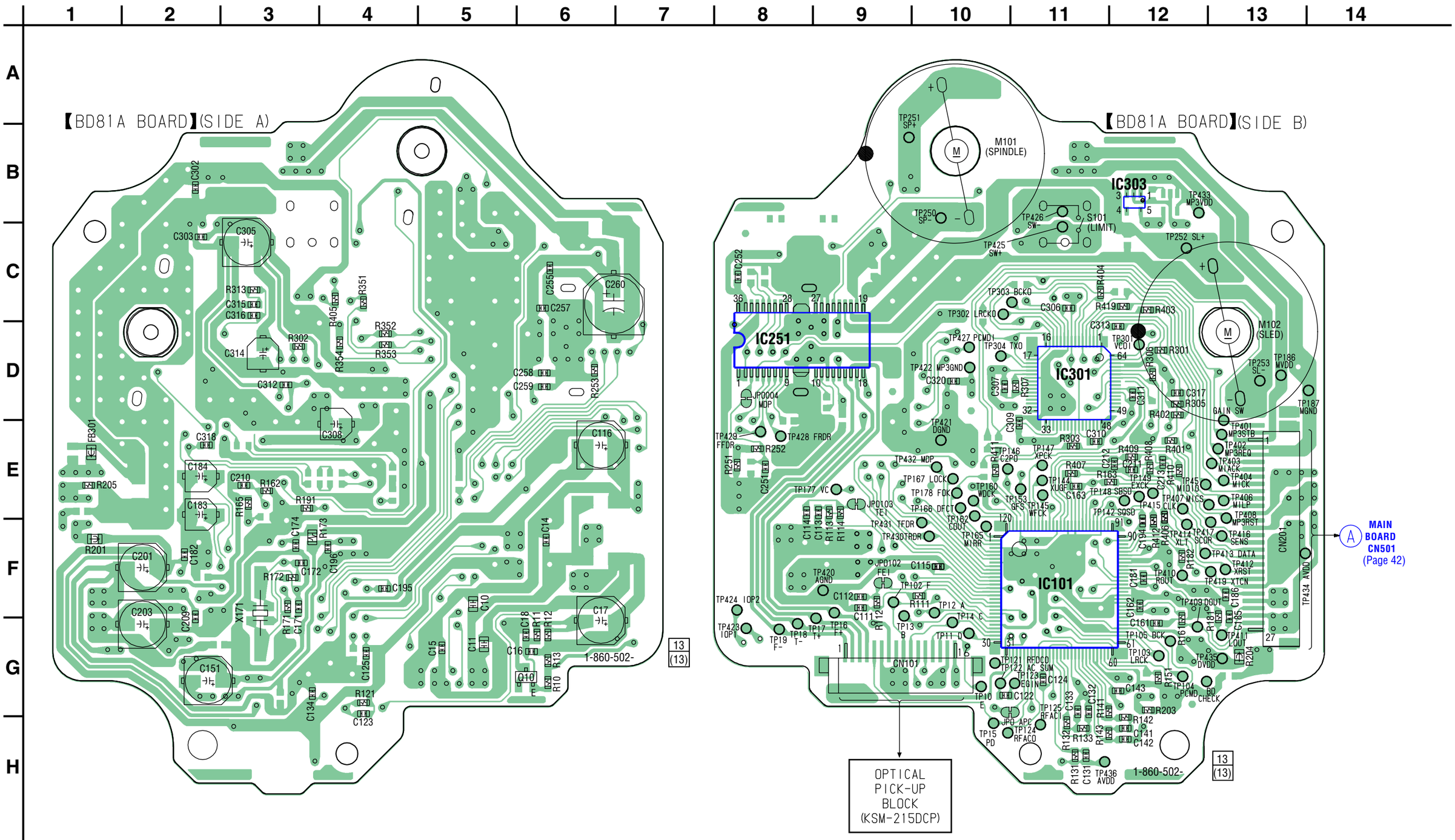

• **Semiconductor Location**

Ref. No.	Location
IC101	F-11
IC251	D-8
IC301	D-11
IC303	B-12
Q10	G-6

7-7. SCHEMATIC DIAGRAM — BD SECTION —

- Refer to page 61 for IC Block Diagrams.
- Refer to page 63 for IC Pin Description of IC101.

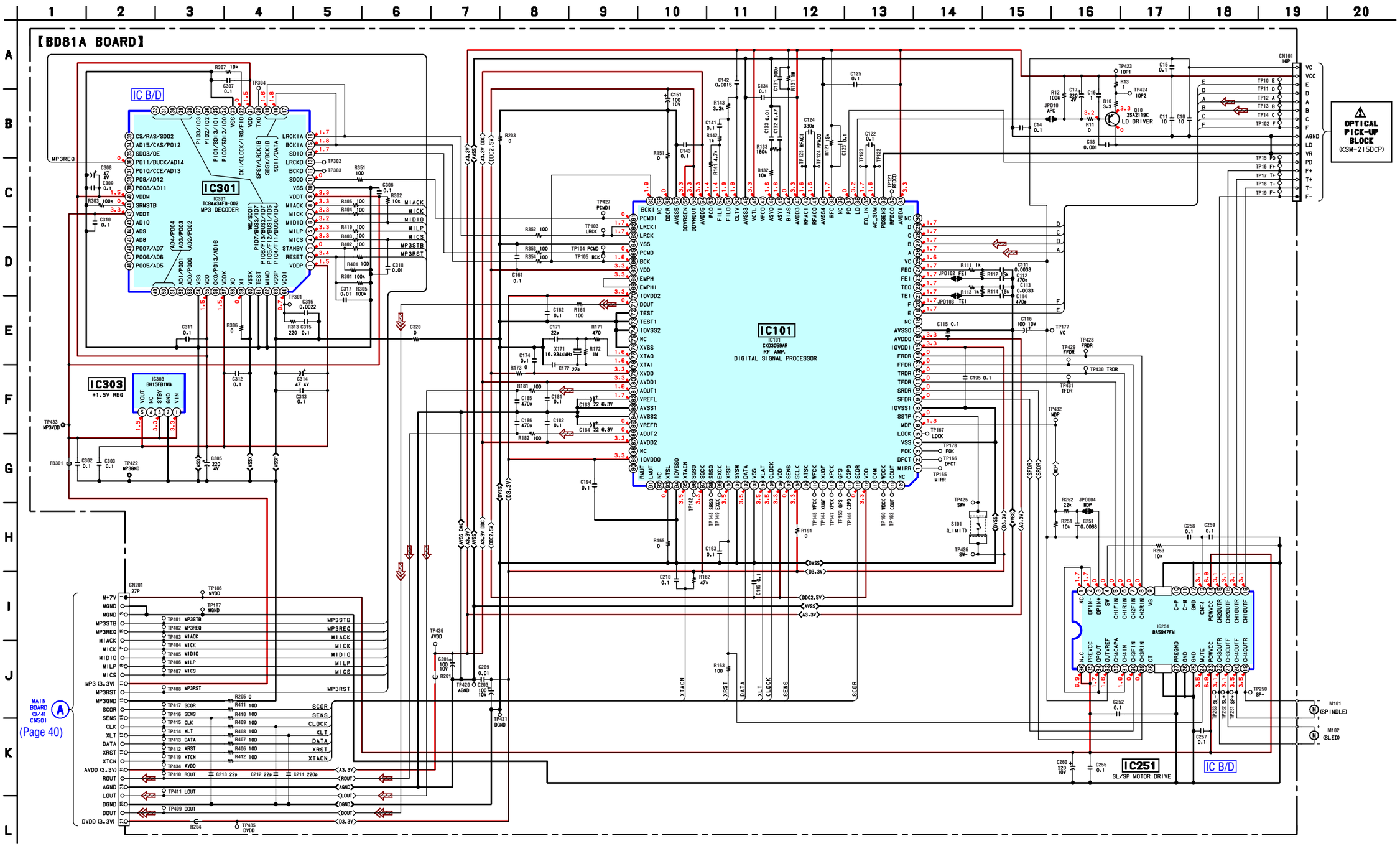

7-8. PRINTED WIRING BOARDS — LOADING SECTION — • Refer to page 28 for Circuit Boards Location. : Uses unleaded solder.

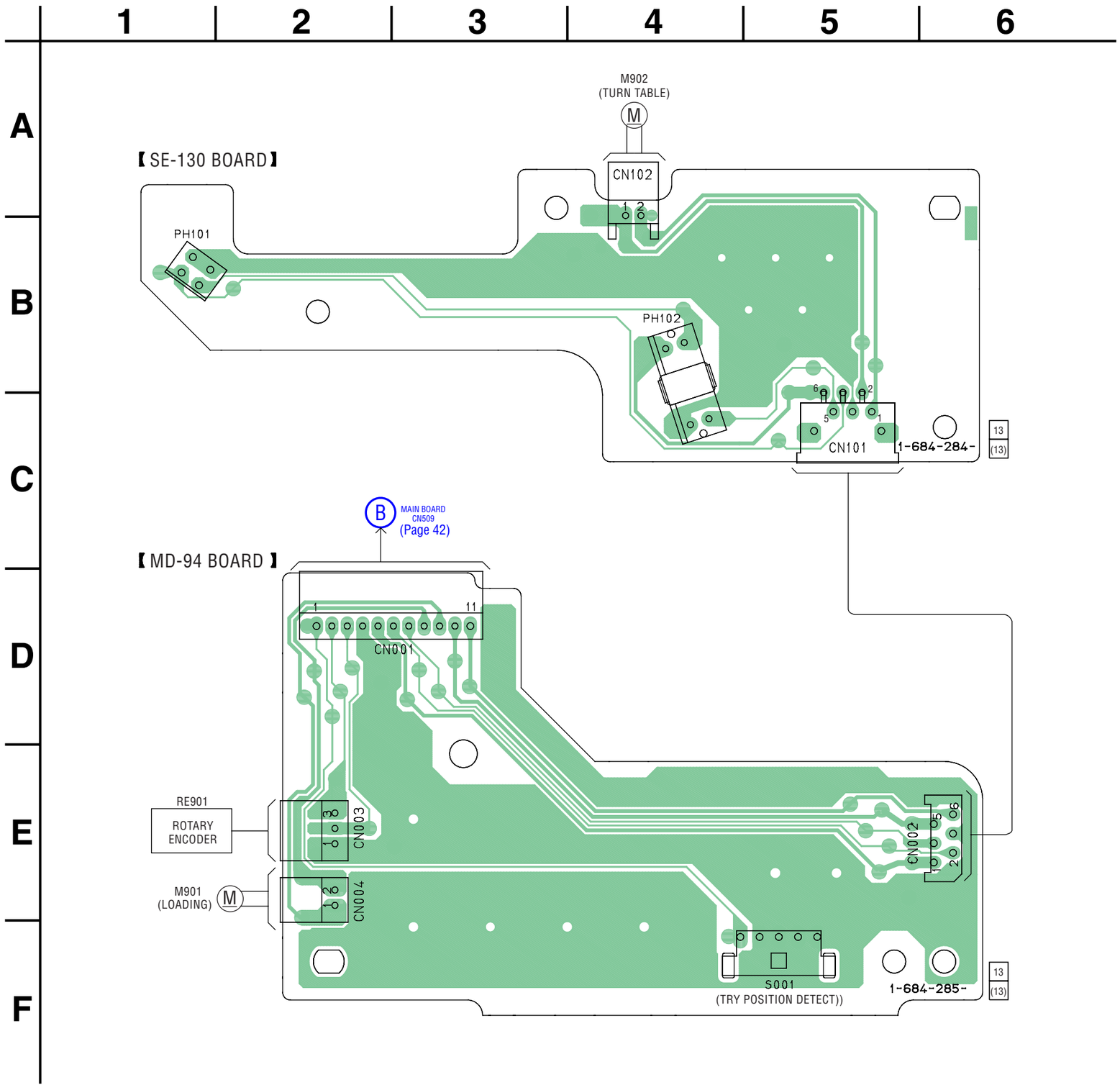

7-9. SCHEMATIC DIAGRAM — LOADING SECTION —

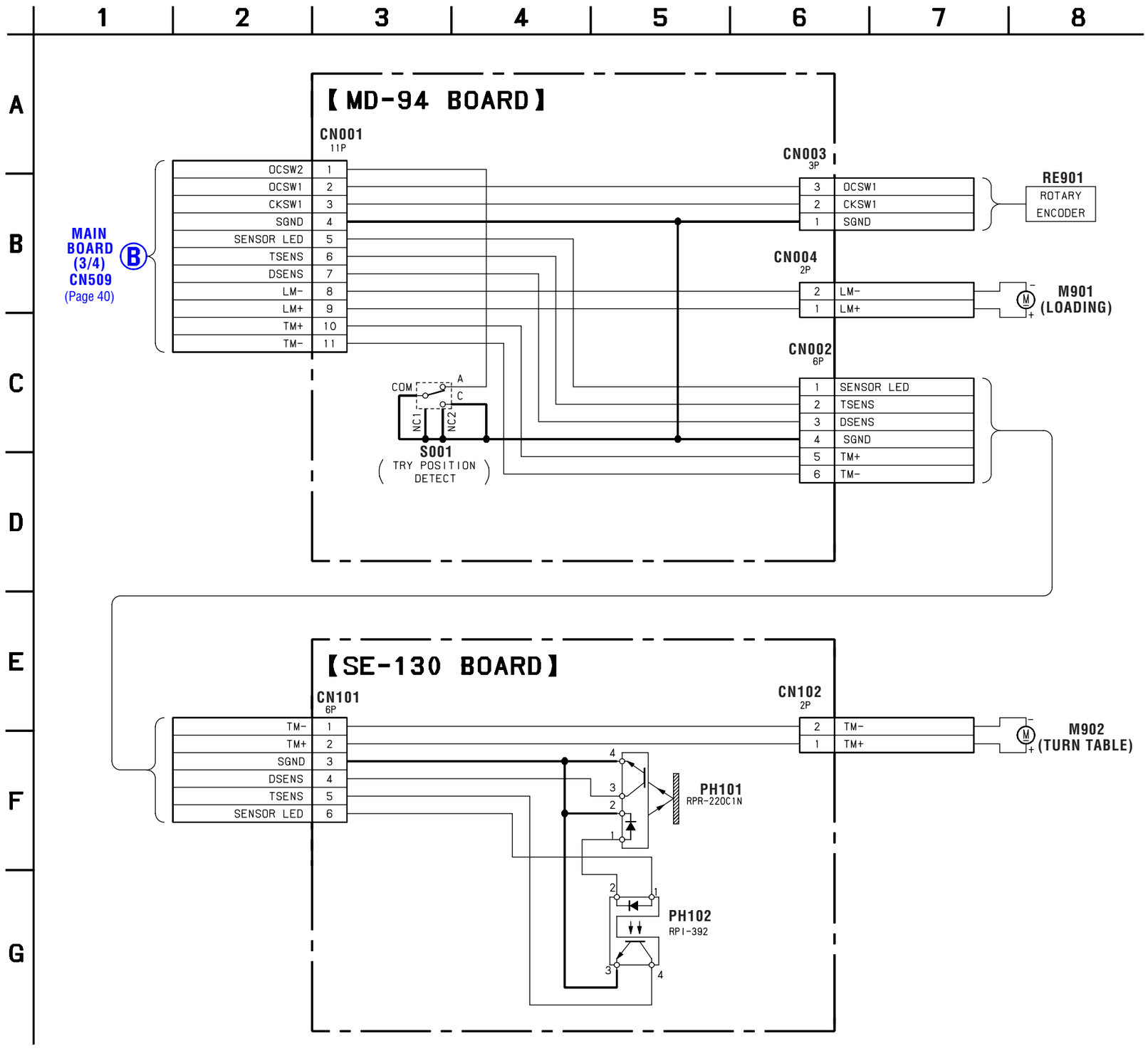

7-10. SCHEMATIC DIAGRAM — MAIN SECTION (1/4) —

- Refer to page 33 for Waveforms.
- Refer to page 66 for IC Pin Description of IC401.

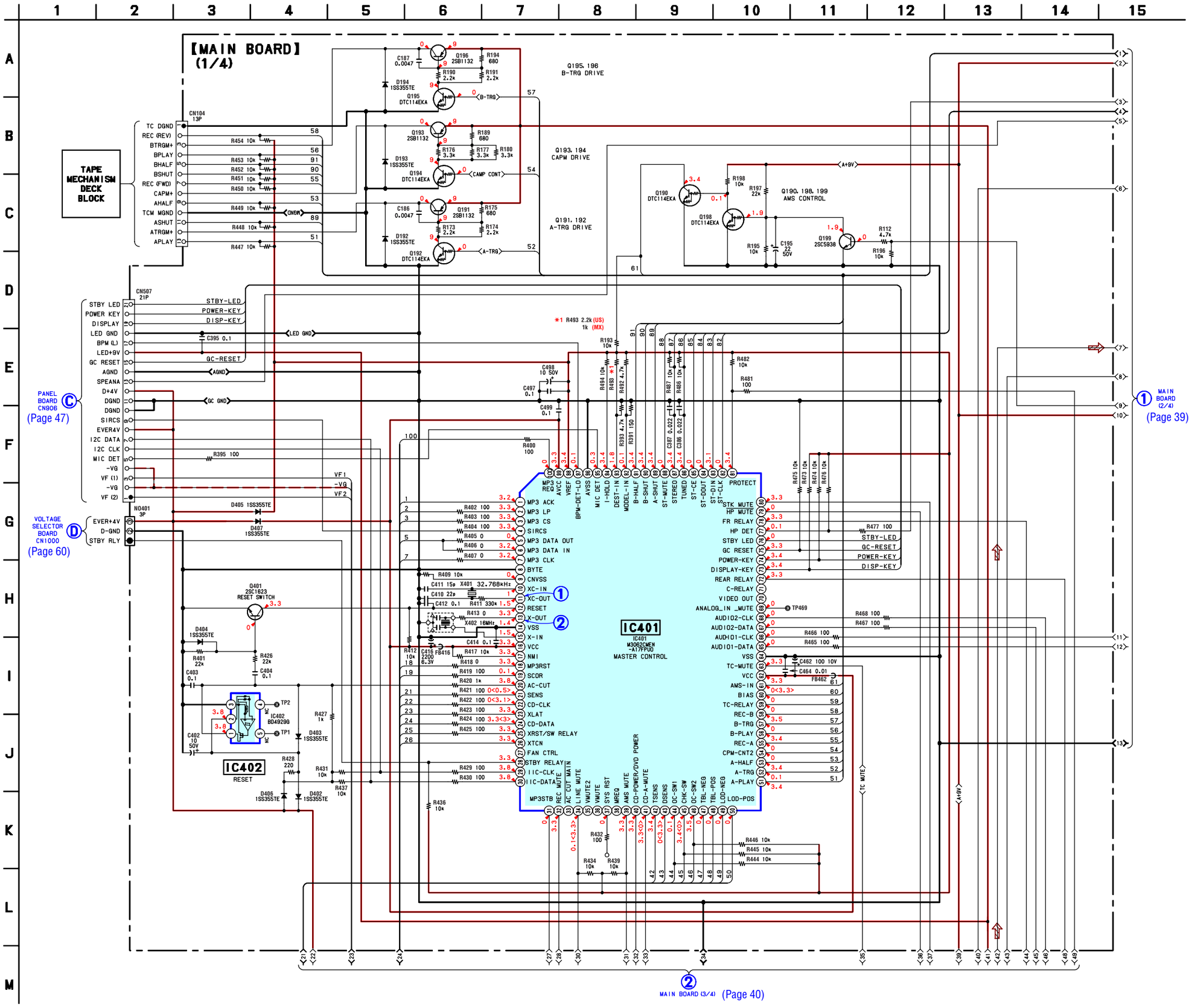

7-11. SCHEMATIC DIAGRAM — MAIN SECTION (2/4) —

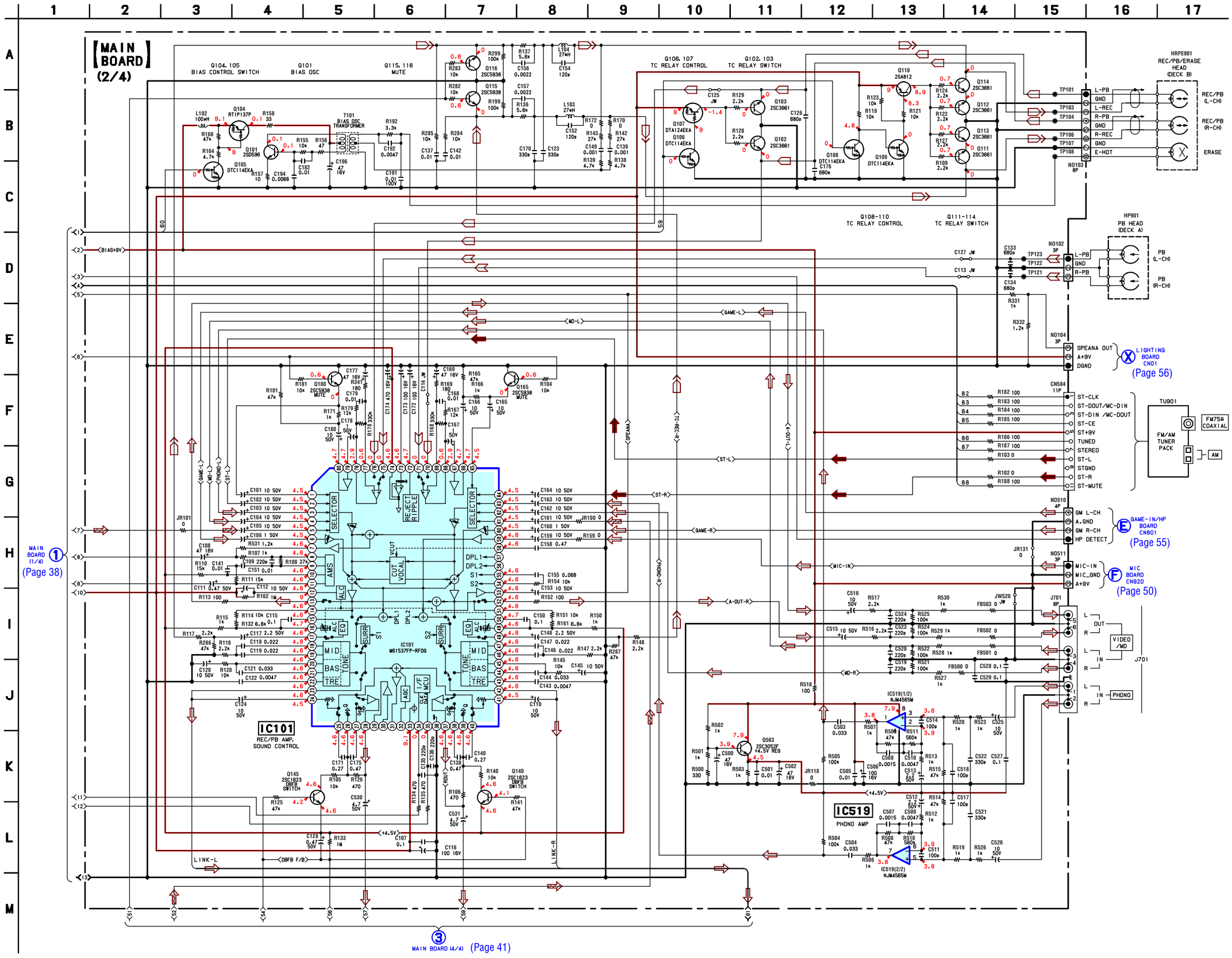

7-12. SCHEMATIC DIAGRAM — MAIN SECTION (3/4) — • Refer to page 62 for IC Block Diagrams.

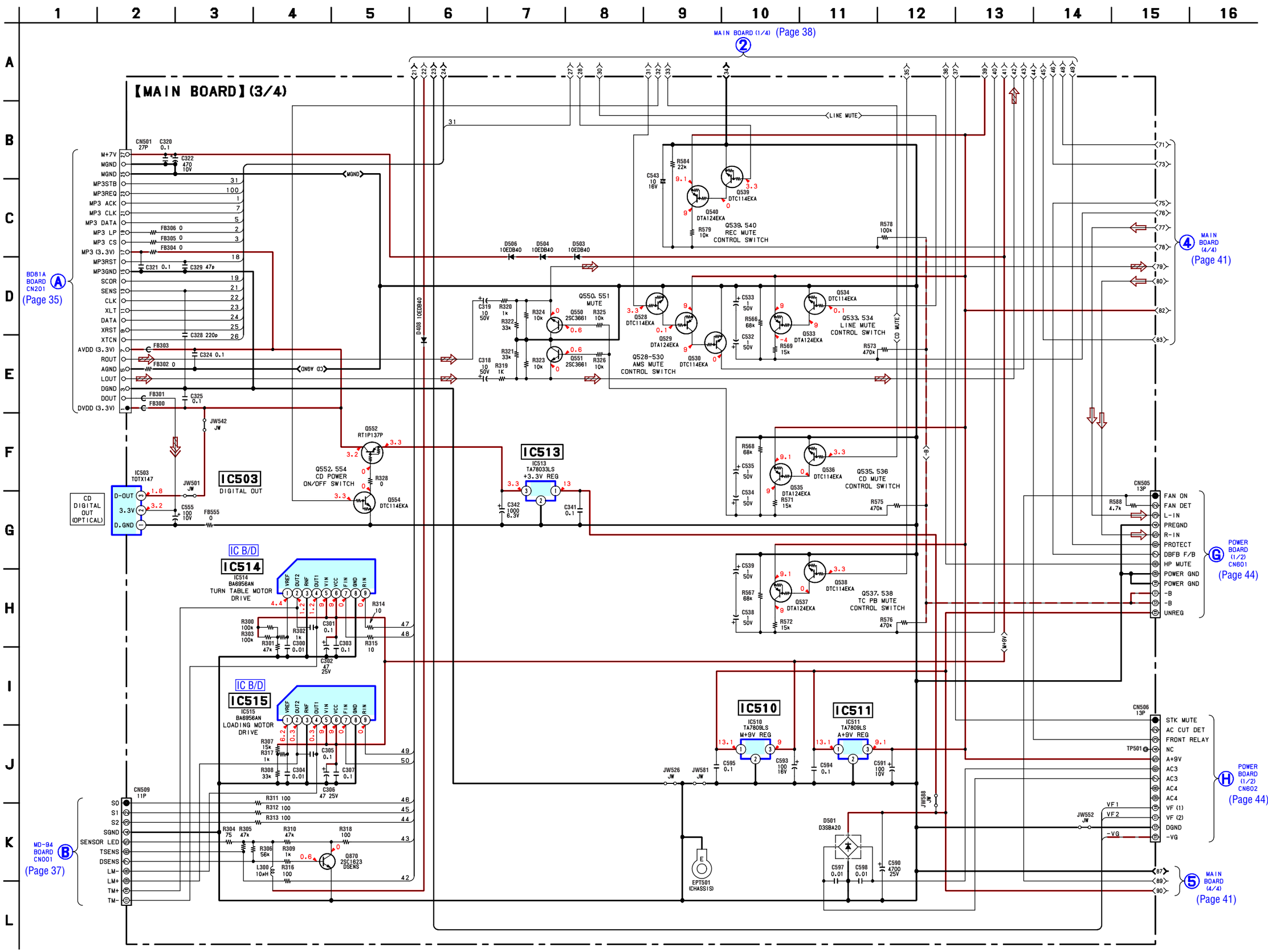

7-13. SCHEMATIC DIAGRAM — MAIN SECTION (4/4) —

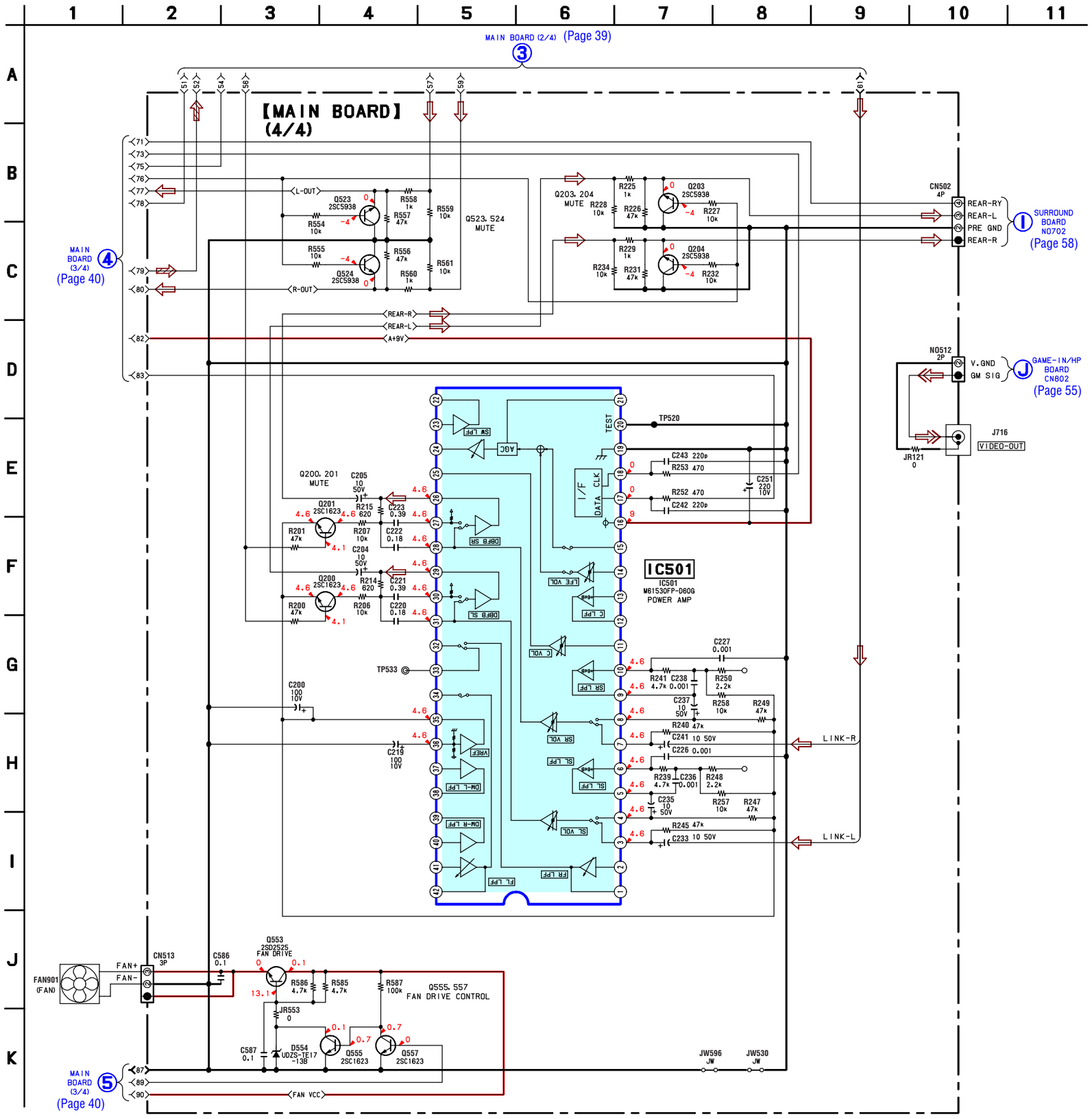

7-14. PRINTED WIRING BOARD — MAIN SECTION — • Refer to page 28 for Circuit Boards Location. : Uses unleaded solder.

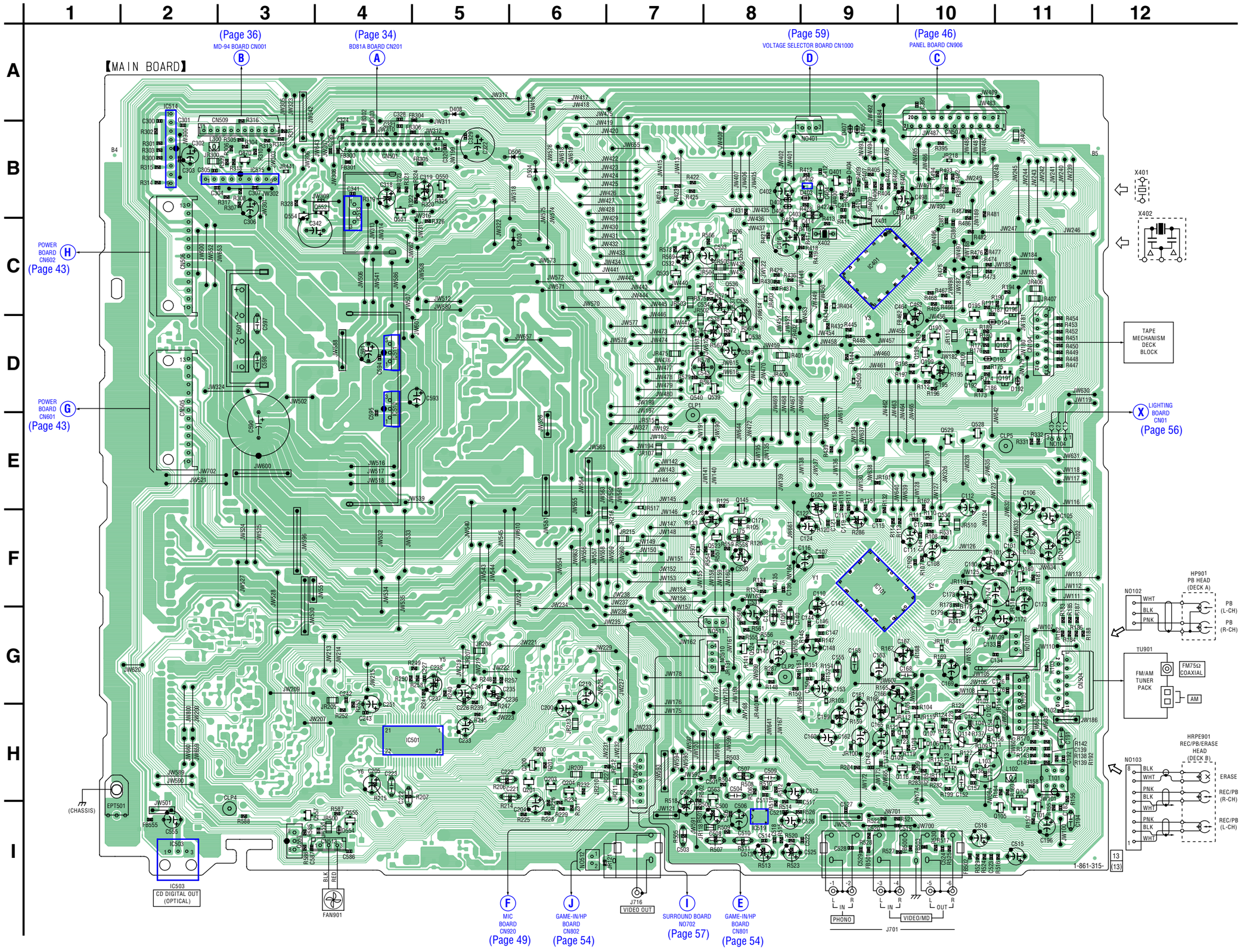

• **Semiconductor Location**

Ref. No.	Location
D192	D-11
D193	D-10
D194	C-10
D402	B-8
D403	B-9
D404	B-9
D405	B-9
D406	B-8
D407	B-9
D408	A-5
D501	D-3
D503	C-6
D504	B-6
D506	B-6
D554	I-4
IC101	F-9
IC401	C-9
IC402	B-9
IC501	H-5
IC503	I-2
IC510	E-4
IC511	D-4
IC513	B-4
IC514	B-2
IC515	B-3
IC519	I-8
Q101	H-11
Q102	G-10
Q103	G-10
Q104	H-11
Q105	H-11
Q106	H-10
Q107	H-10
Q108	H-10
Q109	H-10
Q110	H-10
Q111	G-10
Q112	H-10
Q113	H-10
Q114	H-10
Q115	H-10
Q116	H-10
Q140	G-8
Q145	E-8
Q165	G-10
Q180	F-11
Q190	D-10
Q191	D-11
Q192	D-10
Q193	D-11
Q194	D-10
Q195	C-10
Q196	C-11
Q198	D-10
Q199	D-10
Q200	H-6
Q201	H-6
Q203	H-6
Q204	H-6
Q401	B-9
Q523	F-8
Q524	G-8
Q528	E-10
Q529	E-10
Q530	E-10
Q533	C-7
Q534	C-8
Q535	C-8
Q536	C-8
Q537	C-8
Q538	D-8
Q539	D-8
Q540	D-7
Q550	B-5
Q551	B-4
Q552	B-4
Q553	I-3
Q554	B-3
Q555	I-4
Q557	I-4
Q563	H-8
Q870	B-3

7-15. PRINTED WIRING BOARDS — POWER SECTION — • Refer to page 28 for Circuit Boards Location. : Uses unleaded solder.

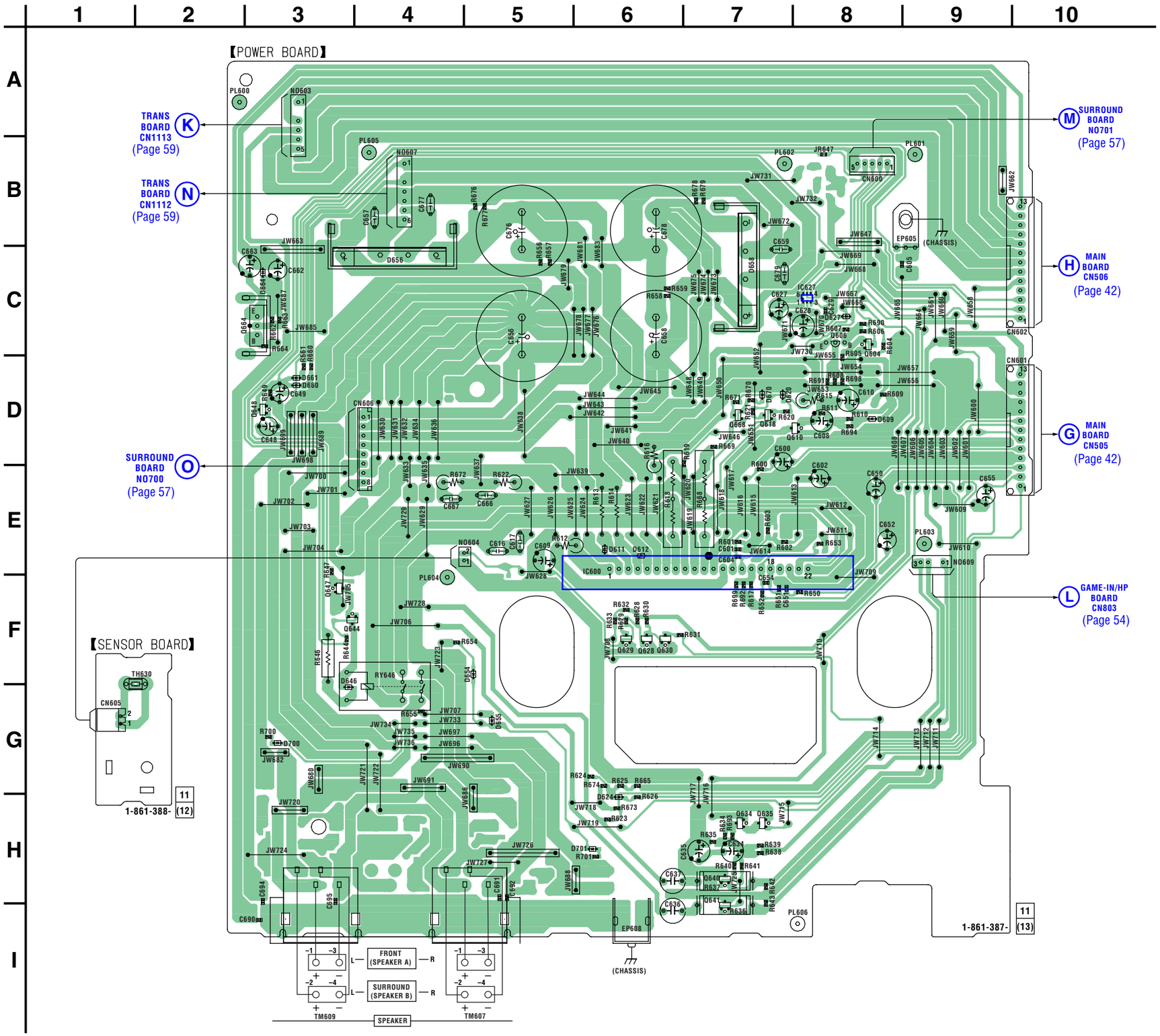

• Semiconductor Location

Ref. No.	Location
D609	D-8
D611	E-6
D612	E-6
D620	D-7
D624	H-6
D627	C-8
D646	F-3
D654	F-5
D655	G-5
D656	C-4
D658	C-7
D660	D-3
D661	D-3
D664	C-3
D670	D-7
D700	G-3
D701	H-6
IC600	E-6
IC627	C-8
Q604	C-8
Q606	C-8
Q610	D-8
Q618	D-7
Q628	F-6
Q629	F-6
Q630	F-6
Q634	H-7
Q635	H-7
Q640	H-7
Q641	H-7
Q644	F-3
Q647	F-3
Q648	D-3
Q664	C-3
Q668	D-7

7-16. SCHEMATIC DIAGRAM — POWER SECTION (1/2) —

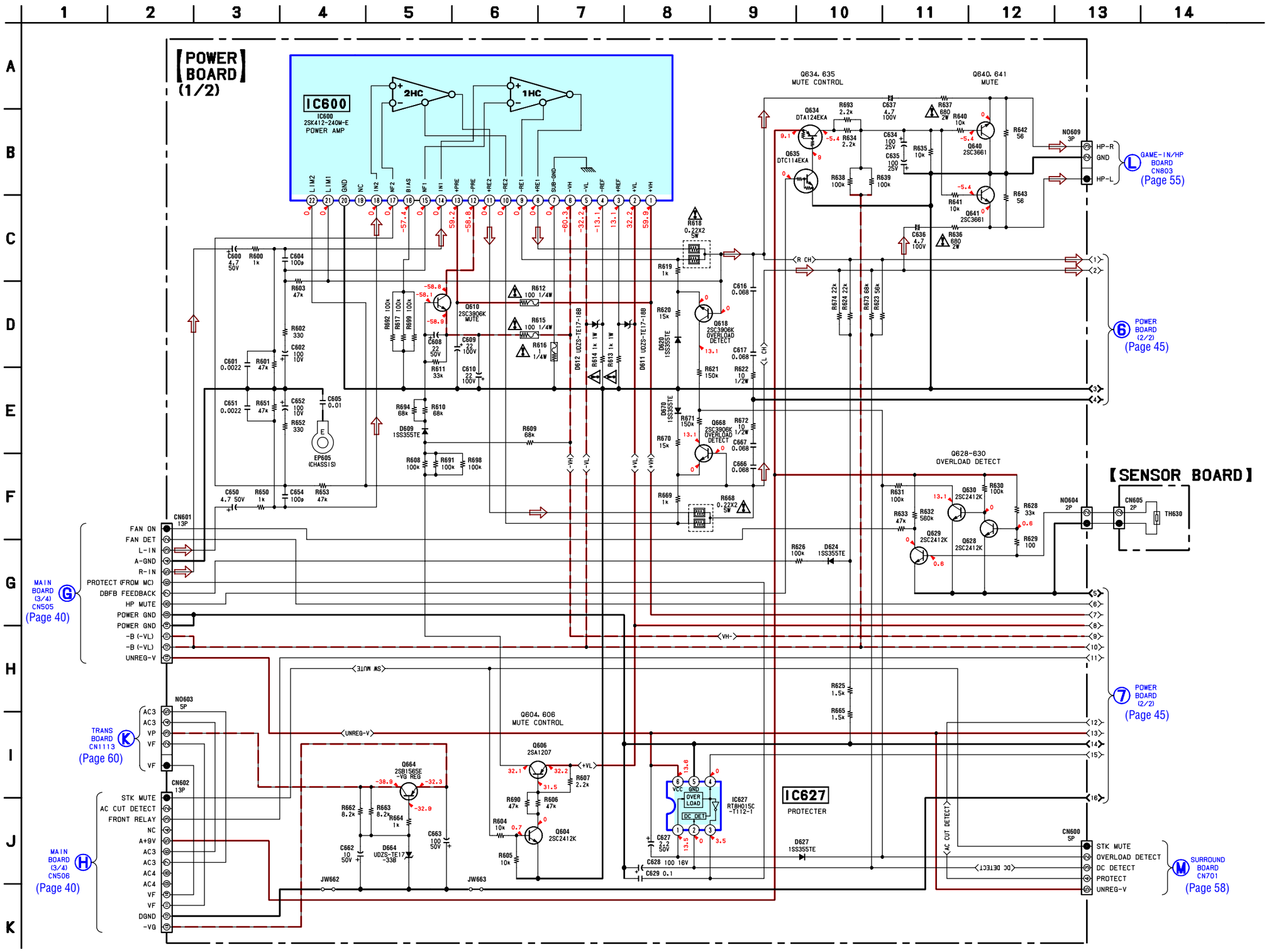

7-17. SCHEMATIC DIAGRAM — POWER SECTION (2/2) —

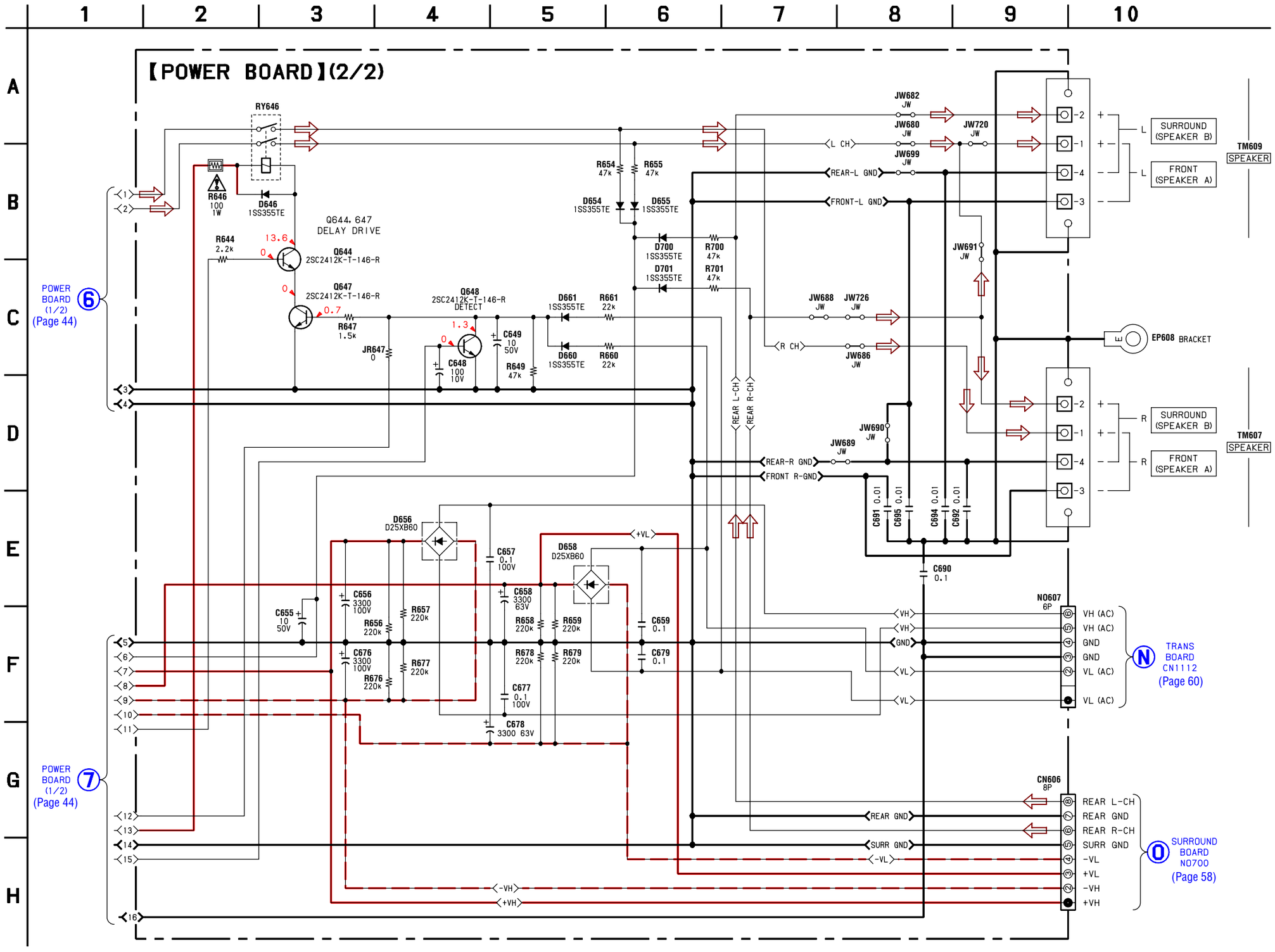

7-18. PRINTED WIRING BOARD — PANEL SECTION — • Refer to page 28 for Circuit Boards Location. : Uses unleaded solder.

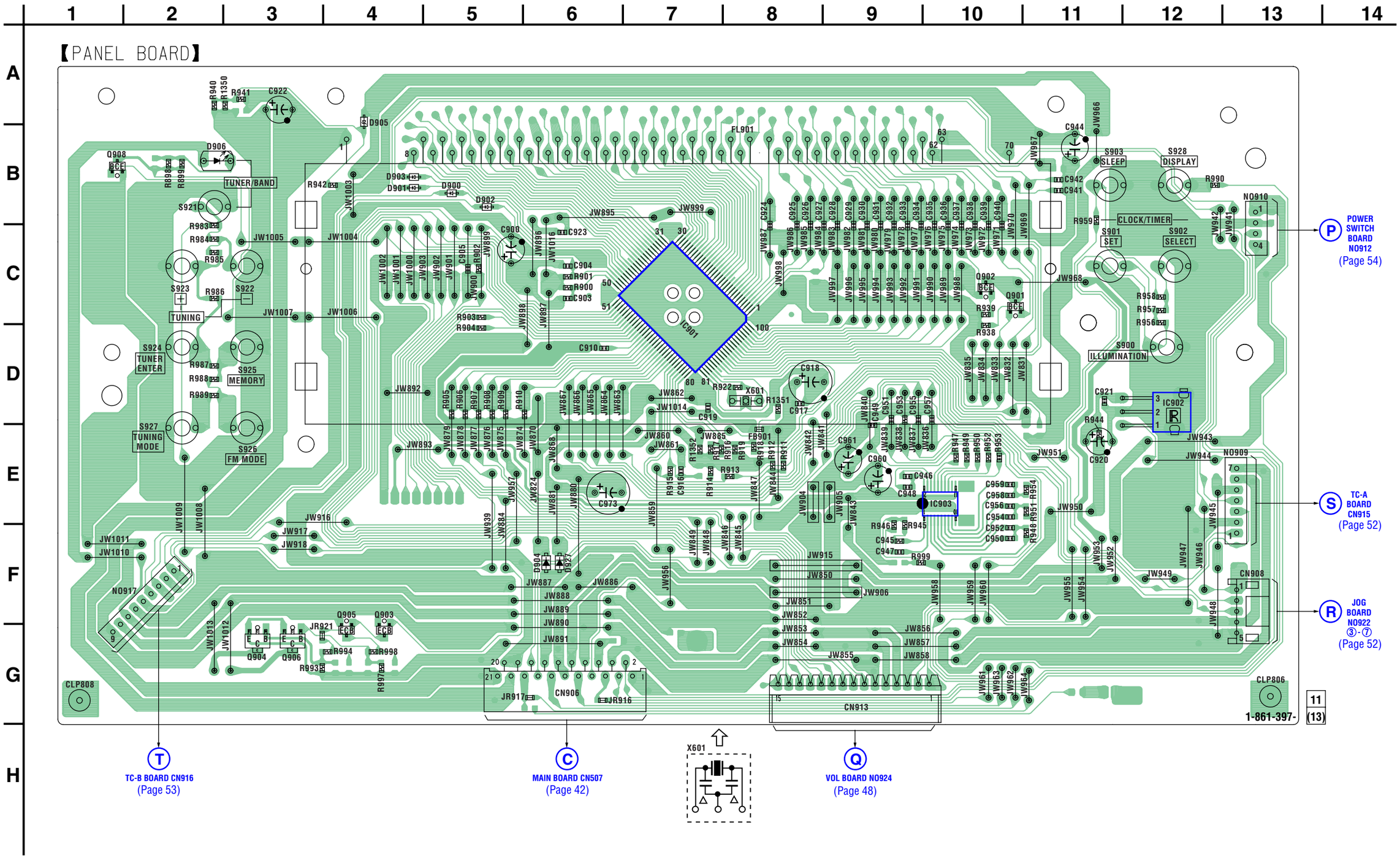

• **Semiconductor Location**

Ref. No.	Location	Ref. No.	Location	Ref. No.	Location
D900	B-5	D927	F-6	Q902	C-10
D901	B-4			Q903	G-4
D902	B-5	IC901	D-7	Q904	G-3
D903	B-4	IC902	D-12	Q905	G-4
D904	F-6	IC903	E-10	Q906	G-3
D905	A-4			Q908	B-1
D906	B-2	Q901	C-10		

7-19. SCHEMATIC DIAGRAM — PANEL SECTION —

- Refer to page 33 for Waveform.
- Refer to page 69 for IC Pin Description of IC901.

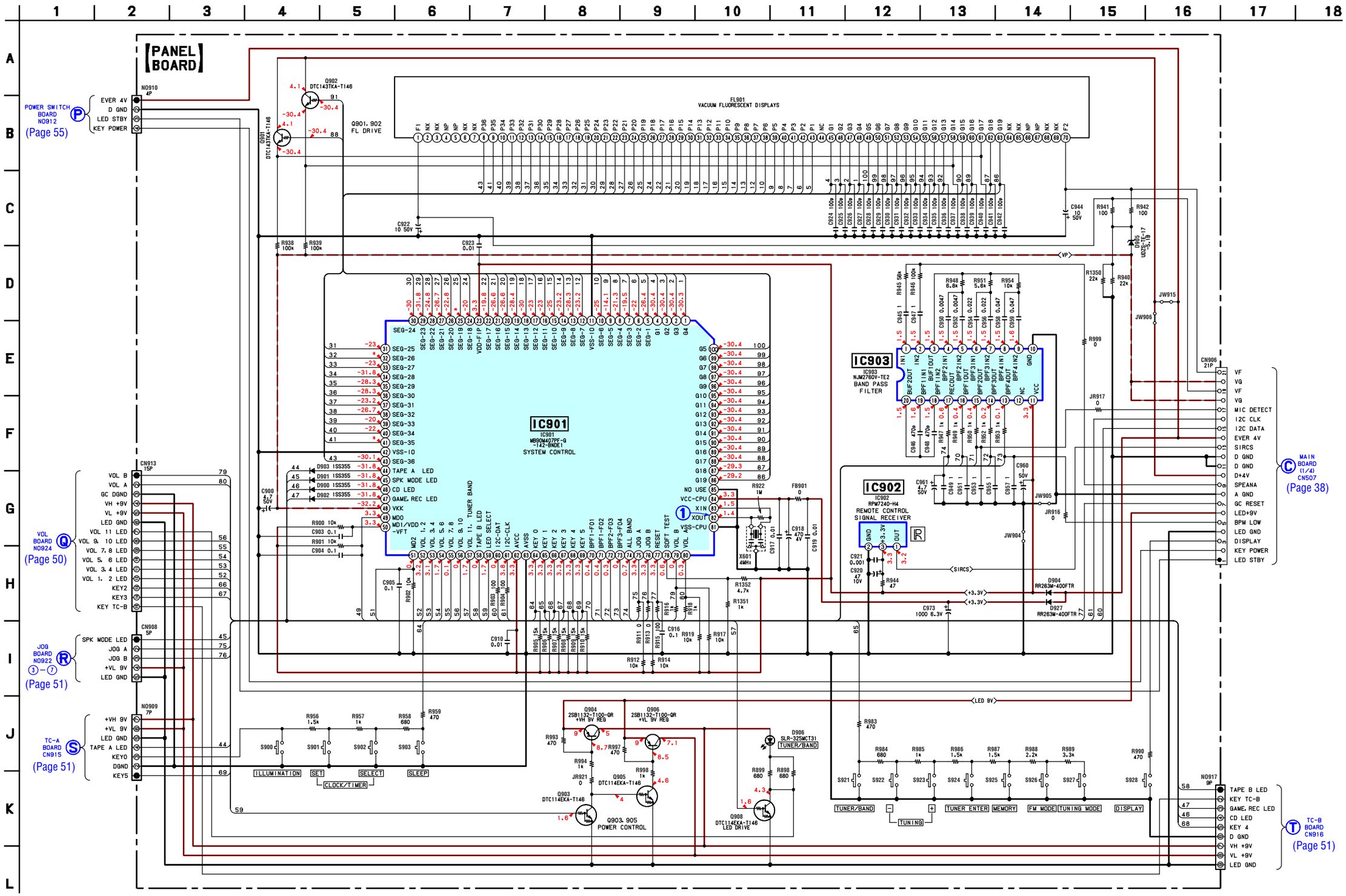

7-20. PRINTED WIRING BOARDS — VOLUME SECTION — • Refer to page 28 for Circuit Boards Location. : Uses unleaded solder.

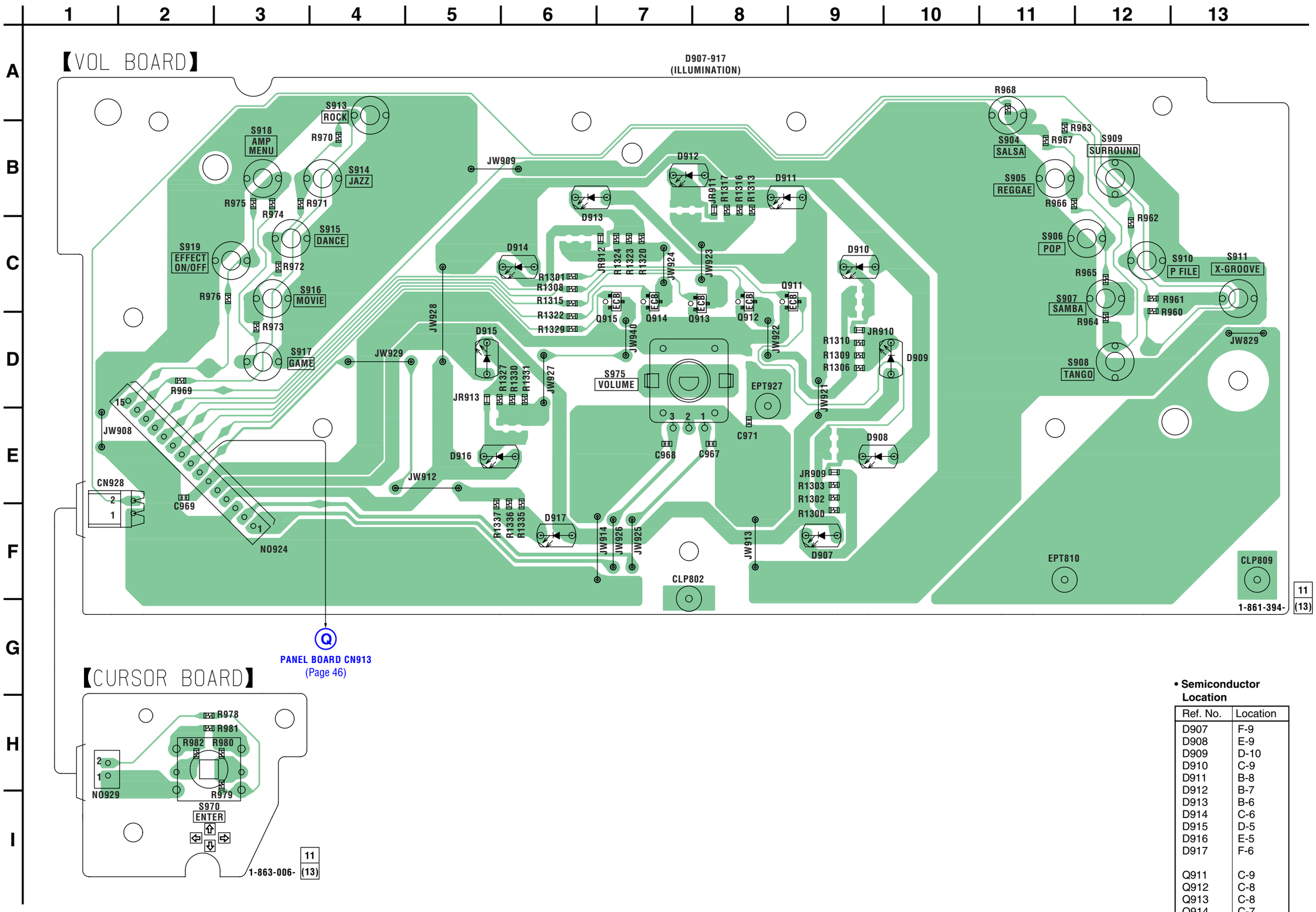

• **Semiconductor Location**

Ref. No.	Location
D907	F-9
D908	E-9
D909	D-10
D910	C-9
D911	B-8
D912	B-7
D913	B-6
D914	C-6
D915	D-5
D916	E-5
D917	F-6
Q911	C-9
Q912	C-8
Q913	C-8
Q914	C-7
Q915	C-7

7-21. PRINTED WIRING BOARD — MIC SECTION — • Refer to page 28 for Circuit Boards Location. : Uses unleaded solder.

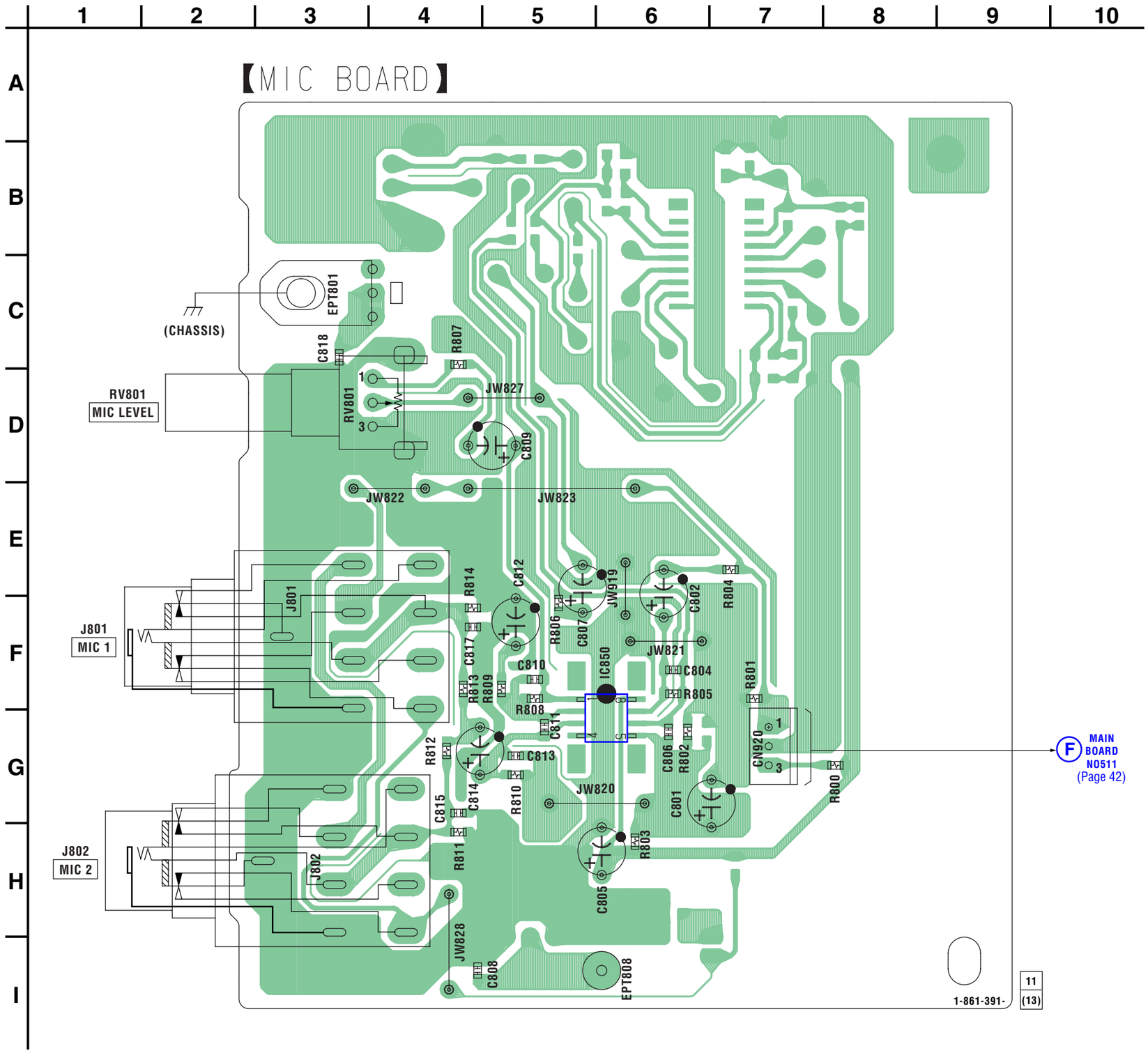

7-22. SCHEMATIC DIAGRAM — VOLUME, MIC SECTION —

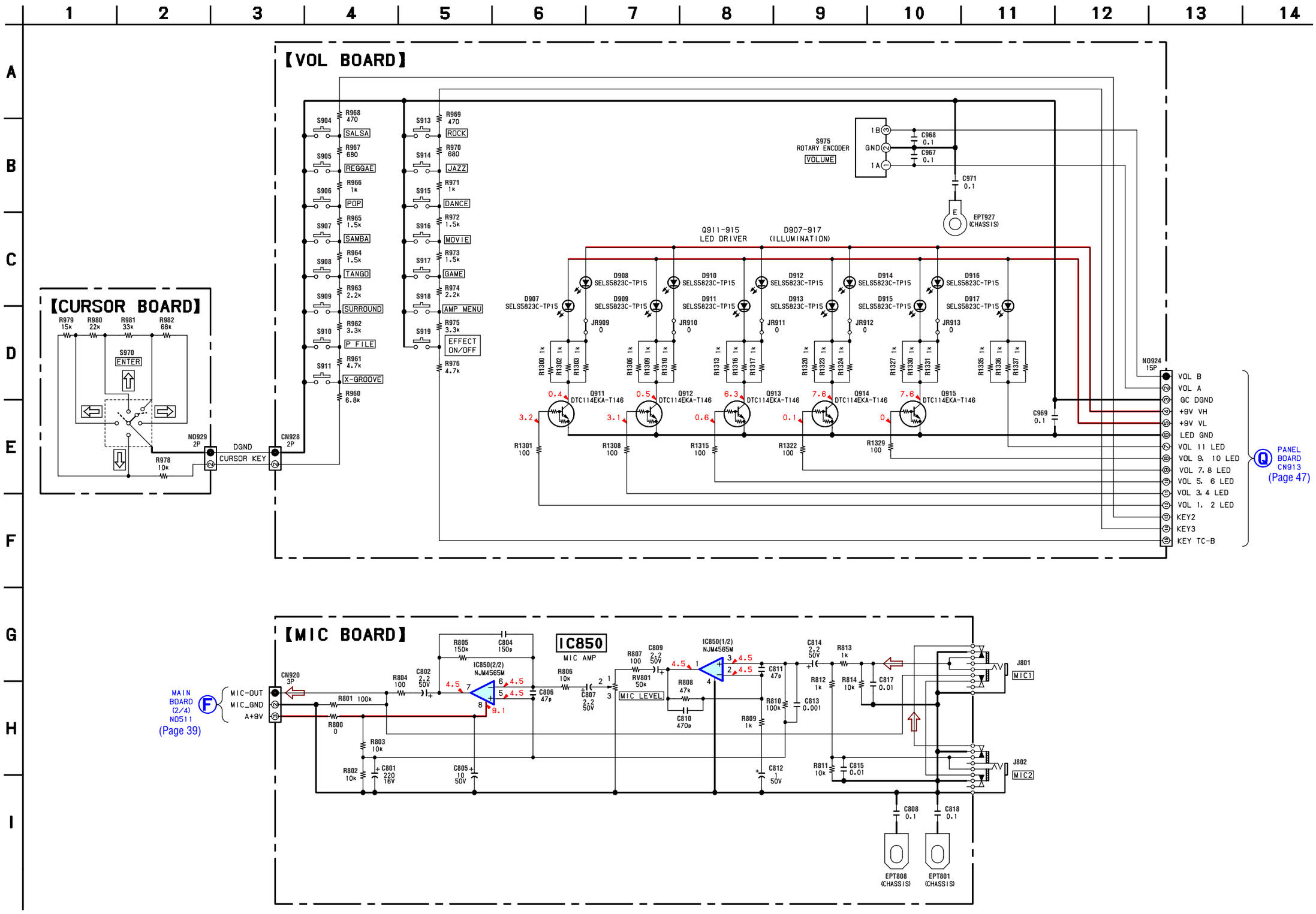

7-23. SCHEMATIC DIAGRAM — SWITCH SECTION —

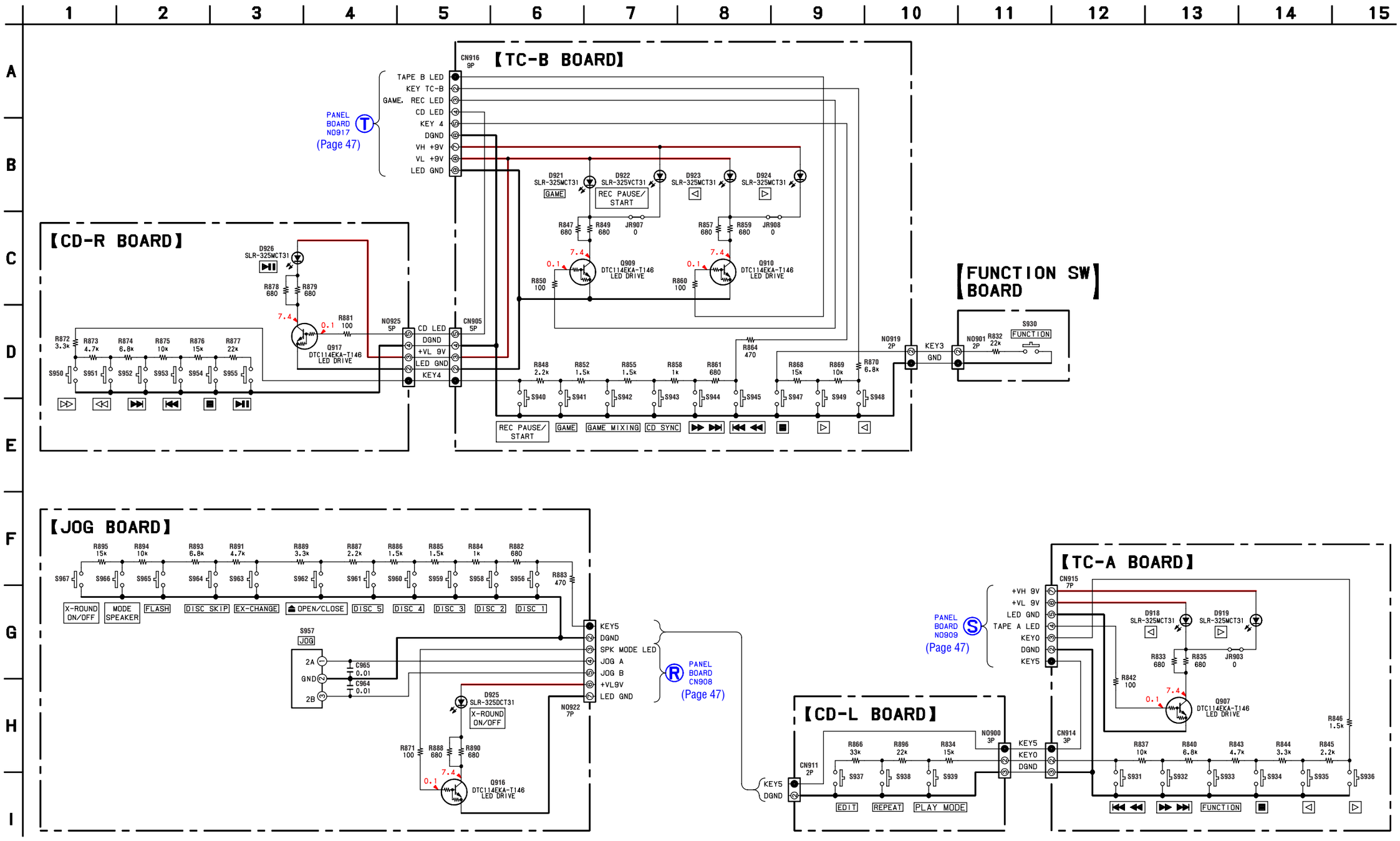

7-24. PRINTED WIRING BOARDS — SWITCH SECTION (1/2) — • Refer to page 28 for Circuit Boards Location. : Uses unleaded solder.

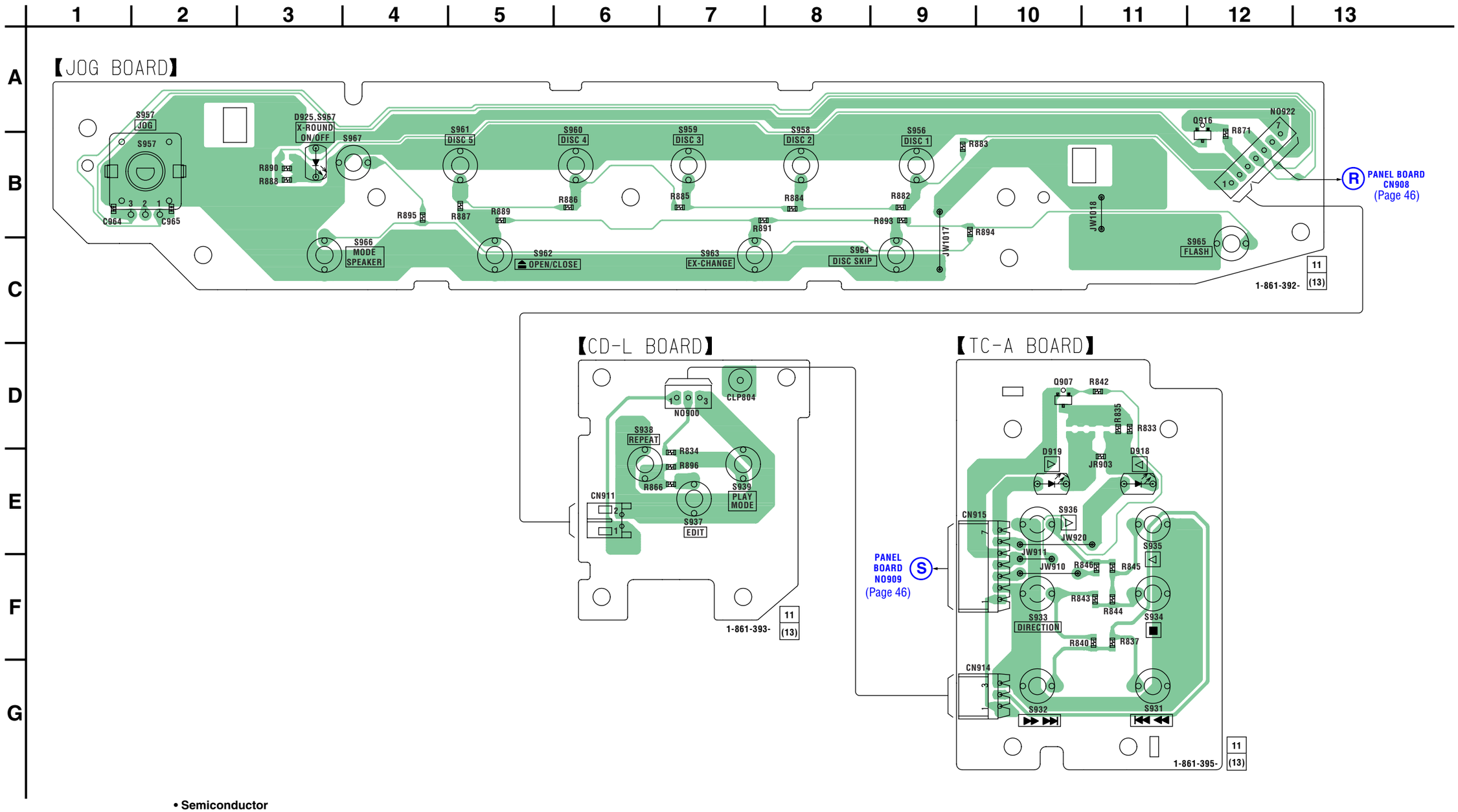

• **Semiconductor Location**

Ref. No.	Location
D918	E-11
D919	E-10
D925	A-3
Q907	D-10
Q916	A-12

7-25. PRINTED WIRING BOARDS — SWITCH SECTION (2/2) — • Refer to page 28 for Circuit Boards Location. : Uses unleaded solder.

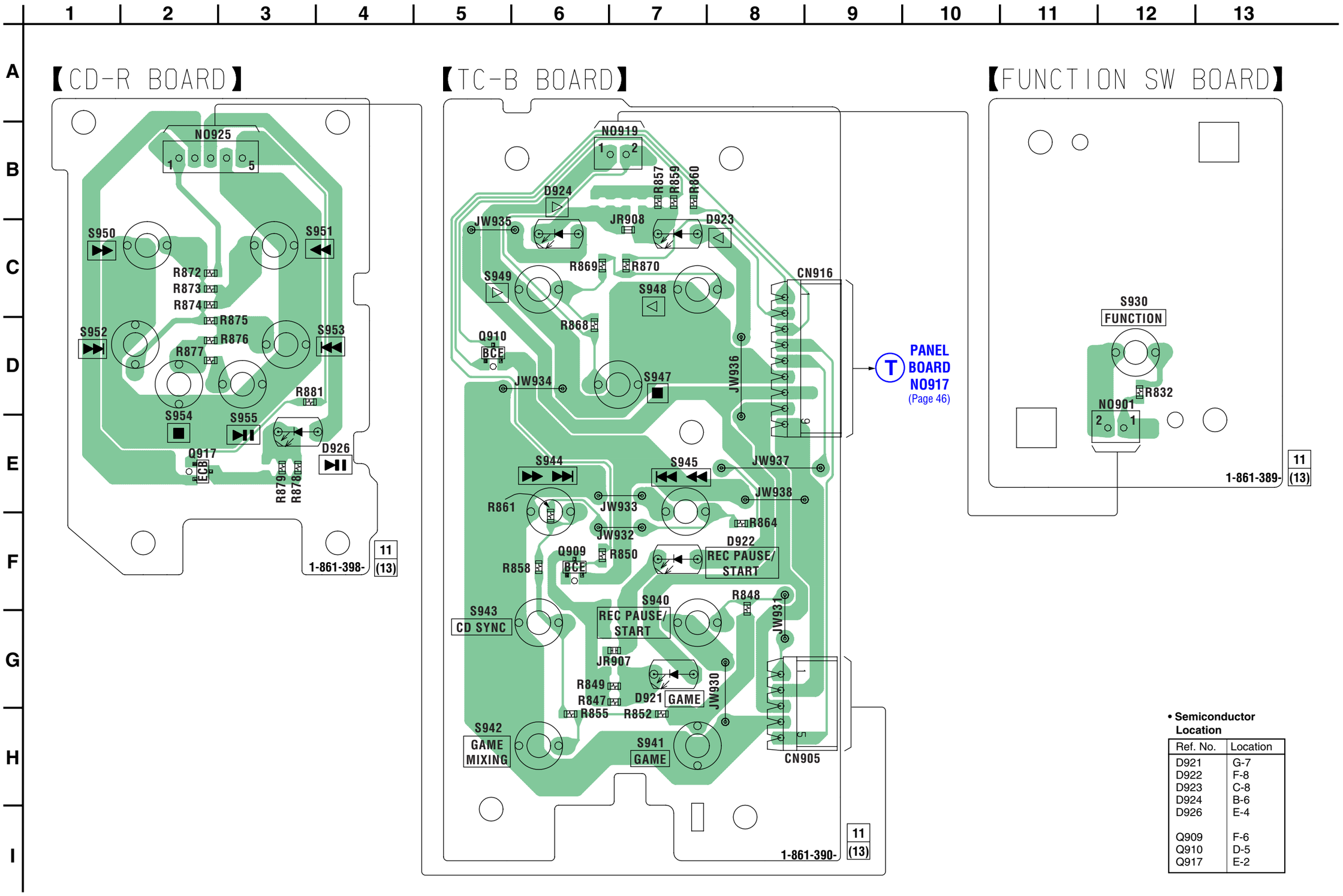

• Semiconductor Location

Ref. No.	Location
D921	G-7
D922	F-8
D923	C-8
D924	B-6
D926	E-4
Q909	F-6
Q910	D-5
Q917	E-2

7-26. PRINTED WIRING BOARDS — JACK SECTION — • Refer to page 28 for Circuit Boards Location. : Uses unleaded solder.

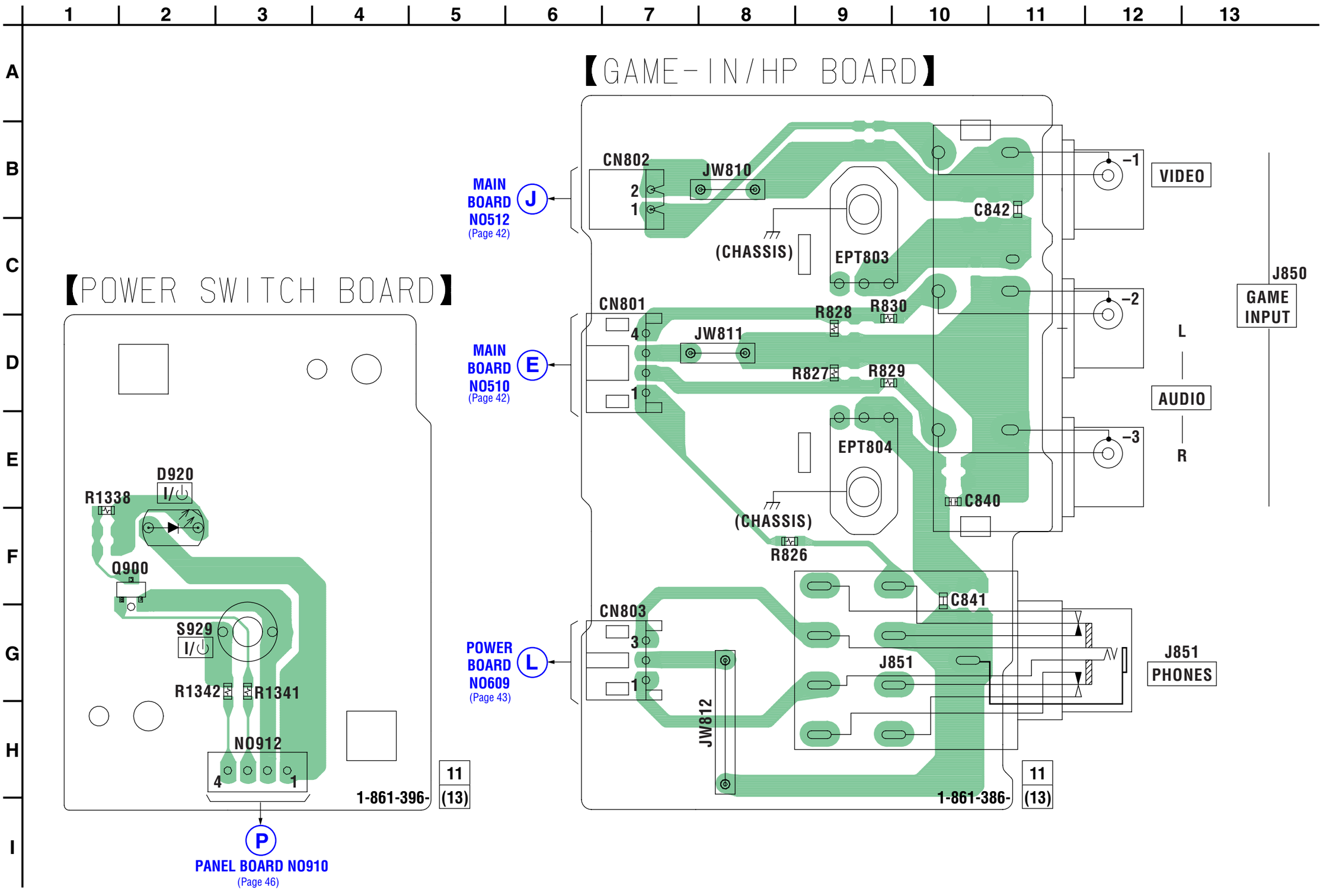

7-27. SCHEMATIC DIAGRAM — JACK SECTION —

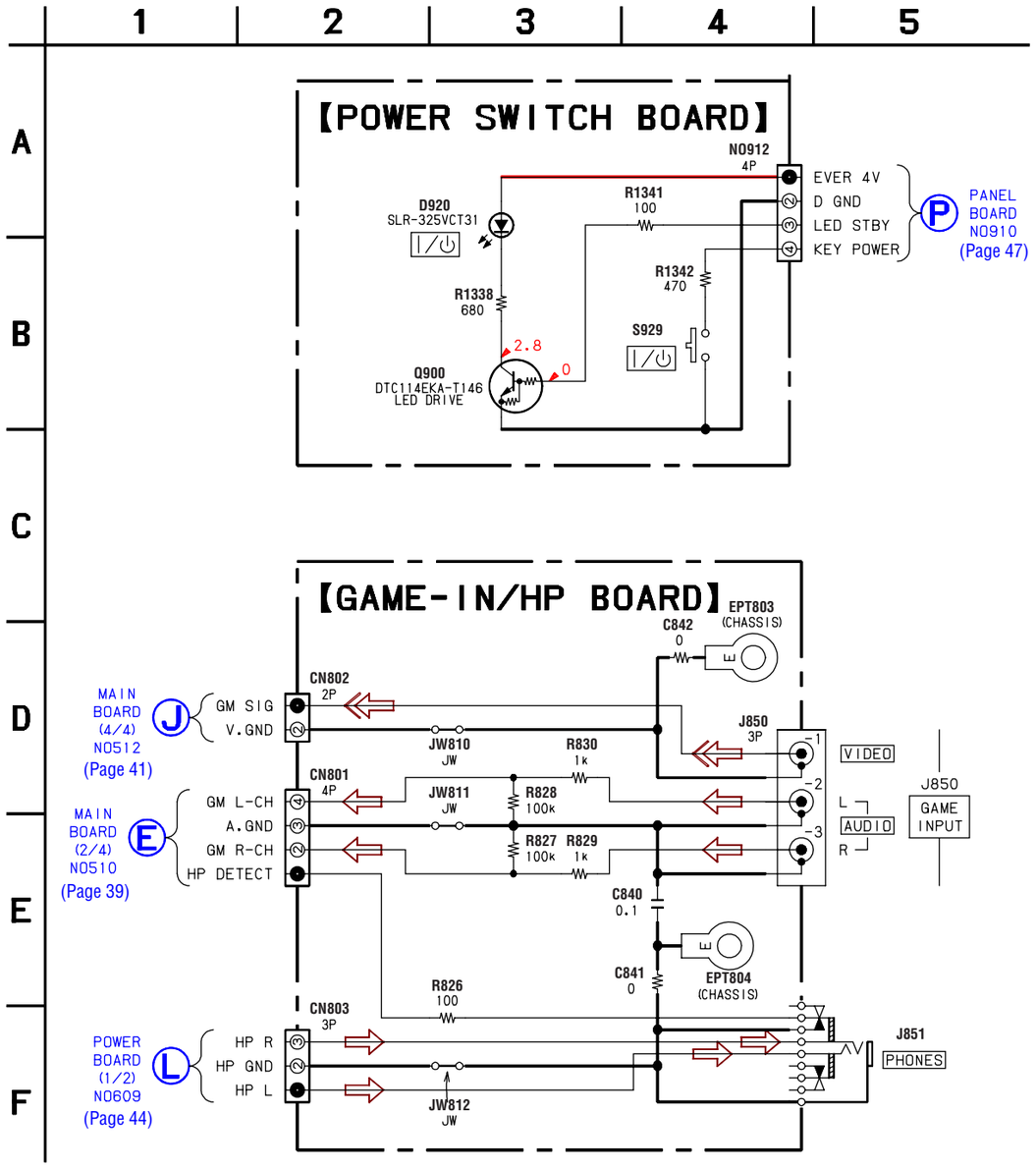

7-28. PRINTED WIRING BOARD — LIGHTING SECTION —

• Refer to page 28 for Circuit Boards Location.

: Uses unleaded solder.

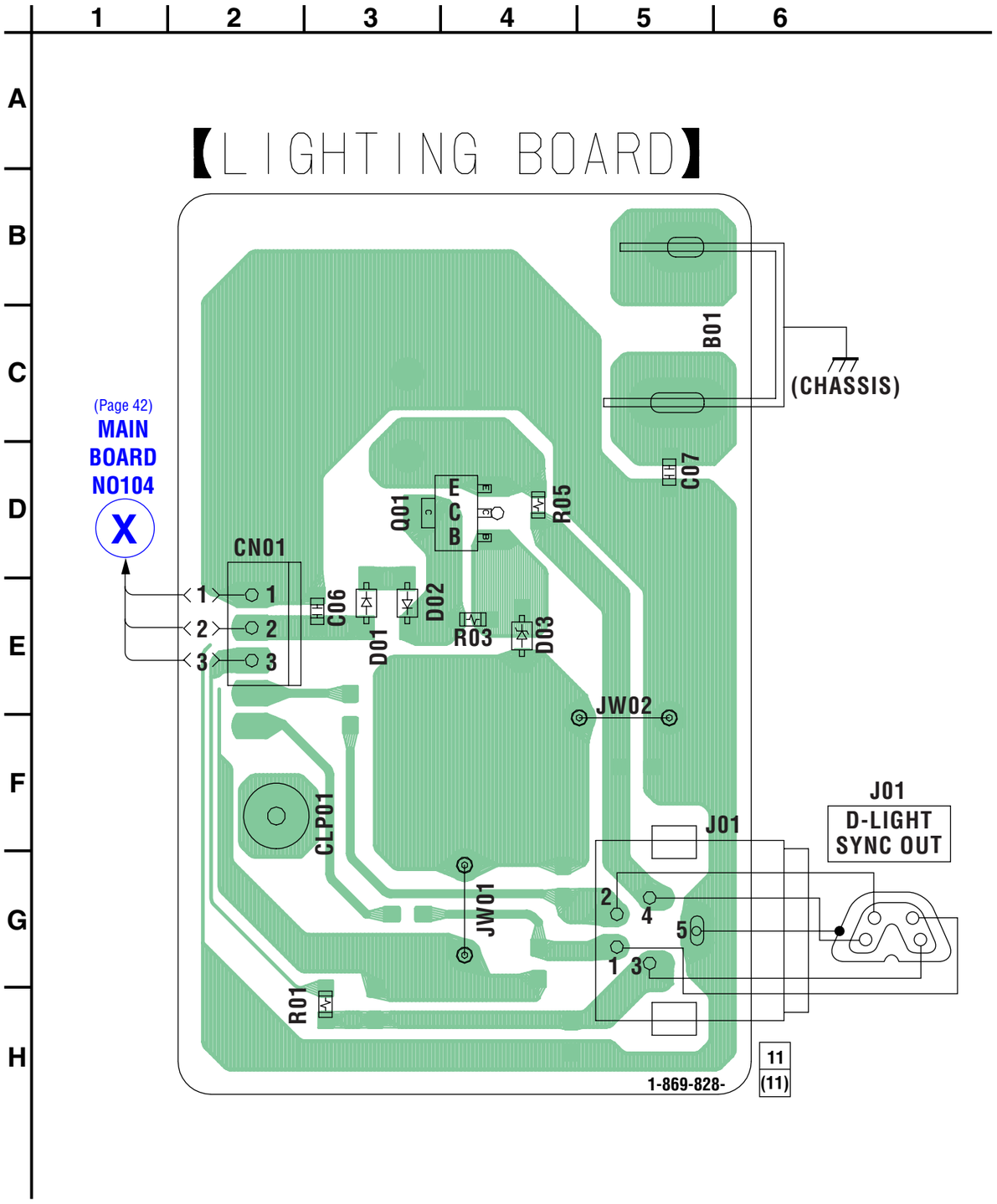

7-29. SCHEMATIC DIAGRAM — LIGHTING SECTION —

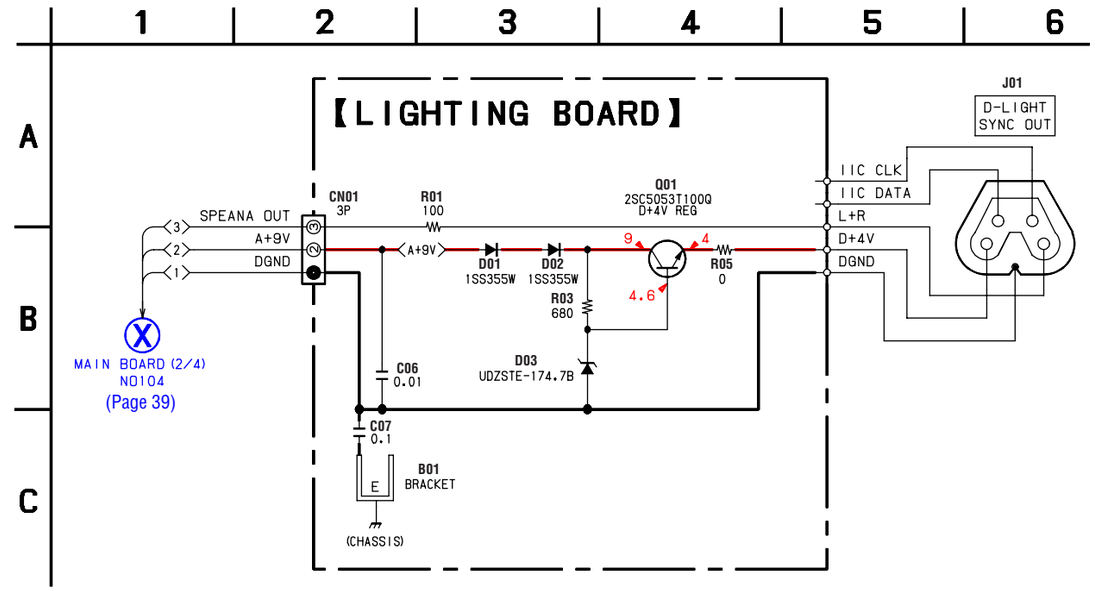

7-30. PRINTED WIRING BOARD — SURROUND SECTION — • Refer to page 28 for Circuit Boards Location. : Uses unleaded solder.

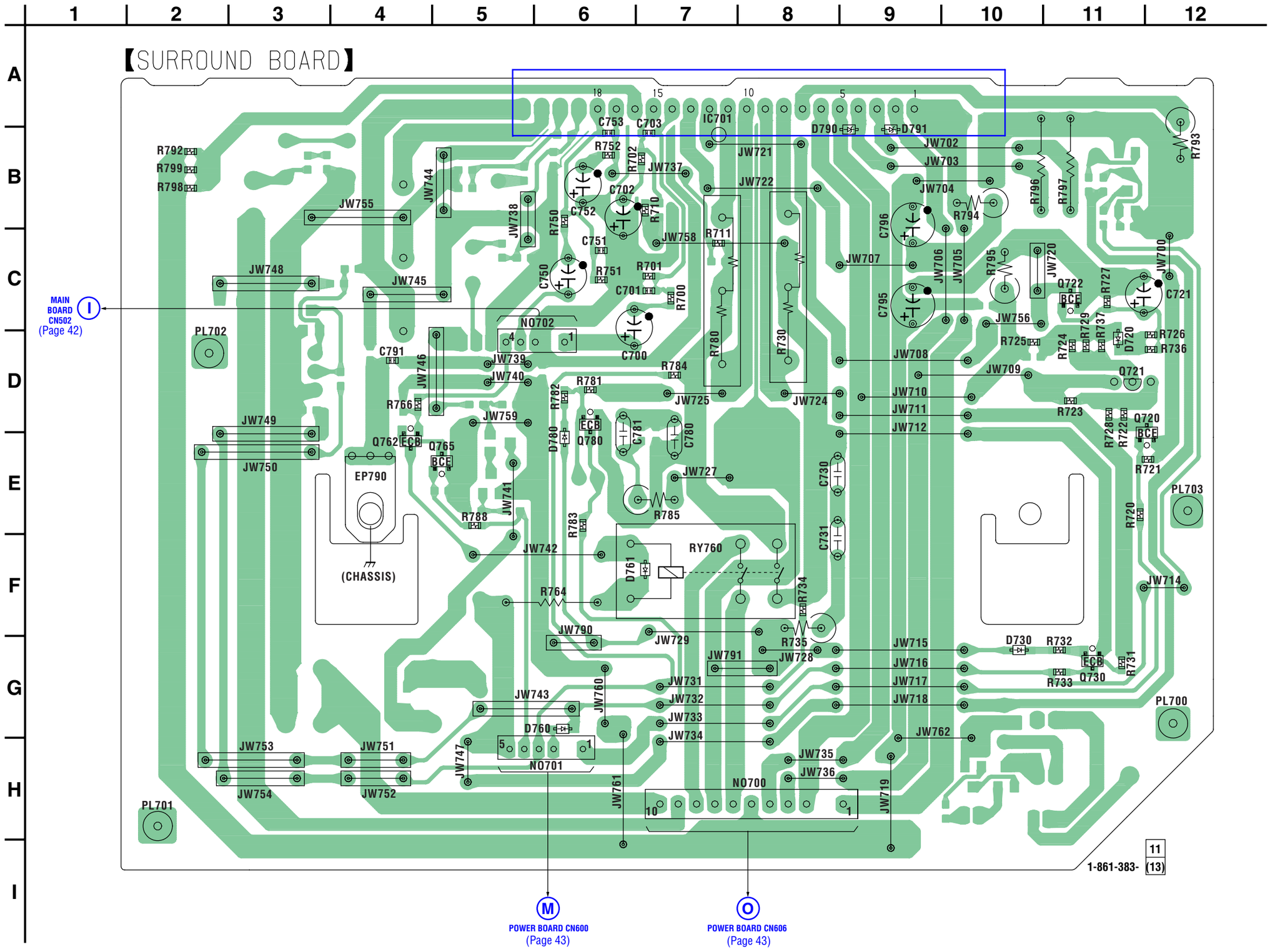

• Semiconductor Location

Ref. No.	Location
D720	D-11
D730	G-10
D760	G-6
D761	F-7
D780	E-6
D790	B-9
D791	B-9
IC701	A-7
Q720	D-11
Q721	D-11
Q722	C-11
Q730	G-11
Q762	E-4
Q765	E-4
Q780	D-6

7-31. SCHEMATIC DIAGRAM — SURROUND SECTION —

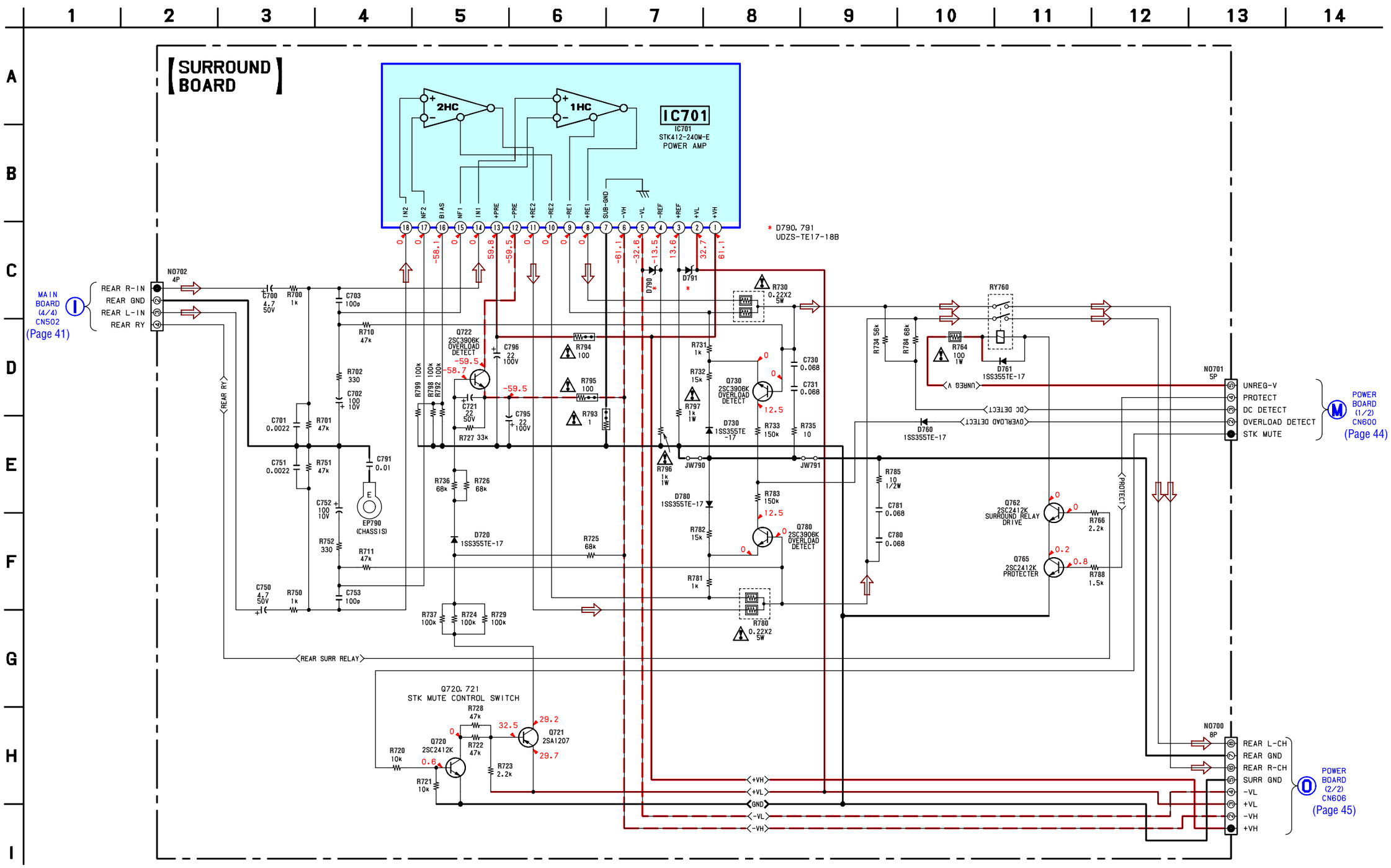

7-32. PRINTED WIRING BOARDS — TRANSFORMER SECTION — • Refer to page 28 for Circuit Boards Location. : Uses unleaded solder.

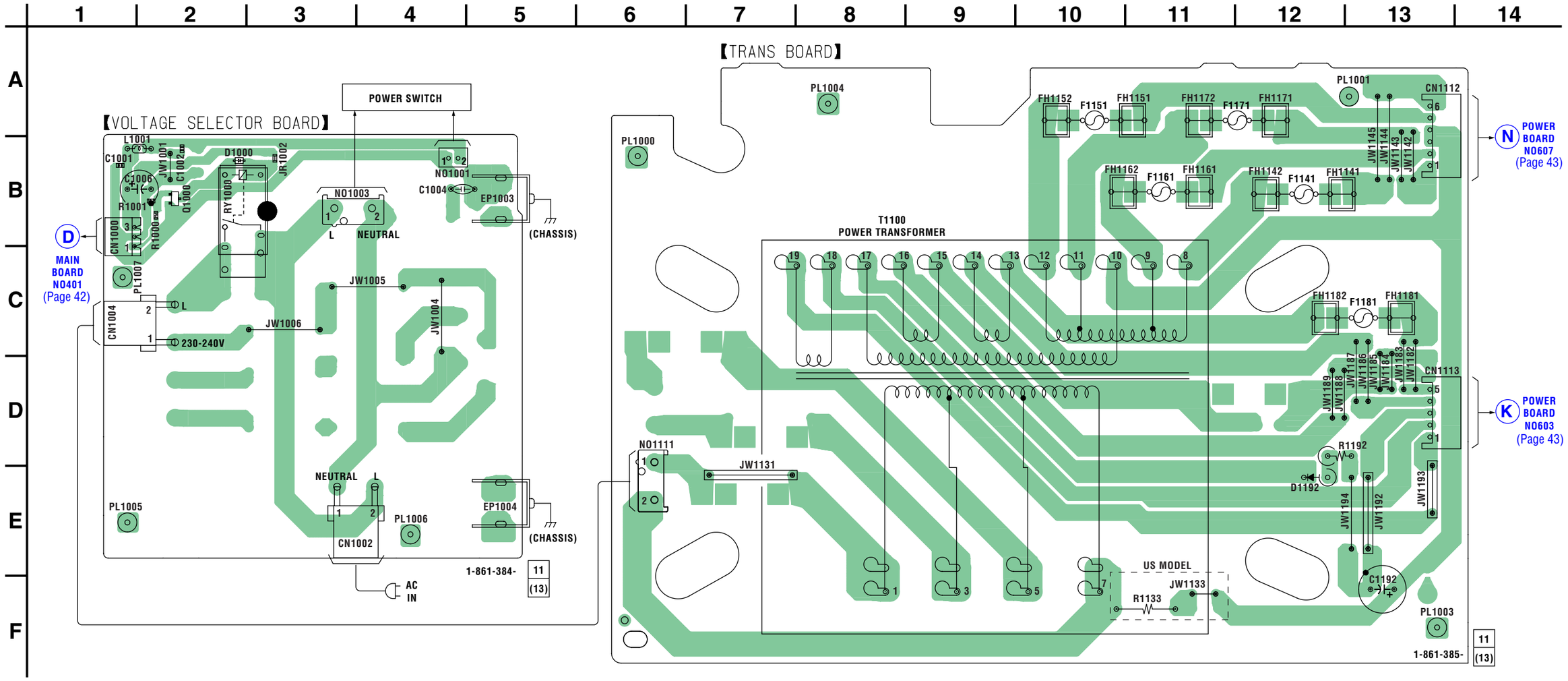

7-33. SCHEMATIC DIAGRAM — TRANSFORMER SECTION —

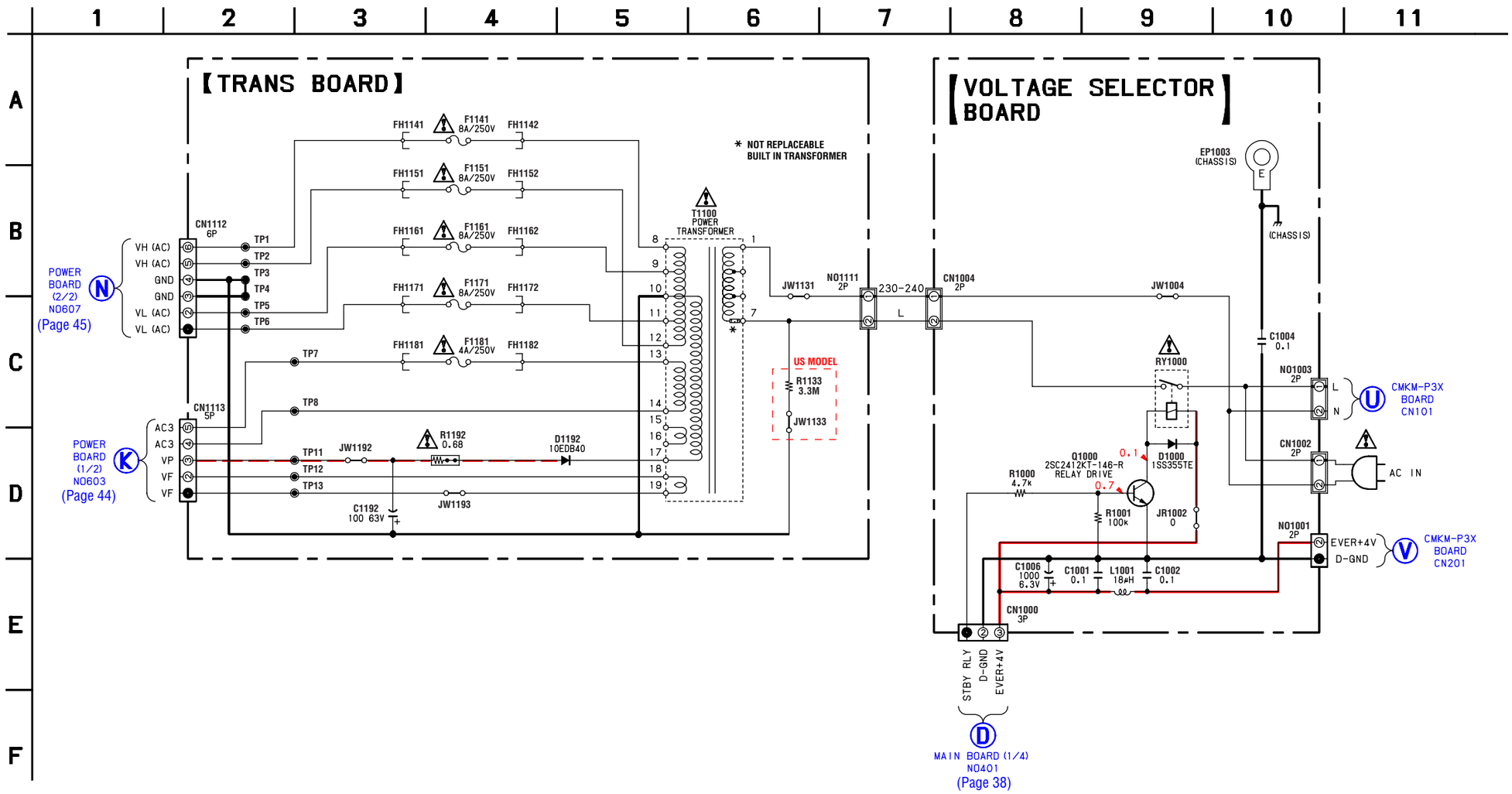

• IC BLOCK DIAGRAMS

IC301 TC94A34FG-002 (BD81A Board)

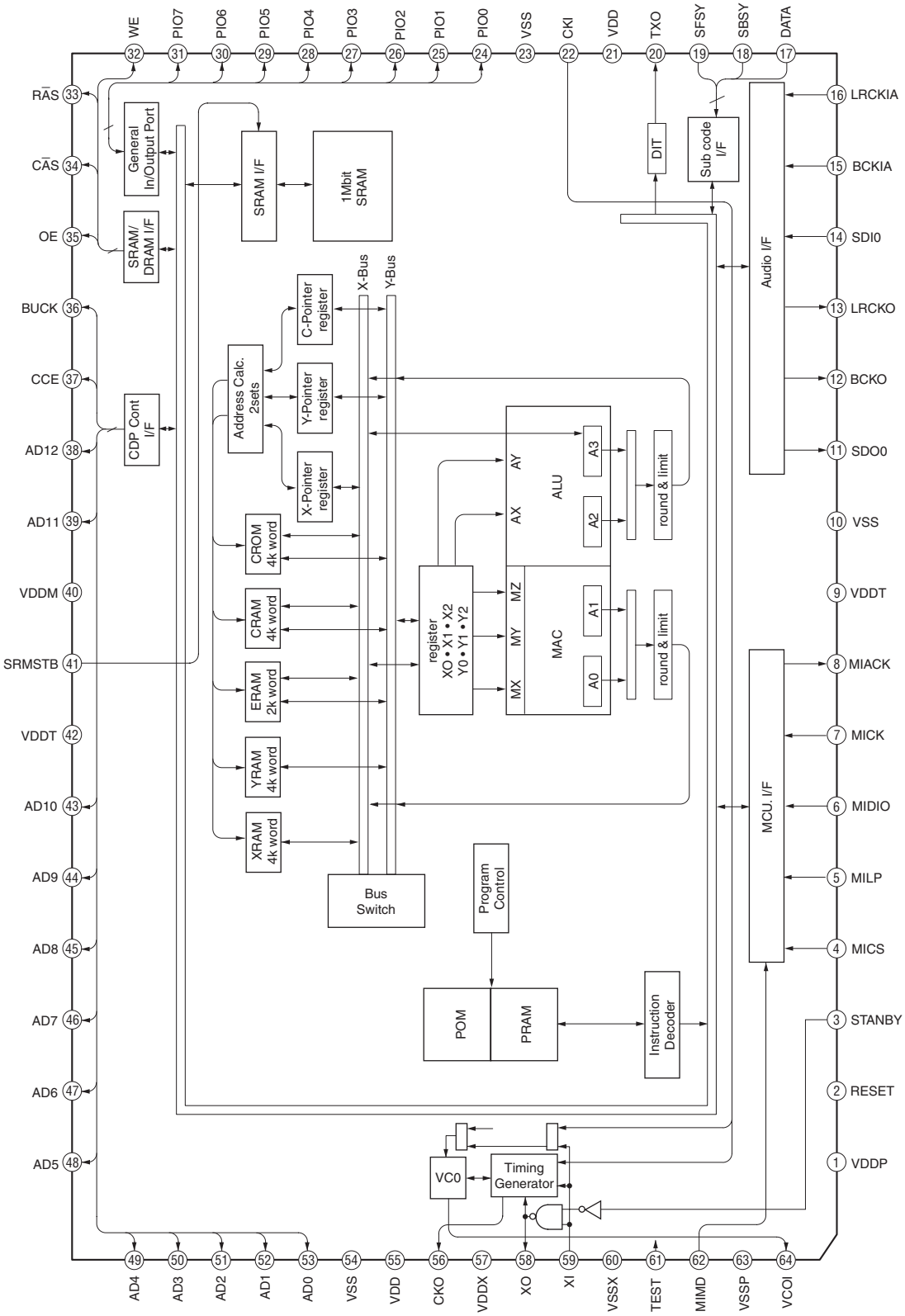

IC251 BA5947FM (BD81A Board)

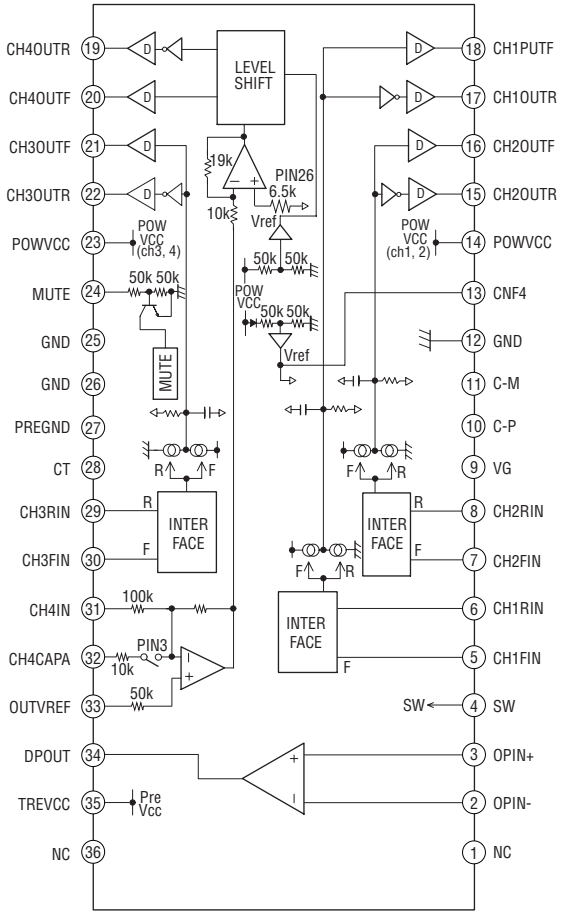

IC514 BA6956AN (MAIN Board)
IC515 BA6956AN (MAIN Board)

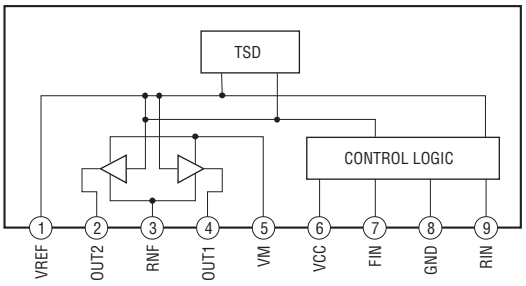

• IC PIN DESCRIPTIONS

• IC101 CXD3059AR (RF AMP, DIGITAL SIGNAL PROCESSOR) (BD81A BOARD)

Pin No.	Pin Name	I/O	Pin Description
1	MIRR	I/O	Mirror signal input/output Not used in this set. (Open)
2	DFCT	I/O	Defect signal input/output Not used in this set. (Open)
3	FOK	I/O	Focus OK signal input/output Not used in this set. (Open)
4	VSS	—	Internal digital ground pin
5	LOCK	I/O	GFS is sampled at 460Hz; when GFS is high , this pin outputs a high signal If GFS is low eight consecutive Not used in this set. (Open)
6	MDP	O	Spindle motor servo control signal output
7	SSTP	I	Disc innermost detection signal input
8	IOVSS1	—	I/O digital ground pin
9	SFDR	O	Sled drive signal output
10	SRDR	O	Sled drive signal output
11	TFDR	O	Tracking drive signal output
12	TRDR	O	Tracking drive signal output
13	FFDR	O	Focus drive signal output
14	FRDR	O	Focus drive signal output
15	IOVDD1	—	I/O digital power supply pin (+3.3 V)
16	AVDD0	—	Analog power supply pin (+3.3 V)
17	AVSS0	—	Analog ground pin
18	NC	—	Not used. (Open)
19	E	I	E signal input
20	F	I	F signal input
21	TEI	I	Tracking error signal input
22	TEO	O	Tracking error signal output
23	FEI	I	Focus error signal input
24	FEO	O	Focus error signal output
25	VC	O	Center voltage output
26	A	I	A signal input
27	B	I	B signal input
28	C	I	C signal input
29	D	I	D signal input
30	NC	—	Not used. (Open)
31	AVDD4	—	Analog power supply pin (+3.3 V)
32	RFDCO	O	RFDC signal output Not used in this set. (Open)
33	PDSENS	I	Reference voltage pin for PD Connect to ground in this set.
34	AC_SUM	O	RFAC summing amplifier signal output
35	EQ_IN	I	Equalizer circuit signal input
36	LD	O	APC amplifier signal output
37	PD	I	APC amplifier signal input
38	NC	—	Not used. (Open)
39	RFC	I	Equalizer cut-off frequency adjustment pin
40	AVSS4	—	Analog ground pin
41	RFACO	O	RFAC signal output
42	RFACI	I	RFAC signal input or EFM signal input
43	AVDD3	—	Analog power supply pin (+3.3 V)
44	BIAS	I	Asymmetry circuit constant current signal input
45	ASYI	I	Asymmetry comparator voltage signal input
46	ASYO	O	EFM full-swing signal output (Low=VSS, High=VDD)
47	VPCO	O	Wide-band EFM PLL charge pump signal output Not used in this set. (Open)
48	VCTL	I	Wide-band EFM PLL VCO2 control voltage signal input
49	AVSS3	—	Analog ground pin
50	CLTV	I	Multiplier VCO1 control voltage signal input

Pin No.	Pin Name	I/O	Pin Description
51	FILO	O	Master PLL (slave=digital PLL) filter signal output
52	FILI	I	Master PLL filter signal input
53	PCO	O	Master PLL charge pump signal output
54	AVDD5	—	Analog power supply pin (+3.3 V)
55	DDVROUT	O	DC/DC converter signal output
56	DDVRSEN	I	DC/DC converter output voltage monitor pin
57	AVSS5	—	Analog ground pin
58	DDCR	I	DC/DC converter reset pin
59	NC	—	Not used. (Open)
60	BCKI	I	D/A interface bit clock signal input
61	PCMDI	I	D/A interface serial data signal input (2's COMP, MSB first)
62	LRCKI	I	D/A interface LR clock signal input
63	LRCK	O	D/A interface LR clock signal output f=Fs
64	VSS	—	Internal digital ground pin
65	PCMD	O	D/A interface serial data signal output (2's COMP, MSB first)
66	BCK	O	D/A interface bit clock signal output
67	VDD	—	Internal digital power supply pin (+3.3 V)
68	EMPH	O	High when the playback disc has emphasis, low it has not
69	EMPHI	I	High when de-emphasis is ON, low when input OFF
70	IOVDD2	—	I/O digital power supply pin (+3.3 V)
71	DOUT	O	Digital signal output
72	TEST	I	Test pin Normally ground
73	TEST1	I	Test pin Normally ground
74	IOVSS2	—	I/O digital ground pin
75	NC	—	Not used. (Open)
76	XVSS	—	Master clock ground pin
77	XTAO	O	Crystal oscillation circuit signal output (16.9344 MHz)
78	XTAI	I	Crystal oscillation circuit signal input (16.9344 MHz)
79	XVDD	—	Master clock power supply pin (+3.3 V)
80	AVDD1	—	Analog power supply pin (+3.3 V)
81	AOUT1	O	Lch analog signal output
82	VREFL	O	Lch reference voltage signal output
83	AVSS1	—	Analog ground pin
84	AVSS2	—	Analog ground pin
85	VREFR	O	Rch reference voltage signal output
86	AOUT2	O	Rch analog signal output
87	AVDD2	—	Analog power supply pin (+3.3 V)
88	NC	—	Not used. (Open)
89	IOVDD0	—	I/O digital power supply pin (+3.3 V)
90	RMUT	O	Rch "0" detection flag Not used in this set. (Open)
91	LMUT	O	Lch "0" detection flag Not used in this set. (Open)
92	NC	—	Not used. (Open)
93	XTSL	I	Crystal selection input Not used in this set. (Connect to ground.)
94	IOVSS0	—	I/O digital ground pin
95	XTACN	I	Oscillation circuit control signal input Self-oscillation when high, oscillation stop when low
96	SQSO	O	Subcode Q 80-bit and PCM peak and level data signal output CD TEXT data signal output Not used in this set. (Open)
97	SQCK	I	SQSO readout clock signal input
98	SBSO	O	Subcode P to W serial signal output Not used in this set. (Open)
99	EXCK	I	SBSO readout clock signal input Not used in this set. (Open)
100	XRST	I	System reset signal input "L": Reset
101	SYSM	I	Mute signal input "H": Mute Connect to ground in this set.

Pin No.	Pin Name	I/O	Pin Description
102	DATA	I	Serial data signal input
103	VSS	—	Internal digital ground pin
104	XLAT	I	Latch signal input The serial data is latched at the falling edge
105	CLOCK	I	Serial data transfer clock signal input
106	VDD	—	Internal digital power supply pin (+3.3 V)
107	SENS	O	SENS signal output
108	SCLK	I	SENS serial data readout clock signal input
109	ATSK	I/O	Anti-shock signal input/output Not used in this set. (Open)
110	WFCK	O	WFCK signal output Not used in this set. (Open)
111	XUGF	O	XUGF signal output Not used in this set. (Open)
112	XPCK	O	XPCK signal output Not used in this set. (Open)
113	GFS	O	GFS signal output Not used in this set. (Open)
114	C2PO	O	C2PO signal output Not used in this set. (Open)
115	SCOR	O	High output when the subcode sync, S0 or S1, is detected
116	VDD	—	Internal digital power supply pin (+3.3 V)
117	C4M	O	4.2336MHz signal output Not used in this set. (Open)
118	WDCK	O	Word clock signal output f=2Fs Not used in this set. (Open)
119	COUT	I/O	Track number count signal input/output Not used in this set. (Open)
120	NC	—	Not used. (Open)

• IC401 M3062CMEN-A17FPUO (MASTER CONTROL) (MAIN BOARD (1/4))

Pin No.	Pin Name	I/O	Pin Description
1	MP3 ACK	I	Acknowledgement signal input from MP3 decoder IC "L": acknowledged
2	MP3 LP	O	Latch signal output to MP3 decoder IC "L": enable
3	MP3 CS	O	Chip select signal output MP3 decoder IC "L": enable
4	SIRCS	I	Remote control signal input
5	MP3 DATA OUT	O	Serial data signal output to MP3 decoder IC
6	MP3 DATA IN	I	Serial data signal input from MP3 decoder IC
7	MP3 CLK	O	Serial data transfer clock signal output to MP3 decoder IC
8	BYTE	—	Ground pin
9	CNVSS	—	Ground pin
10	XC IN	I	Sub system clock signal input (32.768 kHz)
11	XC OUT	O	Sub system clock signal output (32.768 kHz)
12	RESET	I	System reset signal input from the reset signal IC "L": reset After the power supply rises, "L" is input for several hundreds msec and then change to "H".
13	X OUT	O	Main system clock signal output (16 MHz)
14	VSS	—	Ground pin
15	X IN	I	Main system clock signal input (16 MHz)
16	VCC	—	Power supply pin (+3.3 V)
17	NMI	I	Non-maskable interrupt input
18	MP3RST	O	Reset signal output to MP3 decoder IC
19	SCOR	I	Subcode sync (S0+S1) detection signal input from the digital signal processor
20	AC OUT	I	AC off detection signal input from the reset signal IC "L": AC cut detected
21	SENS	I	Internal status detection monitor signal input from the digital signal processor
22	CD CLK	O	Serial data transfer clock signal output to the digital signal processor
23	XLAT	O	Serial data latch pulse signal output to the digital signal processor
24	CD DATA	O	Serial data signal output to the digital signal processor
25	XRST	O	Reset signal output to the digital signal processor and the motor/coil driver "L": reset
26	XTCN	O	BD DSP oscillation on/off control signal output "H": on
27	FAN CTRL	I	Not used in this set. (Open)
28	STBY RELAY	O	Main power on/off control signal output "H": power on
29	IIC CLK	I/O	Clock signal for IIC communication between master control IC and display control IC
30	IIC DATA	I/O	Data signal for IIC communication between master control IC and display control IC
31	MP3 STB	O	Standby mode signal output to MP3 decoder IC "L": standby mode
32	REC MUTE	O	Recording muting on/off control signal output "L": muting on
33	$\overline{\text{AC CUT MAIN}}$	I	Under voltage protection detection signal input "L": under voltage detected Not used in this set. (Open)
34	LINE MUTE	O	Line muting on/off control signal output "H": muting on
35	VMUTE2	I	Not used in this set. (Open)
36	VMUTE	I	Not used in this set. (Open)
37	SYS RST	I	Not used in this set. (Open)
38	MREQ	I	Not used in this set. (Open)
39	AMS MUTE	O	AMS signal muting on/off control signal output "H": muting on
40	CD POWER	O	Power on/off control signal output "H": power on
41	CD A MUTE	O	CD analog signal muting on/off control signal output "H": power on
42	TSENS	I	Disc tray position detection signal input from CDM
43	DSENS	I	Disc existence detection signal input from CDM

Pin No.	Pin Name	I/O	Pin Description
44	OC SW1	I	Disc tray status detection signal input from CDM
45	CHK SW	I	Disc tray status detection signal input from CDM
46	OC SW2	I	Disc tray status detection signal input from CDM
47	TBL NEG	O	CDM turning motor control signal output
48	TBL POS	O	CDM turning motor control signal output
49	LOD NEG	O	CDM loading motor control signal output
50	LOD POS	O	CDM loading motor control signal output
51	A PLAY	I	Deck A playback detection signal input "H": deck A play
52	A TRG	O	Deck A side trigger plunger drive signal output "H": plunger on
53	A HALF	I	Deck A cassette detection signal input "H": cassette detected
54	CPM CNT2	O	Capstan motor drive signal output
55	REC A	I	Deck B cassette forward side recording tab detection signal input
56	B PLAY	I	Deck B playback detection signal input "H": deck B play
57	B TRG	O	Deck B side trigger plunger drive signal output "H": plunger on
58	REC B	I	Deck B cassette reverse side recording tab detection input
59	TC RELAY	O	Recording/playback selection signal output "H": recording, "L": playback
60	BIAS	O	Recording bias on/off control signal output "H": bias on
61	AMS IN	I	Music detection signal input from automatic music sensor "L": track playback, "H": playback of space between track. Use to detect track change.
62	VCC	—	Power supply pin (+3.3 V)
63	TC MUTE	O	Tape playback muting on/off control signal output "H": muting on
64	VSS	—	Ground pin
65	AUDIO1 DATA	O	Serial data signal output to audio signal processor
66	AUDIO1 CLK	O	Serial data transfer clock signal output to audio signal processor
67	AUDIO2 DATA	O	Serial data signal output to 4-ch volume IC
68	AUDIO2 CLK	O	Serial data transfer clock signal output to 4-ch volume IC
69	ANALOG IN MUTE	O	Soft test signal output Not used in this set. (Open)
70	VIDEO OUT	O	Not used in this set. (Open)
71	C RELAY	I	Not used in this set. (Open)
72	REAR RELAY	O	Relay drive signal output for the surround speakers "H": relay on
73	DISPLAY KEY	I	DISPLAY key press detection signal input (Interrupt input)
74	POWER KEY	I	POWER key press detection signal input (Interrupt input)
75	GC RESET	O	Reset signal output to display control IC "L": reset
76	STBY LED	O	LED drive signal output of POWER indicator "H": LED on
77	HP DET	I	Headphone connection detection signal input "H": headphone connected
78	FR RELAY	O	Relay drive signal output for the front speakers "H": relay on
79	$\overline{\text{HP MUTE}}$	O	Headphone muting on/off control signal output "L": muting on
80	STK MUTE	O	Power amplifier and sub woofer amplifier on/off control signal output "H": amplifier on
81	PROTECT	I	Speaker protect detection signal input from speaker protect circuit "L": protector on
82	ST CLK	O	PLL serial data transfer clock signal output to the tuner unit
83	ST DIN	I	PLL serial data signal input from the tuner unit
84	ST DOUT	O	PLL serial data signal output to the tuner unit
85	ST CE	O	PLL chip enable signal output to the tuner unit
86	TUNED	I	Tuning detection signal input from the tuner unit "L": tuned
87	STEREO	I	FM stereo detection signal input from the tuner unit "L": stereo
88	ST MUTE	O	Tuner muting on/off control signal output "H": muting on

Pin No.	Pin Name	I/O	Pin Description
89	A SHUT	I	Shut off detection signal input from deck A side reel pulse detection (A/D input)
90	B SHUT	I	Shut off detection signal input from deck A side reel pulse detection (A/D input)
91	B HALF	I	Deck B cassette detection signal input "L": cassette detected
92	MODEL IN	I	Model setting pin (A/D input)
93	DEST IN	I	Destination setting pin (A/D input)
94	I HOLD	I	Over voltage protection detection signal input "L": over voltage detected
95	MIC DET	I	BPM value detection for high frequency pin (A/D input)
96	AVSS	—	Ground pin (for A/D conversion)
97	BPM DET LO	I	BPM value detection for high frequency pin (A/D input)
98	VREF	I	A/D converter reference voltage signal input (+3.3 V)
99	AVCC	—	Power supply pin (+3.3 V) (for A/D conversion)
100	MP3 REQ	I	Request signal input from MP3 decoder IC

• IC901 MB90M407PF-G-142-BNDE1 (SYSTEM CONTROL) (PANEL BOARD)

Pin No.	Pin Name	I/O	Pin Description
1 to 4	G4 to G1	O	Grid drive signal output to the fluorescent indicator tube
5 to 10	SEG-1 to SEG-6	O	Segment drive signal output to the fluorescent indicator tube
11	VSS-IO	—	Ground pin (for I/O port)
12 to 22	SEG-7 to SEG-17	O	Segment drive signal output to the fluorescent indicator tube
23	VDD-FIP	—	Power supply pin (+3.3 V) (for fluorescent indicator tube)
24 to 41	SEG-18 to SEG-35	O	Segment drive signal output to the fluorescent indicator tube
42	VSS-IO	—	Ground pin (for I/O port)
43	SEG-36	O	Segment drive signal output to the fluorescent indicator tube
44	TAPE A LED	O	Dynamic LED drive signal output of the TAPE A FWD PLAY indicator and TAPE A REV PLAY indicator "H": LED on
45	SPK MODE LED	O	Dynamic LED drive signal output of the X-ROUND indicator "H": LED on
46	CD LED	O	Dynamic LED drive signal output of the CD PLAY PAUSE indicator "H": LED on
47	GAME, REC LED	O	Dynamic LED drive signal output of the GAME indicator and REC PAUSE indicator "H": LED on
48	VKK	—	Power supply pin (–33 V) (for fluorescent indicator tube)
49	MD0	I	Setting pin for the CPU operational mode
50	MD1/VDD-VFT	I	Setting pin for the CPU operational mode
51	MD2	I	Setting pin for the CPU operational mode
52	VOL 1, 2	O	Dynamic LED drive signal output of the ILLUMINATION 1st indicator and 2nd indicator "H": LED on
53	VOL 3, 4	O	Dynamic LED drive signal output of the ILLUMINATION 3rd indicator and 4th indicator "H": LED on
54	VOL 5, 6	O	Dynamic LED drive signal output of the ILLUMINATION 5th indicator and 6th indicator "H": LED on
55	VOL 7, 8	O	Dynamic LED drive signal output of the ILLUMINATION 7th indicator and 8th indicator "H": LED on
56	VOL 9, 10	O	Dynamic LED drive signal output of the ILLUMINATION 9th indicator and 10th indicator "H": LED on
57	VOL 11, TUNER BAND	O	Dynamic LED drive signal output of the ILLUMINATION 11th indicator and TUNER BAND indicator "H": LED on
58	TAPE B LED	O	Dynamic LED drive signal output of the TAPE B FWD PLAY indicator and TAPE B REV PLAY indicator "H": LED on
59	LED SELECT	O	Dynamic LED drive select signal output "L": LED line ILLUMINATION 1, 3, 5, 7, 9, 11, TAPE B REV PLAY, TAPE A REV PLAY, X-ROUND, CD PLAY PAUSE and GAME is selected. "H": LED line ILLUMINATION 2, 4, 6, 8, 10, TUNER/BAND, REC PAUSE/START, TAPE B FWD PLAY and TAPE A FWD PLAY is selected.
60	I2C DAT	I/O	Clock signal for IIC communication between master control IC and display control IC
61	I2C CLK	I/O	Data signal for IIC communication between master control IC and display control IC
62	AVCC	—	Power supply pin (+3.3 V) (for A/D conversion)
63	AVSS	—	Ground pin (for A/D conversion)
64 to 69	KEY 0 to KEY 5	I	Key signal input (A/D input)
70 to 73	BPF1-F01 to BPF3-F04	I	Spectrum analyzer drive signal input from the spectrum analyzer band-pass filter (A/D input)
74	ALL-BAND	I	Spectrum analyzer drive signal input from the spectrum analyzer band-pass filter (A/D input)

Pin No.	Pin Name	I/O	Pin Description
75	JOG A	I	Jog dial pulse signal input from X-ROUND JOG rotary encoder (B phase input)
76	JOG B	I	Jog dial pulse signal input from X-ROUND JOG rotary encoder (A phase input)
77	RESET	I	System reset signal input from the master control IC "L": reset
78	SOFT TEST	O	Output for the software test point
79	VOL B	I	Jog dial pulse signal input from VOLUME rotary encoder (B phase input)
80	VOL A	I	Jog dial pulse signal input from VOLUME rotary encoder (A phase input)
81	VSS-CPU	—	Ground pin (for CPU)
82	XOUT	O	System clock signal output (4 MHz)
83	XIN	I	System clock signal input (4 MHz)
84	VCC-CPU	—	Power supply pin (+3.3 V) (for CPU)
85	NO USE	—	Not used. (Fixed at "L" in this set.)
86 to 100	G19 to G5	O	Grid drive signal output to the fluorescent indicator tube

SECTION 8
EXPLODED VIEWS

NOTE:
- The mechanical parts with no reference number in the exploded views are not supplied.
- Items marked "*" are not stocked since they are seldom required for routine service. Some delay should be anticipated when ordering these items.
- Abbreviation
  MX : Mexican model
- -XX and -X mean standardized parts, so they may have some difference from the original one.
- Accessories are given in the last of this parts list.

The components identified by mark ⚠ or dotted line with mark ⚠ are critical for safety.
Replace only with part number specified.

8-1. BACK PANEL SECTION

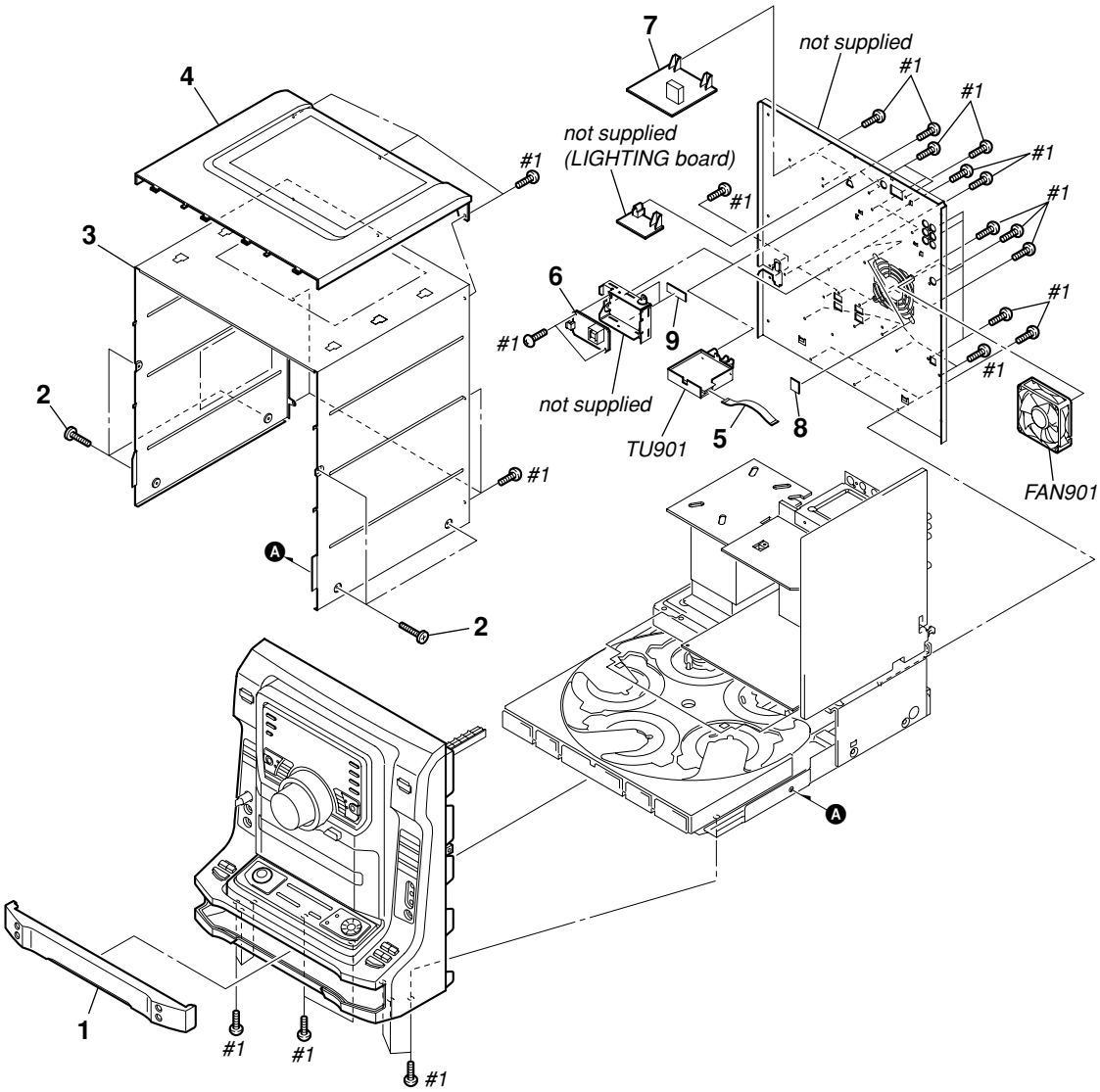

Ref. No.	Part No.	Description	Remark
1	4-252-686-02	LOADING PANEL (US)	
1	4-252-686-21	LOADING PANEL (MX)	
2	3-363-099-02	SCREW (CASE 3 TP2) (US)	
2	3-363-099-32	SCREW (CASE 3 TP2) (MX)	
3	4-237-661-51	CASE	
4	4-252-685-01	COVER (TOP) (US)	
4	4-252-685-21	COVER (TOP) (MX)	
5	1-769-939-11	WIRE (FLAT TYPE) (11 CORE)	
⚠6	1-468-737-51	SWITCHING, POWER (MX)	
⚠6	1-468-737-71	SWITCHING, POWER (US)	
7	1-861-384-11	VOLTAGE SELECTOR BOARD	
8	3-559-407-21	CUSHION, STOPPER (MX)	
8	3-831-441-99	CUSHION, STOPPER (US)	
* 9	3-378-433-01	CUSHION, SARANET	
FAN901	1-763-372-11	FAN, DC	
TU901	1-693-603-11	TUNER (FM/AM) (MX)	
TU901	1-693-623-31	TUNER (FM/AM) (US)	
#1	7-685-646-79	SCREW +BVTP 3X8 TYPE2 N-S	

8-2. FRONT PANEL SECTION (1)

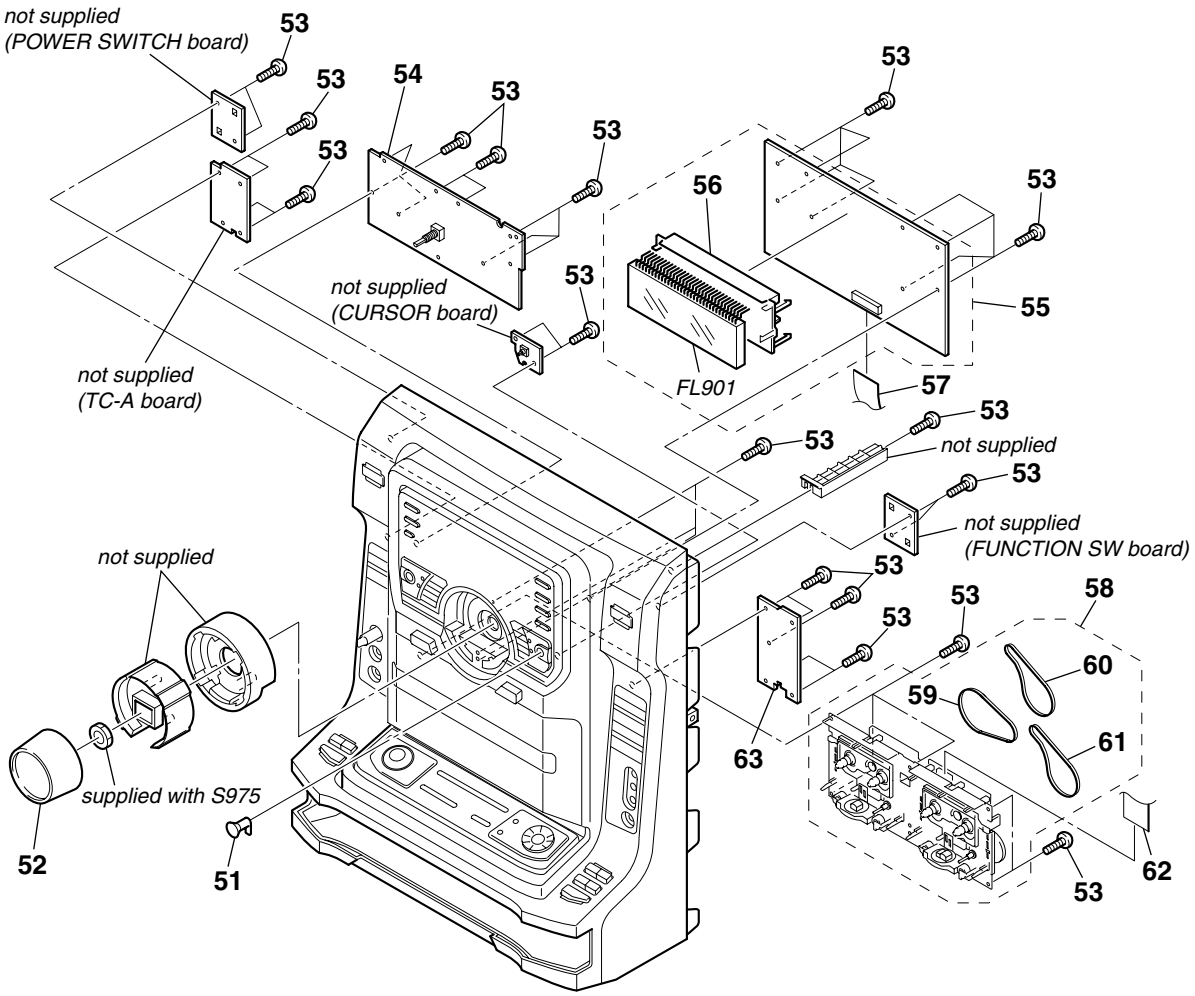

Ref. No.	Part No.	Description	Remark
51	4-252-682-01	KNOB (ENTER)	
52	4-252-684-01	KNOB (VOLUME)	
53	3-087-053-01	+BVTP 2.6 (3CR)	
54	A-1052-687-A	VOL BOARD, COMPLETE (MX)	
54	A-4751-069-A	VOL BOARD, COMPLETE (US)	
55	A-4751-072-A	PANEL BOARD, COMPLETE (US)	
55	A-4753-562-A	PANEL BOARD, COMPLETE (MX)	
56	4-253-178-01	HOLDER, FL	
57	1-773-163-11	WIRE (FLAT TYPE) (21 CORE)	
58	1-796-487-71	DECK, MECHANICAL	
59	4-243-609-01	BELT (AF)	
60	4-243-610-01	BELT (AL)	
61	4-243-608-01	BELT (BR)	
62	1-769-992-11	WIRE (FLAT TYPE) (13 CORE)	
63	A-1052-746-A	TC-B BOARD, COMPLETE (MX)	
63	A-4751-063-A	TC-B BOARD, COMPLETE (US)	
FL901	1-518-978-11	VACUUM FLUORESCENT DISPLAY	

8-3. FRONT PANEL SECTION (2)

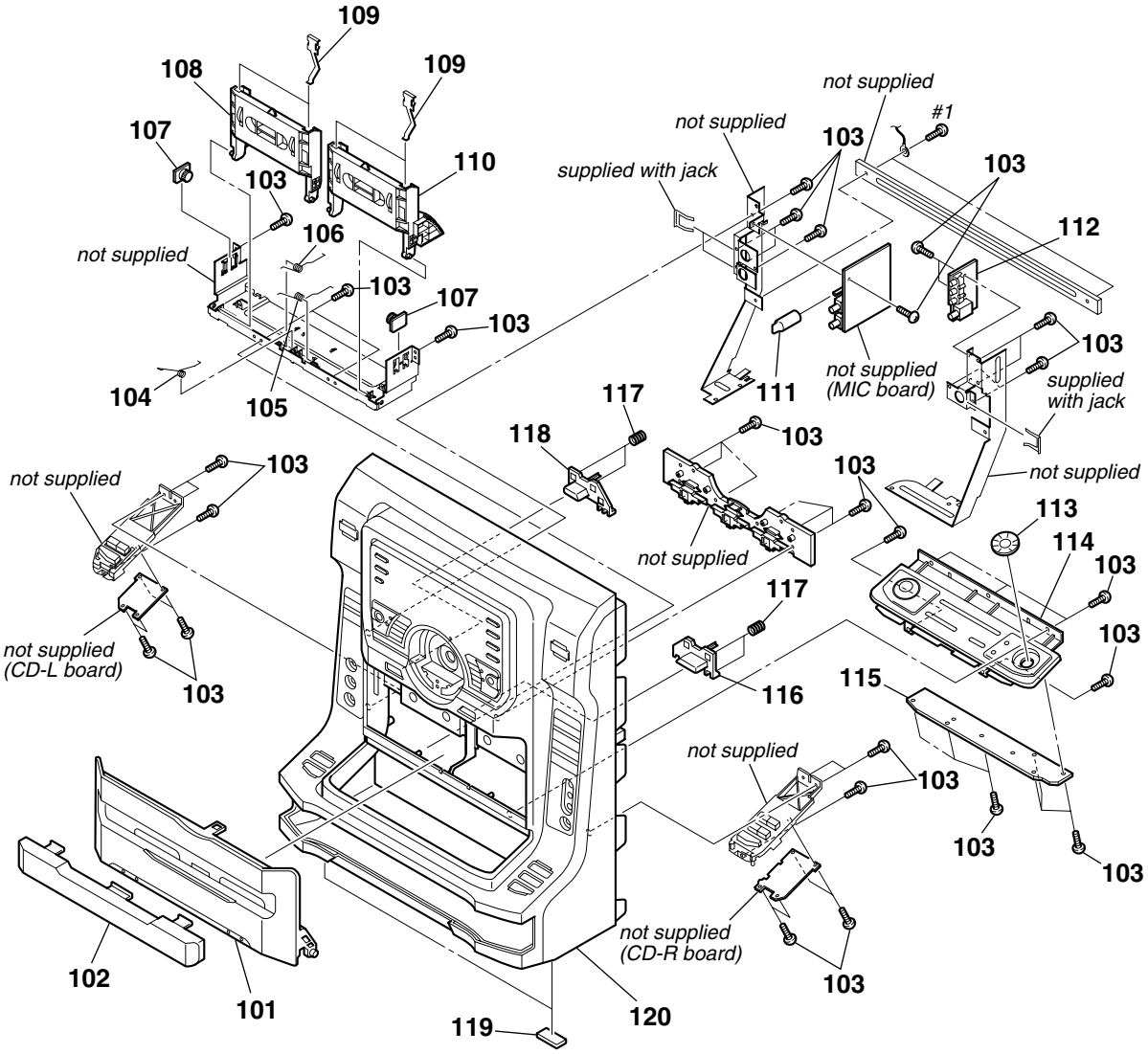

Ref. No.	Part No.	Description	Remark
101	4-252-649-51	LID (TC) (MX)	
101	4-252-649-61	LID (TC) (US)	
102	4-252-650-01	WINDOW (TC)	
103	3-087-053-01	+BVTP 2.6 (3CR)	
104	4-252-677-01	SPRING (LID)	
105	4-252-679-01	SPRING (R)	
106	4-252-678-01	SPRING (L)	
107	4-224-104-11	DAMPER	
108	4-252-651-01	HOLDER (TC-L)	
109	4-959-229-11	DETENT, CASSETTE	
110	4-252-652-01	HOLDER (TC-R)	
111	4-237-635-11	KNOB (MIC)	
112	A-4751-053-A	GAME-IN/HP BOARD, COMPLETE (US)	
112	A-4753-550-A	GAME-IN/HP BOARD, COMPLETE (MX)	

Ref. No.	Part No.	Description	Remark
113	4-252-683-01	KNOB (JOG)	
114	X-2148-524-1	BRACKET CD ASSY (MX)	
114	X-4956-237-1	BRACKET CD ASSY (US)	
115	A-1053-210-A	JOG BOARD, COMPLETE (MX)	
115	A-4751-078-A	JOG BOARD, COMPLETE (US)	
116	4-252-654-02	BUTTON (EJECT-B)	
117	4-254-779-01	SPRING (EJECT)	
118	4-252-653-02	BUTTON (EJECT-A)	
119	4-225-252-21	CUSHION (FOOT)	
120	4-252-633-31	FRONT PANEL (MX)	
120	4-252-633-41	FRONT PANEL (US)	
#1	7-685-646-79	SCREW +BVTP 3X8 TYPE2 N-S	

8-4. CHASSIS SECTION

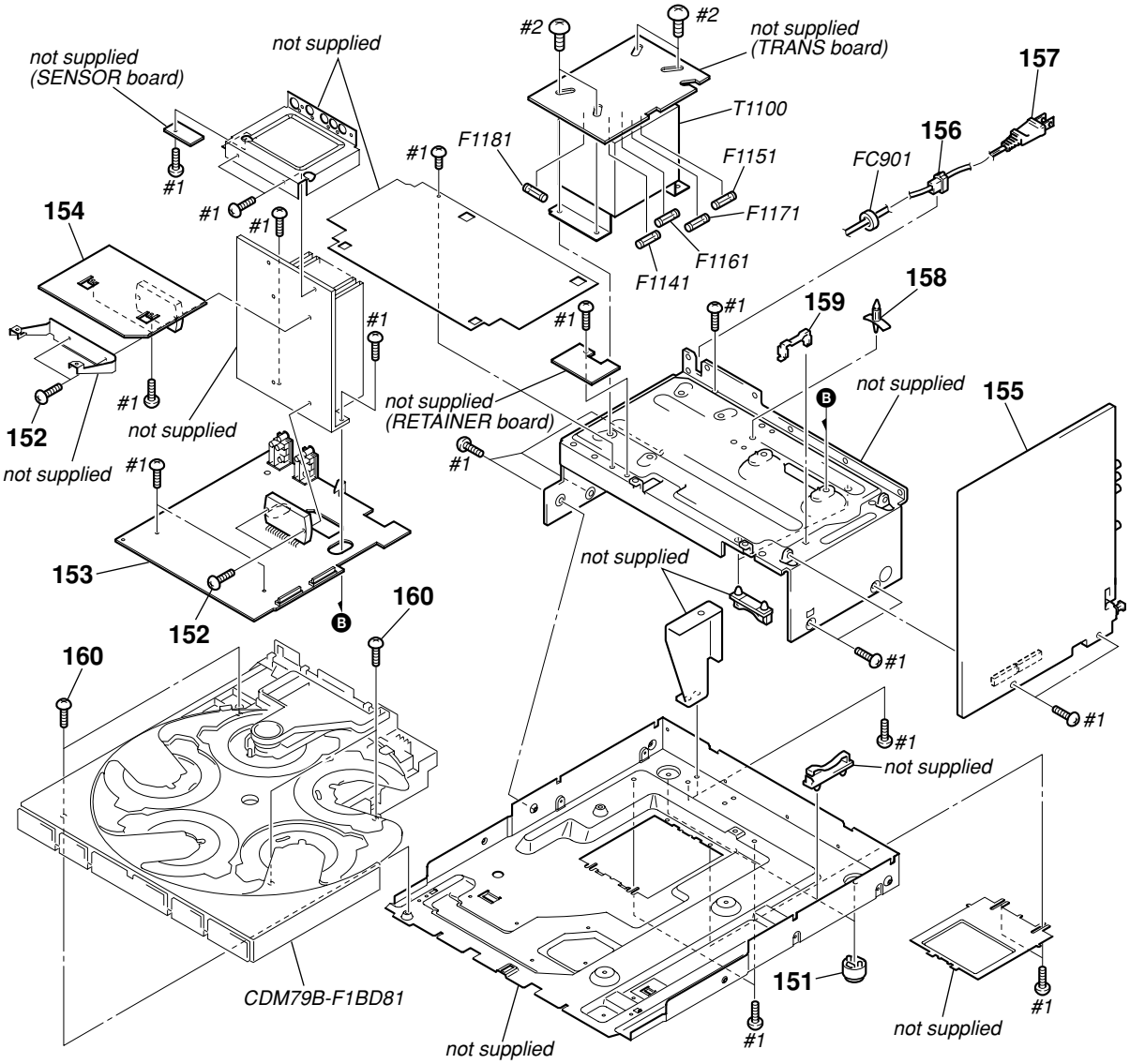

Ref. No.	Part No.	Description	Remark
151	4-965-822-01	FOOT	
152	3-905-609-41	SCREW (TRANSISTOR)	
153	A-4751-050-A	POWER BOARD, COMPLETE (US)	
153	A-4753-555-A	POWER BOARD, COMPLETE (MX)	
154	A-1052-527-A	SURROUND BOARD, COMPLETE (MX)	
154	A-4751-060-A	SURROUND BOARD, COMPLETE (US)	
155	A-1198-352-A	MAIN BOARD, COMPLETE (MX)	
155	A-1227-336-A	MAIN BOARD, COMPLETE (US)	
* 156	3-703-244-00	BUSHING (2104), CORD (US)	
156	3-703-571-11	BUSHING (S) (4516), CORD (MX)	
⚠157	1-783-820-11	CORD, POWER (US)	
⚠157	1-829-627-11	POWER-SUPPLY CORD (MX)	
* 158	4-954-051-41	HOLDER, PC BOARD	
* 159	4-988-533-01	HOLDER, PWB	
160	3-077-331-01	+BV 3 (3-CR)	

Ref. No.	Part No.	Description	Remark
⚠F1141	1-533-949-33	FUSE, CYLINDRICAL (TIME LAG) (8A/250V) (US)	
⚠F1141	1-576-655-12	FUSE, GLASS TUBE (DIA. 5) (8A/250V) (MX)	
⚠F1151	1-533-949-33	FUSE, CYLINDRICAL (TIME LAG) (8A/250V) (US)	
⚠F1151	1-576-655-12	FUSE, GLASS TUBE (DIA. 5) (8A/250V) (MX)	
⚠F1161	1-533-949-33	FUSE, CYLINDRICAL (TIME LAG) (8A/250V) (US)	
⚠F1161	1-576-655-12	FUSE, GLASS TUBE (DIA. 5) (8A/250V) (MX)	
⚠F1171	1-533-949-33	FUSE, CYLINDRICAL (TIME LAG) (8A/250V) (US)	
⚠F1171	1-576-655-12	FUSE, GLASS TUBE (DIA. 5) (8A/250V) (MX)	
⚠F1181	1-532-504-33	FUSE (TIME LAG) (4A/250V) (US)	
⚠F1181	1-533-471-12	FUSE, GLASS TUBE (DIA. 5) (4A/250V) (MX)	
FC901	1-500-868-11	CORE, FERRITE	
⚠T1100	1-443-195-11	TRANSFORMER, POWER (MX)	
⚠T1100	1-445-175-11	TRANSFORMER, POWER (US)	
#1	7-685-646-79	SCREW +BVTP 3X8 TYPE2 N-S	
#2	7-685-881-09	SCREW +BVTT 4X8 (S)	

8-5. CD MECHANISM SECTION (1)

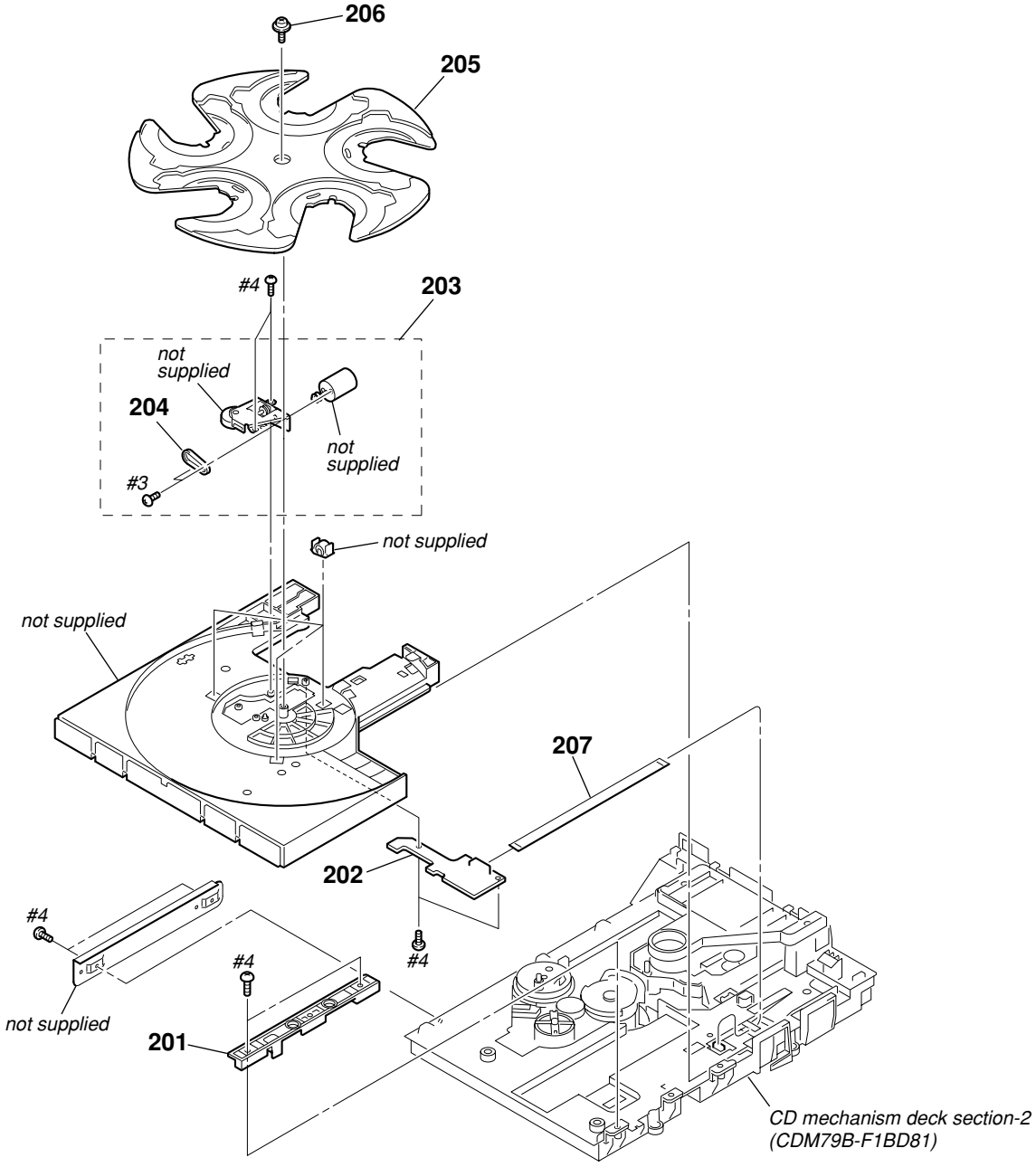

Ref. No.	Part No.	Description	Remark
201	3-074-737-01	PLATE (GUIDE)	
202	A-6060-642-A	SE-130 BOARD, COMPLETE	
203	A-6060-640-B	UNIT ASSY, TD	
204	3-074-725-01	BELT, TD	
205	3-074-717-21	TRAY	
206	4-218-252-52	SCREW (+PTPWH M2.6), FLOATING	
207	1-823-921-11	FMS-18	
#3	7-682-544-04	SCREW +P 3X3	
#4	7-685-534-19	SCREW +BTP 2.6X8 TYPE2 N-S	

8-6. CD MECHANISM SECTION (2)

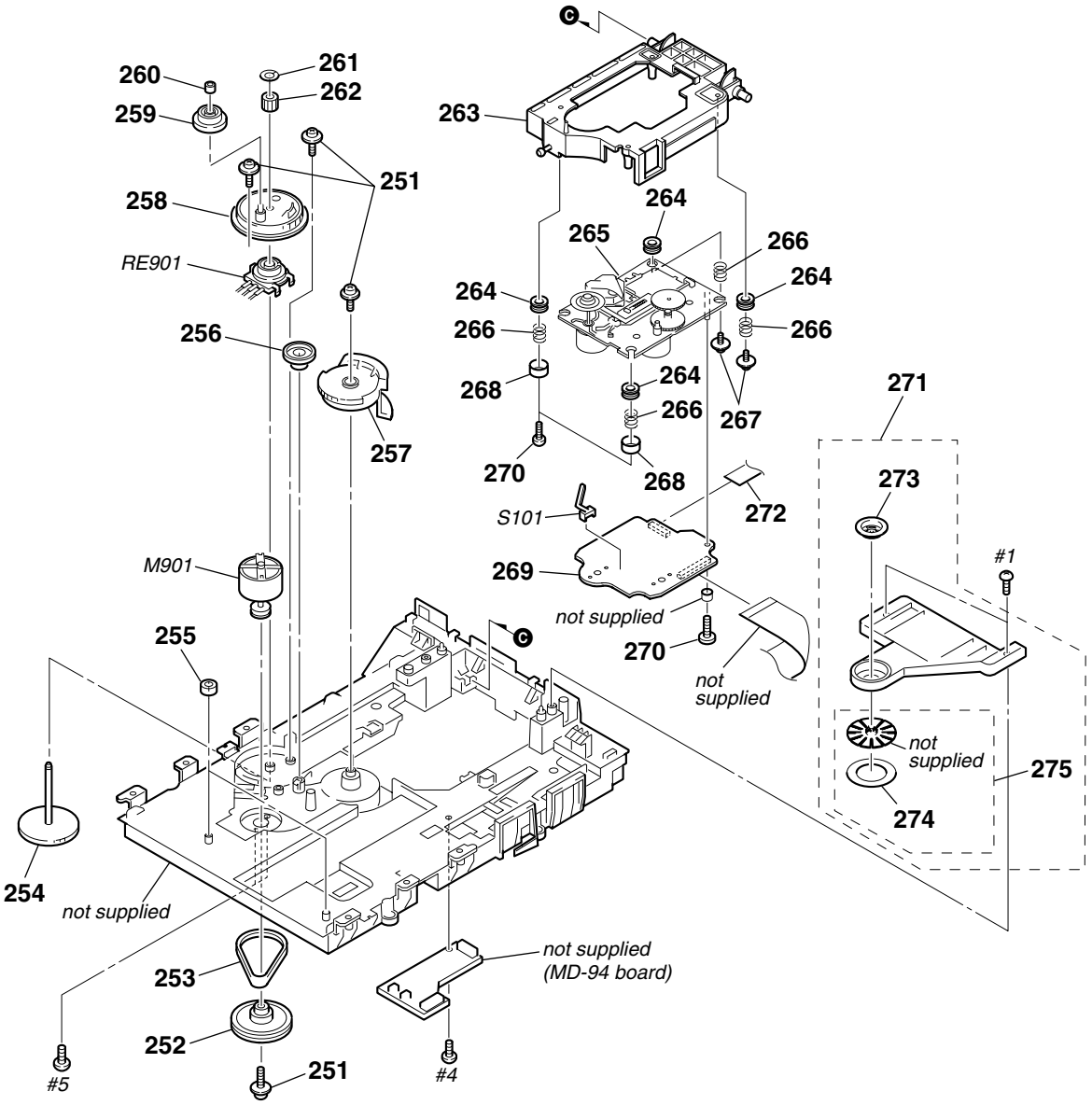

Ref. No.	Part No.	Description	Remark
251	4-218-252-52	SCREW (+PTPWH M2.6), FLOATING	
252	3-074-744-01	GEAR (LOADING A)	
253	3-074-745-01	BELT (LOADING)	
254	3-074-742-01	GEAR (SHAFT)	
255	4-951-619-01	CUSHION (A)	
256	3-074-735-01	GEAR (IDOLER)	
257	3-074-736-01	GEAR (CHUCK)	
258	3-074-741-01	GEAR (LOADING B)	
259	3-074-738-01	GEAR (SWING)	
260	3-074-739-01	COLLAR (SWING)	
261	3-016-533-11	WASHER (FR), STOPPER	
262	3-074-740-01	GEAR (LOADING C)	
263	X-4956-104-A	HOLDER (BU) ASSY	
264	4-227-549-11	INSULATOR	
⚠265	8-820-244-01	OPTICAL PICK-UP (KSM-215DCP/C2NP)	
266	4-227-045-11	SPRING (INSULATOR), COIL	

Ref. No.	Part No.	Description	Remark
267	4-985-672-01	SCREW (+PTPWH M2.6), FLOATING	
268	4-231-151-01	STOPPER (BU)	
269	A-4751-045-A	BD81A BOARD, COMPLETE	
270	3-087-053-01	+BVTP 2.6 (3CR)	
271	A-4713-281-A	CHUCK ASSY	
272	1-832-404-21	CABLE, FLEXIBLE FLAT (16 CORE)	
273	1-452-925-21	MAGNET ASSY	
274	4-231-777-02	SHEET (KH2)	
275	X-4953-195-3	PULLEY (AT) ASSY	
M901	X-3952-411-1	MOTOR ASSY, LOADING (LOADING)	
RE901	1-418-746-11	ENCODER, ROTARY	
S101	1-771-853-11	SWITCH, DETECTION (LIMIT)	
#1	7-685-646-79	SCREW +BVTP 3X8 TYPE2 N-S	
#4	7-685-534-19	SCREW +BTP 2.6X8 TYPE2 N-S	
#5	7-621-259-25	SCREW +P 2.6X4	

SECTION 9
ELECTRICAL PARTS LIST

NOTE:
- Due to standardization, replacements in the parts list may be different from the parts specified in the diagrams or the components used on the set.
- -XX and -X mean standardized parts, so they may have some difference from the original one.
- RESISTORS
  All resistors are in ohms.
  METAL:Metal-film resistor.
  METAL OXIDE: Metal oxide-film resistor.
  F:nonflammable
- Items marked "*" are not stocked since they are seldom required for routine service. Some delay should be anticipated when ordering these items.
- SEMICONDUCTORS
  In each case, u : µ, for example:
  uA.. : µA.. uPA.. : µPA..
  uPB.. : µPB.. uPC.. : µPC.. uPD.. : µPD..
- CAPACITORS
  uF : µF
- COILS
  uH : µH

The components identified by mark ⚠ or dotted line with mark ⚠ are critical for safety.
Replace only with part number specified.

When indicating parts by reference number, please include the board.

- Abbreviation
  MX : Mexican model

Ref. No.	Part No.	Description			Remark
	A-4751-045-A	BD81A BOARD, COMPLETE			
		**********			
		< CAPACITOR >			
C10	1-165-989-11	CERAMIC CHIP	10uF	10%	6.3V
C11	1-165-989-11	CERAMIC CHIP	10uF	10%	6.3V
C14	1-164-360-11	CERAMIC CHIP	0.1uF		16V
C15	1-164-360-11	CERAMIC CHIP	0.1uF		16V
C16	1-115-156-11	CERAMIC CHIP	1uF		10V
C17	1-126-246-11	ELECT CHIP	220uF	20%	4V
C18	1-162-964-11	CERAMIC CHIP	0.001uF	10%	50V
C111	1-162-967-11	CERAMIC CHIP	0.0033uF	10%	50V
C112	1-164-315-11	CERAMIC CHIP	470PF	5%	50V
C113	1-162-967-11	CERAMIC CHIP	0.0033uF	10%	50V
C114	1-164-315-11	CERAMIC CHIP	470PF	5%	50V
C115	1-164-360-11	CERAMIC CHIP	0.1uF		16V
C116	1-128-995-21	ELECT CHIP	100uF	20%	10V
C122	1-107-826-11	CERAMIC CHIP	0.1uF	10%	16V
C123	1-107-826-11	CERAMIC CHIP	0.1uF	10%	16V
C124	1-162-959-11	CERAMIC CHIP	330PF	5%	50V
C125	1-164-360-11	CERAMIC CHIP	0.1uF		16V
C131	1-162-927-11	CERAMIC CHIP	100PF	5%	50V
C132	1-117-863-11	CERAMIC CHIP	0.47uF	10%	6.3V
C133	1-162-970-11	CERAMIC CHIP	0.01uF	10%	25V
C134	1-164-360-11	CERAMIC CHIP	0.1uF		16V
C141	1-107-826-11	CERAMIC CHIP	0.1uF	10%	16V
C142	1-162-965-11	CERAMIC CHIP	0.0015uF	10%	50V
C143	1-164-360-11	CERAMIC CHIP	0.1uF		16V
C151	1-128-995-21	ELECT CHIP	100uF	20%	10V
C161	1-164-360-11	CERAMIC CHIP	0.1uF		16V
C162	1-164-360-11	CERAMIC CHIP	0.1uF		16V
C163	1-164-360-11	CERAMIC CHIP	0.1uF		16V
C171	1-162-919-11	CERAMIC CHIP	22PF	5%	50V
C172	1-162-920-11	CERAMIC CHIP	27PF	5%	50V
C174	1-164-360-11	CERAMIC CHIP	0.1uF		16V
C181	1-164-360-11	CERAMIC CHIP	0.1uF		16V
C182	1-164-360-11	CERAMIC CHIP	0.1uF		16V
C183	1-124-778-00	ELECT CHIP	22uF	20%	6.3V
C184	1-124-778-00	ELECT CHIP	22uF	20%	6.3V
C185	1-164-315-11	CERAMIC CHIP	470PF	5%	50V
C186	1-164-315-11	CERAMIC CHIP	470PF	5%	50V
C194	1-164-360-11	CERAMIC CHIP	0.1uF		16V
C195	1-164-360-11	CERAMIC CHIP	0.1uF		16V
C196	1-164-360-11	CERAMIC CHIP	0.1uF		16V
C201	1-128-995-21	ELECT CHIP	100uF	20%	10V
C203	1-128-995-21	ELECT CHIP	100uF	20%	10V
C209	1-162-970-11	CERAMIC CHIP	0.01uF	10%	25V
C210	1-107-826-11	CERAMIC CHIP	0.1uF	10%	16V
C211	1-164-230-11	CERAMIC CHIP	220PF	5%	50V
C212	1-162-919-11	CERAMIC CHIP	22PF	5%	50V
C213	1-162-919-11	CERAMIC CHIP	22PF	5%	50V
C251	1-162-969-11	CERAMIC CHIP	0.0068uF	10%	25V
C252	1-164-360-11	CERAMIC CHIP	0.1uF		16V
C255	1-164-360-11	CERAMIC CHIP	0.1uF		16V
C257	1-164-360-11	CERAMIC CHIP	0.1uF		16V
C258	1-164-360-11	CERAMIC CHIP	0.1uF		16V
C259	1-164-360-11	CERAMIC CHIP	0.1uF		16V
C260	1-128-394-11	ELECT CHIP	220uF	20%	10V
C302	1-164-360-11	CERAMIC CHIP	0.1uF		16V
C303	1-164-360-11	CERAMIC CHIP	0.1uF		16V
C305	1-126-246-11	ELECT CHIP	220uF	20%	4V
C306	1-164-360-11	CERAMIC CHIP	0.1uF		16V
C307	1-164-360-11	CERAMIC CHIP	0.1uF		16V
C308	1-126-208-21	ELECT CHIP	47uF	20%	4V
C309	1-164-360-11	CERAMIC CHIP	0.1uF		16V
C310	1-164-360-11	CERAMIC CHIP	0.1uF		16V
C311	1-164-360-11	CERAMIC CHIP	0.1uF		16V
C312	1-164-360-11	CERAMIC CHIP	0.1uF		16V
C313	1-164-360-11	CERAMIC CHIP	0.1uF		16V
C314	1-126-208-21	ELECT CHIP	47uF	20%	4V
C315	1-107-826-11	CERAMIC CHIP	0.1uF	10%	16V
C316	1-162-966-11	CERAMIC CHIP	0.0022uF	10%	50V
C317	1-162-970-11	CERAMIC CHIP	0.01uF	10%	25V
C318	1-162-970-11	CERAMIC CHIP	0.01uF	10%	25V
C320	1-216-864-11	SHORT CHIP	0		
		< CONNECTOR >			
CN101	1-770-425-51	CONNECTOR, FFC/FPC 16P			
CN201	1-818-350-51	CONNECTOR, FFC (LIF(NON-ZIF)) 27P			
		< FERRITE BEAD >			
FB301	1-500-445-21	FERRITE, EMI (SMD) (2012)			
		< IC >			
IC101	8-752-425-12	IC CXD3059AR			
IC251	6-705-808-01	IC BA5947FM-E2			
IC301	6-705-365-01	IC TC94A34FG-002			
IC303	6-705-807-01	IC BH15FB1WG			

BD81A CD-L CD-R

Ref. No.	Part No.	Description			Remark
		< TRANSISTOR >			
Q10	6-551-120-01	TRANSISTOR 2SA2119K			
		< RESISTOR >			
R10	1-216-791-11	METAL CHIP	3.3	5%	1/10W
R11	1-216-864-11	SHORT CHIP	0		
R12	1-216-845-11	METAL CHIP	100K	5%	1/10W
R13	1-218-446-11	METAL CHIP	1	5%	1/10W
R111	1-216-821-11	METAL CHIP	1K	5%	1/10W
R112	1-216-835-11	METAL CHIP	15K	5%	1/10W
R113	1-216-821-11	METAL CHIP	1K	5%	1/10W
R114	1-216-835-11	METAL CHIP	15K	5%	1/10W
R121	1-216-835-11	METAL CHIP	15K	5%	1/10W
R131	1-216-857-11	METAL CHIP	1M	5%	1/10W
R132	1-216-833-11	METAL CHIP	10K	5%	1/10W
R133	1-216-848-11	METAL CHIP	180K	5%	1/10W
R141	1-216-829-11	METAL CHIP	4.7K	5%	1/10W
R142	1-216-821-11	METAL CHIP	1K	5%	1/10W
R143	1-216-827-11	METAL CHIP	3.3K	5%	1/10W
R151	1-216-864-11	SHORT CHIP	0		
R161	1-216-809-11	METAL CHIP	100	5%	1/10W
R162	1-216-841-11	METAL CHIP	47K	5%	1/10W
R163	1-216-809-11	METAL CHIP	100	5%	1/10W
R165	1-216-864-11	SHORT CHIP	0		
R171	1-216-817-11	METAL CHIP	470	5%	1/10W
R172	1-216-857-11	METAL CHIP	1M	5%	1/10W
R173	1-216-295-11	SHORT CHIP	0		
R181	1-216-809-11	METAL CHIP	100	5%	1/10W
R182	1-216-809-11	METAL CHIP	100	5%	1/10W
R191	1-216-864-11	SHORT CHIP	0		
R201	1-500-445-21	FERRITE, EMI (SMD) (2012)			
R203	1-216-864-11	SHORT CHIP	0		
R204	1-500-445-21	FERRITE, EMI (SMD) (2012)			
R205	1-216-864-11	SHORT CHIP	0		
R251	1-216-833-11	METAL CHIP	10K	5%	1/10W
R252	1-216-837-11	METAL CHIP	22K	5%	1/10W
R253	1-216-833-11	METAL CHIP	10K	5%	1/10W
R301	1-216-845-11	METAL CHIP	100K	5%	1/10W
R302	1-216-833-11	METAL CHIP	10K	5%	1/10W
R303	1-216-845-11	METAL CHIP	100K	5%	1/10W
R305	1-216-845-11	METAL CHIP	100K	5%	1/10W
R306	1-216-864-11	SHORT CHIP	0		
R307	1-216-833-11	METAL CHIP	10K	5%	1/10W
R313	1-216-813-11	METAL CHIP	220	5%	1/10W
R351	1-216-809-11	METAL CHIP	100	5%	1/10W
R352	1-216-809-11	METAL CHIP	100	5%	1/10W
R353	1-216-809-11	METAL CHIP	100	5%	1/10W
R354	1-216-809-11	METAL CHIP	100	5%	1/10W
R401	1-216-809-11	METAL CHIP	100	5%	1/10W
R402	1-216-809-11	METAL CHIP	100	5%	1/10W
R403	1-216-809-11	METAL CHIP	100	5%	1/10W
R404	1-216-809-11	METAL CHIP	100	5%	1/10W
R405	1-216-809-11	METAL CHIP	100	5%	1/10W
R406	1-216-809-11	METAL CHIP	100	5%	1/10W
R407	1-216-809-11	METAL CHIP	100	5%	1/10W
R408	1-216-809-11	METAL CHIP	100	5%	1/10W
R409	1-216-809-11	METAL CHIP	100	5%	1/10W
R410	1-216-809-11	METAL CHIP	100	5%	1/10W
R411	1-216-809-11	METAL CHIP	100	5%	1/10W
R412	1-216-809-11	METAL CHIP	100	5%	1/10W
R419	1-216-809-11	METAL CHIP	100	5%	1/10W
		< VIBRATOR >			
X171	1-767-408-21	VIBRATOR, CRYSTAL (16.9344MHz)			

****

CD-L BOARD
****

		< CONNECTOR >			
CN911	1-564-718-11	PIN, CONNECTOR (SMALL TYPE) 2P			
		< RESISTOR >			
R834	1-216-835-11	METAL CHIP	15K	5%	1/10W
R866	1-216-839-11	METAL CHIP	33K	5%	1/10W
R896	1-216-837-11	METAL CHIP	22K	5%	1/10W
		< SWITCH >			
S937	1-771-410-21	SWITCH, TACTILE (EDIT)			
S938	1-771-410-21	SWITCH, TACTILE (REPEAT)			
S939	1-771-410-21	SWITCH, TACTILE (PLAY MODE)			

****

CD-R BOARD
****

		< DIODE >			
D926	8-719-060-27	LED SLR-325MCT31 (▶II)			
		< TRANSISTOR >			
Q917	8-729-027-43	TRANSISTOR DTC114EKA-T146			
		< RESISTOR >			
R872	1-216-827-11	METAL CHIP	3.3K	5%	1/10W
R873	1-216-829-11	METAL CHIP	4.7K	5%	1/10W
R874	1-218-867-11	METAL CHIP	6.8K	0.5%	1/10W
R875	1-216-833-11	METAL CHIP	10K	5%	1/10W
R876	1-216-835-11	METAL CHIP	15K	5%	1/10W
R877	1-216-837-11	METAL CHIP	22K	5%	1/10W
R878	1-216-819-11	METAL CHIP	680	5%	1/10W
R879	1-216-819-11	METAL CHIP	680	5%	1/10W
R881	1-216-809-11	METAL CHIP	100	5%	1/10W
		< SWITCH >			
S950	1-771-410-21	SWITCH, TACTILE (▷▷)			
S951	1-771-410-21	SWITCH, TACTILE (◁◁)			
S952	1-771-410-21	SWITCH, TACTILE (▶▶I)			
S953	1-771-410-21	SWITCH, TACTILE (I◀◀)			
S954	1-771-410-21	SWITCH, TACTILE (■)			
S955	1-771-410-21	SWITCH, TACTILE (▶II)			

****

Ref. No.	Part No.	Description			Remark
		CURSOR BOARD			
		**********			
		< RESISTOR >			
R978	1-216-833-11	METAL CHIP	10K	5%	1/10W
R979	1-216-835-11	METAL CHIP	15K	5%	1/10W
R980	1-216-837-11	METAL CHIP	22K	5%	1/10W
R981	1-216-839-11	METAL CHIP	33K	5%	1/10W
R982	1-216-843-11	METAL CHIP	68K	5%	1/10W
		< SWITCH >			
S970	1-771-879-11	SWITCH, TACTILE (ENTER)			
**********					
		FUNCTION SW BOARD			
		**********			
		< RESISTOR >			
R832	1-216-837-11	METAL CHIP	22K	5%	1/10W
		< SWITCH >			
S930	1-771-410-21	SWITCH, TACTILE (FUNCTION)			
**********					
	A-4753-550-A	GAME-IN/HP BOARD, COMPLETE			
		**********			
		< CAPACITOR >			
C840	1-107-826-11	CERAMIC CHIP	0.1uF	10%	16V
C841	1-216-864-11	SHORT CHIP	0		
C842	1-216-864-11	SHORT CHIP	0		
		< CONNECTOR >			
* CN801	1-564-720-11	PIN, CONNECTOR (SMALL TYPE) 4P			
CN802	1-785-328-11	PIN, CONNECTOR (LIGHT ANGLE) 2P			
CN803	1-564-719-11	PIN, CONNECTOR (SMALL TYPE) 3P			
		< GROUND TERMINAL >			
EPT803	1-537-738-21	TERMINAL, GROUND			
EPT804	1-537-738-21	TERMINAL, GROUND			
		< JACK >			
J850	1-764-592-11	JACK, PIN 3P (GAME INPUT VIDEO,AUDIO L/R)			
J851	1-770-226-11	JACK (LARGE TYPE) (PHONES)			
		< RESISTOR >			
R826	1-216-809-11	METAL CHIP	100	5%	1/10W
R827	1-216-845-11	METAL CHIP	100K	5%	1/10W
R828	1-216-845-11	METAL CHIP	100K	5%	1/10W
R829	1-216-821-11	METAL CHIP	1K	5%	1/10W
R830	1-216-821-11	METAL CHIP	1K	5%	1/10W
**********					
	A-1053-210-A	JOG BOARD, COMPLETE (MX)			
	A-4751-078-A	JOG BOARD, COMPLETE (US)			
		**********			
		< CAPACITOR >			
C964	1-162-970-11	CERAMIC CHIP	0.01uF	10%	25V
C965	1-162-970-11	CERAMIC CHIP	0.01uF	10%	25V
		< DIODE >			
D925	8-719-061-96	LED SLR-325DCT31 (X-ROUND ON/OFF)			
		< TRANSISTOR >			
Q916	8-729-027-43	TRANSISTOR DTC114EKA-T146			
		< RESISTOR >			
R871	1-216-809-11	METAL CHIP	100	5%	1/10W
R882	1-216-819-11	METAL CHIP	680	5%	1/10W
R883	1-216-817-11	METAL CHIP	470	5%	1/10W
R884	1-216-821-11	METAL CHIP	1K	5%	1/10W
R885	1-216-823-11	METAL CHIP	1.5K	5%	1/10W
R886	1-216-823-11	METAL CHIP	1.5K	5%	1/10W
R887	1-216-825-11	METAL CHIP	2.2K	5%	1/10W
R888	1-216-819-11	METAL CHIP	680	5%	1/10W
R889	1-216-827-11	METAL CHIP	3.3K	5%	1/10W
R890	1-216-819-11	METAL CHIP	680	5%	1/10W
R891	1-216-829-11	METAL CHIP	4.7K	5%	1/10W
R893	1-218-867-11	METAL CHIP	6.8K	0.5%	1/10W
R894	1-216-833-11	METAL CHIP	10K	5%	1/10W
R895	1-216-835-11	METAL CHIP	15K	5%	1/10W
		< SWITCH >			
S956	1-771-410-21	SWITCH, TACTILE (DISC 1)			
S957	1-478-133-11	ENCODER, ROTARY (JOG)			
S958	1-771-410-21	SWITCH, TACTILE (DISC 2)			
S959	1-771-410-21	SWITCH, TACTILE (DISC 3)			
S960	1-771-410-21	SWITCH, TACTILE (DISC 4)			
S961	1-771-410-21	SWITCH, TACTILE (DISC 5)			
S962	1-771-410-21	SWITCH, TACTILE (⏏ OPEN/CLOSE)			
S963	1-771-410-21	SWITCH, TACTILE (EX-CHANGE)			
S964	1-771-410-21	SWITCH, TACTILE (DISC SKIP)			
S965	1-771-410-21	SWITCH, TACTILE (FLASH)			
S966	1-771-410-21	SWITCH, TACTILE (MODE SPEAKER)			
S967	1-771-410-21	SWITCH, TACTILE (X-ROUND ON/OFF)			
**********					
		LIGHTING BOARD			
		**********			
		< CAPACITOR >			
C06	1-162-970-11	CERAMIC CHIP	0.01uF	10%	25V
C07	1-164-156-11	CERAMIC CHIP	0.1uF		25V
		< CONNECTOR >			
CN01	1-564-705-11	PIN, CONNECTOR (SMALL TYPE) 3P			
		< DIODE >			
D01	6-501-193-01	DIODE 1SS355WTE-17			
D02	6-501-193-01	DIODE 1SS355WTE-17			
D03	8-719-083-60	DIODE UDZSTE-174.7B			
		< CONNECTOR >			
J01	1-820-048-11	CONNECTOR (LIGHTING)			

Ref. No.	Part No.	Description			Remark
		< TRANSISTOR >			
Q01	8-729-056-46	TRANSISTOR 2SC5053T100Q			
		< RESISTOR >			
R01	1-216-809-11	METAL CHIP	100	5%	1/10W
R03	1-216-819-11	METAL CHIP	680	5%	1/10W
R05	1-216-864-11	SHORT CHIP	0		
**********					
	A-1198-352-A	MAIN BOARD, COMPLETE (MX)			
	A-1227-336-A	MAIN BOARD, COMPLETE (US)			
		**********			
	7-685-646-79	SCREW +BVTP 3X8 TYPE2 N-S			
		< CAPACITOR >			
C101	1-126-964-11	ELECT	10uF	20%	50V
C102	1-126-964-11	ELECT	10uF	20%	50V
C103	1-126-964-11	ELECT	10uF	20%	50V
C104	1-126-964-11	ELECT	10uF	20%	50V
C105	1-126-964-11	ELECT	10uF	20%	50V
C106	1-126-960-11	ELECT	1uF	20%	50V
C107	1-164-156-11	CERAMIC CHIP	0.1uF		25V
C108	1-126-947-11	ELECT	47uF	20%	35V
C109	1-162-960-11	CERAMIC CHIP	220PF	10%	50V
C110	1-126-964-11	ELECT	10uF	20%	50V
C111	1-126-959-11	ELECT	0.47uF	20%	50V
C112	1-126-964-11	ELECT	10uF	20%	50V
C115	1-164-156-11	CERAMIC CHIP	0.1uF		25V
C116	1-126-933-11	ELECT	100uF	20%	16V
C117	1-126-961-11	ELECT	2.2uF	20%	50V
C118	1-164-227-11	CERAMIC CHIP	0.022uF	10%	25V
C119	1-164-227-11	CERAMIC CHIP	0.022uF	10%	25V
C120	1-126-964-11	ELECT	10uF	20%	50V
C121	1-100-436-11	CERAMIC CHIP	0.033uF	10%	25V
C122	1-162-968-11	CERAMIC CHIP	0.0047uF	10%	50V
C123	1-162-961-11	CERAMIC CHIP	330PF	10%	50V
C124	1-126-964-11	ELECT	10uF	20%	50V
C126	1-162-963-11	CERAMIC CHIP	680PF	10%	50V
C128	1-126-959-11	ELECT	0.47uF	20%	50V
C133	1-162-963-11	CERAMIC CHIP	680PF	10%	50V
C134	1-162-963-11	CERAMIC CHIP	680PF	10%	50V
C135	1-162-960-11	CERAMIC CHIP	220PF	10%	50V
C136	1-162-960-11	CERAMIC CHIP	220PF	10%	50V
C137	1-162-970-11	CERAMIC CHIP	0.01uF	10%	25V
C138	1-137-194-81	FILM	0.47uF	5%	50V
C139	1-162-964-11	CERAMIC CHIP	0.001uF	10%	50V
C140	1-136-170-00	FILM	0.27uF	5%	50V
C141	1-162-970-11	CERAMIC CHIP	0.01uF	10%	25V
C142	1-162-970-11	CERAMIC CHIP	0.01uF	10%	25V
C143	1-162-968-11	CERAMIC CHIP	0.0047uF	10%	50V
C144	1-100-436-11	CERAMIC CHIP	0.033uF	10%	25V
C145	1-126-964-11	ELECT	10uF	20%	50V
C146	1-164-227-11	CERAMIC CHIP	0.022uF	10%	25V
C147	1-164-227-11	CERAMIC CHIP	0.022uF	10%	25V
C148	1-126-961-11	ELECT	2.2uF	20%	50V
C149	1-162-964-11	CERAMIC CHIP	0.001uF	10%	50V
C150	1-164-156-11	CERAMIC CHIP	0.1uF		25V
C151	1-162-970-11	CERAMIC CHIP	0.01uF	10%	25V
C152	1-137-427-11	MYLAR	120PF	5%	50V
C153	1-126-964-11	ELECT	10uF	20%	50V
C154	1-137-427-11	MYLAR	120PF	5%	50V
C155	1-136-495-11	FILM	0.068uF	5%	50V
C156	1-162-966-11	CERAMIC CHIP	0.0022uF	10%	50V
C157	1-162-966-11	CERAMIC CHIP	0.0022uF	10%	50V
C158	1-137-194-81	FILM	0.47uF	5%	50V
C159	1-126-964-11	ELECT	10uF	20%	50V
C160	1-126-960-11	ELECT	1uF	20%	50V
C161	1-126-964-11	ELECT	10uF	20%	50V
C162	1-126-964-11	ELECT	10uF	20%	50V
C163	1-126-964-11	ELECT	10uF	20%	50V
C164	1-126-964-11	ELECT	10uF	20%	50V
C165	1-126-964-11	ELECT	10uF	20%	50V
C166	1-126-964-11	ELECT	10uF	20%	50V
C167	1-126-960-11	ELECT	1uF	20%	50V
C168	1-130-483-00	MYLAR	0.01uF	5%	50V
C169	1-126-947-11	ELECT	47uF	20%	35V
C170	1-162-961-11	CERAMIC CHIP	330PF	10%	50V
C171	1-136-170-00	FILM	0.27uF	5%	50V
C172	1-126-933-11	ELECT	100uF	20%	16V
C173	1-126-933-11	ELECT	100uF	20%	16V
C174	1-126-935-11	ELECT	470uF	20%	16V
C175	1-137-194-81	FILM	0.47uF	5%	50V
C176	1-162-963-11	CERAMIC CHIP	680PF	10%	50V
C177	1-126-947-11	ELECT	47uF	20%	35V
C178	1-126-960-11	ELECT	1uF	20%	50V
C179	1-130-483-00	MYLAR	0.01uF	5%	50V
C180	1-126-964-11	ELECT	10uF	20%	50V
C182	1-162-974-11	CERAMIC CHIP	0.01uF		50V
C186	1-162-968-11	CERAMIC CHIP	0.0047uF	10%	50V
C187	1-162-968-11	CERAMIC CHIP	0.0047uF	10%	50V
C191	1-137-150-11	FILM	0.01uF	5%	100V
C192	1-162-968-11	CERAMIC CHIP	0.0047uF	10%	50V
C194	1-130-481-00	MYLAR	0.0068uF	5%	50V
C195	1-126-965-11	ELECT	22uF	20%	50V
C196	1-126-947-11	ELECT	47uF	20%	35V
C200	1-104-658-11	ELECT	100uF	20%	10V
C204	1-126-964-11	ELECT	10uF	20%	50V
C205	1-126-964-11	ELECT	10uF	20%	50V
C219	1-104-658-11	ELECT	100uF	20%	10V
C220	1-137-189-11	FILM	0.18uF	5%	50V
C221	1-137-193-11	FILM	0.39uF	5%	50V
C222	1-137-189-11	FILM	0.18uF	5%	50V
C223	1-137-193-11	FILM	0.39uF	5%	50V
C226	1-162-964-11	CERAMIC CHIP	0.001uF	10%	50V
C227	1-162-964-11	CERAMIC CHIP	0.001uF	10%	50V
C233	1-126-964-11	ELECT	10uF	20%	50V
C235	1-126-964-11	ELECT	10uF	20%	50V
C236	1-162-964-11	CERAMIC CHIP	0.001uF	10%	50V
C237	1-126-964-11	ELECT	10uF	20%	50V
C238	1-162-964-11	CERAMIC CHIP	0.001uF	10%	50V
C241	1-126-964-11	ELECT	10uF	20%	50V
C242	1-162-960-11	CERAMIC CHIP	220PF	10%	50V
C243	1-162-960-11	CERAMIC CHIP	220PF	10%	50V
C251	1-126-923-11	ELECT	220uF	20%	10V
C300	1-162-970-11	CERAMIC CHIP	0.01uF	10%	25V

Ref. No.	Part No.	Description			Remark
C301	1-164-156-11	CERAMIC CHIP	0.1uF		25V
C302	1-126-947-11	ELECT	47uF	20%	35V
C303	1-164-156-11	CERAMIC CHIP	0.1uF		25V
C304	1-162-970-11	CERAMIC CHIP	0.01uF	10%	25V
C305	1-164-156-11	CERAMIC CHIP	0.1uF		25V
C306	1-126-947-11	ELECT	47uF	20%	35V
C307	1-164-156-11	CERAMIC CHIP	0.1uF		25V
C318	1-126-964-11	ELECT	10uF	20%	50V
C319	1-126-964-11	ELECT	10uF	20%	50V
C320	1-164-156-11	CERAMIC CHIP	0.1uF		25V
C321	1-164-156-11	CERAMIC CHIP	0.1uF		25V
C322	1-126-925-11	ELECT	470uF	20%	10V
C324	1-164-156-11	CERAMIC CHIP	0.1uF		25V
C325	1-164-156-11	CERAMIC CHIP	0.1uF		25V
C328	1-162-960-11	CERAMIC CHIP	220PF	10%	50V
C329	1-162-923-11	CERAMIC CHIP	47PF	5%	50V
C341	1-100-566-11	CERAMIC CHIP	0.1uF	10%	25V
C342	1-126-916-11	ELECT	1000uF	20%	6.3V
C386	1-164-227-11	CERAMIC CHIP	0.022uF	10%	25V
C387	1-164-227-11	CERAMIC CHIP	0.022uF	10%	25V
C395	1-164-156-11	CERAMIC CHIP	0.1uF		25V
C402	1-126-964-11	ELECT	10uF	20%	50V
C403	1-136-497-81	FILM	0.1uF	5%	50V
C404	1-136-497-81	FILM	0.1uF	5%	50V
C410	1-162-919-11	CERAMIC CHIP	22PF	5%	50V
C411	1-162-917-11	CERAMIC CHIP	15PF	5%	50V
C412	1-164-156-11	CERAMIC CHIP	0.1uF		25V
C414	1-164-156-11	CERAMIC CHIP	0.1uF		25V
C416	1-126-916-11	ELECT	1000uF	20%	6.3V
C462	1-104-658-11	ELECT	100uF	20%	10V
C464	1-162-970-11	CERAMIC CHIP	0.01uF	10%	25V
C497	1-164-156-11	CERAMIC CHIP	0.1uF		25V
C498	1-126-964-11	ELECT	10uF	20%	50V
C499	1-164-156-11	CERAMIC CHIP	0.1uF		25V
C500	1-126-947-11	ELECT	47uF	20%	35V
C501	1-162-970-11	CERAMIC CHIP	0.01uF	10%	25V
C502	1-126-947-11	ELECT	47uF	20%	35V
C503	1-136-159-00	FILM	0.033uF	5%	50V
C504	1-136-159-00	FILM	0.033uF	5%	50V
C505	1-162-970-11	CERAMIC CHIP	0.01uF	10%	25V
C506	1-126-933-11	ELECT	100uF	20%	16V
C507	1-130-473-00	MYLAR	0.0015uF	5%	50V
C508	1-130-473-00	MYLAR	0.0015uF	5%	50V
C509	1-130-479-00	MYLAR	0.0047uF	5%	50V
C510	1-130-479-00	MYLAR	0.0047uF	5%	50V
C511	1-162-953-11	CERAMIC CHIP	100PF	5%	50V
C512	1-126-961-11	ELECT	2.2uF	20%	50V
C513	1-126-961-11	ELECT	2.2uF	20%	50V
C514	1-162-953-11	CERAMIC CHIP	100PF	5%	50V
C515	1-126-964-11	ELECT	10uF	20%	50V
C516	1-126-964-11	ELECT	10uF	20%	50V
C517	1-162-953-11	CERAMIC CHIP	100PF	5%	50V
C518	1-162-953-11	CERAMIC CHIP	100PF	5%	50V
C519	1-162-957-11	CERAMIC CHIP	220PF	5%	50V
C520	1-162-957-11	CERAMIC CHIP	220PF	5%	50V
C521	1-162-961-11	CERAMIC CHIP	330PF	10%	50V
C522	1-162-961-11	CERAMIC CHIP	330PF	10%	50V
C523	1-162-957-11	CERAMIC CHIP	220PF	5%	50V
C524	1-162-957-11	CERAMIC CHIP	220PF	5%	50V
C525	1-126-964-11	ELECT	10uF	20%	50V
C526	1-126-964-11	ELECT	10uF	20%	50V
C527	1-164-156-11	CERAMIC CHIP	0.1uF		25V
C528	1-164-156-11	CERAMIC CHIP	0.1uF		25V
C529	1-164-156-11	CERAMIC CHIP	0.1uF		25V
C530	1-126-963-11	ELECT	4.7uF	20%	50V
C531	1-126-963-11	ELECT	4.7uF	20%	50V
C532	1-126-960-11	ELECT	1uF	20%	50V
C533	1-126-960-11	ELECT	1uF	20%	50V
C534	1-126-960-11	ELECT	1uF	20%	50V
C535	1-126-960-11	ELECT	1uF	20%	50V
C538	1-126-960-11	ELECT	1uF	20%	50V
C539	1-126-960-11	ELECT	1uF	20%	50V
C543	1-107-714-11	ELECT	10uF	20%	50V
C555	1-104-658-11	ELECT	100uF	20%	10V
C586	1-164-156-11	CERAMIC CHIP	0.1uF		25V
C587	1-164-156-11	CERAMIC CHIP	0.1uF		25V
C590	1-128-548-11	ELECT	4700uF	20%	25V
C591	1-104-658-11	ELECT	100uF	20%	10V
C593	1-126-933-11	ELECT	100uF	20%	16V
C594	1-164-156-11	CERAMIC CHIP	0.1uF		25V
C595	1-164-156-11	CERAMIC CHIP	0.1uF		25V
C597	1-130-483-00	MYLAR	0.01uF	5%	50V
C598	1-130-483-00	MYLAR	0.01uF	5%	50V
		< CONNECTOR >			
* CN104	1-569-930-11	SOCKET, CONNECTOR 13P			
CN501	1-779-295-11	CONNECTOR, FFC (LIF(NON-ZIF)) 27P			
CN502	1-564-706-11	PIN, CONNECTOR (SMALL TYPE) 4P			
CN504	1-569-906-11	SOCKET, CONNECTOR 11P			
CN505	1-778-982-11	CONNECTOR, BOARD TO BOARD 13P			
CN506	1-778-982-11	CONNECTOR, BOARD TO BOARD 13P			
CN507	1-568-838-11	CONNECTOR, FFC 21P			
CN509	1-785-323-11	PIN, CONNECTOR (STRAIGHT) 11P			
CN513	1-564-506-11	PLUG, CONNECTOR 3P			
		< DIODE >			
D192	8-719-404-50	DIODE MA111-TX			
D193	8-719-404-50	DIODE MA111-TX			
D194	8-719-404-50	DIODE MA111-TX			
D402	8-719-404-50	DIODE MA111-TX			
D403	8-719-404-50	DIODE MA111-TX			
D404	8-719-404-50	DIODE MA111-TX			
D405	8-719-404-50	DIODE MA111-TX			
D406	8-719-404-50	DIODE MA111-TX			
D407	8-719-404-50	DIODE MA111-TX			
D408	6-500-522-21	DIODE 10EDB40-TB3			
D501	8-719-028-23	DIODE D3SBA20-4101			
D503	6-500-522-21	DIODE 10EDB40-TB3			
D504	6-500-522-21	DIODE 10EDB40-TB3			
D506	6-500-522-21	DIODE 10EDB40-TB3			
D554	8-719-083-63	DIODE UDZSTE-1713B			
		< GROUND TERMINAL >			
EPT501	1-537-738-21	TERMINAL, GROUND			

Ref. No.	Part No.	Description	Remark
		< FERRITE BEAD >	
FB300	1-469-152-11	FERRITE, EMI (SMD) (2012)	
FB301	1-469-152-11	FERRITE, EMI (SMD) (2012)	
FB302	1-216-864-11	SHORT CHIP 0	
FB303	1-469-152-11	FERRITE, EMI (SMD) (2012)	
FB304	1-216-864-11	SHORT CHIP 0	
FB305	1-216-864-11	SHORT CHIP 0	
FB306	1-216-864-11	SHORT CHIP 0	
FB416	1-414-864-11	FERRITE, EMI (SMD) (1608)	
FB462	1-414-864-11	FERRITE, EMI (SMD) (1608)	
FB500	1-216-864-11	SHORT CHIP 0	
FB501	1-216-864-11	SHORT CHIP 0	
FB502	1-216-864-11	SHORT CHIP 0	
FB503	1-216-864-11	SHORT CHIP 0	
FB555	1-216-864-11	SHORT CHIP 0	
		< IC >	
IC101	6-705-667-01	IC M61537FP-RF0G	
IC401	6-804-699-01	IC M3062CMEN-A17FPU0	
IC402	6-705-809-01	IC BD4929G-TR	
IC501	6-703-651-11	IC M61530FP-D60G	
IC503	6-600-465-11	IC TOTX147 (CD DIGITAL OUT (OPTICAL))	
IC510	6-703-550-01	IC TA7809LS	
IC511	6-703-550-01	IC TA7809LS	
IC513	6-702-771-01	IC TA78033LS	
IC514	8-759-598-69	IC BA6956AN	
IC515	8-759-598-69	IC BA6956AN	
IC519	8-759-710-97	IC NJM4565M-D	
		< JACK >	
J701	1-774-411-11	JACK, PIN 6P (PHONO IN L/R, VIDEO/MD IN L/R,VIDEO/MD OUT L/R)	
J716	1-794-970-11	JACK, PIN 1P (VIDEO OUT)	
		< JUMPER RESISTOR >	
JR100	1-216-864-11	SHORT CHIP 0	
JR101	1-216-864-11	SHORT CHIP 0	
JR105	1-216-864-11	SHORT CHIP 0	
JR107	1-216-296-11	SHORT CHIP 0	
JR109	1-216-296-11	SHORT CHIP 0	
JR110	1-216-296-11	SHORT CHIP 0	
JR111	1-216-864-11	SHORT CHIP 0	
JR112	1-216-864-11	SHORT CHIP 0	
JR113	1-216-864-11	SHORT CHIP 0	
JR114	1-216-864-11	SHORT CHIP 0	
JR115	1-216-864-11	SHORT CHIP 0	
JR116	1-216-864-11	SHORT CHIP 0	
JR118	1-216-296-11	SHORT CHIP 0	
JR119	1-216-864-11	SHORT CHIP 0	
JR121	1-216-864-11	SHORT CHIP 0	
JR131	1-216-864-11	SHORT CHIP 0	
JR205	1-216-296-11	SHORT CHIP 0	
JR207	1-216-864-11	SHORT CHIP 0	
JR208	1-216-296-11	SHORT CHIP 0	
JR209	1-216-296-11	SHORT CHIP 0	
JR210	1-216-296-11	SHORT CHIP 0	
JR211	1-216-296-11	SHORT CHIP 0	
JR212	1-216-864-11	SHORT CHIP 0	
JR213	1-216-296-11	SHORT CHIP 0	
JR215	1-216-296-11	SHORT CHIP 0	
JR216	1-216-296-11	SHORT CHIP 0	
JR218	1-216-864-11	SHORT CHIP 0	
JR300	1-216-296-11	SHORT CHIP 0	
JR400	1-216-296-11	SHORT CHIP 0	
JR401	1-216-296-11	SHORT CHIP 0	
JR402	1-216-864-11	SHORT CHIP 0	
JR403	1-216-864-11	SHORT CHIP 0	
JR404	1-216-864-11	SHORT CHIP 0	
JR405	1-216-296-11	SHORT CHIP 0	
JR406	1-216-296-11	SHORT CHIP 0	
JR407	1-216-296-11	SHORT CHIP 0	
JR408	1-216-296-11	SHORT CHIP 0	
JR409	1-216-296-11	SHORT CHIP 0	
JR440	1-216-864-11	SHORT CHIP 0	
JR441	1-216-864-11	SHORT CHIP 0	
JR475	1-216-296-11	SHORT CHIP 0	
JR500	1-216-296-11	SHORT CHIP 0	
JR501	1-216-864-11	SHORT CHIP 0	
JR502	1-216-296-11	SHORT CHIP 0	
JR503	1-216-296-11	SHORT CHIP 0	
JR504	1-216-296-11	SHORT CHIP 0	
JR505	1-216-296-11	SHORT CHIP 0	
JR506	1-216-864-11	SHORT CHIP 0	
JR509	1-216-864-11	SHORT CHIP 0	
JR510	1-216-296-11	SHORT CHIP 0	
JR515	1-216-864-11	SHORT CHIP 0	
JR517	1-216-864-11	SHORT CHIP 0	
JR518	1-216-864-11	SHORT CHIP 0	
JR519	1-216-864-11	SHORT CHIP 0	
JR553	1-216-864-11	SHORT CHIP 0	
		< COIL >	
L102	1-412-064-11	INDUCTOR 100uH	
L103	1-410-780-11	INDUCTOR 27mH	
L104	1-410-780-11	INDUCTOR 27mH	
L300	1-412-058-11	INDUCTOR 10uH	
		< TRANSISTOR >	
Q101	8-729-141-75	TRANSISTOR 2SD596DV345	
Q102	8-729-802-80	TRANSISTOR 2SC3661	
Q103	8-729-802-80	TRANSISTOR 2SC3661	
Q104	6-550-185-01	TRANSISTOR RT1P137P-TP-1	
Q105	8-729-027-43	TRANSISTOR DTC114EKA-T146	
Q106	8-729-027-43	TRANSISTOR DTC114EKA-T146	
Q107	8-729-027-31	TRANSISTOR DTA124EKA-T146	
Q108	8-729-027-43	TRANSISTOR DTC114EKA-T146	
Q109	8-729-027-43	TRANSISTOR DTC114EKA-T146	
Q110	8-729-216-22	TRANSISTOR 2SA812-T1-M5M6	
Q111	8-729-802-80	TRANSISTOR 2SC3661	
Q112	8-729-802-80	TRANSISTOR 2SC3661	
Q113	8-729-802-80	TRANSISTOR 2SC3661	
Q114	8-729-802-80	TRANSISTOR 2SC3661	
Q115	6-550-889-01	TRANSISTOR 2SC5938-T112-1B	
Q116	6-550-889-01	TRANSISTOR 2SC5938-T112-1B	
Q140	8-729-120-28	TRANSISTOR 2SC1623-L5L6	

Ref. No.	Part No.	Description	Remark
Q145	8-729-120-28	TRANSISTOR 2SC1623-L5L6	
Q165	6-550-889-01	TRANSISTOR 2SC5938-T112-1B	
Q180	6-550-889-01	TRANSISTOR 2SC5938-T112-1B	
Q190	8-729-027-43	TRANSISTOR DTC114EKA-T146	
Q191	8-729-903-46	TRANSISTOR 2SB1132-P	
Q192	8-729-027-43	TRANSISTOR DTC114EKA-T146	
Q193	8-729-903-46	TRANSISTOR 2SB1132-P	
Q194	8-729-027-43	TRANSISTOR DTC114EKA-T146	
Q195	8-729-027-43	TRANSISTOR DTC114EKA-T146	
Q196	8-729-903-46	TRANSISTOR 2SB1132-P	
Q198	8-729-027-43	TRANSISTOR DTC114EKA-T146	
Q199	6-550-889-01	TRANSISTOR 2SC5938-T112-1B	
Q200	8-729-120-28	TRANSISTOR 2SC1623-L5L6	
Q201	8-729-120-28	TRANSISTOR 2SC1623-L5L6	
Q203	6-550-889-01	TRANSISTOR 2SC5938-T112-1B	
Q204	6-550-889-01	TRANSISTOR 2SC5938-T112-1B	
Q401	8-729-120-28	TRANSISTOR 2SC1623-L5L6	
Q523	6-550-889-01	TRANSISTOR 2SC5938-T112-1B	
Q524	6-550-889-01	TRANSISTOR 2SC5938-T112-1B	
Q528	8-729-027-43	TRANSISTOR DTC114EKA-T146	
Q529	8-729-027-31	TRANSISTOR DTA124EKA-T146	
Q530	8-729-027-43	TRANSISTOR DTC114EKA-T146	
Q533	8-729-027-31	TRANSISTOR DTA124EKA-T146	
Q534	8-729-027-43	TRANSISTOR DTC114EKA-T146	
Q535	8-729-027-31	TRANSISTOR DTA124EKA-T146	
Q536	8-729-027-43	TRANSISTOR DTC114EKA-T146	
Q537	8-729-027-31	TRANSISTOR DTA124EKA-T146	
Q538	8-729-027-43	TRANSISTOR DTC114EKA-T146	
Q539	8-729-027-43	TRANSISTOR DTC114EKA-T146	
Q540	8-729-027-31	TRANSISTOR DTA124EKA-T146	
Q550	6-550-889-01	TRANSISTOR 2SC5938-T112-1B	
Q551	6-550-889-01	TRANSISTOR 2SC5938-T112-1B	
Q552	6-550-185-01	TRANSISTOR RT1P137P-TP-1	
Q553	8-729-026-68	TRANSISTOR 2SD2525(TP)	
Q554	8-729-027-43	TRANSISTOR DTC114EKA-T146	
Q555	8-729-120-28	TRANSISTOR 2SC1623-L5L6	
Q557	8-729-120-28	TRANSISTOR 2SC1623-L5L6	
Q563	8-729-120-28	TRANSISTOR 2SC1623-L5L6	
Q870	8-729-120-28	TRANSISTOR 2SC1623-L5L6	

< RESISTOR >

Ref. No.	Part No.	Description			Remark
R101	1-216-841-11	METAL CHIP	47K	5%	1/10W
R102	1-216-864-11	SHORT CHIP	0		
R103	1-216-864-11	SHORT CHIP	0		
R104	1-216-833-11	METAL CHIP	10K	5%	1/10W
R105	1-216-833-11	METAL CHIP	10K	5%	1/10W
R106	1-216-817-11	METAL CHIP	470	5%	1/10W
R107	1-216-821-11	METAL CHIP	1K	5%	1/10W
R108	1-216-838-11	METAL CHIP	27K	5%	1/10W
R109	1-216-825-11	METAL CHIP	2.2K	5%	1/10W
R110	1-216-835-11	METAL CHIP	15K	5%	1/10W
R111	1-216-835-11	METAL CHIP	15K	5%	1/10W
R112	1-216-829-11	METAL CHIP	4.7K	5%	1/10W
R113	1-216-809-11	METAL CHIP	100	5%	1/10W
R114	1-216-833-11	METAL CHIP	10K	5%	1/10W
R115	1-216-821-11	METAL CHIP	1K	5%	1/10W
R117	1-216-825-11	METAL CHIP	2.2K	5%	1/10W
R118	1-216-825-11	METAL CHIP	2.2K	5%	1/10W
R119	1-216-833-11	METAL CHIP	10K	5%	1/10W
R120	1-216-833-11	METAL CHIP	10K	5%	1/10W
R121	1-216-833-11	METAL CHIP	10K	5%	1/10W
R122	1-216-825-11	METAL CHIP	2.2K	5%	1/10W
R123	1-216-833-11	METAL CHIP	10K	5%	1/10W
R124	1-216-825-11	METAL CHIP	2.2K	5%	1/10W
R125	1-216-841-11	METAL CHIP	47K	5%	1/10W
R126	1-216-817-11	METAL CHIP	470	5%	1/10W
R127	1-216-825-11	METAL CHIP	2.2K	5%	1/10W
R128	1-216-825-11	METAL CHIP	2.2K	5%	1/10W
R129	1-216-825-11	METAL CHIP	2.2K	5%	1/10W
R132	1-218-867-11	METAL CHIP	6.8K	0.5%	1/10W
R133	1-216-857-11	METAL CHIP	1M	5%	1/10W
R134	1-216-817-11	METAL CHIP	470	5%	1/10W
R135	1-216-817-11	METAL CHIP	470	5%	1/10W
R136	1-216-830-11	METAL CHIP	5.6K	5%	1/10W
R137	1-216-830-11	METAL CHIP	5.6K	5%	1/10W
R138	1-216-829-11	METAL CHIP	4.7K	5%	1/10W
R139	1-216-829-11	METAL CHIP	4.7K	5%	1/10W
R140	1-216-833-11	METAL CHIP	10K	5%	1/10W
R141	1-216-841-11	METAL CHIP	47K	5%	1/10W
R142	1-216-838-11	METAL CHIP	27K	5%	1/10W
R143	1-216-838-11	METAL CHIP	27K	5%	1/10W
R145	1-216-833-11	METAL CHIP	10K	5%	1/10W
R147	1-216-825-11	METAL CHIP	2.2K	5%	1/10W
R148	1-216-825-11	METAL CHIP	2.2K	5%	1/10W
R150	1-216-821-11	METAL CHIP	1K	5%	1/10W
R151	1-216-833-11	METAL CHIP	10K	5%	1/10W
R152	1-216-809-11	METAL CHIP	100	5%	1/10W
R154	1-216-833-11	METAL CHIP	10K	5%	1/10W
R155	1-216-833-11	METAL CHIP	10K	5%	1/10W
R156	1-216-805-11	METAL CHIP	47	5%	1/10W
R157	1-216-797-11	METAL CHIP	10	5%	1/10W
R158	1-216-803-11	METAL CHIP	33	5%	1/10W
R159	1-216-864-11	SHORT CHIP	0		
R160	1-216-841-11	METAL CHIP	47K	5%	1/10W
R161	1-218-867-11	METAL CHIP	6.8K	0.5%	1/10W
R162	1-216-857-11	METAL CHIP	1M	5%	1/10W
R164	1-216-829-11	METAL CHIP	4.7K	5%	1/10W
R165	1-216-841-11	METAL CHIP	47K	5%	1/10W
R166	1-216-821-11	METAL CHIP	1K	5%	1/10W
R167	1-216-834-11	METAL CHIP	12K	5%	1/10W
R168	1-216-851-11	METAL CHIP	330K	5%	1/10W
R169	1-216-812-11	METAL CHIP	180	5%	1/10W
R170	1-216-864-11	SHORT CHIP	0		
R171	1-216-821-11	METAL CHIP	1K	5%	1/10W
R172	1-216-864-11	SHORT CHIP	0		
R173	1-216-825-11	METAL CHIP	2.2K	5%	1/10W
R174	1-216-825-11	METAL CHIP	2.2K	5%	1/10W
R175	1-216-819-11	METAL CHIP	680	5%	1/10W
R176	1-216-827-11	METAL CHIP	3.3K	5%	1/10W
R177	1-216-827-11	METAL CHIP	3.3K	5%	1/10W
R178	1-216-851-11	METAL CHIP	330K	5%	1/10W
R179	1-216-834-11	METAL CHIP	12K	5%	1/10W
R180	1-216-827-11	METAL CHIP	3.3K	5%	1/10W
R181	1-216-833-11	METAL CHIP	10K	5%	1/10W
R182	1-216-809-11	METAL CHIP	100	5%	1/10W
R183	1-216-809-11	METAL CHIP	100	5%	1/10W

MAIN

Ref. No.	Part No.	Description			Remark
R184	1-216-809-11	METAL CHIP	100	5%	1/10W
R185	1-216-809-11	METAL CHIP	100	5%	1/10W
R186	1-216-809-11	METAL CHIP	100	5%	1/10W
R187	1-216-809-11	METAL CHIP	100	5%	1/10W
R188	1-216-809-11	METAL CHIP	100	5%	1/10W
R189	1-216-819-11	METAL CHIP	680	5%	1/10W
R190	1-216-825-11	METAL CHIP	2.2K	5%	1/10W
R191	1-216-825-11	METAL CHIP	2.2K	5%	1/10W
R192	1-216-827-11	METAL CHIP	3.3K	5%	1/10W
R193	1-216-833-11	METAL CHIP	10K	5%	1/10W
R194	1-216-819-11	METAL CHIP	680	5%	1/10W
R195	1-216-833-11	METAL CHIP	10K	5%	1/10W
R196	1-216-833-11	METAL CHIP	10K	5%	1/10W
R197	1-216-837-11	METAL CHIP	22K	5%	1/10W
R198	1-216-833-11	METAL CHIP	10K	5%	1/10W
R199	1-216-845-11	METAL CHIP	100K	5%	1/10W
R200	1-216-841-11	METAL CHIP	47K	5%	1/10W
R201	1-216-841-11	METAL CHIP	47K	5%	1/10W
R206	1-216-833-11	METAL CHIP	10K	5%	1/10W
R207	1-216-833-11	METAL CHIP	10K	5%	1/10W
R214	1-220-373-11	METAL CHIP	620	5%	1/10W
R215	1-220-373-11	METAL CHIP	620	5%	1/10W
R225	1-216-821-11	METAL CHIP	1K	5%	1/10W
R226	1-216-841-11	METAL CHIP	47K	5%	1/10W
R227	1-216-833-11	METAL CHIP	10K	5%	1/10W
R228	1-216-833-11	METAL CHIP	10K	5%	1/10W
R229	1-216-821-11	METAL CHIP	1K	5%	1/10W
R231	1-216-841-11	METAL CHIP	47K	5%	1/10W
R232	1-216-833-11	METAL CHIP	10K	5%	1/10W
R234	1-216-833-11	METAL CHIP	10K	5%	1/10W
R239	1-216-829-11	METAL CHIP	4.7K	5%	1/10W
R240	1-216-841-11	METAL CHIP	47K	5%	1/10W
R241	1-216-829-11	METAL CHIP	4.7K	5%	1/10W
R245	1-216-841-11	METAL CHIP	47K	5%	1/10W
R247	1-216-841-11	METAL CHIP	47K	5%	1/10W
R248	1-216-825-11	METAL CHIP	2.2K	5%	1/10W
R249	1-216-841-11	METAL CHIP	47K	5%	1/10W
R250	1-216-825-11	METAL CHIP	2.2K	5%	1/10W
R252	1-216-817-11	METAL CHIP	470	5%	1/10W
R253	1-216-817-11	METAL CHIP	470	5%	1/10W
R257	1-216-833-11	METAL CHIP	10K	5%	1/10W
R258	1-216-833-11	METAL CHIP	10K	5%	1/10W
R282	1-216-833-11	METAL CHIP	10K	5%	1/10W
R283	1-216-833-11	METAL CHIP	10K	5%	1/10W
R284	1-216-833-11	METAL CHIP	10K	5%	1/10W
R285	1-216-833-11	METAL CHIP	10K	5%	1/10W
R286	1-216-841-11	METAL CHIP	47K	5%	1/10W
R287	1-216-841-11	METAL CHIP	47K	5%	1/10W
R299	1-216-845-11	METAL CHIP	100K	5%	1/10W
R300	1-216-845-11	METAL CHIP	100K	5%	1/10W
R301	1-216-841-11	METAL CHIP	47K	5%	1/10W
R302	1-216-821-11	METAL CHIP	1K	5%	1/10W
R303	1-216-845-11	METAL CHIP	100K	5%	1/10W
R304	1-218-285-11	METAL CHIP	75	5%	1/10W
R305	1-216-841-11	METAL CHIP	47K	5%	1/10W
R306	1-216-842-11	METAL CHIP	56K	5%	1/10W
R307	1-216-835-11	METAL CHIP	15K	5%	1/10W
R308	1-216-839-11	METAL CHIP	33K	5%	1/10W
R309	1-216-821-11	METAL CHIP	1K	5%	1/10W
R310	1-216-841-11	METAL CHIP	47K	5%	1/10W
R311	1-216-809-11	METAL CHIP	100	5%	1/10W
R312	1-216-809-11	METAL CHIP	100	5%	1/10W
R313	1-216-809-11	METAL CHIP	100	5%	1/10W
R314	1-216-797-11	METAL CHIP	10	5%	1/10W
R315	1-216-797-11	METAL CHIP	10	5%	1/10W
R316	1-216-809-11	METAL CHIP	100	5%	1/10W
R317	1-216-821-11	METAL CHIP	1K	5%	1/10W
R318	1-216-809-11	METAL CHIP	100	5%	1/10W
R319	1-216-821-11	METAL CHIP	1K	5%	1/10W
R320	1-216-821-11	METAL CHIP	1K	5%	1/10W
R321	1-216-839-11	METAL CHIP	33K	5%	1/10W
R322	1-216-839-11	METAL CHIP	33K	5%	1/10W
R323	1-216-833-11	METAL CHIP	10K	5%	1/10W
R324	1-216-833-11	METAL CHIP	10K	5%	1/10W
R325	1-216-833-11	METAL CHIP	10K	5%	1/10W
R326	1-216-833-11	METAL CHIP	10K	5%	1/10W
R328	1-216-864-11	SHORT CHIP	0		
R331	1-216-821-11	METAL CHIP	1K	5%	1/10W
R332	1-216-822-11	METAL CHIP	1.2K	5%	1/10W
R341	1-216-812-11	METAL CHIP	180	5%	1/10W
R391	1-216-811-11	METAL CHIP	150	5%	1/10W
R393	1-216-829-11	METAL CHIP	4.7K	5%	1/10W
R395	1-216-809-11	METAL CHIP	100	5%	1/10W
R400	1-216-809-11	METAL CHIP	100	5%	1/10W
R401	1-216-837-11	METAL CHIP	22K	5%	1/10W
R402	1-216-809-11	METAL CHIP	100	5%	1/10W
R403	1-216-809-11	METAL CHIP	100	5%	1/10W
R404	1-216-809-11	METAL CHIP	100	5%	1/10W
R405	1-216-864-11	SHORT CHIP	0		
R406	1-216-864-11	SHORT CHIP	0		
R407	1-216-864-11	SHORT CHIP	0		
R409	1-216-833-11	METAL CHIP	10K	5%	1/10W
R411	1-216-851-11	METAL CHIP	330K	5%	1/10W
R412	1-216-833-11	METAL CHIP	10K	5%	1/10W
R413	1-216-864-11	SHORT CHIP	0		
R417	1-216-833-11	METAL CHIP	10K	5%	1/10W
R418	1-216-864-11	SHORT CHIP	0		
R419	1-216-809-11	METAL CHIP	100	5%	1/10W
R420	1-216-821-11	METAL CHIP	1K	5%	1/10W
R421	1-216-809-11	METAL CHIP	100	5%	1/10W
R422	1-216-809-11	METAL CHIP	100	5%	1/10W
R423	1-216-809-11	METAL CHIP	100	5%	1/10W
R424	1-216-809-11	METAL CHIP	100	5%	1/10W
R425	1-216-809-11	METAL CHIP	100	5%	1/10W
R426	1-216-837-11	METAL CHIP	22K	5%	1/10W
R427	1-216-821-11	METAL CHIP	1K	5%	1/10W
R428	1-216-813-11	METAL CHIP	220	5%	1/10W
R429	1-216-809-11	METAL CHIP	100	5%	1/10W
R430	1-216-809-11	METAL CHIP	100	5%	1/10W
R431	1-216-833-11	METAL CHIP	10K	5%	1/10W
R432	1-216-809-11	METAL CHIP	100	5%	1/10W
R434	1-216-833-11	METAL CHIP	10K	5%	1/10W
R436	1-216-833-11	METAL CHIP	10K	5%	1/10W
R437	1-216-833-11	METAL CHIP	10K	5%	1/10W
R439	1-216-833-11	METAL CHIP	10K	5%	1/10W
R444	1-216-833-11	METAL CHIP	10K	5%	1/10W

Ref. No.	Part No.	Description			Remark
R445	1-216-833-11	METAL CHIP	10K	5%	1/10W
R446	1-216-833-11	METAL CHIP	10K	5%	1/10W
R447	1-216-833-11	METAL CHIP	10K	5%	1/10W
R448	1-216-833-11	METAL CHIP	10K	5%	1/10W
R449	1-216-833-11	METAL CHIP	10K	5%	1/10W
R450	1-216-833-11	METAL CHIP	10K	5%	1/10W
R451	1-216-833-11	METAL CHIP	10K	5%	1/10W
R452	1-216-833-11	METAL CHIP	10K	5%	1/10W
R453	1-216-833-11	METAL CHIP	10K	5%	1/10W
R454	1-216-833-11	METAL CHIP	10K	5%	1/10W
R465	1-216-809-11	METAL CHIP	100	5%	1/10W
R466	1-216-809-11	METAL CHIP	100	5%	1/10W
R467	1-216-809-11	METAL CHIP	100	5%	1/10W
R468	1-216-809-11	METAL CHIP	100	5%	1/10W
R473	1-216-833-11	METAL CHIP	10K	5%	1/10W
R474	1-216-833-11	METAL CHIP	10K	5%	1/10W
R475	1-216-833-11	METAL CHIP	10K	5%	1/10W
R476	1-216-833-11	METAL CHIP	10K	5%	1/10W
R477	1-216-809-11	METAL CHIP	100	5%	1/10W
R481	1-216-809-11	METAL CHIP	100	5%	1/10W
R482	1-216-833-11	METAL CHIP	10K	5%	1/10W
R486	1-216-833-11	METAL CHIP	10K	5%	1/10W
R487	1-216-833-11	METAL CHIP	10K	5%	1/10W
R492	1-216-829-11	METAL CHIP	4.7K	5%	1/10W
R493	1-216-821-11	METAL CHIP	1K	5%	1/10W (MX)
R493	1-216-825-11	METAL CHIP	2.2K	5%	1/10W (US)
R494	1-216-833-11	METAL CHIP	10K	5%	1/10W
R500	1-216-815-11	METAL CHIP	330	5%	1/10W
R501	1-216-821-11	METAL CHIP	1K	5%	1/10W
R502	1-216-821-11	METAL CHIP	1K	5%	1/10W
R503	1-216-821-11	METAL CHIP	1K	5%	1/10W
R504	1-216-845-11	METAL CHIP	100K	5%	1/10W
R505	1-216-845-11	METAL CHIP	100K	5%	1/10W
R506	1-216-821-11	METAL CHIP	1K	5%	1/10W
R507	1-216-821-11	METAL CHIP	1K	5%	1/10W
R508	1-216-841-11	METAL CHIP	47K	5%	1/10W
R509	1-216-841-11	METAL CHIP	47K	5%	1/10W
R510	1-216-854-11	METAL CHIP	560K	5%	1/10W
R511	1-216-854-11	METAL CHIP	560K	5%	1/10W
R512	1-216-821-11	METAL CHIP	1K	5%	1/10W
R513	1-216-821-11	METAL CHIP	1K	5%	1/10W
R514	1-216-841-11	METAL CHIP	47K	5%	1/10W
R515	1-216-841-11	METAL CHIP	47K	5%	1/10W
R516	1-216-825-11	METAL CHIP	2.2K	5%	1/10W
R517	1-216-825-11	METAL CHIP	2.2K	5%	1/10W
R518	1-216-809-11	METAL CHIP	100	5%	1/10W
R519	1-216-821-11	METAL CHIP	1K	5%	1/10W
R520	1-216-821-11	METAL CHIP	1K	5%	1/10W
R521	1-216-845-11	METAL CHIP	100K	5%	1/10W
R522	1-216-845-11	METAL CHIP	100K	5%	1/10W
R523	1-216-821-11	METAL CHIP	1K	5%	1/10W
R524	1-216-845-11	METAL CHIP	100K	5%	1/10W
R525	1-216-845-11	METAL CHIP	100K	5%	1/10W
R526	1-216-821-11	METAL CHIP	1K	5%	1/10W
R527	1-216-821-11	METAL CHIP	1K	5%	1/10W
R528	1-216-821-11	METAL CHIP	1K	5%	1/10W
R529	1-216-821-11	METAL CHIP	1K	5%	1/10W
R530	1-216-821-11	METAL CHIP	1K	5%	1/10W
R531	1-216-822-11	METAL CHIP	1.2K	5%	1/10W
R554	1-216-833-11	METAL CHIP	10K	5%	1/10W
R555	1-216-833-11	METAL CHIP	10K	5%	1/10W
R556	1-216-841-11	METAL CHIP	47K	5%	1/10W
R557	1-216-841-11	METAL CHIP	47K	5%	1/10W
R558	1-216-821-11	METAL CHIP	1K	5%	1/10W
R559	1-216-833-11	METAL CHIP	10K	5%	1/10W
R560	1-216-821-11	METAL CHIP	1K	5%	1/10W
R561	1-216-833-11	METAL CHIP	10K	5%	1/10W
R566	1-216-843-11	METAL CHIP	68K	5%	1/10W
R567	1-216-843-11	METAL CHIP	68K	5%	1/10W
R568	1-216-843-11	METAL CHIP	68K	5%	1/10W
R569	1-216-835-11	METAL CHIP	15K	5%	1/10W
R571	1-216-835-11	METAL CHIP	15K	5%	1/10W
R572	1-216-835-11	METAL CHIP	15K	5%	1/10W
R573	1-216-853-11	METAL CHIP	470K	5%	1/10W
R575	1-216-853-11	METAL CHIP	470K	5%	1/10W
R576	1-216-853-11	METAL CHIP	470K	5%	1/10W
R578	1-216-845-11	METAL CHIP	100K	5%	1/10W
R579	1-216-833-11	METAL CHIP	10K	5%	1/10W
R584	1-216-837-11	METAL CHIP	22K	5%	1/10W
R585	1-216-829-11	METAL CHIP	4.7K	5%	1/10W
R586	1-216-829-11	METAL CHIP	4.7K	5%	1/10W
R587	1-216-845-11	METAL CHIP	100K	5%	1/10W
R588	1-216-829-11	METAL CHIP	4.7K	5%	1/10W
		< TRANSFORMER >			
T101	1-433-372-11	TRANSFORMER, BIAS OSCILLATION			
		< VIBRATOR >			
X401	1-760-252-12	VIBRATOR, CRYSTAL (32.768kHz)			
X402	1-795-482-11	VIBRATOR, CERAMIC (16MHz)			

****

MD-94 BOARD
****

		< CONNECTOR >			
CN001	1-506-490-21	PIN, CONNECTOR 11P			
CN002	1-784-767-11	CONNECTOR, FFC 6P			
* CN003	1-564-013-11	PIN, CONNECTOR 3P			
CN004	1-506-481-11	PIN, CONNECTOR 2P			
		< SWITCH >			
S001	1-786-514-21	SWITCH, LEVER (SLIDE) (TRAY POSITION DETECT)			

****

MIC BOARD
****

		< CAPACITOR >			
C801	1-126-934-11	ELECT	220uF	20%	16V
C802	1-126-961-11	ELECT	2.2uF	20%	50V
C804	1-164-217-11	CERAMIC CHIP	150PF	5%	50V
C805	1-126-964-11	ELECT	10uF	20%	50V
C806	1-162-923-11	CERAMIC CHIP	47PF	5%	50V
C807	1-126-961-11	ELECT	2.2uF	20%	50V
C808	1-107-826-11	CERAMIC CHIP	0.1uF	10%	16V
C809	1-126-961-11	ELECT	2.2uF	20%	50V

Ref. No.	Part No.	Description			Remark
C810	1-164-315-11	CERAMIC CHIP	470PF	5%	50V
C811	1-162-923-11	CERAMIC CHIP	47PF	5%	50V
C812	1-126-960-11	ELECT	1uF	20%	50V
C813	1-115-416-11	CERAMIC CHIP	0.001uF	5%	25V
C814	1-126-961-11	ELECT	2.2uF	20%	50V
C815	1-162-970-11	CERAMIC CHIP	0.01uF	10%	25V
C817	1-162-970-11	CERAMIC CHIP	0.01uF	10%	25V
C818	1-107-826-11	CERAMIC CHIP	0.1uF	10%	16V
		< CONNECTOR >			
CN920	1-564-705-11	PIN, CONNECTOR (SMALL TYPE) 3P			
		< GROUND TERMINAL >			
EPT801	1-537-738-21	TERMINAL, GROUND			
		< IC >			
IC850	8-759-710-97	IC NJM4565M-D			
		< JACK >			
J801	1-770-226-11	JACK (LARGE TYPE) (MIC 1)			
J802	1-770-226-11	JACK (LARGE TYPE) (MIC 2)			
		< RESISTOR >			
R800	1-216-864-11	SHORT CHIP	0		
R801	1-216-845-11	METAL CHIP	100K	5%	1/10W
R802	1-216-833-11	METAL CHIP	10K	5%	1/10W
R803	1-216-833-11	METAL CHIP	10K	5%	1/10W
R804	1-216-809-11	METAL CHIP	100	5%	1/10W
R805	1-216-847-11	METAL CHIP	150K	5%	1/10W
R806	1-216-833-11	METAL CHIP	10K	5%	1/10W
R807	1-216-809-11	METAL CHIP	100	5%	1/10W
R808	1-216-841-11	METAL CHIP	47K	5%	1/10W
R809	1-216-821-11	METAL CHIP	1K	5%	1/10W
R810	1-216-845-11	METAL CHIP	100K	5%	1/10W
R811	1-216-833-11	METAL CHIP	10K	5%	1/10W
R812	1-216-821-11	METAL CHIP	1K	5%	1/10W
R813	1-216-821-11	METAL CHIP	1K	5%	1/10W
R814	1-216-833-11	METAL CHIP	10K	5%	1/10W
		< VARIABLE RESISTOR >			
RV801	1-227-452-11	RES, VAR, CARBON 50K (MIC LEVEL)			

****

	A-4751-072-A	PANEL BOARD, COMPLETE (US)			
	A-4753-562-A	PANEL BOARD, COMPLETE (MX)			
		**********			
	4-253-178-01	HOLDER, FL			
		< CAPACITOR >			
C900	1-126-163-11	ELECT	4.7uF	20%	50V
C903	1-107-826-11	CERAMIC CHIP	0.1uF	10%	16V
C904	1-107-826-11	CERAMIC CHIP	0.1uF	10%	16V
C905	1-107-826-11	CERAMIC CHIP	0.1uF	10%	16V
C910	1-162-970-11	CERAMIC CHIP	0.01uF	10%	25V
C916	1-107-826-11	CERAMIC CHIP	0.1uF	10%	16V
C917	1-162-970-11	CERAMIC CHIP	0.01uF	10%	25V
C918	1-126-518-11	ELECT	470uF	20%	4V
C919	1-162-970-11	CERAMIC CHIP	0.01uF	10%	25V
C920	1-126-947-11	ELECT	47uF	20%	35V
C921	1-115-416-11	CERAMIC CHIP	0.001uF	5%	25V
C922	1-126-964-11	ELECT	10uF	20%	50V
C923	1-162-970-11	CERAMIC CHIP	0.01uF	10%	25V
C924	1-162-927-11	CERAMIC CHIP	100PF	5%	50V
C925	1-162-927-11	CERAMIC CHIP	100PF	5%	50V
C926	1-162-927-11	CERAMIC CHIP	100PF	5%	50V
C927	1-162-927-11	CERAMIC CHIP	100PF	5%	50V
C928	1-162-927-11	CERAMIC CHIP	100PF	5%	50V
C929	1-162-927-11	CERAMIC CHIP	100PF	5%	50V
C930	1-162-927-11	CERAMIC CHIP	100PF	5%	50V
C931	1-162-927-11	CERAMIC CHIP	100PF	5%	50V
C932	1-162-927-11	CERAMIC CHIP	100PF	5%	50V
C933	1-162-927-11	CERAMIC CHIP	100PF	5%	50V
C934	1-162-927-11	CERAMIC CHIP	100PF	5%	50V
C935	1-162-927-11	CERAMIC CHIP	100PF	5%	50V
C936	1-162-927-11	CERAMIC CHIP	100PF	5%	50V
C937	1-162-927-11	CERAMIC CHIP	100PF	5%	50V
C938	1-162-927-11	CERAMIC CHIP	100PF	5%	50V
C939	1-162-927-11	CERAMIC CHIP	100PF	5%	50V
C940	1-162-927-11	CERAMIC CHIP	100PF	5%	50V
C941	1-162-927-11	CERAMIC CHIP	100PF	5%	50V
C942	1-162-927-11	CERAMIC CHIP	100PF	5%	50V
C944	1-126-964-11	ELECT	10uF	20%	50V
C945	1-125-837-11	CERAMIC CHIP	1uF	10%	6.3V
C946	1-164-315-11	CERAMIC CHIP	470PF	5%	50V
C947	1-125-837-11	CERAMIC CHIP	1uF	10%	6.3V
C948	1-164-315-11	CERAMIC CHIP	470PF	5%	50V
C949	1-125-837-11	CERAMIC CHIP	1uF	10%	6.3V
C950	1-162-968-11	CERAMIC CHIP	0.0047uF	10%	50V
C951	1-125-837-11	CERAMIC CHIP	1uF	10%	6.3V
C952	1-162-968-11	CERAMIC CHIP	0.0047uF	10%	50V
C953	1-125-837-11	CERAMIC CHIP	1uF	10%	6.3V
C954	1-164-227-11	CERAMIC CHIP	0.022uF	10%	25V
C955	1-125-837-11	CERAMIC CHIP	1uF	10%	6.3V
C956	1-164-227-11	CERAMIC CHIP	0.022uF	10%	25V
C957	1-125-837-11	CERAMIC CHIP	1uF	10%	6.3V
C958	1-165-176-11	CERAMIC CHIP	0.047uF	10%	16V
C959	1-165-176-11	CERAMIC CHIP	0.047uF	10%	16V
C960	1-126-960-11	ELECT	1uF	20%	50V
C961	1-126-963-11	ELECT	4.7uF	20%	50V
C973	1-126-916-11	ELECT	1000uF	20%	6.3V
		< CONNECTOR >			
CN906	1-569-914-11	SOCKET, CONNECTOR 21P			
CN908	1-564-721-11	PIN, CONNECTOR (SMALL TYPE) 5P			
CN913	1-785-341-11	PIN, CONNECTOR (LIGHT ANGLE) 15P			
		< DIODE >			
D900	8-719-404-50	DIODE MA111-TX			
D901	8-719-404-50	DIODE MA111-TX			
D902	8-719-404-50	DIODE MA111-TX			
D903	8-719-404-50	DIODE MA111-TX			
D904	6-500-508-01	DIODE RR263M-400FTR			
D905	8-719-976-99	DIODE DTZ5.1B			
D906	8-719-060-27	LED SLR-325MCT31 (TUNER/BAND)			
D927	6-500-508-01	DIODE RR263M-400FTR			

Ref. No.	Part No.	Description			Remark
		< JUMPER RESISTOR >			
FB901	1-216-864-11	SHORT CHIP	0		
		< VACUUM FLUORESCENT DISPLAY >			
FL901	1-518-978-11	VACUUM FLUORESCENT DISPLAY			
		< IC >			
IC901	6-803-974-01	IC MB90M407PF-G-142-BNDE1			
IC902	6-600-174-01	IC RPM7240-H4 (IR)			
IC903	6-705-678-01	IC NJM2760V-TE2			
		< JUMPER RESISTOR >			
JR916	1-216-864-11	SHORT CHIP	0		
JR917	1-216-864-11	SHORT CHIP	0		
JR921	1-216-864-11	SHORT CHIP	0		
		< TRANSISTOR >			
Q901	8-729-027-56	TRANSISTOR	DTC143TKA-T146		
Q902	8-729-027-56	TRANSISTOR	DTC143TKA-T146		
Q903	8-729-027-43	TRANSISTOR	DTC114EKA-T146		
Q904	8-729-903-46	TRANSISTOR	2SB1132-P		
Q905	8-729-027-43	TRANSISTOR	DTC114EKA-T146		
Q906	8-729-903-46	TRANSISTOR	2SB1132-P		
Q908	8-729-027-43	TRANSISTOR	DTC114EKA-T146		
		< RESISTOR >			
R898	1-216-819-11	METAL CHIP	680	5%	1/10W
R899	1-216-819-11	METAL CHIP	680	5%	1/10W
R900	1-216-833-11	METAL CHIP	10K	5%	1/10W
R901	1-216-833-11	METAL CHIP	10K	5%	1/10W
R902	1-216-833-11	METAL CHIP	10K	5%	1/10W
R903	1-216-809-11	METAL CHIP	100	5%	1/10W
R904	1-216-809-11	METAL CHIP	100	5%	1/10W
R905	1-216-835-11	METAL CHIP	15K	5%	1/10W
R906	1-216-835-11	METAL CHIP	15K	5%	1/10W
R907	1-216-835-11	METAL CHIP	15K	5%	1/10W
R908	1-216-835-11	METAL CHIP	15K	5%	1/10W
R909	1-216-835-11	METAL CHIP	15K	5%	1/10W
R910	1-216-835-11	METAL CHIP	15K	5%	1/10W
R911	1-216-864-11	SHORT CHIP	0		
R912	1-216-833-11	METAL CHIP	10K	5%	1/10W
R913	1-216-864-11	SHORT CHIP	0		
R914	1-216-833-11	METAL CHIP	10K	5%	1/10W
R915	1-216-809-11	METAL CHIP	100	5%	1/10W
R916	1-216-821-11	METAL CHIP	1K	5%	1/10W
R917	1-216-833-11	METAL CHIP	10K	5%	1/10W
R918	1-216-821-11	METAL CHIP	1K	5%	1/10W
R919	1-216-833-11	METAL CHIP	10K	5%	1/10W
R922	1-216-857-11	METAL CHIP	1M	5%	1/10W
R938	1-216-845-11	METAL CHIP	100K	5%	1/10W
R939	1-216-845-11	METAL CHIP	100K	5%	1/10W
R940	1-216-837-11	METAL CHIP	22K	5%	1/10W
R941	1-216-809-11	METAL CHIP	100	5%	1/10W
R942	1-216-809-11	METAL CHIP	100	5%	1/10W
R944	1-216-805-11	METAL CHIP	47	5%	1/10W
R945	1-216-842-11	METAL CHIP	56K	5%	1/10W
R946	1-216-845-11	METAL CHIP	100K	5%	1/10W

Ref. No.	Part No.	Description			Remark
R947	1-216-821-11	METAL CHIP	1K	5%	1/10W
R948	1-218-867-11	METAL CHIP	6.8K	0.5%	1/10W
R949	1-216-821-11	METAL CHIP	1K	5%	1/10W
R950	1-216-821-11	METAL CHIP	1K	5%	1/10W
R951	1-216-830-11	METAL CHIP	5.6K	5%	1/10W
R952	1-216-821-11	METAL CHIP	1K	5%	1/10W
R953	1-216-821-11	METAL CHIP	1K	5%	1/10W
R954	1-216-833-11	METAL CHIP	10K	5%	1/10W
R956	1-216-823-11	METAL CHIP	1.5K	5%	1/10W
R957	1-216-821-11	METAL CHIP	1K	5%	1/10W
R958	1-216-819-11	METAL CHIP	680	5%	1/10W
R959	1-216-817-11	METAL CHIP	470	5%	1/10W
R983	1-216-817-11	METAL CHIP	470	5%	1/10W
R984	1-216-819-11	METAL CHIP	680	5%	1/10W
R985	1-216-821-11	METAL CHIP	1K	5%	1/10W
R986	1-216-823-11	METAL CHIP	1.5K	5%	1/10W
R987	1-216-823-11	METAL CHIP	1.5K	5%	1/10W
R988	1-216-825-11	METAL CHIP	2.2K	5%	1/10W
R989	1-216-827-11	METAL CHIP	3.3K	5%	1/10W
R990	1-216-817-11	METAL CHIP	470	5%	1/10W
R993	1-216-817-11	METAL CHIP	470	5%	1/10W
R994	1-216-821-11	METAL CHIP	1K	5%	1/10W
R997	1-216-817-11	METAL CHIP	470	5%	1/10W
R998	1-216-821-11	METAL CHIP	1K	5%	1/10W
R999	1-216-864-11	SHORT CHIP	0		
R1350	1-216-837-11	METAL CHIP	22K	5%	1/10W
R1351	1-216-821-11	METAL CHIP	1K	5%	1/10W
R1352	1-216-829-11	METAL CHIP	4.7K	5%	1/10W
		< SWITCH >			
S900	1-771-410-21	SWITCH, TACTILE (ILLUMINATION)			
S901	1-771-410-21	SWITCH, TACTILE (CLOCK TIMER SET)			
S902	1-771-410-21	SWITCH, TACTILE (CLOCK TIMER SELECT)			
S903	1-771-410-21	SWITCH, TACTILE (SLEEP)			
S921	1-771-410-21	SWITCH, TACTILE (TUNER/BAND)			
S922	1-771-410-21	SWITCH, TACTILE (TUNING –)			
S923	1-771-410-21	SWITCH, TACTILE (TUNING +)			
S924	1-771-410-21	SWITCH, TACTILE (TUNER ENTER)			
S925	1-771-410-21	SWITCH, TACTILE (MEMORY)			
S926	1-771-410-21	SWITCH, TACTILE (FM MODE)			
S927	1-771-410-21	SWITCH, TACTILE (TUNING MODE)			
S928	1-771-410-21	SWITCH, TACTILE (DISPLAY)			
		< VIBRATOR >			
X601	1-781-282-51	VIBRATOR, CERAMIC (4MHz)			

****

	A-4751-050-A	POWER BOARD, COMPLETE (US)			
	A-4753-555-A	POWER BOARD, COMPLETE (MX)			
		**********			
	7-685-647-79	SCREW +BVTP 3X10 TYPE2 IT-3			
		< CAPACITOR >			
C600	1-126-963-11	ELECT	4.7uF	20%	50V
C601	1-162-966-11	CERAMIC CHIP	0.0022uF	10%	50V
C602	1-104-658-11	ELECT	100uF	20%	10V
C604	1-162-927-11	CERAMIC CHIP	100PF	5%	50V
C605	1-162-970-11	CERAMIC CHIP	0.01uF	10%	25V

POWER

Ref. No.	Part No.	Description			Remark
C608	1-126-965-11	ELECT	22uF	20%	50V
C609	1-128-560-11	ELECT	22uF	20%	100V
C610	1-128-560-11	ELECT	22uF	20%	100V
C616	1-136-495-11	FILM	0.068uF	5%	50V
C617	1-136-495-11	FILM	0.068uF	5%	50V
C627	1-126-961-11	ELECT	2.2uF	20%	50V
C628	1-126-933-11	ELECT	100uF	20%	16V
C629	1-164-156-11	CERAMIC CHIP	0.1uF		25V
C634	1-104-665-11	ELECT	100uF	20%	25V
C635	1-104-665-11	ELECT	100uF	20%	25V
C636	1-107-721-11	ELECT	4.7uF	20%	100V
C637	1-107-721-11	ELECT	4.7uF	20%	100V
C648	1-104-658-11	ELECT	100uF	20%	10V
C649	1-126-964-11	ELECT	10uF	20%	50V
C650	1-126-963-11	ELECT	4.7uF	20%	50V
C651	1-162-966-11	CERAMIC CHIP	0.0022uF	10%	50V
C652	1-104-658-11	ELECT	100uF	20%	10V
C654	1-162-927-11	CERAMIC CHIP	100PF	5%	50V
C655	1-126-964-11	ELECT	10uF	20%	50V
C656	1-127-815-11	ELECT	3300uF	20%	100V
C657	1-137-749-11	MYLAR	0.1uF		100V
C658	1-127-812-11	ELECT	3300uF	20%	63V
C659	1-136-497-81	FILM	0.1uF	5%	50V
C662	1-126-964-11	ELECT	10uF	20%	50V
C663	1-126-968-11	ELECT	100uF	20%	50V
C666	1-136-495-11	FILM	0.068uF	5%	50V
C667	1-136-495-11	FILM	0.068uF	5%	50V
C676	1-127-815-11	ELECT	3300uF	20%	100V
C677	1-137-749-11	MYLAR	0.1uF		100V
C678	1-127-812-11	ELECT	3300uF	20%	63V
C679	1-136-497-81	FILM	0.1uF	5%	50V
C690	1-164-156-11	CERAMIC CHIP	0.1uF		25V
C691	1-162-974-11	CERAMIC CHIP	0.01uF		50V
C692	1-162-974-11	CERAMIC CHIP	0.01uF		50V
C694	1-162-974-11	CERAMIC CHIP	0.01uF		50V
C695	1-162-974-11	CERAMIC CHIP	0.01uF		50V
		< CONNECTOR >			
CN600	1-564-707-11	PIN, CONNECTOR (SMALL TYPE) 5P			
CN601	1-778-981-21	CONNECTOR, BOARD TO BOARD 13P			
CN602	1-778-981-21	CONNECTOR, BOARD TO BOARD 13P			
* CN606	1-564-511-11	PLUG, CONNECTOR 8P			
		< DIODE >			
D609	8-719-404-50	DIODE MA111-TX			
D611	8-719-056-93	DIODE UDZ-TE-17-18B			
D612	8-719-056-93	DIODE UDZ-TE-17-18B			
D620	8-719-404-50	DIODE MA111-TX			
D624	8-719-404-50	DIODE MA111-TX			
D627	8-719-404-50	DIODE MA111-TX			
D646	8-719-404-50	DIODE MA111-TX			
D654	8-719-404-50	DIODE MA111-TX			
D655	8-719-404-50	DIODE MA111-TX			
D656	8-719-073-32	DIODE D25XB60			
D658	8-719-073-32	DIODE D25XB60			
D660	8-719-404-50	DIODE MA111-TX			
D661	8-719-404-50	DIODE MA111-TX			
D664	8-719-083-87	DIODE UDZSTE-1733B			

Ref. No.	Part No.	Description			Remark
D670	8-719-404-50	DIODE MA111-TX			
D700	8-719-988-61	DIODE 1SS355TE-17			
D701	8-719-988-61	DIODE 1SS355TE-17			
		< GROUND TERMINAL >			
EP605	1-537-738-21	TERMINAL, GROUND			
		< IC >			
IC600	6-600-169-01	IC STK412-240M-E			
IC627	6-703-610-01	IC RT8H015C-T112-1			
		< JUMPER RESISTOR >			
JR647	1-216-864-11	SHORT CHIP	0		
		< TRANSISTOR >			
Q604	8-729-120-28	TRANSISTOR 2SC1623-L5L6			
Q606	8-729-821-00	TRANSISTOR 2SA1207			
Q610	8-729-924-99	TRANSISTOR 2SC3722K-E			
Q618	8-729-924-99	TRANSISTOR 2SC3722K-E			
Q628	8-729-120-28	TRANSISTOR 2SC1623-L5L6			
Q629	8-729-120-28	TRANSISTOR 2SC1623-L5L6			
Q630	8-729-120-28	TRANSISTOR 2SC1623-L5L6			
Q634	8-729-027-31	TRANSISTOR DTA124EKA-T146			
Q635	8-729-027-43	TRANSISTOR DTC114EKA-T146			
Q640	8-729-802-80	TRANSISTOR 2SC3661			
Q641	8-729-802-80	TRANSISTOR 2SC3661			
Q644	8-729-120-28	TRANSISTOR 2SC1623-L5L6			
Q647	8-729-120-28	TRANSISTOR 2SC1623-L5L6			
Q648	8-729-120-28	TRANSISTOR 2SC1623-L5L6			
Q664	8-729-024-93	TRANSISTOR 2SB1565E			
Q668	8-729-924-99	TRANSISTOR 2SC3722K-E			
		< RESISTOR >			
R600	1-216-821-11	METAL CHIP	1K	5%	1/10W
R601	1-216-841-11	METAL CHIP	47K	5%	1/10W
R602	1-216-815-11	METAL CHIP	330	5%	1/10W
R603	1-216-841-11	METAL CHIP	47K	5%	1/10W
R604	1-216-833-11	METAL CHIP	10K	5%	1/10W
R605	1-216-833-11	METAL CHIP	10K	5%	1/10W
R606	1-216-841-11	METAL CHIP	47K	5%	1/10W
R607	1-216-825-11	METAL CHIP	2.2K	5%	1/10W
R608	1-216-845-11	METAL CHIP	100K	5%	1/10W
R609	1-216-843-11	METAL CHIP	68K	5%	1/10W
R610	1-216-843-11	METAL CHIP	68K	5%	1/10W
R611	1-216-839-11	METAL CHIP	33K	5%	1/10W
⚠ R612	1-245-605-51	FUSIBLE	100	5%	1/4W F
⚠ R613	1-215-869-11	METAL OXIDE	1K	5%	1W F
⚠ R614	1-215-869-11	METAL OXIDE	1K	5%	1W F
⚠ R615	1-245-605-51	FUSIBLE	100	5%	1/4W F
⚠ R616	1-217-637-00	FUSIBLE	1	5%	1/4W F
R617	1-216-845-11	METAL CHIP	100K	5%	1/10W
⚠ R618	1-234-499-21	ENCAPSULATED COMPONENT 0.22X2 5W			
R619	1-216-821-11	METAL CHIP	1K	5%	1/10W
R620	1-216-835-11	METAL CHIP	15K	5%	1/10W
R621	1-216-847-11	METAL CHIP	150K	5%	1/10W
R622	1-245-711-31	CARBON	10	5%	1/2W F
R623	1-216-842-11	METAL CHIP	56K	5%	1/10W

Ref. No.	Part No.	Description			Remark
R624	1-216-837-11	METAL CHIP	22K	5%	1/10W
R625	1-216-823-11	METAL CHIP	1.5K	5%	1/10W
R626	1-216-845-11	METAL CHIP	100K	5%	1/10W
R628	1-216-839-11	METAL CHIP	33K	5%	1/10W
R629	1-216-809-11	METAL CHIP	100	5%	1/10W
R630	1-216-845-11	METAL CHIP	100K	5%	1/10W
R631	1-216-845-11	METAL CHIP	100K	5%	1/10W
R632	1-216-854-11	METAL CHIP	560K	5%	1/10W
R633	1-216-841-11	METAL CHIP	47K	5%	1/10W
R634	1-216-825-11	METAL CHIP	2.2K	5%	1/10W
R635	1-216-833-11	METAL CHIP	10K	5%	1/10W
⚠R636	1-215-891-11	METAL OXIDE	680	5%	2W F
⚠R637	1-215-891-11	METAL OXIDE	680	5%	2W F
R638	1-216-845-11	METAL CHIP	100K	5%	1/10W
R639	1-216-845-11	METAL CHIP	100K	5%	1/10W
R640	1-216-833-11	METAL CHIP	10K	5%	1/10W
R641	1-216-833-11	METAL CHIP	10K	5%	1/10W
R642	1-216-806-11	METAL CHIP	56	5%	1/10W
R643	1-216-806-11	METAL CHIP	56	5%	1/10W
R644	1-216-825-11	METAL CHIP	2.2K	5%	1/10W
⚠R646	1-215-863-11	METAL OXIDE	100	5%	1W F
R647	1-216-823-11	METAL CHIP	1.5K	5%	1/10W
R649	1-216-841-11	METAL CHIP	47K	5%	1/10W
R650	1-216-821-11	METAL CHIP	1K	5%	1/10W
R651	1-216-841-11	METAL CHIP	47K	5%	1/10W
R652	1-216-815-11	METAL CHIP	330	5%	1/10W
R653	1-216-841-11	METAL CHIP	47K	5%	1/10W
R654	1-216-841-11	METAL CHIP	47K	5%	1/10W
R655	1-216-841-11	METAL CHIP	47K	5%	1/10W
R656	1-216-849-11	METAL CHIP	220K	5%	1/10W
R657	1-216-849-11	METAL CHIP	220K	5%	1/10W
R658	1-216-849-11	METAL CHIP	220K	5%	1/10W
R659	1-216-849-11	METAL CHIP	220K	5%	1/10W
R660	1-216-837-11	METAL CHIP	22K	5%	1/10W
R661	1-216-837-11	METAL CHIP	22K	5%	1/10W
R662	1-216-832-11	METAL CHIP	8.2K	5%	1/10W
R663	1-216-832-11	METAL CHIP	8.2K	5%	1/10W
R664	1-216-821-11	METAL CHIP	1K	5%	1/10W
R665	1-216-823-11	METAL CHIP	1.5K	5%	1/10W
⚠R668	1-234-499-21	ENCAPSULATED COMPONENT 0.22X2 5W			
R669	1-216-821-11	METAL CHIP	1K	5%	1/10W
R670	1-216-835-11	METAL CHIP	15K	5%	1/10W
R671	1-216-847-11	METAL CHIP	150K	5%	1/10W
R672	1-245-711-31	CARBON	10	5%	1/2W F
R673	1-216-843-11	METAL CHIP	68K	5%	1/10W
R674	1-216-837-11	METAL CHIP	22K	5%	1/10W
R676	1-216-849-11	METAL CHIP	220K	5%	1/10W
R677	1-216-849-11	METAL CHIP	220K	5%	1/10W
R678	1-216-849-11	METAL CHIP	220K	5%	1/10W
R679	1-216-849-11	METAL CHIP	220K	5%	1/10W
R690	1-216-841-11	METAL CHIP	47K	5%	1/10W
R691	1-216-845-11	METAL CHIP	100K	5%	1/10W
R692	1-216-845-11	METAL CHIP	100K	5%	1/10W
R693	1-216-825-11	METAL CHIP	2.2K	5%	1/10W
R694	1-216-843-11	METAL CHIP	68K	5%	1/10W
R698	1-216-845-11	METAL CHIP	100K	5%	1/10W
R699	1-216-845-11	METAL CHIP	100K	5%	1/10W
R700	1-216-841-11	METAL CHIP	47K	5%	1/10W

Ref. No.	Part No.	Description			Remark
R701	1-216-841-11	METAL CHIP	47K	5%	1/10W
		< RELAY >			
RY646	1-755-500-11	RELAY			
		< TERMINAL BOARD >			
TM607	1-816-048-11	TERMINAL BOARD (SPEAKER)			
TM609	1-816-048-11	TERMINAL BOARD (SPEAKER)			
**********					
		POWER SW BOARD			
		**********			
		< DIODE >			
D920	8-719-053-43	LED SLR-325VCT31 (I/⏻)			
		< TRANSISTOR >			
Q900	8-729-027-43	TRANSISTOR DTC114EKA-T146			
		< RESISTOR >			
R1338	1-216-819-11	METAL CHIP	680	5%	1/10W
R1341	1-216-809-11	METAL CHIP	100	5%	1/10W
R1342	1-216-817-11	METAL CHIP	470	5%	1/10W
		< SWITCH >			
S929	1-771-410-21	SWITCH, TACTILE (I/⏻)			
**********					
	A-6060-642-A	SE-130 BOARD, COMPLETE			
		**********			
		< CONNECTOR >			
CN101	1-750-243-11	SOCKET, CONNECTOR 6P			
CN102	1-573-383-11	PIN, CONNECTOR (PC BOARD) 2P			
		< PHOTO SENSOR >			
PH101	8-749-017-45	PHOTO SENSOR RPR-220C1N			
		< IC >			
PH102	6-600-072-01	IC RPI-392			
**********					
		SENSOR BOARD			
		**********			
		< CONNECTOR >			
CN605	1-785-328-11	PIN, CONNECTOR (LIGHT ANGLE) 2P			
		< THERMISTOR >			
TH630	1-807-796-11	THERMISTOR			
**********					
	A-1052-527-A	SURROUND BOARD, COMPLETE (MX)			
	A-4751-060-A	SURROUND BOARD, COMPLETE (US)			
		**********			
		< CAPACITOR >			
C700	1-126-963-11	ELECT	4.7uF	20%	50V

SURROUND **TC-A**

Ref. No.	Part No.	Description			Remark
C701	1-162-966-11	CERAMIC CHIP	0.0022uF	10%	50V
C702	1-104-658-11	ELECT	100uF	20%	10V
C703	1-162-927-11	CERAMIC CHIP	100PF	5%	50V
C721	1-126-965-11	ELECT	22uF	20%	50V
C730	1-136-495-11	FILM	0.068uF	5%	50V
C731	1-136-495-11	FILM	0.068uF	5%	50V
C750	1-126-963-11	ELECT	4.7uF	20%	50V
C751	1-162-966-11	CERAMIC CHIP	0.0022uF	10%	50V
C752	1-104-658-11	ELECT	100uF	20%	10V
C753	1-162-927-11	CERAMIC CHIP	100PF	5%	50V
C780	1-136-495-11	FILM	0.068uF	5%	50V
C781	1-136-495-11	FILM	0.068uF	5%	50V
C791	1-162-970-11	CERAMIC CHIP	0.01uF	10%	25V
C795	1-128-560-11	ELECT	22uF	20%	100V
C796	1-128-560-11	ELECT	22uF	20%	100V
		< DIODE >			
D720	8-719-404-50	DIODE MA111-TX			
D730	8-719-404-50	DIODE MA111-TX			
D760	8-719-404-50	DIODE MA111-TX			
D761	8-719-404-50	DIODE MA111-TX			
D780	8-719-404-50	DIODE MA111-TX			
D790	8-719-056-93	DIODE UDZ-TE-17-18B			
D791	8-719-056-93	DIODE UDZ-TE-17-18B			
		< GROUND TERMINAL >			
EP790	1-537-738-21	TERMINAL, GROUND			
		< IC >			
IC701	6-600-169-01	IC STK412-240M-E			
		< TRANSISTOR >			
Q720	8-729-120-28	TRANSISTOR 2SC1623-L5L6			
Q721	8-729-821-00	TRANSISTOR 2SA1207			
Q722	8-729-924-99	TRANSISTOR 2SC3722K-E			
Q730	8-729-924-99	TRANSISTOR 2SC3722K-E			
Q762	8-729-120-28	TRANSISTOR 2SC1623-L5L6			
Q765	8-729-120-28	TRANSISTOR 2SC1623-L5L6			
Q780	8-729-924-99	TRANSISTOR 2SC3722K-E			
		< RESISTOR >			
R700	1-216-821-11	METAL CHIP	1K	5%	1/10W
R701	1-216-841-11	METAL CHIP	47K	5%	1/10W
R702	1-216-815-11	METAL CHIP	330	5%	1/10W
R710	1-216-841-11	METAL CHIP	47K	5%	1/10W
R711	1-216-841-11	METAL CHIP	47K	5%	1/10W
R720	1-216-833-11	METAL CHIP	10K	5%	1/10W
R721	1-216-833-11	METAL CHIP	10K	5%	1/10W
R722	1-216-841-11	METAL CHIP	47K	5%	1/10W
R723	1-216-825-11	METAL CHIP	2.2K	5%	1/10W
R724	1-216-845-11	METAL CHIP	100K	5%	1/10W
R725	1-216-843-11	METAL CHIP	68K	5%	1/10W
R726	1-216-843-11	METAL CHIP	68K	5%	1/10W
R727	1-216-839-11	METAL CHIP	33K	5%	1/10W
R728	1-216-841-11	METAL CHIP	47K	5%	1/10W
R729	1-216-845-11	METAL CHIP	100K	5%	1/10W
⚠R730	1-234-499-21	ENCAPSULATED COMPONENT 0.22X2 5W			

Ref. No.	Part No.	Description			Remark
R731	1-216-821-11	METAL CHIP	1K	5%	1/10W
R732	1-216-835-11	METAL CHIP	15K	5%	1/10W
R733	1-216-847-11	METAL CHIP	150K	5%	1/10W
R734	1-216-842-11	METAL CHIP	56K	5%	1/10W
R735	1-245-711-31	CARBON	10	5%	1/2W F
R736	1-216-843-11	METAL CHIP	68K	5%	1/10W
R737	1-216-845-11	METAL CHIP	100K	5%	1/10W
R750	1-216-821-11	METAL CHIP	1K	5%	1/10W
R751	1-216-841-11	METAL CHIP	47K	5%	1/10W
R752	1-216-815-11	METAL CHIP	330	5%	1/10W
⚠R764	1-215-863-11	METAL OXIDE	100	5%	1W F
R766	1-216-825-11	METAL CHIP	2.2K	5%	1/10W
⚠R780	1-234-499-21	ENCAPSULATED COMPONENT 0.22X2 5W			
R781	1-216-821-11	METAL CHIP	1K	5%	1/10W
R782	1-216-835-11	METAL CHIP	15K	5%	1/10W
R783	1-216-847-11	METAL CHIP	150K	5%	1/10W
R784	1-216-843-11	METAL CHIP	68K	5%	1/10W
R785	1-245-711-31	CARBON	10	5%	1/2W F
R788	1-216-823-11	METAL CHIP	1.5K	5%	1/10W
R792	1-216-845-11	METAL CHIP	100K	5%	1/10W
⚠R793	1-217-637-00	FUSIBLE	1	5%	1/4W F
⚠R794	1-245-605-51	FUSIBLE	100	5%	1/4W F
⚠R795	1-245-605-51	FUSIBLE	100	5%	1/4W F
⚠R796	1-215-869-11	METAL OXIDE	1K	5%	1W F
⚠R797	1-215-869-11	METAL OXIDE	1K	5%	1W F
R798	1-216-845-11	METAL CHIP	100K	5%	1/10W
R799	1-216-845-11	METAL CHIP	100K	5%	1/10W
		< RELAY >			
RY760	1-755-500-11	RELAY			

****

TC-A BOARD
****

		< CONNECTOR >			
CN914	1-785-329-11	PIN, CONNECTOR (LIGHT ANGLE) 3P			
CN915	1-785-333-11	PIN, CONNECTOR (LIGHT ANGLE) 7P			
		< DIODE >			
D918	8-719-060-27	LED SLR-325MCT31 (◁)			
D919	8-719-060-27	LED SLR-325MCT31 (▷)			
		< JUMPER RESISTOR >			
JR903	1-216-864-11	SHORT CHIP	0		
		< TRANSISTOR >			
Q907	8-729-027-43	TRANSISTOR DTC114EKA-T146			
		< RESISTOR >			
R833	1-216-819-11	METAL CHIP	680	5%	1/10W
R835	1-216-819-11	METAL CHIP	680	5%	1/10W
R837	1-216-833-11	METAL CHIP	10K	5%	1/10W
R840	1-218-867-11	METAL CHIP	6.8K	0.5%	1/10W
R842	1-216-809-11	METAL CHIP	100	5%	1/10W
R843	1-216-829-11	METAL CHIP	4.7K	5%	1/10W
R844	1-216-827-11	METAL CHIP	3.3K	5%	1/10W

Ref. No.	Part No.	Description			Remark
R845	1-216-825-11	METAL CHIP	2.2K	5%	1/10W
R846	1-216-823-11	METAL CHIP	1.5K	5%	1/10W
		< SWITCH >			
S931	1-771-410-21	SWITCH, TACTILE (⏮ ◀◀)			
S932	1-771-410-21	SWITCH, TACTILE (▶▶ ⏭)			
S933	1-771-410-21	SWITCH, TACTILE (FUNCTION)			
S934	1-771-410-21	SWITCH, TACTILE (■)			
S935	1-771-410-21	SWITCH, TACTILE (◁)			
S936	1-771-410-21	SWITCH, TACTILE (▷)			

****

	A-1052-746-A	TC-B BOARD, COMPLETE (MX)			
	A-4751-063-A	TC-B BOARD, COMPLETE (US)			
		**********			
		< CONNECTOR >			
CN905	1-785-331-11	PIN, CONNECTOR (LIGHT ANGLE) 5P			
CN916	1-785-335-11	PIN, CONNECTOR (LIGHT ANGLE) 9P			
		< DIODE >			
D921	8-719-060-27	LED SLR-325MCT31 (GAME)			
D922	8-719-053-43	LED SLR-325VCT31 (REC PAUSE/START)			
D923	8-719-060-27	LED SLR-325MCT31 (◁)			
D924	8-719-060-27	LED SLR-325MCT31 (▷)			
		< JUMPER RESISTOR >			
JR907	1-216-864-11	SHORT CHIP	0		
JR908	1-216-864-11	SHORT CHIP	0		
		< TRANSISTOR >			
Q909	8-729-027-43	TRANSISTOR DTC114EKA-T146			
Q910	8-729-027-43	TRANSISTOR DTC114EKA-T146			
		< RESISTOR >			
R847	1-216-819-11	METAL CHIP	680	5%	1/10W
R848	1-216-825-11	METAL CHIP	2.2K	5%	1/10W
R849	1-216-819-11	METAL CHIP	680	5%	1/10W
R850	1-216-809-11	METAL CHIP	100	5%	1/10W
R852	1-216-823-11	METAL CHIP	1.5K	5%	1/10W
R855	1-216-823-11	METAL CHIP	1.5K	5%	1/10W
R857	1-216-819-11	METAL CHIP	680	5%	1/10W
R858	1-216-821-11	METAL CHIP	1K	5%	1/10W
R859	1-216-819-11	METAL CHIP	680	5%	1/10W
R860	1-216-809-11	METAL CHIP	100	5%	1/10W
R861	1-216-819-11	METAL CHIP	680	5%	1/10W
R864	1-216-817-11	METAL CHIP	470	5%	1/10W
R868	1-216-835-11	METAL CHIP	15K	5%	1/10W
R869	1-216-833-11	METAL CHIP	10K	5%	1/10W
R870	1-218-867-11	METAL CHIP	6.8K	0.5%	1/10W
		< SWITCH >			
S940	1-771-410-21	SWITCH, TACTILE (REC PAUSE/START)			
S941	1-771-410-21	SWITCH, TACTILE (GAME)			
S942	1-771-410-21	SWITCH, TACTILE (GAME MIXING)			
S943	1-771-410-21	SWITCH, TACTILE (CD SYNC)			
S944	1-771-410-21	SWITCH, TACTILE (▶▶ ⏭)			
S945	1-771-410-21	SWITCH, TACTILE (⏮ ◀◀)			
S947	1-771-410-21	SWITCH, TACTILE (■)			
S948	1-771-410-21	SWITCH, TACTILE (◁)			
S949	1-771-410-21	SWITCH, TACTILE (▷)			

****

	1-861-385-11	TRANS BOARD			
		**********			
	1-533-217-41	HOLDER, FUSE			
		< CAPACITOR >			
C1192	1-128-576-11	ELECT	100uF	20%	63V
		< CONNECTOR >			
* CN1112	1-564-521-11	PLUG, CONNECTOR 6P			
* CN1113	1-564-520-11	PLUG, CONNECTOR 5P			
		< DIODE >			
D1192	6-500-522-21	DIODE 10EDB40-TB3			
		< RESISTOR >			
R1133	1-219-237-11	SOLID	3.3M	20%	1/2W (US)
⚠R1192	1-219-124-11	FUSIBLE	0.68	5%	1/4W F

****

	A-1052-687-A	VOL BOARD, COMPLETE (MX)			
	A-4751-069-A	VOL BOARD, COMPLETE (US)			
		**********			
		< CAPACITOR >			
C967	1-107-826-11	CERAMIC CHIP	0.1uF	10%	16V
C968	1-107-826-11	CERAMIC CHIP	0.1uF	10%	16V
C969	1-107-826-11	CERAMIC CHIP	0.1uF	10%	16V
C971	1-107-826-11	CERAMIC CHIP	0.1uF	10%	16V
		< CONNECTOR >			
CN928	1-785-328-11	PIN, CONNECTOR (LIGHT ANGLE) 2P			
		< DIODE >			
D907	6-500-424-01	LED SLI-325DCT31W (ILLUMINATION)			
D908	6-500-424-01	LED SLI-325DCT31W (ILLUMINATION)			
D909	6-500-424-01	LED SLI-325DCT31W (ILLUMINATION)			
D910	6-500-424-01	LED SLI-325DCT31W (ILLUMINATION)			
D911	6-500-424-01	LED SLI-325DCT31W (ILLUMINATION)			
D912	6-500-424-01	LED SLI-325DCT31W (ILLUMINATION)			
D913	6-500-424-01	LED SLI-325DCT31W (ILLUMINATION)			
D914	6-500-424-01	LED SLI-325DCT31W (ILLUMINATION)			
D915	6-500-424-01	LED SLI-325DCT31W (ILLUMINATION)			
D916	6-500-424-01	LED SLI-325DCT31W (ILLUMINATION)			
D917	6-500-424-01	LED SLI-325DCT31W (ILLUMINATION)			
		< JUMPER RESISTOR >			
JR909	1-216-864-11	SHORT CHIP	0		
JR910	1-216-864-11	SHORT CHIP	0		
JR911	1-216-864-11	SHORT CHIP	0		
JR912	1-216-864-11	SHORT CHIP	0		
JR913	1-216-864-11	SHORT CHIP	0		
		< TRANSISTOR >			
Q911	8-729-027-43	TRANSISTOR DTC114EKA-T146			
Q912	8-729-027-43	TRANSISTOR DTC114EKA-T146			

VOL VOLTAGE SELECTOR

Ref. No.	Part No.	Description			Remark
Q913	8-729-027-43	TRANSISTOR DTC114EKA-T146			
Q914	8-729-027-43	TRANSISTOR DTC114EKA-T146			
Q915	8-729-027-43	TRANSISTOR DTC114EKA-T146			
		< RESISTOR >			
R960	1-218-867-11	METAL CHIP	6.8K	0.5%	1/10W
R961	1-216-829-11	METAL CHIP	4.7K	5%	1/10W
R962	1-216-827-11	METAL CHIP	3.3K	5%	1/10W
R963	1-216-825-11	METAL CHIP	2.2K	5%	1/10W
R964	1-216-823-11	METAL CHIP	1.5K	5%	1/10W
R965	1-216-823-11	METAL CHIP	1.5K	5%	1/10W
R966	1-216-821-11	METAL CHIP	1K	5%	1/10W
R967	1-216-819-11	METAL CHIP	680	5%	1/10W
R968	1-216-817-11	METAL CHIP	470	5%	1/10W
R969	1-216-817-11	METAL CHIP	470	5%	1/10W
R970	1-216-819-11	METAL CHIP	680	5%	1/10W
R971	1-216-821-11	METAL CHIP	1K	5%	1/10W
R972	1-216-823-11	METAL CHIP	1.5K	5%	1/10W
R973	1-216-823-11	METAL CHIP	1.5K	5%	1/10W
R974	1-216-825-11	METAL CHIP	2.2K	5%	1/10W
R975	1-216-827-11	METAL CHIP	3.3K	5%	1/10W
R976	1-216-829-11	METAL CHIP	4.7K	5%	1/10W
R1300	1-216-821-11	METAL CHIP	1K	5%	1/10W
R1301	1-216-809-11	METAL CHIP	100	5%	1/10W
R1302	1-216-821-11	METAL CHIP	1K	5%	1/10W
R1303	1-216-821-11	METAL CHIP	1K	5%	1/10W
R1306	1-216-821-11	METAL CHIP	1K	5%	1/10W
R1308	1-216-809-11	METAL CHIP	100	5%	1/10W
R1309	1-216-821-11	METAL CHIP	1K	5%	1/10W
R1310	1-216-821-11	METAL CHIP	1K	5%	1/10W
R1313	1-216-821-11	METAL CHIP	1K	5%	1/10W
R1315	1-216-809-11	METAL CHIP	100	5%	1/10W
R1316	1-216-821-11	METAL CHIP	1K	5%	1/10W
R1317	1-216-821-11	METAL CHIP	1K	5%	1/10W
R1320	1-216-821-11	METAL CHIP	1K	5%	1/10W
R1322	1-216-809-11	METAL CHIP	100	5%	1/10W
R1323	1-216-821-11	METAL CHIP	1K	5%	1/10W
R1324	1-216-821-11	METAL CHIP	1K	5%	1/10W
R1327	1-216-821-11	METAL CHIP	1K	5%	1/10W
R1329	1-216-809-11	METAL CHIP	100	5%	1/10W
R1330	1-216-821-11	METAL CHIP	1K	5%	1/10W
R1331	1-216-821-11	METAL CHIP	1K	5%	1/10W
R1335	1-216-821-11	METAL CHIP	1K	5%	1/10W
R1336	1-216-821-11	METAL CHIP	1K	5%	1/10W
R1337	1-216-821-11	METAL CHIP	1K	5%	1/10W
		< SWITCH >			
S904	1-771-410-21	SWITCH, TACTILE (SALSA)			
S905	1-771-410-21	SWITCH, TACTILE (REGGAE)			
S906	1-771-410-21	SWITCH, TACTILE (POP)			
S907	1-771-410-21	SWITCH, TACTILE (SAMBA)			
S908	1-771-410-21	SWITCH, TACTILE (TANGO)			
S909	1-771-410-21	SWITCH, TACTILE (SURROUND)			
S910	1-771-410-21	SWITCH, TACTILE (P FILE)			
S911	1-771-410-21	SWITCH, TACTILE (X GROOVE)			
S913	1-771-410-21	SWITCH, TACTILE (ROCK)			
S914	1-771-410-21	SWITCH, TACTILE (JAZZ)			
S915	1-771-410-21	SWITCH, TACTILE (DANCE)			
S916	1-771-410-21	SWITCH, TACTILE (MOVIE)			
S917	1-771-410-21	SWITCH, TACTILE (GAME)			
S918	1-771-410-21	SWITCH, TACTILE (AMP MENU)			
S919	1-771-410-21	SWITCH, TACTILE (EFFECT ON/OFF)			
S975	1-418-725-51	ENCODER, ROTARY (12 TYPE) (VOLUME)			

****

	1-861-384-11	VOLTAGE SELECTOR BOARD			
		**********			
		< CAPACITOR >			
C1001	1-164-156-11	CERAMIC CHIP	0.1uF		25V
C1002	1-164-156-11	CERAMIC CHIP	0.1uF		25V
C1004	1-164-156-11	CERAMIC CHIP	0.1uF		25V
C1006	1-126-916-11	ELECT	1000uF	20%	6.3V
		< CONNECTOR >			
CN1000	1-785-329-11	PIN, CONNECTOR (LIGHT ANGLE) 3P			
CN1002	1-564-321-00	PIN, CONNECTOR (3.96mm PITCH) 2P			
CN1004	1-564-321-00	PIN, CONNECTOR (3.96mm PITCH) 2P			
		< DIODE >			
D1000	8-719-404-50	DIODE MA111-TX			
		< JUMPER RESISTOR >			
JR1002	1-216-864-11	SHORT CHIP	0		
		< COIL >			
L1001	1-410-666-31	INDUCTOR	18uH		
		< TRANSISTOR >			
Q1000	8-729-120-28	TRANSISTOR 2SC1623-L5L6			
		< RESISTOR >			
R1000	1-216-829-11	METAL CHIP	4.7K	5%	1/10W
R1001	1-216-845-11	METAL CHIP	100K	5%	1/10W
		< RELAY >			
⚠RY1000	1-755-299-11	RELAY			

****

Ref. No.	Part No.	Description	Remark
		MISCELLANEOUS	
		**********	
5	1-769-939-11	WIRE (FLAT TYPE) (11 CORE)	
⚠6	1-468-737-51	SWITCHING, POWER (MX)	
⚠6	1-468-737-71	SWITCHING, POWER (US)	
57	1-773-163-11	WIRE (FLAT TYPE) (21 CORE)	
58	1-796-487-71	DECK, MECHANICAL	
62	1-769-992-11	WIRE (FLAT TYPE) (13 CORE)	
⚠157	1-783-820-11	CORD, POWER (US)	
⚠157	1-829-627-11	POWER-SUPPLY CORD (MX)	
207	1-823-921-11	FMS-18	
⚠265	8-820-244-01	OPTICAL PICK-UP (KSM-215DCP/C2NP)	
272	1-832-404-21	CABLE, FLEXIBLE FLAT (16 CORE)	
273	1-452-925-21	MAGNET ASSY	
⚠F1141	1-533-949-33	FUSE, CYLINDRICAL (TIME LAG) (8A/250V) (US)	
⚠F1141	1-576-655-12	FUSE, GLASS TUBE (DIA. 5) (8A/250V) (MX)	
⚠F1151	1-533-949-33	FUSE, CYLINDRICAL (TIME LAG) (8A/250V) (US)	
⚠F1151	1-576-655-12	FUSE, GLASS TUBE (DIA. 5) (8A/250V) (MX)	
⚠F1161	1-533-949-33	FUSE, CYLINDRICAL (TIME LAG) (8A/250V) (US)	
⚠F1161	1-576-655-12	FUSE, GLASS TUBE (DIA. 5) (8A/250V) (MX)	
⚠F1171	1-533-949-33	FUSE, CYLINDRICAL (TIME LAG) (8A/250V) (US)	
⚠F1171	1-576-655-12	FUSE, GLASS TUBE (DIA. 5) (8A/250V) (MX)	
⚠F1181	1-532-504-33	FUSE (TIME LAG) (4A/250V) (US)	
⚠F1181	1-533-471-12	FUSE, GLASS TUBE (DIA. 5) (4A/250V) (MX)	
FAN901	1-763-372-11	FAN, DC	
FC901	1-500-868-11	CORE, FERRITE	
M901	X-3952-411-1	MOTOR ASSY, LOADING (LOADING)	
RE901	1-418-746-11	ENCODER, ROTARY	
S101	1-771-853-11	SWITCH, DETECTION (LIMIT)	
⚠T1100	1-443-195-11	TRANSFORMER, POWER (MX)	
⚠T1100	1-445-175-11	TRANSFORMER, POWER (US)	
TU901	1-693-603-11	TUNER (FM/AM) (MX)	
TU901	1-693-623-31	TUNER (FM/AM) (US)	

REVISION HISTORY

Clicking the version allows you to jump to the revised page.
Also, clicking the version at the upper on the revised page allows you to jump to the next revised page.

Ver.	Date	Description of Revision
1.0	2006.08	New
1.1	2007.01	US model addition.
1.2	2007.02	Correction of part number of fuse of US model. (F1141, F1151, F1161, F1171, F1181) (ENG-07002)