CDX-GT700D/GT705DX

SERVICE MANUAL

Ver. 1.0 2005.12

US Model
Canadian Model
CDX-GT705DX
AEP Model
UK Model
E Model
CDX-GT700D

Photo: CDX-GT700D

• The tuner and CD sections have no adjustments.

AUDIO POWER SPECIFICATIONS (US MODEL)
POWER OUTPUT AND TOTAL HARMONIC DISTORTION
23.2 watts per channel minimum continuous average power into 4 ohms, 4 channels driven from 20 Hz to 20 kHz with no more than 5% total harmonic distortion.

Model Name Using Similar Mechanism	CDX-GT800D/GT805DX
CD Drive Mechanism Type	MG-611WD-186//Q
Optical Pick-up Name	KSS1000E

SPECIFICATIONS

CD player section

Signal-to-noise ratio	120 dB
Frequency response	10 – 20,000 Hz
Wow and flutter	Below measurable limit

Tuner section

FM

Tuning range	CDX-GT705DX: 87.5 – 107.9 MHz CDX-GT700D: 87.5 – 108 MHz
Antenna terminal	External antenna connector
Intermediate frequency	10.7 MHz/450 kHz
Usable sensitivity	9 dBf
Selectivity	75 dB at 400 kHz
Signal-to-noise ratio	67 dB (stereo), 69 dB (mono)
Harmonic distortion at 1 kHz	0.5% (stereo), 0.3% (mono)
Separation	35 dB at 1 kHz
Frequency response	30 – 15,000 Hz

AM (CDX-GT705DX)

Tuning range	530 – 1,710 kHz
Antenna terminal	External antenna connector
Intermediate frequency	10.7 MHz/450 kHz
Sensitivity	30 µV

MW/LW (CDX-GT700D)

Tuning range	MW: 531 – 1,602 kHz LW: 153 – 279 kHz
Antenna terminal	External antenna connector
Intermediate frequency	10.7 MHz/450 kHz
Sensitivity	MW: 30 µV LW: 40 µV

Power amplifier section

Outputs	Speaker outputs (sure seal connectors)
Speaker impedance	4 – 8 ohms
Maximum power output	52 W × 4 (at 4 ohms)

General

Outputs	Audio outputs terminal (front/rear) Subwoofer output terminal (mono) Power antenna relay control terminal Power amplifier control terminal
Inputs	Telephone ATT control terminal Illumination control terminal BUS control input terminal BUS audio input/AUX IN terminal Remote controller input terminal Antenna input terminal
Loudness	+8 dB at 100 Hz +0 dB at 10 kHz

– Continued on next page –

FM/AM COMPACT DISC PLAYER
CDX-GT705DX
FM/MW/LW COMPACT DISC PLAYER
CDX-GT700D

9-887-002-01
2005L04-1
© 2005.12

Sony Corporation
eVehicle Division
Published by Sony Engineering Corporation

SONY®

Power requirements	12 V DC car battery (negative ground)
Dimensions	Approx. 178 × 50 × 180 mm (7 1/8 × 2 × 7 1/8 in.) (w/h/d)
Mounting dimensions	Approx. 182 × 53 × 162 mm (7 1/4 × 2 1/8 × 6 1/2 in.) (w/h/d)
Mass	Approx. 1.3 kg (3 lb 5 oz)
Supplied accessories	Parts for installation and connections (1 set) Card remote commander RM-X152 (CDX-GT705DX) Card remote commander RM-X154 (CDX-GT700D)

US and foreign patents licensed from Dolby Laboratories.

Note
This unit cannot be connected to a digital preamplifier or an equalizer which is Sony BUS system compatible.

Design and specifications are subject to change without notice.

SERVICE NOTES

NOTES ON HANDLING THE OPTICAL PICK-UP BLOCK OR BASE UNIT

The laser diode in the optical pick-up block may suffer electrostatic breakdown because of the potential difference generated by the charged electrostatic load, etc. on clothing and the human body.
During repair, pay attention to electrostatic breakdown and also use the procedure in the printed matter which is included in the repair parts.
The flexible board is easily damaged and should be handled with care.

NOTES ON LASER DIODE EMISSION CHECK

The laser beam on this model is concentrated so as to be focused on the disc reflective surface by the objective lens in the optical pick-up block. Therefore, when checking the laser diode emission, observe from more than 30 cm away from the objective lens.

Notes on Chip Component Replacement

- Never reuse a disconnected chip component.
- Notice that the minus side of a tantalum capacitor may be damaged by heat.

TEST DISCS

This set can playback CD-R and CD-ROM discs. The following test discs should be used to check the capability:

CD-R test disc TCD-R082LMT (Part No. J-2502-063-1)
CD-RW test disc TCD-W082L (Part No. J-2502-063-2)

CAUTION
Use of controls or adjustments or performance of procedures other than those specified herein may result in hazardous radiation exposure.

If the optical pick-up block is defective, please replace the whole optical pick-up block.
Never turn the semi-fixed resistor located at the side of optical pick-up block.

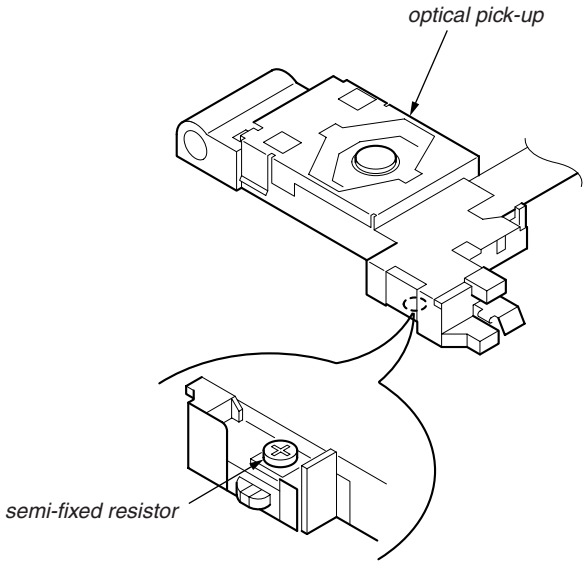

• CDX-GT700D model

CLASS 1
LASER PRODUCT

This label is located on the bottom of the chassis.

SAFETY-RELATED COMPONENT WARNING!!

COMPONENTS IDENTIFIED BY MARK ⚠ OR DOTTED LINE WITH MARK ⚠ ON THE SCHEMATIC DIAGRAMS AND IN THE PARTS LIST ARE CRITICAL TO SAFE OPERATION. REPLACE THESE COMPONENTS WITH SONY PARTS WHOSE PART NUMBERS APPEAR AS SHOWN IN THIS MANUAL OR IN SUPPLEMENTS PUBLISHED BY SONY.

ATTENTION AU COMPOSANT AYANT RAPPORT À LA SÉCURITÉ!!

LES COMPOSANTS IDENTIFIÉS PAR UNE MARQUE ⚠ SUR LES DIAGRAMMES SCHÉMATIQUES ET LA LISTE DES PIÈCES SONT CRITIQUES POUR LA SÉCURITÉ DE FONCTIONNEMENT. NE REMPLACER CES COMPOSANTS QUE PAR DES PIÈCES SONY DONT LES NUMÉROS SONT DONNÉS DANS CE MANUEL OU DANS LES SUPPLÉMENTS PUBLIÉS PAR SONY.

- CD Playback:
  You can play CD-DA (also containing CD TEXT*1), CD-R/CD-RW (MP3/WMA files also containing Multi Session and ATRAC CD (ATRAC3 and ATRAC3plus format).

Type of discs	Label on the disc
CD-DA	COMPACT disc DIGITAL AUDIO Recordable / COMPACT disc DIGITAL AUDIO ReWritable
MP3 WMA ATRAC CD	COMPACT disc DIGITAL AUDIO Recordable / COMPACT disc DIGITAL AUDIO ReWritable COMPACT disc Recordable / COMPACT disc ReWritable

*1 A CD TEXT disc is a CD-DA that includes information such as disc, artist and track name.

EXTENSION CABLE AND SERVICE POSITION

When repairing or servicing this set, connect the jig (extension cable) as shown below.

- Connect the MAIN board (CNP301) and the SERVO board (CN2) with the extension cable (Part No. J-2502-076-1).

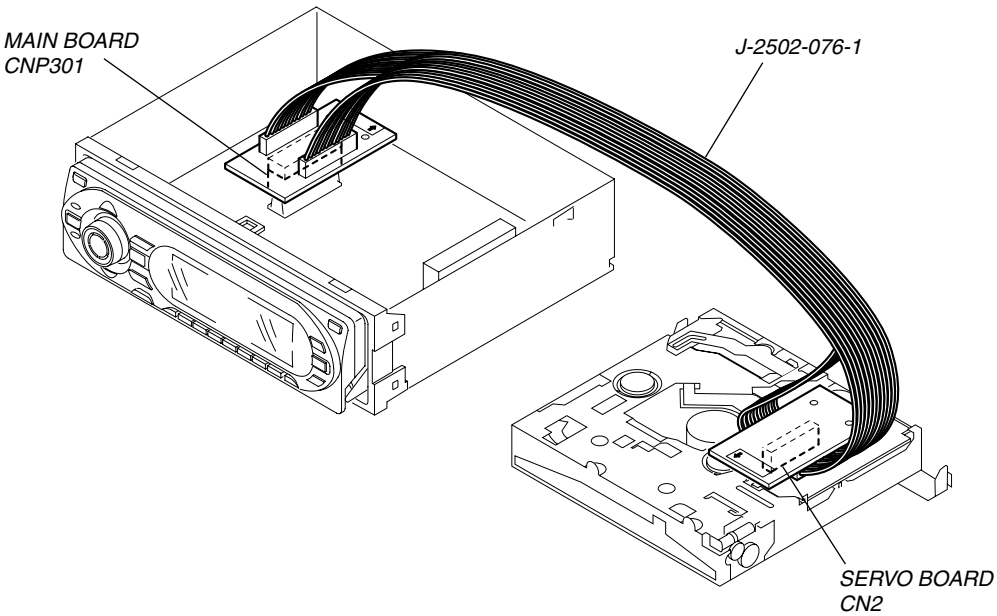

● UNLEADED SOLDER

Boards requiring use of unleaded solder are printed with the lead-free mark (LF) indicating the solder contains no lead.
(Caution: Some printed circuit boards may not come printed with the lead free mark due to their particular size.)

: LEAD FREE MARK

Unleaded solder has the following characteristics.

- Unleaded solder melts at a temperature about 40°C higher than ordinary solder.
  Ordinary soldering irons can be used but the iron tip has to be applied to the solder joint for a slightly longer time.
  Soldering irons using a temperature regulator should be set to about 350°C.
  Caution: The printed pattern (copper foil) may peel away if the heated tip is applied for too long, so be careful!
- Strong viscosity
  Unleaded solder is more viscous (sticky, less prone to flow) than ordinary solder so use caution not to let solder bridges occur such as on IC pins, etc.
- Usable with ordinary solder
  It is best to use only unleaded solder but unleaded solder may also be added to ordinary solder.

TABLE OF CONTENTS

1. GENERAL
Location of Controls 5
Connections 5

2. DISASSEMBLY
2-1. Sub (FL) Panel Assy 12
2-2. CD Mechanism Block 12
2-3. Main Board 13
2-4. Chassis (T) Sub Assy 13
2-5. Roller Arm Assy 14
2-6. Chassis (OP) Assy 14
2-7. Optical Pick-up 15
2-8. SL Motor Assy (M902) 15
2-9. LE Motor Assy (M903) 16
2-10. Servo Board 16

3. DIAGNOSIS FUNCTION 17

4. DIAGRAMS
4-1. Block Diagram –CD Section– 19
4-2. Block Diagram –Main Section– 20
4-3. Block Diagram –Display Section– 21
4-4. Circuit Boards Location 22
4-5. Printed Wiring Boards –CD Mechanism Section– 23
4-6. Schematic Diagram –CD Mechanism Section (1/2)– 24
4-7. Schematic Diagram –CD Mechanism Section (2/2)– 25
4-8. Printed Wiring Board –Main Section– 26
4-9. Schematic Diagram –Main Section (1/4)– 28
4-10. Schematic Diagram –Main Section (2/4)– 29
4-11. Schematic Diagram –Main Section (3/4)– 30
4-12. Schematic Diagram –Main Section (4/4)– 31
4-13. Printed Wiring Boards –Sub Section– 32
4-14. Printed Wiring Board –Display Section– 33
4-15. Schematic Diagram –Display Section– 34

5. EXPLODED VIEWS
5-1. Main Section 46
5-2. Front Panel Section 47
5-3. CD Mechanism Section (1) 48
5-4. CD Mechanism Section (2) 49
5-5. CD Mechanism Section (3) 50
5-6. CD Mechanism Section (4) 51

6. ELECTRICAL PARTS LIST 52

SECTION 1
GENERAL

This section is extracted from instruction manual.

• LOCATION OF CONTROLS
• CDX-GT700D (AEP, UK Model)

Location of controls and basic operations

Main unit

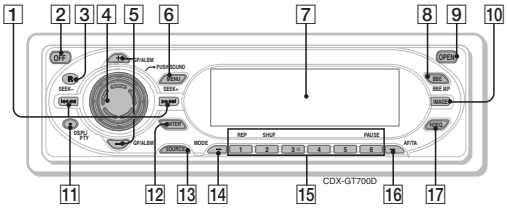

Front panel removed

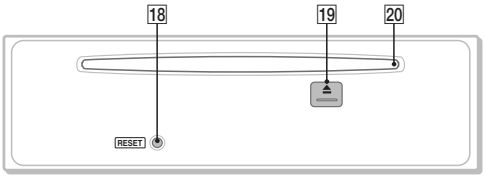

Card remote commander RM-X154

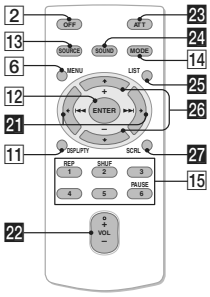

Refer to the pages listed for details. The corresponding buttons on the card remote commander control the same functions as those on the unit.

1 **SEEK –/+ buttons**
CD:
To skip tracks (press); skip tracks continuously (press, then press again within about 1 second and hold); fast-forward/reverse a track (press and hold).
Radio:
To tune in stations automatically (press); find a station manually (press and hold).

2 **OFF button**
To power off/stop the source.

3 **Receptor**
To receive signals from the card remote commander.

4 **VOL (volume) control dial/SOUND button** 16
To adjust volume (rotate); select sound items (press).

5 **GP*1/ALBM*2 +/– buttons*3**
To select preset stations/skip groups (press); skip groups continuously (press and hold).

6 **MENU button**
To enter menu.

7 **Display window**

8 **BBE MP button** 2, 12, 13
To activate the BBE MP function.

9 **OPEN button** 5

10 **IMAGE button** 2
To select the display image.
Movie mode 1-3 → Spectrum analyzer mode 1-5 → Space Producer mode → Wall paper mode 1-3 → normal play/reception mode

11 **DSPL (display)/PTY (Programme Type) button** 8, 10
To change display items; to select PTY in RDS.

12 **ENTER button**
To complete a setting.

13 **SOURCE button**
To power on/change the source (Radio/CD/MD*5/AUX).

14 **MODE button** 8, 17
To select the radio band (FM/MW/LW)/select the unit*4.

15 **Number buttons**
Radio:
To receive stored stations (press); store stations (press and hold).
CD/MD*5:
(1): **REP** 8, 18
(2): **SHUF** 8, 18
(6): **PAUSE***6
To pause playback. To cancel, press again.

16 **AF (Alternative Frequencies)/TA (Traffic Announcement) button** 10
To set AF and TA/TP in RDS.

17 **HDEQ button** 11, 12
To select an equalizer type (Flat, Xplod, Refined Vocal, Over Drive, Virtual Sub, Natural Cruise or Rear Drive)

18 **RESET button** 4

19 **⏏ (eject) button** 5
To eject the disc.

20 **Disc slot** 5
To insert the disc.

The following buttons on the card remote commander have also different buttons/functions from the unit.

21 **←/→ (SEEK –/+) buttons**
To control CD/Radio, the same as (SEEK –/+ on the unit.

22 **VOL (volume) +/– button**
To adjust volume.

23 **ATT (attenuate) button**
To attenuate the sound. To cancel, press again.

24 **SOUND button**
To select sound items.

25 **LIST button** 9, 18
To list up.

26 **↑/↓ (+/–) buttons**
To control CD, the same as (GP/ALBM +/– on the unit.

27 **SCRL (scroll) button** 8
To scroll the display item.

*1 *When an ATRAC CD is played.*
*2 *When an MP3/WMA is played.*
*3 *If the changer is connected, the operation is different, see page 17.*
*4 *When a CD/MD changer is connected.*
*5 *When an MD changer is connected.*
*6 *When playing back on this unit.*

Note
If the unit is turned off and the display disappears, it cannot be operated with the card remote commander unless (SOURCE) on the unit is pressed, or a disc is inserted to activate the unit first.

Tip
For details on how to replace the battery, see "Replacing the lithium battery of the card remote commander" on page 21.

• CONNECTIONS
• CDX-GT700D (AEP, UK Model)

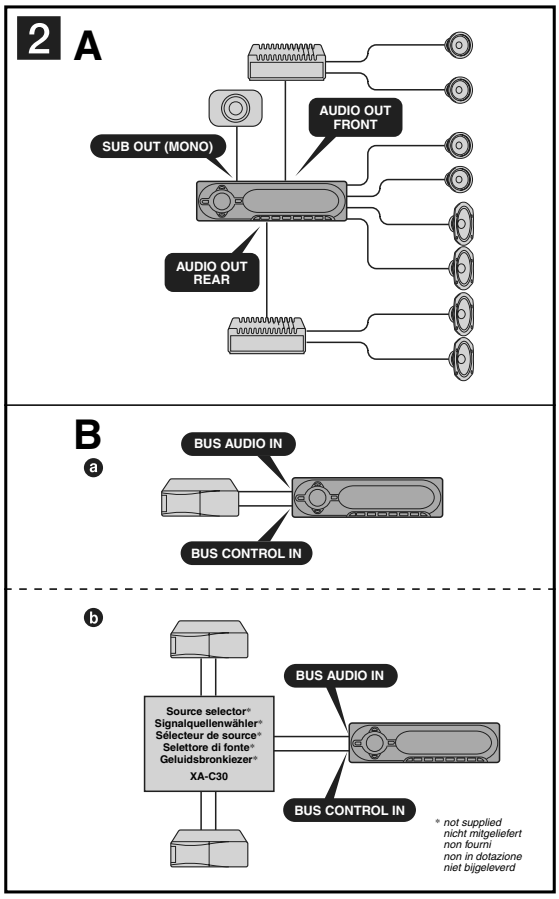

Connection example 2

Notes **(2-A)**
- *Be sure to connect the earth lead before connecting the amplifier.*
- *The alarm will only sound if the built-in amplifier is used.*

Tip **(2-B-b)**
For connecting two or more CD/MD changers, the source selector XA-C30 (not supplied) is necessary.

Anschlussbeispiel 2

Hinweise **(2-A)**
- *Schließen Sie unbedingt zuerst das Massekabel an, bevor Sie den Verstärker anschließen.*
- *Der Signalton wird nur ausgegeben, wenn der integrierte Verstärker verwendet wird.*

Tipp **(2-B-b)**
Zum Anschließen von zwei oder mehr CD/MD-Wechslern wird der Signalquellenwähler Cuight mitgeliefert (night mitgeliefert) XA-C30 benötigt.

Exemple de raccordement 2

Remarques **(2-A)**
- *Raccordez d'abord le câble de mise à la masse avant de connecter l'amplificateur.*
- *Un bip est émis uniquement lorsque l'amplificateur intégré est utilisé.*

Conseil **(2-B-b)**
Dans le cas du raccordement de deux changeurs de CD/MD ou plus, le sélecteur de source XA-C30 (non fourni) est indispensable.

Esempio di collegamento 2

Note **(2-A)**
- *Assicurarsi di collegare il cavo di terra prima di collegare l'amplificatore.*
- *Il segnale acustico viene emesso solo se viene utilizzato l'amplificatore incorporato.*

Suggerimento **(2-B-b)**
Per collegare due o più cambia CD/MD, si deve utilizzare il selettore di fonte XA-C30 (non in dotazione).

Voorbeeldaansluitingen 2

Opmerkingen **(2-A)**
- *Sluit eerst de aarddraad aan voordat u de versterker aansluit.*
- *U hoort de pieptoon alleen als de ingebouwde versterker wordt gebruikt.*

Tip **(2-B-b)**
Om twee of meer CD/MD-wisselaars aan te sluiten, hebt u de geluidsbronkiezer XA-C30 (niet bijgeleverd) nodig.

• CDX-GT700D (AEP, UK Model)

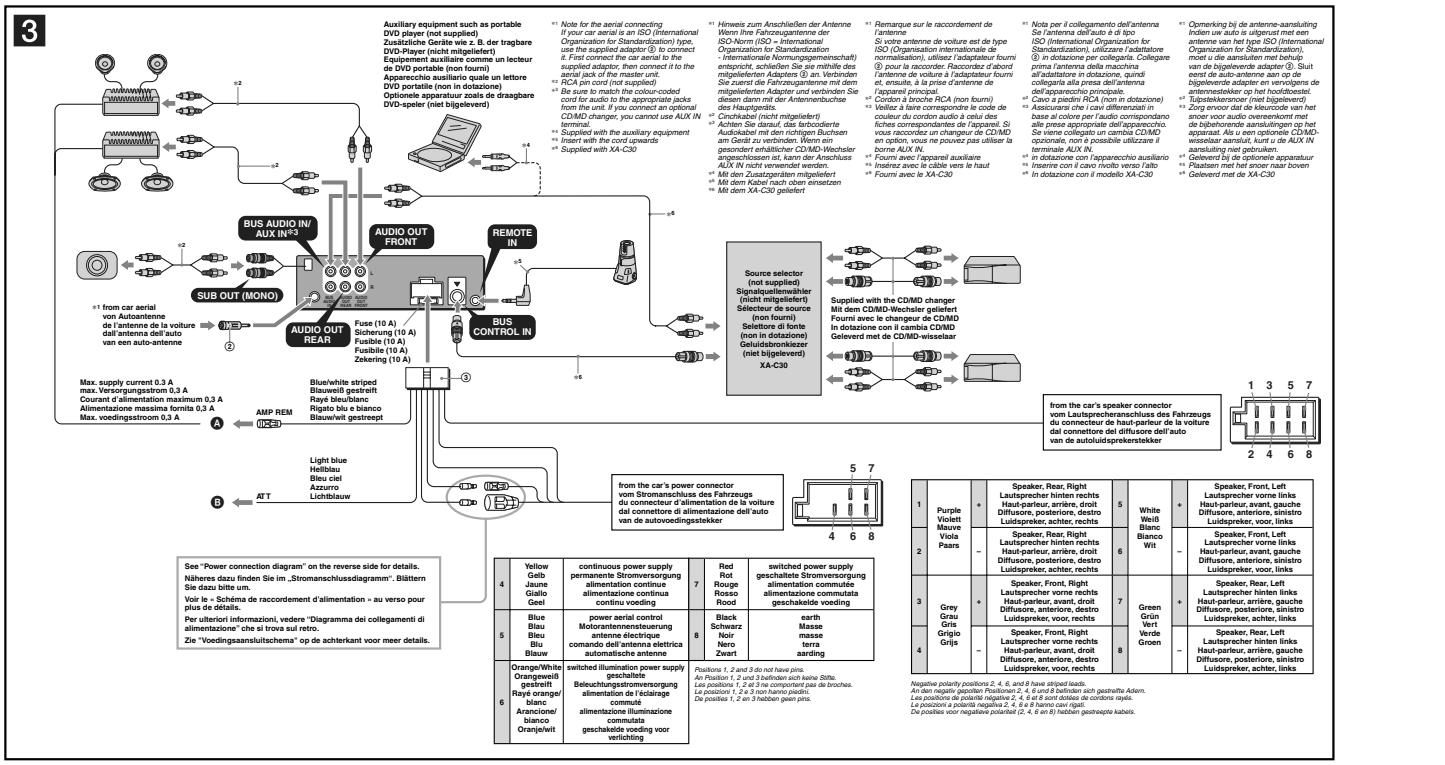

4	Yellow Gelb Jaune Giallo Geel	continuous power supply permanente Stromversorgung alimentation continue alimentazione continua continu voeding	7	Red Rot Rouge Rosso Rood	switched power supply geschaltete Stromversorgung alimentation commutée alimentazione commutata geschakelde voeding
5	Blue Blau Bleu Blu Blauw	power aerial control Motorantennensteuerung antenne électrique comando dell'antenna elettrica automatische antenne	8	Black Schwarz Noir Nero Zwart	earth Masse masse terra aarding
6	Orange/White Orangeweiß gestreift Rayé orange/ blanc Arancione/ bianco Oranje/wit	switched illumination power supply geschaltete Beleuchtungsstromversorgung alimentation de l'éclairage commuté alimentazione illuminazione commutata geschakelde voeding voor verlichting			

1	Purple Violett Mauve Viola Paars	+	Speaker, Rear, Right Lautsprecher hinten rechts Haut-parleur, arrière, droit Diffusore, posteriore, destro Luidspreker, achter, rechts	5	White Weiß Blanc Bianco Wit	+	Speaker, Front, Left Lautsprecher vorne links Haut-parleur, avant, gauche Diffusore, anteriore, sinistro Luidspreker, voor, links
2		–	Speaker, Rear, Right Lautsprecher hinten rechts Haut-parleur, arrière, droit Diffusore, posteriore, destro Luidspreker, achter, rechts	6		–	Speaker, Front, Left Lautsprecher vorne links Haut-parleur, avant, gauche Diffusore, anteriore, sinistro Luidspreker, voor, links
3	Grey Grau Gris Grigio Grijs	+	Speaker, Front, Right Lautsprecher vorne rechts Haut-parleur, avant, droit Diffusore, anteriore, destro Luidspreker, voor, rechts	7	Green Grün Vert Verde Groen	+	Speaker, Rear, Left Lautsprecher hinten links Haut-parleur, arrière, gauche Diffusore, posteriore, sinistro Luidspreker, achter, links
4		–	Speaker, Front, Right Lautsprecher vorne rechts Haut-parleur, avant, droit Diffusore, anteriore, destro Luidspreker, voor, rechts	8		–	Speaker, Rear, Left Lautsprecher hinten links Haut-parleur, arrière, gauche Diffusore, posteriore, sinistro Luidspreker, achter, links

Connection diagram 3

Ⓐ To AMP REMOTE IN of an optional power amplifier
This connection is only for amplifiers. Connecting any other system may damage the unit.

Ⓑ To the interface cable of a car telephone

Warning

If you have a power aerial without a relay box, connecting this unit with the supplied power connecting lead ③ may damage the aerial.

Notes on the control power and suppy leads
- *The power aerial control lead (blue) supplies +12 V DC when you turn on the tuner, or when you activate the AF (Alternative Frequency) or TA (Traffic Announcement) function.*
- *When your car has built-in FM/MW/LW aerial in the rear/side glass, connect the power aerial control lead (blue) or the accessory power input lead (red) to the power terminal of the existing aerial booster. For details, consult your dealer.*
- *A power aerial without a relay box cannot be used with this unit.*

Memory hold connection
When the yellow power input lead is connected, power will always be supplied to the memory circuit even when the ignition switch is turned off.

Notes on speaker connection
- *Before connecting the speakers, turn the unit off.*
- *Use speakers with an impedance of 4 to 8 ohms, and with adequate power handling capacities to avoid its damage.*
- *Do not connect the speaker terminals to the car chassis, or connect the terminals of the right speakers with those of the left speaker.*
- *Do not connect the earth lead of this unit to the negative (–) terminal of the speaker.*
- *Do not attempt to connect the speakers in parallel.*
- *Connect only passive speakers. Connecting active speakers (with built-in amplifiers) to the speaker terminals may damage the unit.*
- *To avoid a malfunction, do not use the built-in speaker leads installed in your car if the unit shares a common negative (–) lead for the right and left speakers.*
- *Do not connect the unit's speaker leads to each other.*

Note on connection
If speaker and amplifier are not connected correctly, "Failure" appears in the display. In this case, make sure the speaker and amplifier are connected correctly.

Anschlussdiagramm 3

Ⓐ An AMP REMOTE IN des gesondert erhältlichen Endverstärkers
Dieser Anschluss ist ausschließlich für Verstärker gedacht. Schließen Sie nichts anderes daran an. Andernfalls kann das Gerät beschädigt werden.

Ⓑ An Schnittstellenkabel eines Autotelefons

Warnung

Wenn Sie eine Motorantenne ohne Relaiskästchen verwenden, kann durch Anschließen dieses Geräts mit dem mitgelieferten Stromversorgungskabel ③ die Antenne beschädigt werden.

Hinweise zu den Steuer- und Stromversorgungsleitungen
- *Die Motorantennen-Steuerleitung (blau) liefert +12 V Gleichstrom, wenn Sie den Tuner einschalten oder die AF- (Alternativfrequenzsuche) oder die TA-Funktion (Verkehrsdurchsagen) aktivieren.*
- *Wenn das Fahrzeug mit einer in der Heck-/ Seitenfensterscheibe integrierten FM (UKW)/MW/LW-Antenne ausgestattet ist, schließen Sie die Motorantennen-Steuerleitung (blau) oder die Zubehörstromversorgungsleitung (rot) an den Stromversorgungsanschluss des vorhandenen Antennenverstärkers an. Näheres dazu erfahren Sie bei Ihrem Händler.*
- *Es kann nur eine Motorantenne mit Relaiskästchen angeschlossen werden.*

Stromversorgung des Speichers
Wenn die gelbe Stromversorgungsleitung angeschlossen ist, wird der Speicher stets (auch bei ausgeschalteter Zündung) mit Strom versorgt.

Hinweise zum Lautsprecheranschluss
- *Schalten Sie das Gerät aus, bevor Sie die Lautsprecher anschließen.*
- *Verwenden Sie Lautsprecher mit einer Impedanz zwischen 4 und 8 Ohm und ausreichender Belastbarkeit. Ansonsten können die Lautsprecher beschädigt werden.*
- *Verbinden Sie die Lautsprecheranschlüsse nicht mit dem Wagenchassis und verbinden Sie auch nicht die Anschlüsse des rechten mit denen des linken Lautsprechers.*
- *Verbinden Sie die Masseleitung dieses Geräts nicht mit dem negativen (–) Lautsprecheranschluss.*
- *Versuchen Sie nicht, Lautsprecher parallel anzuschließen.*
- *An die Lautsprecheranschlüsse dieses Geräts dürfen nur Passivlautsprecher angeschlossen werden. Schließen Sie keine Aktivlautsprecher (Lautsprecher mit eingebauten Verstärkern) an, da das Gerät sonst beschädigt werden könnte.*
- *Um Fehlfunktionen zu vermeiden, verwenden Sie nicht die im Fahrzeug installierten, integrierten Lautsprecherleitungen, wenn am Ende eine gemeinsame negative (–) Leitung für den rechten und den linken Lautsprecher verwendet wird.*
- *Verbinden Sie nicht die Lautsprecherkabel des Geräts miteinander.*

Hinweis zum Anschließen
Wenn Lautsprecher und Verstärker nicht richtig angeschlossen sind, erscheint „Failure" im Display. Vergewissern Sie sich in diesem Fall, dass Lautsprecher und Verstärker richtig angeschlossen sind.

Schémas de raccordement 3

Ⓐ Au niveau du AMP REMOTE IN d'un amplificateur de puissance facultatif
Ce raccordement existe seulement pour les amplificateurs. Le raccordement à tout autre système peut endommager l'appareil.

Ⓑ Vers le cordon de liaison d'un téléphone de voiture

Avertissement

Si vous disposez d'une antenne électrique sans boîtier de relais, le branchement de cet appareil au moyen du cordon d'alimentation fourni ③ risque d'endommager l'antenne.

Remarques sur les câbles de commande et d'alimentation
- *Le câble de commande (bleu) fournit du courant continu de +12 V lorsque vous mettez le tuner sous tension ou lorsque vous activez la fonction AF (fréquence alternative) ou TA (informations de circulation).*
- *Lorsque votre voiture est équipée d'une antenne FM/MW (GO)/LW (PO) intégrée dans la vitre arrière/latérale, raccordez le câble de commande d'antenne (bleu) ou l'entrée d'alimentation des accessoires (rouge) au bornier de l'amplificateur d'antenne existant. Pour plus de détails, consultez votre revendeur.*
- *Une antenne électrique sans boîtier de relais ne peut pas être utilisée avec cet appareil.*

Raccordement pour la conservation de la mémoire
Lorsque le câble de commande d'antenne jaune est connecté, le circuit de la mémoire est alimenté en permanence même si la clé de contact est en position d'arrêt.

Remarques sur le raccordement des haut-parleurs
- *Avant de raccorder les haut-parleurs, mettre l'appareil hors tension.*
- *Utiliser des haut-parleurs ayant une impédance de 4 à 8 ohms et une capacité adéquate sous peine de les endommager.*
- *Ne pas raccorder les bornes du système de haut-parleurs au châssis de la voiture et ne pas connecter les bornes du haut-parleur droit à celles du haut-parleur gauche.*
- *Ne pas raccorder le câble de mise à la masse de cet appareil à la borne négative (–) du haut-parleur.*
- *Ne pas tenter de raccorder les haut-parleurs en parallèle.*
- *Connecter uniquement des haut-parleurs passifs. La connexion de haut-parleurs actifs (avec des amplificateurs intégrés) aux bornes des haut-parleurs pourrait endommager l'appareil.*
- *Pour éviter tout problème de fonctionnement, n'utilisez pas les câbles des haut-parleurs intégrés installés dans votre voiture si l'appareil dispose d'un câble négatif commun (–) pour les haut-parleurs droit et gauche.*
- *Ne raccordez pas entre eux les cordons des haut-parleurs de l'appareil.*

Remarque sur le raccordement
Si les enceintes et l'amplificateur ne sont pas raccordés correctement, le message « Failure » s'affiche. Dans ce cas, assurez-vous que les enceintes et l'amplificateur sont raccordés correctement.

Schema di collegamento 3

Ⓐ A AMP REMOTE IN di un amplificatore di potenza opzionale
Questo collegamento è riservato esclusivamente agli amplificatori. Non collegare un tipo di sistema diverso onde evitare di causare danni all'apparecchio.

Ⓑ Al cavo di interfaccia di un telefono per auto

Avvertenza

Quando si collega l'apparecchio con il cavo di alimentazione in dotazione ③, si potrebbe danneggiare l'antenna elettrica se questa non dispone di scatola a relè.

Note sui cavi di controllo e di alimentazione
- *Il cavo (blu) di controllo dell'antenna elettrica fornisce alimentazione pari a +12 V CC quando si attiva il sintonizzatore oppure la funzione TA (notiziario sul traffico) o AF (frequenza alternativa).*
- *Se l'automobile è dotata di antenna FM/MW/LW incorporata nel vetro posteriore/laterale, collegare il cavo (blu) di controllo dell'antenna elettrica o il cavo (rosso) di ingresso dell'alimentazione accessoria al terminale di alimentazione del preamplificatore dell'antenna esistente. Per ulteriori informazioni, consultare il proprio fornitore.*
- *Non è possibile usare un'antenna elettrica senza scatola a relè con questo apparecchio.*

Collegamento per la conservazione della memoria
Quando il cavo di ingresso alimentazione giallo è collegato, viene sempre fornita alimentazione al circuito di memoria anche quando l'interruttore di accensione è spento.

Note sul collegamento dei diffusori
- *Prima di collegare i diffusori spegnere l'apparecchio.*
- *Usare diffusori di impedenza compresa tra 4 e 8 ohm e con capacità di potenza adeguata, altrimenti i diffusori potrebbero venire danneggiati.*
- *Non collegare i terminali del sistema diffusori al telaio dell'auto e non collegare i terminali del diffusore destro a quelli del diffusore sinistro.*
- *Non collegare il cavo di terra di questo apparecchio al terminale negativo (–) del diffusore.*
- *Non collegare i diffusori in parallelo.*
- *Assicurarsi di collegare soltanto diffusori passivi, poiché il collegamento di diffusori attivi, dotati di amplificatori incorporati, al terminali dei diffusori potrebbe danneggiare l'apparecchio.*
- *Per evitare problemi di funzionamento, non utilizzare i cavi dei diffusori incorporati installati nell'automobile se l'apparecchio condivide un cavo comune negativo (–) per i diffusori destro e sinistro.*
- *Non collegare fra loro i cavi dei diffusori dell'apparecchio.*

Nota sul collegamenti
Se l'amplificatore e il diffusore non sono collegati correttamente, "Failure" viene visualizzato nel display. In tal caso, accertarsi che l'amplificatore e il diffusore siano collegati correttamente.

Aansluitschema 3

Ⓐ Naar AMP REMOTE IN van een optionele eindversterker
Deze aansluiting is alleen bedoeld voor versterkers. Door een ander systeem aan te sluiten kan het apparaat worden beschadigd.

Ⓑ Naar het interfacesnoer van een autotelefoon

Waarschuwing

Indien u een elektrische antenne hebt zonder relaiskast, kan het aansluiten van deze eenheid met het bijgeleverde netsnoer ③ de antenne beschadigen.

Opmerkingen over de bedienings- en voedingskabels
- *De antennevoedingskabel (blauw) levert +12 V gelijkstroom wanneer u de tuner inschakelt of de AF (Alternative Frequency) of TA (Traffic Announcement) functie activeert.*
- *Wanneer uw auto is uitgerust met een FM/MW/LW-antenne in de achterruit/zijruit, moet u de antennevoedingskabel (blauw) of de hulpvoedingskabel (rood) aansluiten op de voedingsingang van de bestaande antenneversterker. Raadpleeg uw dealer voor meer details.*
- *Met dit apparaat is het niet mogelijk een automatische antenne zonder relaiskast te gebruiken.*

Instandhouden van het geheugen
Zolang de gele stroomdraad is aangesloten, blijft de stroomvoorziening van het geheugen intact, ook wanneer het contact van de auto wordt uitgeschakeld.

Opmerkingen betreffende het aansluiten van de luidsprekers
- *Zorg dat het apparaat is uitgeschakeld, alvorens de luidsprekers aan te sluiten.*
- *Gebruik luidsprekers met een impedantie van 4 tot 8 Ohm en let op dat die het vermogen van de versterker kunnen verwerken. Als dit wordt verzuimd, kunnen de luidsprekers ernstig beschadigd raken.*
- *Verbind in geen geval de aansluitingen van de luidsprekers met het chassis van de auto en sluit de aansluitingen van de rechter- en linkerluidspreker niet op elkaar aan.*
- *Verbind de aarddraad van dit apparaat niet met de negatieve (–) aansluiting van de luidspreker.*
- *Probeer nooit de luidsprekers parallel aan te sluiten.*
- *Sluit geen actieve luidsprekers (met ingebouwde versterkers) aan op de luidspreker-aansluiting van dit apparaat. Dit zal leiden tot beschadiging van de actieve luidsprekers. Sluit dus altijd uitsluitend luidsprekers zonder ingebouwde versterker aan.*
- *Om defecten te vermijden mag u de bestaande luidsprekerbedrading in uw auto niet gebruiken wanneer er een gemeenschappelijke negatieve (–) draad is voor de rechter- en linkerluidsprekers.*
- *Verbind de luidsprekerdraden niet met elkaar.*

Opmerking over aansluiten
Als de luidspreker en versterker niet correct zijn aangesloten, wordt "Failure" in het display weergegeven. In dit geval moet u zorgen dat de luidspreker en versterker correct zijn aangesloten.

• LOCATION OF CONTROLS
• CDX-GT700D (E Model)

Location of controls and basic operations

Main unit

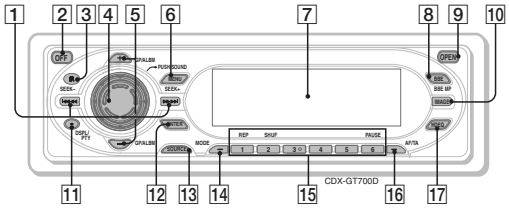

Front panel removed

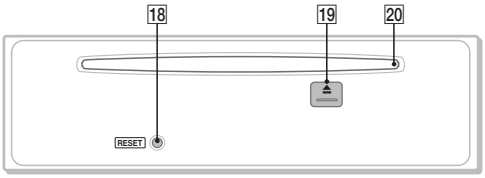

Card remote commander RM-X154

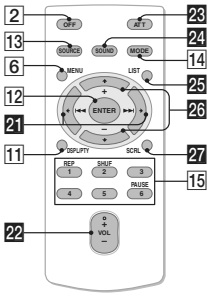

Refer to the pages listed for details. The corresponding buttons on the card remote commander control the same functions as those on the unit.

1 **SEEK –/+ buttons**
CD:
To skip tracks (press); skip tracks continuously (press, then press again within about 1 second and hold); fast-forward/reverse a track (press and hold).
Radio:
To tune in stations automatically (press); find a station manually (press and hold).

2 **OFF button**
To power off/stop the source.

3 **Receptor**
To receive signals from the card remote commander.

4 **VOL (volume) control dial/SOUND button** 16
To adjust volume (rotate); select sound items (press).

5 **GP*1/ALBM*2 +/– buttons*3**
To select preset stations/skip groups (press); skip groups continuously (press and hold).

6 **MENU button**
To enter menu.

7 **Display window**

8 **BBE MP button** 2, 12, 13
To activate the BBE MP function.

9 **OPEN button** 5

10 **IMAGE button** 2
To select the display image.
Movie mode 1-3 → Spectrum analyzer mode 1-5 → Space Producer mode → Wall paper mode 1-3 → normal play/reception mode

11 **DSPL (display)/PTY (Programme Type) button** 8, 10
To change display items; to select PTY in RDS.

12 **ENTER button**
To complete a setting.

13 **SOURCE button**
To power on/change the source (Radio/CD/MD*5/AUX).

14 **MODE button** 8, 17
To select the radio band (FM/MW/LW)/select the unit*4.

15 **Number buttons**
Radio:
To receive stored stations (press); store stations (press and hold).
CD/MD*5:
(1): **REP** 8, 18
(2): **SHUF** 8, 18
(6): **PAUSE***6
To pause playback. To cancel, press again.

16 **AF (Alternative Frequencies)/TA (Traffic Announcement) button** 10
To set AF and TA/TP in RDS.

17 **HDEQ button** 11, 12
To select an equalizer type (Flat, Xplod, Refined Vocal, Over Drive, Virtual Sub, Natural Cruise or Rear Drive)

18 **RESET button** 4

19 **⏏ (eject) button** 5
To eject the disc.

20 **Disc slot** 5
To insert the disc.

The following buttons on the card remote commander have also different buttons/functions from the unit.

21 **←/→ (SEEK –/+) buttons**
To control CD/Radio, the same as (SEEK –/+ on the unit.

22 **VOL (volume) +/– button**
To adjust volume.

23 **ATT (attenuate) button**
To attenuate the sound. To cancel, press again.

24 **SOUND button**
To select sound items.

25 **LIST button** 9, 18
To list up.

26 **↑/↓ (+/–) buttons**
To control CD, the same as (GP/ALBM) +/– on the unit.

27 **SCRL (scroll) button** 8
To scroll the display item.

*1 *When an ATRAC CD is played.*
*2 *When an MP3/WMA is played.*
*3 *If the changer is connected, the operation is different, see page 17.*
*4 *When a CD/MD changer is connected.*
*5 *When an MD changer is connected.*
*6 *When playing back on this unit.*

Note
If the unit is turned off and the display disappears, it cannot be operated with the card remote commander unless (SOURCE) on the unit is pressed, or a disc is inserted to activate the unit first.

Tip
For details on how to replace the battery, see "Replacing the lithium battery of the card remote commander" on page 21.

• CONNECTIONS
• CDX-GT700D (E Model)

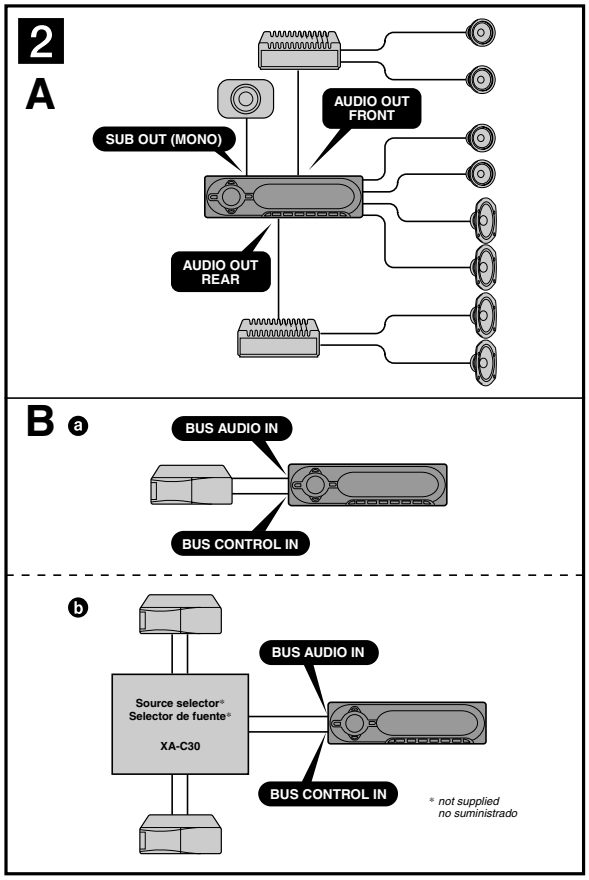

Connection example 2

Notes **(2-A)**
- *Be sure to connect the earth lead before connecting the amplifier.*
- *The alarm will only sound if the built-in amplifier is used.*

Tip **(2-B-ⓑ)**
For connecting two or more CD/MD changers, the source selector XA-C30 (not supplied) is necessary.

Ejemplo de conexiones 2

Notas **(2-A)**
- *Asegúrese de conectar primero el cable de conexión a masa antes de realizar la conexión del amplificador.*
- *La alarma sonará únicamente si se utiliza el amplificador incorporado.*

Sugerencia **(2-B-ⓑ)**
Si desea conectar dos o más cambiadores de CD/MD, necesitará el selector de fuente XA-C30 (no suminidtrado).

• CDX-GT700D (E Model)

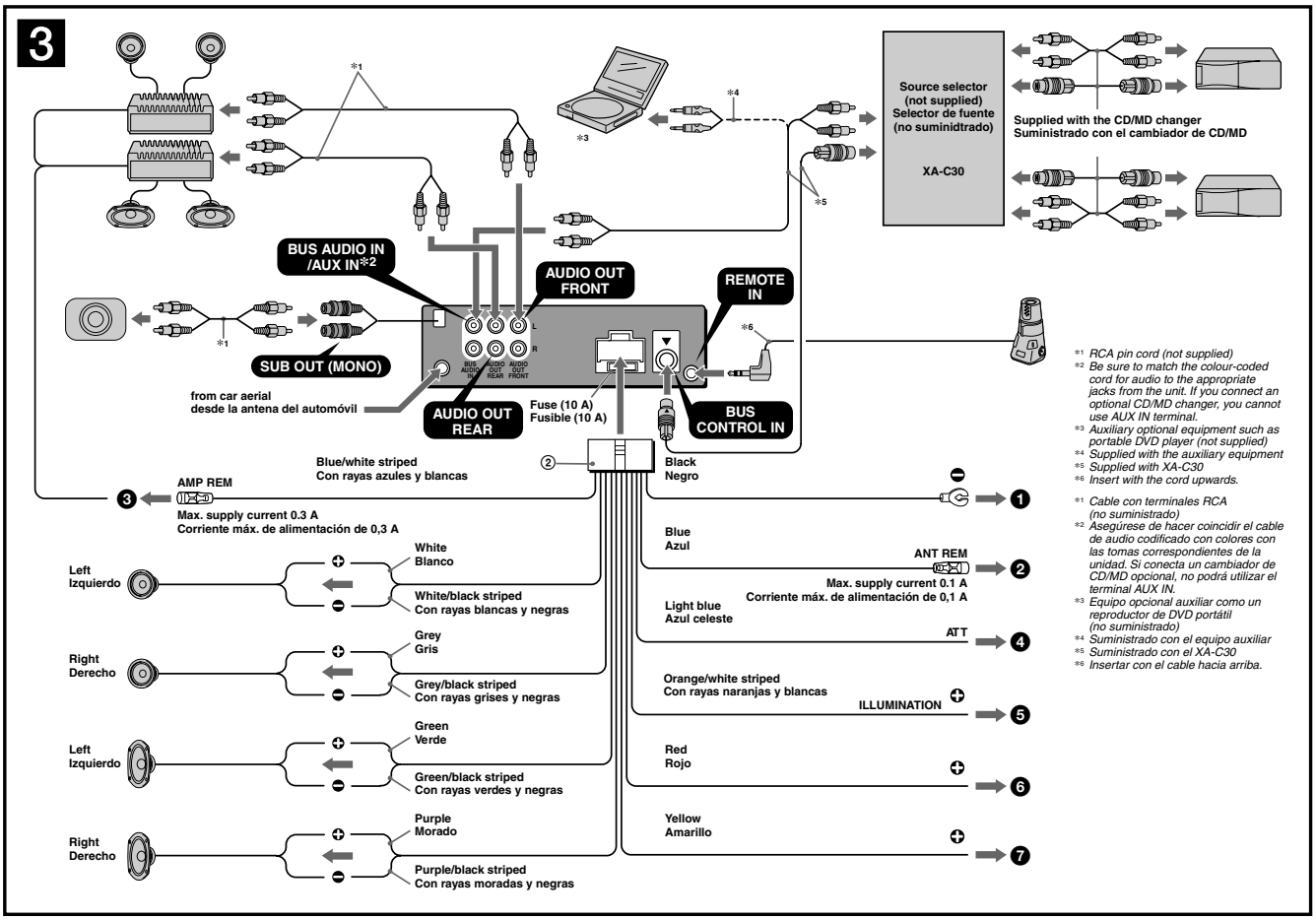

*1 RCA pin cord (not supplied)
*2 Be sure to match the colour-coded cord for audio to the appropriate jacks from the unit. If you connect an optional CD/MD changer, you cannot use AUX IN terminal.
*3 Auxiliary optional equipment such as portable DVD player (not supplied)
*4 Supplied with the auxiliary equipment
*5 Supplied with XA-C30
*6 Insert with the cord upwards.

*1 Cable con terminales RCA (no suministrado)
*2 Asegúrese de hacer coincidir el cable de audio codificado con colores con las tomas correspondientes de la unidad. Si conecta un cambiador de CD/MD opcional, no podrá utilizar el terminal AUX IN.
*3 Equipo opcional auxiliar como un reproductor de DVD portátil (no suministrado)
*4 Suministrado con el equipo auxiliar
*5 Suministrado con el XA-C30
*6 Insertar con el cable hacia arriba.

Connection diagram 3

❶ **To a metal surface of the car**
First connect the black earth lead, then connect the orange/white stripped, yellow, and red power input leads.

❷ **To the power aerial control lead or power supply lead of aerial booster amplifier**
Notes
- *It is not necessary to connect this lead if there is no power aerial or aerial booster, or with a manually-operated telescopic aerial.*
- *When your car has a built-in FM/MW/LW aerial in the rear/side glass, see "Notes on the control and power supply leads."*

❸ **To AMP REMOTE IN of an optional power amplifier**
This connection is only for amplifiers. Connecting any other system may damage the unit.

❹ **To the interface cable of a car telephone**

❺ **To a car's illumination signal**
Be sure to connect the black earth lead to a metal surface of the car first.

❻ **To the +12 V power terminal which is energized in the accessory position of the ignition key switch**
Notes
- *If there is no accessory position, connect to the +12 V power (battery) terminal which is energized at all times. Be sure to connect the black earth lead to a metal surface of the car first.*
- *When your car has a built-in FM/MW/LW aerial in the rear/side glass, see "Notes on the control and power supply leads."*

❼ **To the +12 V power terminal which is energized at all times**
Be sure to connect the black earth lead to a metal surface of the car first.

Notes on the control and power supply leads
- *The power aerial control lead (blue) supplies +12 V DC when you turn on the tuner.*
- *When your car has built-in FM/MW/LW aerial in the rear/side glass, connect the power aerial control lead (blue) or the accessory power input lead (red) to the power terminal of the existing aerial booster. For details, consult your dealer.*
- *A power aerial without a relay box cannot be used with this unit.*

Memory hold connection
When the yellow power input lead is connected, power will always be supplied to the memory circuit even when the ignition switch is turned off.

Notes on speaker connection
- *Before connecting the speakers, turn the unit off.*
- *Use speakers with an impedance of 4 to 8 ohms, and with adequate power handling capacities to avoid its damage.*
- *Do not connect the speaker terminals to the car chassis, or connect the terminals of the right speakers with those of the left speaker.*
- *Do not connect the earth lead of this unit to the negative (–) terminal of the speaker.*
- *Do not attempt to connect the speakers in parallel.*
- *Connect only passive speakers. Connecting active speakers (with built-in amplifiers) to the speaker terminals may damage the unit.*
- *To avoid a malfunction, do not use the built-in speaker leads installed in your car if the unit shares a common negative (–) lead for the right and left speakers.*
- *Do not connect the unit's speaker leads to each other.*

Note on connection
If speaker and amplifier are not connected correctly, "Failure" appears in the display. In this case, make sure the speaker and amplifier are connected correctly.

Diagrama de conexión 3

❶ **A una superficie metálica del automóvil**
Conecte primero el cable de conexión a masa negro, y después los cables con rayas naranjas y blancas, amarillo, y rojo de entrada de alimentación.

❷ **Al cable de control de la antena motorizada o al cable de fuente de alimentación del amplificador de señal de la antena**
Notas
- *Si no se dispone de antena motorizada ni de amplificador de antena, o se utiliza una antena telescópica accionada manualmente, no será necesario conectar este cable.*
- *Si el automóvil incorpora una antena de FM/MW/LW en el cristal trasero o lateral, consulte "Notas sobre los cables de control y de fuente de alimentación".*

❸ **A AMP REMOTE IN de un amplificador de potencia opcional**
Esta conexión es sólo para amplificadores. La conexión de cualquier otro sistema puede dañar la unidad.

❹ **Al cable de interfaz de un teléfono para automóvil**

❺ **A una señal de iluminación del automóvil**
Asegúrese de conectar primero el cable de conexión a masa negro a una superficie metálica del automóvil.

❻ **Al terminal de alimentación de +12 V que recibe energía en la posición de accesorio del interruptor de la llave de encendido**
Notas
- *Si no hay posición de accesorio, conéctelo al terminal de alimentación (batería) de +12 V que recibe energía sin interrupción.*
  Asegúrese de conectar primero el cable de conexión a masa negro a una superficie metálica del automóvil.
- *Si el automóvil incorpora una antena de FM/MW/LW en el cristal trasero o lateral, consulte "Notas sobre los cables de control y de fuente de alimentación".*

❼ **Al terminal de alimentación de +12 V que recibe energía sin interrupción**
Asegúrese de conectar primero el cable de conexión a masa negro a una superficie metálica del automóvil.

Notas sobre los cables de control y de fuente de alimentación
- *El cable de control de la antena motorizada (azul) suministrará cc de + 12 V cuando conecte la alimentación del sintonizador.*
- *Si el automóvil dispone de una antena de FM/MW/LW incorporada en el cristal trasero o lateral, conecte el cable de control de antena motorizada (azul) o el cable de entrada de alimentación auxiliar (rojo) al terminal de alimentación del amplificador de antena existente. Para obtener más información, consulte a su distribuidor.*
- *Con esta unidad no es posible utilizar una antena motorizada sin caja de relé.*

Conexión para protección de la memoria
Si conecta el cable de entrada de alimentación amarillo, el circuito de la memoria recibirá siempre alimentación, aunque apague el interruptor de encendido.

Notas sobre la conexión de los altavoces
- *Antes de conectar los altavoces, desconecte la alimentación de la unidad.*
- *Utilice altavoces con una impedancia de 4 a 8 Ω con la capacidad de potencia adecuada para evitar que se dañen.*
- *No conecte los terminales de altavoz al chasis del automóvil, ni conecte los terminales del altavoz derecho con los del izquierdo.*
- *No conecte el cable de conexión a masa de esta unidad al terminal negativo (–) del altavoz.*
- *No intente conectar los altavoces en paralelo.*
- *Conecte solamente altavoces pasivos. Si conecta altavoces activos (con amplificadores incorporados) a los terminales de altavoz, puede dañar la unidad.*
- *Para evitar fallas de funcionamiento, no utilice los cables de altavoz incorporados instalados en el automóvil si la unidad comparte un cable negativo común (–) para los altavoces derecho e izquierdo.*
- *No conecte los cables de altavoz de la unidad entre sí.*

Nota sobre la conexión
Si el altavoz y el amplificador no están conectados correctamente, aparecerá "Failure" en la pantalla. Si es así, compruebe la conexión de ambos dispositivos.

• LOCATION OF CONTROLS
• CDX-GT705DX

Location of controls and basic operations

Main unit

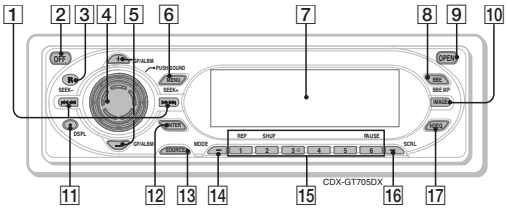

Front panel removed

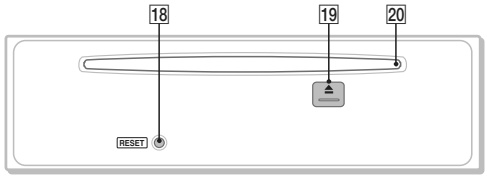

Card remote commander RM-X152

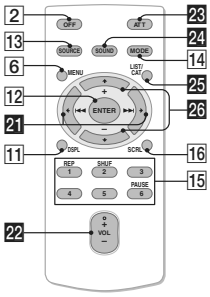

Refer to the pages listed for details. The corresponding buttons on the card remote commander control the same functions as those on the unit.

1 **SEEK –/+ buttons**
CD:
To skip tracks (press); skip tracks continuously (press, then press again within about 1 second and hold); fast-forward/reverse a track (press and hold).
Radio:
To tune in stations automatically (press); find a station manually (press and hold).

2 **OFF button**
To power off/stop the source.

3 **Receptor**
To receive signals from the card remote commander.

4 **VOL (volume) control dial/SOUND button** 14
To adjust volume (rotate); select sound items (press).

5 **GP*1/ALBM*2 +/– buttons*3**
To select preset stations/skip groups (press); skip groups continuously (press and hold).

6 **MENU button**
To enter menu.

7 **Display window**

8 **BBE MP button** 2, 10, 11
To activate the BBE MP function.

9 **OPEN button** 5

10 **IMAGE button** 2
To select the display image.
Movie mode 1-3 → Spectrum analyzer mode 1-5 → Space Producer mode → Wall paper mode 1-3 → normal play/reception mode

11 **DSPL (display) button** 8
To change display item.

12 **ENTER button**
To complete a setting.

13 **SOURCE button**
To power on/change the source (Radio/CD/MD*5/AUX/SAT*6).

14 **MODE button** 8, 15
To select the radio band (FM/AM)/select the unit*4.

15 **Number buttons**
Radio:
To receive stored stations (press); store stations (press and hold).
CD/MD*5:
(1): **REP** 8, 15
(2): **SHUF** 8, 15
(6): **PAUSE***7
To pause playback. To cancel, press again.

16 **SCRL (scroll) button** 8
To scroll the display item.

17 **HDEQ button** 9, 10
To select an equalizer type (Flat, Xplod, Refined Vocal, Over Drive, Virtual Sub, Natural Cruise or Rear Drive)

18 **RESET button** 4

19 **⏏ (eject) button** 5
To eject the disc.

20 **Disc slot** 5
To insert the disc.

The following buttons on the card remote commander have also different buttons/functions from the unit.

21 **←/→ (SEEK –/+) buttons**
To control CD/Radio, the same as (SEEK –/+ on the unit.

22 **VOL (volume) +/– button**
To adjust volume.

23 **ATT (attenuate) button**
To attenuate the sound. To cancel, press again.

24 **SOUND button**
To select sound items.

25 **LIST/CAT*6 button** 9, 16
To list up.

26 **↑/↓ (+/–) buttons**
To control CD, the same as (GP/ALBM) +/– on the unit.

*1 *When an ATRAC CD is played.*
*2 *When an MP3/WMA is played.*
*3 *If the changer is connected, the operation is different, see page 15.*
*4 *When a CD/MD changer is connected.*
*5 *When an MD changer is connected.*
*6 *When the SAT tuner is connected.*
*7 *When playing back on this unit.*

Note
If the unit is turned off and the display disappears, it cannot be operated with the card remote commander unless (SOURCE) on the unit is pressed, or a disc is inserted to activate the unit first.

Tip
For details on how to replace the battery, see "Replacing the lithium battery of the card remote commander" on page 19.

• CONNECTIONS
• CDX-GT705DX

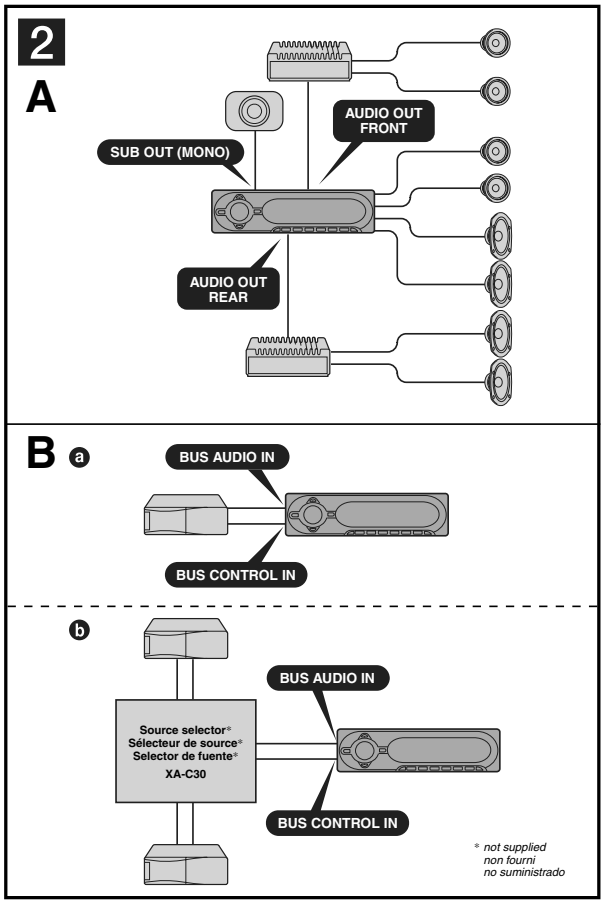

Connection example 2

***Notes* (2-A)**
- *Be sure to connect the ground lead before connecting the amplifier.*
- *The alarm will only sound if the built-in amplifier is used.*

***Tip* (2-B-b)**
For connecting two or more CD/MD changers, the source selector XA-C30 (not supplied) is necessary.

Exemple de raccordement 2

***Remarques* (2-A)**
- *Raccordez d'abord le câble de mise à la masse avant de raccorder l'amplificateur.*
- *L'alarme est émise uniquement lorsque l'amplificateur intégré est utilisé.*

***Conseil* (2-B-b)**
Dans le cas du raccordement de deux changeurs de CD/MD ou plus, le sélecteur de source XA-C30 (non fourni) est requis.

Ejemplo de conexiones 2

***Notas* (2-A)**
- *Asegúrese de conectar primero el cable de conexión a masa antes de realizar la conexión del amplificador.*
- *La alarma sonará únicamente si se utiliza el amplificador incorporado.*

***Sugerencia* (2-B-b)**
Si desea conectar dos o más cambiadores de CD/MD, necesitará el selector de fuente XA-C30 (no suministrado).

• CDX-GT705DX

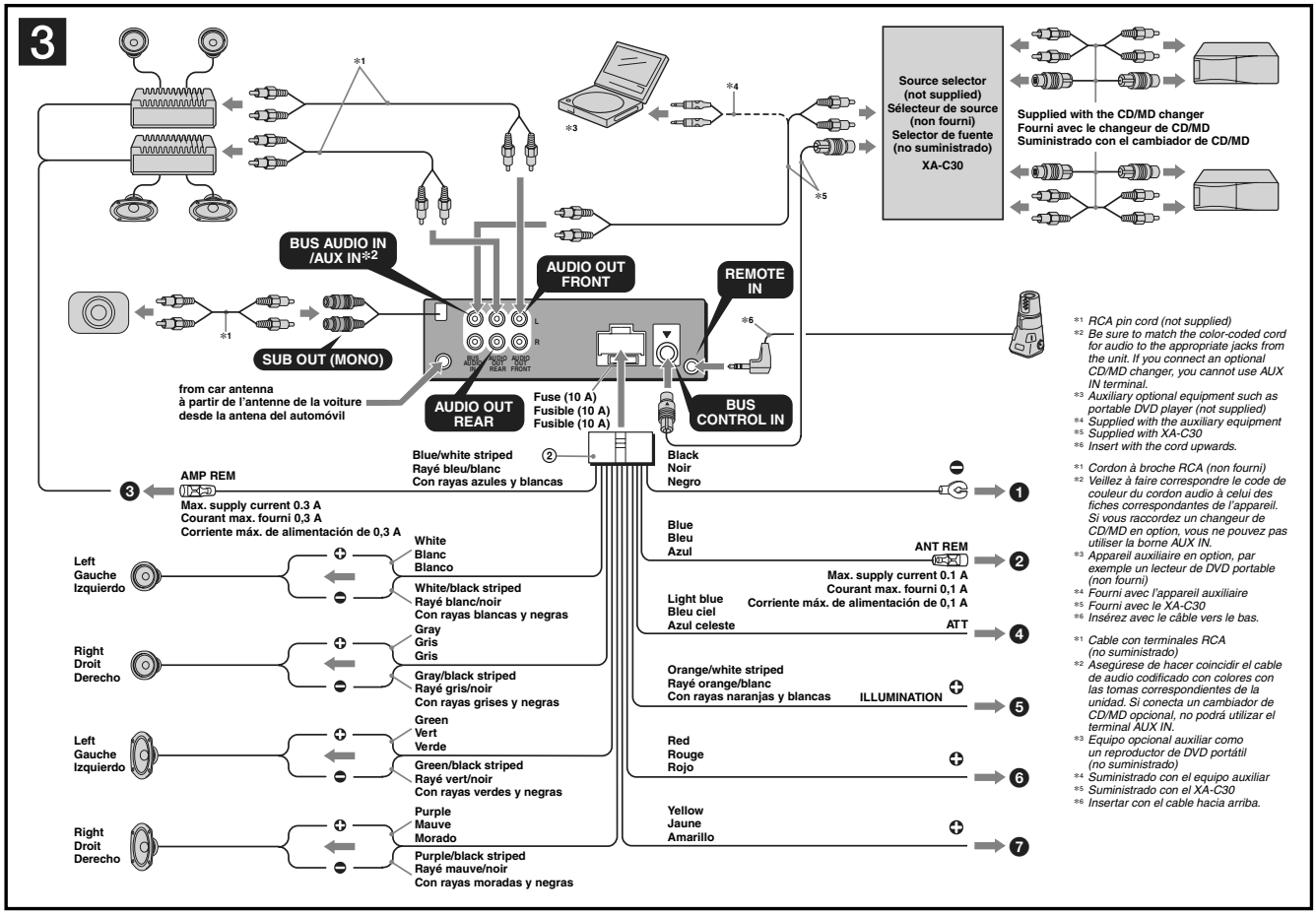

Connection diagram 3

❶ To a metal surface of the car
First connect the black ground lead, then connect the orange/white striped, yellow, and red power input leads.

❷ To the power antenna control lead or power supply lead of antenna booster amplifier
Notes
- *It is not necessary to connect this lead if there is no power antenna or antenna booster, or with a manually-operated telescopic antenna.*
- *When your car has a built-in FM/AM antenna in the rear/side glass, see "Notes on the control and power supply leads."*

❸ To AMP REMOTE IN of an optional power amplifier
This connection is only for amplifiers. Connecting any other system may damage the unit.

❹ To the interface cable of a car telephone

❺ To a car's illumination signal
Be sure to connect the black ground lead to a metal surface of the car first.

❻ To the +12 V power terminal which is energized in the accessory position of the ignition key switch
Notes
- *If there is no accessory position, connect to the +12 V power (battery) terminal which is energized at all times. Be sure to connect the black ground lead to a metal surface of the car first.*
- *When your car has a built-in FM/AM antenna in the rear/side glass, see "Notes on the control and power supply leads."*

❼ To the +12 V power terminal which is energized at all times
Be sure to connect the black ground lead to a metal surface of the car first.

Notes on the control and power supply leads
- *The power antenna control lead (blue) supplies +12 V DC when you turn on the tuner.*
- *When your car has built-in FM/AM antenna in the rear/side glass, connect the power antenna control lead (blue) or the accessory power input lead (red) to the power terminal of the existing antenna booster. For details, consult your dealer.*
- *A power antenna without a relay box cannot be used with this unit.*

Memory hold connection
When the yellow power input lead is connected, power will always be supplied to the memory circuit even when the ignition switch is turned off.

Notes on speaker connection
- *Before connecting the speakers, turn the unit off.*
- *Use speakers with an impedance of 4 to 8 ohms, and with adequate power handling capacities to avoid its damage.*
- *Do not connect the speaker terminals to the car chassis, or connect the terminals of the right speakers with those of the left speaker.*
- *Do not connect the ground lead of this unit to the negative (–) terminal of the speaker.*
- *Do not attempt to connect the speakers in parallel.*
- *Connect only passive speakers. Connecting active speakers (with built-in amplifiers) to the speaker terminals may damage the unit.*
- *To avoid a malfunction, do not use the built-in speaker leads installed in your car if the unit shares a common negative (–) lead for the right and left speakers.*
- *Do not connect the unit's speaker leads to each other.*

Note on connection
If speaker and amplifier are not connected correctly, "Failure" appears in the display. In this case, make sure the speaker and amplifier are connected correctly.

Schéma de raccordement 3

❶ À un point métallique de la voiture
Branchez d'abord le fil de masse noir et, ensuite, les fils d'entrée d'alimentation rayé orange/blanc, jaune, et rouge.

❷ Vers le câble de commande d'antenne électrique ou le câble d'alimentation de l'amplificateur d'antenne
Remarques
- *Il n'est pas nécessaire de raccorder ce câble s'il n'y a pas d'antenne électrique ni d'amplificateur d'antenne, ou avec une antenne télescopique manuelle.*
- *Si votre voiture est équipée d'une antenne FM/AM intégrée dans la vitre arrière/latérale, voir « Remarques sur les câbles de commande et d'alimentation ».*

❸ Au niveau de AMP REMOTE IN de l'amplificateur de puissance en option
Ce raccordement s'applique uniquement aux amplificateurs. Le branchement de tout autre système risque d'endommager l'appareil.

❹ Vers le cordon de liaison d'un téléphone de voiture

❺ Vers le connecteur du signal d'éclairage de la voiture
Raccordez d'abord le câble de mise à la masse noir à un point métallique du véhicule.

❻ À la borne +12 V qui est alimentée quand la clé de contact est sur la position accessoires
Remarques
- *S'il n'y a pas de position accessoires, raccordez la borne d'alimentation (batterie) +12 V qui est alimentée en permanence. Raccordez d'abord le câble de mise à la masse noir à un point métallique du véhicule.*
- *Si votre voiture est équipée d'une antenne FM/AM intégrée dans la vitre arrière/latérale, voir « Remarques sur les câbles de commande et d'alimentation ».*

❼ À la borne +12 V qui est alimentée en permanence
Raccordez d'abord le câble de mise à la masse noir à un point métallique du véhicule.

Remarques sur les câbles de commande et d'alimentation
- *Le câble de commande d'antenne électrique (bleu) fournit une alimentation de + 12 V CC lorsque vous mettez la radio sous tension.*
- *Lorsque votre voiture est équipée d'une antenne FM/AM intégrée dans la vitre arrière/latérale, raccordez le câble de commande d'antenne électrique (bleu) ou l'entrée d'alimentation des accessoires (rouge) à la borne d'alimentation de l'amplificateur d'antenne existant. Pour plus de détails, consultez votre détaillant.*
- *Une antenne électrique sans boîtier de relais ne peut pas être utilisée avec cet appareil.*

Raccordement pour la conservation de la mémoire
Lorsque le câble d'entrée d'alimentation jaune est raccordé, le circuit de la mémoire est alimenté en permanence même si la clé de contact est sur la position d'arrêt.

Remarques sur le raccordement des haut-parleurs
- *Avant de raccorder les haut-parleurs, mettez l'appareil hors tension.*
- *Utilisez des haut-parleurs ayant une impédance de 4 à 8 ohms avec une capacité électrique adéquate pour éviter de les endommager.*
- *Ne raccordez pas les bornes du système de haut-parleurs au châssis de la voiture et ne raccordez pas les bornes des haut-parleurs droit à celles du haut-parleur gauche.*
- *Ne raccordez pas le câble de mise à la masse de cet appareil à la borne négative (–) du haut-parleur.*
- *N'essayez pas de raccorder les haut-parleurs en parallèle.*
- *Raccordez uniquement des haut-parleurs passifs. Le raccordement de haut-parleurs actifs (avec amplificateurs intégrés) aux bornes des haut-parleurs peut endommager l'appareil.*
- *Pour éviter tout dysfonctionnement, n'utilisez pas les câbles des haut-parleurs intégrés installés dans votre voiture si l'appareil partage un câble négatif commun (–) pour les haut-parleurs droit et gauche.*
- *Ne raccordez pas entre eux les cordons des haut-parleurs de l'appareil.*

Remarque sur le raccordement
Si les haut-parleurs et l'amplificateur ne sont pas raccordés correctement, le message « Failure » s'affiche. Dans ce cas, assurez-vous que les haut-parleurs et l'amplificateur sont bien raccordés.

Diagrama de conexión 3

❶ A una superficie metálica del automóvil
Conecte primero el cable de puesta a masa negro, y después los cables con rayas naranjas y blancas, amarillo, y rojo de entrada de alimentación.

❷ Al cable de control de la antena motorizada o al cable de fuente de alimentación del amplificador de señal de la antena
Notas
- *Si no se dispone de antena motorizada ni de amplificador de antena, o se utiliza una antena telescópica accionada manualmente, no será necesario conectar este cable.*
- *Si el automóvil incorpora una antena de FM/AM en el cristal trasero o lateral, consulte "Notas sobre los cables de control y de fuente de alimentación".*

❸ A AMP REMOTE IN de un amplificador de potencia opcional
Esta conexión es sólo para amplificadores. La conexión de cualquier otro sistema puede dañar la unidad.

❹ Al cable de interfaz de un teléfono para automóvil

❺ A una señal de iluminación del automóvil
Asegúrese de conectar primero el cable de conexión a masa negro a una superficie metálica del automóvil.

❻ Al terminal de alimentación de +12 V que recibe energía en la posición de accesorio del interruptor de la llave de encendido
Notas
- *Si no hay posición de accesorio, conéctelo al terminal de alimentación (batería) de +12 V que recibe energía sin interrupción.*
  Asegúrese de conectar primero el cable de conexión a masa negro a una superficie metálica del automóvil.
- *Si el automóvil incorpora una antena de FM/AM en el cristal trasero o lateral, consulte "Notas sobre los cables de control y de fuente de alimentación".*

❼ Al terminal de alimentación de +12 V que recibe energía sin interrupción
Asegúrese de conectar primero el cable de conexión a masa negro a una superficie metálica del automóvil.

Notas sobre los cables de control y de fuente de alimentación
- *El cable de control de la antena motorizada (azul) suministrará cc de + 12 V cuando conecte la alimentación del sintonizador.*
- *Si el automóvil dispone de una antena de FM/AM incorporada en el cristal trasero o lateral, conecte el cable de control de antena motorizada (azul) o el cable de entrada de alimentación auxiliar (rojo) al terminal de alimentación del amplificador de antena existente. Para obtener más información, consulte a su distribuidor.*
- *Con esta unidad no es posible utilizar una antena motorizada sin caja de relé.*

Conexión para protección de la memoria
Si conecta el cable de entrada de alimentación amarillo, el circuito de la memoria recibirá siempre alimentación, aunque apague la llave de encendido.

Notas sobre la conexión de los altavoces
- *Antes de conectar los altavoces, desconecte la alimentación de la unidad.*
- *Utilice altavoces con una impedancia de 4 a 8 Ω con la capacidad de potencia adecuada para evitar que se dañen.*
- *No conecte los terminales de altavoz al chasis del automóvil, ni conecte los terminales del altavoz derecho con los del izquierdo.*
- *No conecte el cable de conexión a masa de esta unidad al terminal negativo (–) del altavoz.*
- *No intente conectar los altavoces en paralelo.*
- *Conecte solamente altavoces pasivos. Si conecta altavoces activos (con amplificadores incorporados) a los terminales de altavoz, puede dañar la unidad.*
- *Para evitar fallos de funcionamiento, no utilice los cables de altavoz incorporados instalados en el automóvil si su unidad comparte un cable negativo común (–) para los altavoces derecho e izquierdo.*
- *No conecte los cables de altavoz de la unidad entre sí.*

Nota sobre la conexión
Si el altavoz y el amplificador no están conectados correctamente, aparecerá "Failure" en la pantalla. Si es así, compruebe la conexión de ambos dispositivos.

SECTION 2
DISASSEMBLY

Note: This set can be disassemble according to the following sequence.

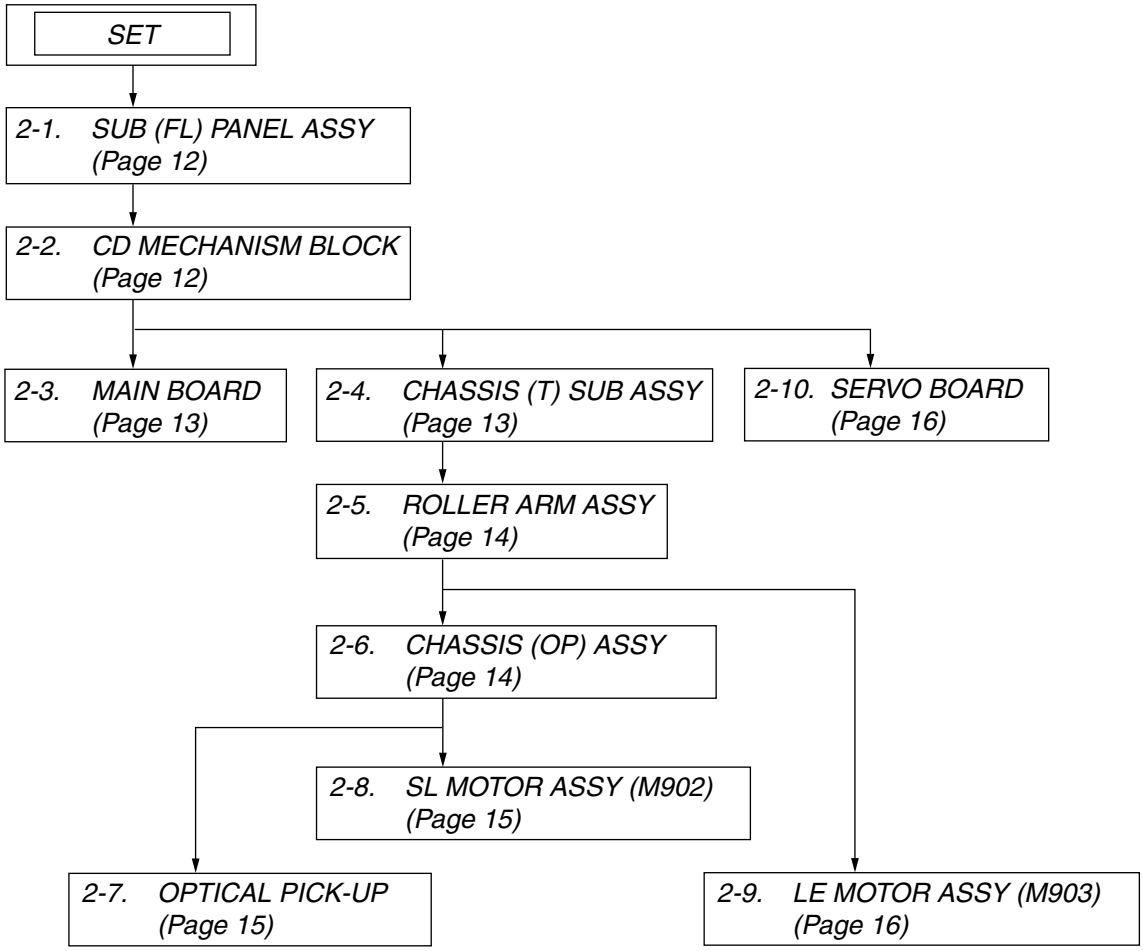

Note: Follow the disassembly procedure in the numerical order given.

2-1. SUB (FL) PANEL ASSY

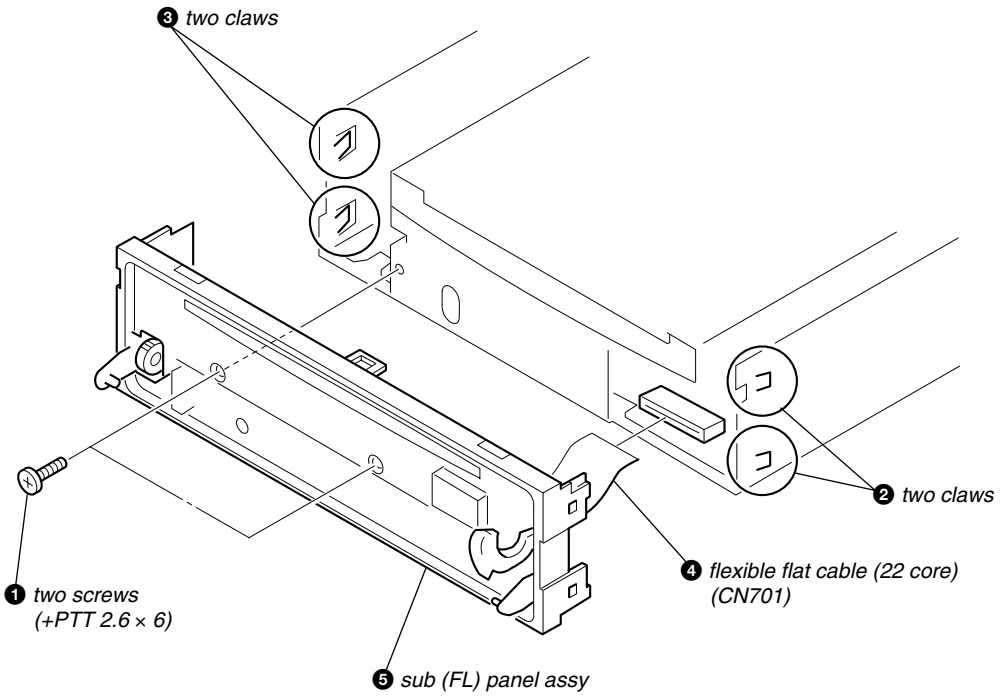

2-2. CD MECHANISM BLOCK

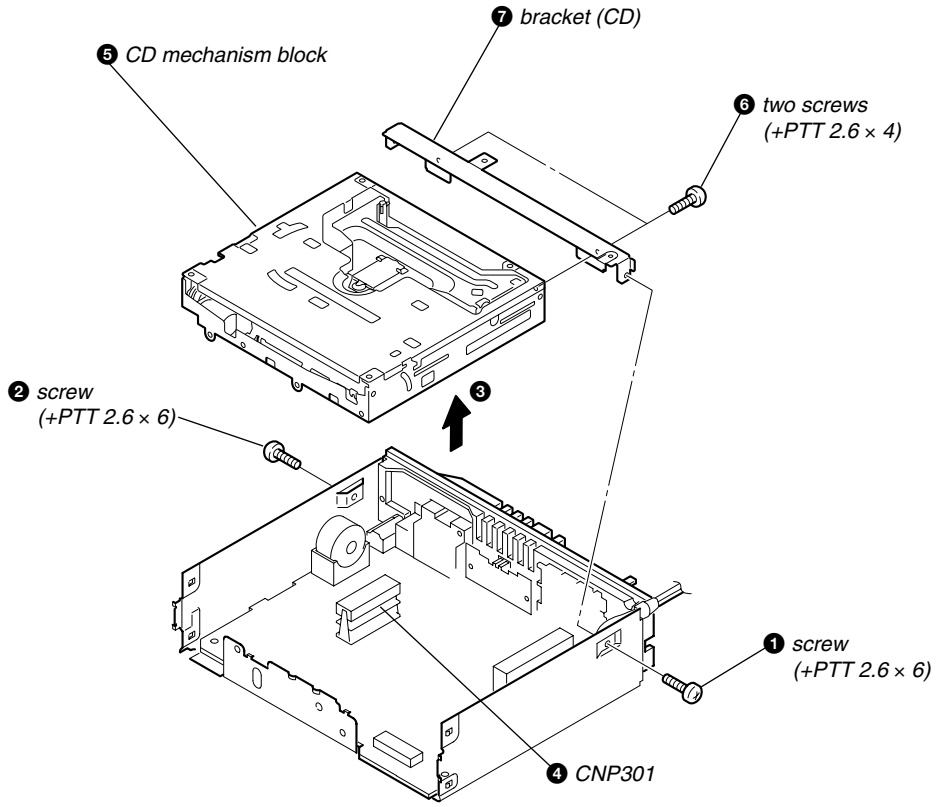

2-3. MAIN BOARD

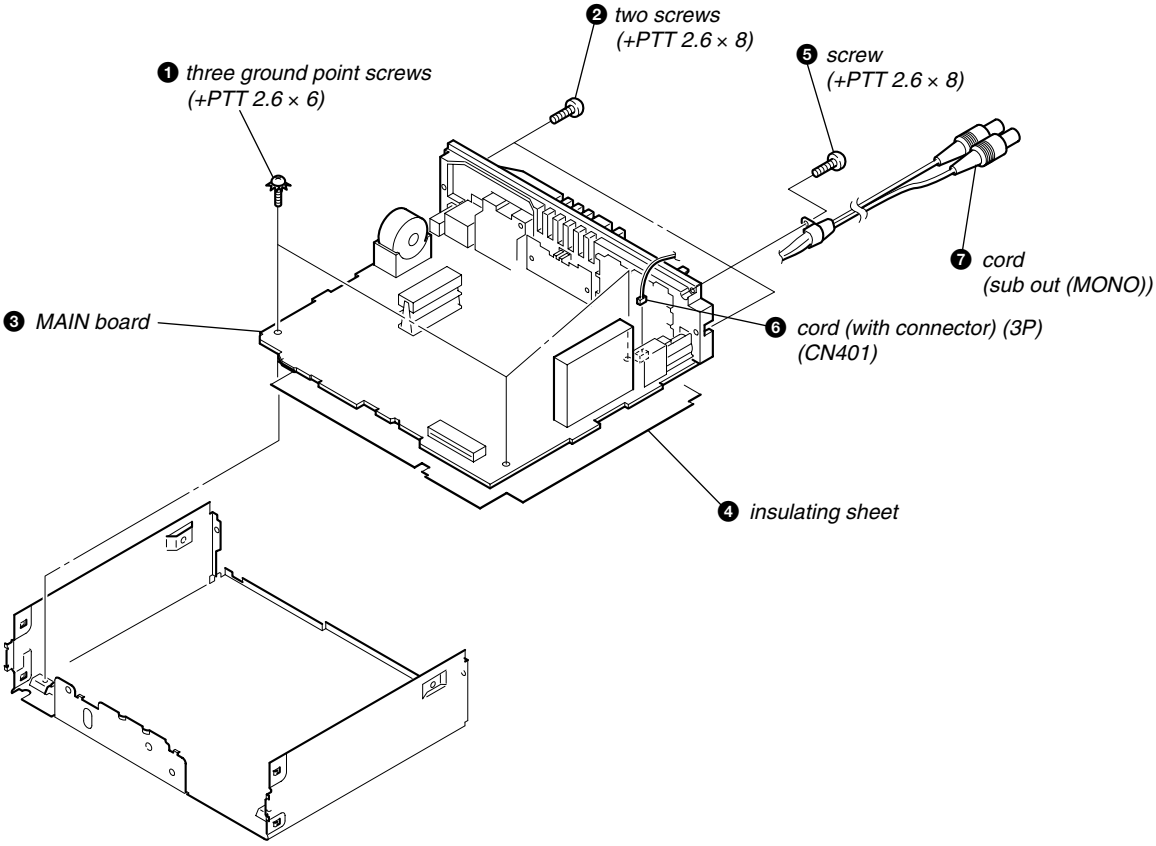

2-4. CHASSIS (T) SUB ASSY

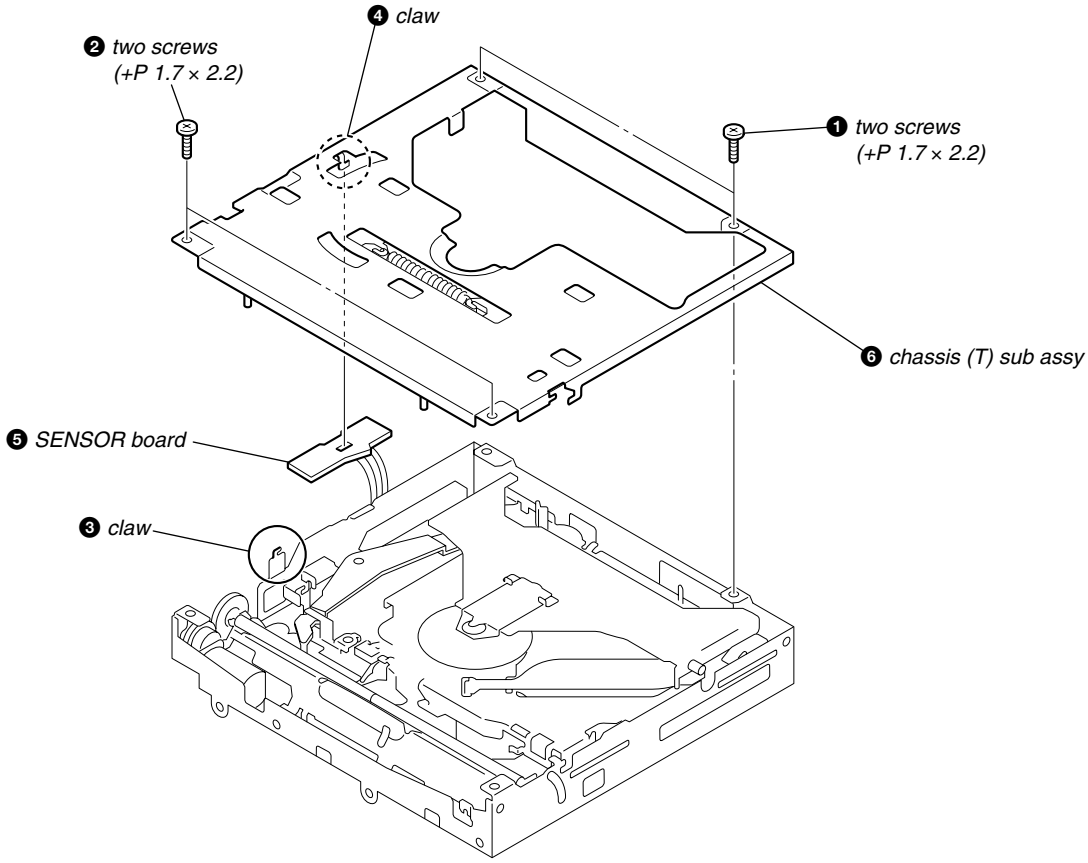

2-5. ROLLER ARM ASSY

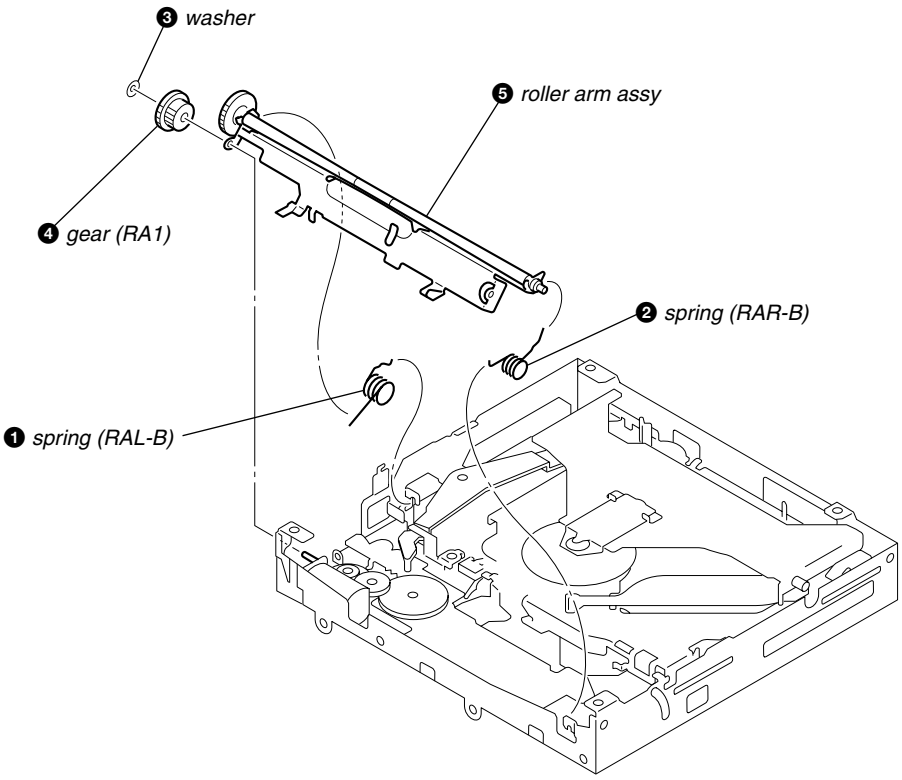

2-6. CHASSIS (OP) ASSSY

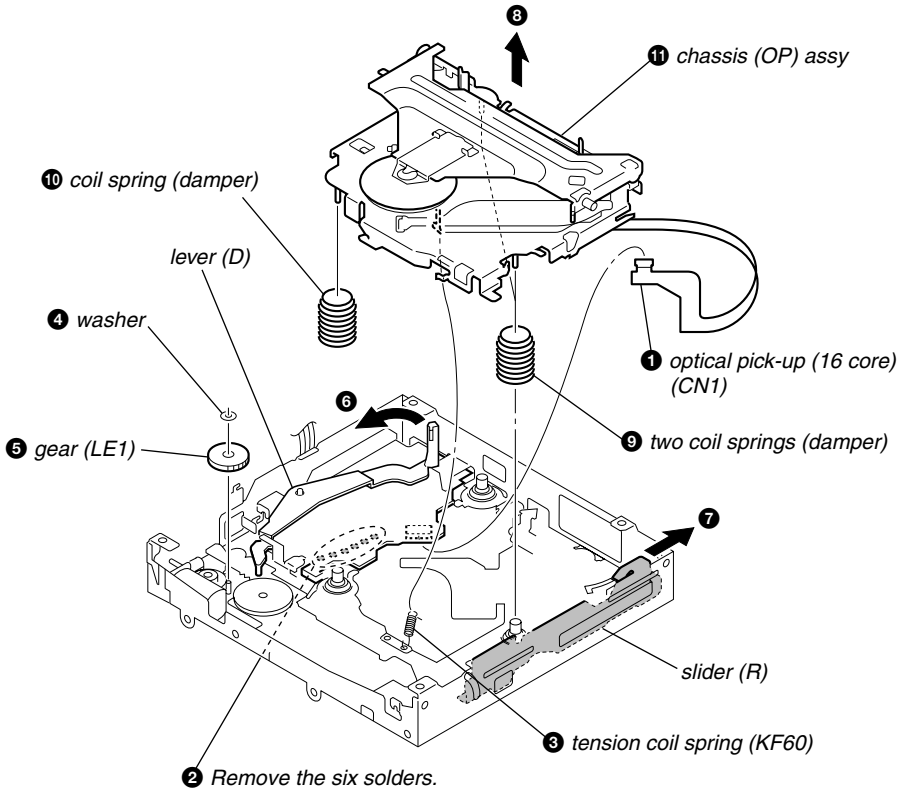

2-7. OPTICAL PICK-UP

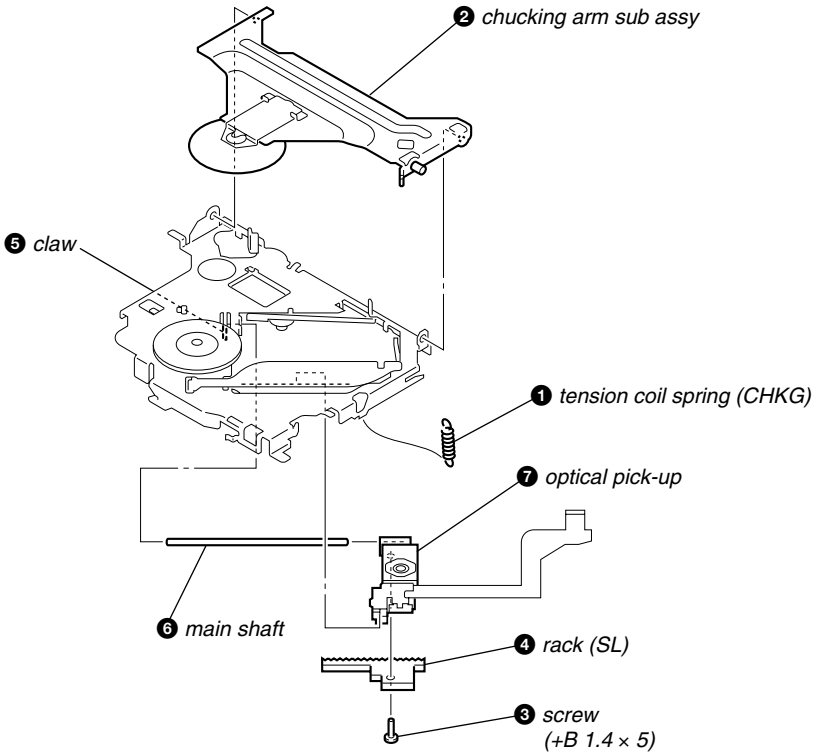

2-8. SL MOTOR ASSY (M902)

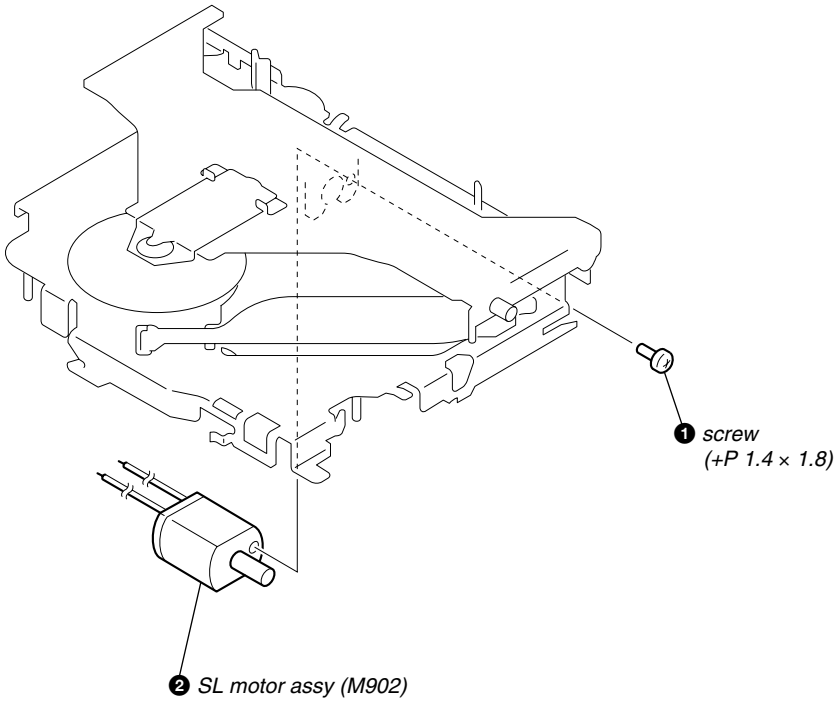

2-9. LE MOTOR ASSY (M903)

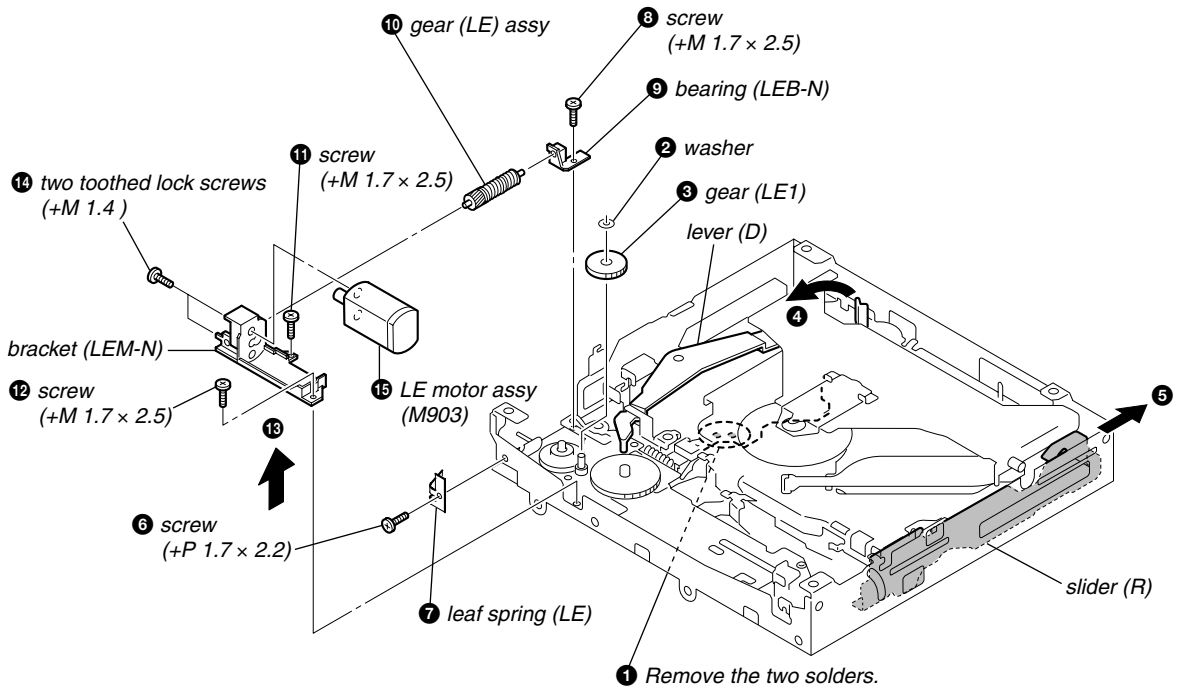

2-10. SERVO BOARD

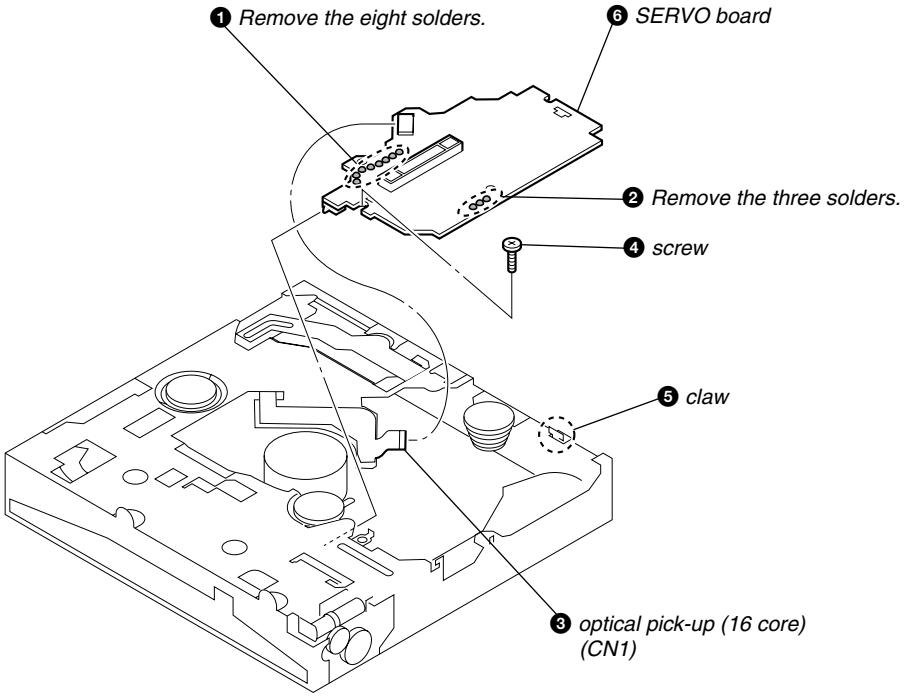

SECTION 3
DIAGNOSIS FUNCTION

Description of the Diagnostics function:

1. Setting the Diag display mode

With the power off, press the 4 button, 5 button, and 4 button on the set body or the remote control (for more than 2 seconds) in turn.

2. Canceling the Diag display mode

During the Diag function mode, press the OFF button.

3. Initial display in the Diag display mode.

Just when the Diag mode is entered, "reset count" is displayed. This display mode is switched by each pressing of GP/ALBM + or GP/ALBM – button.

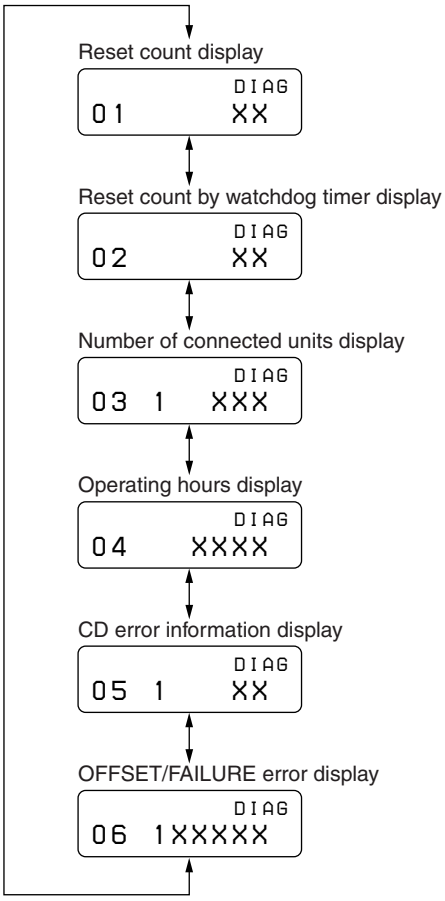

4. Contents of each display mode

4-1. Reset count display mode

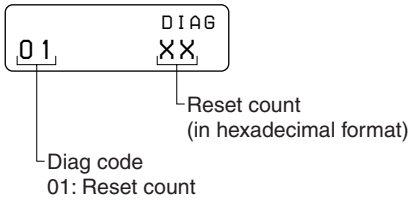

4-2. Reset count by watchdog timer display mode

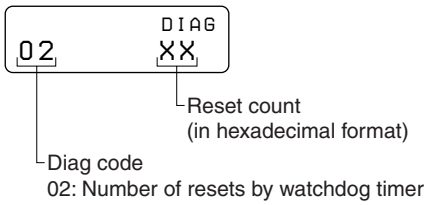

4-3. Number of connected units display mode

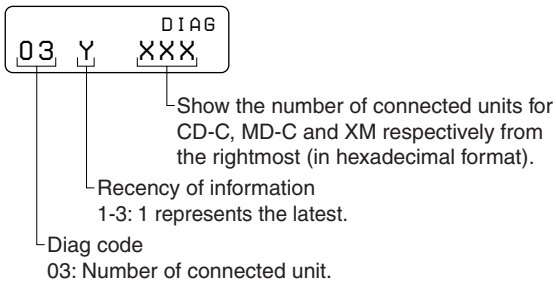

This display mode is switched by each pressing of ⏮ ◀◀/SEEK – or ▶▶ ⏭/SEEK + button during the number of connected units display mode.

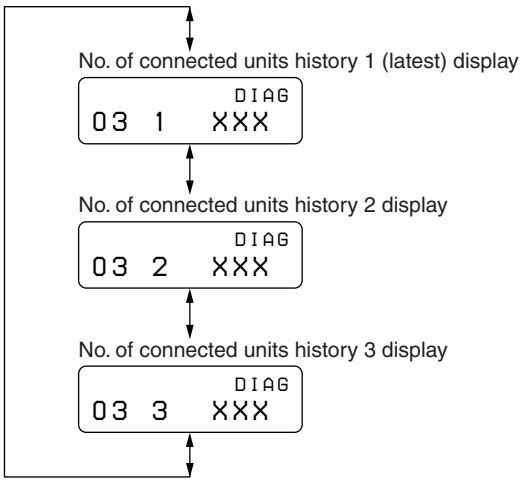

4-4. Operating hours display mode

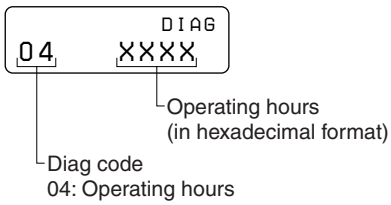

4-5. CD error information display mode
4-5-1. Error description

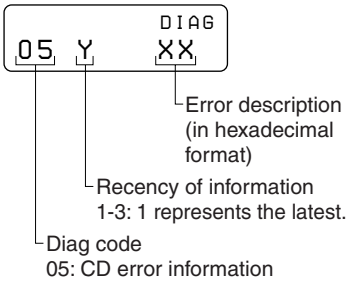

Error information

Indication	Description
1X	SERVO ERROR
3X	LOADING ERROR
4X	TRACK JUMP
5X	TEXT ERROR
FX	MECHA ERROR

4-5-2. Disc type and operating hours

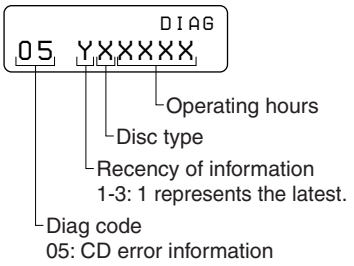

Disc type

Indication	Disc type
0	MP3
1	WMA
2	AAC
3	ATRAC
8	CD/DA
F	UNKNOWN

This display mode is switched by each pressing of [⏮ ◀◀/SEEK –] or [▶▶ ▶▶⏭/SEEK +] button during the CD error information display mode.

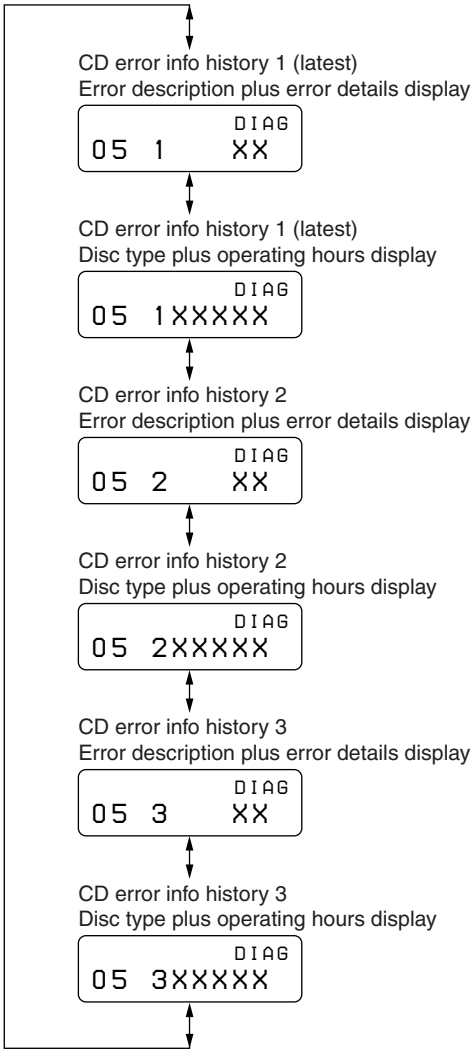

4-6. OFFSET/FAILURE error display mode

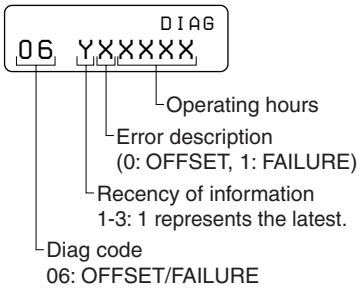

This display mode is switched by each pressing of [⏮ ◀◀/SEEK –] or [▶▶ ▶▶⏭/SEEK +] button during the OFFSET/FAILURE error display mode.

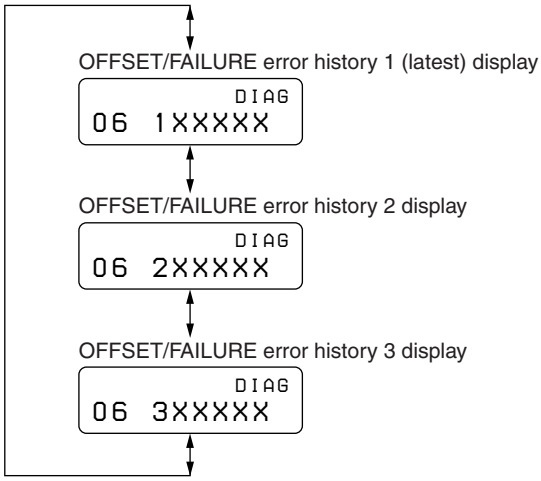

SECTION 4
DIAGRAMS

4-1. BLOCK DIAGRAM — CD SECTION —

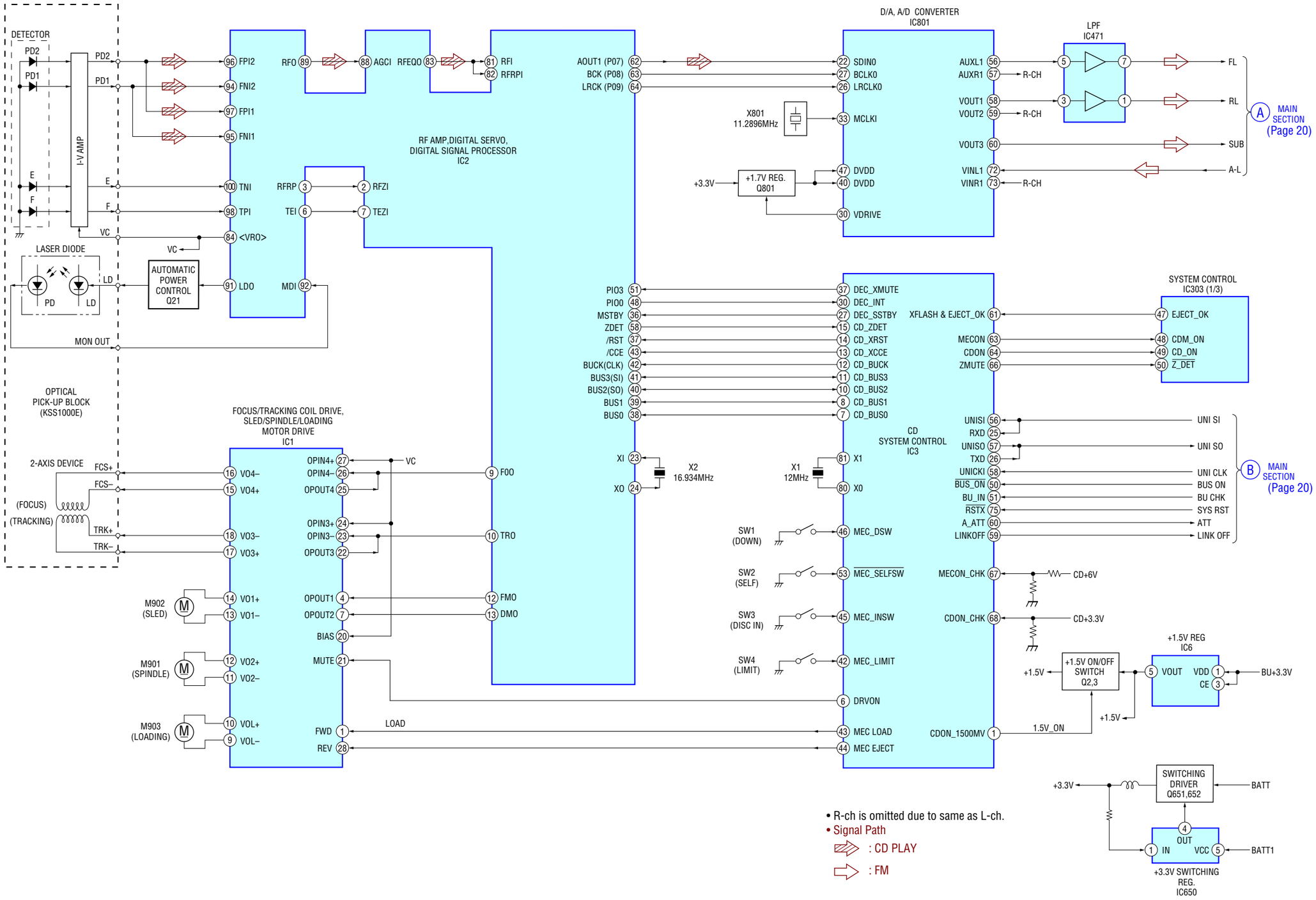

4-2. BLOCK DIAGRAM — MAIN SECTION —

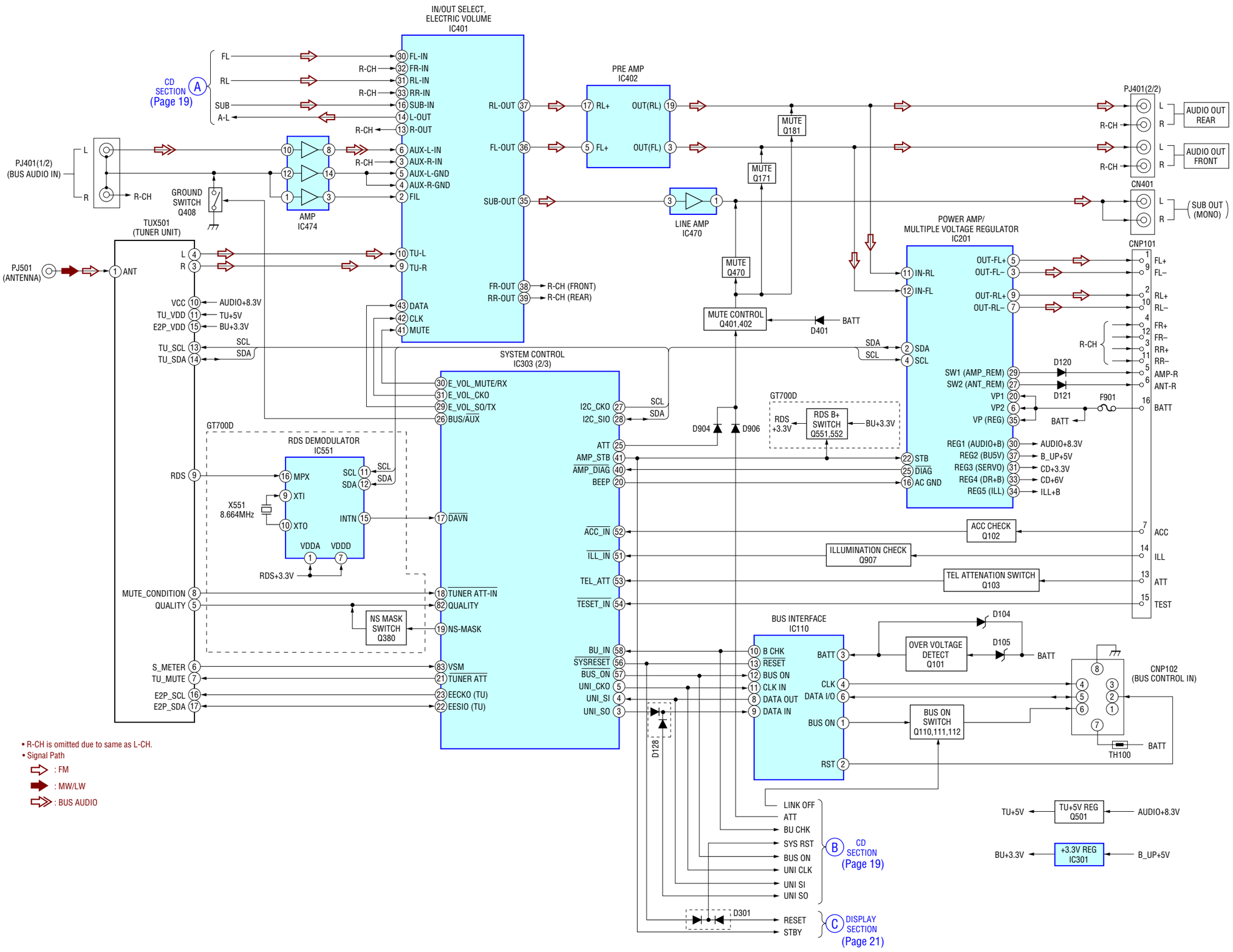

4-3. BLOCK DIAGRAM — DISPLAY SECTION —

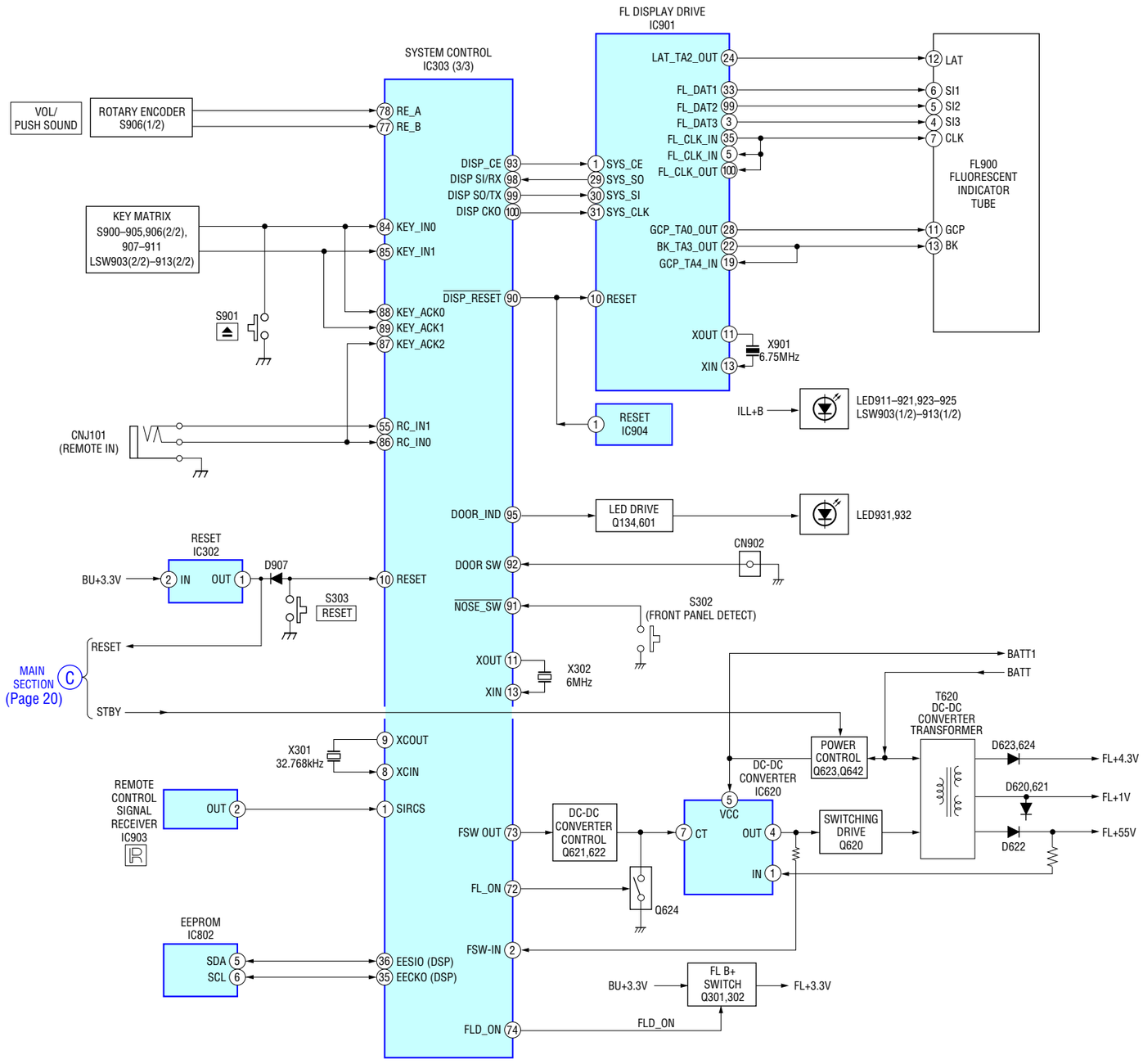

4-4. CIRCUIT BOARDS LOCATION

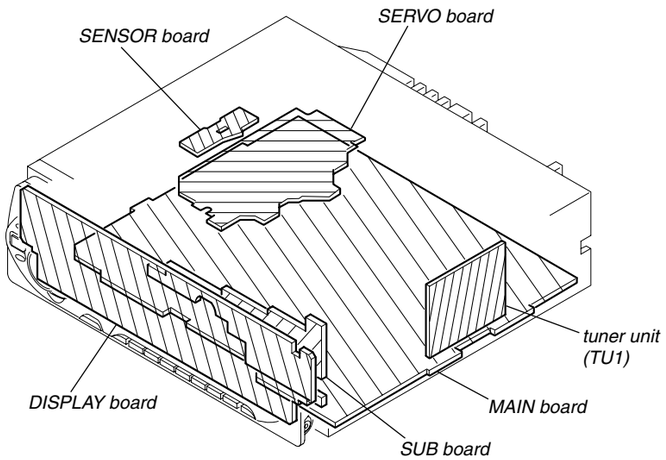

• Waveforms

— SERVO Board —
(CD PLAY)

① IC2 ⑤ (FEI)

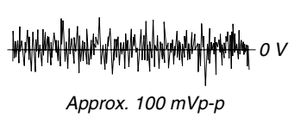

50 mV/DIV, 5 msec/DIV

④ IC2 ⑧① (RFI)

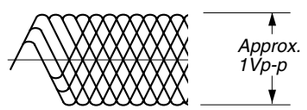

0.5 V/DIV, 0.5 µsec/DIV

⑦ IC3 ⑧① (X1)

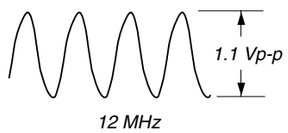

0.5 V/DIV, 0.2 µsec/DIV

② IC2 ⑥ (TEI)

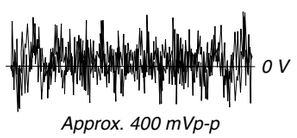

200 mV/DIV, 5 msec/DIV

⑤ IC2 ⑨④ (FNI2), ⑨⑤ (FNI1)

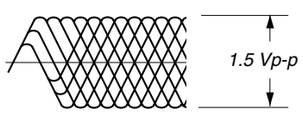

0.5 V/DIV, 0.5 µsec/DIV

③ IC2 ②③ (XI)

0.2 V/DIV, 0.2 µsec/DIV

⑥ IC2 ⑨⑥ (FPI2), ⑨⑦ (FPI1)

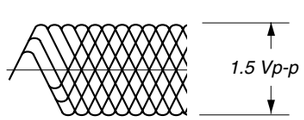

0.5 V/DIV, 0.5 µsec/DIV

— DISPLAY Board —

① IC901 ⑪ (XOUT)

1 V/div, 50 nsec/div

• NOTE FOR PRINTED WIRING BOARDS AND SCHEMATIC DIAGRAMS

THIS NOTE IS COMMON FOR PRINTED WIRING BOARDS AND SCHEMATIC DIAGRAMS.
(In addition to this, the necessary note is printed in each block.)

For schematic diagrams.

Note:
- All capacitors are in µF unless otherwise noted. (p: pF) 50 WV or less are not indicated except for electrolytics and tantalums.
- All resistors are in Ω and 1/4 W or less unless otherwise specified.
- △ : internal component.
- ▭ : panel designation.

Note:	**Note:**
The components identified by mark ⚠ or dotted line with mark ⚠ are critical for safety. Replace only with part number specified.	Les composants identifiés par une marque ⚠ sont critiques pour la sécurité. Ne les remplacer que par une piéce portant le numéro spécifié.

- ▬ : B+ Line.
- ▬ : B– Line.
- ▭ : adjustment for repair.
- Voltages and waveforms are dc with respect to ground under no-signal (detuned) conditions.
- CD mechanism section (1/2), (2/2)
  no mark : CD PLAY
- Main (1/4), (2/4), (3/4), (4/4) and Display sections
  no mark : FM/MW/LW
  < > : CD PLAY
  ∗ : Impossible to measure
- Voltages are taken with a VOM (Input impedance 10 MΩ). Voltage variations may be noted due to normal production tolerances.
- Waveforms are taken with a oscilloscope. Voltage variations may be noted due to normal production tolerances.
- Circled numbers refer to waveforms.
- Signal path.
  ⇨ : CD PLAY
  ⇨ : FM
  ➡ : MW/LW
  ⇨ : BUS AUDIO

For printed wiring boards.

Note:
- ○——— : parts extracted from the component side.
- ——— : parts extracted from the conductor side.
- ○ : Through hole.
- ▭ : Pattern from the side which enables seeing.

(The other layers' patterns are not indicated.)

Caution:	
Pattern face side: (Side B)	Parts on the pattern face side seen from the pattern face are indicated.
Parts face side: (Side A)	Parts on the parts face side seen from the parts face are indicated.

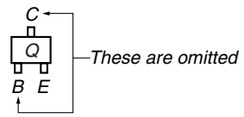

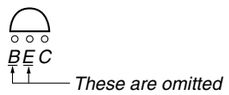

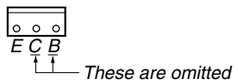

- Abbreviation
  CND : Canadian model.

— MAIN Board —

① IC551 ⑩ (XT0)

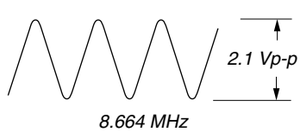

1 V/DIV, 50 nsec/DIV

③ IC650 ④ (OUT)

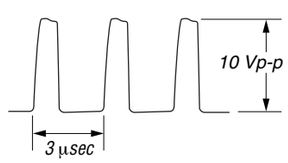

5 V/div, 1 µsec/div

⑤ IC303 ⑪ (XOUT)

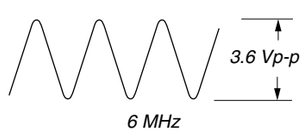

1 V/DIV, 50 nsec/DIV

② IC801 ③③ (MCLKI)

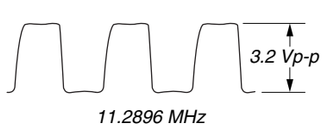

1 V/div, 50 nsec/div

④ IC303 ⑨ (XCOUT)

1 V/div, 10 µsec/div

⑥ IC620 ④ (OUT)

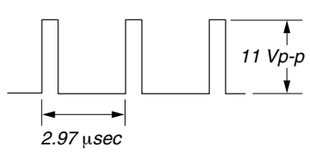

5 V/div, 1 µsec/div

4-5. PRINTED WIRING BOARDS — CD MECHANISM SECTION — • Refer to page 22 for Circuit Boards Location. : Uses unleaded solder.

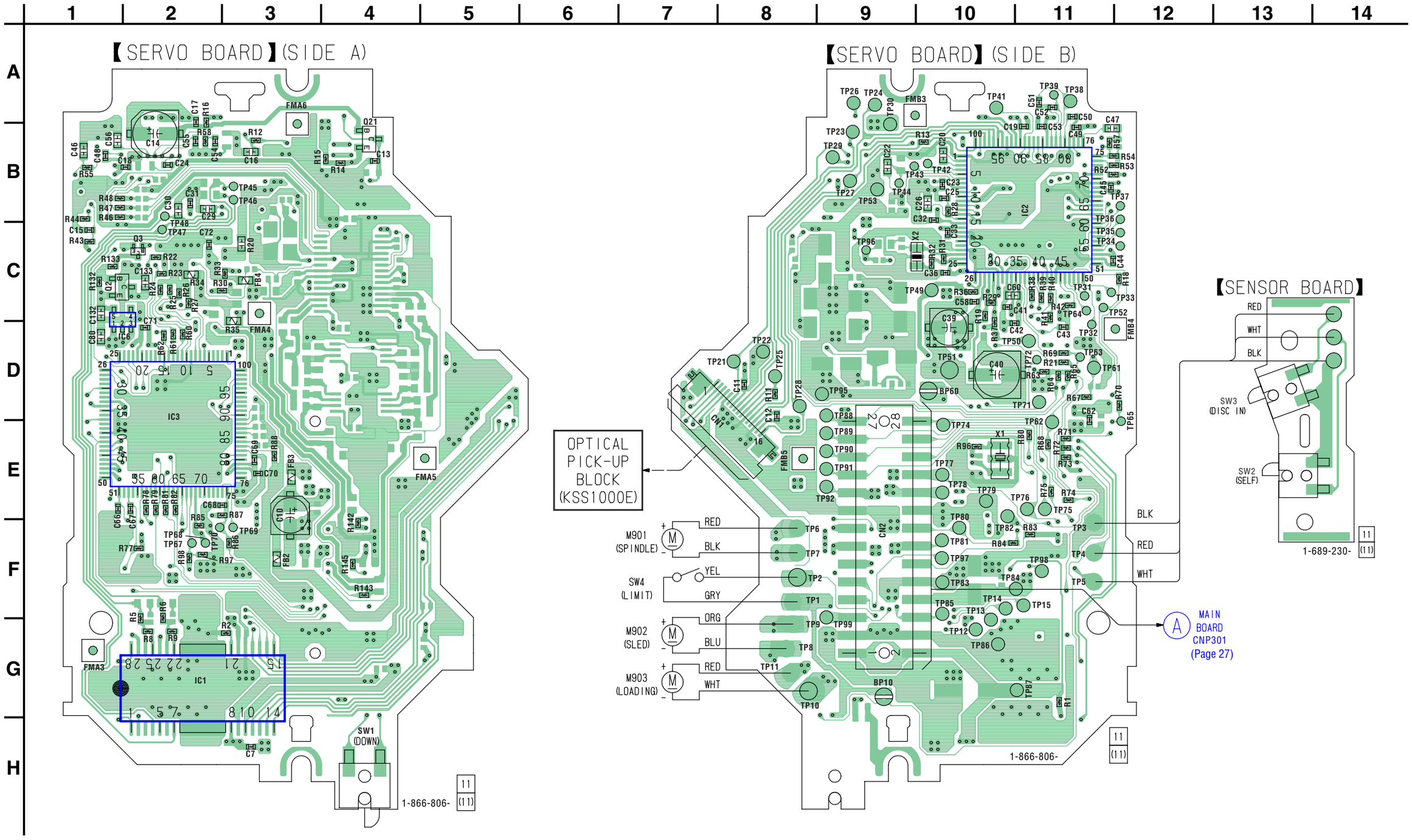

• **Semiconductor Location**

Ref. No.	Location
IC1	G-2
IC2	B-11
IC3	D-2
IC6	D-1
Q2	C-1
Q3	C-2
Q21	B-4

4-6. SCHEMATIC DIAGRAM — CD MECHANISM SECTION (1/2) — • Refer to page 22 for Waveforms.

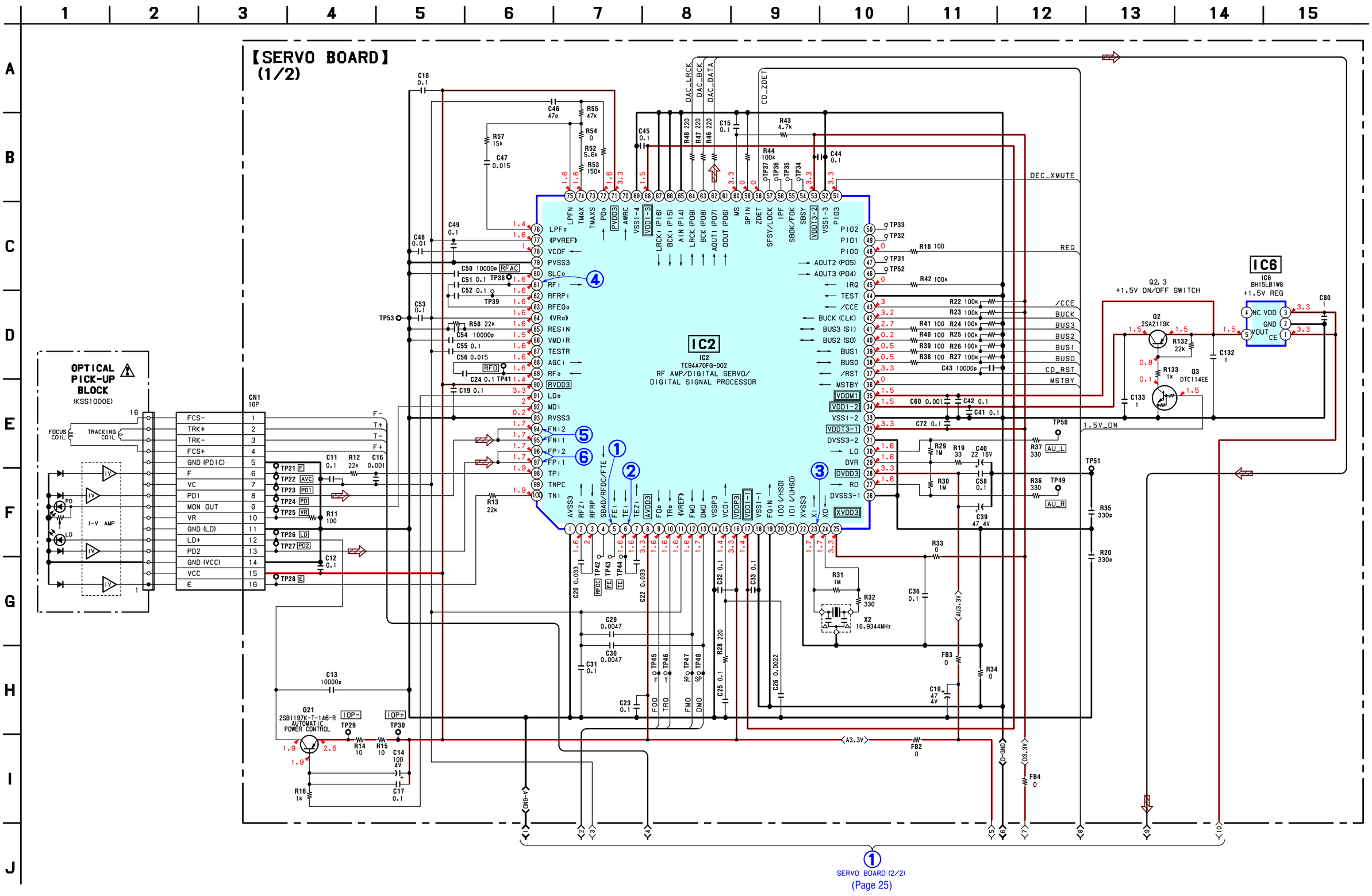

4-7. SCHEMATIC DIAGRAM — CD MECHANISM SECTION (2/2) —

• Refer to page 22 for Waveform.
• Refer to page 36 for IC Block Diagram.
• Refer to page 41 for IC Pin Descriptions.

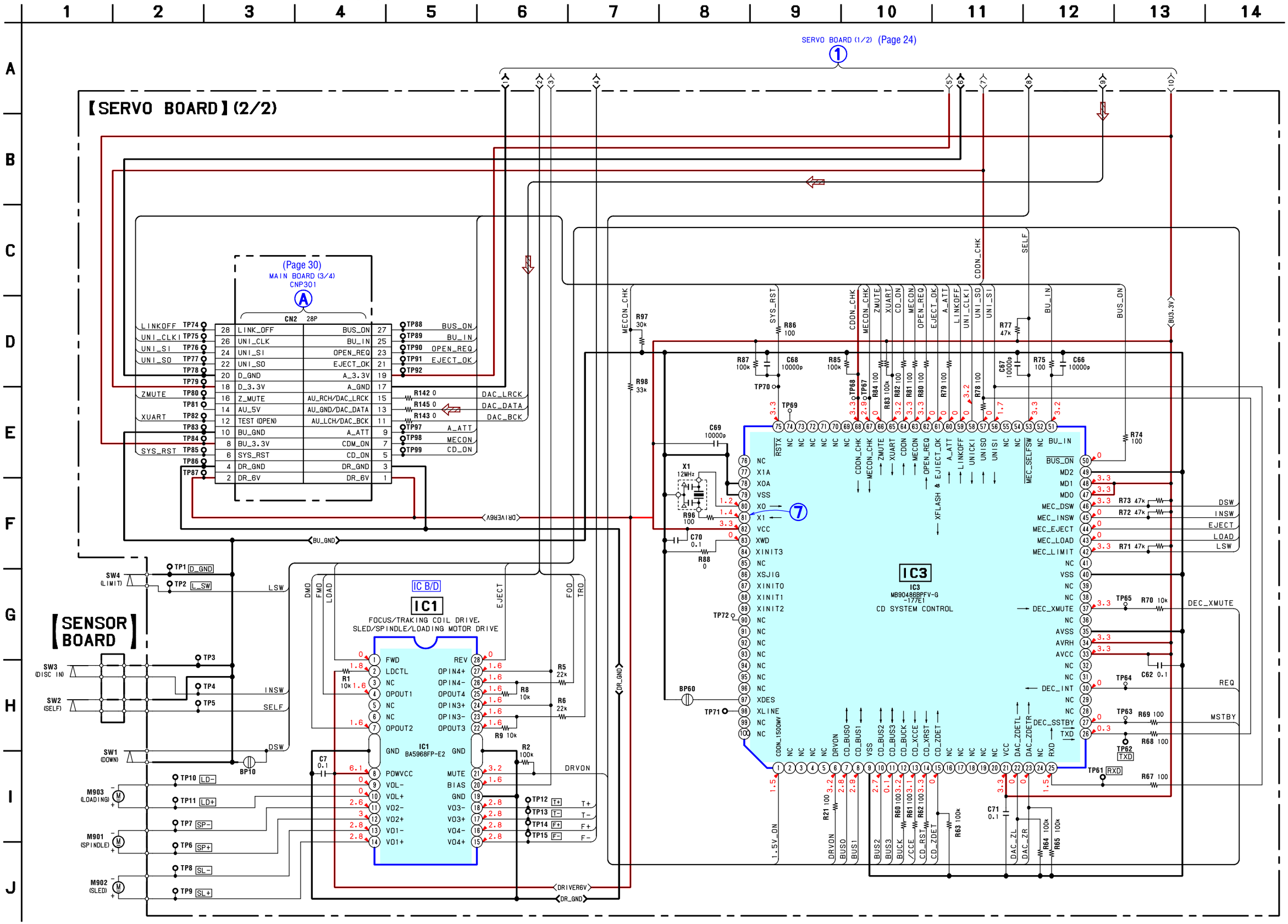

4-8. PRINTED WIRING BOARD — MAIN SECTION —

• Refer to page 22 for Circuit Boards Location. : Uses unleaded solder.

• **Semiconductor Location**

Ref. No.	Location	Ref. No.	Location
D101	C-10	IC302	H-6
D102	C-10	IC303	G-7
D103	C-10	IC402	D-4
D104	D-10	IC470	E-3
D105	D-10	IC471	F-4
D106	C-9	IC472	E-4
D108	D-8	IC474	G-4
D110	C-7	IC551	H-3
D111	C-7	IC620	H-10
D113	C-8	IC650	G-9
D114	C-8	IC801	E-7
D115	C-8	IC802	F-7
D116	C-9		
D117	C-9	Q101	D-10
D118	C-6	Q103	D-8
D119	C-6	Q110	D-9
D120	C-5	Q111	E-9
D121	C-6	Q112	E-9
D301	F-9	Q134	I-4
D322	H-7	Q171	C-4
D401	C-5	Q181	C-3
D501	F-2	Q271	C-4
D625	H-9	Q281	C-3
D626	H-9	Q301	I-7
D630	I-8	Q302	I-7
D653	G-9	Q380	E-2
D840	I-3	Q470	C-3
D843	I-3	Q501	F-2
D844	I-3	Q551	H-4
D846	I-3	Q552	H-4
D849	I-3	Q601	I-4
D851	I-2	Q621	H-10
D907	H-6	Q622	H-10
D909	D-9	Q623	H-9
		Q624	H-9
IC110	E-10	Q642	H-9
IC301	G-6	Q907	D-8

【MAIN BOARD】(SIDE A)

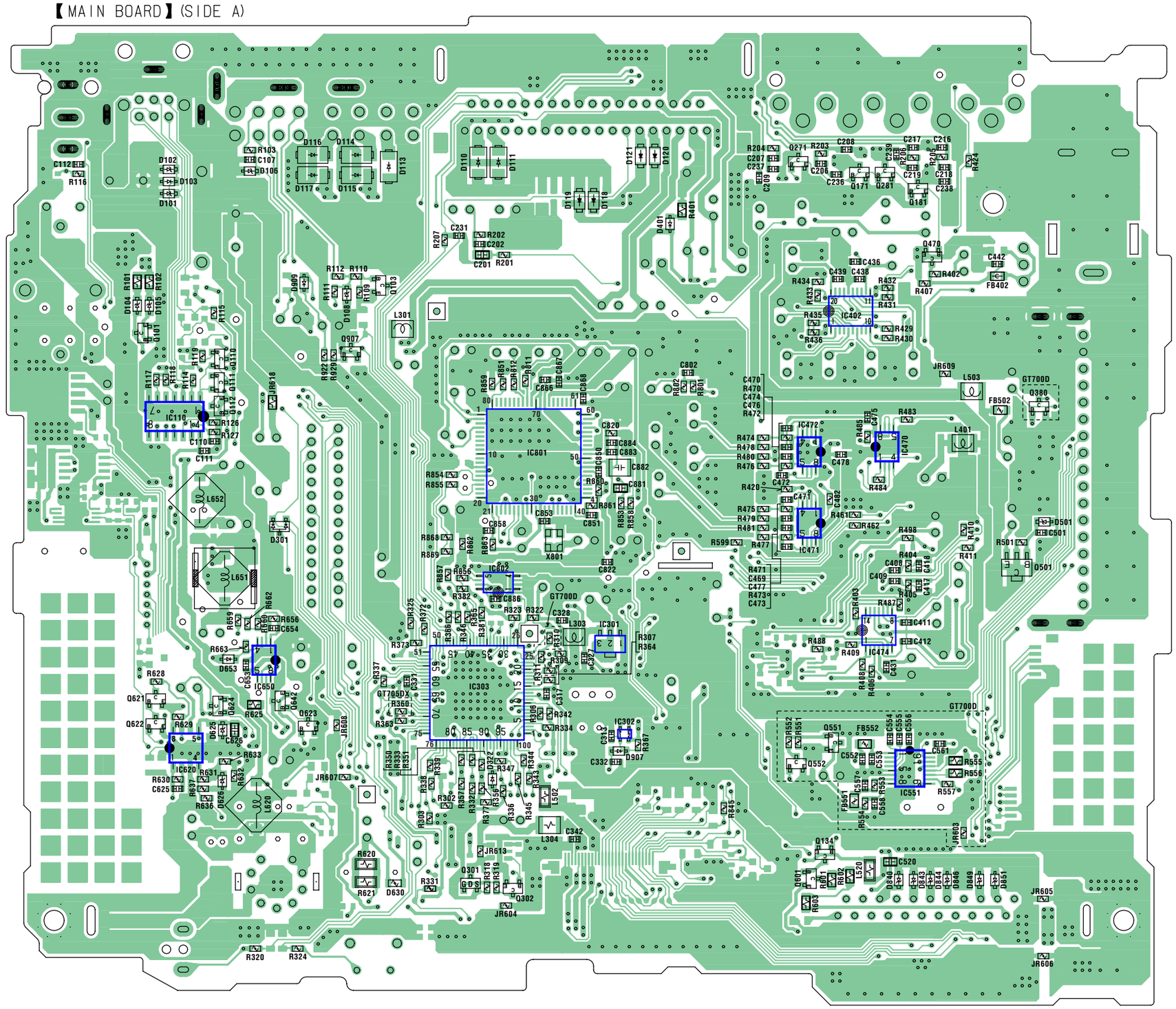

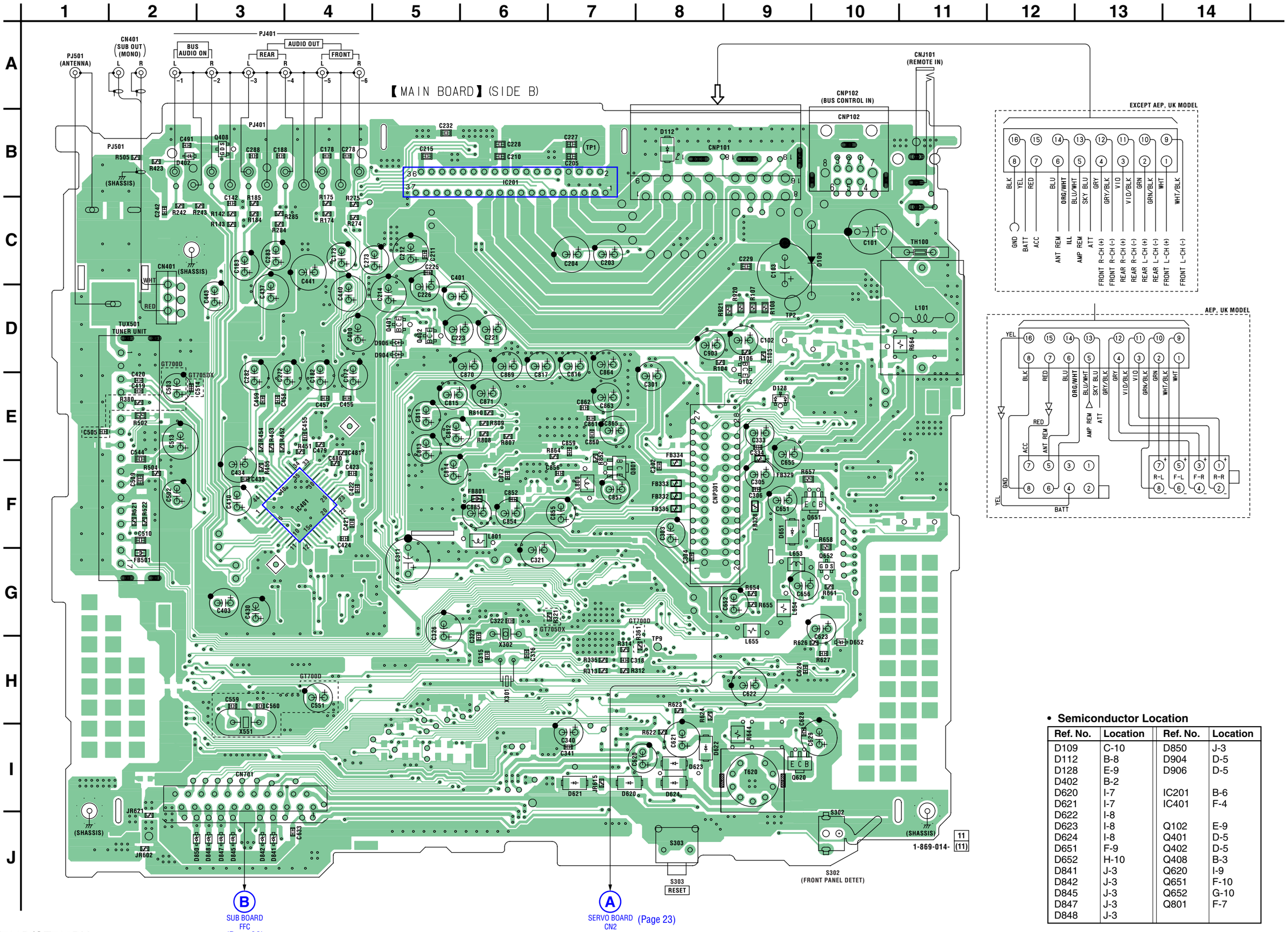

• **Semiconductor Location**

Ref. No.	Location	Ref. No.	Location
D109	C-10	D850	J-3
D112	B-8	D904	D-5
D128	E-9	D906	D-5
D402	B-2		
D620	I-7	IC201	B-6
D621	I-7	IC401	F-4
D622	I-8		
D623	I-8	Q102	E-9
D624	I-8	Q401	D-5
D651	F-9	Q402	D-5
D652	H-10	Q408	B-3
D841	J-3	Q620	I-9
D842	J-3	Q651	F-10
D845	J-3	Q652	G-10
D847	J-3	Q801	F-7
D848	J-3		

4-9. SCHEMATIC DIAGRAM — MAIN SECTION (1/4) —

- Refer to page 22 for Waveforms.
- Refer to page 35 for IC Block Diagrams.

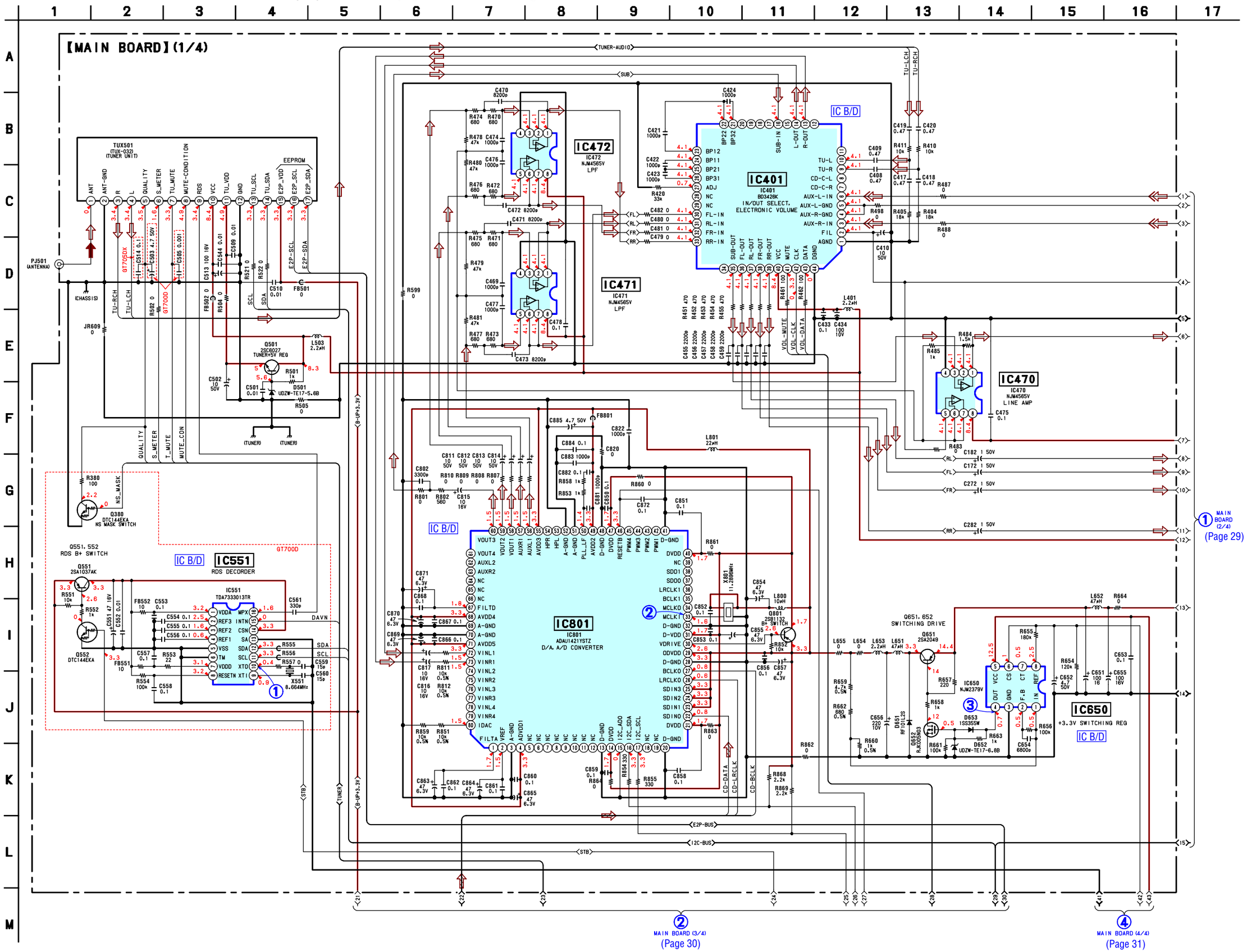

4-10. SCHEMATIC DIAGRAM — MAIN SECTION (2/4) — • Refer to page 37 for IC Block Diagrams.

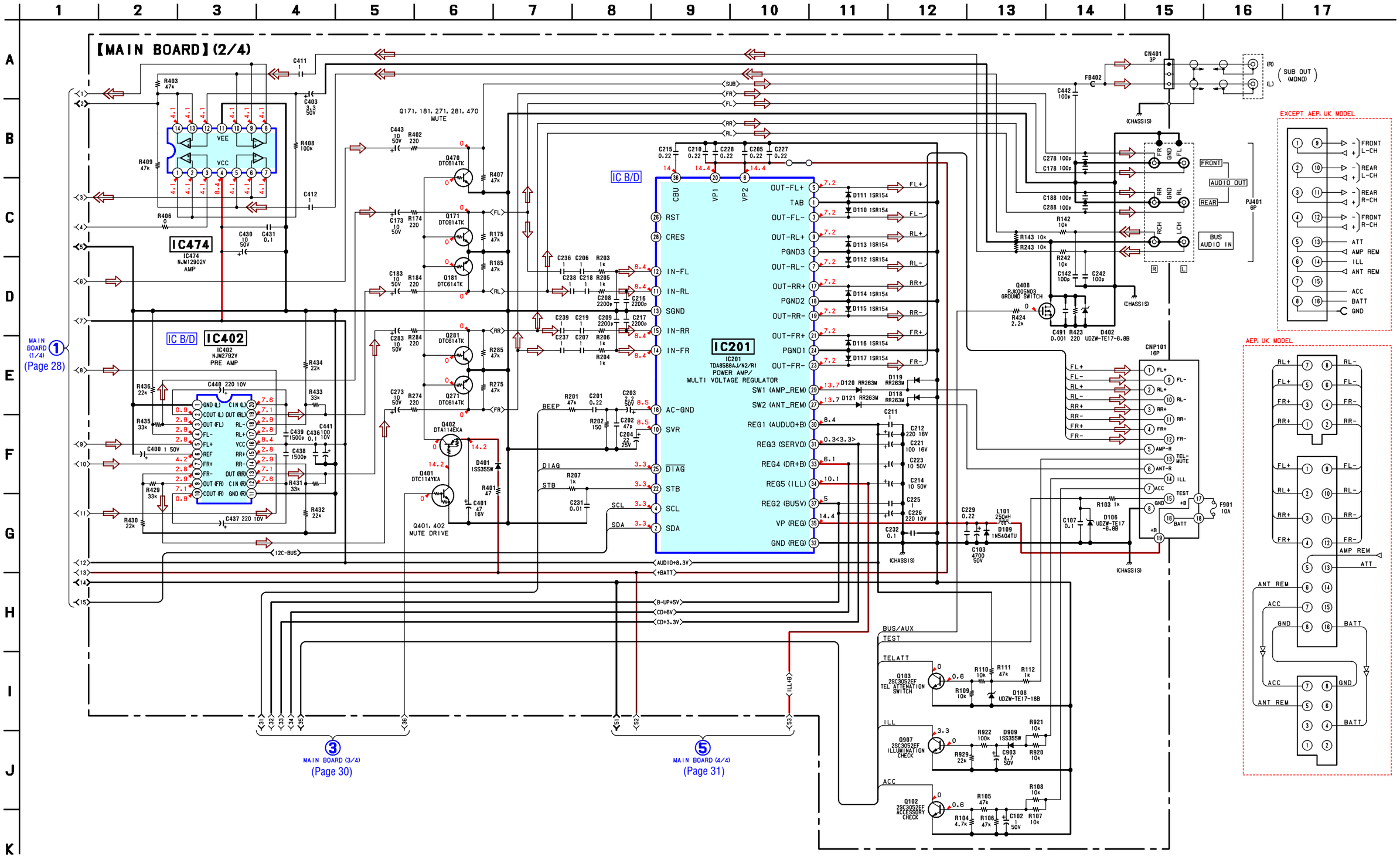

4-11. SCHEMATIC DIAGRAM — MAIN SECTION (3/4) —

- Refer to page 22 for Waveforms.
- Refer to page 43 for IC Pin Descriptions.

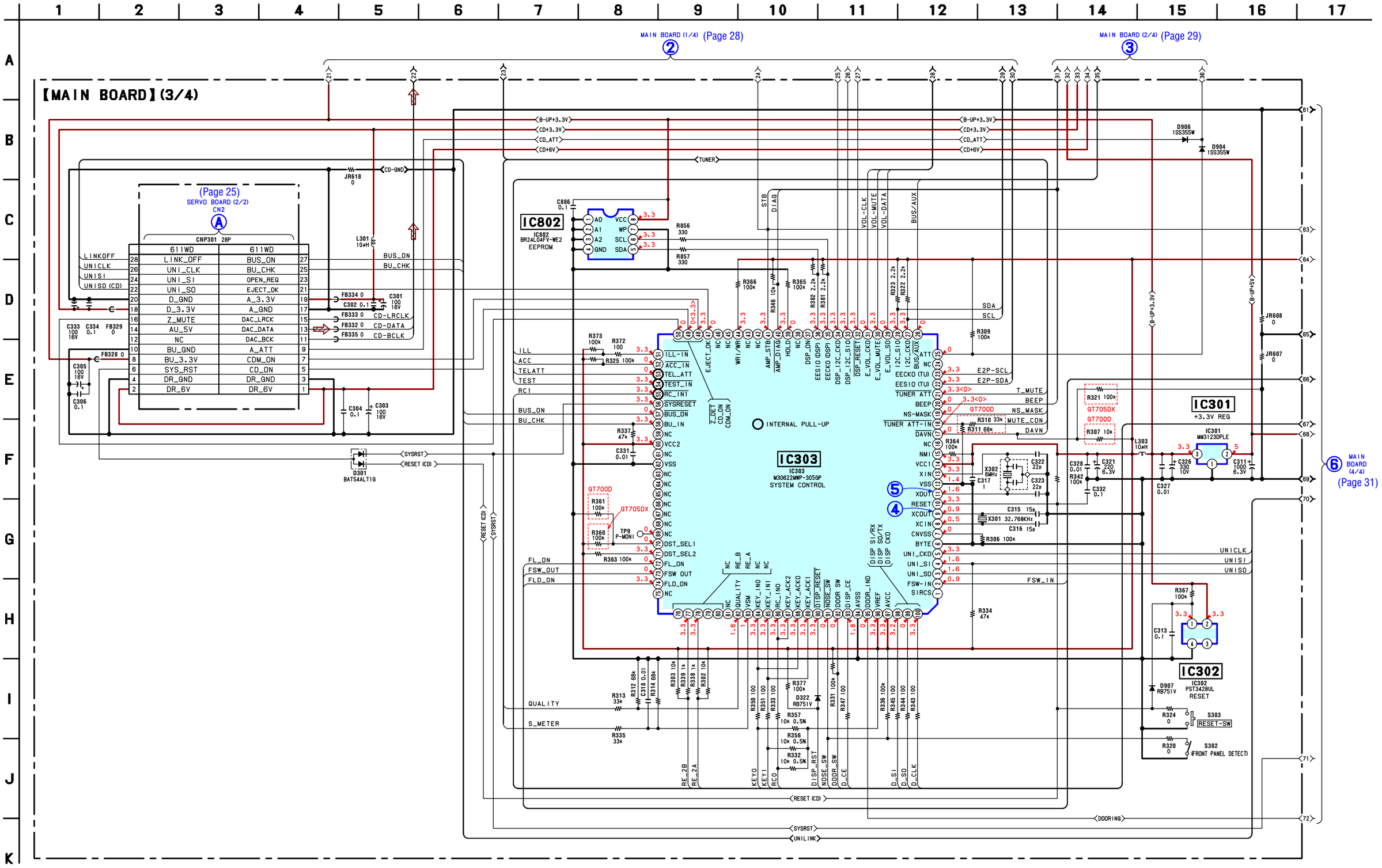

4-12. SCHEMATIC DIAGRAM — MAIN SECTION (4/4) — • Refer to page 40 for IC Block Diagrams.

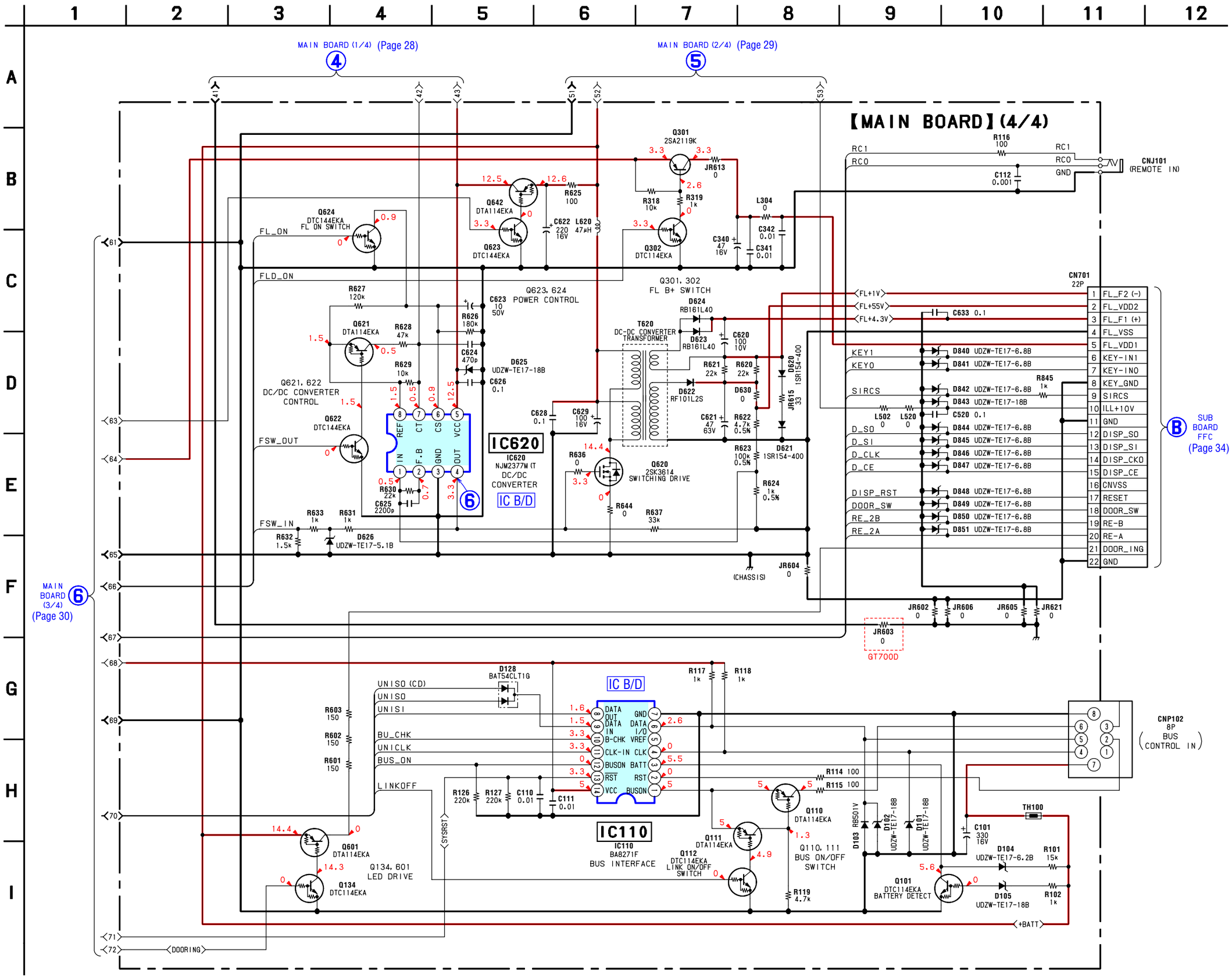

4-13. PRINTED WIRING BOARDS — SUB SECTION — • Refer to page 22 for Circuit Boards Location. : Uses unleaded solder.

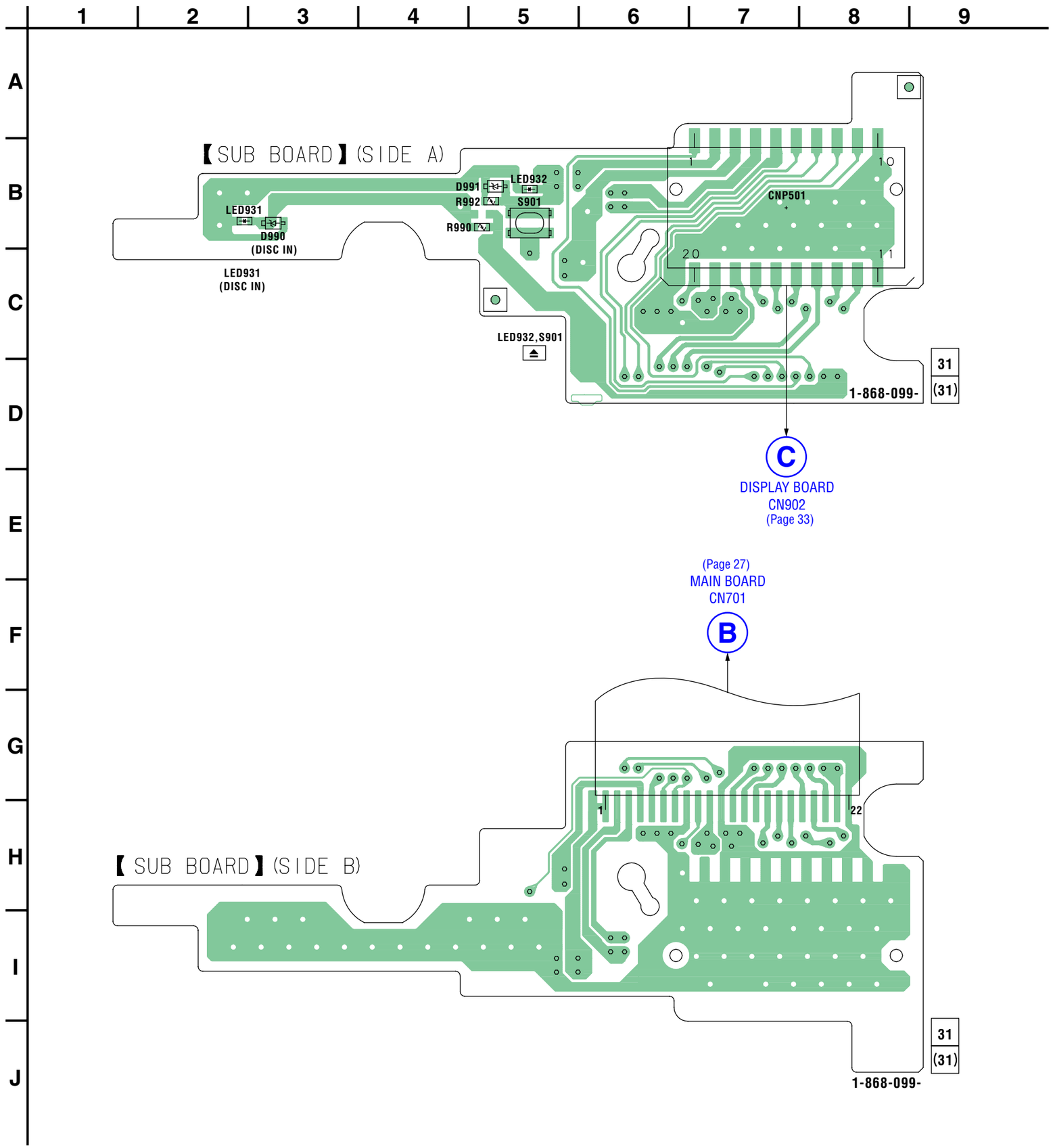

4-14. PRINTED WIRING BOARD — DISPLAY SECTION — • Refer to page 22 for Circuit Boards Location. : Uses unleaded solder.

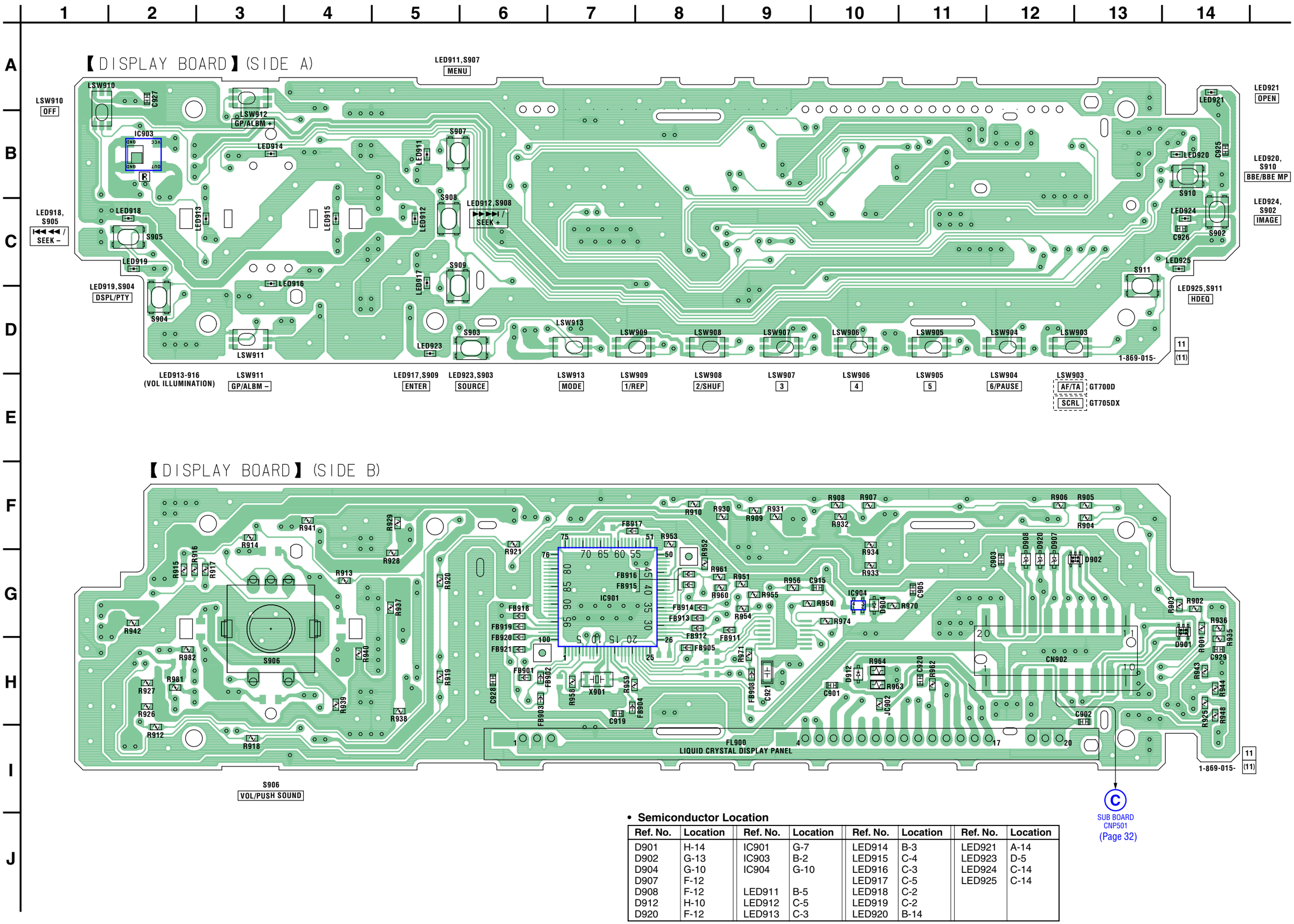

• **Semiconductor Location**

Ref. No.	Location	Ref. No.	Location	Ref. No.	Location	Ref. No.	Location
D901	H-14	IC901	G-7	LED914	B-3	LED921	A-14
D902	G-13	IC903	B-2	LED915	C-4	LED923	D-5
D904	G-10	IC904	G-10	LED916	C-3	LED924	C-14
D907	F-12			LED917	C-5	LED925	C-14
D908	F-12	LED911	B-5	LED918	C-2		
D912	H-10	LED912	C-5	LED919	C-2		
D920	F-12	LED913	C-3	LED920	B-14		

4-15. SCHEMATIC DIAGRAM — DISPLAY SECTION —

• Refer to page 22 for Waveform.
• Refer to page 45 for IC Pin Descriptions.

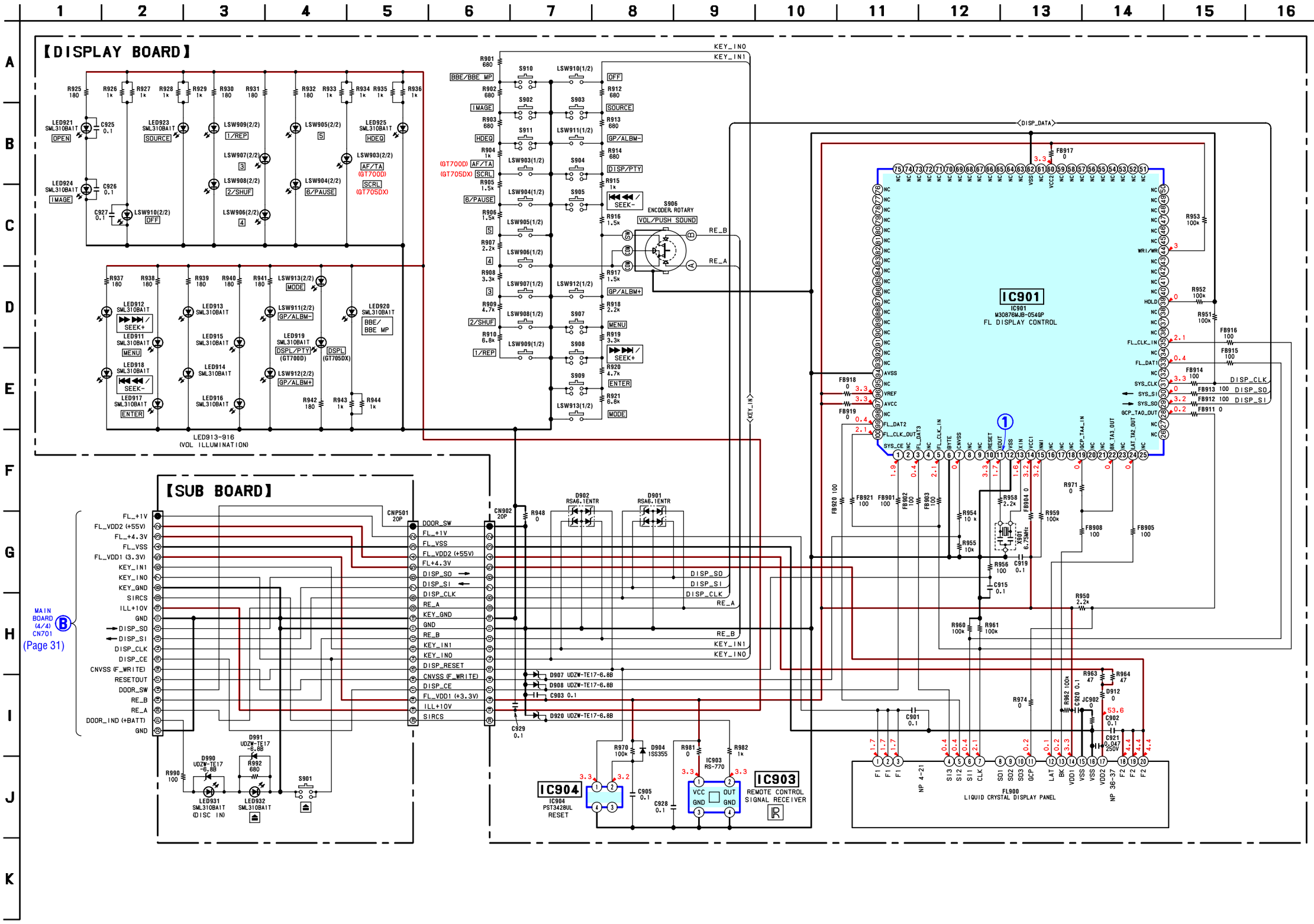

• IC BLOCK DIAGRAMS

IC801 ADAU1421YSTZ (MAIN Board (1/4))

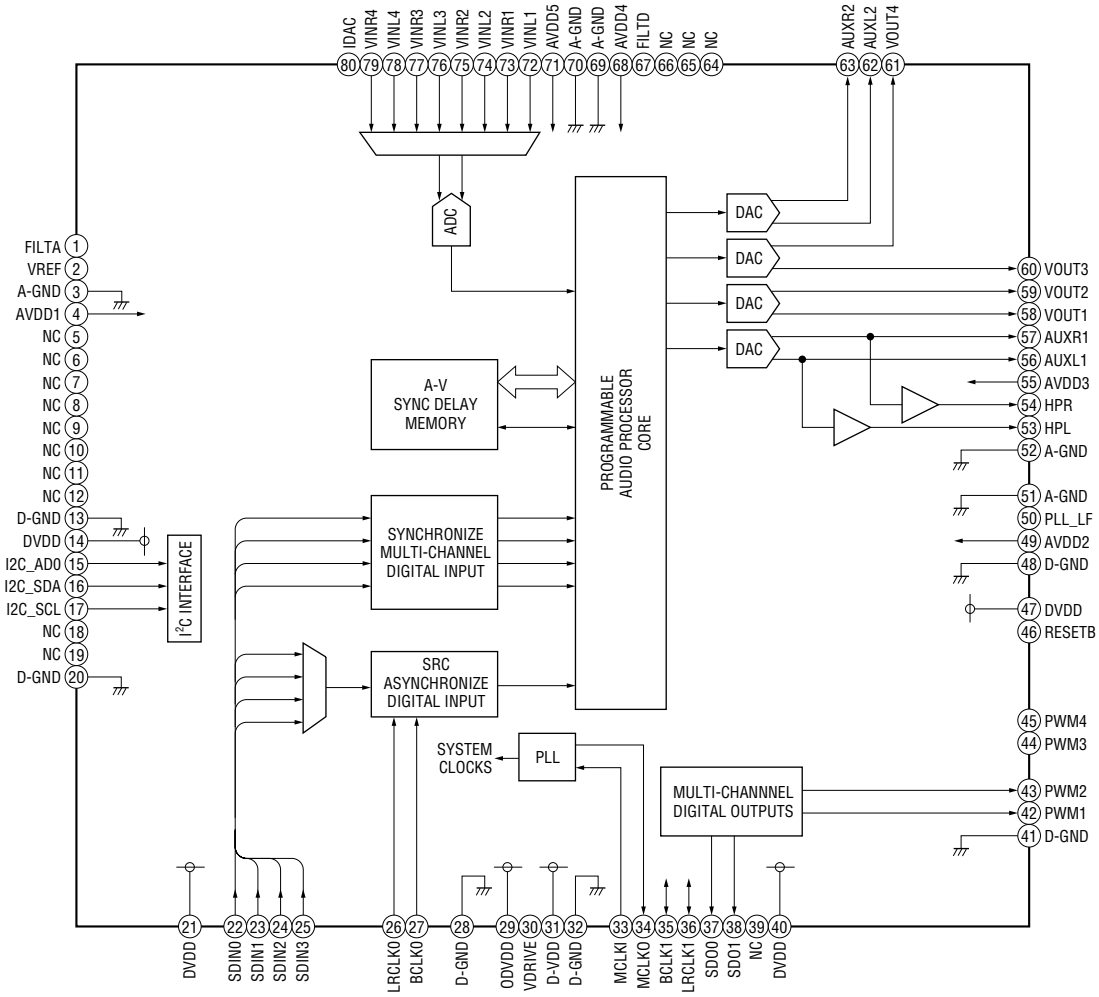

IC650 NJM2379V (MAIN Board (1/4))

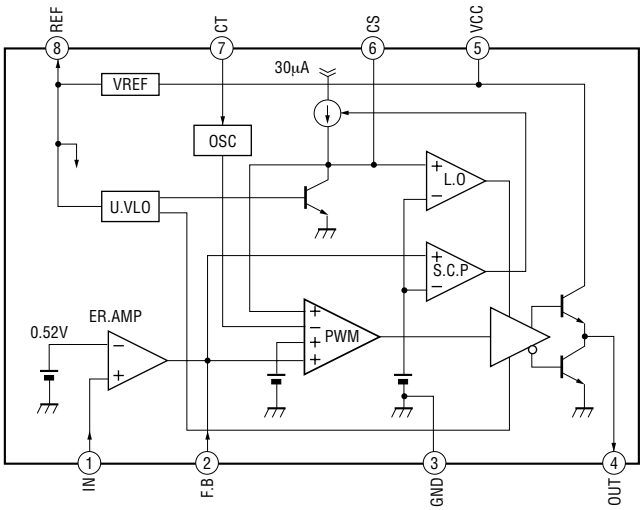

IC1 BA5968FP-E2 (SERVO Board (2/2))

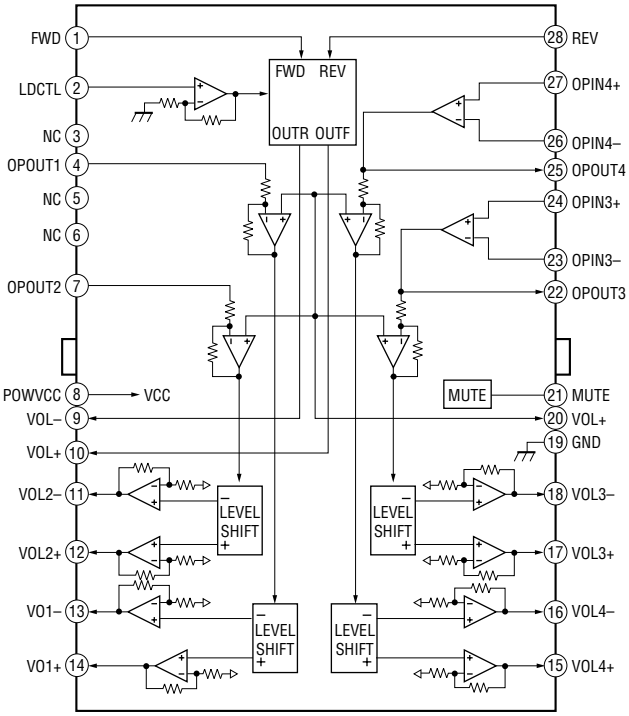

IC551 TDA7333013TR (MAIN Board (1/4))

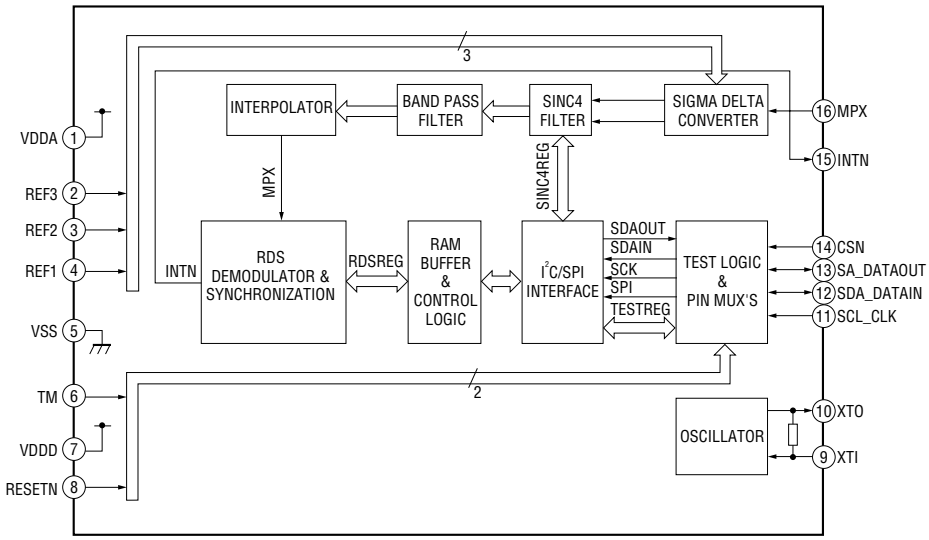

IC402 NJM2792V (MAIN Board (2/4))

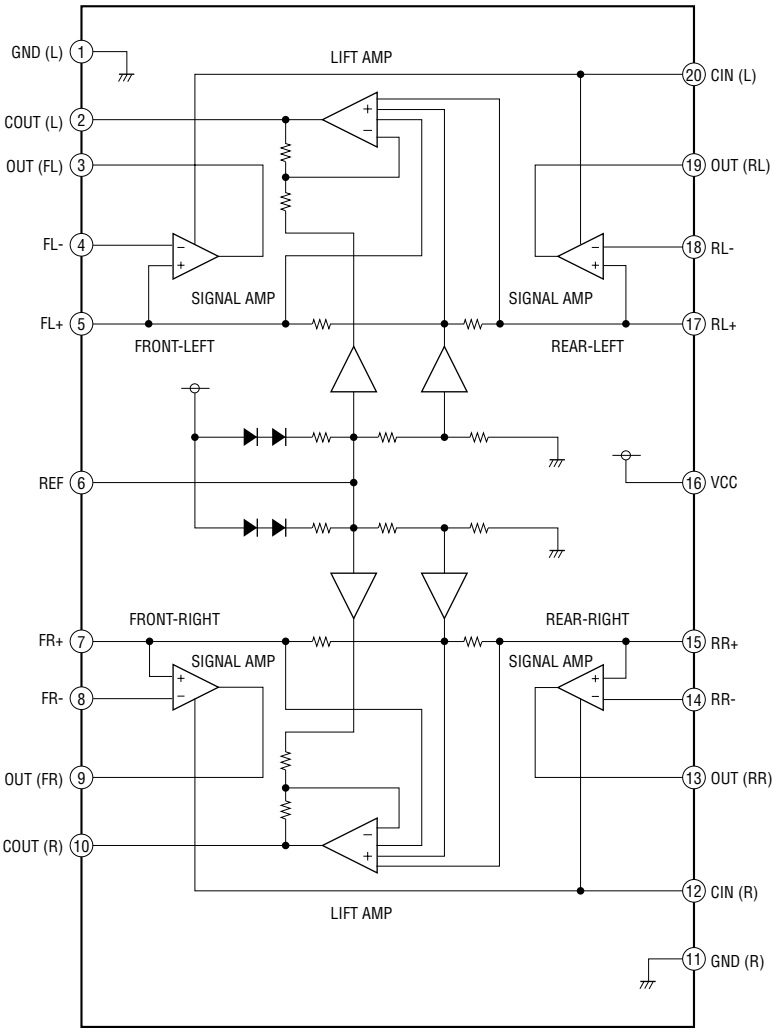

IC401 BD3426K-E2 (MAIN Board (1/4))

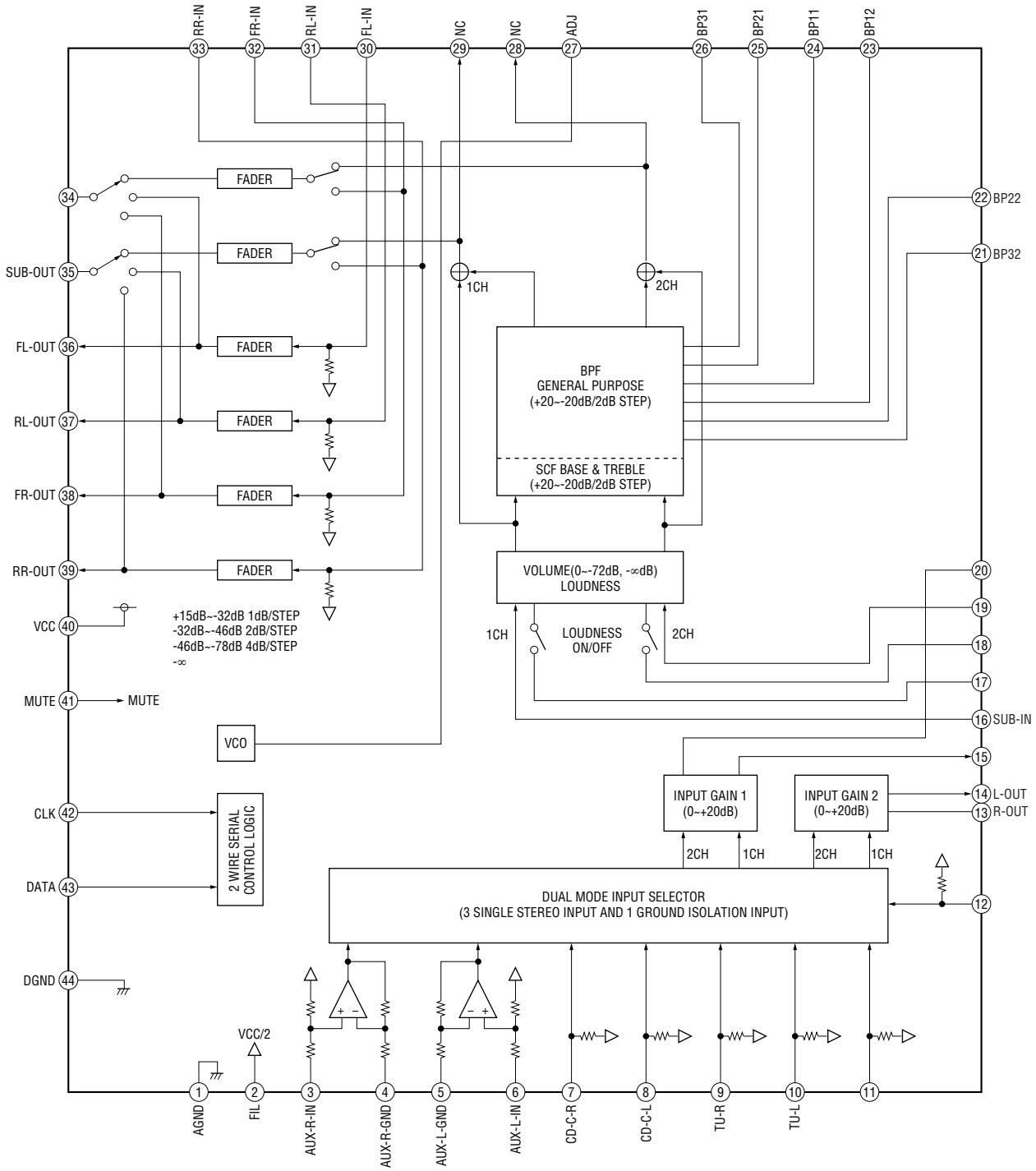

IC201 TDA8588AJ/N2/R1 (MAIN Board (2/4))

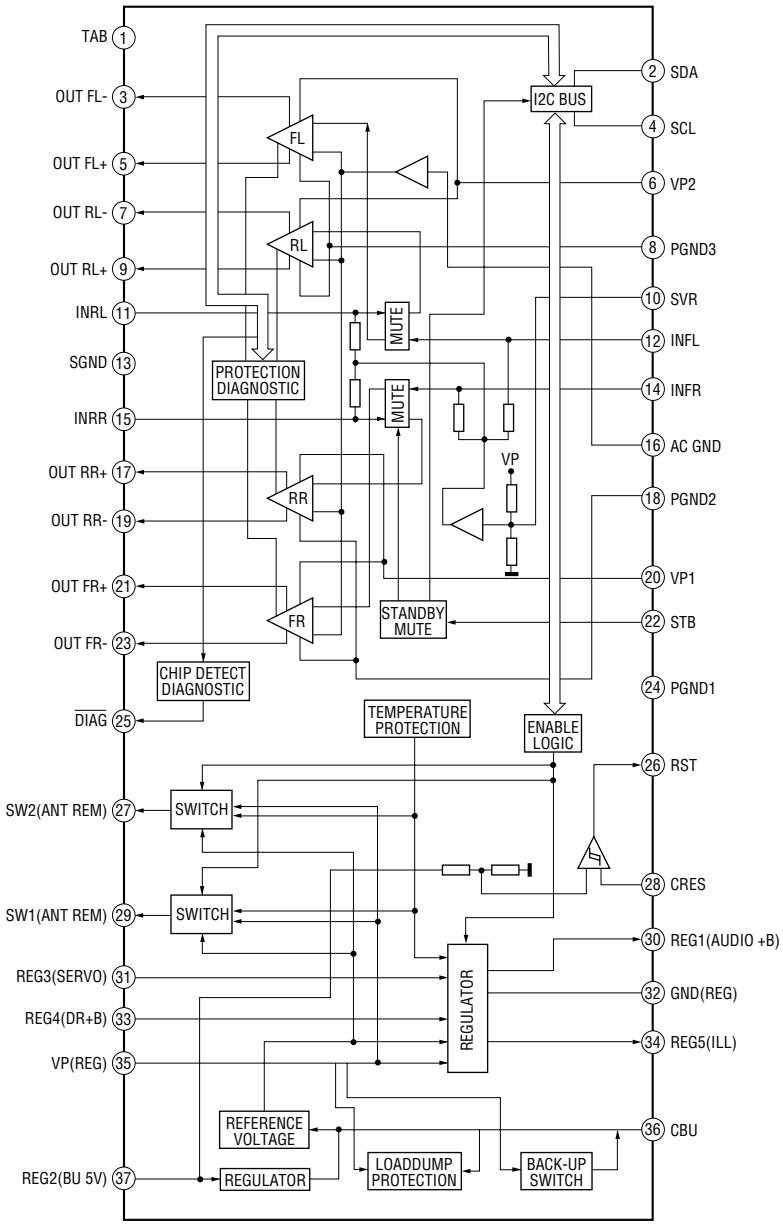

IC620 NJM2377M(TE2) (MAIN Board (4/4))

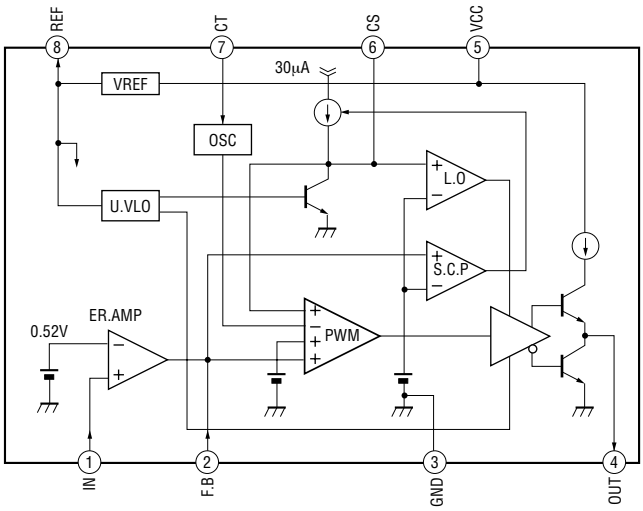

IC110 BA8271F-E2 (MAIN Board (4/4))

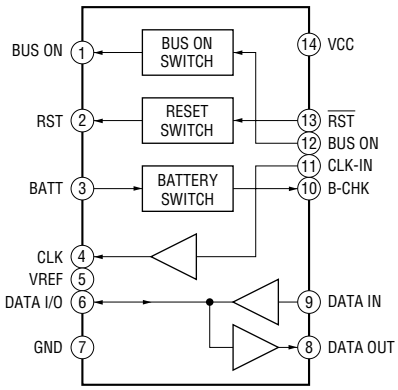

• IC PIN DESCRIPTIONS

• IC3 MB90486BPFV-G-177E1 (CD SYSTEM CONTROL) (SERVO BOARD (2/2))

Pin No.	Pin Name	I/O	Pin Description
1	CDON_1500MV	O	Servo 1.5 V power supply control signal output
2 to 5	NC	—	Not used. (Open)
6	DRVON	O	Motor drive mute signal output
7	CD_BUS0	I/O	Bus data input/output 0
8	CD_BUS1	I/O	Bus data input/output 1
9	VSS	—	Ground
10	CD_BUS2	I/O	Bus data input/output 2
11	CD_BUS3	I/O	Bus data input/output 3
12	CD_BUCK	O	Bus clock signal output
13	CD_XCCE	O	Chip enable signal output
14	CD_XRST	O	Reset signal output
15	CD_ZDET	I	Zero detection signal input
16 to 20	NC	—	Not used. (Open)
21	VCC	—	Power supply pin (+3.3 V)
22	DAC_ZDETL	I	Not used. (Pull down)
23	DAC_ZDETR	I	Not used. (Pull down)
24	NC	—	Not used. (Open)
25	RXD	I	UART RXD data input (MCBUS/Flash data input)
26	TXD	O	UART TXD data output (MCBUS/Flash data output)
27	DEC_SSTBY	O	SRAM STANDBY mode control signal output
28, 29	NC	—	Not used. (Open)
30	DEC_INT	I	Request signal input
31, 32	NC	—	Not used. (Open)
33	AVCC	—	Power supply pin (+3.3 V) for A/D converter
34	AVRH	—	External reference voltage for A/D converter
35	AVSS	—	Ground
36	NC	—	Not used. (Open)
37	DEC_XMUTE	O	Mute signal output L: mute
38, 39	NC	—	Not used. (Open)
40	VSS	—	Ground
41	NC	—	Not used. (Open)
42	MEC_LIMIT	I	Sled limit in detection switch signal input
43	MEC_LOAD	O	Loading motor signal output (Load direction)
44	MEC_EJECT	O	Loading motor signal output (Eject direction)
45	MEC_INSW	I	Pack-in detection signal input
46	MEC_DSW	I	Chucking end detection switch signal input
47, 48	MD0, MD1	I	CPU operation mode designation signal input (Connected to Vcc.)
49	MD2	I	CPU operation mode designation signal input (Connected to Vss.)
50	$\overline{\text{BUS\_ON}}$	I	Bus on signal input L: bus on
51	BU_IN	I	Backup power supply detect signal input
52	NC	I	Not used. (Open)
53	$\overline{\text{MEC\_SELFSW}}$	I	Disc insert detection switch signal input L: disc in interruption
54, 55	NC	—	Not used. (Open)
56	UNISI	I	Control bus serial data input
57	UNISO	O	Control bus serial data output
58	UNICKI	I	Control bus serial clock input
59	LINKOFF	O	Bus link off signal output
60	A_ATT	O	Audio mute signal output H: mute on

Pin No.	Pin Name	I/O	Pin Description
61	XFLASH&EJECT_OK	I	Front panel open signal input H: eject
62	OPEN_REQ	O	Front panel open/close request signal output Not used in this set.
63	MECON	O	Mechanism deck power supply control signal output
64	CDON	O	Servo power supply control signal output
65	XUART	I	S-Bus/MC-Bus change signal input H: S-Bus, L: MC-Bus
66	ZMUTE	O	Zero detection mute signal output
67	MECON_CHK	I	CD +6V power rising detection signal input
68	CDON_CHK	I	CD +3.3V power rising detection signal input
69 to 74	NC	—	Not used. (Open)
75	$\overline{\text{RSTX}}$	I	System reset signal input
76	NC	—	Not used. (Open)
77	X1A	—	Not used. (Open)
78	X0A	—	Connected to Vss
79	VSS	—	Ground
80	X0	I	Main-clock INPUT (12 MHz)
81	X1	O	Main-clock OUTPUT (12 MHz)
82	VCC	—	Power supply pin (+3.3 V)
83	XWD	I	Connected to Vss
84	XINIT3	I	Not used. (Open)
85	NC	—	Not used. (Open)
86	XSJIG	I	Not used. (Open)
87 to 89	XINIT0 to 2	I	Not used. (Open)
90 to 96	NC	—	Not used. (Open)
97	XDES	I	Destination setting pin
98	XLINE	I	Not used. (Open)
99, 100	NC	—	Not used. (Open)

• **IC303 M30622MWP-305GP (SYSTEM CONTROL) (MAIN BOARD (3/4))**

Pin No.	Pin Name	I/O	Pin Description
1	SIRCS	I	Remote control data signal input
2	FSW-IN	I	FL DC-DC converter frequency count input
3	UNI_SO	O	Control bus serial data output
4	UNI_SI	I	Control bus serial data input
5	UNI_CKO	O	Control bus serial clock output
6	BYTE	I	Not used (Connect to ground)
7	CNVSS	I	Not used Fixed at “L”
8	XCIN	I	Sub clock signal input (32.768 kHz)
9	XCOUT	O	Sub clock signal output (32.768 kHz)
10	RESET	I	Reset signal input
11	XOUT	O	Main clock signal output (6 MHz)
12	VSS	—	Ground
13	XIN	I	Main clock signal input (6 MHz)
14	VCC1	—	Power supply pin (+3.3 V)
15	NMI	I	Non-maskable interruption signal input Fixed at “H”
16	NC	—	Not used (Open)
17	$\overline{\text{DAVN}}$	I	RDS data block synchronization detection signal input
18	$\overline{\text{TUNER ATT-IN}}$	I	Tuner attenuation zero cross input
19	NS-MASK	O	Tuner noise detect mask signal output
20	BEEP	O	Beep signal output
21	TUNER ATT	O	Tuner mute signal output
22	EESIO(TU)	I/O	Tuner pack EEPROM data signal input/output
23	EECKO(TU)	O	Tuner pack EEPROM clock signal output
24	NC	—	Not used (Open)
25	ATT	O	Line mute signal output
26	BUS/$\overline{\text{AUX}}$	O	Bus audio/AUX exchange signal output
27	I2C_CKO	O	I2C serial transfer clock output
28	I2C_SIO	I/O	I2C serial data input/output
29	E_VOL_SO	O	E-VOL serial data output
30	E_VOL_MUTE	O	E-VOL mute signal output
31	E_VOL_CKO	O	E-VOL serial transfer clock output
32	$\overline{\text{DSP\_RESET}}$	O	DSP reset signal output
33	DSP_I2C_SIO	I/O	DSP I2C data input/output
34	DSP_I2C_CKO	O	DSP I2C serial transfer clock output
35	EECKO (DSP)	O	EEPROM serial transfer clock output
36	EESIO (DSP)	I/O	EEPROM serial data input/output
37	DSP_ON	O	DSP power supply on signal output
38	NC	—	Not used (Open)
39	HOLD	I	Not used Fixed at “L”
40	$\overline{\text{AMP\_DIAG}}$	I	Amplifier self-diagnostic test function signal input
41	AMP_STB	O	Amplifier standby signal output
42	NC	—	Not used (Open)
43	NC	—	Not used (Open)
44	WRI/WR	I	External data bus (WRI/WR) input Fixed at “H”
45	NC	—	Not used (Open)
46	NC	—	Not used (Open)
47	EJECT_OK	O	Eject OK signal output
48	CDM_ON	I	Mechanism deck power supply ON signal input
49	CD_ON	I	Servo power supply ON signal input

Pin No.	Pin Name	I/O	Pin Description
50	$\overline{\text{Z\_DET}}$	I	Zero detection mute signal input
51	$\overline{\text{ILL-IN}}$	I	Illumination check signal input
52	$\overline{\text{ACC\_IN}}$	I	Accessory check signal input
53	$\overline{\text{TEL\_ATT}}$	I	Telephone mute signal input
54	$\overline{\text{TEST\_IN}}$	I	Test mode signal input
55	$\overline{\text{RC\_IN1}}$	I	Remote control signal input 1
56	$\overline{\text{SYSRESET}}$	O	System reset signal output
57	$\overline{\text{BUS\_ON}}$	O	BUS ON signal output
58	BU_IN	I	Backup power supply detection signal input
59	NC	—	Not used (Open)
60	VCC2	—	Power supply (+3.3 V)
61	NC	—	Not used (Open)
62	VSS	—	Ground
63	NC	—	Not used (Open)
64	NC	—	Not used (Open)
65	NC	—	Not used (Open)
66	NC	—	Not used (Open)
67	NC	—	Not used (Open)
68	NC	—	Not used (Open)
69	NC	—	Not used (Open)
70	DST_SEL1	I	Destination/setting port signal input 1
71	DST_SEL2	I	Destination/setting port signal input 2
72	FL_ON	O	FL power supply on/off signal output
73	FSW OUT	O	FL DC-DC converter frequency exchange signal output
74	FLD_ON	O	FL driver power supply on/off signal output
75	NC	—	Not used (Open)
76	NC	—	Not used (Open)
77	RE_B	I	Rotary encoder signal input B
78	RE_A	I	Rotary encoder signal input A
79	NC	—	Not used (Open)
80	NC	—	Not used (Open)
81	NC	—	Not used (Open)
82	QUALITY	I	Tuner noise detect signal input
83	VSM	I	S-meter voltage signal input
84	KEY_IN0	I	Key signal input 1
85	KEY_IN1	I	Key signal input 2
86	RC_IN0	I	Remote control signal input 0
87	KEY_ACK2	I	Key acknowledge signal input 0
88	KEY_ACK0	I	Key acknowledge signal input 1
89	KEY_ACK1	I	Key acknowledge signal input 2
90	$\overline{\text{DISP\_RESET}}$	O	Display control reset signal output
91	$\overline{\text{NOSE\_SW}}$	I	Front panel detect signal input
92	DOOR SW	I	Front panel open/close signal input
93	DISP_CE	O	Display control chip enable signal output
94	AVSS	—	Ground
95	DOOR_IND	O	DISC IN illumination on signal output
96	VREF	—	Reference voltage for A/D convert
97	AVCC	—	Power supply (+3.3 V)
98	DISP SI/RX	I	Display control serial data signal input
99	DISP SO/TX	O	Display control serial data signal output
100	DISP CKO	O	Display control serial transfer clock output

• **IC901 M30876MJB-054GP (FL DISPLAY CONTOROL) (DISPLAY BOARD)**

Pin No.	Pin Name	I/O	Pin Description
1	SYS_CE	I	Chip enable signal input
2	NC	—	Not used (Open)
3	FL_DAT3	O	FL serial data-3 output
4	NC	—	Not used (Open)
5	FL_CLK_IN	I	FL serial transfer clock input (Connected to 35,100 pin)
6	BYTE	I	Connected to ground
7	CNVSS	I	Flash write port Fixed at “L”
8	NC	—	Not used (Open)
9	NC	—	Not used (Open)
10	RESET	I	Reset signal input
11	XOUT	O	Main clock signal output (6.75 MHz)
12	VSS	—	Ground
13	XIN	I	Main clock signal input (6.75 MHz)
14	VCC1	—	Power supply (+3.3V)
15	NMI	I	Non-maskable interruption signal input Fixed at “H”
16	NC	—	Not used (Open)
17	NC	—	Not used (Open)
18	NC	—	Not used (Open)
19	GCP_TA4_IN	I	FL BK signal input (Connected to 22 pin)
20	NC	—	Not used (Open)
21	NC	—	Not used (Open)
22	BK_TA3_OUT	O	FL BK signal output (Connected to 19 pin)
23	NC	—	Not used (Open)
24	LAT_TA2_OUT	O	FL LAT signal output
25	NC	—	Not used (Open)
26	NC	—	Not used (Open)
27	NC	—	Not used (Open)
28	GCP_TA0_OUT	O	FL GCP signal output
29	SYS_SO	O	Display serial data output
30	SYS_SI	I	Display serial data input
31	SYS_CLK	I	Display serial transfer clock input
32	NC	—	Not used (Open)
33	FL_DAT1	O	FL serial data-1 output
34	NC	—	Not used (Open)
35	FL_CLK_IN	I	FL serial transfer clock input (Connected to 5,100 pin)
36 to 38	NC	—	Not used (Open)
39	HOLD	I	External data bus (HOLD) input Fixed at “L”
39 to 43	NC	—	Not used (Open)
44	WRI/ER	I	External data bus (WRI/WR) input Fixed at “H”
45 to 59	NC	—	Not used (Open)
60	VCC2	—	Power supply (+3.3V)
61	NC	—	Not used (Open)
62	VSS	—	Ground
63 to 93	NC	—	Not used (Open)
94	AVSS	—	Ground
95	NC	—	Not used (Open)
96	VREF	I	Reference voltage input (Connected to AVCC)
97	AVCC	—	Power supply (+3.3V)
98	NC	—	Not used (Open)
99	FL_DAT2	O	FL serial data-2 output
100	FL_CLK_OUT	O	FL serial transfer clock output (Connected to 5,35 pin)

SECTION 5
EXPLODED VIEWS

NOTE:

- The mechanical parts with no reference number in the exploded views are not supplied.
- Items marked "*" are not stocked since they are seldom required for routine service. Some delay should be anticipated when ordering these items.
- -XX and -X mean standardized parts, so they may have some difference from the original one.
- Color Indication of Appearance Parts
  Example :
  KNOB, BALANCE (WHITE) ... (RED)
  ↑ Parts Color ↑ Cabinet's Color
- Accessories are given in the last of this parts list.
- Abbreviation
  CND : Canadian model

The components identified by mark ⚠ or dotted line with mark. ⚠ are critical for safety. Replace only with part number specified.

Les composants identifiés par une marque ⚠ sont critiques pour la sécurité. Ne les remplacer que par une piéce portant le numéro spécifié.

5-1. MAIN SECTION

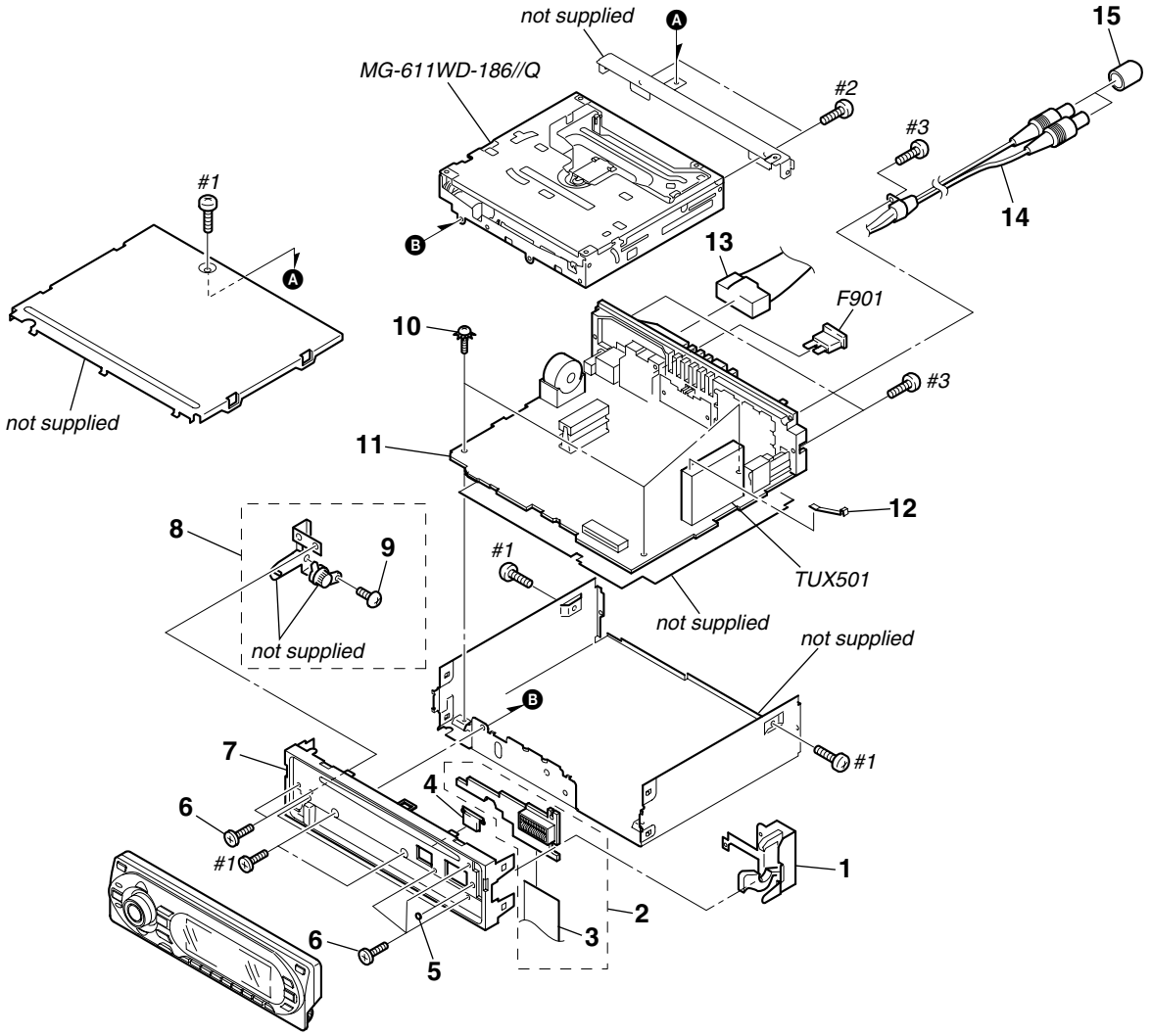

Ref. No.	Part No.	Description	Remark
1	X-3384-259-1	LOCK ASSY	
2	A-1159-160-A	SUB BOARD, COMPLETE	
3	1-831-502-11	CABLE, FLEXIBLE FLAT (22 CORE)	
4	3-246-441-01	BUTTON (EJECT)	
5	3-260-247-01	CUSHION (SUB PANEL)	
6	3-042-244-01	SCREW (T)	
7	X-2067-744-1	PANEL ASSY, SUB (FL)	
8	X-3384-203-1	GEAR ASSY	
9	3-713-786-51	SCREW +P 2X3	
10	3-376-464-11	SCREW (+PTT 2.6X6), GROUND POINT	
11	A-1159-115-A	MAIN BOARD, COMPLETE (GT700D)	
11	A-1159-877-A	MAIN BOARD, COMPLETE (GT705DX)	
12	2-021-848-01	SHEET (TU), GROUND	
13	1-776-207-72	CORD (WITH CONNECTOR) (POWER)	(EXCEPT AEP,UK)
13	1-776-527-71	CORD (WITH CONNECTOR) (ISO) (POWER)	(AEP,UK)
14	1-790-355-54	CORD (WITH CONNECTOR) (RCA)	(SUB OUT (MONO))
15	3-264-798-01	CAP	
F901	1-532-877-11	FUSE (BLADE TYPE) (AUTO FUSE) 10A	
TUX501	A-3220-961-B	TUNER UNIT (TUX-032)	
#1	7-685-792-09	SCREW +PTT 2.6X6 (S)	
#2	7-685-790-01	SCREW +PTT 2.6X4 (S)	
#3	7-685-793-09	SCREW +PTT 2.6X8 (S)	

5-2. FRONT PANEL SECTION

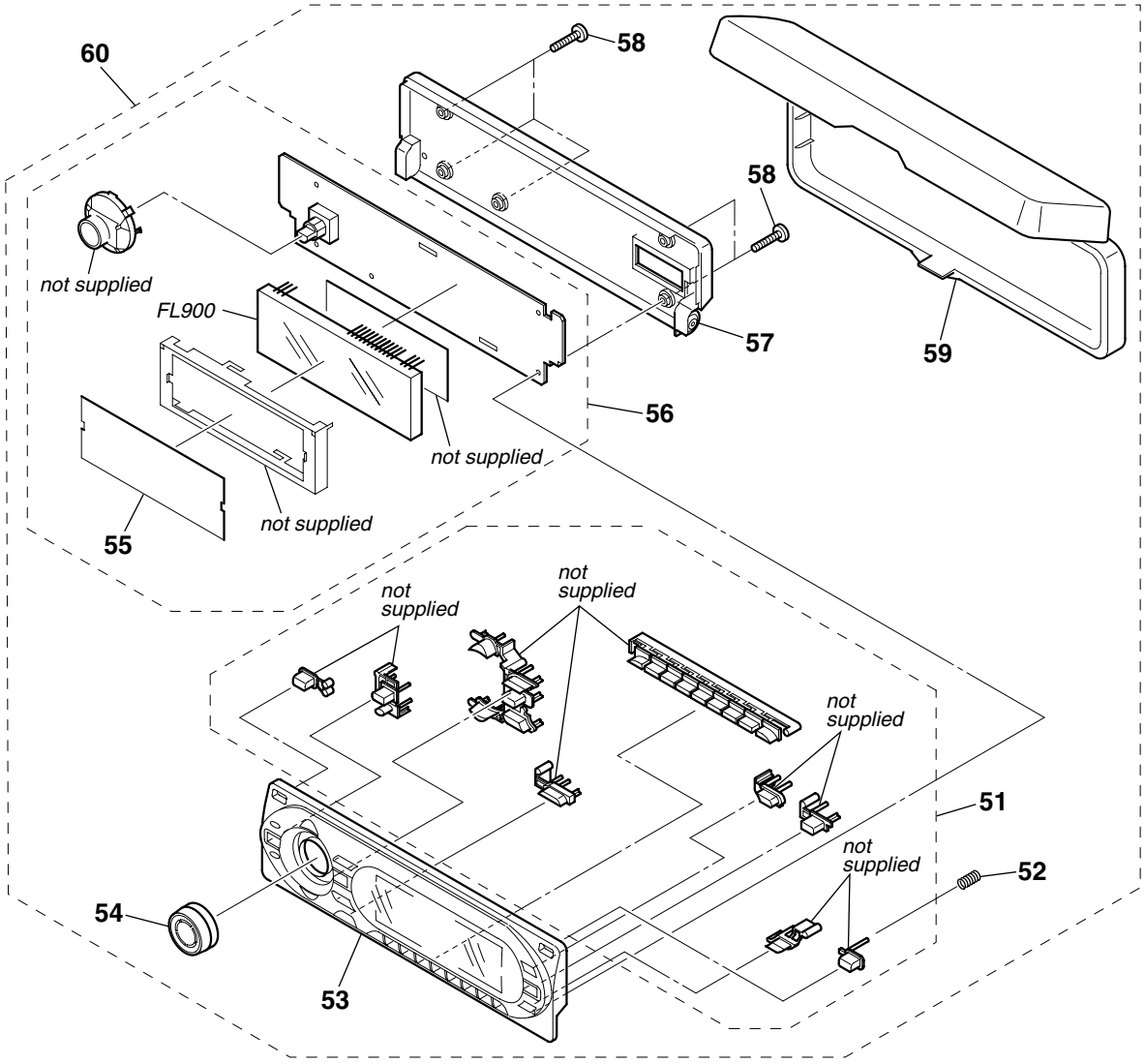

Ref. No.	Part No.	Description	Remark
51	X-2108-315-1	BUTTON ASSY (S)	
52	3-264-712-01	SPRING (OPEN)	
53	X-2108-314-1	PANEL (SV) ASSY, FRONT (GT700D)	
53	X-2108-317-1	PANEL (SV) ASSY, FRONT (GT705DX)	
54	X-2108-316-1	KNOB ASSY (S)	
55	2-189-846-01	FILTER (FL)	
56	A-1159-120-A	DISPLAY BOARD, COMPLETE	
57	X-2103-377-1	PANEL ASSY, FRONT BACK	
58	3-250-543-21	SCREW (+B P-TITE M2)	
59	X-2055-358-1	CASE ASSY (for FRONT PANEL)	
60	A-1159-118-A	PANEL OVERALL ASSY, FRONT (GT700D)	
60	A-1159-874-A	PANEL OVERALL ASSY, FRONT (GT705DX)	
FL900	1-519-842-11	VACUUM FLUORESCENT DISPLAY	

5-3. CD MECHANISM SECTION (1) (MG-611WD-186//Q)

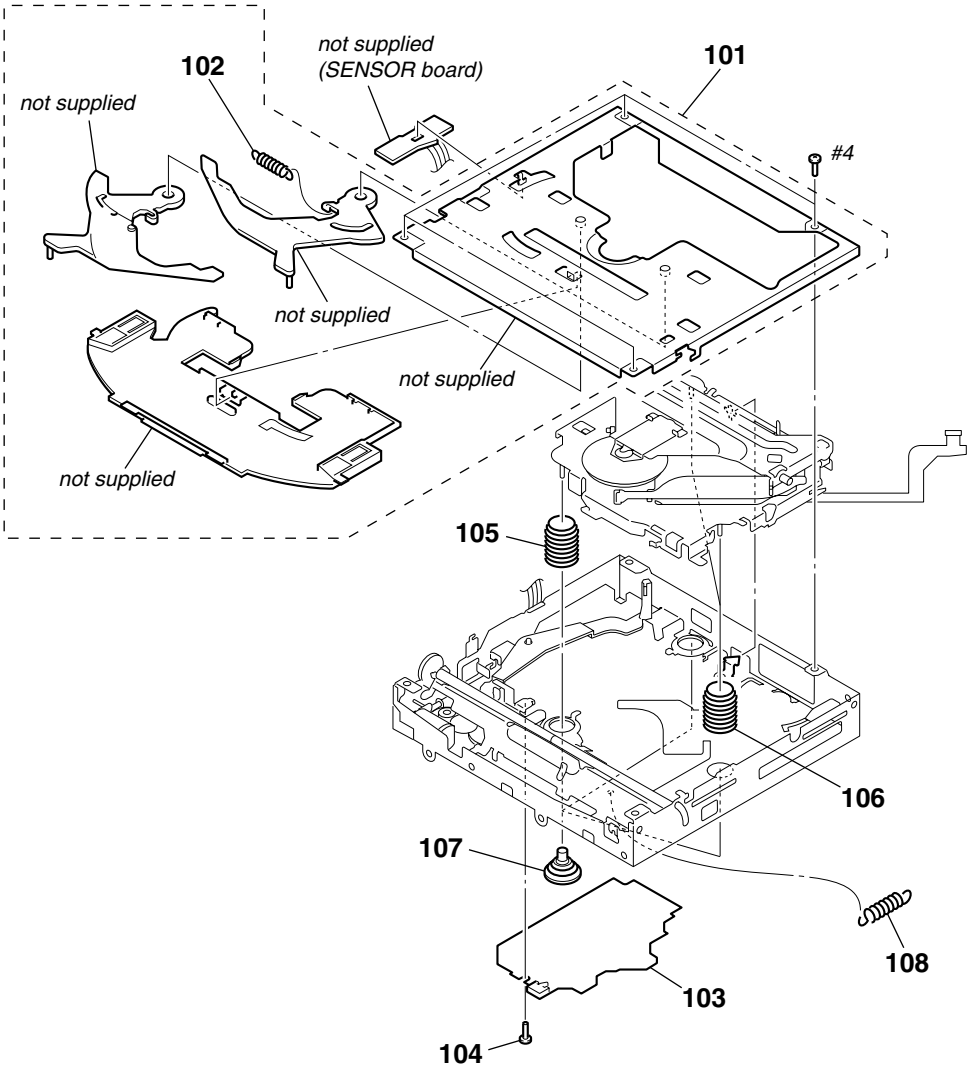

Ref. No.	Part No.	Description	Remark	Ref. No.	Part No.	Description	Remark
101	A-3372-444-C	CHASSIS (T) SUB ASSY		106	3-257-892-01	SPRING (DAMPER), COIL (NATURAL)	
102	3-253-729-11	SPRING (LR), TENSION COIL		107	3-259-033-01	DAMPER (S)	
103	A-1132-437-A	SERVO BOARD, COMPLETE		108	2-345-767-11	SPRING (KF60), TENSION	
104	2-587-505-01	SCREW		#4	7-627-552-87	SCREW, PRECISION +P 1.7X2.2	
105	3-257-892-12	SPRING (DAMPER), COIL (GREEN)					

5-4. CD MECHANISM SECTION (2) (MG-611WD-186//Q)

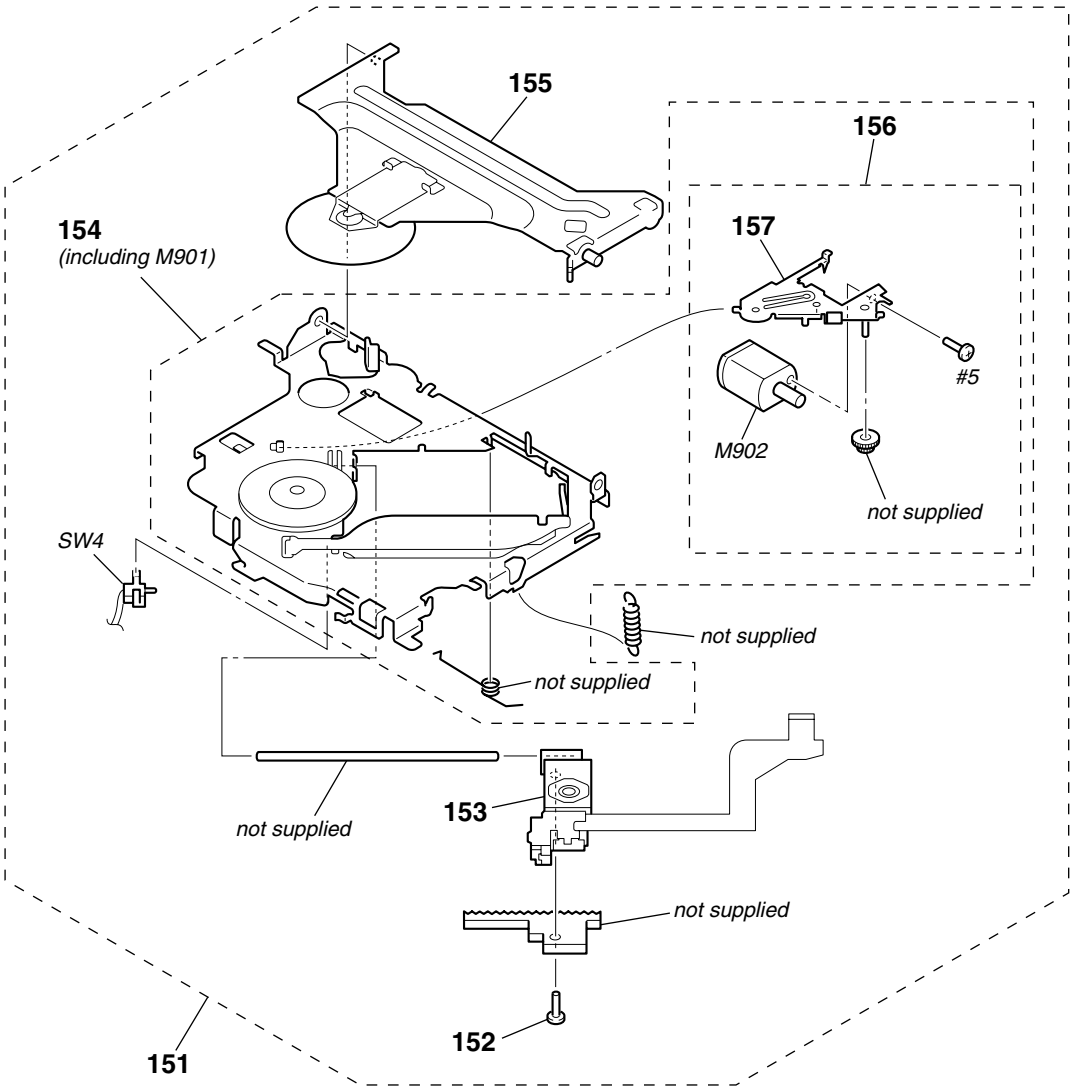

Ref. No.	Part No.	Description	Remark	Ref. No.	Part No.	Description	Remark
151	A-1075-644-A	CHASSIS (OP) COMPLETE ASSY		156	A-3372-446-A	LEVER (SL) SUB ASSY	
152	3-316-938-91	SCREW (B1.4X5), TAPPING		157	X-3384-090-3	LEVER (SL) ASSY	
⚠153	8-820-207-12	OPTICAL PICK-UP (KSS1000E/K1RP)		M902	A-3372-447-A	MOTOR ASSY, SL (SLED)	
154	A-1075-645-A	CHASSIS (OP) SUB ASSY (including M901)		SW4	1-571-099-11	SWITCH (1 KEY) (LIMIT)	
155	A-3372-449-A	ARM SUB ASSY, CHUCKING		#5	7-627-850-77	SCREW, PRECISION +P 1.4X1.8	

5-5. CD MECHANISM SECTION (3) (MG-611WD-186//Q)

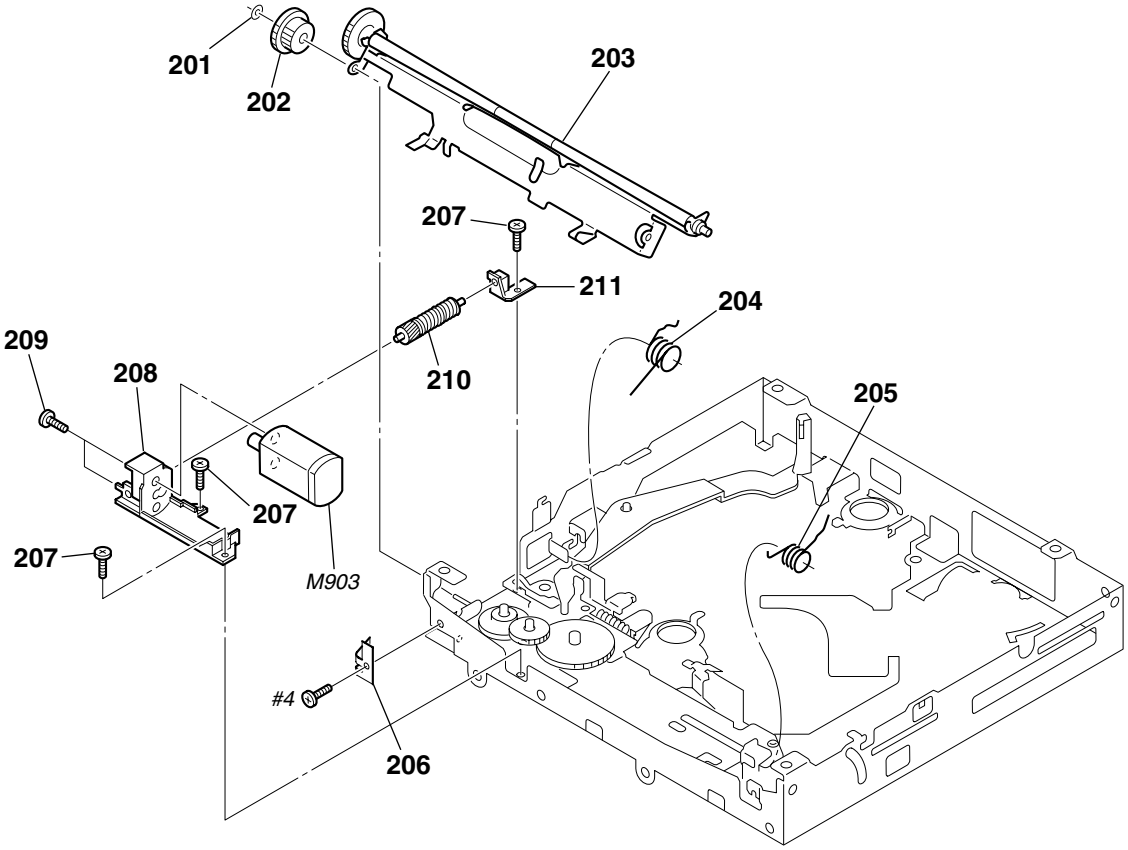

Ref. No.	Part No.	Description	Remark
201	3-348-993-01	WASHER	
202	2-186-699-01	GEAR (RA1)	
203	A-1075-641-C	ARM ASSY, ROLLER	
204	2-635-295-01	SPRING (RAL-B)	
205	2-635-296-01	SPRING (RAR-B)	
206	3-259-469-12	SPRING (LE), LEAF	
207	2-134-636-21	SCREW (M1.7X2.5)	
208	2-186-696-02	BRACKET (LEM-N)	
209	3-345-648-91	SCREW (M1.4), TOOTHED LOCK	
210	A-1083-636-A	GEAR (LE) ASSY	
211	2-186-697-01	BEARING (LEB-N)	
M903	A-1166-300-A	MOTOR ASSY (B), LE (LOADING)	
#4	7-627-552-87	SCREW, PRECISION +P 1.7X2.2	

5-6. CD MECHANISM SECTION (4) (MG-611WD-186//Q)

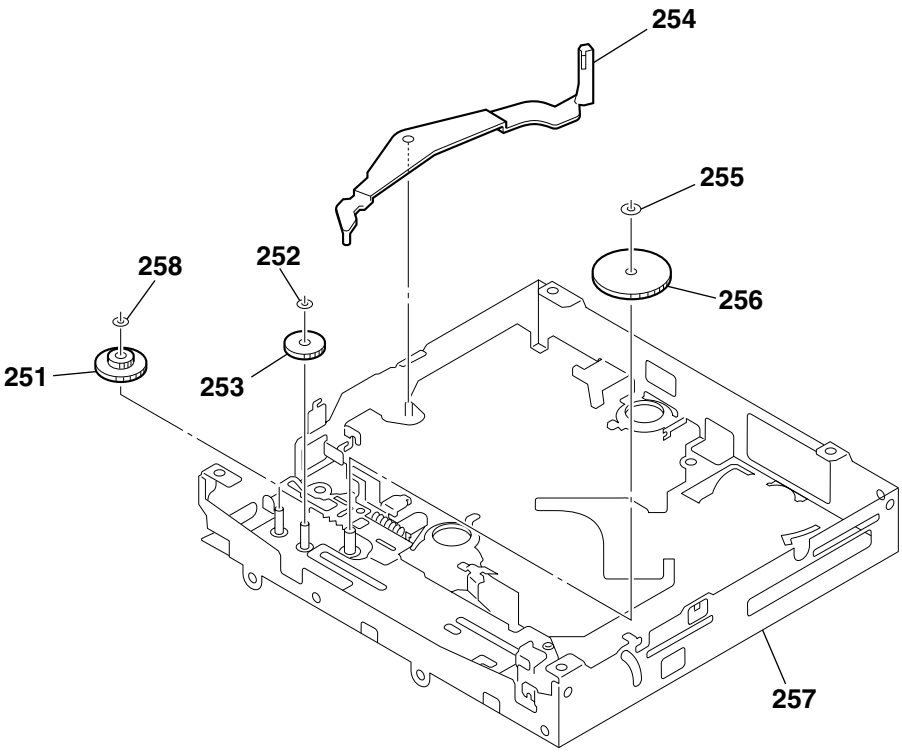

Ref. No.	Part No.	Description	Remark	Ref. No.	Part No.	Description	Remark
251	2-186-700-01	GEAR (CHK1)		255	2-630-962-01	WASHER (SLIT)	
252	3-344-223-01	WASHER		* 256	2-590-545-01	GEAR (LE2-M)	
253	3-259-470-12	GEAR (LE1)		257	A-1075-640-B	CHASSIS (M) BLOCK ASSY	
254	3-253-755-41	LEVER (D)		258	3-348-993-01	WASHER	

DISPLAY

SECTION 6
ELECTRICAL PARTS LIST

NOTE:

- Due to standardization, replacements in the parts list may be different from the parts specified in the diagrams or the components used on the set.
- -XX and -X mean standardized parts, so they may have some difference from the original one.
- RESISTORS
  All resistors are in ohms.
  METAL:Metal-film resistor.
  METAL OXIDE: Metal oxide-film resistor.
  F:nonflammable
- Abbreviation
  CND : Canadian model
- Items marked "*" are not stocked since they are seldom required for routine service. Some delay should be anticipated when ordering these items.
- SEMICONDUCTORS
  In each case, u : µ, for example:
  uA.. : µA.. uPA.. : µPA..
  uPB.. : µPB.. uPC.. : µPC.. uPD.. : µPD..
- CAPACITORS
  uF : µF
- COILS
  uH : µH

The components identified by mark ⚠ or dotted line with mark. ⚠ are critical for safety. Replace only with part number specified.

Les composants identifiés par une marque ⚠ sont critiques pour la sécurité. Ne les remplacer que par une piéce portant le numéro spécifié.

When indicating parts by reference number, please include the board.

Ref. No.	Part No.	Description			Remark
	A-1159-120-A	DISPLAY BOARD, COMPLETE			
		**********			
	2-189-846-01	FILTER (FL)			
		< CAPACITOR >			
C901	1-107-826-11	CERAMIC CHIP	0.1uF	10%	16V
C902	1-107-826-11	CERAMIC CHIP	0.1uF	10%	16V
C903	1-107-826-11	CERAMIC CHIP	0.1uF	10%	16V
C905	1-107-826-11	CERAMIC CHIP	0.1uF	10%	16V
C915	1-107-826-11	CERAMIC CHIP	0.1uF	10%	16V
C919	1-107-826-11	CERAMIC CHIP	0.1uF	10%	16V
C920	1-107-826-11	CERAMIC CHIP	0.1uF	10%	16V
C921	1-100-758-11	CERAMIC CHIP	0.047uF	10%	250V
C925	1-107-826-11	CERAMIC CHIP	0.1uF	10%	16V
C926	1-107-826-11	CERAMIC CHIP	0.1uF	10%	16V
C927	1-107-826-11	CERAMIC CHIP	0.1uF	10%	16V
C928	1-107-826-11	CERAMIC CHIP	0.1uF	10%	16V
C929	1-107-826-11	CERAMIC CHIP	0.1uF	10%	16V
		< CONNECTOR >			
CN902	1-818-141-11	PLUG, CONNECTOR 20P			
		< DIODE >			
D901	6-500-886-01	DIODE RSA6.1ENTR			
D902	6-500-886-01	DIODE RSA6.1ENTR			
D904	6-501-193-01	DIODE 1SS355WTE-17			
D907	6-501-170-01	DIODE UDZW-TE17-6.8B			
D908	6-501-170-01	DIODE UDZW-TE17-6.8B			
D912	1-216-295-11	SHORT CHIP	0		
D920	6-501-170-01	DIODE UDZW-TE17-6.8B			
		< RESISTOR >			
FB901	1-216-809-11	METAL CHIP	100	5%	1/10W
FB902	1-216-809-11	METAL CHIP	100	5%	1/10W
FB903	1-216-809-11	METAL CHIP	100	5%	1/10W
FB904	1-216-864-11	SHORT CHIP	0		
FB905	1-216-809-11	METAL CHIP	100	5%	1/10W
FB908	1-216-809-11	METAL CHIP	100	5%	1/10W
FB911	1-216-864-11	SHORT CHIP	0		
FB912	1-216-809-11	METAL CHIP	100	5%	1/10W
FB913	1-216-809-11	METAL CHIP	100	5%	1/10W
FB914	1-216-809-11	METAL CHIP	100	5%	1/10W
FB915	1-216-809-11	METAL CHIP	100	5%	1/10W
FB916	1-216-809-11	METAL CHIP	100	5%	1/10W
FB917	1-216-864-11	SHORT CHIP	0		
FB918	1-216-864-11	SHORT CHIP	0		
FB919	1-216-864-11	SHORT CHIP	0		
FB920	1-216-809-11	METAL CHIP	100	5%	1/10W
FB921	1-216-809-11	METAL CHIP	100	5%	1/10W
		< VACUUM FLUORESCENT DISPLAY >			
FL900	1-519-842-11	VACUUM FLUORESCENT DISPLAY			
		< IC >			
IC901	6-806-247-01	IC M30876MJB-054GP			
IC903	6-600-163-01	IC RS-770 (IR)			
IC904	8-759-659-13	IC PST3428UL			
		< JUMPER RESISTOR >			
JC902	1-216-864-11	SHORT CHIP	0		
		< DIODE >			
LED911	6-500-476-01	LED SML310BA1TT86 (MENU)			
LED912	6-500-476-01	LED SML310BA1TT86 (▶▶ ▶▶I/SEEK +)			
LED913	6-500-476-01	LED SML310BA1TT86 (VOL ILLUMINATION)			
LED914	6-500-476-01	LED SML310BA1TT86 (VOL ILLUMINATION)			
LED915	6-500-476-01	LED SML310BA1TT86 (VOL ILLUMINATION)			
LED916	6-500-476-01	LED SML310BA1TT86 (VOL ILLUMINATION)			
LED917	6-500-476-01	LED SML310BA1TT86 (ENTER)			
LED918	6-500-476-01	LED SML310BA1TT86 (I◀◀ ◀◀/SEEK –)			
LED919	6-500-476-01	LED SML310BA1TT86 (DSPL/PTY) (GT700D)			
LED919	6-500-476-01	LED SML310BA1TT86 (DSPL) (GT705DX)			
LED920	6-500-476-01	LED SML310BA1TT86 (BBE/BBE MP)			
LED921	6-500-476-01	LED SML310BA1TT86 (OPEN)			
LED923	6-500-476-01	LED SML310BA1TT86 (SOURCE)			
LED924	6-500-476-01	LED SML310BA1TT86 (IMAGE)			
LED925	6-500-476-01	LED SML310BA1TT86 (HDEQ)			
		< SWITCH >			
LSW903	1-786-802-11	SWITCH, TACTILE (WITH LED) (AF/TA) (GT700D)			
LSW903	1-786-802-11	SWITCH, TACTILE (WITH LED) (SCRL) (GT705DX)			
LSW904	1-786-802-11	SWITCH, TACTILE (WITH LED) (6/PAUSE)			
LSW905	1-786-802-11	SWITCH, TACTILE (WITH LED) (5)			
LSW906	1-786-802-11	SWITCH, TACTILE (WITH LED) (4)			
LSW907	1-786-802-11	SWITCH, TACTILE (WITH LED) (3)			

Ref. No.	Part No.	Description			Remark
LSW908	1-786-802-11	SWITCH, TACTILE (WITH LED) (2/SHUF)			
LSW909	1-786-802-11	SWITCH, TACTILE (WITH LED) (1/REP)			
LSW910	1-786-802-11	SWITCH, TACTILE (WITH LED) (OFF)			
LSW911	1-786-802-11	SWITCH, TACTILE (WITH LED) (GP/ALBM –)			
LSW912	1-786-802-11	SWITCH, TACTILE (WITH LED) (GP/ALBM +)			
LSW913	1-786-802-11	SWITCH, TACTILE (WITH LED) (MODE)			
		< RESISTOR >			
R901	1-218-843-11	METAL CHIP	680	0.5%	1/10W
R902	1-218-843-11	METAL CHIP	680	0.5%	1/10W
R903	1-218-843-11	METAL CHIP	680	0.5%	1/10W
R904	1-218-847-11	METAL CHIP	1K	0.5%	1/10W
R905	1-218-851-11	METAL CHIP	1.5K	0.5%	1/10W
R906	1-218-851-11	METAL CHIP	1.5K	0.5%	1/10W
R907	1-218-855-11	METAL CHIP	2.2K	0.5%	1/10W
R908	1-218-859-11	METAL CHIP	3.3K	0.5%	1/10W
R909	1-218-863-11	METAL CHIP	4.7K	0.5%	1/10W
R910	1-218-867-11	METAL CHIP	6.8K	0.5%	1/10W
R912	1-218-843-11	METAL CHIP	680	0.5%	1/10W
R913	1-218-843-11	METAL CHIP	680	0.5%	1/10W
R914	1-218-843-11	METAL CHIP	680	0.5%	1/10W
R915	1-218-847-11	METAL CHIP	1K	0.5%	1/10W
R916	1-218-851-11	METAL CHIP	1.5K	0.5%	1/10W
R917	1-218-851-11	METAL CHIP	1.5K	0.5%	1/10W
R918	1-218-855-11	METAL CHIP	2.2K	0.5%	1/10W
R919	1-218-859-11	METAL CHIP	3.3K	0.5%	1/10W
R920	1-218-863-11	METAL CHIP	4.7K	0.5%	1/10W
R921	1-218-867-11	METAL CHIP	6.8K	0.5%	1/10W
R925	1-216-812-11	METAL CHIP	180	5%	1/10W
R926	1-216-821-11	METAL CHIP	1K	5%	1/10W
R927	1-216-821-11	METAL CHIP	1K	5%	1/10W
R928	1-216-821-11	METAL CHIP	1K	5%	1/10W
R929	1-216-821-11	METAL CHIP	1K	5%	1/10W
R930	1-216-812-11	METAL CHIP	180	5%	1/10W
R931	1-216-812-11	METAL CHIP	180	5%	1/10W
R932	1-216-812-11	METAL CHIP	180	5%	1/10W
R933	1-216-821-11	METAL CHIP	1K	5%	1/10W
R934	1-216-821-11	METAL CHIP	1K	5%	1/10W
R935	1-216-821-11	METAL CHIP	1K	5%	1/10W
R936	1-216-821-11	METAL CHIP	1K	5%	1/10W
R937	1-216-812-11	METAL CHIP	180	5%	1/10W
R938	1-216-812-11	METAL CHIP	180	5%	1/10W
R939	1-216-812-11	METAL CHIP	180	5%	1/10W
R940	1-216-812-11	METAL CHIP	180	5%	1/10W
R941	1-216-812-11	METAL CHIP	180	5%	1/10W
R942	1-216-812-11	METAL CHIP	180	5%	1/10W
R943	1-216-821-11	METAL CHIP	1K	5%	1/10W
R944	1-216-821-11	METAL CHIP	1K	5%	1/10W
R948	1-216-864-11	SHORT CHIP	0		
R950	1-216-825-11	METAL CHIP	2.2K	5%	1/10W
R951	1-216-845-11	METAL CHIP	100K	5%	1/10W
R952	1-216-845-11	METAL CHIP	100K	5%	1/10W
R953	1-216-845-11	METAL CHIP	100K	5%	1/10W
R954	1-216-833-11	METAL CHIP	10K	5%	1/10W
R955	1-216-833-11	METAL CHIP	10K	5%	1/10W
R956	1-216-809-11	METAL CHIP	100	5%	1/10W
R958	1-216-825-11	METAL CHIP	2.2K	5%	1/10W
R959	1-216-845-11	METAL CHIP	100K	5%	1/10W
R960	1-216-845-11	METAL CHIP	100K	5%	1/10W
R961	1-216-845-11	METAL CHIP	100K	5%	1/10W
R962	1-216-845-11	METAL CHIP	100K	5%	1/10W
R963	1-216-017-11	RES-CHIP	47	5%	1/10W
R964	1-216-017-11	RES-CHIP	47	5%	1/10W
R970	1-216-845-11	METAL CHIP	100K	5%	1/10W
R971	1-216-864-11	SHORT CHIP	0		
R974	1-216-864-11	SHORT CHIP	0		
R981	1-216-864-11	SHORT CHIP	0		
R982	1-216-821-11	METAL CHIP	1K	5%	1/10W
		< SWITCH >			
S902	1-786-653-11	SWITCH, TACTILE (IMAGE)			
S903	1-786-653-11	SWITCH, TACTILE (SOURCE)			
S904	1-786-653-11	SWITCH, TACTILE (DSPL/PTY) (GT700D)			
S904	1-786-653-11	SWITCH, TACTILE (DSPL) (GT705DX)			
S905	1-786-653-11	SWITCH, TACTILE (⏮ ◀◀/SEEK –)			
S906	1-479-481-11	ENCODER, ROTARY (VOL/PUSH SOUND)			
S907	1-786-653-11	SWITCH, TACTILE (MENU)			
S908	1-786-653-11	SWITCH, TACTILE (▶▶ ⏭/SEEK +)			
S909	1-786-653-11	SWITCH, TACTILE (ENTER)			
S910	1-786-653-11	SWITCH, TACTILE (BBE/BBE MP)			
S911	1-786-653-11	SWITCH, TACTILE (HDEQ)			
		< VIBRATOR >			
X901	1-813-522-21	VIBRATOR, CERAMIC (6.75MHz)			

****

	A-1159-115-A	MAIN BOARD, COMPLETE (GT700D)			
	A-1159-877-A	MAIN BOARD, COMPLETE (GT705DX)			
		**********			
	7-621-284-40	SCREW +P 2.6X10			
	7-685-134-19	SCREW +P 2.6X8 TYPE2 NON-SLIT			
	7-685-794-09	SCREW +PTT 2.6X10 (S)			
	7-685-795-09	SCREW +PTT 2.6X12 (S)			
		< CAPACITOR >			
C101	1-126-940-11	ELECT	330uF	20%	25V
C102	1-126-960-11	ELECT	1uF	20%	50V
C103	1-112-839-11	ELECT	4700uF		50V
C107	1-107-826-11	CERAMIC CHIP	0.1uF	10%	16V
C110	1-162-970-11	CERAMIC CHIP	0.01uF	10%	25V
C111	1-162-970-11	CERAMIC CHIP	0.01uF	10%	25V
C112	1-162-964-11	CERAMIC CHIP	0.001uF	10%	50V
C142	1-162-927-11	CERAMIC CHIP	100PF	5%	50V
C172	1-124-717-85	ELECT	1uF	20%	50V
C173	1-124-721-85	ELECT	10uF	20%	50V
C178	1-162-927-11	CERAMIC CHIP	100PF	5%	50V
C182	1-124-717-85	ELECT	1uF	20%	50V
C183	1-124-721-85	ELECT	10uF	20%	50V
C188	1-162-927-11	CERAMIC CHIP	100PF	5%	50V
C201	1-164-489-11	CERAMIC CHIP	0.22uF	10%	16V
C202	1-162-923-11	CERAMIC CHIP	47PF	5%	50V
C203	1-126-961-11	ELECT	2.2uF	20%	50V
C204	1-124-695-85	ELECT	22uF	20%	25V
C205	1-115-340-11	CERAMIC CHIP	0.22uF	10%	25V
C206	1-165-908-11	CERAMIC CHIP	1uF	10%	10V
C207	1-165-908-11	CERAMIC CHIP	1uF	10%	10V

MAIN

Ref. No.	Part No.	Description			Remark
C208	1-162-966-11	CERAMIC CHIP	0.0022uF	10%	50V
C209	1-162-966-11	CERAMIC CHIP	0.0022uF	10%	50V
C210	1-115-340-11	CERAMIC CHIP	0.22uF	10%	25V
C211	1-165-908-11	CERAMIC CHIP	1uF	10%	10V
C212	1-126-934-11	ELECT	220uF	20%	16V
C214	1-126-964-11	ELECT	10uF	20%	50V
C215	1-115-340-11	CERAMIC CHIP	0.22uF	10%	25V
C216	1-162-966-11	CERAMIC CHIP	0.0022uF	10%	50V
C217	1-162-966-11	CERAMIC CHIP	0.0022uF	10%	50V
C218	1-165-908-11	CERAMIC CHIP	1uF	10%	10V
C219	1-165-908-11	CERAMIC CHIP	1uF	10%	10V
C221	1-126-933-11	ELECT	100uF	20%	16V
C223	1-126-964-11	ELECT	10uF	20%	50V
C225	1-165-908-11	CERAMIC CHIP	1uF	10%	10V
C226	1-126-934-11	ELECT	220uF	20%	16V
C227	1-115-340-11	CERAMIC CHIP	0.22uF	10%	25V
C228	1-115-340-11	CERAMIC CHIP	0.22uF	10%	25V
C229	1-115-340-11	CERAMIC CHIP	0.22uF	10%	25V
C231	1-162-970-11	CERAMIC CHIP	0.01uF	10%	25V
C232	1-107-826-11	CERAMIC CHIP	0.1uF	10%	16V
C236	1-165-908-11	CERAMIC CHIP	1uF	10%	10V
C237	1-165-908-11	CERAMIC CHIP	1uF	10%	10V
C238	1-165-908-11	CERAMIC CHIP	1uF	10%	10V
C239	1-165-908-11	CERAMIC CHIP	1uF	10%	10V
C242	1-162-927-11	CERAMIC CHIP	100PF	5%	50V
C272	1-124-717-85	ELECT	1uF	20%	50V
C273	1-124-721-85	ELECT	10uF	20%	50V
C278	1-162-927-11	CERAMIC CHIP	100PF	5%	50V
C282	1-124-717-85	ELECT	1uF	20%	50V
C283	1-124-721-85	ELECT	10uF	20%	50V
C288	1-162-927-11	CERAMIC CHIP	100PF	5%	50V
C301	1-126-933-11	ELECT	100uF	20%	16V
C302	1-107-826-11	CERAMIC CHIP	0.1uF	10%	16V
C303	1-126-933-11	ELECT	100uF	20%	16V
C304	1-107-826-11	CERAMIC CHIP	0.1uF	10%	16V
C305	1-126-933-11	ELECT	100uF	20%	16V
C306	1-107-826-11	CERAMIC CHIP	0.1uF	10%	16V
C311	1-126-916-11	ELECT	1000uF	20%	6.3V
C313	1-107-826-11	CERAMIC CHIP	0.1uF	10%	16V
C315	1-162-917-11	CERAMIC CHIP	15PF	5%	50V
C316	1-162-917-11	CERAMIC CHIP	15PF	5%	50V
C317	1-165-908-11	CERAMIC CHIP	1uF	10%	10V
C318	1-162-970-11	CERAMIC CHIP	0.01uF	10%	25V
C321	1-124-635-00	ELECT	220uF	20%	6.3V
C322	1-162-919-11	CERAMIC CHIP	22PF	5%	50V
C323	1-162-919-11	CERAMIC CHIP	22PF	5%	50V
C326	1-126-924-11	ELECT	330uF	20%	10V
C327	1-162-970-11	CERAMIC CHIP	0.01uF	10%	25V
C328	1-162-970-11	CERAMIC CHIP	0.01uF	10%	25V
C331	1-162-970-11	CERAMIC CHIP	0.01uF	10%	25V
C332	1-107-826-11	CERAMIC CHIP	0.1uF	10%	16V
C333	1-126-933-11	ELECT	100uF	20%	16V
C334	1-107-826-11	CERAMIC CHIP	0.1uF	10%	16V
C340	1-126-947-11	ELECT	47uF	20%	35V
C341	1-162-970-11	CERAMIC CHIP	0.01uF	10%	25V
C342	1-162-970-11	CERAMIC CHIP	0.01uF	10%	25V
C400	1-124-717-85	ELECT	1uF	20%	50V
C401	1-126-947-11	ELECT	47uF	20%	35V
C403	1-126-962-11	ELECT	3.3uF	20%	50V
C408	1-117-863-11	CERAMIC CHIP	0.47uF	10%	6.3V
C409	1-117-863-11	CERAMIC CHIP	0.47uF	10%	6.3V
C410	1-124-721-85	ELECT	10uF	20%	50V
C411	1-165-908-11	CERAMIC CHIP	1uF	10%	10V
C412	1-165-908-11	CERAMIC CHIP	1uF	10%	10V
C417	1-117-863-11	CERAMIC CHIP	0.47uF	10%	6.3V
C418	1-117-863-11	CERAMIC CHIP	0.47uF	10%	6.3V
C419	1-117-863-11	CERAMIC CHIP	0.47uF	10%	6.3V
C420	1-117-863-11	CERAMIC CHIP	0.47uF	10%	6.3V
C421	1-162-964-11	CERAMIC CHIP	0.001uF	10%	50V
C422	1-162-964-11	CERAMIC CHIP	0.001uF	10%	50V
C423	1-162-964-11	CERAMIC CHIP	0.001uF	10%	50V
C424	1-162-964-11	CERAMIC CHIP	0.001uF	10%	50V
C430	1-126-964-11	ELECT	10uF	20%	50V
C431	1-107-826-11	CERAMIC CHIP	0.1uF	10%	16V
C433	1-107-826-11	CERAMIC CHIP	0.1uF	10%	16V
C434	1-124-673-85	ELECT	100uF	20%	10V
C436	1-107-826-11	CERAMIC CHIP	0.1uF	10%	16V
C437	1-126-934-11	ELECT	220uF	20%	16V
C438	1-162-965-11	CERAMIC CHIP	0.0015uF	10%	50V
C439	1-162-965-11	CERAMIC CHIP	0.0015uF	10%	50V
C440	1-126-934-11	ELECT	220uF	20%	16V
C441	1-124-673-85	ELECT	100uF	20%	10V
C442	1-162-927-11	CERAMIC CHIP	100PF	5%	50V
C443	1-126-964-11	ELECT	10uF	20%	50V
C455	1-162-966-11	CERAMIC CHIP	0.0022uF	10%	50V
C456	1-162-966-11	CERAMIC CHIP	0.0022uF	10%	50V
C457	1-162-966-11	CERAMIC CHIP	0.0022uF	10%	50V
C458	1-162-966-11	CERAMIC CHIP	0.0022uF	10%	50V
C459	1-162-966-11	CERAMIC CHIP	0.0022uF	10%	50V
C469	1-162-964-11	CERAMIC CHIP	0.001uF	10%	50V
C470	1-164-174-11	CERAMIC CHIP	0.0082uF	10%	25V
C471	1-164-174-11	CERAMIC CHIP	0.0082uF	10%	25V
C472	1-164-174-11	CERAMIC CHIP	0.0082uF	10%	25V
C473	1-164-174-11	CERAMIC CHIP	0.0082uF	10%	25V
C474	1-162-964-11	CERAMIC CHIP	0.001uF	10%	50V
C475	1-107-826-11	CERAMIC CHIP	0.1uF	10%	16V
C476	1-162-964-11	CERAMIC CHIP	0.001uF	10%	50V
C477	1-162-964-11	CERAMIC CHIP	0.001uF	10%	50V
C478	1-107-826-11	CERAMIC CHIP	0.1uF	10%	16V
C479	1-216-864-11	SHORT CHIP	0		
C480	1-216-864-11	SHORT CHIP	0		
C481	1-216-864-11	SHORT CHIP	0		
C482	1-216-864-11	SHORT CHIP	0		
C491	1-162-964-11	CERAMIC CHIP	0.001uF	10%	50V
C501	1-162-970-11	CERAMIC CHIP	0.01uF	10%	25V
C502	1-126-964-11	ELECT	10uF	20%	50V
C503	1-126-963-11	ELECT	4.7uF	20%	50V (GT700D)
C505	1-162-964-11	CERAMIC CHIP	0.001uF	10%	50V (GT700D)
C509	1-162-970-11	CERAMIC CHIP	0.01uF	10%	25V
C510	1-162-970-11	CERAMIC CHIP	0.01uF	10%	25V
C513	1-126-933-11	ELECT	100uF	20%	16V
C514	1-107-826-11	CERAMIC CHIP	0.1uF	10%	16V (GT705DX)
C520	1-107-725-11	CERAMIC CHIP	0.1uF	10%	16V

Ref. No.	Part No.	Description			Remark
C544	1-162-970-11	CERAMIC CHIP	0.01uF	10%	25V
C551	1-126-947-11	ELECT	47uF	20%	35V (GT700D)
C552	1-162-970-11	CERAMIC CHIP	0.01uF	10%	25V (GT700D)
C553	1-107-826-11	CERAMIC CHIP	0.1uF	10%	16V (GT700D)
C554	1-107-826-11	CERAMIC CHIP	0.1uF	10%	16V (GT700D)
C555	1-107-826-11	CERAMIC CHIP	0.1uF	10%	16V (GT700D)
C556	1-107-826-11	CERAMIC CHIP	0.1uF	10%	16V (GT700D)
C557	1-107-826-11	CERAMIC CHIP	0.1uF	10%	16V (GT700D)
C558	1-107-826-11	CERAMIC CHIP	0.1uF	10%	16V (GT700D)
C559	1-162-917-11	CERAMIC CHIP	15PF	5%	50V (GT700D)
C560	1-162-917-11	CERAMIC CHIP	15PF	5%	50V (GT700D)
C561	1-162-959-11	CERAMIC CHIP	330PF	5%	50V (GT700D)
C620	1-104-665-11	ELECT	100uF	20%	25V
C621	1-128-552-11	ELECT	47uF	20%	63V
C622	1-126-934-11	ELECT	220uF	20%	16V
C623	1-126-964-11	ELECT	10uF	20%	50V
C624	1-164-315-11	CERAMIC CHIP	470PF	5%	50V
C625	1-162-966-11	CERAMIC CHIP	0.0022uF	10%	50V
C626	1-164-004-11	CERAMIC CHIP	0.1uF	10%	25V
C628	1-107-826-11	CERAMIC CHIP	0.1uF	10%	16V
C629	1-126-933-11	ELECT	100uF	20%	16V
C633	1-107-826-11	CERAMIC CHIP	0.1uF	10%	16V
C651	1-126-933-11	ELECT	100uF	20%	16V
C652	1-126-963-11	ELECT	4.7uF	20%	50V
C653	1-107-826-11	CERAMIC CHIP	0.1uF	10%	16V
C654	1-162-969-11	CERAMIC CHIP	0.0068uF	10%	25V
C655	1-126-933-11	ELECT	100uF	20%	16V
C656	1-126-934-11	ELECT	220uF	20%	16V
C802	1-162-967-11	CERAMIC CHIP	0.0033uF	10%	50V
C811	1-104-951-11	ELECT	10uF	20%	16V
C812	1-104-951-11	ELECT	10uF	20%	16V
C813	1-104-951-11	ELECT	10uF	20%	16V
C814	1-104-951-11	ELECT	10uF	20%	16V
C815	1-104-951-11	ELECT	10uF	20%	16V
C816	1-104-951-11	ELECT	10uF	20%	16V
C817	1-104-951-11	ELECT	10uF	20%	16V
C820	1-216-864-11	SHORT CHIP	0		
C822	1-162-964-11	CERAMIC CHIP	0.001uF	10%	50V
C850	1-107-826-11	CERAMIC CHIP	0.1uF	10%	16V
C851	1-107-826-11	CERAMIC CHIP	0.1uF	10%	16V
C852	1-107-826-11	CERAMIC CHIP	0.1uF	10%	16V
C853	1-107-826-11	CERAMIC CHIP	0.1uF	10%	16V
C854	1-124-224-61	ELECT	47uF	20%	6.3V
C855	1-124-224-61	ELECT	47uF	20%	6.3V
C856	1-107-826-11	CERAMIC CHIP	0.1uF	10%	16V
C857	1-124-224-61	ELECT	47uF	20%	6.3V
C858	1-107-826-11	CERAMIC CHIP	0.1uF	10%	16V
C859	1-107-826-11	CERAMIC CHIP	0.1uF	10%	16V
C860	1-107-826-11	CERAMIC CHIP	0.1uF	10%	16V
C861	1-107-826-11	CERAMIC CHIP	0.1uF	10%	16V
C862	1-107-826-11	CERAMIC CHIP	0.1uF	10%	16V
C863	1-124-224-61	ELECT	47uF	20%	6.3V
C864	1-124-224-61	ELECT	47uF	20%	6.3V
C865	1-124-224-61	ELECT	47uF	20%	6.3V
C866	1-107-826-11	CERAMIC CHIP	0.1uF	10%	16V
C867	1-107-826-11	CERAMIC CHIP	0.1uF	10%	16V
C868	1-107-826-11	CERAMIC CHIP	0.1uF	10%	16V
C869	1-124-224-61	ELECT	47uF	20%	6.3V
C870	1-124-224-61	ELECT	47uF	20%	6.3V
C871	1-124-224-61	ELECT	47uF	20%	6.3V
C872	1-107-826-11	CERAMIC CHIP	0.1uF	10%	16V
C881	1-135-820-21	FILM CHIP	0.001uF	2%	50V
C882	1-127-956-21	FILM CHIP	0.1uF	5%	16V
C883	1-162-964-11	CERAMIC CHIP	0.001uF	10%	50V
C884	1-107-826-11	CERAMIC CHIP	0.1uF	10%	16V
C885	1-126-163-11	ELECT	4.7uF	20%	50V
C886	1-107-826-11	CERAMIC CHIP	0.1uF	10%	16V
C903	1-126-963-11	ELECT	4.7uF	20%	50V
		< CONNECTOR >			
* CN401	1-564-506-11	PLUG, CONNECTOR 3P			
CN701	1-569-915-11	SOCKET, CONNECTOR 22P			
CNP101	1-774-701-21	PIN, CONNECTOR 16P			
CNP102	1-580-907-41	PLUG, CONNECTOR (BUS CONTROL IN)			
CNP301	1-817-536-11	CONNECTOR, BOARD TO BOARD 28P			
		< JACK >			
CNJ101	1-566-822-41	JACK (REMOTE IN)			
		< DIODE >			
D101	6-501-180-01	DIODE UDZW-TE17-18B			
D102	6-501-180-01	DIODE UDZW-TE17-18B			
D103	8-719-058-24	DIODE RB501V-40TE-17			
D104	6-501-169-01	DIODE UDZW-TE17-6.2B			
D105	6-501-180-01	DIODE UDZW-TE17-18B			
D106	6-501-170-01	DIODE UDZW-TE17-6.8B			
D108	6-501-180-01	DIODE UDZW-TE17-18B			
D109	8-719-049-38	DIODE 1N5404TU			
D110	8-719-053-18	DIODE 1SR154-400TE-25			
D111	8-719-053-18	DIODE 1SR154-400TE-25			
D112	8-719-053-18	DIODE 1SR154-400TE-25			
D113	8-719-053-18	DIODE 1SR154-400TE-25			
D114	8-719-053-18	DIODE 1SR154-400TE-25			
D115	8-719-053-18	DIODE 1SR154-400TE-25			
D116	8-719-053-18	DIODE 1SR154-400TE-25			
D117	8-719-053-18	DIODE 1SR154-400TE-25			
D118	6-500-508-01	DIODE RR263M-400FTR			
D119	6-500-508-01	DIODE RR263M-400FTR			
D120	6-500-508-01	DIODE RR263M-400FTR			
D121	6-500-508-01	DIODE RR263M-400FTR			
D128	6-501-051-01	DIODE BAT54CLT1G			
D301	6-501-013-01	DIODE BAT54ALT1G			
D322	8-719-060-48	DIODE RB751V-40TE-17			
D401	6-501-193-01	DIODE 1SS355WTE-17			
D402	6-501-170-01	DIODE UDZW-TE17-6.8B			
D501	6-501-168-01	DIODE UDZW-TE17-5.6B			
D620	8-719-053-18	DIODE 1SR154-400TE-25			

MAIN

Ref. No.	Part No.	Description			Remark
D621	8-719-053-18	DIODE 1SR154-400TE-25			
D622	6-501-089-01	DIODE RF101L2STE25			
D623	8-719-067-83	DIODE RB161L-40TE25			
D624	8-719-067-83	DIODE RB161L-40TE25			
D625	6-501-180-01	DIODE UDZW-TE17-18B			
D626	6-501-167-01	DIODE UDZW-TE17-5.1B			
D630	1-216-295-11	SHORT CHIP	0		
D651	6-501-089-01	DIODE RF101L2STE25			
D652	6-501-170-01	DIODE UDZW-TE17-6.8B			
D653	6-501-193-01	DIODE 1SS355WTE-17			
D840	6-501-170-01	DIODE UDZW-TE17-6.8B			
D841	6-501-170-01	DIODE UDZW-TE17-6.8B			
D842	6-501-170-01	DIODE UDZW-TE17-6.8B			
D843	6-501-180-01	DIODE UDZW-TE17-18B			
D844	6-501-170-01	DIODE UDZW-TE17-6.8B			
D845	6-501-170-01	DIODE UDZW-TE17-6.8B			
D846	6-501-170-01	DIODE UDZW-TE17-6.8B			
D847	6-501-170-01	DIODE UDZW-TE17-6.8B			
D848	6-501-170-01	DIODE UDZW-TE17-6.8B			
D849	6-501-170-01	DIODE UDZW-TE17-6.8B			
D850	6-501-170-01	DIODE UDZW-TE17-6.8B			
D851	6-501-170-01	DIODE UDZW-TE17-6.8B			
D904	6-501-193-01	DIODE 1SS355WTE-17			
D906	6-501-193-01	DIODE 1SS355WTE-17			
D907	8-719-060-48	DIODE RB751V-40TE-17			
D909	6-501-193-01	DIODE 1SS355WTE-17			
		< JUMPER RESISTOR >			
FB328	1-216-295-11	SHORT CHIP	0		
FB329	1-216-295-11	SHORT CHIP	0		
FB332	1-216-295-11	SHORT CHIP	0		
FB333	1-216-295-11	SHORT CHIP	0		
FB334	1-216-295-11	SHORT CHIP	0		
FB335	1-216-295-11	SHORT CHIP	0		
FB402	1-414-813-11	FERRITE, EMI (SMD) (2012)			
FB501	1-216-295-11	SHORT CHIP	0		
FB502	1-216-295-11	SHORT CHIP	0		
FB551	1-216-001-00	RES-CHIP	10	5%	1/10W (GT700D)
FB552	1-216-001-00	RES-CHIP	10	5%	1/10W (GT700D)
FB801	1-500-245-11	INDUCTOR, FERRITE BEAD			
		< IC >			
IC110	6-703-884-01	IC BA8271F-E2			
IC201	6-705-359-02	IC TDA8588AJ/N2/R1			
IC301	6-705-373-01	IC MM3123DPLE			
IC302	8-759-659-13	IC PST3428UL			
IC303	6-806-248-01	IC M30622MWP-305GP			
IC401	6-709-028-01	IC BD3426K-E2			
IC402	6-709-146-01	IC NJM2792V(TE2)			
IC470	8-759-697-21	IC NJM4565V(TE2)			
IC471	8-759-697-21	IC NJM4565V(TE2)			
IC472	8-759-697-21	IC NJM4565V(TE2)			
IC474	8-759-681-42	IC NJM12902V(TE2)			
IC551	6-803-747-01	IC TDA7333013TR (GT700D)			
IC620	6-705-542-01	IC NJM2377M(TE2)			
IC650	6-709-000-01	IC NJM2379V			

Ref. No.	Part No.	Description			Remark
IC801	6-709-063-01	IC ADAU1421YSTZ			
IC802	6-703-996-01	IC BR24L04FV-WE2			
		< JUMPER RESISTOR >			
JR602	1-216-864-11	SHORT CHIP	0		
JR603	1-216-864-11	SHORT CHIP	0 (GT700D)		
JR604	1-216-864-11	SHORT CHIP	0		
JR605	1-216-864-11	SHORT CHIP	0		
JR606	1-216-864-11	SHORT CHIP	0		
JR607	1-216-864-11	SHORT CHIP	0		
JR608	1-216-864-11	SHORT CHIP	0		
JR609	1-216-864-11	SHORT CHIP	0		
JR613	1-216-864-11	SHORT CHIP	0		
JR615	1-216-803-11	METAL CHIP	33	5%	1/10W
JR618	1-216-295-11	SHORT CHIP	0		
JR621	1-216-864-11	SHORT CHIP	0		
		< COIL >			
L101	1-456-617-11	COIL, CHOKE			
L301	1-414-398-11	INDUCTOR	10uH		
L303	1-414-398-11	INDUCTOR	10uH		
L304	1-216-296-11	SHORT CHIP	0		
L401	1-414-394-41	INDUCTOR	2.2uH		
L502	1-216-296-11	SHORT CHIP	0		
L503	1-414-394-41	INDUCTOR	2.2uH		
L520	1-216-296-11	SHORT CHIP	0		
L620	1-457-073-11	INDUCTOR	47uH		
L651	1-457-073-11	INDUCTOR	47uH		
L652	1-457-073-11	INDUCTOR	47uH		
L653	1-414-394-41	INDUCTOR	2.2uH		
L654	1-216-296-11	SHORT CHIP	0		
L655	1-216-296-11	SHORT CHIP	0		
L800	1-414-398-11	INDUCTOR	10uH		
L801	1-414-400-41	INDUCTOR	22uH		
		< JACK >			
PJ401	1-774-700-11	JACK, PIN 6P (AUDIO OUT FRONT/REAR, BUS AUDIO IN)			
PJ501	1-815-185-13	JACK (ANTENNA)			
		< TRANSISTOR >			
Q101	8-729-027-43	TRANSISTOR DTC114EKA-T146			
Q102	8-729-120-28	TRANSISTOR 2SC1623-L5L6			
Q103	8-729-120-28	TRANSISTOR 2SC1623-L5L6			
Q110	8-729-027-23	TRANSISTOR DTA114EKA-T146			
Q111	8-729-027-23	TRANSISTOR DTA114EKA-T146			
Q112	8-729-027-43	TRANSISTOR DTC114EKA-T146			
Q134	8-729-027-43	TRANSISTOR DTC114EKA-T146			
Q171	6-550-752-01	TRANSISTOR DTC614TKT146			
Q181	6-550-752-01	TRANSISTOR DTC614TKT146			
Q271	6-550-752-01	TRANSISTOR DTC614TKT146			
Q281	6-550-752-01	TRANSISTOR DTC614TKT146			
Q301	6-551-120-01	TRANSISTOR 2SA2119K			
Q302	8-729-027-43	TRANSISTOR DTC114EKA-T146			
Q380	1-801-806-11	TRANSISTOR DTC144EKA (GT700D)			
Q401	8-729-027-46	TRANSISTOR DTC114YKA-T146			
Q402	8-729-027-23	TRANSISTOR DTA114EKA-T146			

Ref. No.	Part No.	Description			Remark
Q408	6-550-683-01	FET RJK005N03-T146			
Q470	6-550-752-01	TRANSISTOR DTC614TKT146			
Q501	6-551-431-01	TRANSISTOR 2SC6027T100-QR			
Q551	8-729-026-49	TRANSISTOR 2SA1037AK-T146-R (GT700D)			
Q552	1-801-806-11	TRANSISTOR DTC144EKA (GT700D)			
Q601	8-729-027-23	TRANSISTOR DTA114EKA-T146			
Q620	6-551-131-01	FET 2SK3614-TD-E			
Q621	8-729-027-23	TRANSISTOR DTA114EKA-T146			
Q622	1-801-806-11	TRANSISTOR DTC144EKA			
Q623	1-801-806-11	TRANSISTOR DTC144EKA			
Q624	1-801-806-11	TRANSISTOR DTC144EKA			
Q642	8-729-027-23	TRANSISTOR DTA114EKA-T146			
Q651	6-550-877-01	TRANSISTOR 2SA2049T100R			
Q652	6-550-683-01	FET RJK005N03-T146			
Q801	8-729-106-60	TRANSISTOR 2SB1115A-YQ			
Q907	8-729-120-28	TRANSISTOR 2SC1623-L5L6			
		< RESISTOR >			
R101	1-216-077-11	RES-CHIP	15K	5%	1/10W
R102	1-216-049-11	RES-CHIP	1K	5%	1/10W
R103	1-216-821-11	METAL CHIP	1K	5%	1/10W
R104	1-216-829-11	METAL CHIP	4.7K	5%	1/10W
R105	1-216-841-11	METAL CHIP	47K	5%	1/10W
R106	1-216-841-11	METAL CHIP	47K	5%	1/10W
R107	1-216-073-00	RES-CHIP	10K	5%	1/10W
R108	1-216-073-00	RES-CHIP	10K	5%	1/10W
R109	1-216-833-11	METAL CHIP	10K	5%	1/10W
R110	1-216-833-11	METAL CHIP	10K	5%	1/10W
R111	1-216-841-11	METAL CHIP	47K	5%	1/10W
R112	1-216-821-11	METAL CHIP	1K	5%	1/10W
R114	1-216-809-11	METAL CHIP	100	5%	1/10W
R115	1-216-809-11	METAL CHIP	100	5%	1/10W
R116	1-216-809-11	METAL CHIP	100	5%	1/10W
R117	1-216-821-11	METAL CHIP	1K	5%	1/10W
R118	1-216-821-11	METAL CHIP	1K	5%	1/10W
R119	1-216-829-11	METAL CHIP	4.7K	5%	1/10W
R126	1-216-849-11	METAL CHIP	220K	5%	1/10W
R127	1-216-849-11	METAL CHIP	220K	5%	1/10W
R142	1-216-833-11	METAL CHIP	10K	5%	1/10W
R143	1-216-833-11	METAL CHIP	10K	5%	1/10W
R174	1-216-813-11	METAL CHIP	220	5%	1/10W
R175	1-216-841-11	METAL CHIP	47K	5%	1/10W
R184	1-216-813-11	METAL CHIP	220	5%	1/10W
R185	1-216-841-11	METAL CHIP	47K	5%	1/10W
R201	1-216-841-11	METAL CHIP	47K	5%	1/10W
R202	1-216-811-11	METAL CHIP	150	5%	1/10W
R203	1-216-821-11	METAL CHIP	1K	5%	1/10W
R204	1-216-821-11	METAL CHIP	1K	5%	1/10W
R205	1-216-821-11	METAL CHIP	1K	5%	1/10W
R206	1-216-821-11	METAL CHIP	1K	5%	1/10W
R207	1-216-821-11	METAL CHIP	1K	5%	1/10W
R242	1-216-833-11	METAL CHIP	10K	5%	1/10W
R243	1-216-833-11	METAL CHIP	10K	5%	1/10W
R274	1-216-813-11	METAL CHIP	220	5%	1/10W
R275	1-216-841-11	METAL CHIP	47K	5%	1/10W
R284	1-216-813-11	METAL CHIP	220	5%	1/10W
R285	1-216-841-11	METAL CHIP	47K	5%	1/10W
R302	1-216-833-11	METAL CHIP	10K	5%	1/10W

Ref. No.	Part No.	Description			Remark
R303	1-216-833-11	METAL CHIP	10K	5%	1/10W
R306	1-216-845-11	METAL CHIP	100K	5%	1/10W
R307	1-216-833-11	METAL CHIP	10K	5%	1/10W (GT700D)
R309	1-216-845-11	METAL CHIP	100K	5%	1/10W
R310	1-216-839-11	METAL CHIP	33K	5%	1/10W (GT700D)
R311	1-216-843-11	METAL CHIP	68K	5%	1/10W (GT700D)
R312	1-216-843-11	METAL CHIP	68K	5%	1/10W
R313	1-216-839-11	METAL CHIP	33K	5%	1/10W
R314	1-216-843-11	METAL CHIP	68K	5%	1/10W
R318	1-216-833-11	METAL CHIP	10K	5%	1/10W
R319	1-216-821-11	METAL CHIP	1K	5%	1/10W
R320	1-216-864-11	SHORT CHIP	0		
R321	1-216-845-11	METAL CHIP	100K	5%	1/10W (GT705DX)
R322	1-216-825-11	METAL CHIP	2.2K	5%	1/10W
R323	1-216-825-11	METAL CHIP	2.2K	5%	1/10W
R324	1-216-864-11	SHORT CHIP	0		
R325	1-216-845-11	METAL CHIP	100K	5%	1/10W
R331	1-216-845-11	METAL CHIP	100K	5%	1/10W
R332	1-218-871-11	METAL CHIP	10K	0.5%	1/10W
R333	1-216-809-11	METAL CHIP	100	5%	1/10W
R334	1-216-841-11	METAL CHIP	47K	5%	1/10W
R335	1-216-839-11	METAL CHIP	33K	5%	1/10W
R336	1-216-845-11	METAL CHIP	100K	5%	1/10W
R337	1-216-841-11	METAL CHIP	47K	5%	1/10W
R338	1-216-821-11	METAL CHIP	1K	5%	1/10W
R339	1-216-821-11	METAL CHIP	1K	5%	1/10W
R342	1-216-845-11	METAL CHIP	100K	5%	1/10W
R343	1-216-809-11	METAL CHIP	100	5%	1/10W
R344	1-216-809-11	METAL CHIP	100	5%	1/10W
R345	1-216-809-11	METAL CHIP	100	5%	1/10W
R346	1-216-833-11	METAL CHIP	10K	5%	1/10W
R347	1-216-809-11	METAL CHIP	100	5%	1/10W
R350	1-216-809-11	METAL CHIP	100	5%	1/10W
R351	1-216-809-11	METAL CHIP	100	5%	1/10W
R356	1-218-871-11	METAL CHIP	10K	0.5%	1/10W
R357	1-218-871-11	METAL CHIP	10K	0.5%	1/10W
R360	1-216-845-11	METAL CHIP	100K	5%	1/10W (GT705DX)
R361	1-216-845-11	METAL CHIP	100K	5%	1/10W (GT700D)
R363	1-216-845-11	METAL CHIP	100K	5%	1/10W
R364	1-216-845-11	METAL CHIP	100K	5%	1/10W
R365	1-216-845-11	METAL CHIP	100K	5%	1/10W
R366	1-216-845-11	METAL CHIP	100K	5%	1/10W
R367	1-216-845-11	METAL CHIP	100K	5%	1/10W
R372	1-216-809-11	METAL CHIP	100	5%	1/10W
R373	1-216-845-11	METAL CHIP	100K	5%	1/10W
R377	1-216-845-11	METAL CHIP	100K	5%	1/10W
R380	1-216-809-11	METAL CHIP	100	5%	1/10W (GT700D)
R381	1-216-825-11	METAL CHIP	2.2K	5%	1/10W
R382	1-216-825-11	METAL CHIP	2.2K	5%	1/10W
R401	1-216-017-11	RES-CHIP	47	5%	1/10W
R402	1-216-813-11	METAL CHIP	220	5%	1/10W
R403	1-216-841-11	METAL CHIP	47K	5%	1/10W

MAIN

Ref. No.	Part No.	Description			Remark
R404	1-216-836-11	METAL CHIP	18K	5%	1/10W
R405	1-216-836-11	METAL CHIP	18K	5%	1/10W
R406	1-216-864-11	SHORT CHIP	0		
R407	1-216-841-11	METAL CHIP	47K	5%	1/10W
R408	1-216-845-11	METAL CHIP	100K	5%	1/10W
R409	1-216-841-11	METAL CHIP	47K	5%	1/10W
R410	1-216-833-11	METAL CHIP	10K	5%	1/10W
R411	1-216-833-11	METAL CHIP	10K	5%	1/10W
R420	1-216-839-11	METAL CHIP	33K	5%	1/10W
R423	1-216-813-11	METAL CHIP	220	5%	1/10W
R424	1-216-825-11	METAL CHIP	2.2K	5%	1/10W
R429	1-216-839-11	METAL CHIP	33K	5%	1/10W
R430	1-216-837-11	METAL CHIP	22K	5%	1/10W
R431	1-216-839-11	METAL CHIP	33K	5%	1/10W
R432	1-216-837-11	METAL CHIP	22K	5%	1/10W
R433	1-216-839-11	METAL CHIP	33K	5%	1/10W
R434	1-216-837-11	METAL CHIP	22K	5%	1/10W
R435	1-216-839-11	METAL CHIP	33K	5%	1/10W
R436	1-216-837-11	METAL CHIP	22K	5%	1/10W
R451	1-216-817-11	METAL CHIP	470	5%	1/10W
R452	1-216-817-11	METAL CHIP	470	5%	1/10W
R453	1-216-817-11	METAL CHIP	470	5%	1/10W
R454	1-216-817-11	METAL CHIP	470	5%	1/10W
R455	1-216-817-11	METAL CHIP	470	5%	1/10W
R461	1-216-809-11	METAL CHIP	100	5%	1/10W
R462	1-216-809-11	METAL CHIP	100	5%	1/10W
R470	1-216-819-11	METAL CHIP	680	5%	1/10W
R471	1-216-819-11	METAL CHIP	680	5%	1/10W
R472	1-216-819-11	METAL CHIP	680	5%	1/10W
R473	1-216-819-11	METAL CHIP	680	5%	1/10W
R474	1-216-819-11	METAL CHIP	680	5%	1/10W
R475	1-216-819-11	METAL CHIP	680	5%	1/10W
R476	1-216-819-11	METAL CHIP	680	5%	1/10W
R477	1-216-819-11	METAL CHIP	680	5%	1/10W
R478	1-216-841-11	METAL CHIP	47K	5%	1/10W
R479	1-216-841-11	METAL CHIP	47K	5%	1/10W
R480	1-216-841-11	METAL CHIP	47K	5%	1/10W
R481	1-216-841-11	METAL CHIP	47K	5%	1/10W
R483	1-216-864-11	SHORT CHIP	0		
R484	1-216-823-11	METAL CHIP	1.5K	5%	1/10W
R485	1-216-821-11	METAL CHIP	1K	5%	1/10W
R487	1-216-864-11	SHORT CHIP	0		
R488	1-216-864-11	SHORT CHIP	0		
R498	1-216-864-11	SHORT CHIP	0		
R501	1-216-821-11	METAL CHIP	1K	5%	1/10W
R502	1-216-864-11	SHORT CHIP	0		
R504	1-216-864-11	SHORT CHIP	0		
R505	1-216-864-11	SHORT CHIP	0		
R521	1-216-864-11	SHORT CHIP	0		
R522	1-216-864-11	SHORT CHIP	0		
R551	1-216-833-11	METAL CHIP	10K	5%	1/10W (GT700D)
R552	1-216-821-11	METAL CHIP	1K	5%	1/10W (GT700D)
R553	1-216-801-11	METAL CHIP	22	5%	1/10W (GT700D)
R554	1-216-845-11	METAL CHIP	100K	5%	1/10W (GT700D)
R555	1-414-813-11	FERRITE, EMI (SMD) (2012) (GT700D)			
R556	1-414-813-11	FERRITE, EMI (SMD) (2012) (GT700D)			
R557	1-216-864-11	SHORT CHIP	0 (GT700D)		
R599	1-216-864-11	SHORT CHIP	0		
R601	1-216-029-00	RES-CHIP	150	5%	1/10W
R602	1-216-029-00	RES-CHIP	150	5%	1/10W
R603	1-216-029-00	RES-CHIP	150	5%	1/10W
R620	1-216-230-00	RES-CHIP	22K	5%	1/8W
R621	1-216-230-00	RES-CHIP	22K	5%	1/8W
R622	1-218-863-11	METAL CHIP	4.7K	0.5%	1/10W
R623	1-218-895-11	METAL CHIP	100K	0.5%	1/10W
R624	1-218-847-11	METAL CHIP	1K	0.5%	1/10W
R625	1-216-025-11	RES-CHIP	100	5%	1/10W
R626	1-216-848-11	METAL CHIP	180K	5%	1/10W
R627	1-216-846-11	METAL CHIP	120K	5%	1/10W
R628	1-216-841-11	METAL CHIP	47K	5%	1/10W
R629	1-216-833-11	METAL CHIP	10K	5%	1/10W
R630	1-216-837-11	METAL CHIP	22K	5%	1/10W
R631	1-216-821-11	METAL CHIP	1K	5%	1/10W
R632	1-216-823-11	METAL CHIP	1.5K	5%	1/10W
R633	1-216-821-11	METAL CHIP	1K	5%	1/10W
R636	1-216-864-11	SHORT CHIP	0		
R637	1-216-839-11	METAL CHIP	33K	5%	1/10W
R644	1-216-296-11	SHORT CHIP	0		
R654	1-216-846-11	METAL CHIP	120K	5%	1/10W
R655	1-216-848-11	METAL CHIP	180K	5%	1/10W
R656	1-216-845-11	METAL CHIP	100K	5%	1/10W
R657	1-216-813-11	METAL CHIP	220	5%	1/10W
R658	1-216-049-11	RES-CHIP	1K	5%	1/10W
R659	1-218-863-11	METAL CHIP	4.7K	0.5%	1/10W
R660	1-218-847-11	METAL CHIP	1K	0.5%	1/10W
R661	1-216-845-11	METAL CHIP	100K	5%	1/10W
R662	1-218-843-11	METAL CHIP	680	0.5%	1/10W
R663	1-216-821-11	METAL CHIP	1K	5%	1/10W
R664	1-216-296-11	SHORT CHIP	0		
R801	1-216-864-11	SHORT CHIP	0		
R802	1-216-818-11	METAL CHIP	560	5%	1/10W
R807	1-216-864-11	SHORT CHIP	0		
R808	1-216-864-11	SHORT CHIP	0		
R809	1-216-864-11	SHORT CHIP	0		
R810	1-216-864-11	SHORT CHIP	0		
R811	1-218-871-11	METAL CHIP	10K	0.5%	1/10W
R812	1-218-871-11	METAL CHIP	10K	0.5%	1/10W
R845	1-216-821-11	METAL CHIP	1K	5%	1/10W
R851	1-218-871-11	METAL CHIP	10K	0.5%	1/10W
R852	1-216-833-11	METAL CHIP	10K	5%	1/10W
R853	1-216-821-11	METAL CHIP	1K	5%	1/10W
R854	1-216-815-11	METAL CHIP	330	5%	1/10W
R855	1-216-815-11	METAL CHIP	330	5%	1/10W
R856	1-216-815-11	METAL CHIP	330	5%	1/10W
R857	1-216-815-11	METAL CHIP	330	5%	1/10W
R858	1-216-821-11	METAL CHIP	1K	5%	1/10W
R859	1-218-871-11	METAL CHIP	10K	0.5%	1/10W
R860	1-216-864-11	SHORT CHIP	0		
R861	1-216-864-11	SHORT CHIP	0		
R862	1-216-864-11	SHORT CHIP	0		
R863	1-216-864-11	SHORT CHIP	0		
R864	1-216-864-11	SHORT CHIP	0		
R868	1-216-825-11	METAL CHIP	2.2K	5%	1/10W

Ref. No.	Part No.	Description			Remark
R869	1-216-825-11	METAL CHIP	2.2K	5%	1/10W
R920	1-216-073-00	RES-CHIP	10K	5%	1/10W
R921	1-216-073-00	RES-CHIP	10K	5%	1/10W
R922	1-216-845-11	METAL CHIP	100K	5%	1/10W
R929	1-216-837-11	METAL CHIP	22K	5%	1/10W
		< SWITCH >			
S302	1-786-458-11	SWITCH, PUSH (1 KEY) (FRONT PANEL DETECT)			
S303	1-692-431-21	SWITCH, TACTILE (RESET)			
		< TRANSFORMER >			
T620	1-443-879-11	TRANSFORMER, DC-DC CONVERTER			
		< THERMISTOR (POSITIVE) >			
TH100	1-801-792-21	THERMISTOR, POSITIVE			
		< TUNER UNIT >			
TUX501	A-3220-961-B	TUNER UNIT (TUX-032)			
		< VIBRATOR >			
X301	1-813-202-11	VIBRATOR, CRYSTAL (32.768kHz)			
X302	1-781-679-11	VIBRATOR, CRYSTAL (6MHz)			
X551	1-813-173-11	VIBRATOR, CRYSTAL (8.664MHz) (GT700D)			
X801	1-813-726-11	OSCILLATOR, CRYSTAL (11.2896MHz)			

****

SENSOR BOARD
****

< SWITCH >

SW2	1-529-566-61	SWITCH, PUSH (1 KEY) (SELF)			
SW3	1-529-566-61	SWITCH, PUSH (1 KEY) (DISC IN)			

****

A-1132-437-A SERVO BOARD, COMPLETE
****

< CAPACITOR >

C7	1-125-777-11	CERAMIC CHIP	0.1uF	10%	10V
C10	1-126-208-21	ELECT CHIP	47uF	20%	4V
C11	1-125-777-11	CERAMIC CHIP	0.1uF	10%	10V
C12	1-125-777-11	CERAMIC CHIP	0.1uF	10%	10V
C13	1-100-567-81	CERAMIC CHIP	0.01uF	10%	25V
C14	1-104-609-11	ELECT CHIP	100uF	20%	4V
C15	1-125-777-11	CERAMIC CHIP	0.1uF	10%	10V
C16	1-162-964-11	CERAMIC CHIP	0.001uF	10%	50V
C17	1-125-777-11	CERAMIC CHIP	0.1uF	10%	10V
C18	1-125-777-11	CERAMIC CHIP	0.1uF	10%	10V
C19	1-125-777-11	CERAMIC CHIP	0.1uF	10%	10V
C20	1-164-677-11	CERAMIC CHIP	0.033uF	10%	16V
C22	1-164-677-11	CERAMIC CHIP	0.033uF	10%	16V
C23	1-125-777-11	CERAMIC CHIP	0.1uF	10%	10V
C24	1-125-777-11	CERAMIC CHIP	0.1uF	10%	10V
C25	1-125-777-11	CERAMIC CHIP	0.1uF	10%	10V
C26	1-162-966-11	CERAMIC CHIP	0.0022uF	10%	50V
C29	1-162-968-11	CERAMIC CHIP	0.0047uF	10%	50V
C30	1-162-968-11	CERAMIC CHIP	0.0047uF	10%	50V
C31	1-125-777-11	CERAMIC CHIP	0.1uF	10%	10V
C32	1-125-777-11	CERAMIC CHIP	0.1uF	10%	10V
C33	1-125-777-11	CERAMIC CHIP	0.1uF	10%	10V
C36	1-125-777-11	CERAMIC CHIP	0.1uF	10%	10V
C39	1-126-208-21	ELECT CHIP	47uF	20%	4V
C40	1-126-395-11	ELECT CHIP	22uF	20%	16V
C41	1-125-777-11	CERAMIC CHIP	0.1uF	10%	10V
C42	1-125-777-11	CERAMIC CHIP	0.1uF	10%	10V
C43	1-100-567-81	CERAMIC CHIP	0.01uF	10%	25V
C44	1-125-777-11	CERAMIC CHIP	0.1uF	10%	10V
C45	1-125-777-11	CERAMIC CHIP	0.1uF	10%	10V
C46	1-162-923-11	CERAMIC CHIP	47PF	5%	50V
C47	1-164-245-11	CERAMIC CHIP	0.015uF	10%	25V
C48	1-100-567-81	CERAMIC CHIP	0.01uF	10%	25V
C49	1-125-777-11	CERAMIC CHIP	0.1uF	10%	10V
C50	1-100-567-81	CERAMIC CHIP	0.01uF	10%	25V
C51	1-125-777-11	CERAMIC CHIP	0.1uF	10%	10V
C52	1-125-777-11	CERAMIC CHIP	0.1uF	10%	10V
C53	1-125-777-11	CERAMIC CHIP	0.1uF	10%	10V
C54	1-100-567-81	CERAMIC CHIP	0.01uF	10%	25V
C55	1-125-777-11	CERAMIC CHIP	0.1uF	10%	10V
C56	1-164-245-11	CERAMIC CHIP	0.015uF	10%	25V
C58	1-125-777-11	CERAMIC CHIP	0.1uF	10%	10V
C60	1-162-964-11	CERAMIC CHIP	0.001uF	10%	50V
C62	1-125-777-11	CERAMIC CHIP	0.1uF	10%	10V
C66	1-100-567-81	CERAMIC CHIP	0.01uF	10%	25V
C67	1-100-567-81	CERAMIC CHIP	0.01uF	10%	25V
C68	1-100-567-81	CERAMIC CHIP	0.01uF	10%	25V
C69	1-100-567-81	CERAMIC CHIP	0.01uF	10%	25V
C70	1-125-777-11	CERAMIC CHIP	0.1uF	10%	10V
C71	1-125-777-11	CERAMIC CHIP	0.1uF	10%	10V
C72	1-125-777-11	CERAMIC CHIP	0.1uF	10%	10V
C80	1-125-837-11	CERAMIC CHIP	1uF	10%	6.3V
C132	1-125-837-11	CERAMIC CHIP	1uF	10%	6.3V
C133	1-125-837-11	CERAMIC CHIP	1uF	10%	6.3V

< CONNECTOR >

CN1	1-691-380-61	CONNECTOR, FFC/FPC (ZIF) 16P
CN2	1-817-275-21	CONNECTOR, BOARD TO BOARD 28P

< JUMPER RESISTOR >

FB2	1-216-864-11	SHORT CHIP	0
FB3	1-216-864-11	SHORT CHIP	0
FB4	1-216-864-11	SHORT CHIP	0

< IC >

IC1	6-707-327-01	IC BA5968FP-E2
IC2	6-708-729-01	IC TC94A70FG-002
IC3	6-806-019-02	IC MB90486BPFV-G-177E1
IC6	6-708-728-01	IC BH15LB1WG

< TRANSISTOR >

Q2	6-551-120-01	TRANSISTOR 2SA2119K
Q3	8-729-928-90	TRANSISTOR DTC114EE
Q21	8-729-904-87	TRANSISTOR 2SB1197K-R

< RESISTOR >

R1	1-218-965-11	RES-CHIP	10K	5%	1/16W
R2	1-218-977-11	RES-CHIP	100K	5%	1/16W

SERVO **SUB**

Ref. No.	Part No.	Description			Remark
R5	1-218-969-11	RES-CHIP	22K	5%	1/16W
R6	1-218-969-11	RES-CHIP	22K	5%	1/16W
R8	1-218-965-11	RES-CHIP	10K	5%	1/16W
R9	1-218-965-11	RES-CHIP	10K	5%	1/16W
R11	1-218-941-81	RES-CHIP	100	5%	1/16W
R12	1-218-969-11	RES-CHIP	22K	5%	1/16W
R13	1-218-969-11	RES-CHIP	22K	5%	1/16W
R14	1-218-929-11	RES-CHIP	10	5%	1/16W
R15	1-218-929-11	RES-CHIP	10	5%	1/16W
R16	1-218-953-11	RES-CHIP	1K	5%	1/16W
R18	1-218-941-81	RES-CHIP	100	5%	1/16W
R19	1-218-935-11	RES-CHIP	33	5%	1/16W
R20	1-162-961-11	CERAMIC CHIP	330PF	10%	50V
R21	1-218-941-81	RES-CHIP	100	5%	1/16W
R22	1-218-977-11	RES-CHIP	100K	5%	1/16W
R23	1-218-977-11	RES-CHIP	100K	5%	1/16W
R24	1-218-977-11	RES-CHIP	100K	5%	1/16W
R25	1-218-977-11	RES-CHIP	100K	5%	1/16W
R26	1-218-977-11	RES-CHIP	100K	5%	1/16W
R27	1-218-977-11	RES-CHIP	100K	5%	1/16W
R28	1-218-945-11	RES-CHIP	220	5%	1/16W
R29	1-218-989-11	RES-CHIP	1M	5%	1/16W
R30	1-218-989-11	RES-CHIP	1M	5%	1/16W
R31	1-218-989-11	RES-CHIP	1M	5%	1/16W
R32	1-218-947-11	RES-CHIP	330	5%	1/16W
R33	1-218-990-81	SHORT CHIP	0		
R34	1-216-864-11	SHORT CHIP	0		
R35	1-162-961-11	CERAMIC CHIP	330PF	10%	50V
R36	1-218-947-11	RES-CHIP	330	5%	1/16W
R37	1-218-947-11	RES-CHIP	330	5%	1/16W
R38	1-218-941-81	RES-CHIP	100	5%	1/16W
R39	1-218-941-81	RES-CHIP	100	5%	1/16W
R40	1-218-941-81	RES-CHIP	100	5%	1/16W
R41	1-218-941-81	RES-CHIP	100	5%	1/16W
R42	1-218-977-11	RES-CHIP	100K	5%	1/16W
R43	1-218-961-11	RES-CHIP	4.7K	5%	1/16W
R44	1-218-977-11	RES-CHIP	100K	5%	1/16W
R46	1-218-945-11	RES-CHIP	220	5%	1/16W
R47	1-218-945-11	RES-CHIP	220	5%	1/16W
R48	1-218-945-11	RES-CHIP	220	5%	1/16W
R52	1-218-962-11	RES-CHIP	5.6K	5%	1/16W
R53	1-218-979-11	RES-CHIP	150K	5%	1/16W
R54	1-218-990-81	SHORT CHIP	0		
R55	1-218-973-11	RES-CHIP	47K	5%	1/16W
R57	1-218-967-11	RES-CHIP	15K	5%	1/16W
R58	1-218-969-11	RES-CHIP	22K	5%	1/16W
R60	1-218-941-81	RES-CHIP	100	5%	1/16W
R61	1-218-941-81	RES-CHIP	100	5%	1/16W
R62	1-218-941-81	RES-CHIP	100	5%	1/16W
R63	1-218-977-11	RES-CHIP	100K	5%	1/16W
R64	1-218-977-11	RES-CHIP	100K	5%	1/16W
R65	1-218-977-11	RES-CHIP	100K	5%	1/16W
R67	1-218-941-81	RES-CHIP	100	5%	1/16W
R68	1-218-941-81	RES-CHIP	100	5%	1/16W
R69	1-218-941-81	RES-CHIP	100	5%	1/16W
R70	1-218-965-11	RES-CHIP	10K	5%	1/16W
R71	1-218-973-11	RES-CHIP	47K	5%	1/16W
R72	1-218-973-11	RES-CHIP	47K	5%	1/16W
R73	1-218-973-11	RES-CHIP	47K	5%	1/16W
R74	1-218-941-81	RES-CHIP	100	5%	1/16W
R75	1-218-941-81	RES-CHIP	100	5%	1/16W
R77	1-218-973-11	RES-CHIP	47K	5%	1/16W
R78	1-218-941-81	RES-CHIP	100	5%	1/16W
R79	1-218-941-81	RES-CHIP	100	5%	1/16W
R80	1-218-941-81	RES-CHIP	100	5%	1/16W
R81	1-218-941-81	RES-CHIP	100	5%	1/16W
R82	1-218-941-81	RES-CHIP	100	5%	1/16W
R83	1-218-977-11	RES-CHIP	100K	5%	1/16W
R84	1-218-941-81	RES-CHIP	100	5%	1/16W
R85	1-218-977-11	RES-CHIP	100K	5%	1/16W
R86	1-218-941-81	RES-CHIP	100	5%	1/16W
R87	1-218-977-11	RES-CHIP	100K	5%	1/16W
R88	1-218-990-81	SHORT CHIP	0		
R96	1-218-941-81	RES-CHIP	100	5%	1/16W
R97	1-220-200-81	RES-CHIP	30K	5%	1/16W
R98	1-218-971-11	RES-CHIP	33K	5%	1/16W
R132	1-218-969-11	RES-CHIP	22K	5%	1/16W
R133	1-218-953-11	RES-CHIP	1K	5%	1/16W
R142	1-218-990-81	SHORT CHIP	0		
R143	1-218-990-81	SHORT CHIP	0		
R145	1-218-990-81	SHORT CHIP	0		
		< SWITCH >			
SW1	1-529-565-61	SWITCH, PUSH (1 KEY) (DOWN)			
		< VIBRATOR >			
X1	1-813-678-11	OSCILLATOR, CERAMIC (CHIP TYPE) (12MHz)			
X2	1-795-561-21	VIBRATOR, CERAMIC (16.9344MHz)			

****

	A-1159-160-A	SUB BOARD, COMPLETE			
		**********			
	1-831-502-11	CABLE, FLEXIBLE FLAT (22 CORE)			
		< CONNECTOR >			
CNP501	1-818-142-11	SOCKET, CONNECTOR 20P			
		< DIODE >			
D990	6-501-170-01	DIODE UDZW-TE17-6.8B			
D991	6-501-170-01	DIODE UDZW-TE17-6.8B			
LED931	6-500-476-01	LED SML310BA1TT86 (DISC IN)			
LED932	6-500-476-01	LED SML310BA1TT86 (⏏)			
		< RESISTOR >			
R990	1-216-809-11	METAL CHIP	100	5%	1/10W
R992	1-216-819-11	METAL CHIP	680	5%	1/10W
		< SWITCH >			
S901	1-786-653-11	SWITCH, TACTILE (⏏)			

****

Ref. No.	Part No.	Description	Remark
		MISCELLANEOUS	
		**********	
13	1-776-207-72	CORD (WITH CONNECTOR) (POWER)	(EXCEPT AEP,UK)
13	1-776-527-71	CORD (WITH CONNECTOR) (ISO) (POWER)	(AEP,UK)
14	1-790-355-54	CORD (WITH CONNECTOR) (RCA)	(SUB OUT (MONO))
⚠153	8-820-207-12	OPTICAL PICK-UP (KSS1000E/K1RP)	
154	A-1075-645-A	CHASSIS (OP) SUB ASSY (including M901)	
F901	1-532-877-11	FUSE (BLADE TYPE) (AUTO FUSE) 10A	
M902	A-3372-447-A	MOTOR ASSY, SL (SLED)	
M903	A-1166-300-A	MOTOR ASSY (B), LE (LOADING)	
SW4	1-571-099-11	SWITCH (1 KEY) (LIMIT)	
**********			
		ACCESSORIES	
		**********	
	1-479-077-23	REMOTE COMMANDER (RM-X152) (GT705DX)	
	1-479-077-43	REMOTE COMMANDER (RM-X154) (GT700D)	
	2-548-729-01	LID, BATTERY CASE (for RM-X152/X154)	
	2-664-436-11	MANUAL, INSTRUCTION (ENGLISH,FRENCH,	SPANISH) (GT705DX)
	2-664-436-21	MANUAL, INSTRUCTION (ENGLISH,GERMAN,	FRENCH,ITALIAN,DUTCH) (AEP,UK)
	2-664-436-31	MANUAL, INSTRUCTION (ENGLISH,SPANISH,	SIMPLIFIED CHINESE) (E)
	2-664-437-11	MANUAL, INSTRUCTION, INSTALL (ENGLISH,	FRENCH,SPANISH) (GT705DX)
	2-664-437-21	MANUAL, INSTRUCTION, INSTALL (ENGLISH,	GERMAN,FRENCH,ITALIAN,DUTCH) (AEP,UK)
	2-664-437-31	MANUAL, INSTRUCTION, INSTALL (ENGLISH,	SPANISH,SIMPLIFIED CHINESE) (E)
	X-2055-358-1	CASE ASSY (for FRONT PANEL)	
**********			

Ref. No.	Part No.	Description	Remark
		PARTS FOR INSTALLATION AND CONNECTIONS	
		**********	
301	X-3382-647-1	FRAME ASSY, FITTING	
302	1-465-459-31	ADAPTOR, ANTENNA (AEP,UK)	
303	1-776-527-71	CORD (WITH CONNECTOR) (ISO) (POWER)	(AEP,UK)
304	1-776-207-72	CORD (WITH CONNECTOR) (POWER)	(EXCEPT AEP,UK)
305	3-246-471-01	KEY (FRAME)	
306	2-638-099-01	COLLAR	
307	X-3381-154-1	SCREW ASSY (BS4), FITTING (E)	
308	3-349-410-11	BUSHING (GT700D)	
309	X-3382-926-1	SCREW ASSY (BS), FITTING (AEP,UK)	

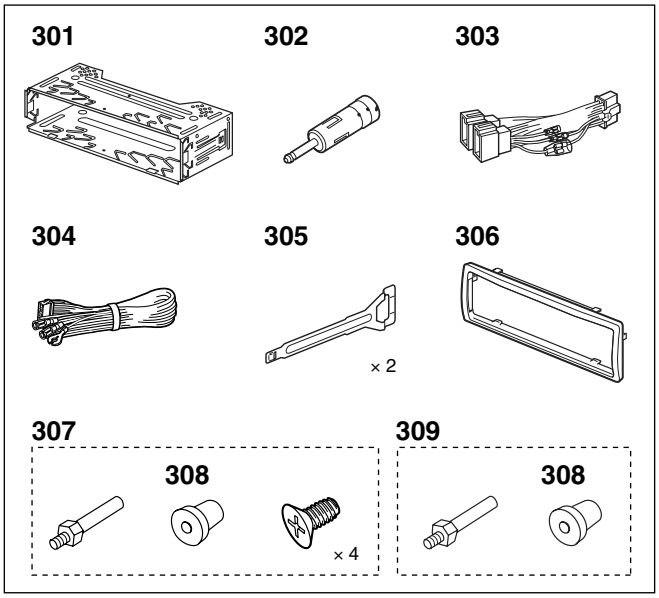

REVISION HISTORY

Clicking the version allows you to jump to the revised page.
Also, clicking the version at the upper on the revised page allows you to jump to the next revised page.

Ver.	Date	Description of Revision
1.0	2005.12	New