CFD-RG880CP

SERVICE MANUAL

E Model
East European Model
Russian Model

Ver. 1.0 2009.01

CD Section	Model Name Using Similar Mechanism	CFD-G700CP/G770CP/G770CPK
	CD Mechanism Type	KSM-213CDP/C2NP
	Optical Pick-up Name	KSS-213C
TAPE Section	Model Name Using Similar Mechanism	CFD-G505
	Tape Transport Mechanism Type	MF-G505V

SPECIFICATIONS

CD player section

System
Compact disc digital audio system
Laser diode properties
Emission duration: Continuous
Laser output: Less than 44.6 µW
(This output is the value measured at a distance of about 200 mm from the objective lens surface on the optical pick-up block with 7 mm aperture.)
Number of channels
2
Frequency response
20 - 20 000 Hz +1/–2 dB
Wow and flutter
Below measurable limit

Radio section

Frequency range
MX model:
FM: 87.5 - 108 MHz
AM: 530 - 1 710 kHz
BR, CET, E41, E92 model:
FM: 87.5 - 108 MHz
AM: 531 - 1 611 kHz (9 kHz step)
530 - 1 610 kHz (10 kHz step)
Antennas
FM: Telescopic antenna
AM: Built-in ferrite bar antenna

Cassette-corder section

Recording system
4-track 2 channel stereo
Fast winding time
Approx. 150 s (sec.) with Sony cassette C-60
Frequency response
TYPE I (normal): 70 - 13 000 Hz

USB section

Supported bit rate
MP3 (MPEG 1 Audio Layer-3):
32 - 320 kbps, VBR
WMA:
16 - 320 kbps, VBR
Sampling frequencies
MP3 (MPEG 1 Audio Layer-3):
32/44.1/48 kHz
WMA:
32/44.1/48kHz
(USB) port
USB-A (Full Speed)

– Continued on next page –

CD RADIO CASSETTE-CORDER

9-889-387-01
2009A04-1
© 2009.01

Sony Corporation
Audio&Video Business Group
Published by Sony Techno Create Corporation

SONY®

General

Speaker
- Full range: 10 cm (4 in.) dia., 3.2 Ω, cone type (2)
- Woofer: 13 cm (5 1/8 in.) dia., 4 Ω, cone type (1)
- Tweeter: 2 cm (13/16 in.) dia. (2)

Input
- Built-in audio cable with stereo-mini plug:
  - Minimum input level 245 mV
- AUDIO IN Jack (stereo minijack):
  - Minimum input level 245 mV
- (USB) port: Type A, maximum current 500 mA

Outputs
- Headphones jack (stereo minijack)
- For 16 - 68 Ω impedance headphones

Power output
- 4 W + 4 W (at 3.2 Ω, 10% harmonic distortion)
- Woofer:
- 12 W (at 4 Ω, 10% harmonic distortion)

Power requirements
- For CD radio cassette-corder:
- E91, MX model: 120 V AC, 60 Hz
- BR model: 120 – 127/220 – 230 V AC, 50/60 Hz
- CET, E41 model: 230 V AC, 50 Hz
- 12 V DC, 8 R20 (size D) batteries
- For remote control:
- 3 V DC, 2 R6 (size AA) batteries

Power consumption
- AC 28 W

Battery life
- For CD radio cassette-corder:

FM recording
Sony R20P: approx. 6 h
Sony alkaline LR20: approx. 18 h
Tape playback
Sony R20P: approx. 1.5 h
Sony alkaline LR20: approx. 6 h
CD playback
Sony R20P: approx. 1 h
Sony alkaline LR20: approx. 5 h

Dimensions
- Approx. 551 × 263 × 380 mm (w/h/d)
- (incl. projecting parts)

Mass
- Approx. 8.5 kg (incl. batteries)

Supplied accessories
- AC power cord (1)
- Remote control (1)

Design and specifications are subject to change without notice.

- Abbreviation
  - BR : Brazilian model
  - CET : East European & Russian model
  - E41 : 230V AC area in E model
  - E92 : 120V AC area in E model
  - MX : Mexican model

SAFETY-RELATED COMPONET WARNING!

COMPONENTS IDENTIFIED BY MARK ⚠ OR DOTTED LINE WITH MARK ⚠ ON THE SCHEMATIC DIAGRAMS AND IN THE PARTS LIST ARE CRITICAL TO SAFE OPERATION. REPLACE THESE COMPONENTS WITH SONY PARTS WHOSE PART NUMBERS APPEAR AS SHOWN IN THIS MANUAL OR IN SUPPLEMENTS PUBLISHED BY SONY.

NOTES ON CHIP COMPONENT REPLACEMENT

- Never reuse a disconnected chip component.
- Notice that the minus side of a tantalum capacitor may be damaged by heat.

FLEXIBLE CIRCUIT BOARD REPAIRING

- Keep the temperature of soldering iron around 270 °C during repairing.
- Do not touch the soldering iron on the same conductor of the circuit board (within 3 times).
- Be careful not to apply force on the conductor when soldering or unsoldering.

UNLEADED SOLDER

Boards requiring use of unleaded solder are printed with the lead-free mark (LF) indicating the solder contains no lead.
(**Caution:** Some printed circuit boards may not come printed with the lead free mark due to their particular size)

: LEAD FREE MARK

Unleaded solder has the following characteristics.

- Unleaded solder melts at a temperature about 40 °C higher than ordinary solder.
  Ordinary soldering irons can be used but the iron tip has to be applied to the solder joint for a slightly longer time.
  Soldering irons using a temperature regulator should be set to about 350 °C.
  Caution: The printed pattern (copper foil) may peel away if the heated tip is applied for too long, so be careful!
- Strong viscosity
  Unleaded solder is more viscous (sticky, less prone to flow) than ordinary solder so use caution not to let solder bridges occur such as on IC pins, etc.
- Usable with ordinary solder
  It is best to use only unleaded solder but unleaded solder may also be added to ordinary solder.

TABLE OF CONTENTS

1. SERVICING NOTES 4

2. GENERAL 5

3. DISASSEMBLY
3-1. Cabinet (Upper) Section-1 9
3-2. Cabinet (Upper) Section-2 9
3-3. Cabinet (Front) Section 10
3-4. POWER KEY Board, HEADPHONE Board, VOLUME KEY Board, AUDIO IN Board 10
3-5. Front Panel 11
3-6. LCD Board 11
3-7. LED Boards 12
3-8. Speaker (13 cm) 12
3-9. Speaker (10 cm) 13
3-10. POWER Board 13
3-11. TUNER Board 14
3-12. MAIN Board 14
3-13. FUNCTION KEY Board, CD KEY Board 15
3-14. SOUND KEY Board, USB Board 15
3-15. CD Block Section 16
3-16. Optical Pick-up 16
3-17. Tape Mechanism Deck 17
3-18. Belt (Main), Belt (RF) 17
3-19. TC Board 18

4. TEST MODE 19

5. MECHANICAL ADJUSTMENTS 20

6. ELECTRICAL ADJUSTMENTS 21

7. DIAGRAMS
7-1. Block Diagram –CD Section– 25
7-2. Block Diagram –TUNER Section– 26
7-3. Block Diagram –MAIN Section– 27
7-4. Block Diagram –POWER Section– 28
7-5. Printed Wiring Board –CD Section– 31
7-6. Schematic Diagram –CD Section– 32
7-7. Printed Wiring Board –TUNER Section– 33
7-8. Schematic Diagram –TUNER Section– 34
7-9. Printed Wiring Board –TC Section– 35
7-10. Schematic Diagram –TC Section– 36
7-11. Printed Wiring Board –MAIN Section– 37
7-12. Printed Wiring Boards –JACK Section– 38
7-13. Schematic Diagram –MAIN Section (1/3)– 39
7-14. Schematic Diagram –MAIN Section (2/3)– 40
7-15. Schematic Diagram –MAIN Section (3/3)– 41
7-16. Printed Wiring Board –LCD Section– 42
7-17. Schematic Diagram –LCD Section– 43
7-18. Printed Wiring Boards –KEY Section– 44
7-19. Schematic Diagram –KEY Section– 45
7-20. Printed Wiring Boards –POWER Section– 46
7-21. Schematic Diagram –POWER Section– 47

8. EXPLODED VIEWS
8-1. Overall Section 56
8-2. Cabinet (Front) Section 57
8-3. Cabinet (Rear) Section 58
8-4. Cabinet (Upper) Section-1 59
8-5. Cabinet (Upper) Section-2 60
8-6. Tape Mechanism Deck Section 61

9. ELECTRICAL PARTS LIST 62

SECTION 1
SERVICING NOTES

NOTES ON HANDLING THE OPTICAL PICK-UP BLOCK OR BASE UNIT

The laser diode in the optical pick-up block may suffer electrostatic break-down because of the potential difference generated by the charged electrostatic load, etc. on clothing and the human body.
During repair, pay attention to electrostatic break-down and also use the procedure in the printed matter which is included in the repair parts.
The flexible board is easily damaged and should be handled with care.

NOTES ON LASER DIODE EMISSION CHECK

The laser beam on this model is concentrated so as to be focused on the disc reflective surface by the objective lens in the optical pickup block. Therefore, when checking the laser diode emission, observe from more than 30 cm away from the objective lens.

CHUCK PLATE JIG ON REPAIRING

On repairing CD section, playing a disc without the CD lid, use Chuck Plate Jig.

- Code number of Chuck Plate Jig : X-4918-255-1

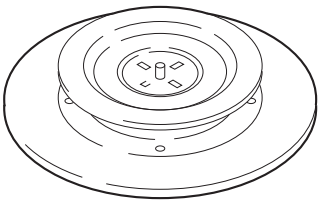

LASER DIODE AND FOCUS SEARCH OPERATION CHECK

1. Turn ON the [POWER] button.
2. Open the CD lid.
3. Turn on SW2 with screwdriver, etc. as following figure.
4. Press the [▶II] (CD) button.
5. Confirm the laser diode emission while observing the objecting lens. When there is no emission, Auto Power Control circuit or Optical Pick-up is broken.
   Objective lens moves up and down eight times for focus search.

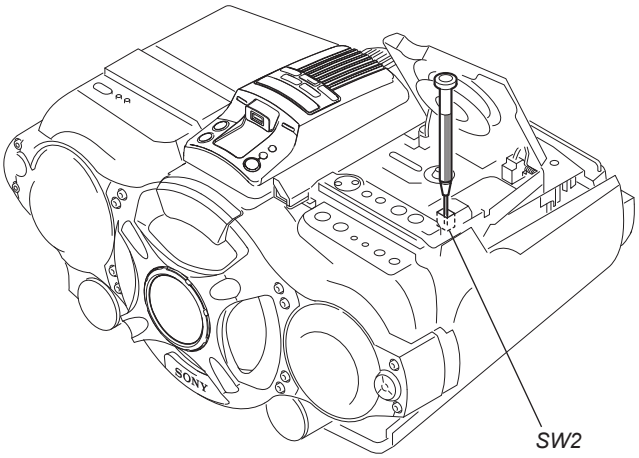

SECTION 2
GENERAL

This section is extracted from instruction manual.

• Basic Operations

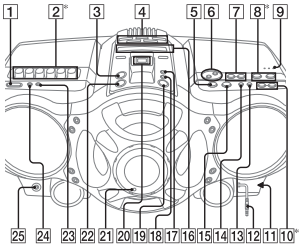

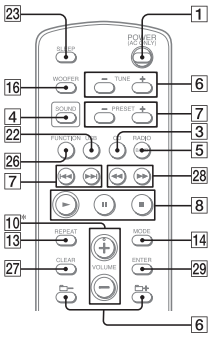

* VOL + (VOLUME + on the remote) 10, ▶II 8 and ► 2 (on the unit) have a tactile dot.

Before using the unit

To turn on/off the power
Press POWER 1.

To adjust the volume
Press VOL +, – (VOLUME +, – on the remote) 10.

To listen through headphones
Connect the headphones to the 🎧 (headphones) jack 25.

To select the sound characteristic
Press ROCK, DANCE, SALSA, REGGAETON or FLAT 4 to select the kind of audio emphasis that you want. (On the remote, press SOUND 4 repeatedly.)
The level meter in the display shows the sound signal strength.

To reinforce the bass sound

Press POWER DRIVE WOOFER (WOOFER on the remote) 16.
The effectiveness of the WOOFER function can be changed as follows:

When the LIGHT SYNC function is on, the ring around the woofer speaker lights up, in accordance with the sound signal strength.
To return to normal sound, press the button repeatedly until the indication disappears from the display.

Notes
- While the sleeping timer is on, the ring does not light, even if the WOOFER function is used.
- When you use the headphones, the WOOFER function does not work.

To turn off the demo mode

When you connect the power cord to a wall outlet, the demo mode will start automatically. To turn off the demo mode, press POWER 1.
If you do not want to turn on the power of the unit, operate the following steps to turn off:

1 While holding down DSPL/ENT 24, press STOP 8.

To resume the demo mode, perform the same step again.

Note
When you operate the unit on batteries, the demo mode is not activated.

Playing a CD/MP3/WMA disc

1 Press CD 3 on the unit.
(On the remote, press POWER 1 and then press CD 3.)

2 Press ⏏ PUSH OPEN/CLOSE 9 on the unit, and place a disc with the label side up into the CD compartment.

To close the CD compartment, press ⏏ PUSH OPEN/CLOSE 9 on the unit.

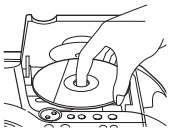

3 Press ▶II on the unit (► on the remote) 8.

The unit plays all the tracks/MP3/WMA files once.

When you place MP3/WMA discs, "MP3" or "WMA" appears in the display after the unit reads the file information.

Audio CD

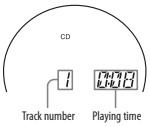

MP3/WMA disc (Example: When you place MP3 disc)

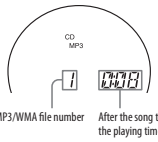

* If the playing time is more than 100 minutes, it appears as "--:--" in the display.

To	Press
Pause playback	▶II on the unit (II on the remote) 8. To resume play, press it again.
Stop playback	■ 8.
Go to the next track/MP3/WMA file	▶▶I 7.
Go back to the previous track/ MP3/WMA file	I◀◀ 7.
Select a folder on an MP3/WMA disc	🗀 + to go forward and 🗀 – to go backward 6.
Locate a point while listening to the sound	▶▶I (forward) or I◀◀ (backward) 7 while playing and hold it until you find the point (◀◀ or ▶▶ 28 on the remote).
Locate a point while observing the display	▶▶I (forward) or I◀◀ (backward) 7 in pause and hold it until you find the point (◀◀ or ▶▶ 28 on the remote).
Remove the CD	⏏ PUSH OPEN/CLOSE 9.

Tips
- Playback starts from the track/MP3/WMA file you last stopped playing (Resume play). During stop, the track/MP3/WMA file number to be played is displayed.
- To cancel the resume play (to start play from the beginning of the first track/MP3/WMA file), press ■ 8 while the CD is stopped. When you open the CD compartment or turn off the unit, the resume play is also canceled.

Note
You cannot locate a specific track if "SHUF" or "PGM" is lit in the display.
Press ■ 8, and then press MODE 14 repeatedly until "SHUF" and "PGM" disappear from the display.

Example of folder structure and playing order
The playing order of the folders and files is as follows:

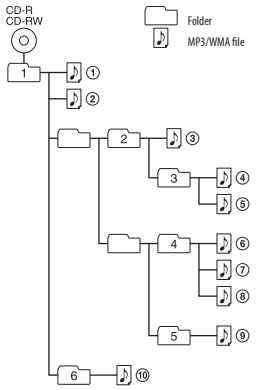

Notes on MP3/WMA discs
- When the disc is inserted, the unit reads all the files on that disc. During this time, "READING" is displayed. If there are many folders or non-MP3/WMA files on the disc, it may take a long time for play to begin or for the next MP3/WMA file to start play.
  We recommend that you do not save unnecessary folders or files other than MP3/WMA ones in the disc to be used for MP3/WMA listening.
- A folder that does not include an MP3/WMA file is skipped.
- Maximum number of files: 511
  Maximum number of folders: 511 (including the root folder)
  Maximum directory levels: 8
- Folder names and file names can be displayed with up to 32 characters including quotation marks.
- The characters A - Z, 0 - 9, and _ can be displayed on this unit. Other characters are displayed as "_".
- This unit conforms to Version 1.0, 1.1, 2.2, 2.3 and 2.4 of the ID3 tag format. When the file has the ID3 tag information, "song title", "artist name" and "album name" can be displayed. If the file does not have the ID3 tag information, "NO TITLE" appears instead of song title, "NO ARTIST" appears instead of artist name and "NO ALBUM" appears instead of album name. The ID3 tag information can be displayed with up to 32 characters.
- When naming, be sure to add the file extension ".mp3" or ".wma" to the file name.
- If you put the extension ".mp3" or ".wma" to a file other than an MP3/WMA file, the unit cannot recognize the file properly and will generate random noise that could damage your speakers.
- The file name does not correspond to the ID3 tag.

Listening to the radio

1 Press RADIO/BAND•AUTO PRESET 5 on the unit (RADIO/BAND 5 on the remote) repeatedly.

Each time you press the button, the indication changes as follows:
"FM" → "AM"

2 Hold down 🗀 TUNE + or – 6 until the frequency digits begin to change in the display.

The unit automatically scans the radio frequencies and stops when it finds a clear station.

If you cannot tune in a station, press 🗀 TUNE + or – 6 repeatedly to change the frequency step by step.

When an FM stereo broadcast is received, "ST" appears.

Tip
If the FM broadcast is noisy, press MODE 14 until "Mono" appears in the display and the radio will play in monaural.

Changing the AM tuning interval (except for Mexican model)

If you need to change the AM tuning interval, do the following:

1 Press RADIO/BAND•AUTO PRESET 5 on the unit until "AM" is displayed.

2 Hold down DSPL/ENT 24 until the preset number flashes in the display, then press RADIO/ BAND•AUTO PRESET 5 on the unit for 2 seconds.

3 Press PRESET + or – 7 on the unit to select "9K STEP" for 9 kHz interval or "10K STEP" for 10 kHz interval.

4 Press DSPL/ENT 24 on the unit.

After changing the tuning interval, you need to reset your preset radio stations.

Playing a tape

Use the buttons on the unit for the operation.

1 Press ■⏏ 2 on the unit, and insert the tape into the tape compartment with the side you want to play facing upward. Use TYPE I (normal) tape only. Close the compartment.

Make sure there is no slack in the tape to avoid damaging the tape or the unit.

2 Press ► 2 on the unit.

The unit starts playing.

To	Press
Pause playback	II 2 on the unit. To resume play, press it again.
Stop playback	■⏏ 2 on the unit.
Fast-forward or rewind	◀◀ or ▶▶ (rewind or fast forward) 2 on the unit.
Eject the cassette	■⏏ 2 on the unit.

Recording on a tape

Use the buttons on the unit for the operation.

1 Press ■⏏ 2 on the unit to open the tape compartment and insert a blank tape with the side you want to record on facing upward. Use TYPE I (normal) tape only. Close the compartment.

2 Select the program source you want to record.

To record from the CD player, press CD 3 on the unit and place a CD.

To record from a USB device, press USB 22 on the unit and connect the USB device.

To record from the radio, tune in the station you want (see "Listening to the radio").

3 Press ● 2 on the unit to start recording (► is depressed automatically).

To	Press
Pause recording	II 2 on the unit. Press the button again to resume recording.
Stop recording	■⏏ 2 on the unit.

Tips
- Adjusting the volume or the audio emphasis will not affect the recording level.
- If the AM program makes a whistling sound after you have pressed ● 2 in step 3, press MODE 14 on the unit to select the position of ISS (Interference Suppress Switch) that most decreases the noise.
- For the best results, use the AC power as a power source for recording.
- To erase a recording, proceed as follows:
  1 Insert the tape whose recording you want to erase.
  2 Make sure that "TAPE" is displayed. (If "TAPE" is not displayed, press ► 2 on the unit or press FUNCTION 26 on the remote until it appears in the display.)
  3 Press ● 2 on the unit.

Listening to music of a USB device

You can listen to music stored on a USB device (digital music player or USB storage media).
Music files in WMA and MP3 format* can be played on this unit.
See "Playable/Recordable USB devices" on the back page for a list of USB devices that can be connected to this unit.
* Files with copyright protection (Digital Rights Management) cannot be played on this unit.

1 Press USB 22 on the unit.

2 Connect the USB device to the ⭠ (USB) port 20.

The blue indicator lights up and "USB MEMORY" appears in the display.

3 Press ▶II 8.

The unit starts playing.

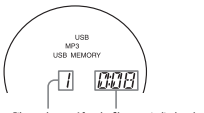

4 Press VOL + or – (or VOLUME + or – on the remote) 10 to adjust the volume.

Other operations

To	Press
Pause playback	▶II 8. To resume play, press the button again*.
Stop playback	■ 8.
Select a folder	🗀 + or – 6.
Select a file	I◀◀ or ▶▶I 7.
Find a point in a file	Hold down I◀◀ or ▶▶I 7 during playback, and release the button at the desired point (◀◀ or ▶▶ 28 on the remote).
Select Repeat Play	REPEAT 13 on the unit repeatedly until "⭾" or "⭾ 1" appears.
Remove the USB device	Hold down ■ 8 until "NO DEV" appears, then remove the USB device.

* When playing a VBR MP3 file, the unit may resume playback from a different point.

Tips
- Playback starts from the MP3/WMA file you last stopped playing (Resume play). During stop, the MP3/WMA file number and the playing time to be played are displayed.
- To cancel resume play (to start play from the beginning of the first MP3/WMA file), press ■ 8.

Note
Always hold down ■ 8 and make sure that "NO DEV" appears before removing the USB device. Removing the USB device while "NO DEV" is not displayed may corrupt the data on the USB device or damage the USB device itself.

To change the play mode

Press MODE 14 repeatedly while the USB device is not playing. You can select Normal Play ("🗀" for all files in the folder on the USB device), Shuffle Play ("SHUF" or "🗀 SHUF"), or Program Play ("PGM").

Notes on the USB device
- You cannot change the play mode during playback.
- Some time may be needed before playback starts when:
  – the folder structure is complex.
  – the USB device is close to capacity.
- When a USB device is connected, the unit reads all the files on the device. If there are many folders or files on the device, it may take a long time for the unit to finish reading them.
- Do not connect a USB device to the unit through a USB hub.
- In the case of some USB devices, when an operation is performed on the USB device, there may be a delay before it is carried out on this unit.
- This unit may not support all the functions provided on the connected USB device.
- Files recorded by this unit are played back in the order of folder creation. Files recorded by a device other than this unit (such as a computer) may not play back in the order in which they were recorded.
- The playback order on this unit may differ from the playback order on the connected USB device.
- Do not save non-MP3/WMA files or unnecessary folders to a USB device that contains MP3/WMA files.
- During playback, folders that contain no MP3/WMA files are skipped.
- This unit can play only MP3/WMA files that have the ".mp3" or ".wma" file extension.
- If there are files on the disc that have the ".mp3" or ".wma" file extension, but are not MP3/WMA files, the unit may produce noise or malfunction.
- A maximum of 999 MP3/WMA files and 255 folders can be contained on a single USB device.
  The maximum number of MP3/WMA files and folders may vary, depending on the file and folder structure.
- Compatibility with all MP3/WMA encoding/writing software, recording devices, and recording media cannot be guaranteed. If you use an incompatible USB device, the sound skipping or noise may be produced, or the device may not play at all.

Recording from a disc to a USB device

By connecting a USB device (digital music player or USB storage media) to the ⭠ (USB) port 20 on the unit, you can record music from a disc to the USB device.
This unit supports recording from CD-DA and MP3/ WMA discs only. Sound from this unit's cassette player or radio cannot be recorded to a USB device.
Audio files are recorded on this unit in the MP3 or WMA format.
The approximate recording size is about 1 MB per minute of recording time from a CD. The file size may be larger for recordings made from an MP3/WMA disc.
See "Playable/Recordable USB devices" on the back page for a list of the USB devices that can be connected to this unit.

Synchro Recording

This function allows you to easily record an entire disc onto a USB device.

1 Connect a USB device with recording capability to the ⭠ (USB) port 20.

If a USB cable is necessary, use the USB cable supplied with the device to be connected.

Refer to the operation manual supplied with the USB device for connection details.

2 Press CD 3 and insert the disc that you want to record.

3 When the CD player is stopped, press MODE 14 repeatedly to select the play mode.

The play mode automatically changes to Normal Play if the unit is in Shuffle Play, Repeat Play or Program Play (with no tracks or MP3/WMA files programmed) at the start of recording.

For details about play modes, see "To change the play mode" in "Listening to music of a USB device".

4 Press REC CD ► USB 19 on the unit.

"REC" flashes and the display cycles through "CD SYNC", "FREExxxM"* (free space on the USB device), and "PUSH ENT".

The red indicator blinks.

The USB device changes to recording standby and the unit to play pause.

* If the amount of free space is in the gigabyte range, "FREExxxG" will be displayed as the unit.

5 Press ENTER 18 on the unit.

Recording starts. The red indicator stops blinking and turns on during the recording. The unit and the USB device automatically stop when the recording is completed.

REC1 Recording

This procedure allows you to easily record the currently playing track or MP3/WMA file to a USB device.

1 Connect a USB device with recording capability to the ⭠ (USB) port 20.

2 Press CD 3 and insert the disc with the track or MP3/WMA file that you want to record.

3 Select the track or MP3/WMA file and start playing it.

4 Press REC CD ► USB 19 on the unit while the selected track or MP3/WMA file is playing.

"REC" flashes and the display cycles through "REC 1", "FREExxxM"* (free space on the USB device) and "PUSH ENT". The USB device changes to recording standby and the unit to play pause.

* If the unit of the free space capacity is giga-byte, "FREExxxG" will be displayed.

5 Press ENTER 18 on the unit.

Recording starts. When recording is completed, the CD player continues to play.

To stop recording

Press ■ 22.

The red indicator turns off.

To remove the USB device

1 Press USB 22 when the unit is stopped playing.

2 Hold down ■ 8 on the unit until "NO DEV" appears.

3 Remove the USB device.

To erase MP3/WMA files or folders on a USB device

You can erase MP3/WMA files or folders that are on a USB device.

1 Connect a USB device with recording capability to the ⭠ (USB) port 20.

2 Press USB 22 on the unit.

3 Press 🗀 + or – 6 repeatedly to select a folder, or press ⏮ or ⏭ 7 repeatedly to select a MP3/WMA file.

4 Press ERASE/MEMORY SELECT 17 on the unit.

"ERASE" appears on the display.

When you erase a track, "TRACK" appears, followed by "ERASE?"

When you erase a folder, "FOLDER" appears, followed by "ERASE?"

To cancel the erase operation, press ■ 8.

5 Press ENTER 18 on the unit.

The red indicator blinks and the selected MP3/WMA file or folder is erased.

The red indicator turns on while erasing and then turns off when complete.

To select the recording destination on a USB device

If a USB device has more than one memory (for example, internal memory and a memory card), you can select which memory to read to and then start recording.

1 Connect a USB device to the ⭠ (USB) port 20.

2 Press USB 22 on the unit.

3 Press ERASE/MEMORY SELECT 17 on the unit, in stop mode.

"SELECT?" appears. If an audio file or a folder is selected, "ERASE?" appears instead. Press ERASE/MEMORY SELECT 17 again to select "SELECT?"

4 Press ENTER 18 on the unit.

The name of the memory appears.

The displayed name varies depending on the specifications of the USB device.

5 Press ⏮ or ⏭ 7 repeatedly to select the memory.

Proceed to step 6 if only one memory can be selected.

To cancel this operation, press ■ 8.

6 Press ENTER 18 on the unit.

7 Start recording by following steps 2 to 5 of "Synchro Recording" or "REC1 Recording."

Folder and file generation rules

When a recording operation is first performed on a USB device, a "MUSIC" folder is created directly below the "ROOT". Folders and files are generated within this "MUSIC" folder as follows, according to the recording method.

Synchro Recording[1)]

Recording source	Folder name	File name
MP3/WMA	Same as the recording source[2)]	
CD-DA	"FLDR001"[3)]	"TRACK001"[4)]

REC1 recording

Recording source	Folder name	File name
MP3/WMA	"REC1"[5)]	Same as the recording source[2)]
CD-DA		"TRACK001"[4)]

1) In Program Play, the folder name is "FLDRxxx", and the file name depends on the recording source (CD-DA disc or MP3/WMA disc). For details about play modes, see "To change the play mode" in "Listening to music on a USB device".
2) Up to 32 characters of the name are assigned.
3) Folder names are assigned in sequential order up to a maximum of 255 (including root and MUSIC).
4) File names are assigned in sequential order.
5) A new file is recorded to the "REC1" folder each time REC1 recording is performed.

Notes

- Do not remove the USB device during recording or erase operations. Doing so may corrupt the data on the USB device or damage the USB device itself.
- Do not connect a USB device to the unit through a USB hub.
- When recording from a CD, the tracks are recorded as MP3 files at 128 kbps. When recording from an MP3/WMA disc, MP3/WMA files are recorded with the same bit rate as the original MP3/WMA files.
- While recording from an MP3/WMA disc, no sound is output and "HI-SPEED" appears.
- CD text information is not included in the MP3/WMA files.
- If you cancel a recording before it is completed, an MP3/WMA file is created with the contents up to the point the recording was stopped.
- Recording stops automatically if:
  – the USB device runs out of space during recording, or
  – the number of MP3/WMA files on the USB device reaches the limit that the unit can recognize.
- A maximum of 999 MP3/WMA files and 255 folders can be contained on a single USB device. (including root and MUSIC). The maximum number of MP3/WMA files and folders may vary, depending on the MP3/WMA file and folder structure.
- You cannot erase MP3/WMA files and folders in Shuffle Play or Program Play.
- If a folder to be erased contains non-MP3/WMA format files or sub folders, these are not erased.
- If a folder or file with the same name as the one you are trying to record already exists on the USB device, a sequential number is added after the name for the newly recorded folder or file to avoid overwriting the existing one.
- When recording tracks from an MP3/WMA disc to a USB device, there is no sound output.

• Other Operations

Using the display

You can check information about the CD using the display.

Checking the information of an audio CD

To check the total track number and playing time of the CD

Press ■ 8 while the CD is stopped, and you can check them in the display.

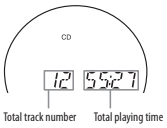

Checking the information of an MP3/WMA disc

To check the total folder number and total file number on the CD

Press ■ 8 while the CD is stopped, and you can check them in the display.

MP3/WMA disc (Example: When you place MP3 disc)

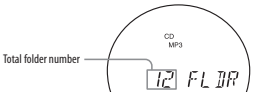

To check file information

Press DSPL/ENT 24 on the unit while playing an MP3/WMA disc. The display changes as follows:

→ The song title (♫) *
↓
The artist name (👤)
↓
The album name (🗀) *
↓
The current file number and playing time**

* If the file does not have ID3 information, the file name or folder name appears in the display.
** Artist name or album name will change to this in a few seconds.

Playing tracks/MP3/WMA files repeatedly (Repeat Play)

You can play tracks/MP3/WMA files repeatedly in normal, Shuffle or Program play modes.

1 Press CD 3.

"CD" appears in the display.

2 Proceed as follows.

To repeat	Do this
A single track/MP3/WMA file	1 Press REPEAT 13 until "⟲ 1" appears. 2 Press ⏮ or ⏭ 7 to select the track/MP3/WMA file that you want to repeat. 3 Press ►II 8 on the unit.
All tracks/MP3/WMA files on the CD	1 Press REPEAT 13 until "⟲" appears. 2 Press ►II 8 on the unit.
A selected folder (MP3/WMA disc only)	1 Press MODE 14 until "🗀" appears, and then press REPEAT 13 until "⟲" appears. 2 Select the folder by pressing 🗀 + or 🗀 – 6. 3 Press ►II 8 on the unit.
Tracks/MP3/WMA files in random order	1 Select Shuffle Play (see "Playing tracks/MP3/WMA files in random order"). 2 Press REPEAT 13 until "SHUF" and "⟲" appear. 3 Press ►II 8 on the unit.
MP3/WMA files in a selected folder in random order (MP3/WMA disc only)	1 Start Folder Shuffle Play (see "Playing tracks/MP3/WMA files in random order"). 2 Press REPEAT 13 on the unit until "⟲", "SHUF" and "🗀" appear. 3 Press ►II 8 on the unit.
Programed tracks/MP3/WMA files	1 Program tracks/MP3/WMA files (see "Creating your own program"). 2 Press REPEAT 13 until "⟲" and "PGM" appear. 3 Press ►II 8 on the unit.

On the remote

Use ► 8 instead of ►II 8.

To cancel Repeat Play

Press REPEAT 13 until "⟲" disappears from the display.

Playing tracks/MP3/WMA files in random order (Shuffle Play)

You can play tracks/MP3/WMA files in random order. When playing an MP3/WMA disc, you can also play MP3/WMA files in a selected folder in random order (Folder Shuffle Play).

1 Press CD 3.

"CD" appears in the display.

2 Press MODE 14 until "SHUF" appears in the display.

When you select Folder Shuffle Play (MP3/WMA disc only), press MODE 14 on the unit until "🗀" and "SHUF" appear in the display. Then press 🗀 TUNE + or – 6 on the unit to select a folder you want.

3 Press ►II 8 on the unit to start Shuffle Play.

On the remote

Use ► 8 instead of ►II 8.

To cancel Shuffle Play

Stop playing first. Then press MODE 14 until "SHUF" disappears from the display.

Tips

- During Shuffle Play, you cannot select the previous track/MP3/WMA file by pressing ⏮ 7.
- The resume function does not work during Shuffle Play.

Creating your own program (Program Play)

You can arrange the playing order of up to 25 tracks/MP3/WMA files on a CD.

1 Press CD 3.

"CD" appears in the display.

2 Press MODE 14 until "PGM" appears in the display.

3 Press ⏮ or ⏭ 7 then press DSPL/ENT 24 on the unit (ENTER 29 on the remote) for the tracks/MP3/WMA files you want to program in the order you want.

For MP3/WMA files, press 🗀 TUNE + or – 6 first and then press ⏮ or ⏭ 7 and DSPL/ENT 24 (ENTER 29 on the remote).

After programming the first track, "STEP 1" appears, followed by the selected track/MP3/WMA file.

Each time you add a track/MP3/WMA file, a step number is added.

The total time of the program play will be displayed up to "99:59" for the CD (If the total time count becomes more than 99:59, "--:--" will be displayed. For MP3/WMA, "--:--" will be always displayed.)

Audio CD (Program Play)

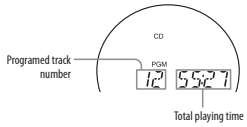

MP3/WMA disc (Program Play) (Example: When you place MP3 disc)

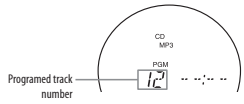

4 Press ►II 8 on the unit to start Program Play.

On the remote

Use ► 8 instead of ►II 8.

To cancel Program Play

Stop playing first. Then press MODE 14 until "PGM" disappears from the display.

To delete the last track or file of the program

Press CLEAR 27 on the remote while the CD is stopped.

To delete the current program

Press POWER 1 twice.

The current program will also be cleared when you push the CD lid OPEN/CLOSE 9 to open.

Then create a new program following the programming procedure.

Tips

- If you try to program 26 tracks/MP3/WMA files or more, "FULL" will appear in the display.
- You can play the same program again, since the program is saved until you open the CD compartment or turn off the power of the unit.
- You can record your own program. After you have created the program, insert a blank tape and press ● 2 on the unit to start recording.
- The resume function does not work during Program Play.

Presetting radio stations

You can store radio stations into the unit's memory. You can preset up to 30 radio stations, 20 for FM and 10 for AM in any order.

1 Press RADIO/BAND•AUTO PRESET 5 on the unit to select the band.
2 Hold down RADIO/BAND•AUTO PRESET 5 on the unit for 2 seconds until "AUTO" flashes in the display.
3 Press DSPL/ENT 24 on the unit.
The stations are stored in memory from the lower frequencies to the higher ones.

If a station cannot be preset automatically

You need to preset a station with a weak signal manually.

1 Press RADIO/BAND•AUTO PRESET 5 on the unit to select the band.
2 Tune in a station you want.
3 Hold down DSPL/ENT 24 on the unit for 2 seconds until the preset number flashes in the display.
4 Press PRESET + or – 7 on the unit until the preset number you want for the station flashes in the display.
5 Press DSPL/ENT 24 on the unit.
The new station replaces the old one.

On the remote

1 Press RADIO/BAND 5 until the band you want appears in the display.
2 Tune in a station you want.
3 Hold down ENTER 29 for 2 seconds until the preset number flashes in the display.
4 Press PRESET + or – 7 until the preset number you want for the station flashes in the display.
5 Press ENTER 29.

Tip

The preset radio stations remain in memory even if you unplug the AC power cord or remove the batteries.

Playing preset radio stations

1 Press RADIO/BAND•AUTO PRESET 5 on the unit to select the band.
2 Press PRESET + or – 7 on the unit to tune in the stored station.

On the remote

1 Press RADIO/BAND 5.
2 Press PRESET + or – 7 to tune in the stored station.

Falling asleep to music

1 Play the music source you want.
2 Press SLEEP 23 to display "SLEEP".
3 Press SLEEP 23 to select the minutes until the unit goes off automatically.
Each time you press the button, the indication changes as follows:
"AUTO*" → "60MIN" → "30MIN" → "20MIN" → "10MIN" → "OFF".
* When you select "AUTO", the CD, USB or tape stops playing in 90 minutes at most and the unit goes off automatically. When you are listening to the radio, the radio goes off in 90 minutes.
If 4 seconds have passed after you pressed SLEEP 23, the minutes in the display are entered.
When the setting becomes effective, the LCD backlight will be dimmer and the Woofer LED will turn off.
When the preset time has passed, the unit goes off automatically.

To cancel the sleep function

Press POWER 1 to turn off the power.

Note

When you are playing a tape using this function:
If the tape length of one side is longer than the set time, the unit will not go off until the tape reaches the end.

Playable/Recordable USB devices

You can use the following Sony USB devices on this unit. Other USB devices are not playable/recordable on this unit.

Verified Sony digital music players (as of September 2008)

Product name	Model name	Series name
Walkman®	NWD-	B100/B110F/E020F
	NWZ-	A810/A820K/B130F/E430F/S510/S610F/S630F/S710F/S730F
Walkman® Phone	W880i/W850/W710/W660/W580	
	W910	

Check the websites below for the latest information about compatible devices.
For customers in Europe:
<http://support.sony-europe.com/>
For customers in Latin America:
<http://www.sony-latin.com/pa/info>
For customers in Asia and Oceania:
<http://www.sony-asia.com/section/support>

Notes

- When formatting the above models, be sure to format using the model itself or the dedicated formatting software for that model.
- Do not use any other than these USB devices. Operation of models not listed here is not guaranteed.
- Operation may not always be ensured even when using these USB devices.
- Some of these USB devices may not be available for purchase in certain areas.
- Playback of WMA/AAC files with copyright protection is not supported.
- Files downloaded from a music download website may not be played.
- Connection through a hub is not supported.

Connecting optional components

You can enjoy the sound from an optional component such as a portable digital music player through the speakers of this unit.
Be sure to turn off the power of each component before making any connections.
For details, refer to the instruction manual of the component to be connected.

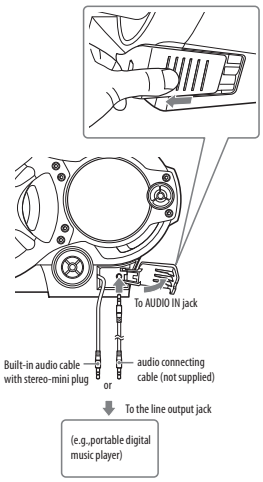

1 Connect the built-in audio cable with stereo-mini plug 12 on the unit to the line output jack of the portable digital music player or other components*.
2 Turn the unit and the connected component on.
3 Press AUDIO IN 15 on the unit and start playing sound on the connected component.
The sound from the connected component is output from the speakers.

* To connect the unit to a TV or VCR, use an extension cable (not supplied) with a stereo-mini jack on one end (for the built-in audio cable) and two phono plugs on the other end.

Recording the sound from the connected component

1 Insert a blank tape.
2 Press AUDIO IN 15 on the unit to display "AUDIO IN".
3 Press ● 2 on the unit.
Recording starts.
4 Play the optional component connected to the unit.

Tip

Should the built-in audio cable 12 become damaged, you can use the AUDIO IN jack 11 to connect an optional component to the unit. Use an audio connecting cable (not supplied) with a stereo mini plug on one end (for the AUDIO IN jack 11). Make sure the plug on the other end is suited to the jack on the optional component; for example, a stereo-mini plug for a portable digital music player, or two phono plugs for a TV or VCR.

Notes

- Do not pull forcibly on the built-in audio cable 12. Doing so may cause the plug to rip off.
- Connect the built-in audio cable 12 or audio connecting cable (not supplied) securely to prevent any malfunction.
- It is not possible to listen to two components connected at the same time through the built-in audio cable 12 and the AUDIO IN jack 11 (using an optional audio connecting cable). Connect one component at a time.

SECTION 3
DISASSEMBLY

- This set can be disassembled in the order shown below.

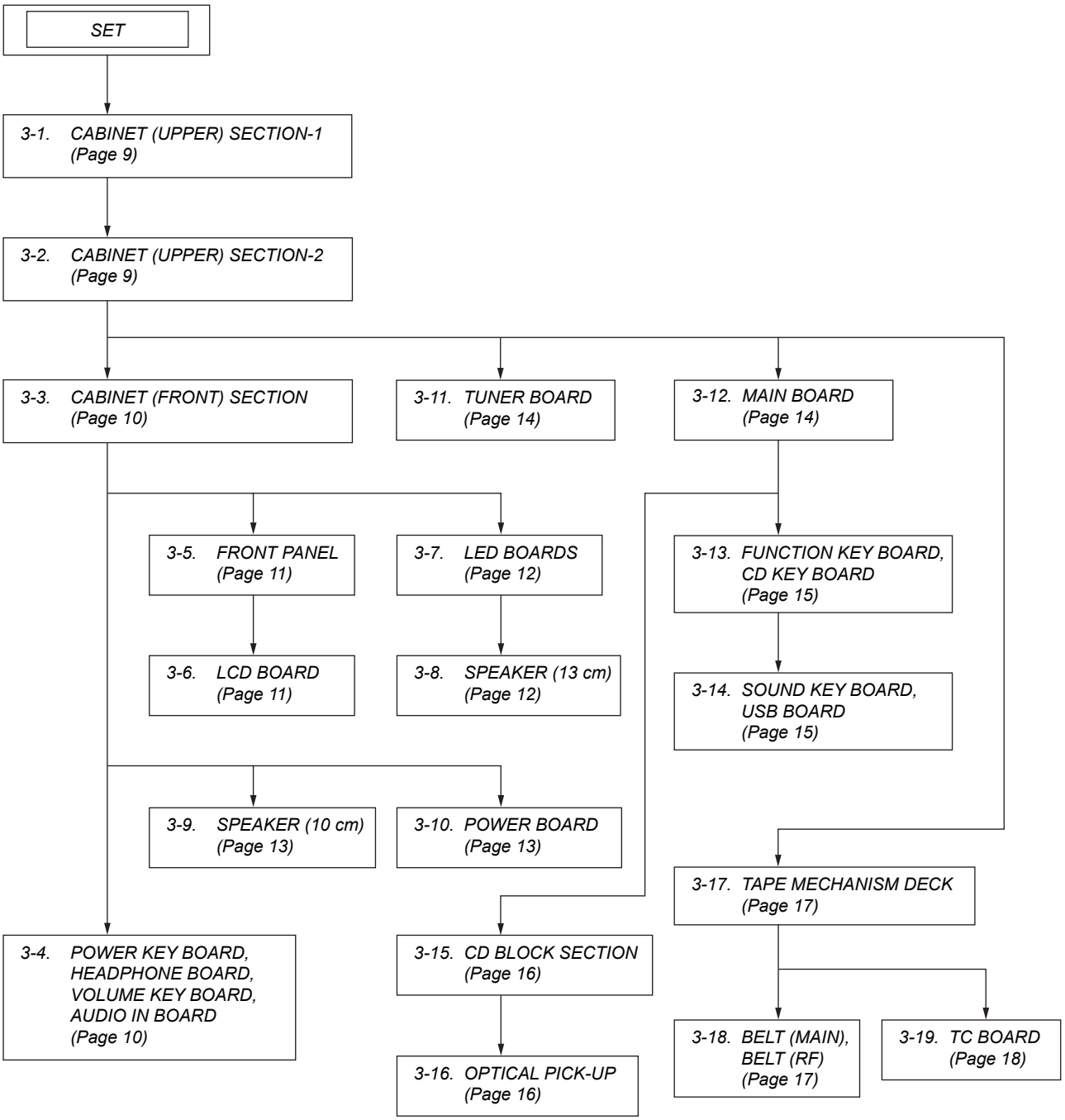

Note: Follow the disassembly procedure in the numerical order given.

3-1. CABINET (UPPER) SECTION-1

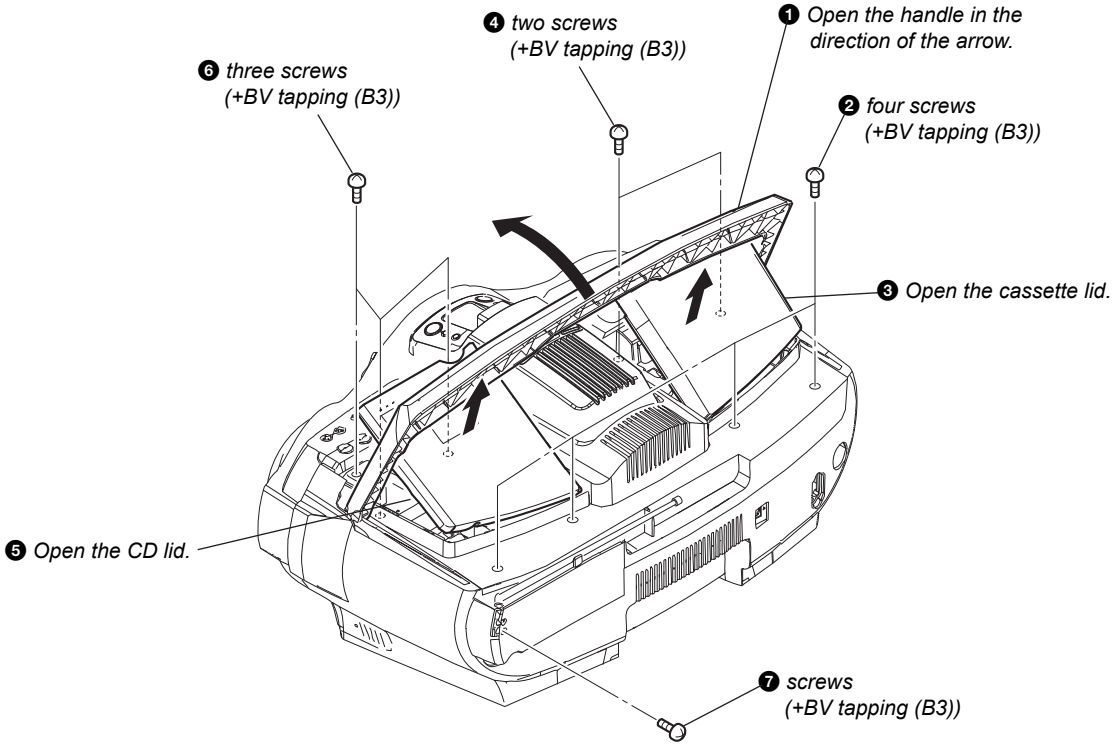

3-2. CABINET (UPPER) SECTION-2

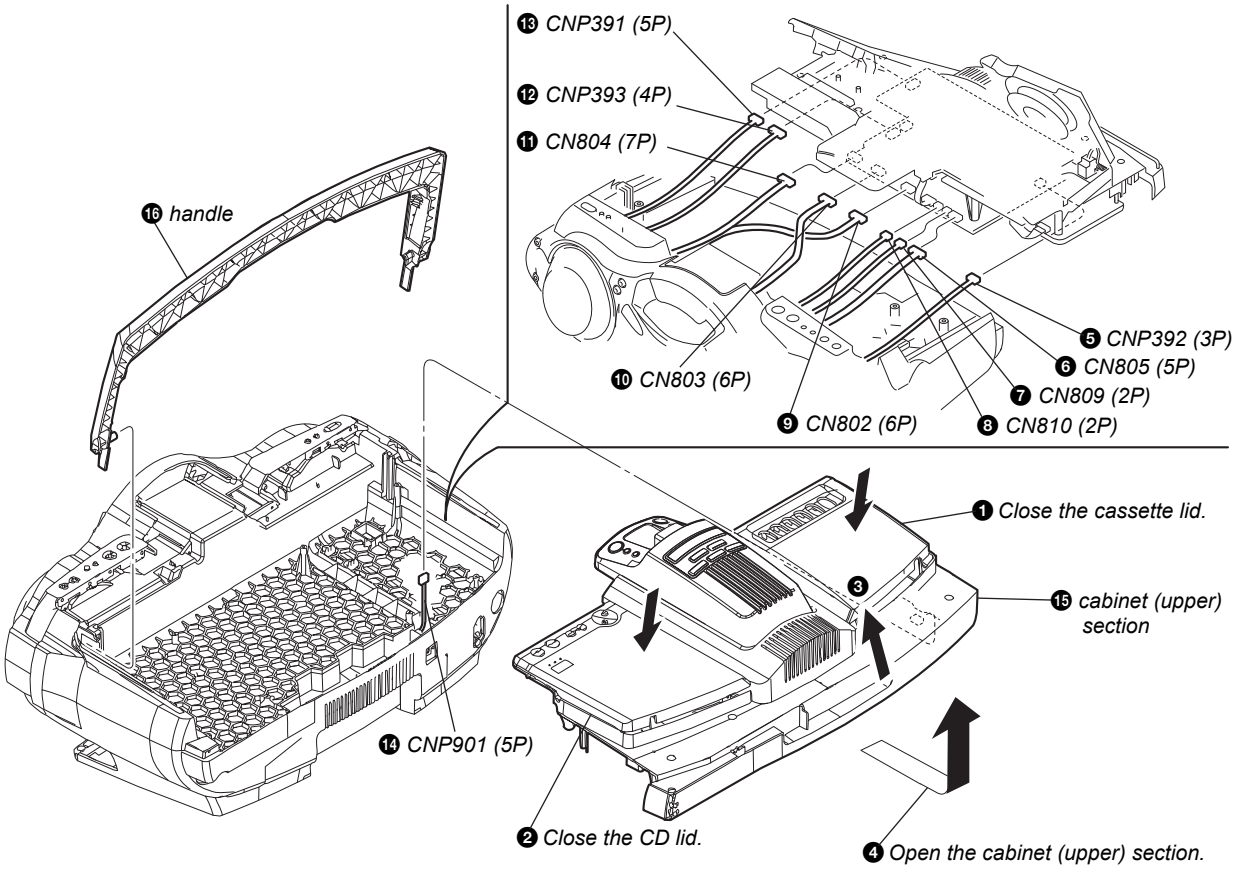

3-3. CABINET (FRONT) SECTION

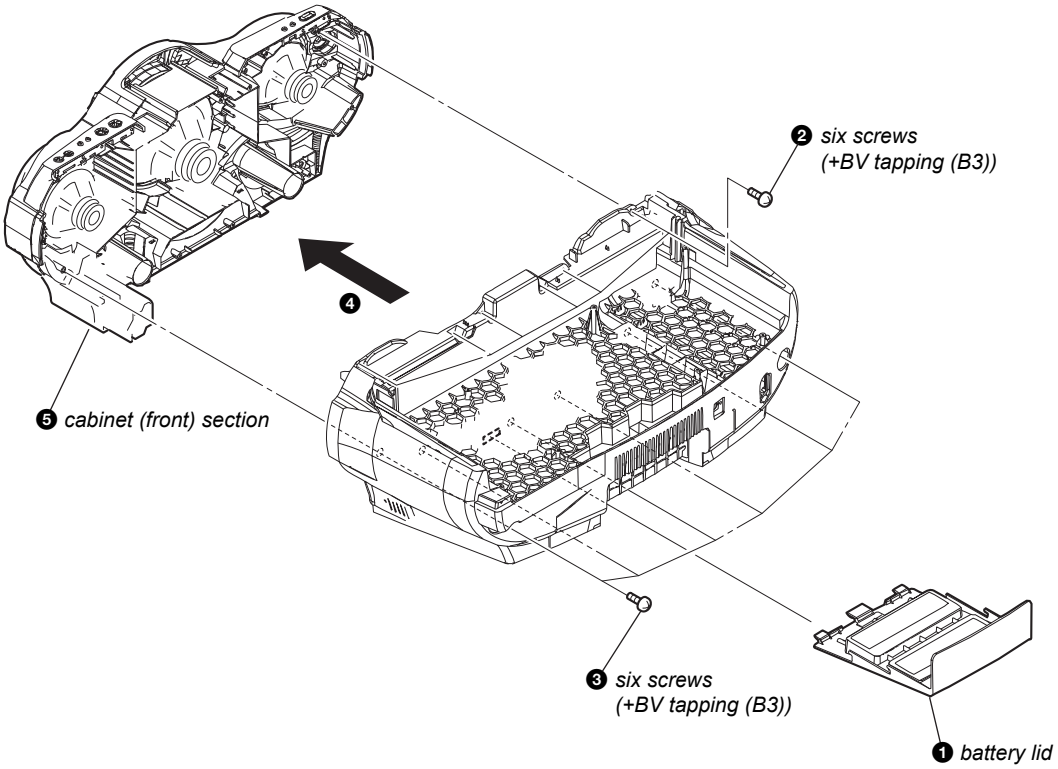

3-4. POWER KEY BOARD, HEADPHONE BOARD, VOLUME KEY BOARD, AUDIO IN BOARD

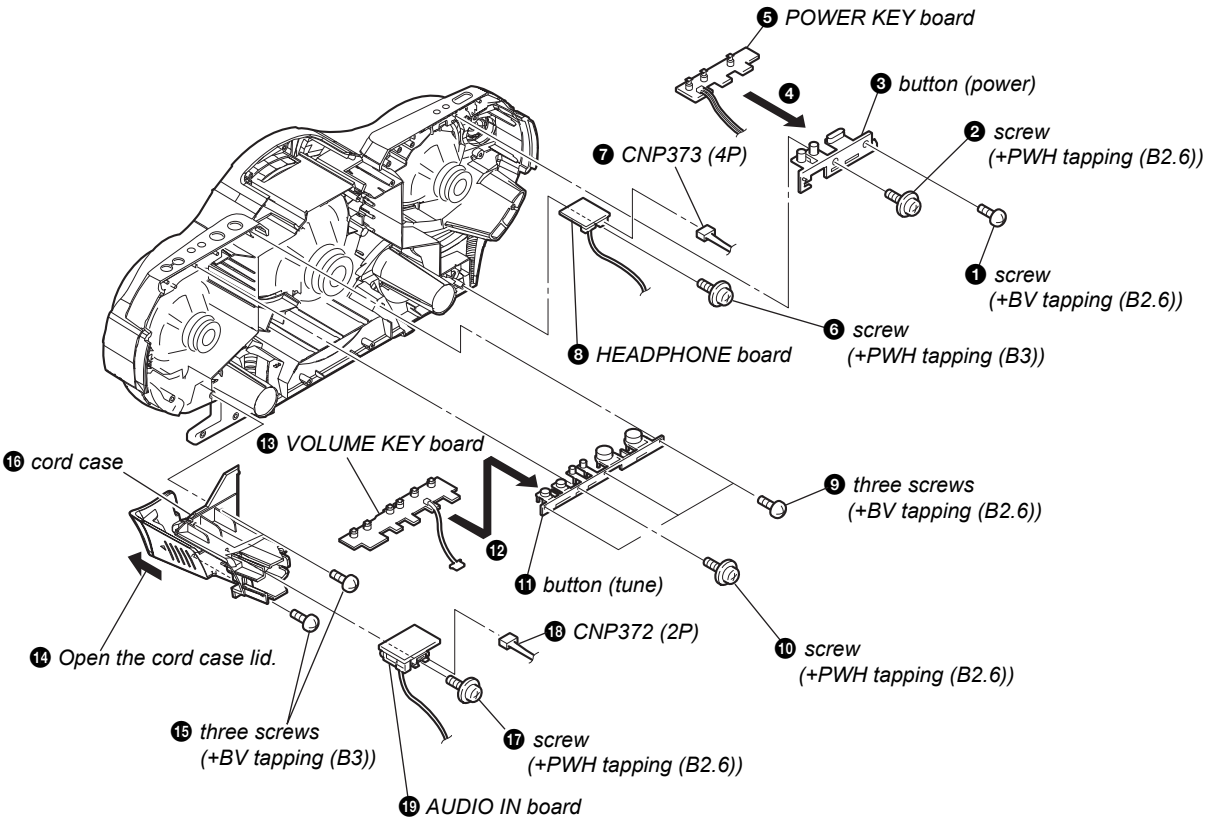

3-5. FRONT PANEL

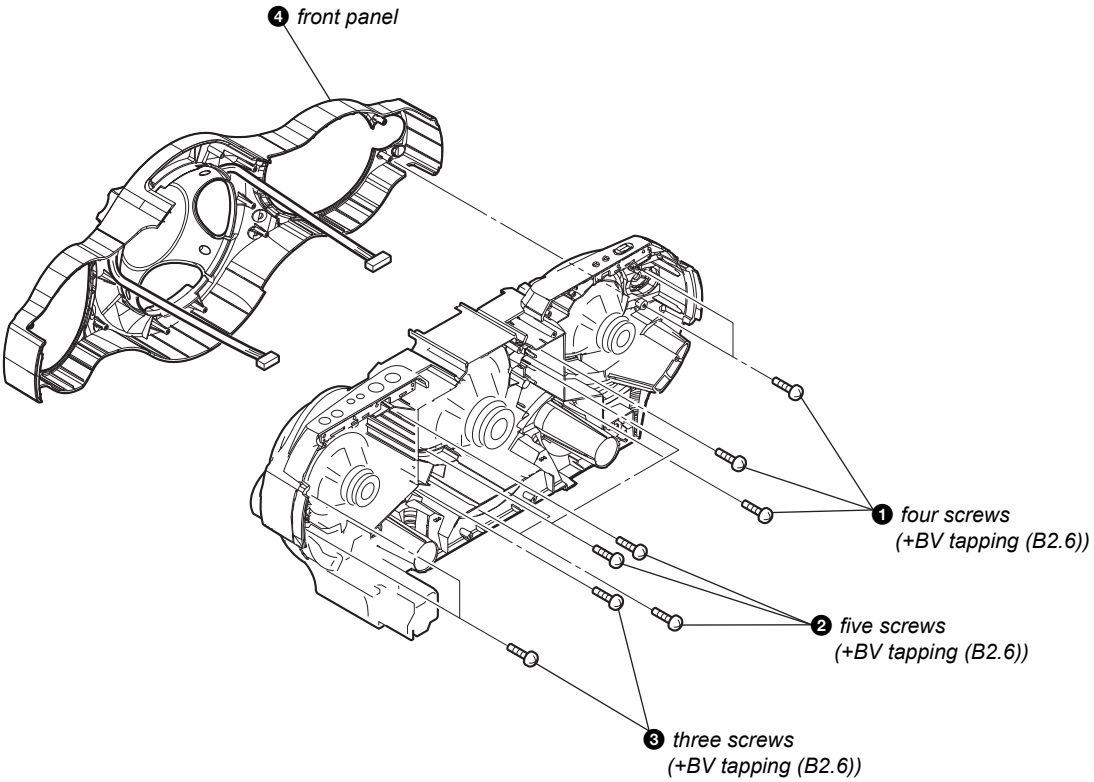

3-6. LCD BOARD

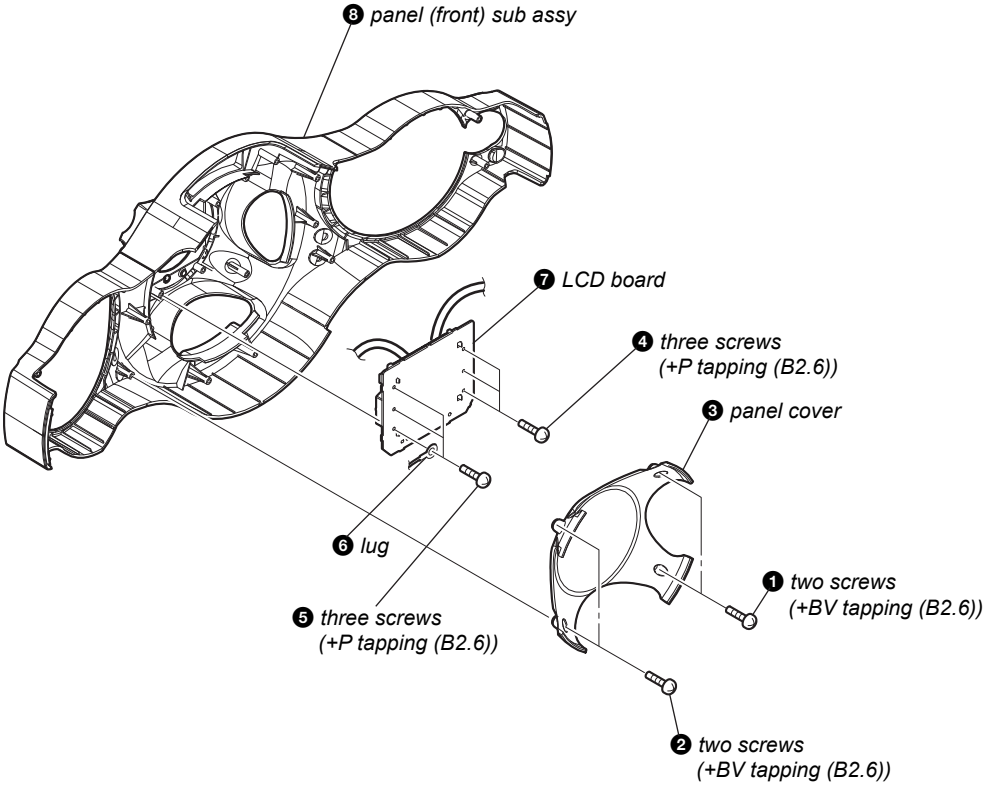

3-7. LED BOARDS

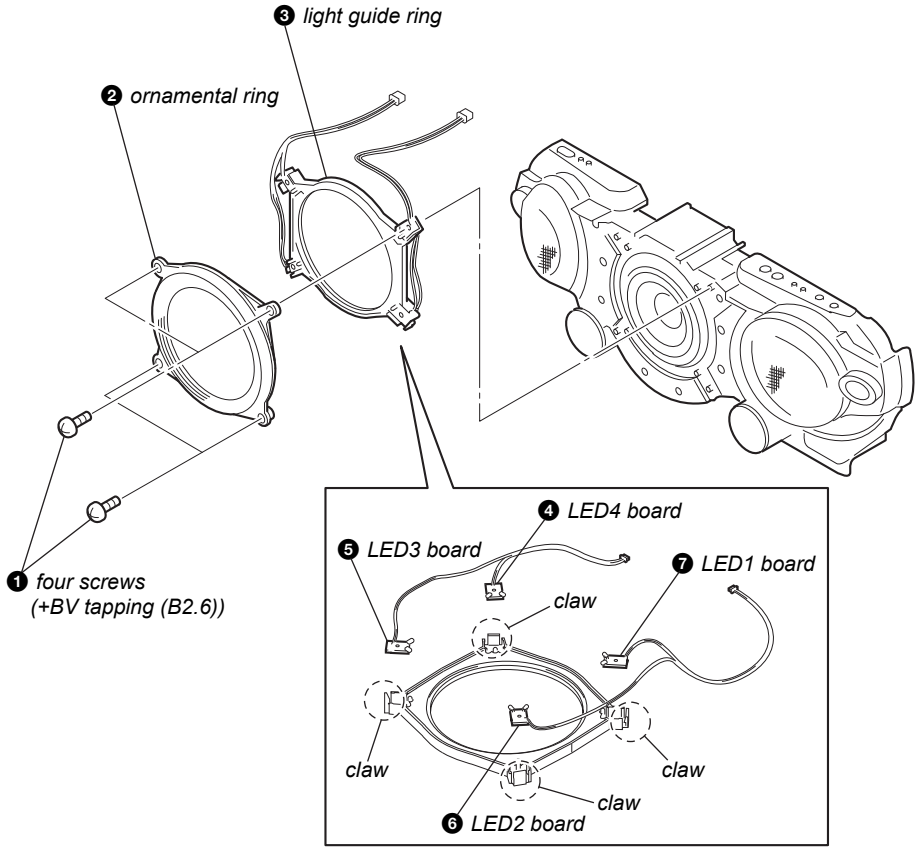

3-8. SPEAKER (13 cm)

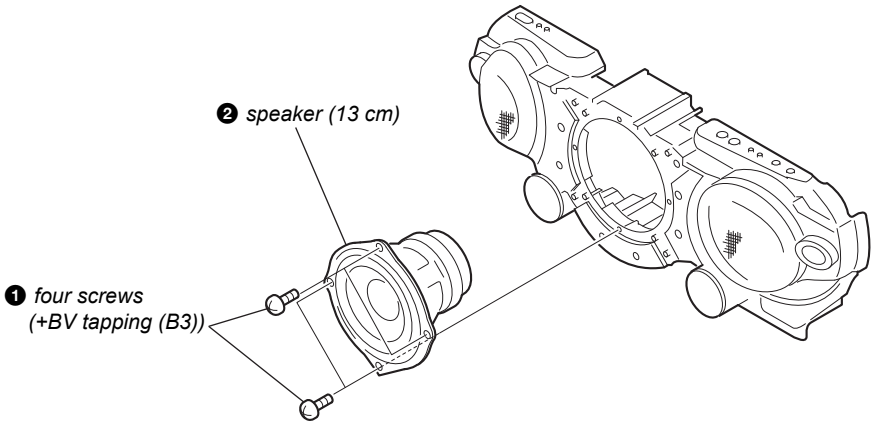

3-9. SPEAKER (10 cm)

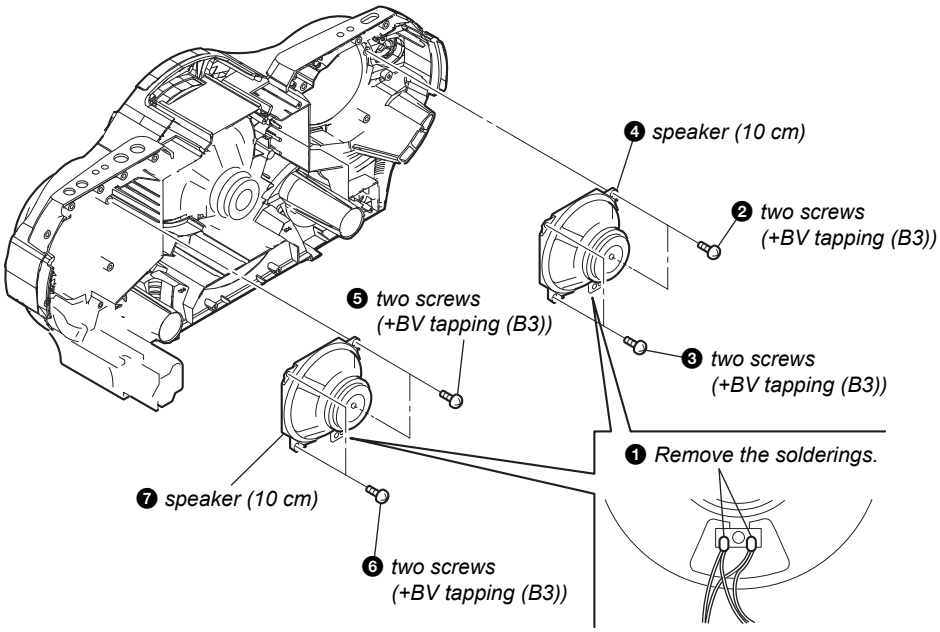

3-10. POWER BOARD

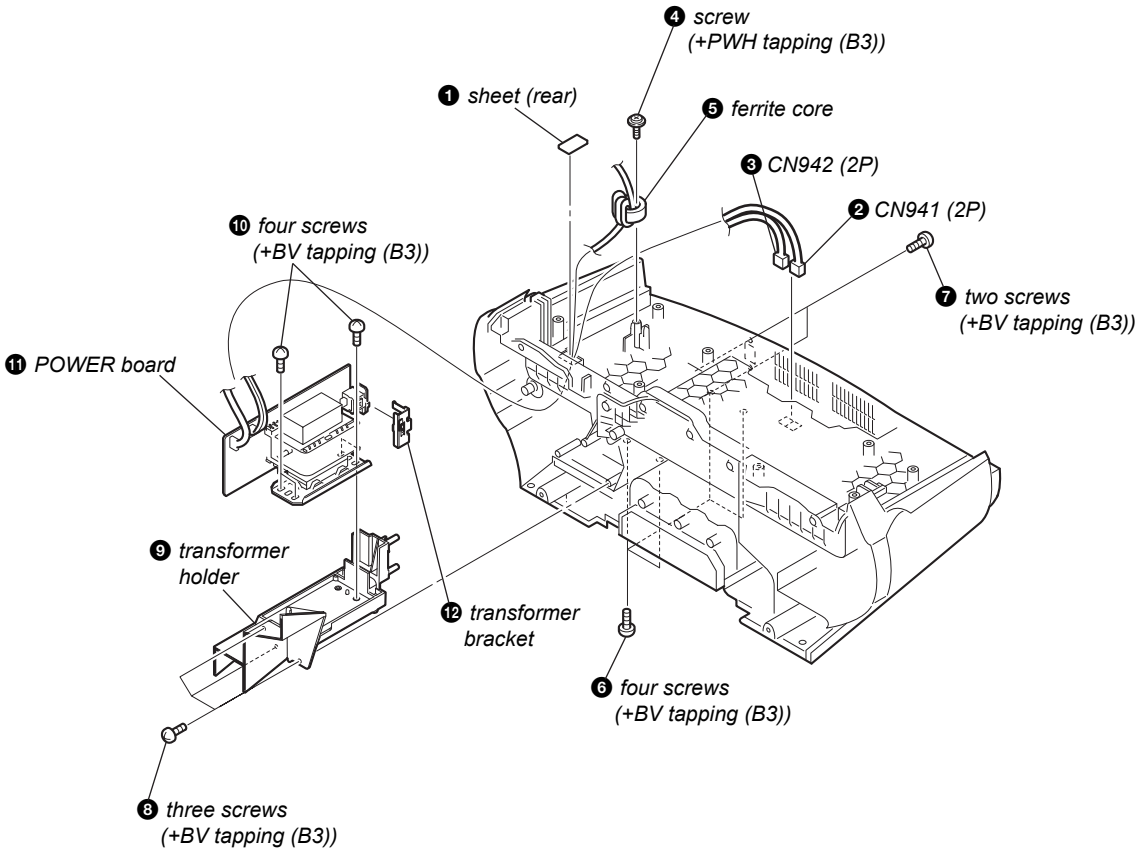

3-11. TUNER BOARD

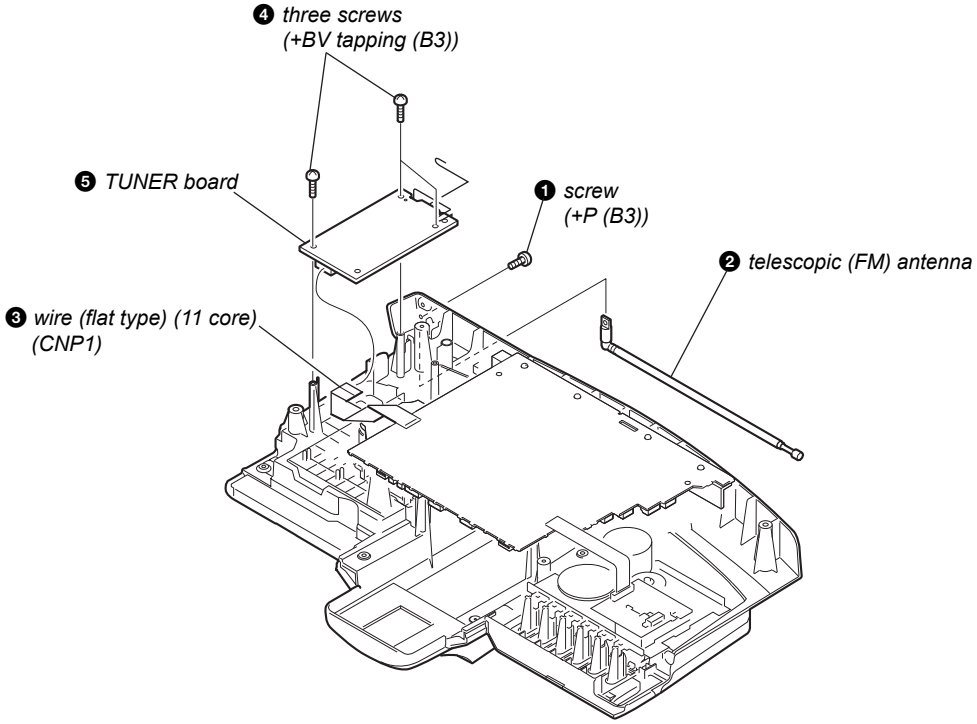

3-12. MAIN BOARD

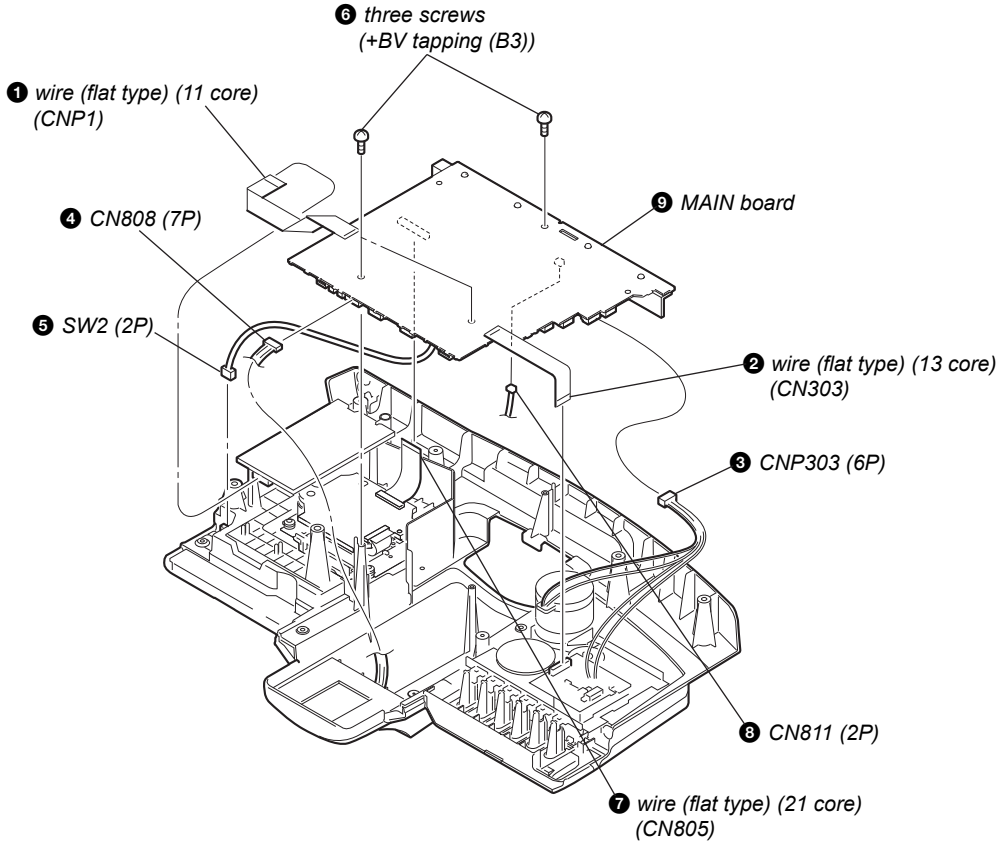

3-13. FUNCTION KEY BOARD, CD KEY BOARD

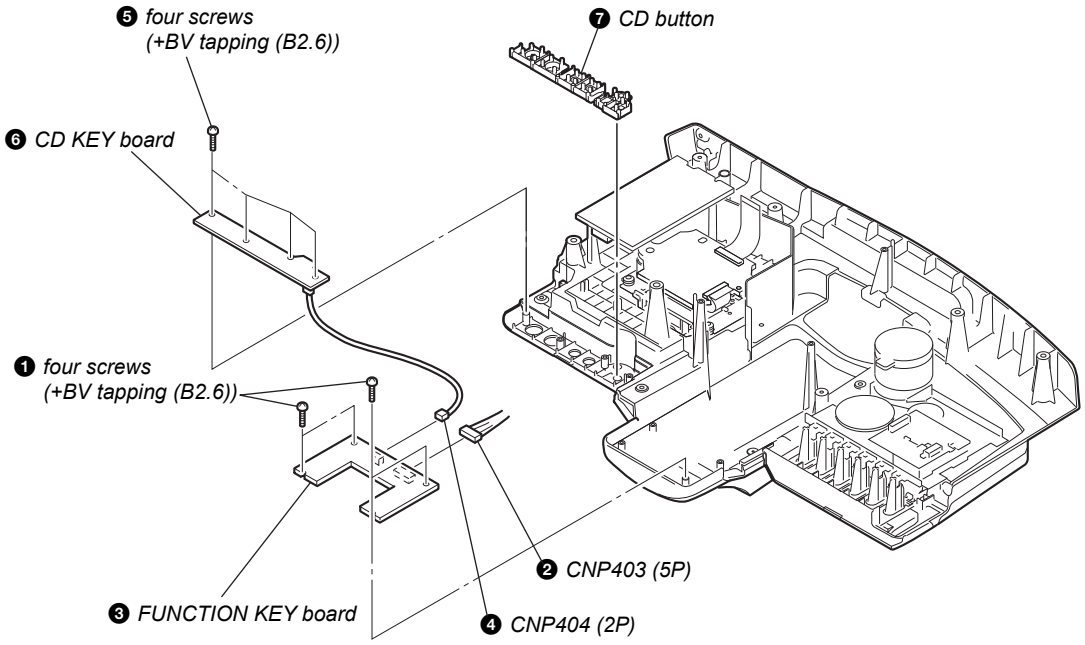

3-14. SOUND KEY BOARD, USB BOARD

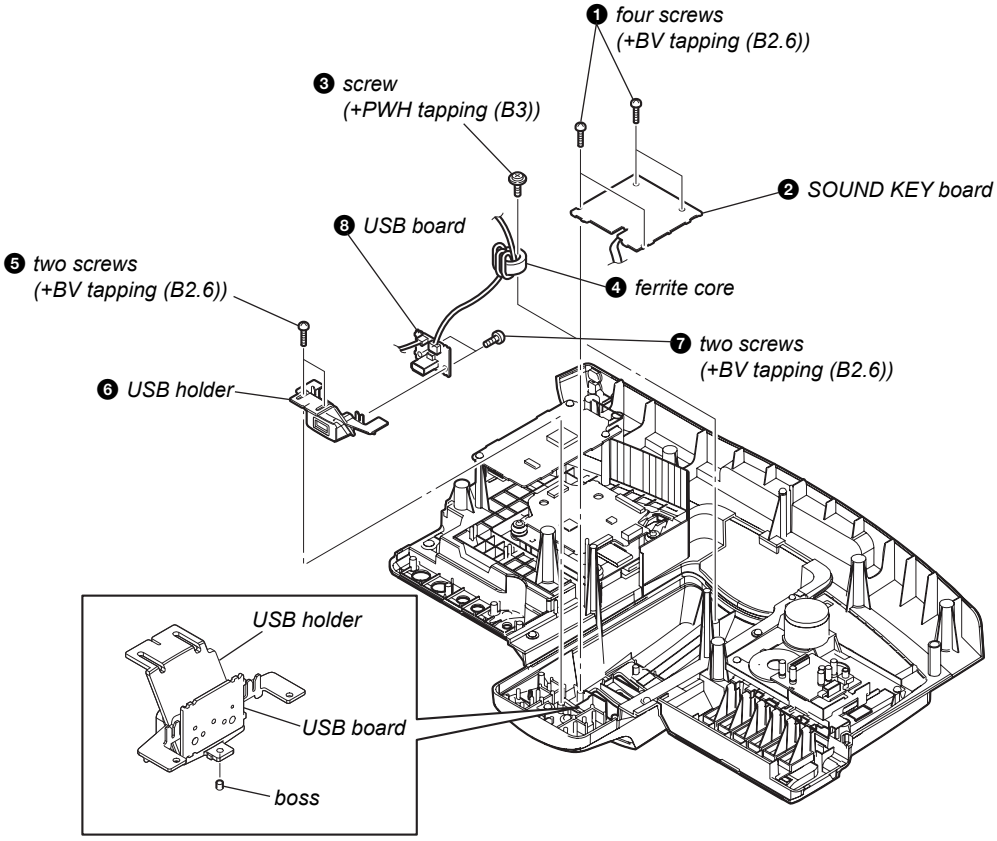

3-15. CD BLOCK SECTION

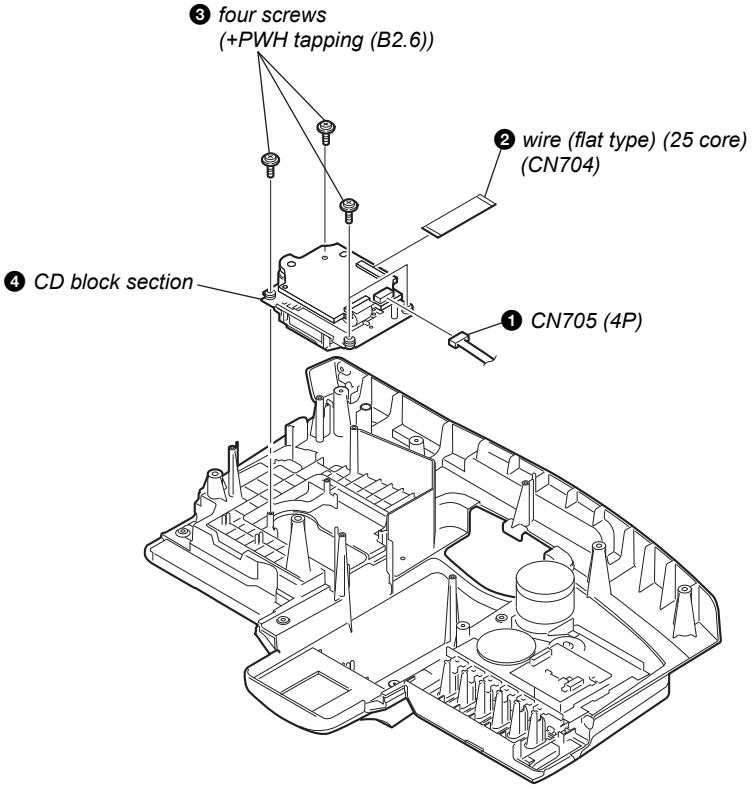

3-16. OPTICAL PICK-UP

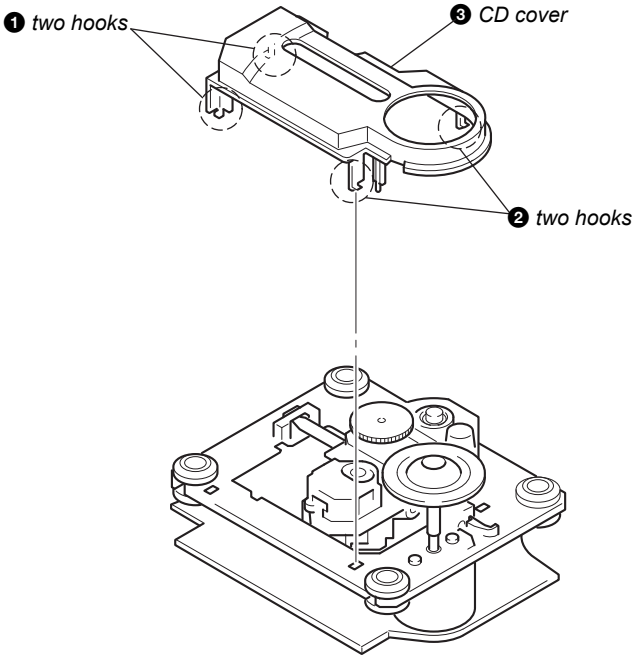

3-17. TAPE MECHANISM DECK

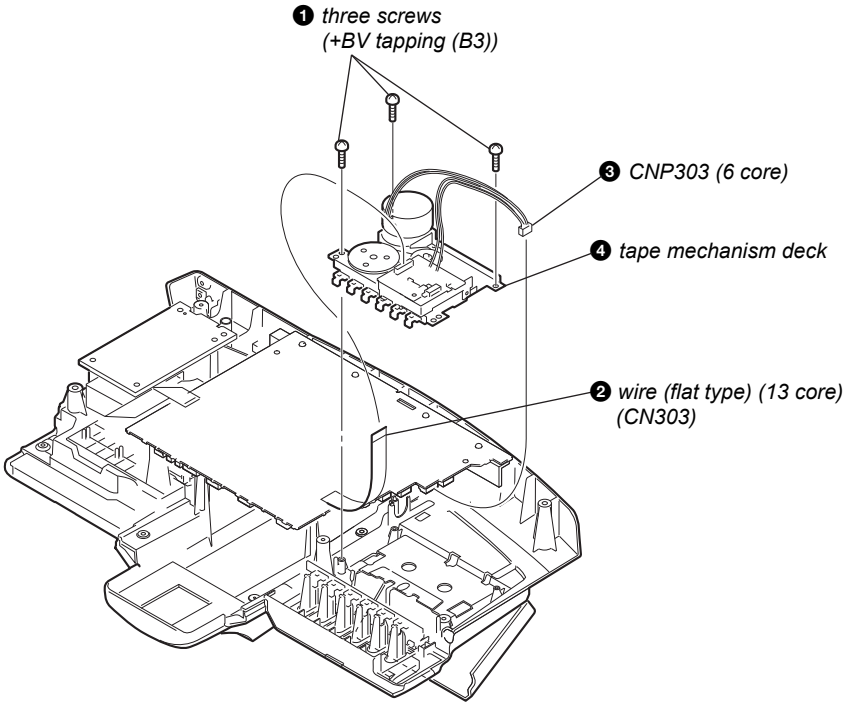

3-18. BELT (MAIN), BELT (RF)

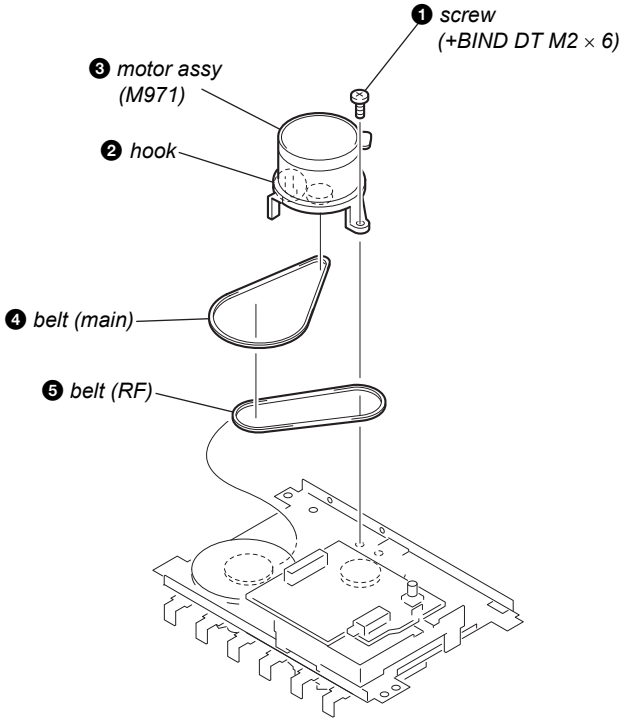

3-19. TC BOARD

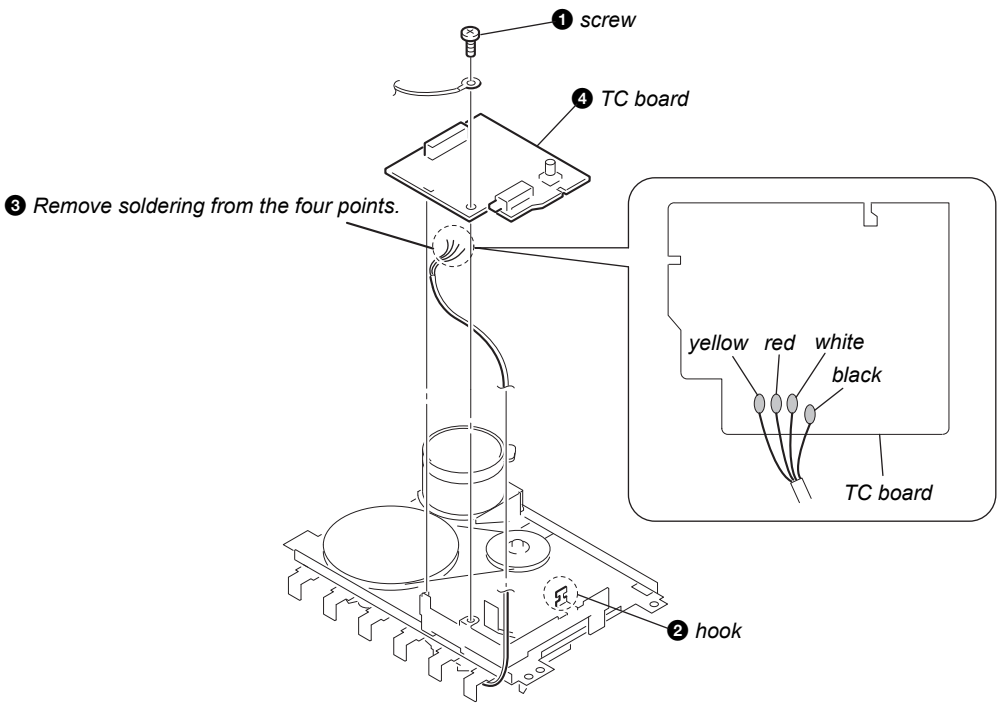
❶ screw
❹ TC board
❸ Remove soldering from the four points.
yellow
red
white
black
TC board
❷ hook

SECTION 4
TEST MODE

[MC COLD RESET]

The cold reset clears all data including preset data stored in the memory to initial conditions. Execute this mode when returning the set to the customer.

Procedure:

1. In the standby status, press the [POWER] button to turn the power on.
2. Press three buttons of [■], [MODE] and at last [POWER] simultaneously.
3. When "RESET" appears, the machine enters standby status.

[PANEL TEST MODE]

Enter The Panel Test Mode

Procedure:

1. In the standby status, press the [POWER] button to turn the power on.
2. Press three buttons of [REPEAT], [■], and [DSPL/ENT] simultaneously.
3. When the panel test mode is activated, LEDs and segments of LCD are all turned on.

Version Check

Procedure:

1. In the panel test mode (all LEDs and segments of LCD are turned on), press the [ROCK] button.
2. On the LCD, date and version are displayed "xxxxxxxx". For example, "0305V001".
3. From this status, press the [DANCE] button, and the destination is displayed. For example, "1024 MX2".
4. To release from this mode, press three buttons of [REPEAT], [■], and [DSPL/ENT] simultaneously.

[CHANGE-OVER THE AM TUNING INTERVAL]

The AM tuning interval can be changed over 9 kHz or 10 kHz.

Procedure:

1. Press the [POWER] button to turn the power on.
2. Press the [RADIO/BAND] button to select TUNER (AM) function.
3. Select the AM BAND mode and press the [DSPL/ENT] button for an extended time in the AM BAND state.
4. Then, press the [AUTO PRESET/RADIO/BAND] for an extended time.
5. Next, press the [PRESET +] [PRESET –] button select either 9k/10k.
6. Finally, press the [DSPL/ENT] button to set the selected step.

[CD SERVICE MODE]

This mode can move the SLED of the optical pick-up, and also can turn the optical pick-up laser power on and off.

Procedure:

1. Press the [POWER] button to turn the power on.
2. Press the [CD] button to select the CD mode.
3. Press three buttons of [■], [VOL +], and [SALSA] simultaneously.
4. It enters the CD service mode and displays "SE MODE".
5. To exit from this mode, press three buttons of [■], [VOL +], and [SALSA] simultaneously.

Key Operation:

[PRESET+ ▶▶I], [PRESET– I◀◀]:
Use these keys to move the SLED.
When [PRESET+ ▶▶I] is pressed in this mode, the SLED moves to outer circumference and the message "SL OUT" is displayed.
When [PRESET– I◀◀] is pressed in this mode, the SLED moves to inner circumference and the message "SL IN" is displayed.

[MODE] : Use this key to turn the optical pick-up laser power on and off. When the laser power is turned on, the message "LD ON" is displayed. When the laser power is turned off, the message "LD OFF" is displayed.

SECTION 5
MECHANICAL ADJUSTMENTS

Precaution

1. Clean the following parts with a denatured alcohol-moistened swab:
   record/playback heads pinch rollers
   erase head rubber belts
   capstan idlers
2. Demagnetize the record/playback head with a head demagnetizer. (Do not bring the head magnetizer close to the erase head.)
3. Do not use a magnetized screwdriver for the adjustments.
4. After the adjustments, appiy suitable locking compound to the parts adjusted.
5. The adjustments should be performed with the rated power supply voltage unless otherwise noted.

Torque Measurement

Mode	Torque meter	Meter reading
FWD	CQ-102AS	2.95 – 6.86 mN • m (30 – 70 g • cm) (0.42 – 0.97 oz • inch)
FWD back tension	CQ-102C	0.15 – 0.53 mN • m (1.5 – 5.5 g • cm) (0.021 – 0.076 oz • inch)
FF	CQ-201AS	more than 5.88 mN • m (more than 60 g • cm) (more than 0.83 oz • inch)
REW	CQ-201B	more than 5.88 mN • m (more than 60 g • cm) (more than 0.83 oz • inch)

Tape Tension Measurement

Mode	Tension meter	Meter reading
FWD	CQ-403A	more than 100 g (more than 3.53 oz)

SECTION 6
ELECTRICAL ADJUSTMENTS

CD SECTION

CD section adjustments are done automatically in this set.
In case of operation check, confirm that focus bias.

FOCUS BIAS CHECK

1. Connect the oscilloscope between IC701 pin ② and pin ⑪ (or TP (RF OUT) and TP (VC)).
2. Insert the disc (PATD-012 (Tr 15)). (Part No. : 4-225-203-01)
3. Press the [► ❚❚] (CD) button.
4. Confirm that the oscilloscope waveform is as shown in the figure below. (eye pattern)
   A good eye pattern means that the diamond shape (◊) in the center of the waveform can be clearly distinguished.

• RF signal reference waveform (eye pattern)

VOLT/DIV : 50 mV (10 : 1 probe in use)
TIME/DIV : 500 nS

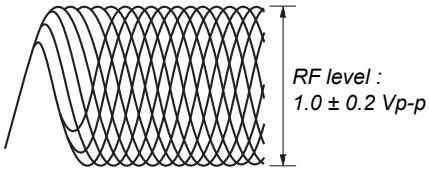

When observing the eye pattern, set the oscilloscope for AC range and raise vertical sensitivity.

Test Point:

– CD BOARD (Conductor Side) –

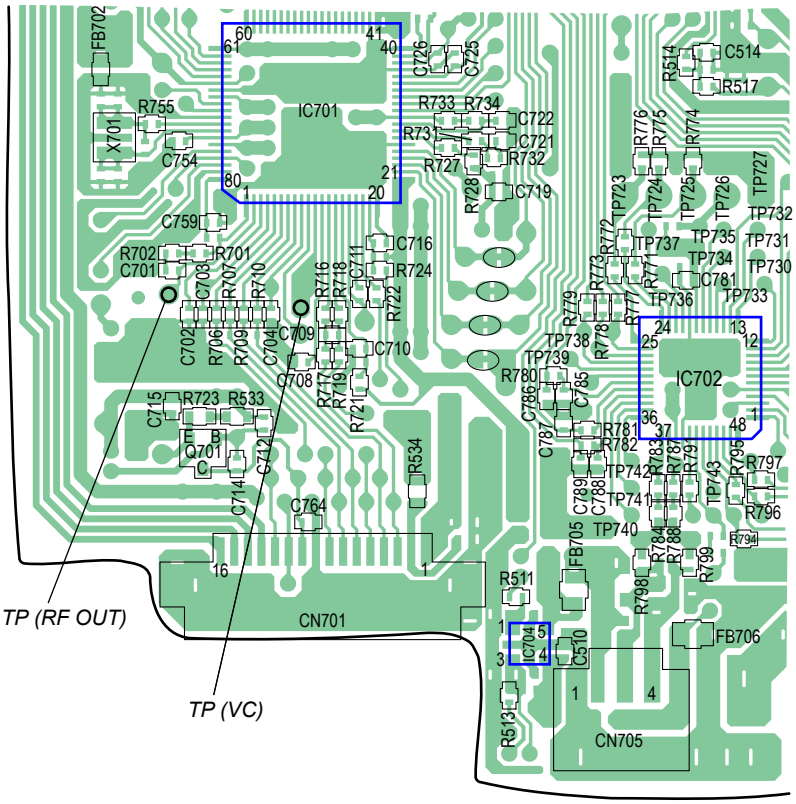

TAPE SECTION | 0 dB = 0.775V

1. Demagnetize the record/playback head with a head demagnetizer.
2. Do not use a magnetized screwdriver for the adjustments.

- **Test Tape**

Tape	Signal	Used for
P-4-A063	6.3 kHz, –10 dB	Azimuth Adjustment
WS-48A	3 kHz, 0 dB	Tape Speed Adjustment

Tape Speed Adjustment
Procedure:
Mode: playback
Adjust so that the value on the digital frequency counter is 3,000 Hz.

Specification Value:

Digital frequency counter
2,940 to 3,060 Hz

Adjust so that the frequency at the beginning and that at the end of tape winding are between 2,970 to 3,030 Hz.

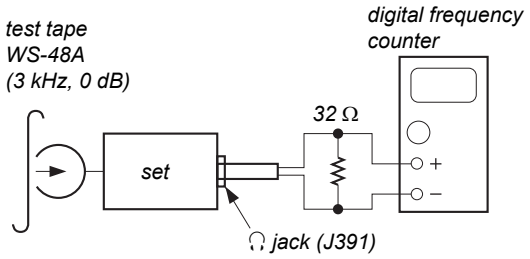

Adjustment Location:

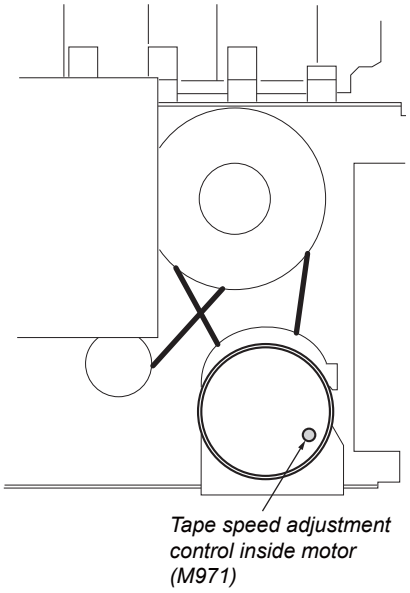

TUNER SECTION

0 dB = 1 μV

- **AM Section**
  Setting:
  RADIO BAND•AUTO PRESET button: AM

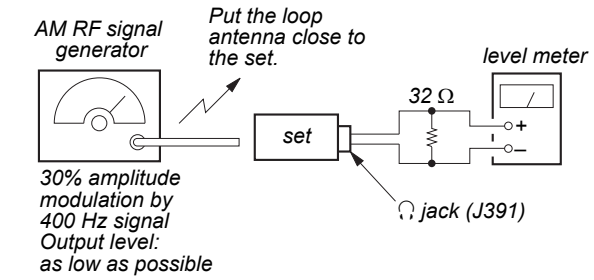

- **FM Section**
  Setting:
  RADIO BAND•AUTO PRESET button: FM

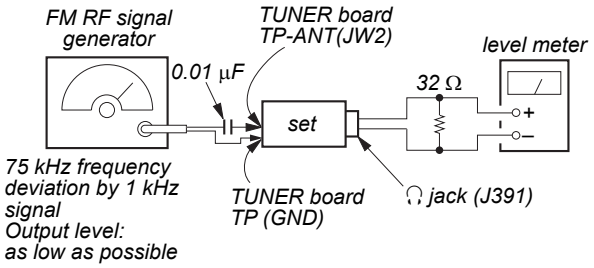

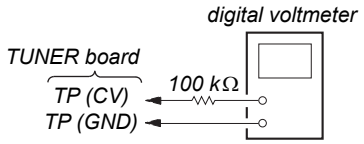

- Repeat the procedures in each adjustment several times, and the tracking adjustments should be finally done by the trimmer capacitors.
- Remove FM antenna in FM adjustment.

AM IF ADJUSTMENT
Adjust for a maximum reading on level meter.
T1
450 kHz

AM FREQUENCY COVERAGE ADJUSTMENT (EXCEPT MX)		
Frequency Display	531 kHz	1,611 kHz
Reading on Digital voltmeter	1.0 ± 0.05 V	4.8 ± 0.6 V
Adjustment Part	L4	<confirmation>

AM FREQUENCY COVERAGE ADJUSTMENT (MX)		
Frequency Display	530 kHz	1,710 kHz
Reading on Digital voltmeter	1.0 ± 0.05 V	5.2 ± 0.7 V
Adjustment Part	L4	<confirmation>

AM TRACKING ADJUSTMENT (EXCEPT MX)	
Adjust for a maximum reading on level meter.	
L3	CT3
621 kHz	1,404 kHz

AM TRACKING ADJUSTMENT (MX)	
Adjust for a maximum reading on level meter.	
L3	CT3
620 kHz	1,400 kHz

FM IF ADJUSTMENT
Adjust for a maximum reading on level meter.
T2
10.7 MHz

FM FREQUENCY COVERAGE ADJUSTMENT		
Frequency Display	87.5 MHz	108 MHz
Reading on Digital voltmeter	1.3 ± 0.3 V	3.0 ± 0.2 V
Adjustment Part	<confirmation>	L2

FM TRACKING ADJUSTMENT	
Adjust for a maximum reading on level meter.	
L1	CT1
87.5 MHz	108 MHz

- Abbreviation
  MX : Mexican model

Adjustment Location: See page 24.

Adjustment Location:

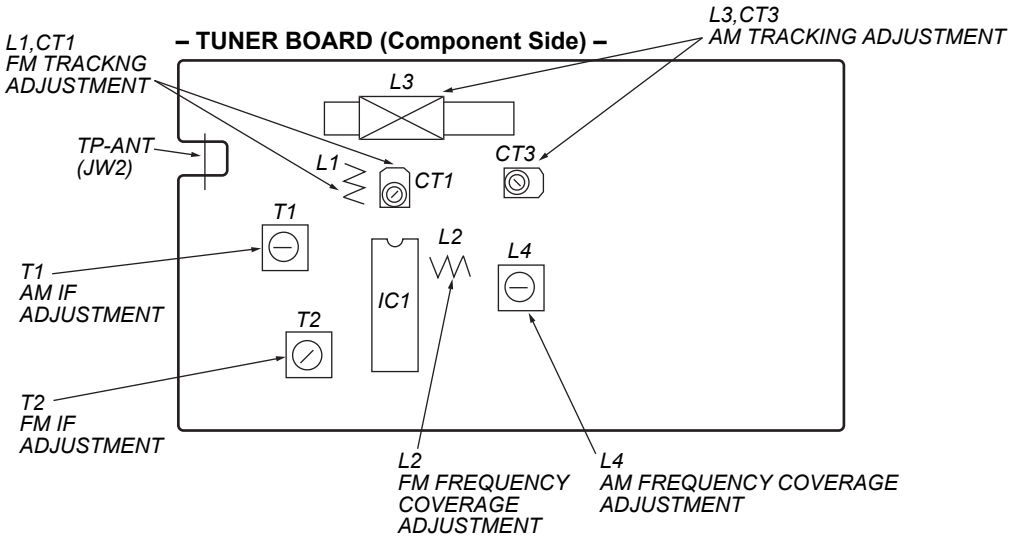

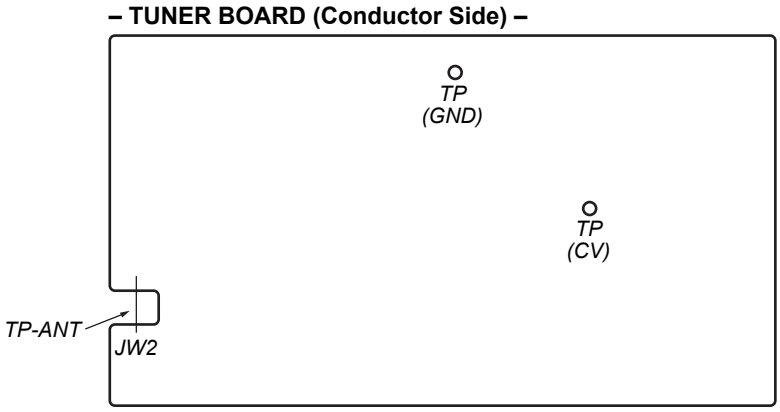

SECTION 7
DIAGRAMS

7-1. BLOCK DIAGRAM – CD Section –

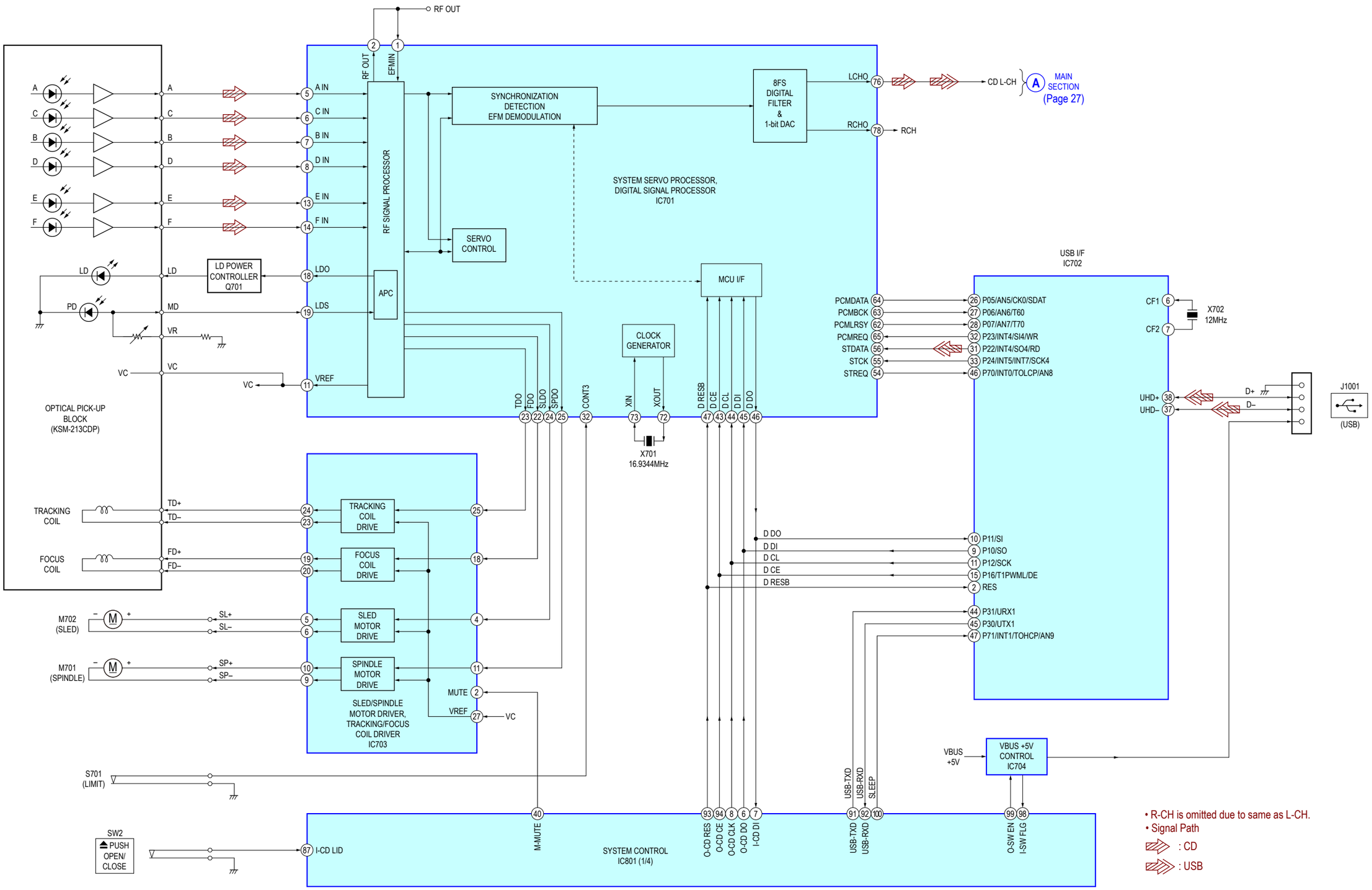

7-2. BLOCK DIAGRAM – TUNER Section –

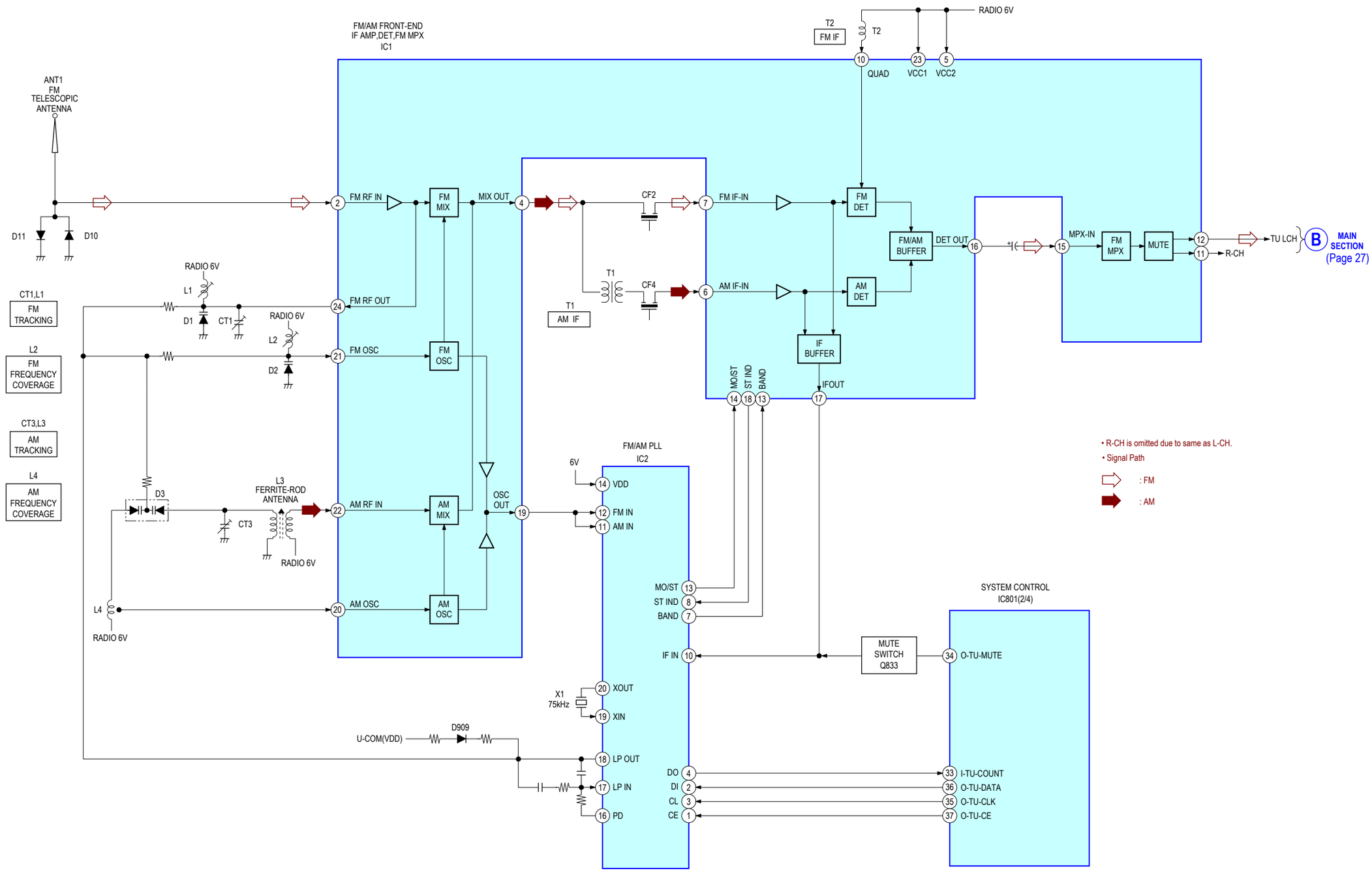

7-3. BLOCK DIAGRAM – MAIN Section –

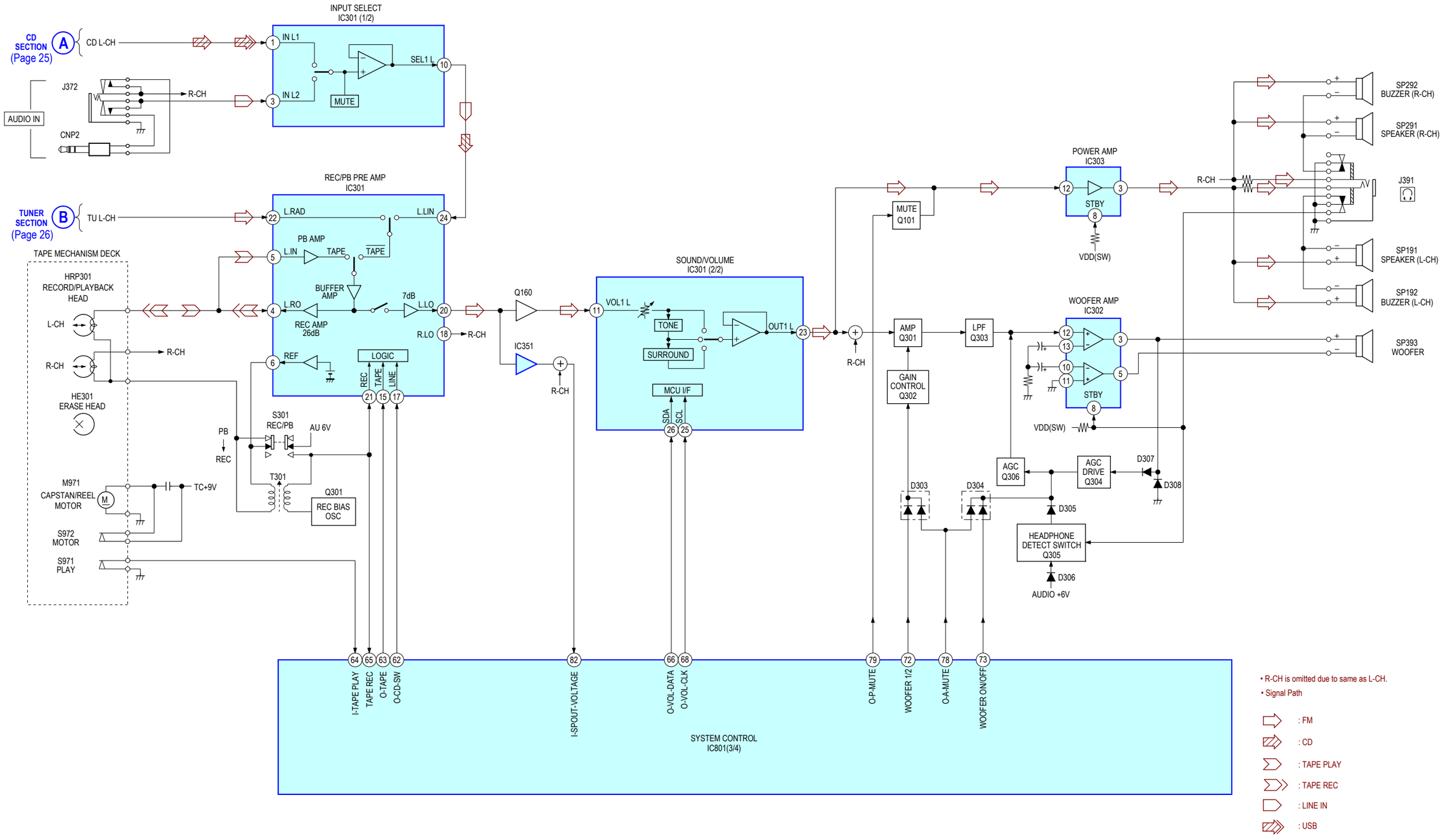

- R-CH is omitted due to same as L-CH.
- Signal Path

: FM
: CD
: TAPE PLAY
: TAPE REC
: LINE IN
: USB

7-4. BLOCK DIAGRAM – POWER Section –

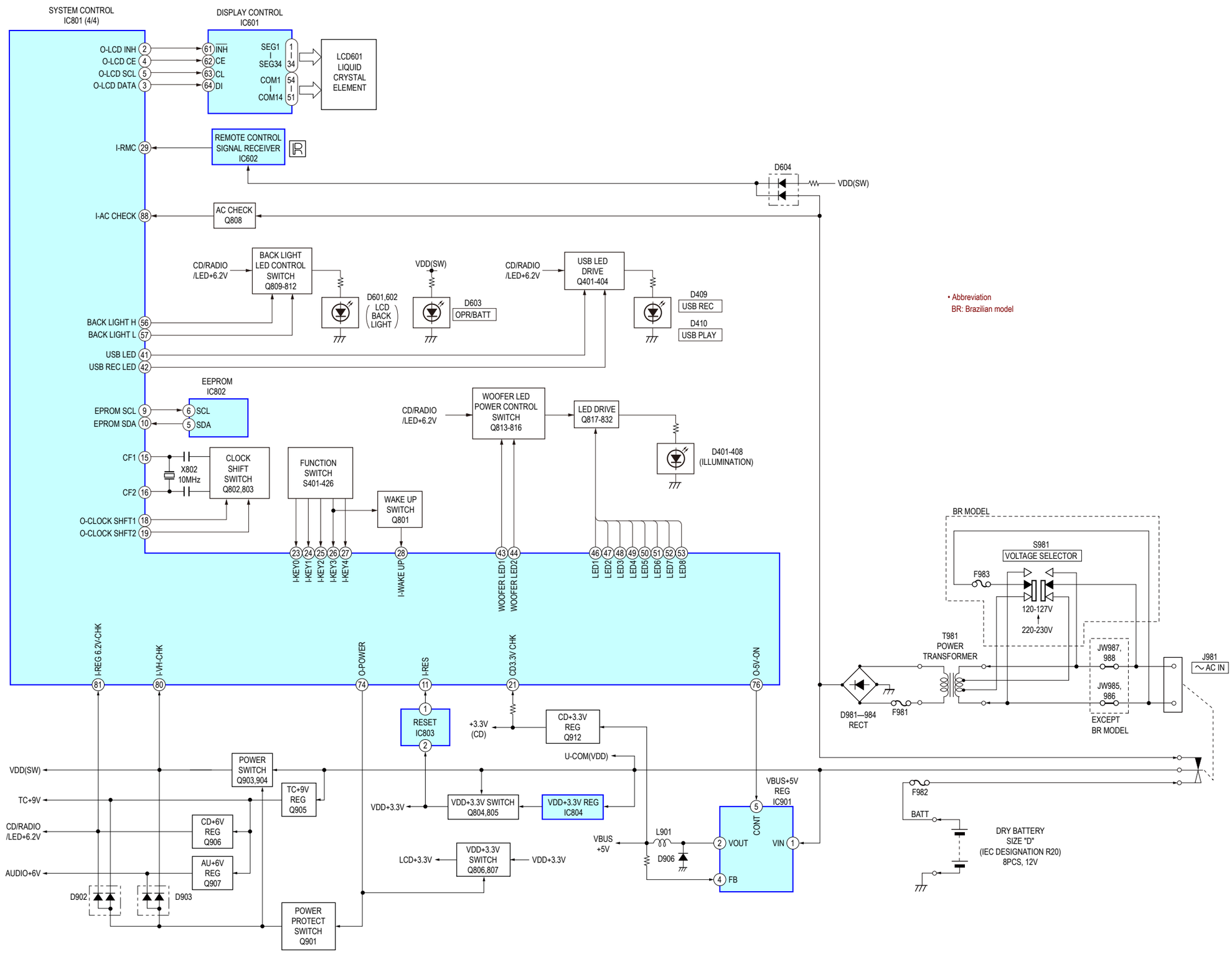

• Abbreviation
BR: Brazilian model

THIS NOTE IS COMMON FOR PRINTED WIRING BOARDS AND SCHEMATIC DIAGRAMS.
(In addition to this, the necessary note is printed in each block.)

For Printed Wiring Boards.

Note:

- ○——: Parts extracted from the component side.
- ○ : Through hole.
- △ : internal component.
- ▬ : Pattern from the side which enables seeing. (The other layers' patterns are not indicated.)

Caution:

Pattern face side: (SIDE B)	Parts on the pattern face side seen from the pattern face are indicated.
Parts face side: (SIDE A)	Parts on the parts face side seen from the parts face are indicated.

- Abbreviation
  BR : Brazilian model
  CET : East European & Russian model
  E41 : 230V AC area in E model
  E92 : 120V AC area in E model
  MX : Mexican model

For Schematic Diagrams.

Note:

- All capacitors are in μF unless otherwise noted. (p: pF) 50 WV or less are not indicated except for electrolytics and tantalums.
- All resistors are in Ω and 1/4 W or less unless otherwise specified.
- % : indicates tolerance.
- △ : internal component.
- ▭ : panel designation.

Note: The components identified by mark ⚠ or dotted line with mark ⚠ are critical for safety.
Replace only with part number specified.

- ▬ : B+ Line.
- ▭ : adjustment for repair.
- Voltages and waveforms are dc with respect to ground under no-signal conditions.
  – CD Board –
  no mark: CD PLAY
  [ ]: USB
  – TUNER Board –
  no mark: FM
  ( ): AM
  – TC Board –
  no mark: FM
  ( ): PB
  < >: REC
  [ ]: CD PLAY
  ‹‹ ››: USB
  – MAIN (1/3), (2/3), (3/3) and Other Boards –
  no mark: FM
  ( ): AM
  ＊ : Impossible to measure
- Voltages are taken with VOM (Input impedance 10 MΩ). Voltage variations may be noted due to normal production tolerances.
- Waveforms are taken with a oscilloscope. Voltage variations may be noted due to normal production tolerances.
- Circled numbers refer to waveforms.
- Signal path.
  ⇨ : FM
  ➡ : AM
  : CD PLAY
  : USB
  : TAPE PLAY
  : TAPE REC
  : LINE IN
- Abbreviation
  BR : Brazilian model
  CET : East European & Russian model
  E41 : 230V AC area in E model
  E92 : 120V AC area in E model
  MX : Mexican model

- **Circuit Boards Location**

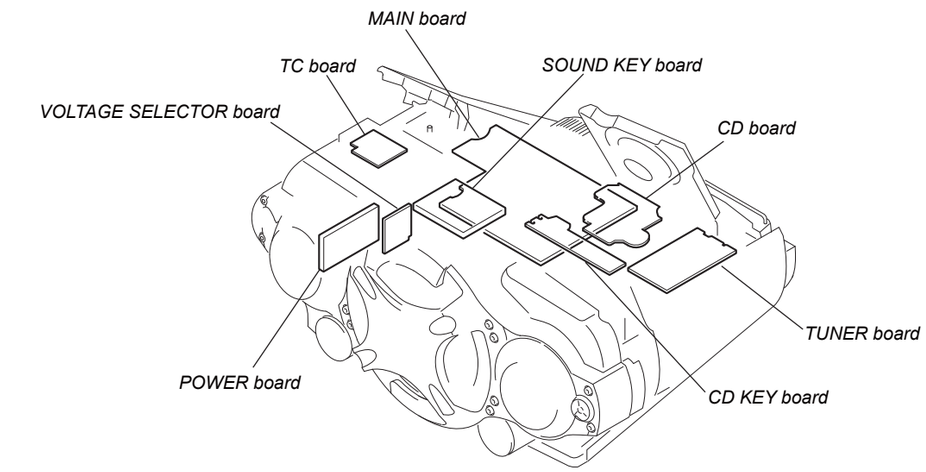

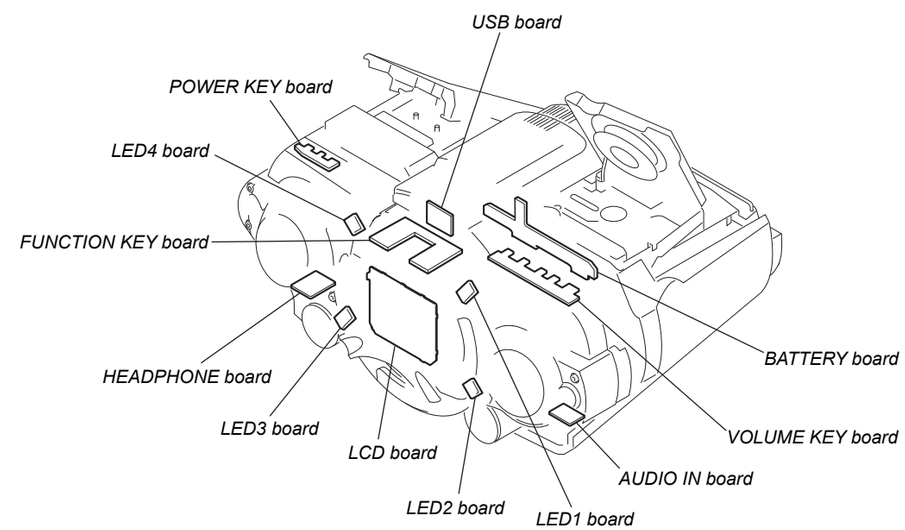

• **Waveforms**

– CD Board –
(MODE: CD PLAY)

① **IC701 ② (RF OUT)**

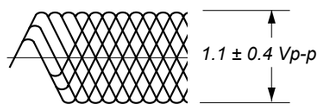

500 mV/DIV, 0.5 µsec/DIV

④ **IC701 ⑫ (XOUT)**

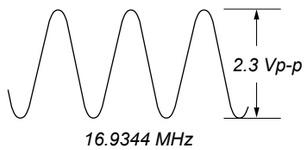

1 V/DIV, 0.05 µsec/DIV

② **IC701 ⑩ (RF MON (FE))**

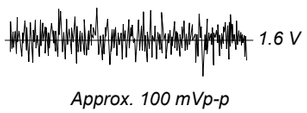

100 mV/DIV, 2 msec/DIV

⑤ **IC702 ⑥ (CF1) (USB PLAY)**

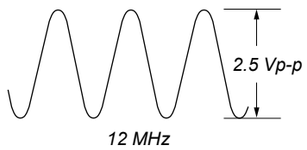

1 V/DIV, 50 µsec/DIV

③ **IC701 ⑯ (TE)**

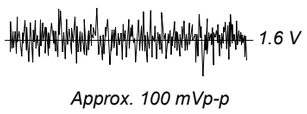

100 mV/DIV, 2 msec/DIV

– TC Board –

① **Q301 ⓒ REC**

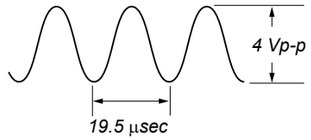

0.1 V/DIV, 5 µsec/DIV

② **T301, HRP301 (YEL)**

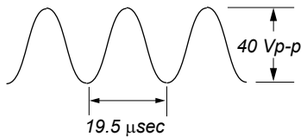

10 V/DIV, 5 µsec/DIV

– MAIN Board –

① **IC801 ⑮ (CF1)**

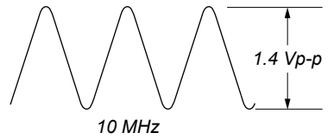

500 mV/DIV, 0.1 µsec/DIV

– TUNER Board –

① **IC2 ⑳ (XOUT)**

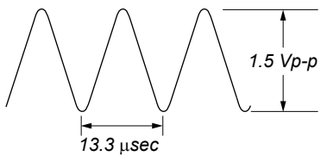

500 mV/DIV, 5 µsec/DIV

7-5. PRINTED WIRING BOARD – CD Section –

• See page 29 for Circuit Boards Location. • : Uses unleaded solder.

【 CD BOARD 】(SIDE A)

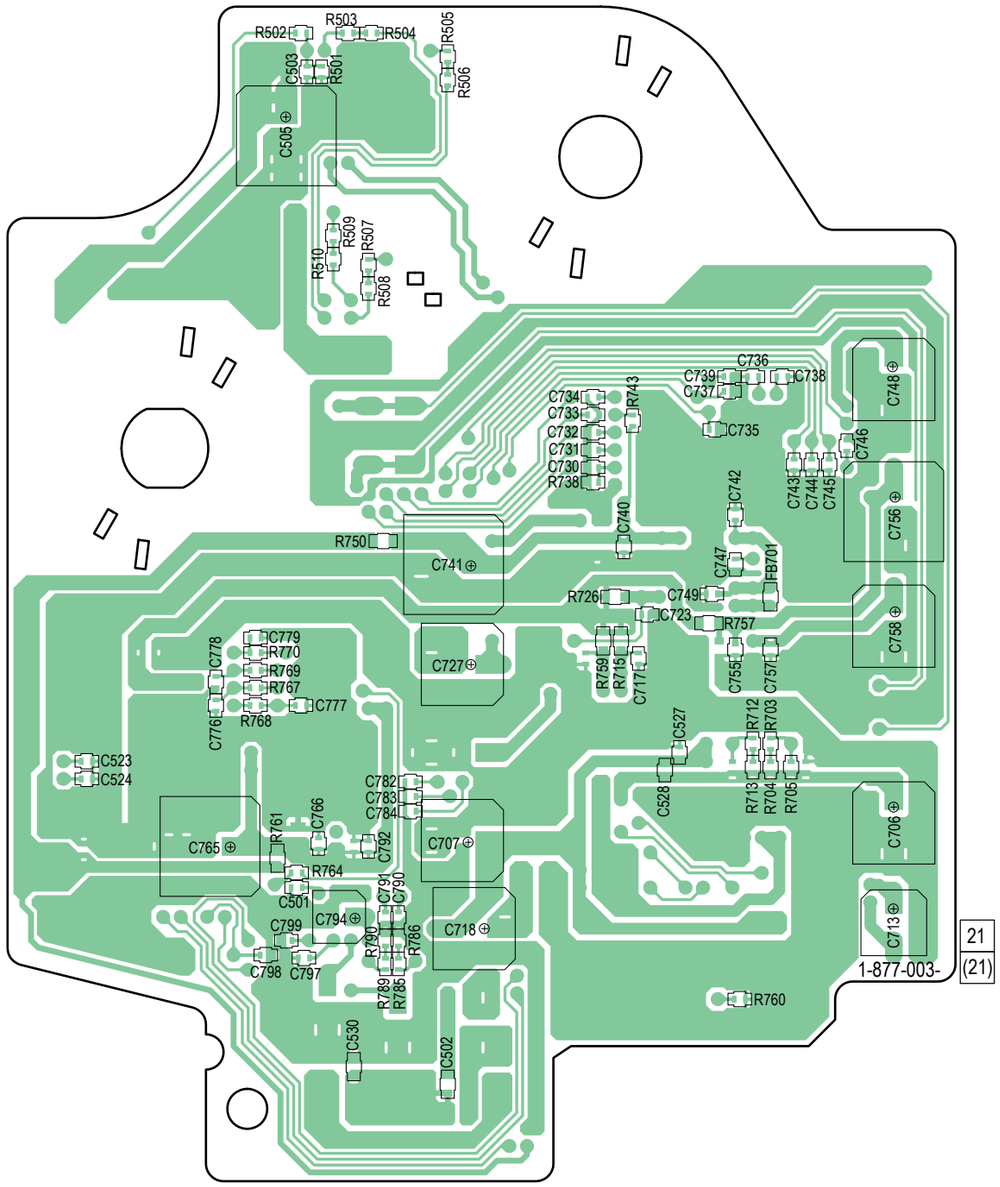

【 CD BOARD 】(SIDE B)

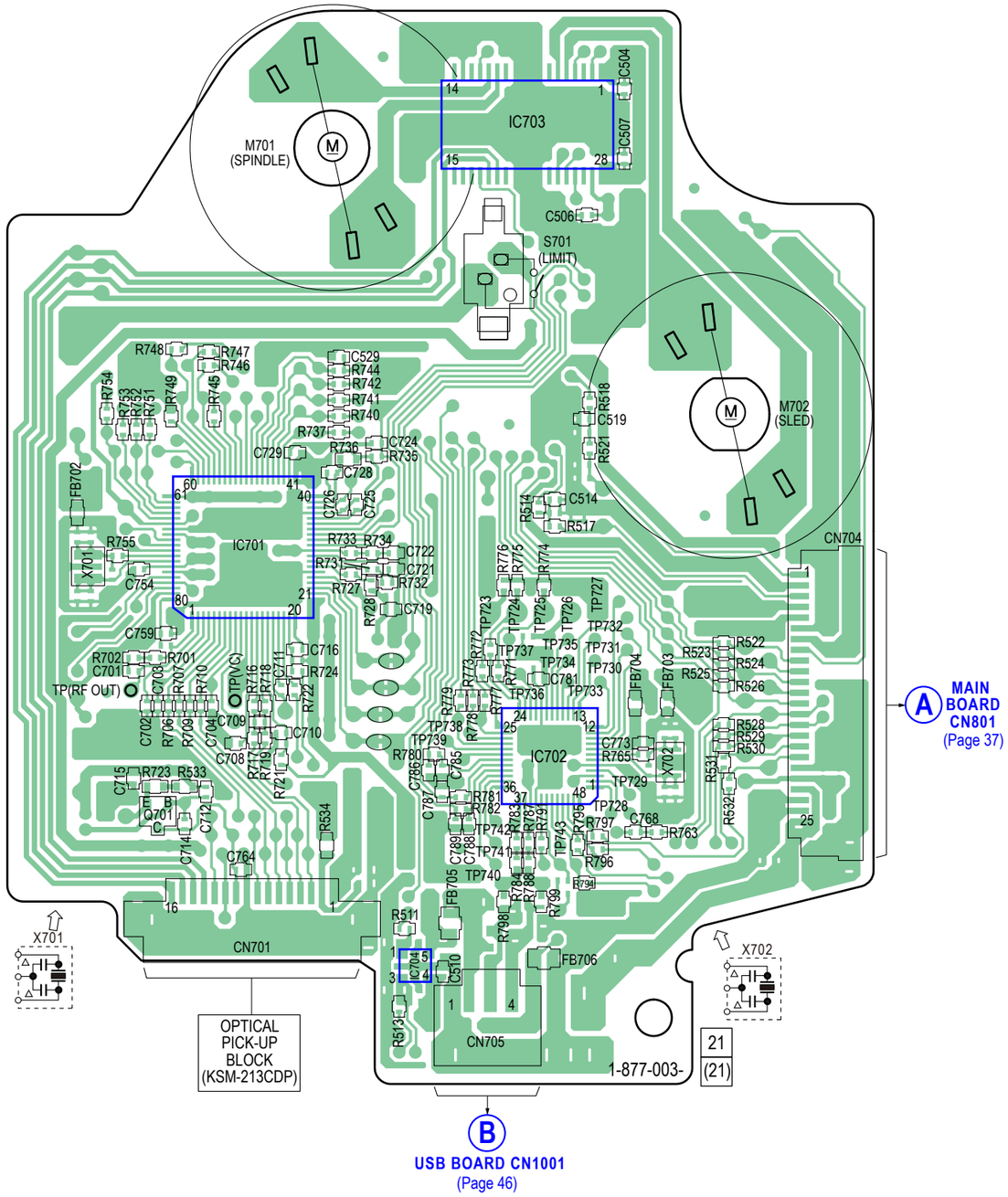

• **Semiconductor Location**

Ref. No.	Location
IC701	E-10
IC702	G-12
IC703	B-11
IC704	H-11
Q701	G-9

7-6. SCHEMATIC DIAGRAM – CD Section –

• See page 30 for waveforms. • See page 48 for IC Block Diagrams. • See page 53 for IC Pin Function Description of IC702.

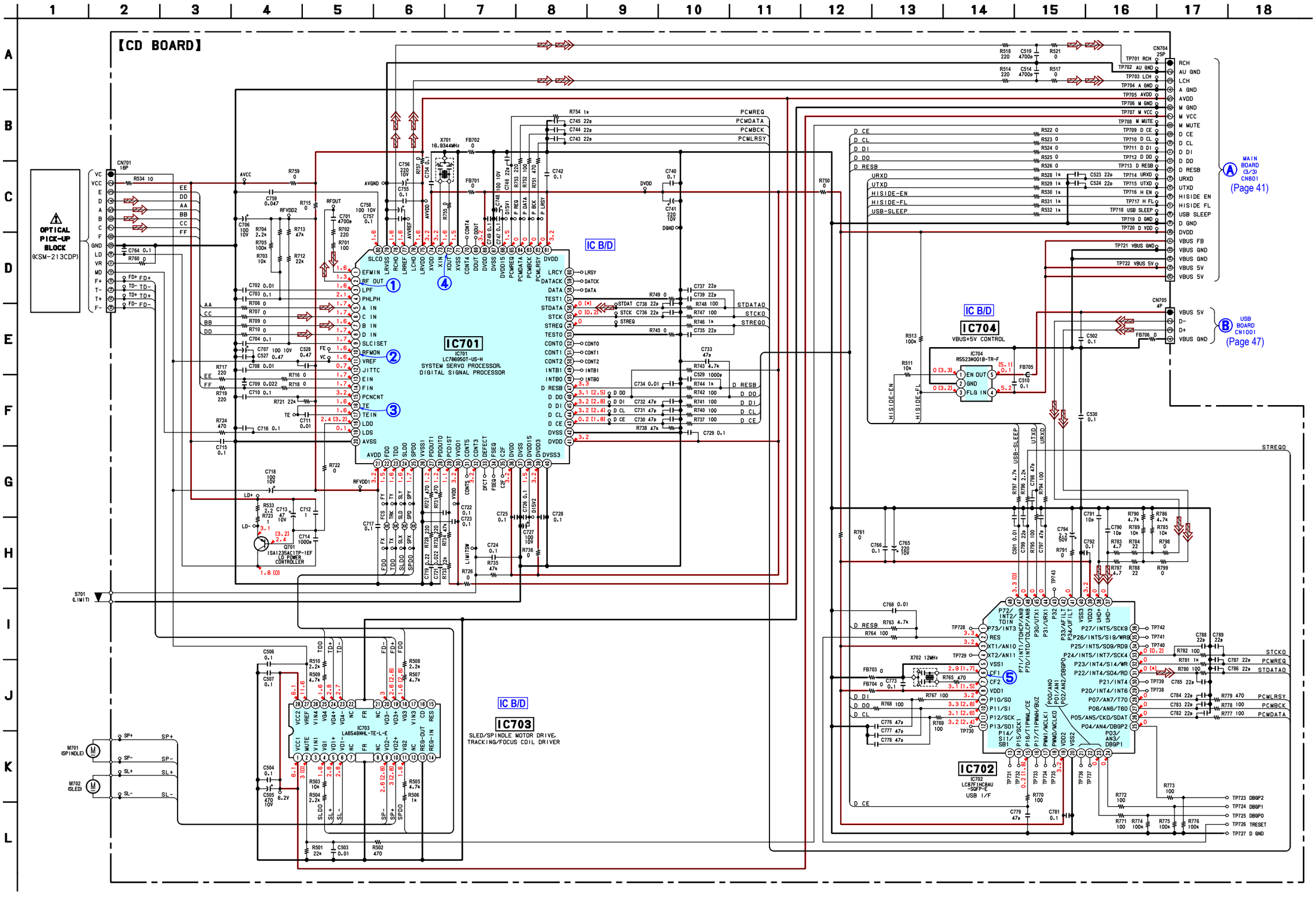

7-7. PRINTED WIRING BOARD – TUNER Section –

• See page 29 for Circuit Boards Location. • : Uses unleaded solder.

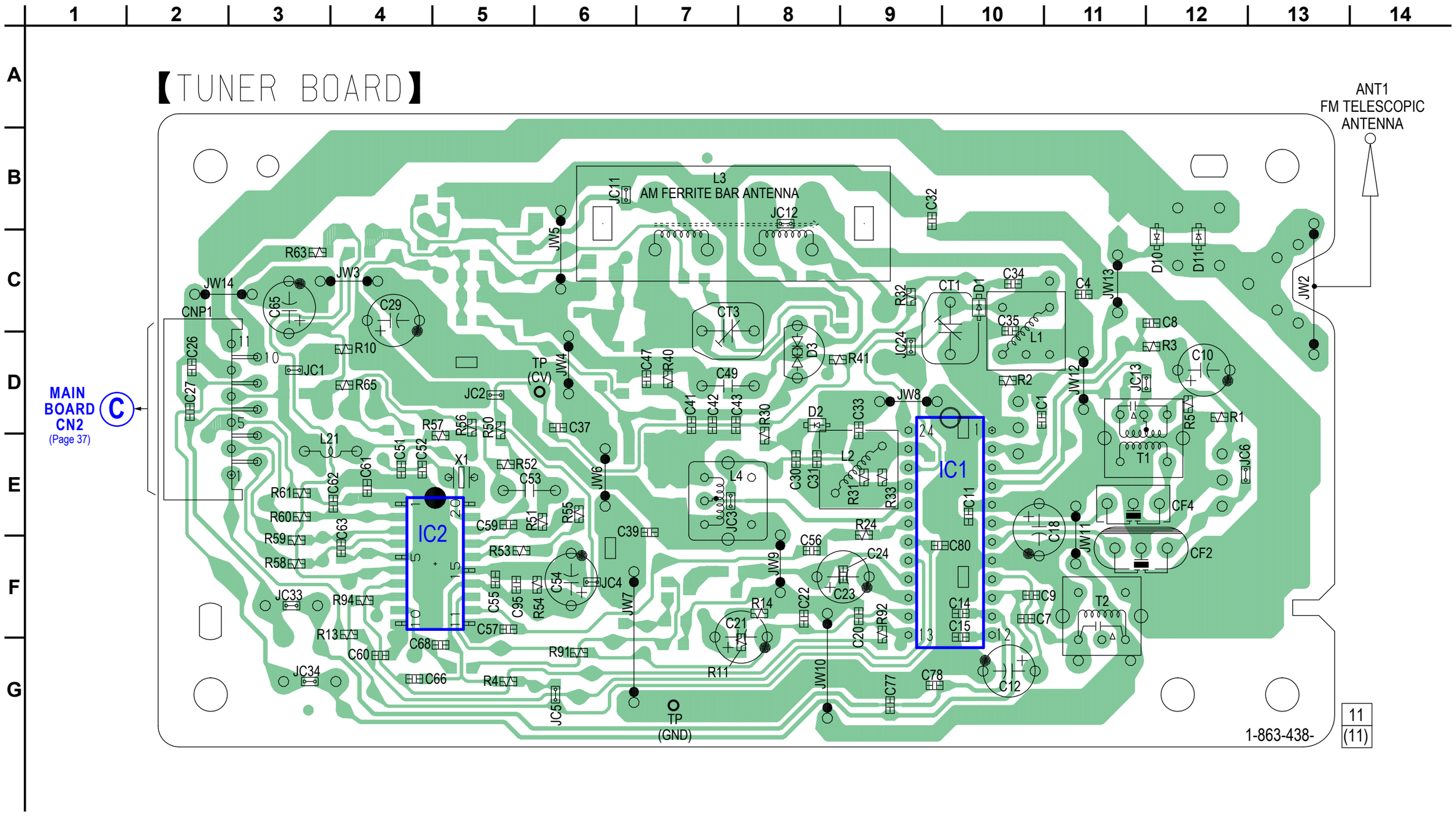

• **Semiconductor Location**

Ref. No.	Location
D1	C-10
D2	D-8
D3	D-8
D10	C-12
D11	C-12
IC1	E-10
IC2	E-4

7-8. SCHEMATIC DIAGRAM – TUNER Section –

• See page 30 for waveform. • See page 49 for IC Block Diagrams.

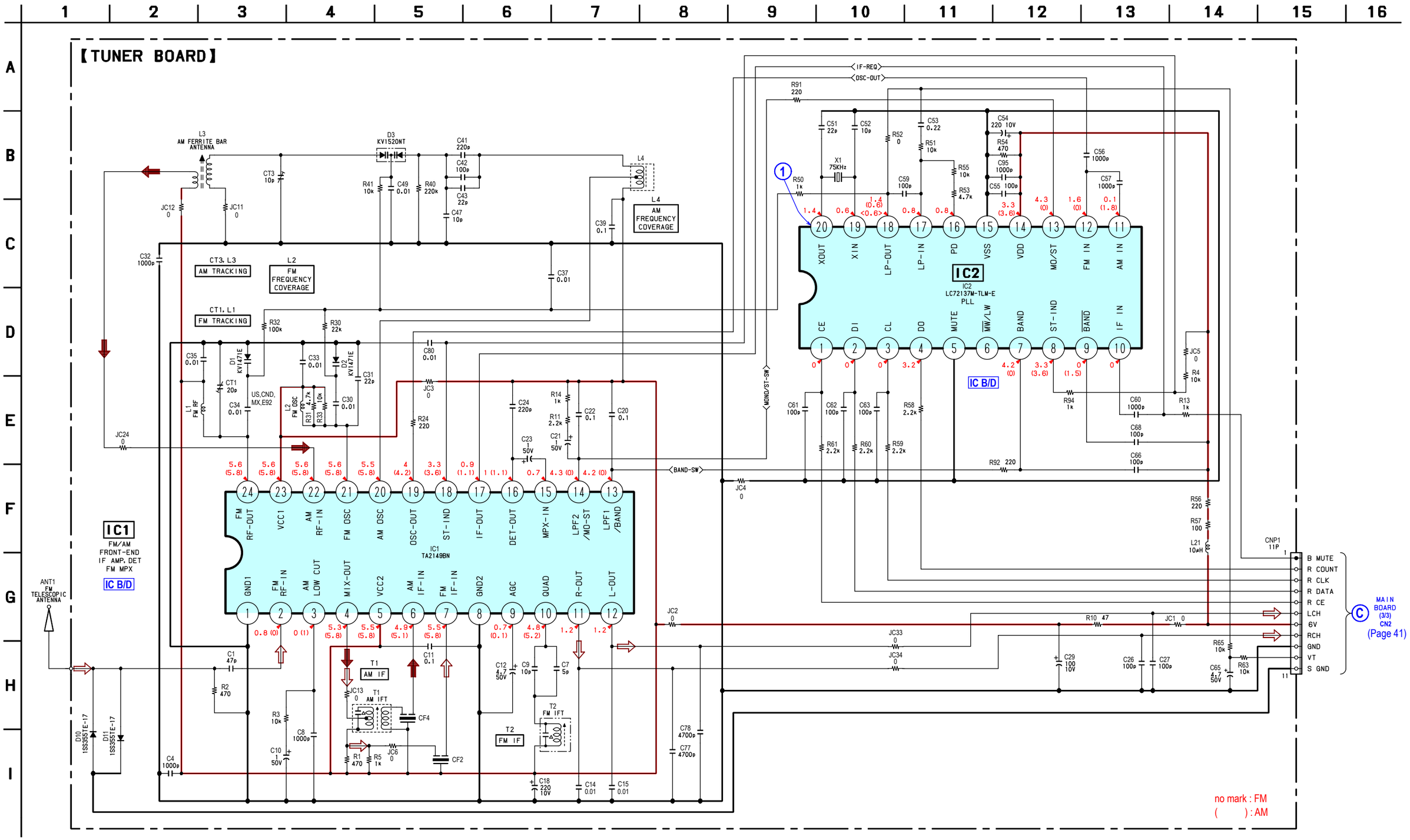

7-9. PRINTED WIRING BOARD – TC Section –

• See page 29 for Circuit Boards Location. • : Uses unleaded solder.

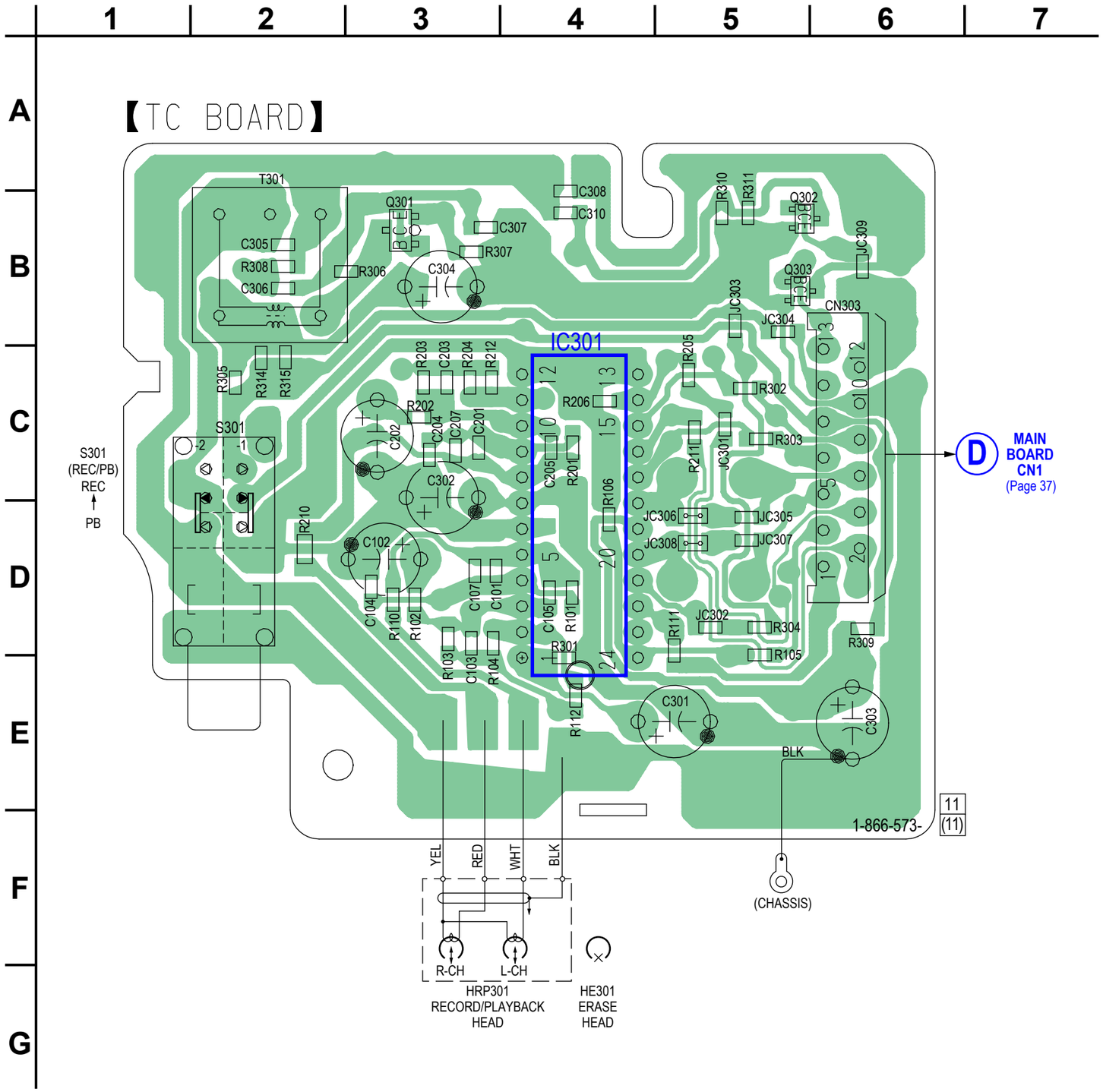

7-10. SCHEMATIC DIAGRAM – TC Section –

• See page 30 for waveforms. • See page 50 for IC Block Diagram.

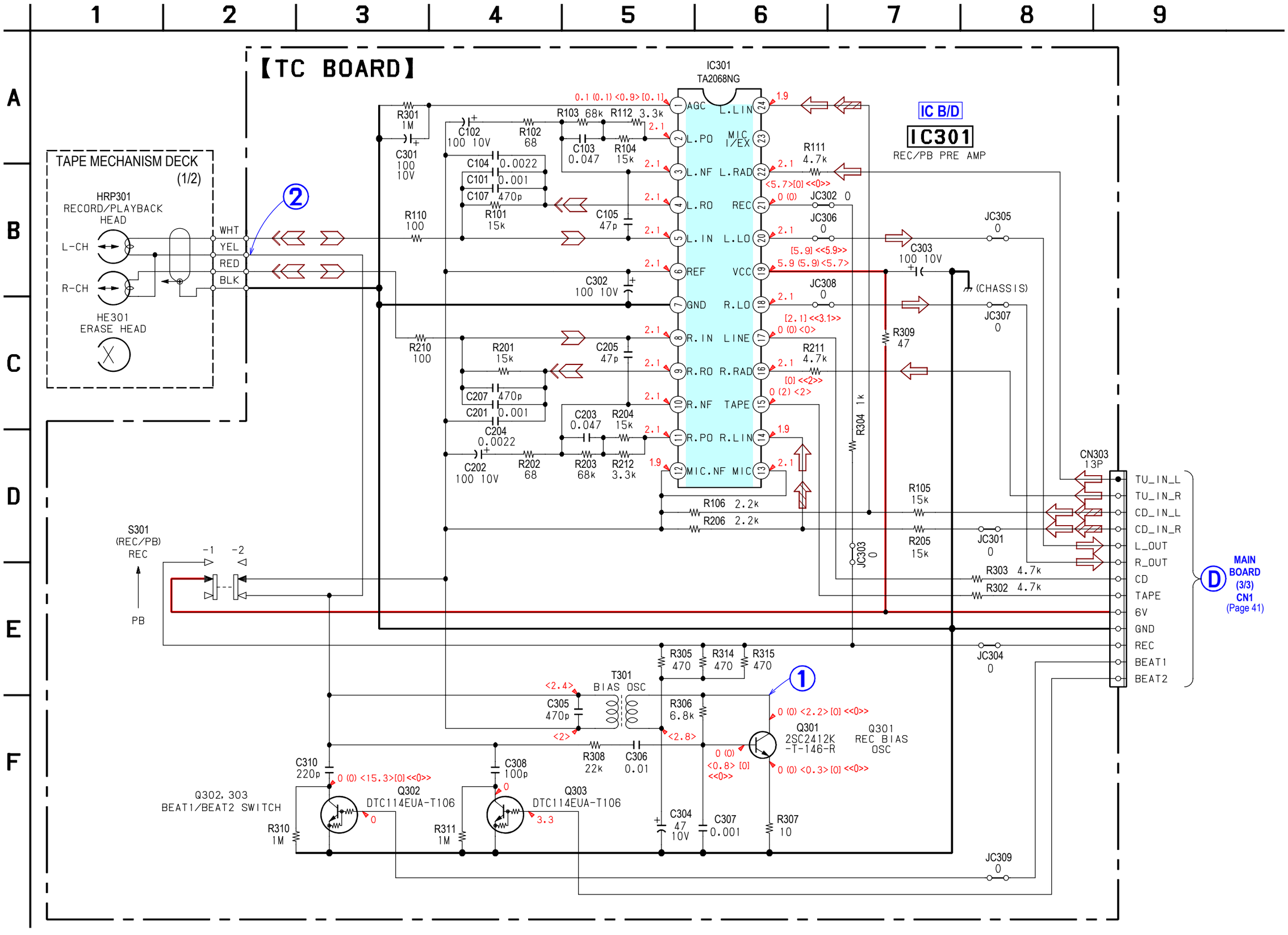

7-11. PRINTED WIRING BOARD – MAIN Section –

• See page 29 for Circuit Boards Location. • : Uses unleaded solder.

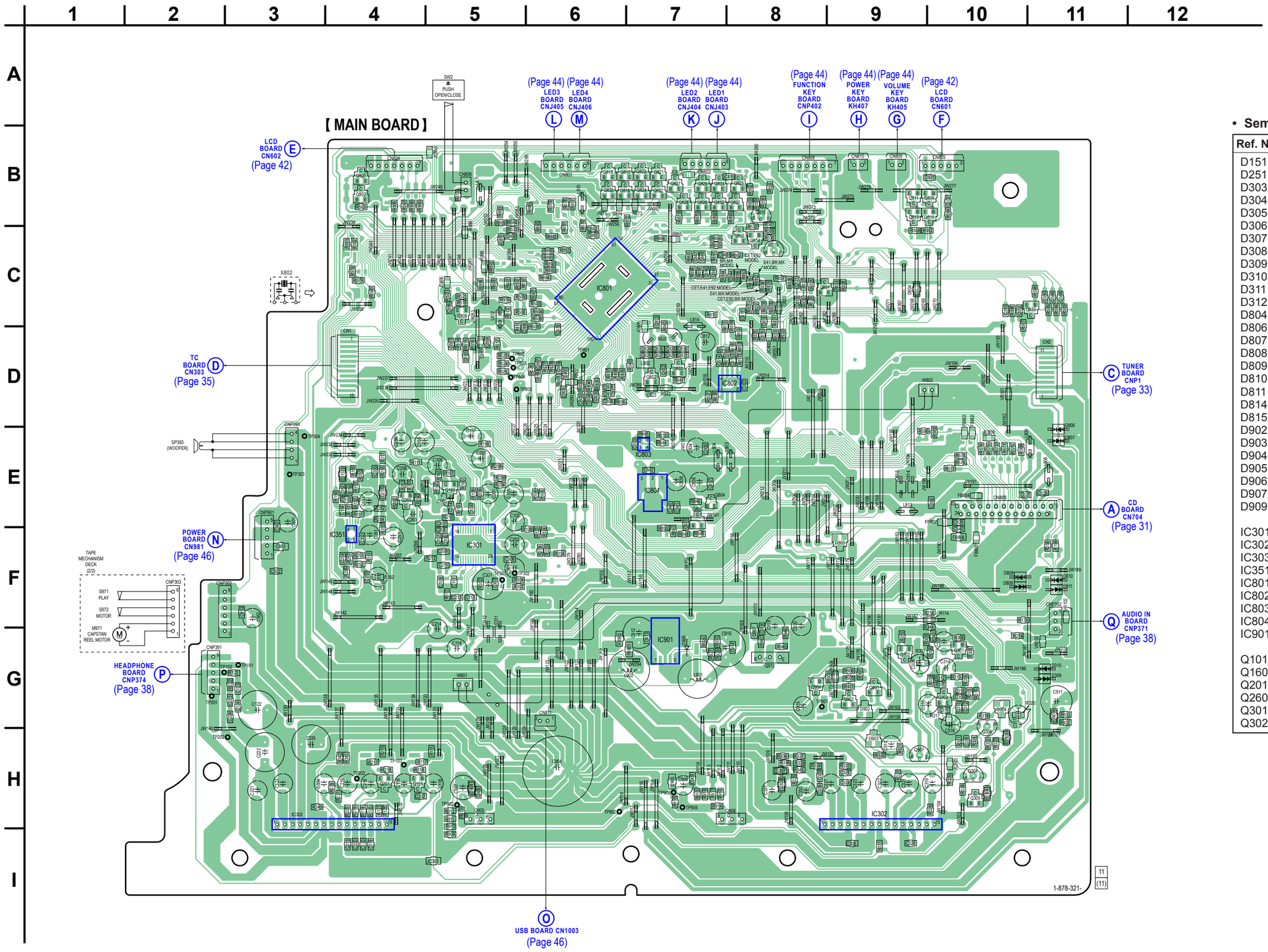

• **Semiconductor Location**

Ref. No.	Location	Ref. No.	Location
D151	E-4	Q303	G-10
D251	E-4	Q304	H-10
D303	F-9	Q305	H-10
D304	G-10	Q306	G-10
D305	H-10	Q801	C-8
D306	H-10	Q802	D-7
D307	H-8	Q803	D-7
D308	H-8	Q804	E-7
D309	G-11	Q805	E-7
D310	G-11	Q806	B-4
D311	F-5	Q807	B-4
D312	F-5	Q808	C-5
D804	C-9	Q809	B-10
D806	D-11	Q810	B-10
D807	E-11	Q811	B-9
D808	F-10	Q812	B-9
D809	F-10	Q813	C-8
D810	F-11	Q814	C-8
D811	F-11	Q815	B-8
D814	E-9	Q816	C-8
D815	E-9	Q817	B-6
D902	G-9	Q818	B-6
D903	H-9	Q819	B-6
D904	H-5	Q820	B-6
D905	H-7	Q821	B-7
D906	G-7	Q822	B-7
D907	F-8	Q823	B-7
D909	G-11	Q824	B-7
		Q825	B-7
IC301	F-5	Q826	B-7
IC302	H-9	Q827	B-7
IC303	H-3	Q828	B-7
IC351	F-4	Q829	B-8
IC801	C-6	Q830	B-8
IC802	D-7	Q831	B-7
IC803	E-7	Q832	B-7
IC804	E-7	Q833	C-11
IC901	G-7	Q901	G-9
		Q903	G-9
Q101	H-4	Q904	G-8
Q160	E-5	Q905	H-5
Q201	H-4	Q906	H-8
Q260	E-4	Q907	H-9
Q301	G-10	Q912	G-8
Q302	G-9		

7-12. PRINTED WIRING BOARDS – JACK Section –

• See page 29 for Circuit Boards Location. • : Uses unleaded solder.

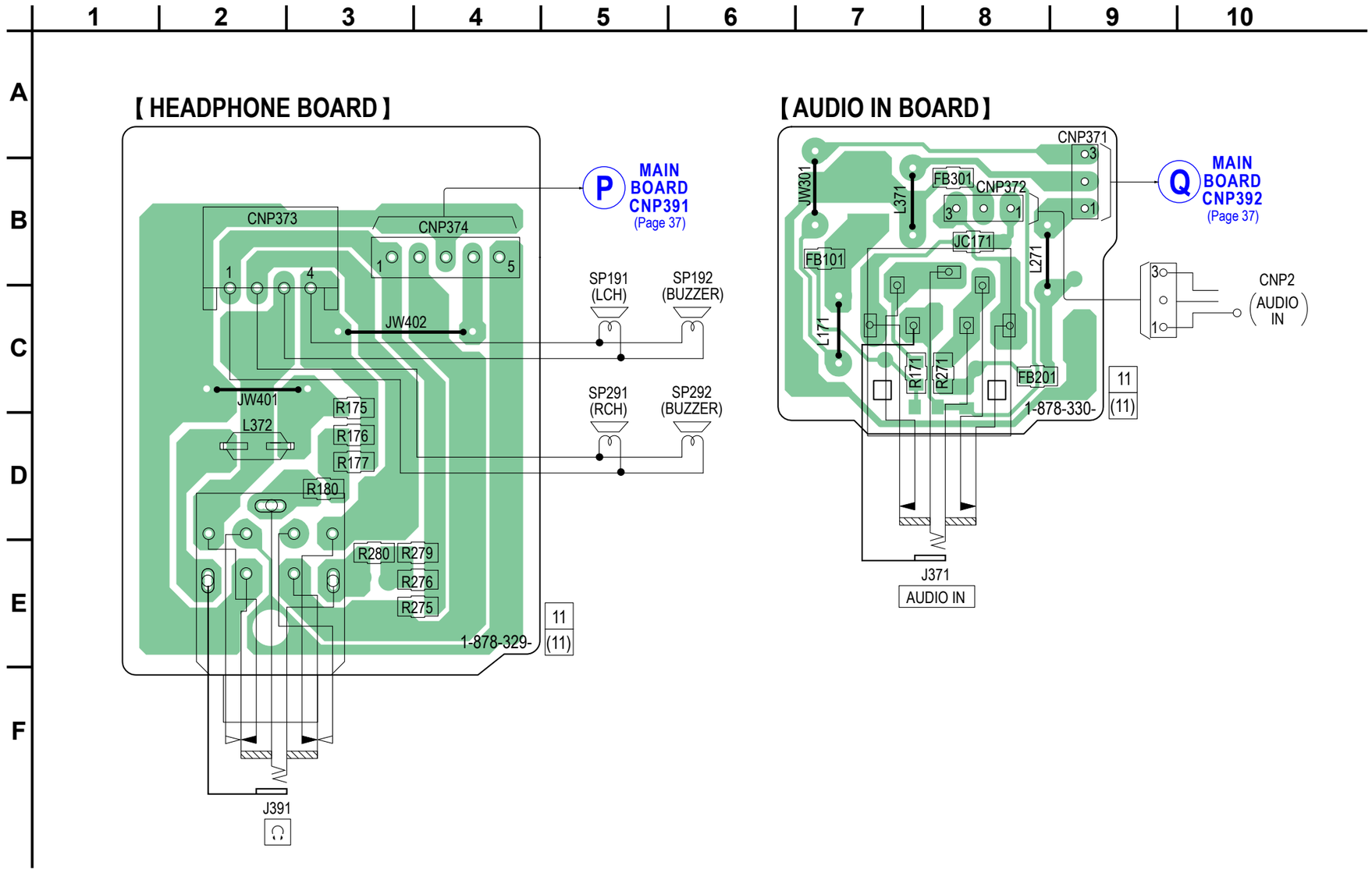

7-13. SCHEMATIC DIAGRAM – MAIN Section (1/3) –

• See page 30 for waveform. • See page 50 for IC Block Diagram. • See page 54 for IC Pin Function Description of IC801.

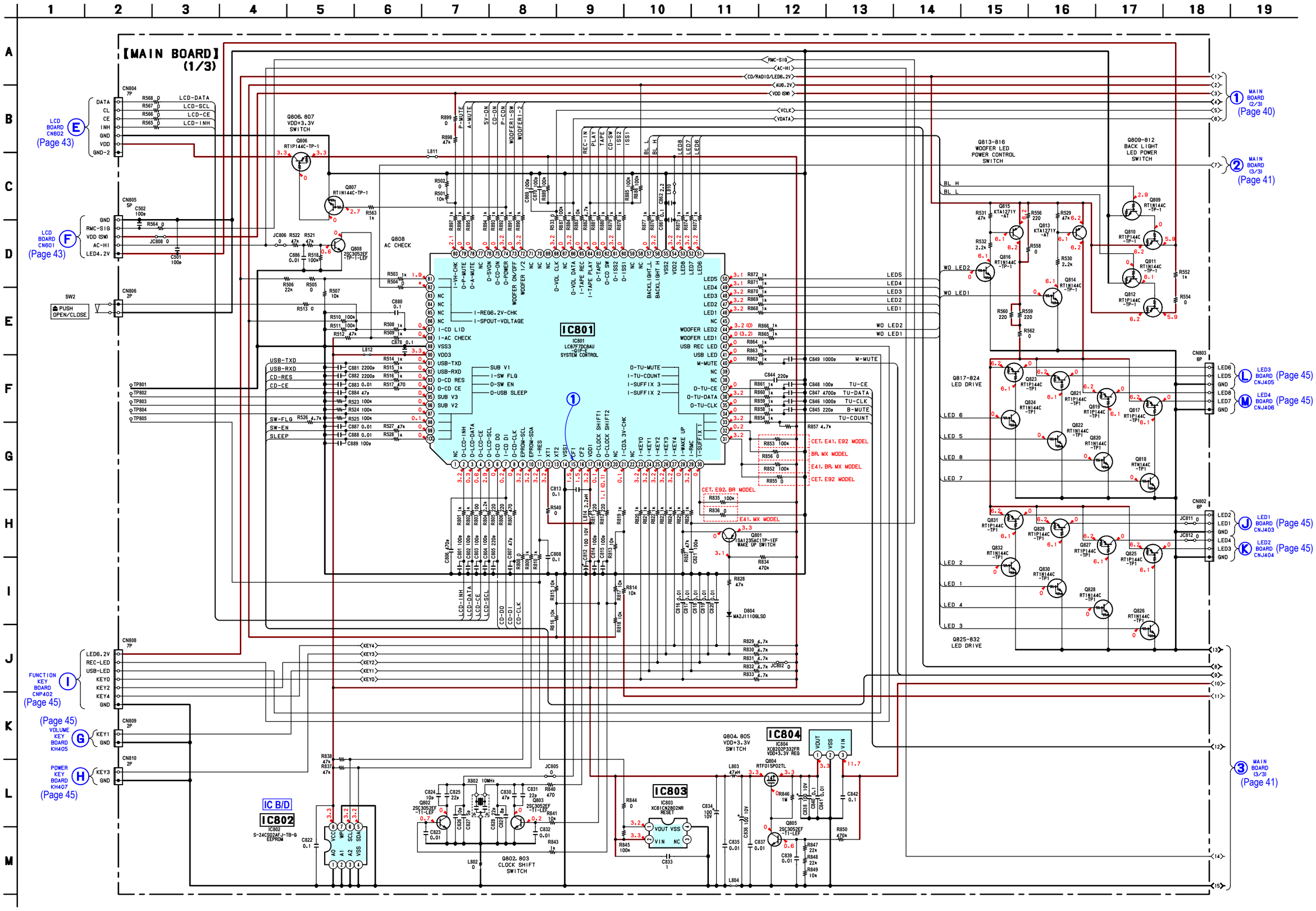

7-14. SCHEMATIC DIAGRAM – MAIN Section (2/3) –

• See page 51 for IC Block Diagram.

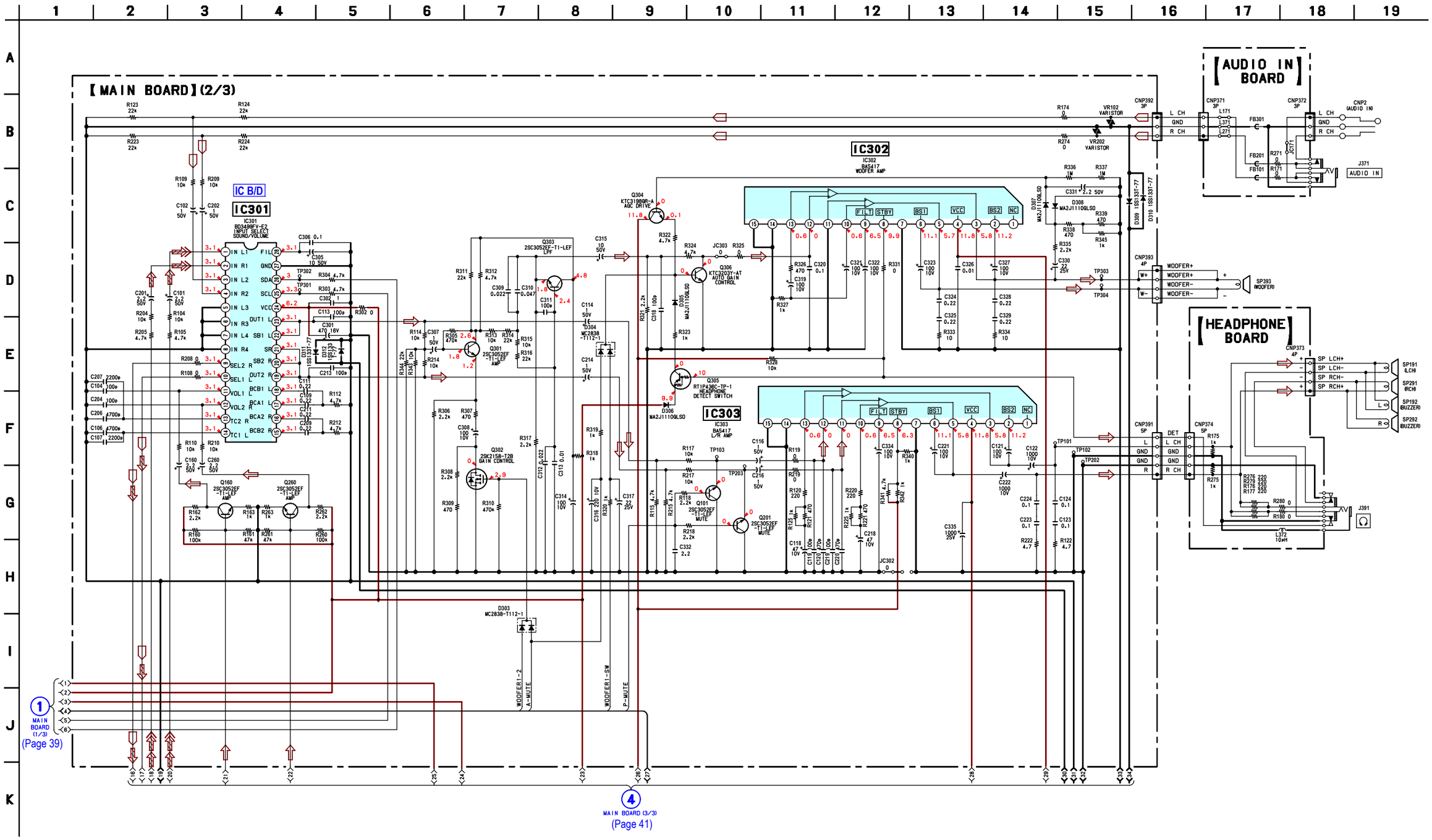

7-15. SCHEMATIC DIAGRAM – MAIN Section (3/3) –

• See page 51 for IC Block Diagrams.

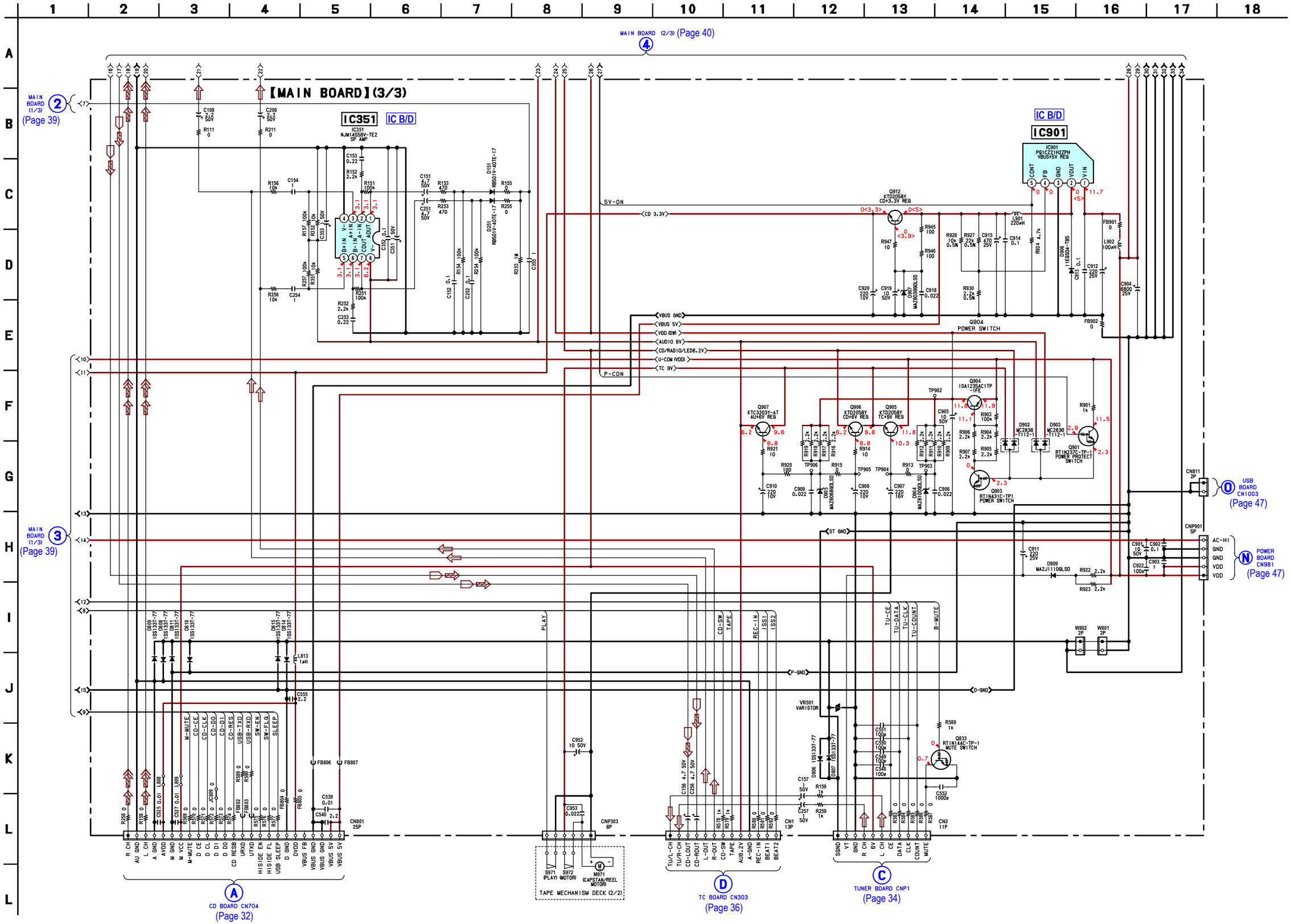

7-16. PRINTED WIRING BOARD – LCD Section –

• See page 29 for Circuit Boards Location. • : Uses unleaded solder.

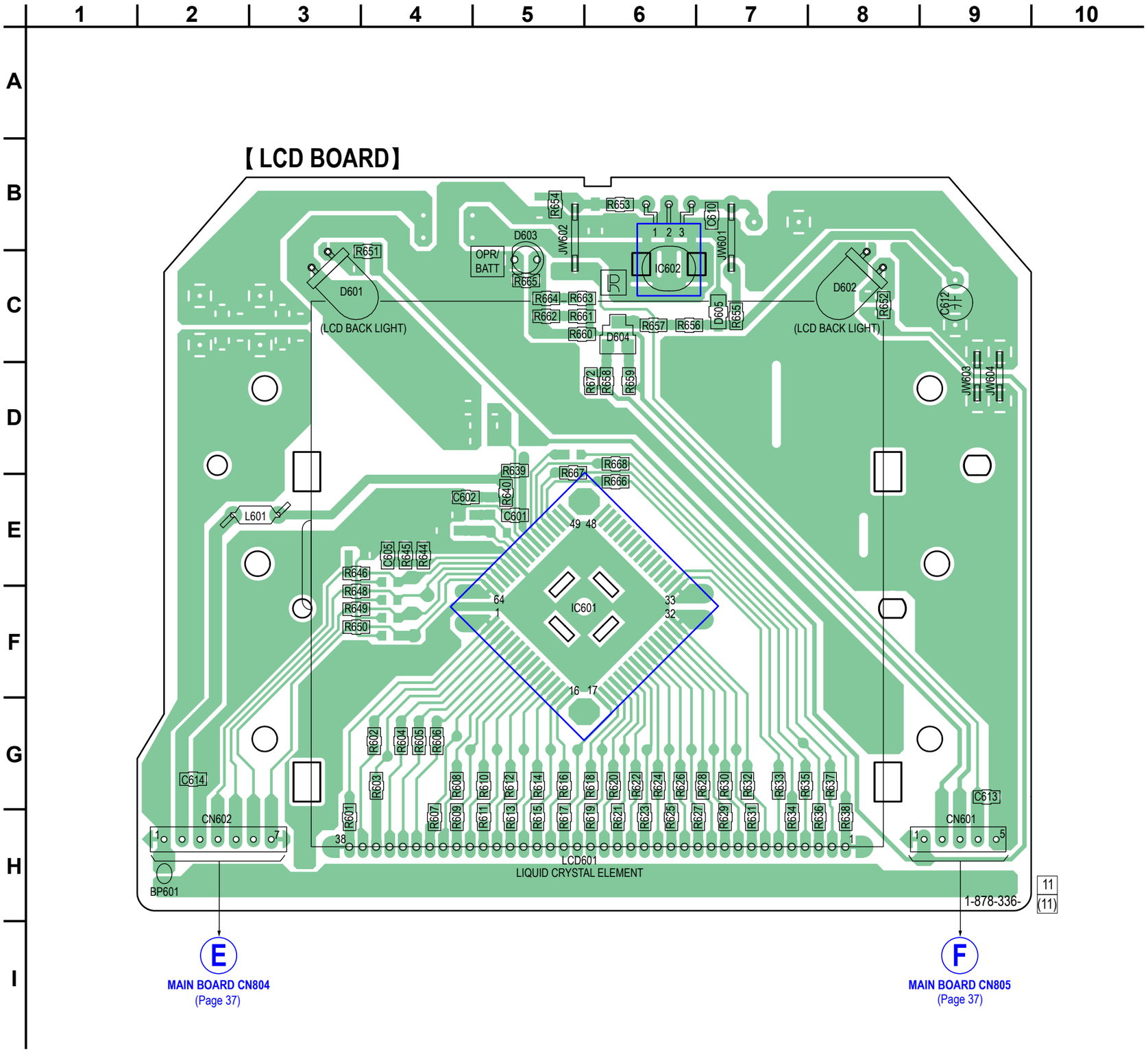

• Semiconductor Location

Ref. No.	Location
D601	C-3
D602	C-8
D603	B-5
D604	C-6
D605	C-7
IC601	F-5
IC602	C-6

7-17. SCHEMATIC DIAGRAM – LCD Section –

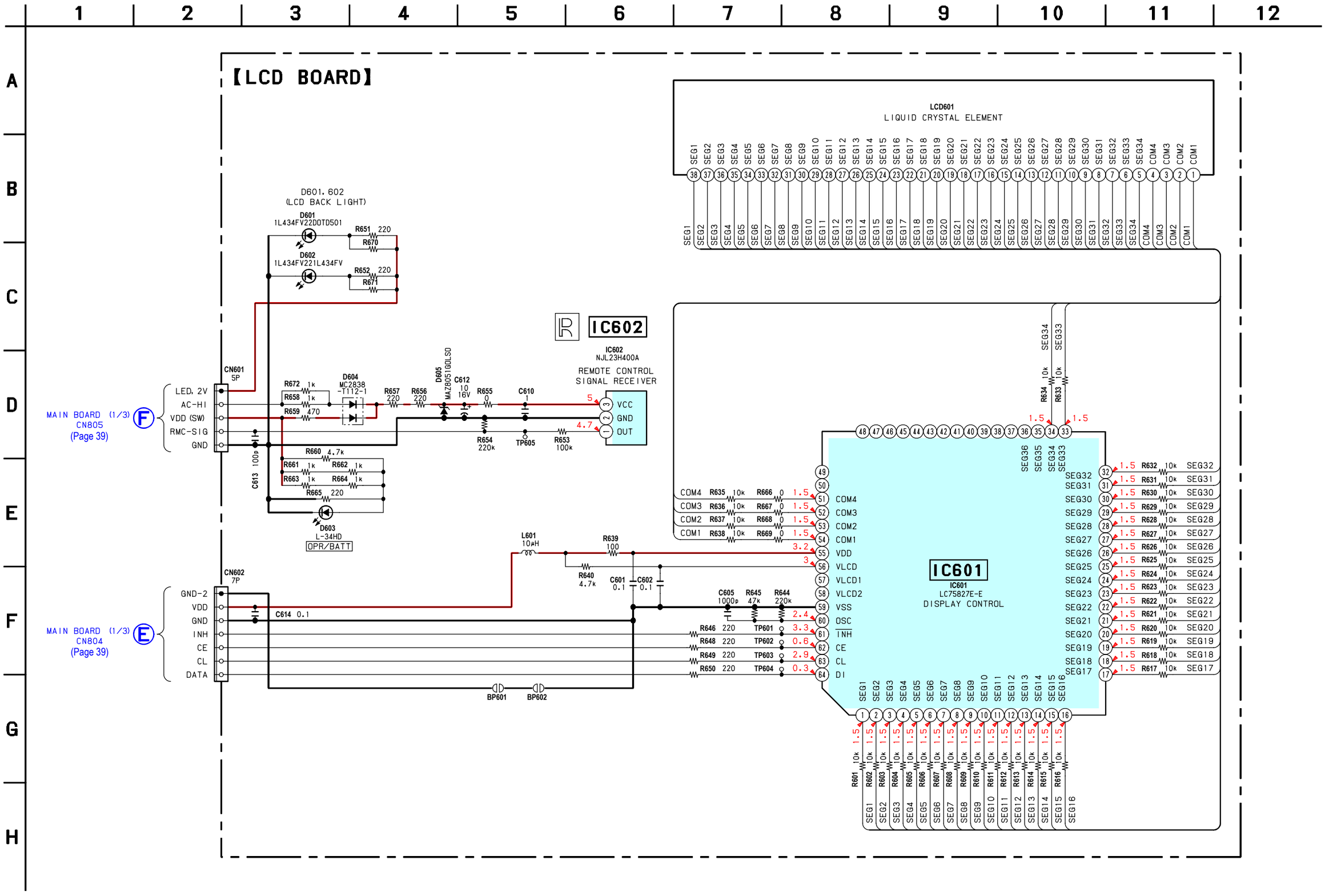

7-18. PRINTED WIRING BOARDS – KEY Section –

• See page 29 for Circuit Boards Location. • : Uses unleaded solder.

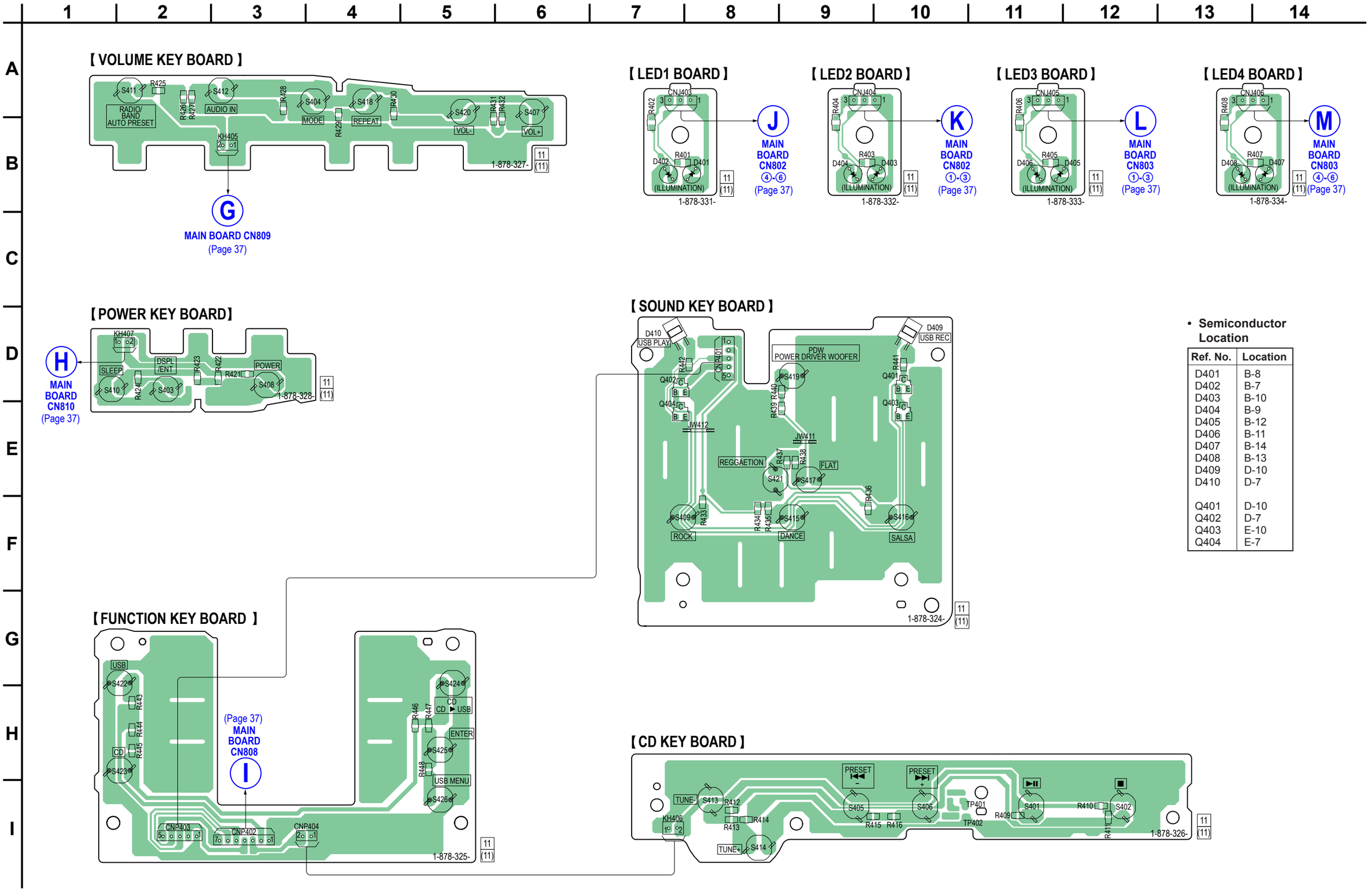

• Semiconductor Location

Ref. No.	Location
D401	B-8
D402	B-7
D403	B-10
D404	B-9
D405	B-12
D406	B-11
D407	B-14
D408	B-13
D409	D-10
D410	D-7
Q401	D-10
Q402	D-7
Q403	E-10
Q404	E-7

7-19. SCHEMATIC DIAGRAM – KEY Section –

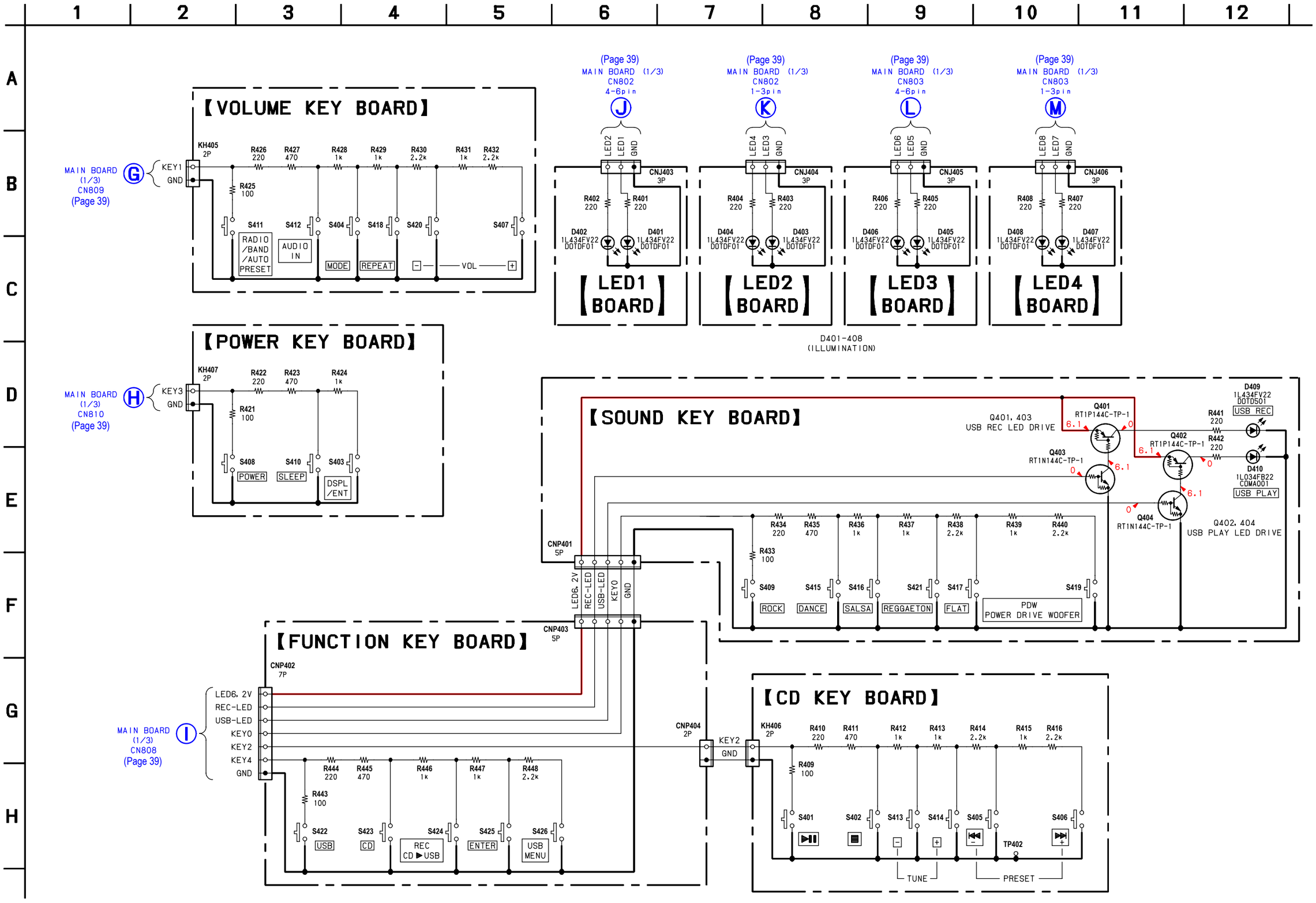

7-20. PRINTED WIRING BOARDS – POWER Section –

• See page 29 for Circuit Boards Location. • : Uses unleaded solder.

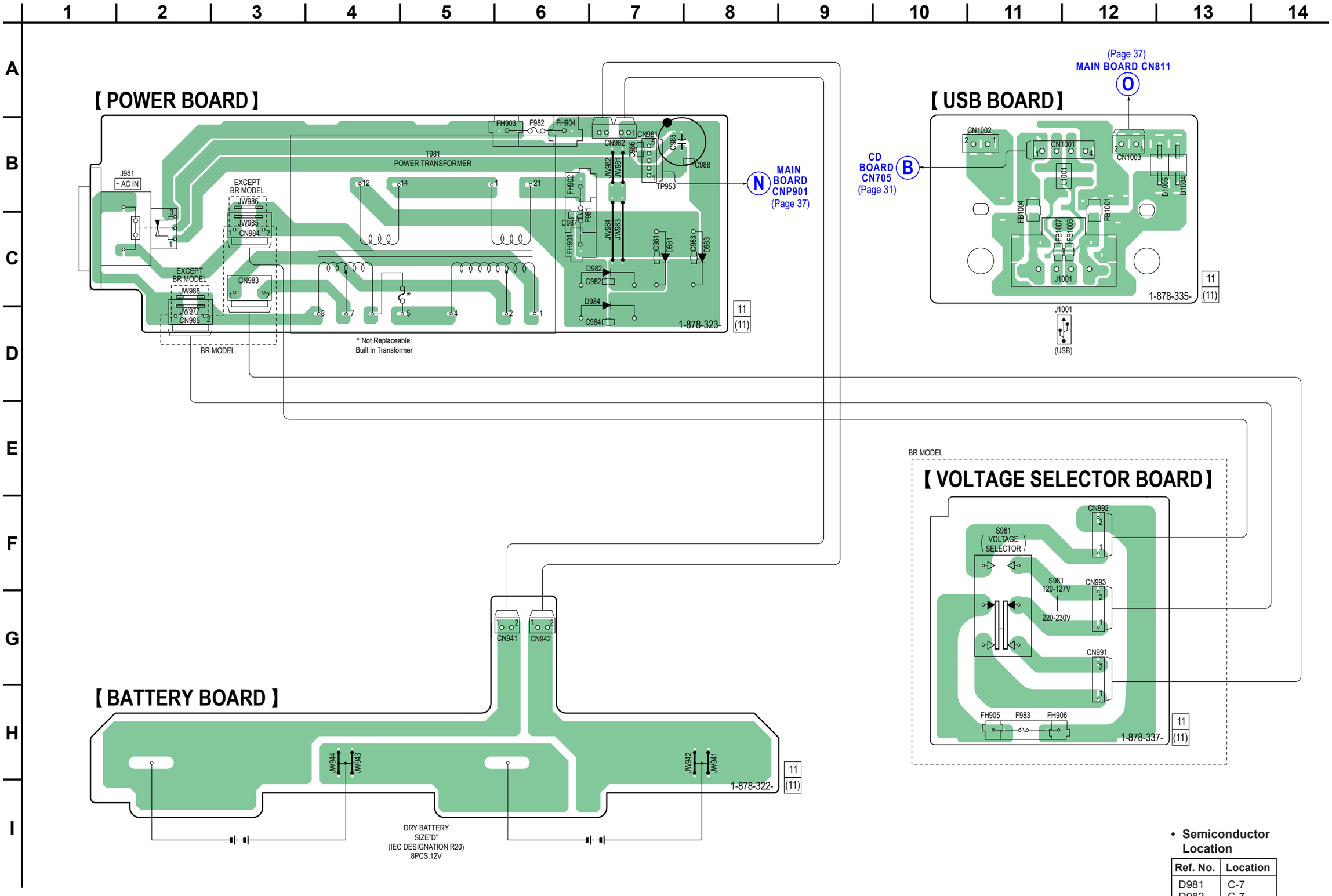

• **Semiconductor Location**

Ref. No.	Location
D981	C-7
D982	C-7
D983	C-8
D984	C-7
D1004	B-13
D1005	B-13

7-21. SCHEMATIC DIAGRAM – POWER Section –

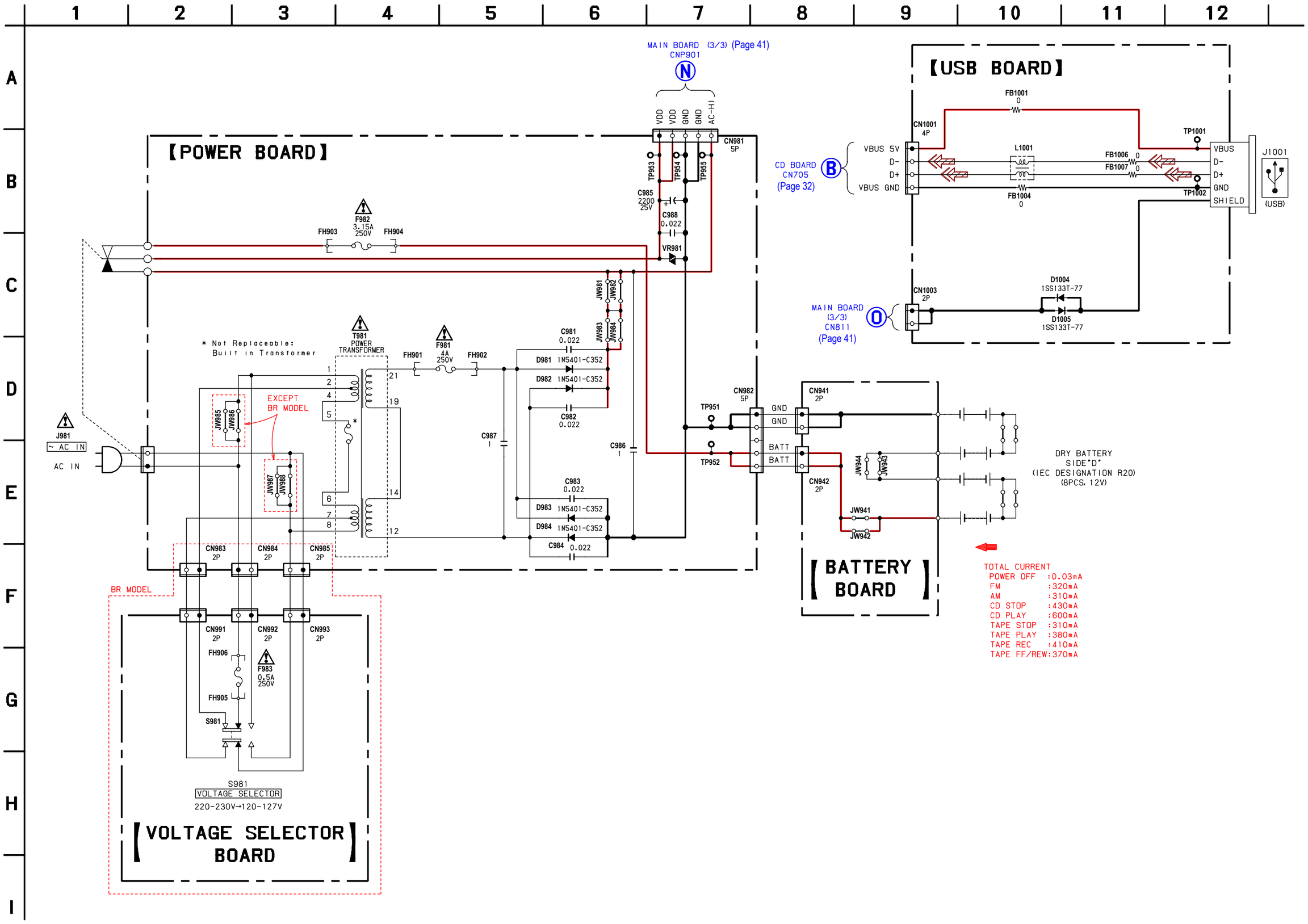

- **IC Block Diagrams**

IC701 LC786950T-US-H (CD Board)

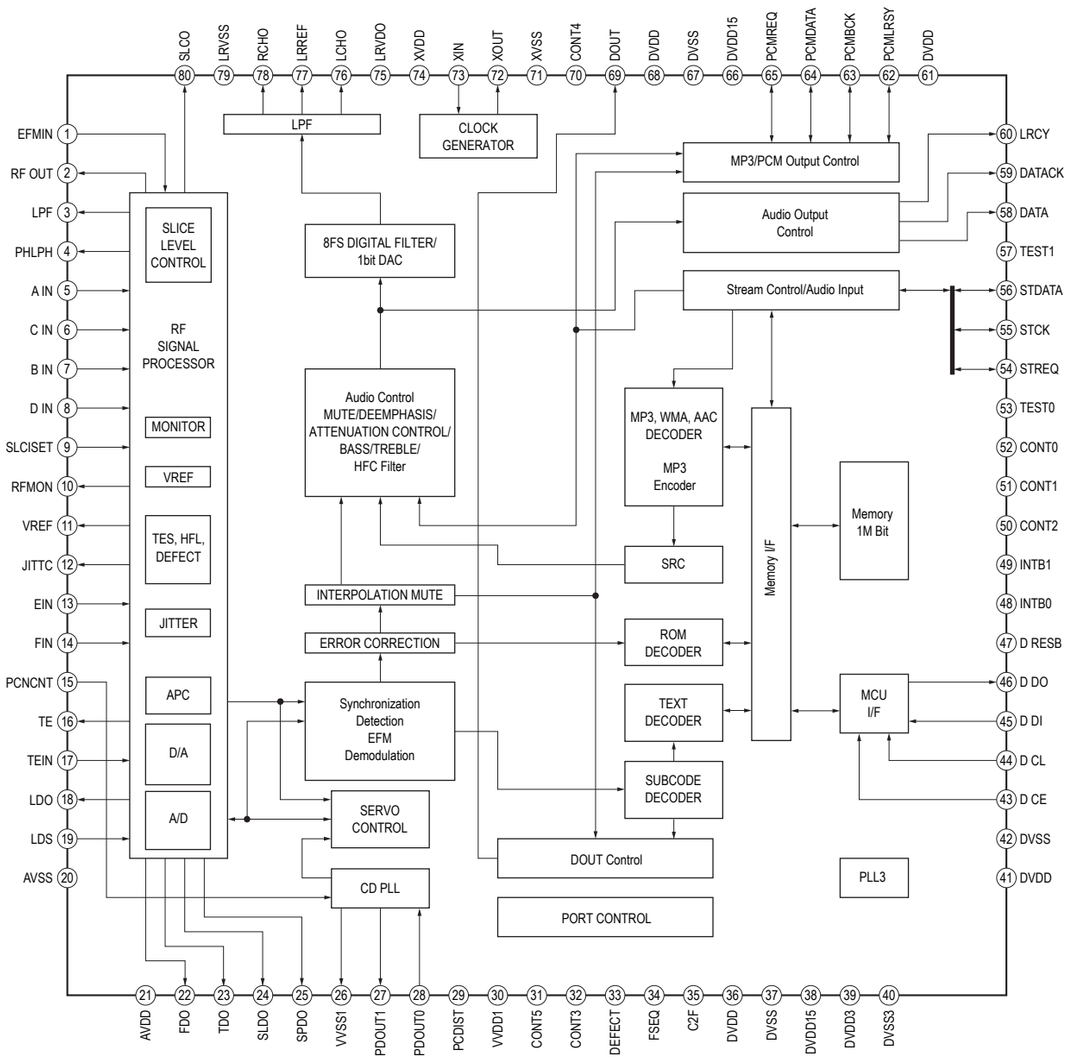

IC703 LA6548NHL-TE-L-E (CD Board)

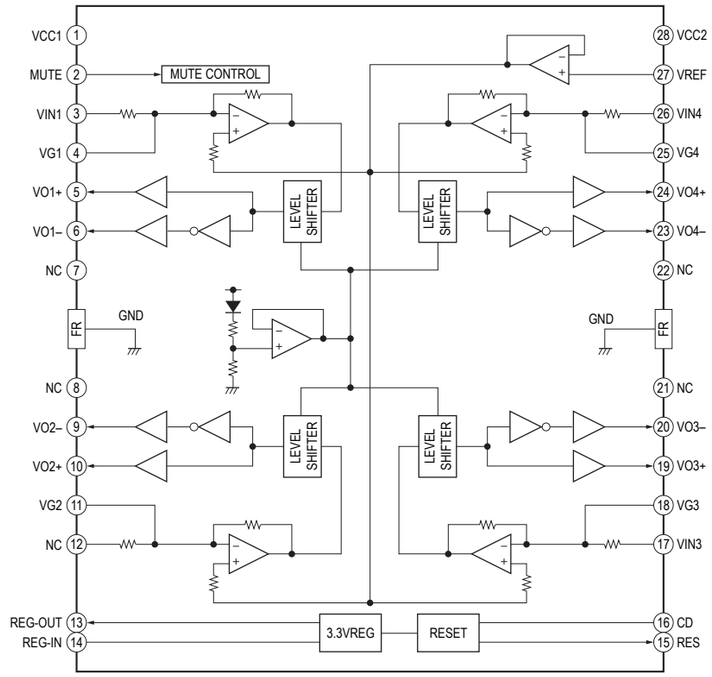

IC704 R5523N001B-TR-F (CD Board)

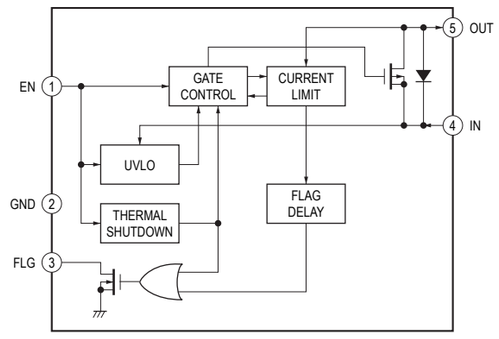

IC1 TA2149BN (TUNER Board)

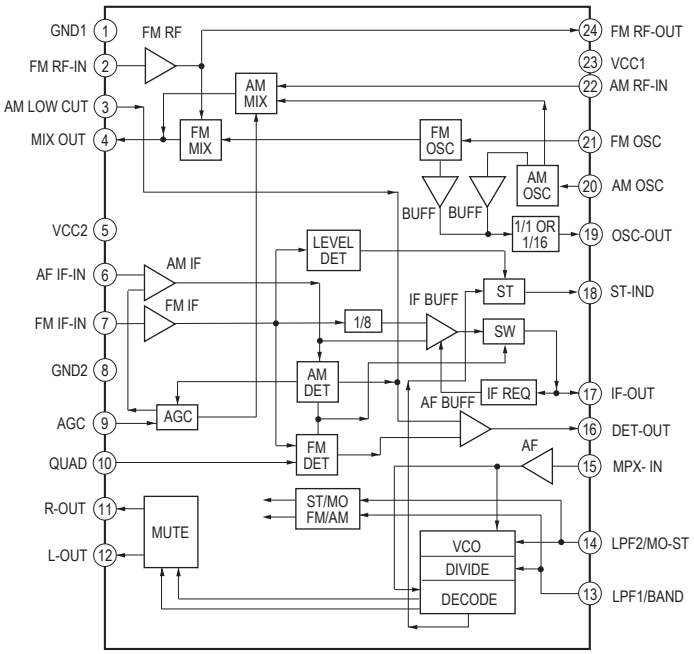

IC2 LC72137M-TLM-E (TUNER Board)

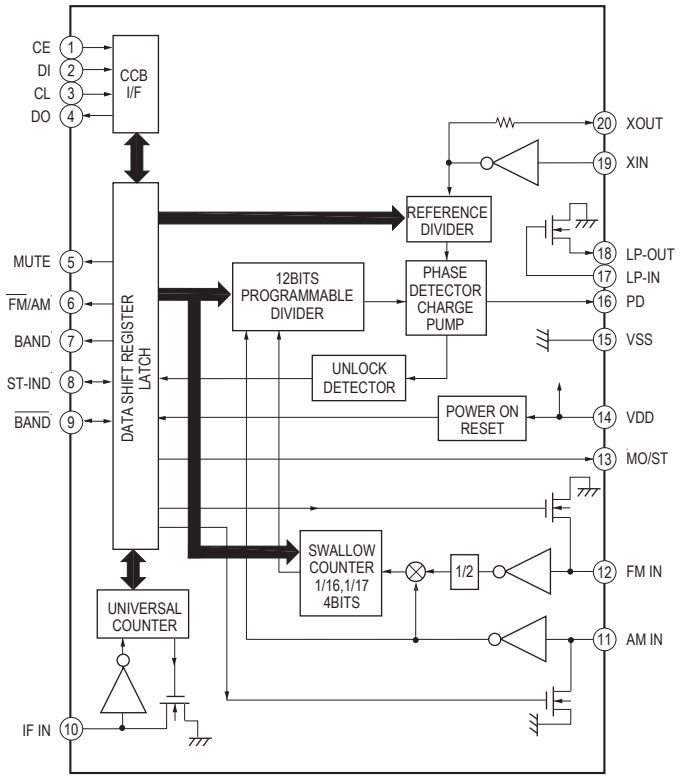

IC301 TA2068NG(5,HZ) (TC Board)

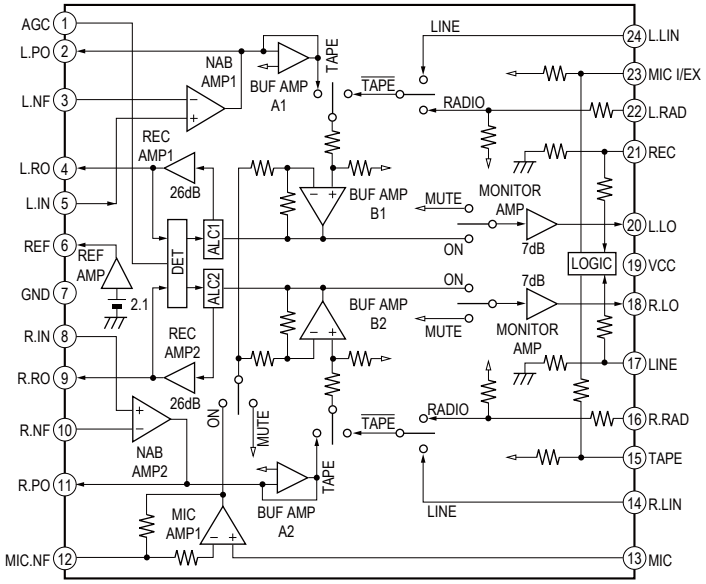

IC802 S-24CS02AFJ-TB-G (MAIN Board (1/3))

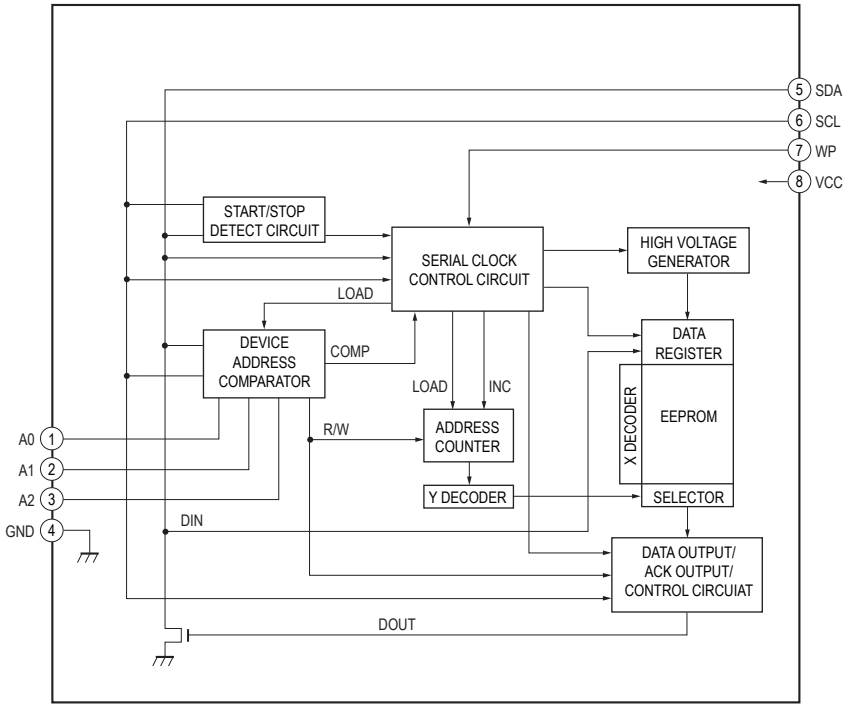

IC301 BD3499FV-E2 (MAIN Board (2/3))

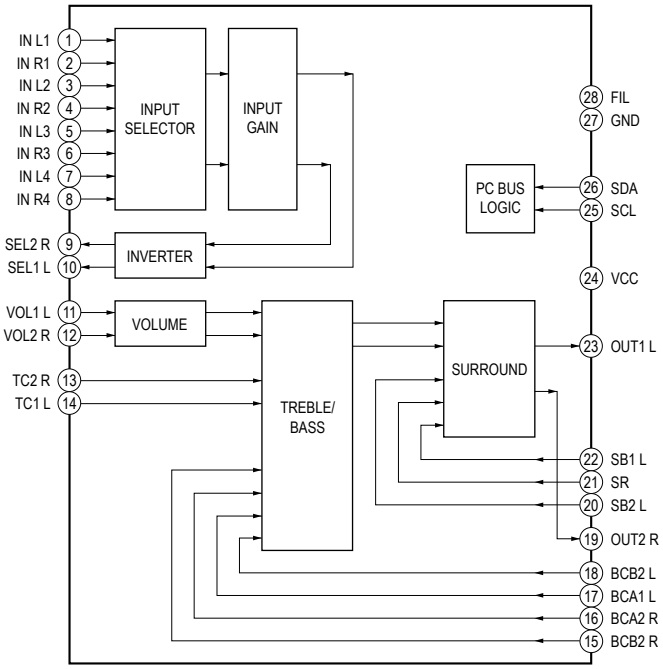

IC351 NJM14558V-TE2 (MAIN Board (3/3))

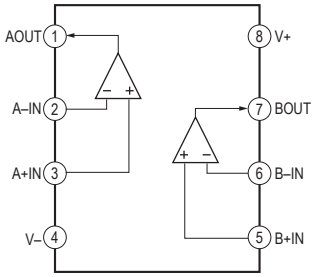

IC901 PQ1CZ21H2ZPH (MAIN Board (3/3))

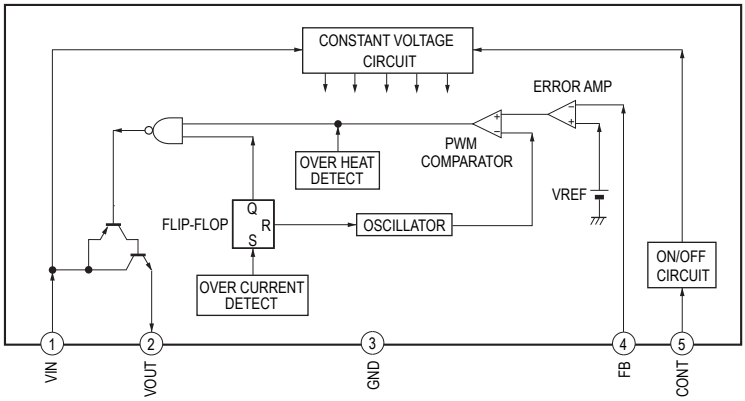

- **IC Pin Function Description**

CD BOARD IC702 LC87F1HC8AU-SQFP-E (USB I/F)

Pin No.	Pin Name	I/O	Description
1	P73/INT3	—	Not used. (Open)
2	RES	I	Reset signal input
3	XT1/AN10	—	Not used. (Connected to ground.)
4	XT2/AN11	—	Not used. (Open)
5	VSS1	—	Ground pin
6	CF1	I	Sub clock oscillation input (12MHz)
7	CF2	O	Sub clock oscillation output (12MHz)
8	VDD1	—	Power supply pin (+3.3 V)
9	P10/SO	O	CD DSP serial data signal output
10	P11/SI	I	CD DSP serial data signal input
11	P12/SCK	O	CD DSP serial transfer clock signal output
12	P13/SO1	—	Not used. (Open)
13	P14/SI1/SB1	—	Not used. (Open)
14	P15/SCK1	—	Not used. (Open)
15	P16/T1PWML/CE	O	CD DSP chip enable signal output
16	P17/T1PWMH/BUZ	—	Not used. (Open)
17	PWM1/MCLKI	—	Not used. (Open)
18	PWM0/MCLKO	—	Not used. (Open)
19	VDD2	—	Power supply pin (+3.3 V)
20	VSS2	—	Ground pin
21	P00/AN0	—	Not used. (Open)
22	P01/AN1	—	Not used. (Open)
23	P02/AN2/DBGP0	I	Not used. (Pull down)
24	P03/AN3/DBGP1	I	Not used. (Pull down)
25	P04/AN4/DBGP2	I	Not used. (Pull down)
26	P05/AN5/CK0/SDAT	I	Audio serial data signal input
27	P06/AN6/T60	I	Audio serial data shift clock signal input
28	P07/AN7/T70	I	Audio Lch/Rch data signal signal input
29	P20/INT4/INT6	—	Not used. (Open)
30	P21/INT4	—	Not used. (Open)
31	P22/INT4/SO4/RD	O	Stream data signal output
32	P23/INT4/SI4/WR	O	Audio data request signal output
33	P24/INT5/INT7/SCK4	O	Stream data bit clock signal output
34	P25/INT5/SO9/RD9	—	Not used. (Open)
35	P26/INT5/SI9/WR9	—	Not used. (Open)
36	P27/INT5/SCK9	—	Not used. (Open)
37	UHD–	I/O	USB data input/output
38	UHD+	I/O	USB data input/output
39	VDD3	—	Power supply pin (+3.3 V)
40	VSS3	—	Ground pin
41	P34/UFILT	—	USB I/F PLL filter pin
42	P33/AFILT	—	Not used. (Open)
43	P32	—	Not used. (Open)
44	P31/URX1	I	USB I/F command serial data input
45	P30/UTX1	O	USB I/F command serial data output
46	P70/INT0/TOLCP/AN8	I	Stream data request signal input
47	P71/INT1/TOHCP/AN9	I	USB host u-com control signal input
48	P72/INT2/TOIN	—	Not used. (Open)

MAIN BOARD IC801 LC87F7DC8AU-QIP-E (SYSTEM CONTROL)

Pin No.	Pin Name	I/O	Description
1	NC	—	Not used. (Open)
2	O-LCD-INH	O	LCD INH data signal output
3	O-LCD-DATA	O	LCD serial data signal output
4	O-LCD-CE	O	LCD chip enable signal output
5	O-LCD-SCL	O	LCD serial clock signal output
6	O-CD-DO	O	CD serial data signal output
7	I-CD-DI	I	CD serial data signal input
8	O-CD-CLK	O	CD serial clock signal output
9	EPROM-SCL	O	EEPROM serial clock signal output
10	EPROM-SDA	I/O	EEPROM serial data signal input/output
11	I-RES	I	Reset signal input
12	XT1	I	Connect to VDD.
13	XT2	O	Not used. (Open)
14	VSS1	—	Ground pin
15	CF1	I	Main system clock oscillation signal input (10MHz)
16	CF2	O	Main system clock oscillation signal output (10MHz)
17	VDD1	—	Power supply pin (+3.3V)
18	O-CLOCK SHIFT1	O	Clock shift signal output 1
19	O-CLOCK SHIFT2	O	Clock shift signal output 2
20	NC	—	Not used. (Open)
21	I-CD3.3V-CHK	I	CD +3.3V voltage check signal input
22	NC	—	Not used. (Open)
23	I-KEY0	I	A/D key signal input 0
24	I-KEY1	I	A/D key signal input 1
25	I-KEY2	I	A/D key signal input 2
26	I-KEY3	I	A/D key signal input 3
27	I-KEY4	I	A/D key signal input 4
28	I-WAKE UP	I	Wake up key signal input “H”: Active
29	I-RMC	I	Remote control signal input
30	$\overline{\text{I-SUFFIX 1}}$	I	Suffix distinction signal input 1
31	I-SUFFIX 2	I	Suffix distinction signal input 2
32	I-SUFFIX 3	I	Suffix distinction signal input 3
33	I-TU-COUNT	I	Tuner count signal input
34	O-TU-MUTE	O	Tuner mute signal output “H”: Tuner off, “L”: Tuner on
35	O-TC-CLK	O	Tuner serial clock signal output
36	O-TU-DATA	O	Tuner serial data signal output
37	O-TU-CE	O	Tuner chip enable signal output
38, 39	NC	—	Not used. (Open)
40	M-MUTE	O	Motor drive mute signal output
41	USB LED	O	USB memory with/without recognition LED control signal output “H”: With
42	USB REC LED	O	USB memory record confirmation LED control signal output
43	WOOFER LED1	O	Woofer LED turn on level setting signal output 1 (HIGH)
44	WOOFER LED2	O	Woofer LED turn on level setting signal output 2 (MID)
45	NC	—	Not used. (Open)
46	LED1	O	LED turn on control signal output 1
47	LED2	O	LED turn on control signal output 2
48	LED3	O	LED turn on control signal output 3
49	LED4	O	LED turn on control signal output 4
50	LED5	O	LED turn on control signal output 5
51	LED6	O	LED turn on control signal output 6
52	LED7	O	LED turn on control signal output 7
53	LED8	O	LED turn on control signal output 8
54	VDD2	—	Power supply pin (+3.3V)
55	VSS2	—	Ground pin
56	BACKLIGHT H	O	LCD back light LED control signal output H “H”: LED on, “L”: LED off

Pin No.	Pin Name	I/O	Description
57	BACKLIGHT L	O	LCD back light LED control signal output L “H”: LED on, “L”: LED off
58, 59	NC	—	Not used. (Open)
60	O-ISS1	O	Record bias frequency control signal output (Only AM recording)
61	O-ISS2	O	Record bias frequency control signal output (Only AM recording)
62	O-CD SW	O	CD function switch change signal output “H”: CD/USB, AUDIO-IN, “L”: TAPE, TUNER
63	O-TAPE	O	TAPE function switch change control signal output
64	I-TAPE PLAY	I	TAPE play control signal input
65	I-TAPE REC	I	TAPE record control signal input
66	O-VOL DATA	O	Volume IC serial data signal output
67	NC	—	Not used. (Open)
68	O-VOL CLK	O	Volume IC serial clock signal output
69 to 71	NC	—	Not used. (Open)
72	WOOFER 1/2	O	Sub woofer level change signal output
73	WOOFER ON/OFF	O	Sub woofer on/off control signal output
74	O-POWER	O	Power on control signal output
75	O-CD-ON	O	CD on control signal output
76	O-5V-ON	O	5V on control signal output
77	NC	—	Not used. (Open)
78	O-A-MUTE	O	Audio mute signal output
79	O-P-MUTE	O	Power drive woofer mute signal output
80	I-VH-CHK	I	Main voltage check signal input
81	I-REG6.2V-CHK	I	REG +6.2V check signal input
82	I-SPOUT-VOLTAGE	I	SPOUT voltage check signal input
83 to 86	NC	—	Not used. (Open)
87	I-CD LID	I	CD lid check signal input
88	I-AC CHECK	I	AC/DC check signal input “H”: DC, “L”: AC
89	VSS3	—	Ground pin
90	VDD3	—	Power supply pin (+3.3V)
91	USB-TXD	O	UART transmission signal output
92	USB-RXD	I	UART receive signal input
93	O-CD RES	O	CD/USB reset signal output
94	O-CD CE	O	CD I/F chip enable signal output
95	SUB V3	—	Flash write port 3
96	SUB V2	—	Flash write port 2
97	SUB V1	—	Flash write port 1
98	I-SW FLG	I	Hiside switch flag signal input
99	O-SW EN	O	Hiside switch enable signal output
100	O-USB SLEEP	O	USB sleep signal output

SECTION 8
EXPLODED VIEWS

Note:
- -XX and -X mean standardized parts, so they may have some difference from the original one.
- Items marked "*" are not stocked since they are seldom required for routine service. Some delay should be anticipated when ordering these items.
- The mechanical parts with no reference number in the exploded views are not supplied.
- Color Indication of Appearance Parts Example:
  KNOB, BALANCE (WHITE) . . . (RED)
  ↑ Parts Color ↑ Cabinet's Color
- Accessories are given in the last of the electrical parts list.

The components identified by mark ⚠ or dotted line with mark ⚠ are critical for safety.
Replace only with part number specified.

- Abbreviation
  BR : Brazilian model
  CET : East European & Russian model
  E41 : 230V AC area in E model
  E92 : 120V AC area in E model
  MX : Mexican model

8-1. OVERALL SECTION

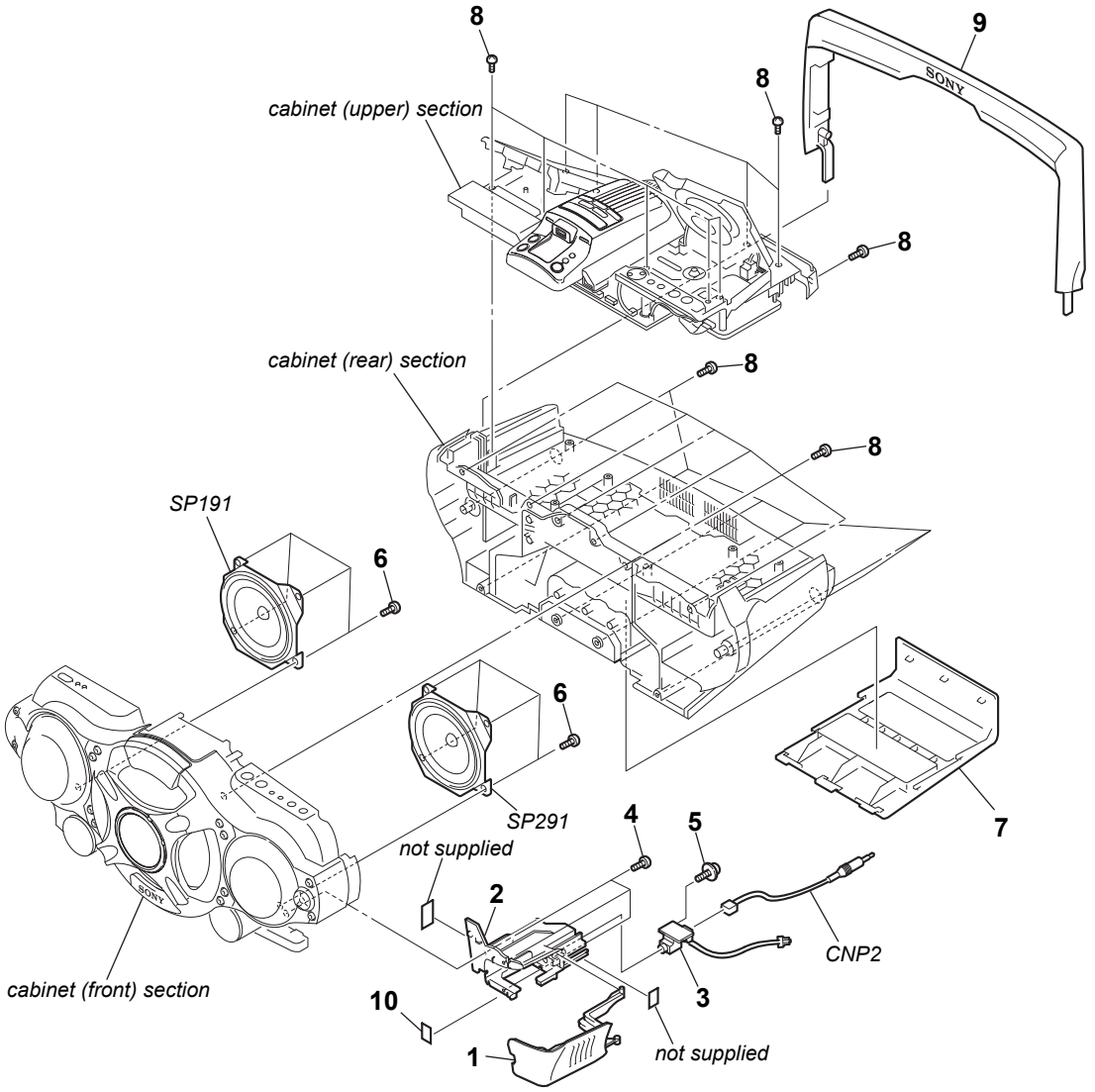

Ref. No.	Part No.	Description	Remark
1	2-895-570-11	LID, CORD CASE	
2	2-895-569-01	CASE, CORD	
3	A-1602-058-A	AUDIO IN BOARD, COMPLETE	
4	3-252-827-01	SCREW (B2.6), (+) BV TAPPING	
5	3-252-828-01	SCREW (B2.6), (+) PWH TAPPING	
6	3-254-143-11	SCREW (B3), (+) BV TAPPING	
7	2-895-573-01	LID, BATTERY	
8	3-254-145-11	SCREW (B3), (+) BV TAPPING	
9	2-895-574-02	HANDLE	
10	3-211-597-01	CUSHION (B)	
CNP2	1-833-922-11	CORD, CONNECTION (WITH PLUG) (AUDIO IN)	
SP191	1-858-162-21	LOUD SPEAKER (L-CH) (FULL RANGE)	
SP291	1-858-162-21	LOUD SPEAKER (R-CH) (FULL RANGE)	

8-2. CABINET (FRONT) SECTION

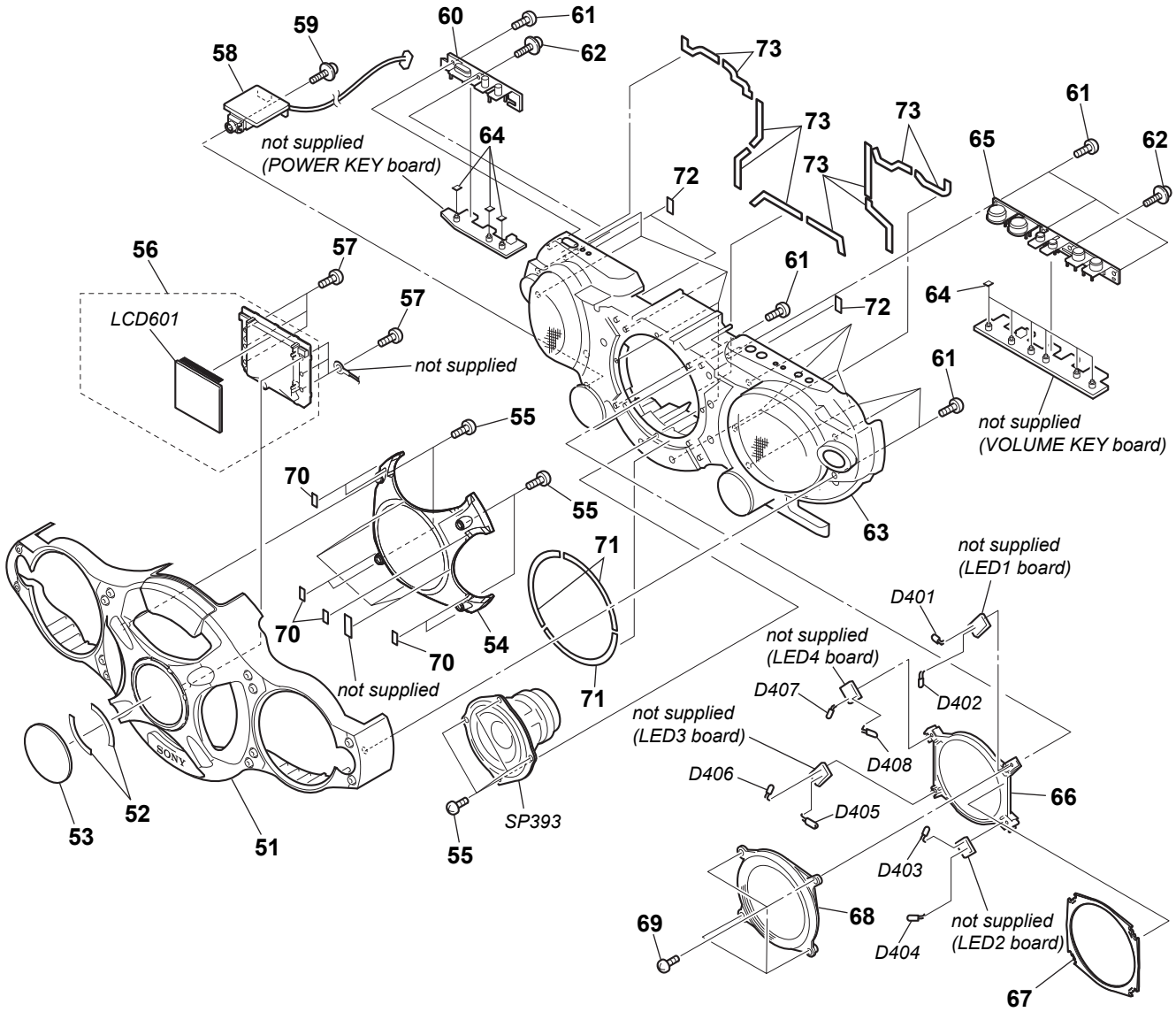

Ref. No.	Part No.	Description	Remark
51	X-2319-424-1	PANEL (FRONT) SUB ASSY	
52	4-121-896-01	SHEET (LCD WINDOW), ADHESIVE	
53	4-110-350-01	WINDOW, LCD	
54	4-110-353-01	COVER, PANEL	
55	3-252-827-01	SCREW (B2.6), (+) BV TAPPING	
56	A-1602-060-A	LCD BOARD, COMPLETE	
57	3-254-151-01	SCREW (B2.6), (+) P TAPPING	
58	A-1602-059-A	HEADPHONE BOARD, COMPLETE	
59	3-252-830-01	SCREW (B3), (+) PWH TAPPING	
60	2-895-584-11	BUTTON, POWER (EXCEPT CET)	
60	2-895-584-21	BUTTON, POWER (CET)	
61	3-252-827-01	SCREW (B2.6), (+) BV TAPPING	
62	3-252-828-01	SCREW (B2.6), (+) PWH TAPPING	
63	X-2319-423-1	CABINET (FRONT) SUB ASSY	
64	3-831-441-99	SHEET (1)	
65	2-895-585-11	BUTTON, TUNE	
66	2-895-579-01	HOLDER, RING	

Ref. No.	Part No.	Description	Remark
67	2-895-576-01	RING, LIGHT GUIDE	
68	2-895-575-01	RING, ORNAMENTAL	
69	3-254-140-01	SCREW (B2.6), (+) BV TAPPING	
70	3-211-597-01	CUSHION (B)	
71	3-198-219-01	CUSHION, CAP	
72	3-831-441-99	CUSHION, STOPPER	
73	3-243-076-01	WOVEN (90), FABRIC NON	
D401	6-501-691-01	LED 1L434FV22D0TDF01 (ILLUMINATION)	
D402	6-501-691-01	LED 1L434FV22D0TDF01 (ILLUMINATION)	
D403	6-501-691-01	LED 1L434FV22D0TDF01 (ILLUMINATION)	
D404	6-501-691-01	LED 1L434FV22D0TDF01 (ILLUMINATION)	
D405	6-501-691-01	LED 1L434FV22D0TDF01 (ILLUMINATION)	
D406	6-501-691-01	LED 1L434FV22D0TDF01 (ILLUMINATION)	
D407	6-501-691-01	LED 1L434FV22D0TDF01 (ILLUMINATION)	
D408	6-501-691-01	LED 1L434FV22D0TDF01 (ILLUMINATION)	
LCD601	1-802-838-11	LIQUID CRYSTAL ELEMENT	
SP393	1-826-683-11	SPEAKER (13cm) (WOOFER)	

8-3. CABINET (REAR) SECTION

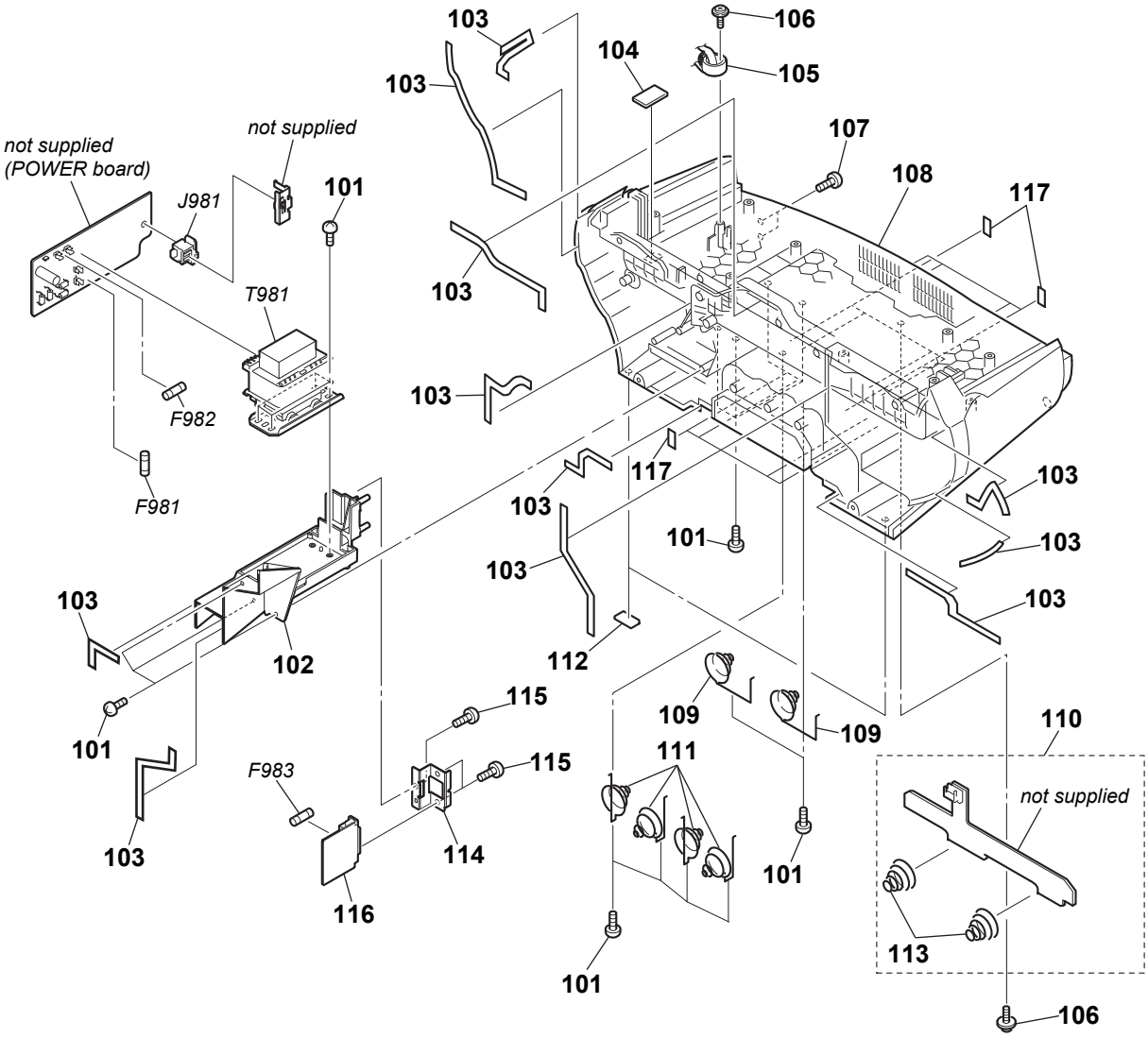

Ref. No.	Part No.	Description	Remark
101	3-254-143-11	SCREW (B3), (+) BV TAPPING	
102	4-110-348-01	HOLDER, TRANSFORMER	
103	3-198-219-01	CUSHION, CAP	
104	3-096-719-01	SHEET (REAR)	
105	1-500-868-11	CORE, FERRITE	
106	3-252-830-01	SCREW (B3), (+) PWH TAPPING	
107	3-254-145-11	SCREW (B3), (+) BV TAPPING	
108	2-895-565-21	CABINET (REAR) (E92,MX)	
108	2-895-565-31	CABINET (REAR) (CET,E41)	
108	2-895-565-41	CABINET (REAR) (BR)	
109	2-895-597-01	TERMINAL (+, –), BATTERY	
110	A-1602-053-A	BATTERY BOARD, COMPLETE	
111	2-067-415-01	TERMINAL (+, –), BATTERY	
112	4-233-372-02	FOOT (FELT)	

Ref. No.	Part No.	Description	Remark
113	3-238-135-01	TERMINAL (–), BATTERY	
114	4-113-367-01	BRACKET (SWITCH) (BR)	
115	3-252-827-01	SCREW (B2.6), (+) BV TAPPING (BR)	
116	1-878-337-11	VOLTAGE SELECTOR BOARD (BR)	
117	3-211-597-01	CUSHION (B)	
⚠ F981	1-533-471-12	FUSE, GLASS TUBE (DIA. 5) (4A/250V)	
⚠ F982	1-533-470-12	FUSE, GLASS TUBE (DIA. 5) (3.15A/250V)	
⚠ F983	1-533-462-12	FUSE, GLASS TUBE (DIA. 5) (0.5A/250V) (BR)	
⚠ J981	1-526-838-11	INLET, AC 2P (∿ AC IN) (CET,E41,BR)	
⚠ J981	1-540-009-12	INLET, AC (∿ AC IN) (E92,MX)	
⚠ T981	1-435-964-12	TRANSFORMER, POWER (E92,MX)	
⚠ T981	1-435-965-12	TRANSFORMER, POWER (CET,E41)	
⚠ T981	1-435-966-12	TRANSFORMER, POWER (BR)	

8-4. CABINET (UPPER) SECTION-1

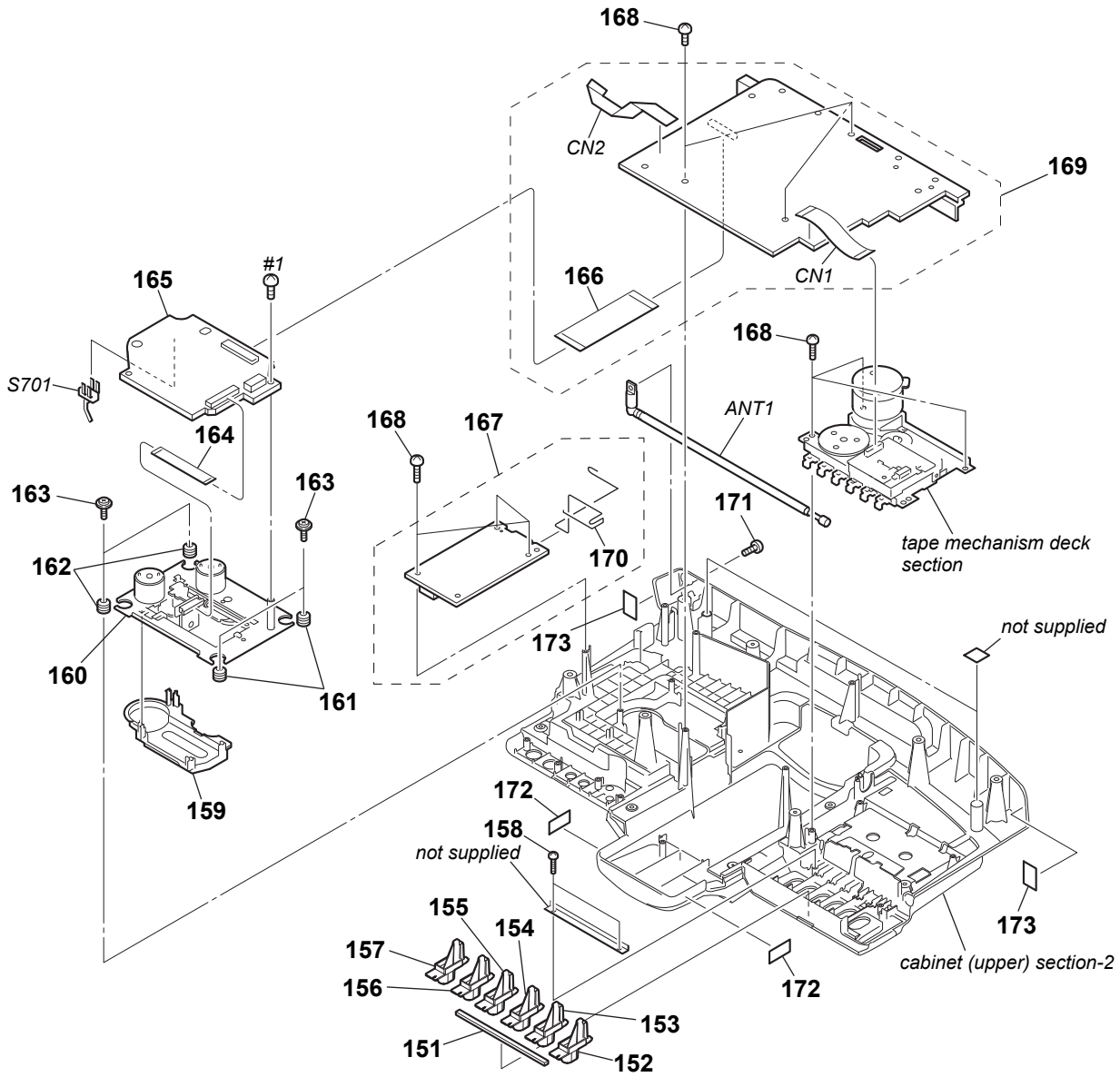

Ref. No.	Part No.	Description	Remark
151	2-108-743-01	CUSHION, KEY CASSETTE	
152	2-895-588-01	BUTTON, REC	
153	2-895-589-01	BUTTON, PLAY	
154	2-895-590-01	BUTTON, REW	
155	2-895-591-01	BUTTON, FF	
156	2-895-592-01	BUTTON, STOP	
157	2-895-593-01	BUTTON, PAUSE	
158	3-252-827-01	SCREW (B2.6), (+) BV TAPPING	
159	3-923-736-01	COVER, CD	
⚠ 160	8-820-126-02	OPTICAL PICK-UP (KSM-213CDP/C2NP)	
161	3-931-379-21	RUBBER, VIBRATION PROOF	
162	3-931-379-31	RUBBER, VIBRATION PROOF	
163	3-252-828-01	SCREW (B2.6), (+) PWH TAPPING	
164	1-832-404-21	CABLE, FLEXIBLE FLAT (16 CORE)	
165	A-1602-062-A	CD BOARD, COMPLETE	
166	1-836-363-31	CABLE, FLEXIBLE FLAT (25 CORE)	

Ref. No.	Part No.	Description	Remark
167	A-1244-419-A	TUNER BOARD, COMPLETE	
168	3-254-143-11	SCREW (B3), (+) BV TAPPING	
169	A-1602-050-A	MAIN BOARD, COMPLETE (MX)	
169	A-1633-759-A	MAIN BOARD, COMPLETE (E41)	
169	A-1633-761-A	MAIN BOARD, COMPLETE (CET,E92)	
169	A-1633-763-A	MAIN BOARD, COMPLETE (BR)	
170	2-895-061-01	TERMINAL, ANTENNA	
171	3-252-833-01	SCREW (M3), (+) P	
172	3-211-597-01	CUSHION (B)	
173	3-831-441-99	CUSHION, STOPPER	
ANT1	1-754-376-11	ANTENNA, TELESCOPIC (FM)	
CN1	1-836-362-31	CABLE, FLEXIBLE FLAT (13 CORE)	
CN2	1-832-425-31	CABLE, FLEXIBLE FLAT (11 CORE)	
S701	1-572-085-21	SWITCH, LEAF (LIMIT)	
#1	7-685-853-04	SCREW +BVTT 2X6 (S)	

8-5. CABINET (UPPER) SECTION-2

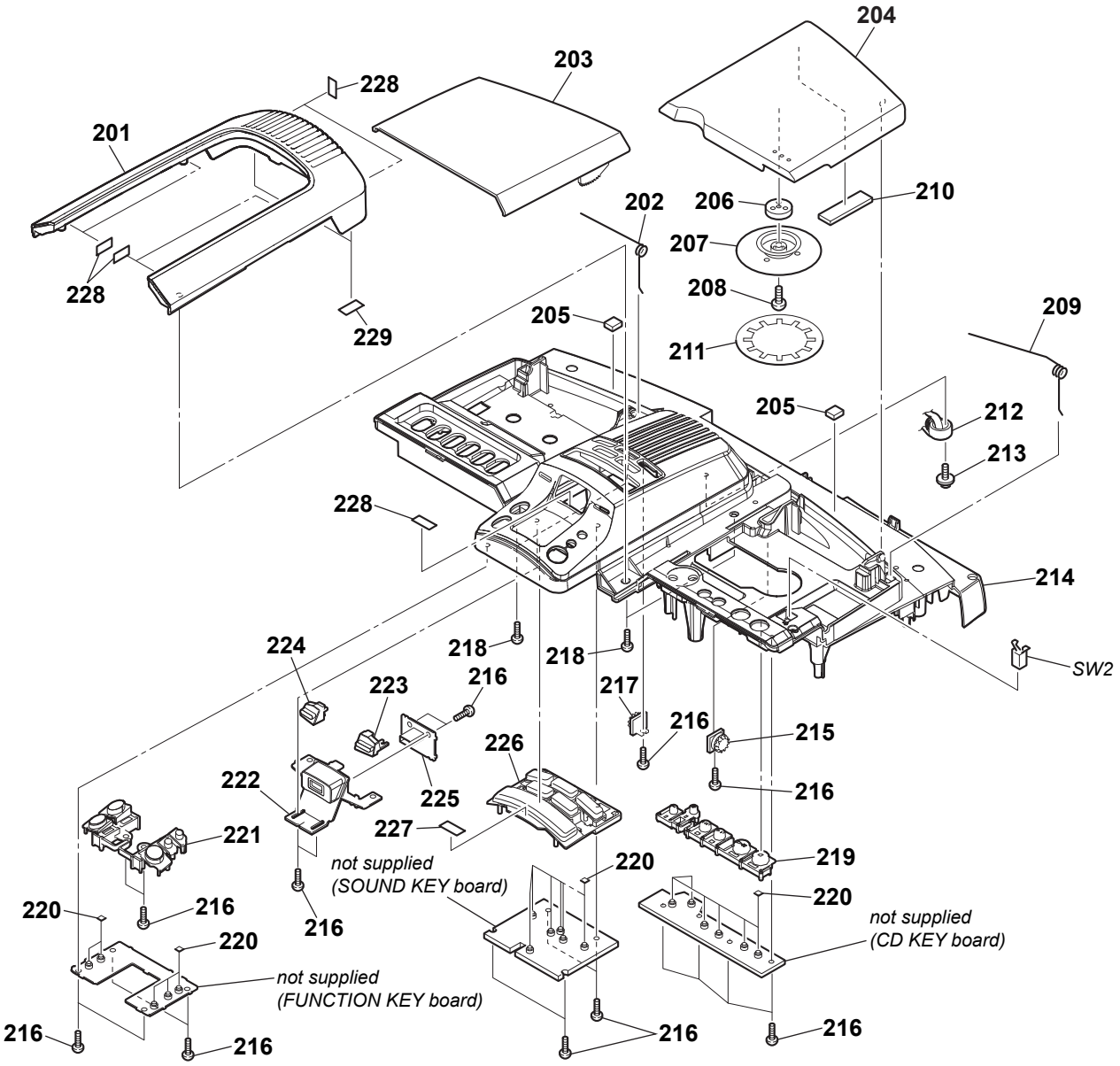

Ref. No.	Part No.	Description	Remark
201	2-895-568-21	PANEL (UPPER)	
202	2-895-060-01	SPRING, CASSETTE	
203	2-895-572-31	LID, CASSETTE	
204	2-895-571-02	LID, CD	
205	3-210-713-01	CUSHION, RUBBER	
206	1-452-899-11	MAGNET	
207	3-019-395-01	PLATE, CHUCKING	
208	3-253-143-01	SCREW (B2.6), (+) P TAPPING	
209	2-895-059-01	SPRING, CD	
210	3-212-679-01	CUSHION (C)	
211	3-258-284-01	SHEET (CHUCK)	
212	1-500-868-11	CORE, FERRITE	
213	3-252-830-01	SCREW (B3), (+) PWH TAPPING	
214	4-110-342-01	CABINET (UPPER)	
215	3-047-468-11	DAMPER	

Ref. No.	Part No.	Description	Remark
216	3-252-827-01	SCREW (B2.6), (+) BV TAPPING	
217	3-047-468-01	DAMPER	
218	3-254-143-11	SCREW (B3), (+) BV TAPPING	
219	2-895-586-01	BUTTON, CD	
220	3-831-441-99	SHEET (1)	
221	4-110-344-01	BUTTON, FUNCTION	
222	4-110-347-01	HOLDER, USB	
223	4-110-346-01	ILLUMINATION (R)	
224	4-110-345-01	ILLUMINATION (L)	
225	A-1602-158-A	USB BOARD, COMPLETE	
226	4-110-343-01	BUTTON, SOUND	
227	3-831-441-11	CUSHION (B)	
228	3-831-441-99	CUSHION, STOPPER	
229	4-134-435-01	CUSHION (A)	
SW2	1-692-960-11	SWITCH, PUSH (1 KEY) (⏏ PUSH OPEN/CLOSE)	

8-6. TAPE MECHANISM DECK SECTION

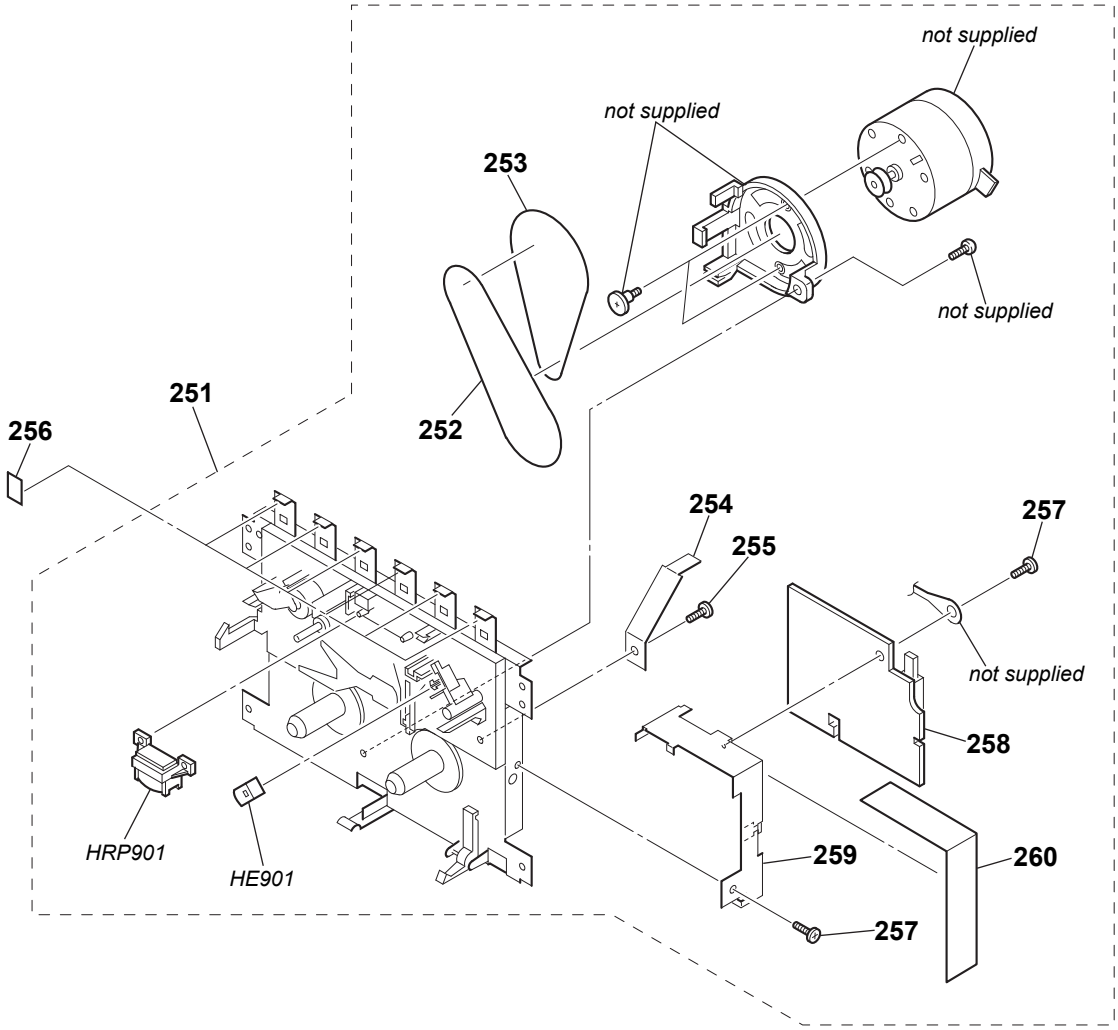

Ref. No.	Part No.	Description	Remark
251	A-1602-047-A	MD BLOCK ASSY	
252	4-137-548-01	BELT (RF)	
253	4-137-547-01	BELT (MAIN)	
254	3-237-718-01	LEVER, REC	
255	3-254-022-01	SCREW	
256	3-211-597-01	CUSHION (B)	
257	3-254-029-01	SCREW	
258	A-1108-791-A	TC BORD BOARD, COMPLETE	
259	3-252-614-01	CHASSIS, TC	
260	3-243-076-01	WOVEN (90), FABRIC NON	
HE901	1-500-813-11	HEAD, ERASE (ERASE)	
HRP901	3-266-053-01	HEAD, RP (REC/PB)	

AUDIO IN | BATTERY | CD

SECTION 9
ELECTRICAL PARTS LIST

Note:
- Due to standardization, replacements in the parts list may be different from the parts specified in the diagrams or the components used on the set.
- -XX and -X mean standardized parts, so they may have some difference from the original one.
- Items marked "*" are not stocked since they are seldom required for routine service. Some delay should be anticipated when ordering these items.
- RESISTORS
  All resistors are in ohms.
  METAL: Metal-film resistor.
  METAL OXIDE: Metal oxide-film resistor.
  F: nonflammable
- CAPACITORS
  uF: µF
- COILS
  uH: µH
- SEMICONDUCTORS
  In each case, u: µ, for example:
  uA. . : µA. . , uPA. . , µPA. . ,
  uPB. . : µPB. . , uPC. . , µPC. . ,
  uPD. . : µPD. .
- Abbreviation
  BR : Brazilian model
  CET : East European & Russian model
  E41 : 230V AC area in E model
  E92 : 120V AC area in E model
  MX : Mexican model

When indicating parts by reference number, please include the board name.

The components identified by mark ⚠ or dotted line with mark ⚠ are critical for safety.
Replace only with part number specified.

Ref. No.	Part No.	Description				Remark
	A-1602-058-A	AUDIO IN BOARD, COMPLETE				
		**********				
		< CONNECTOR >				
CNP372	1-815-551-11	PIN, CONNECTOR (PWB) 3P				
		< FERRITE BEAD >				
FB101	1-414-760-21	FERRITE, EMI (SMD) (1608)				
FB201	1-414-760-21	FERRITE, EMI (SMD) (1608)				
FB301	1-414-760-21	FERRITE, EMI (SMD) (1608)				
		< JACK >				
J371	1-815-629-11	JACK (AUDIO IN)				
		< JUMPER RESISTOR >				
JC171	1-216-864-11	SHORT CHIP	0			
R171	1-216-864-11	SHORT CHIP	0			
R271	1-216-864-11	SHORT CHIP	0			
**********						
	A-1602-053-A	BATTERY BOARD, COMPLETE				
		**********				
	3-238-135-01	TERMINAL (–), BATTERY				
		< CONNECTOR >				
CN941	1-815-550-11	PIN, CONNECTOR (PWB) 2P				
CN942	1-815-550-21	PIN, CONNECTOR (PWB) 2P				
**********						
	A-1602-062-A	CD BOARD, COMPLETE				
		**********				
		< CAPACITOR >				
C501	1-164-943-81	CERAMIC CHIP	0.01uF	10%	16V	
C502	1-107-826-11	CERAMIC CHIP	0.1uF	10%	16V	
C503	1-164-943-81	CERAMIC CHIP	0.01uF	10%	16V	
C504	1-125-777-11	CERAMIC CHIP	0.1uF	10%	10V	
C505	1-128-396-11	ELECT CHIP	470uF	20%	10V	
C506	1-125-777-11	CERAMIC CHIP	0.1uF	10%	10V	
C507	1-125-777-11	CERAMIC CHIP	0.1uF	10%	10V	
C510	1-125-777-11	CERAMIC CHIP	0.1uF	10%	10V	
C514	1-164-941-11	CERAMIC CHIP	0.0047uF	10%	16V	
C519	1-164-941-11	CERAMIC CHIP	0.0047uF	10%	16V	
C523	1-164-858-11	CERAMIC CHIP	22PF	5%	50V	
C524	1-164-858-11	CERAMIC CHIP	22PF	5%	50V	
C527	1-100-415-11	CERAMIC CHIP	0.47uF	10%	6.3V	
C528	1-100-415-11	CERAMIC CHIP	0.47uF	10%	6.3V	
C529	1-164-937-11	CERAMIC CHIP	0.001uF	10%	50V	
C530	1-107-826-11	CERAMIC CHIP	0.1uF	10%	16V	
C701	1-164-941-11	CERAMIC CHIP	0.0047uF	10%	16V	
C702	1-164-943-81	CERAMIC CHIP	0.01uF	10%	16V	
C703	1-125-777-11	CERAMIC CHIP	0.1uF	10%	10V	
C704	1-125-777-11	CERAMIC CHIP	0.1uF	10%	10V	
C706	1-128-995-21	ELECT CHIP	100uF	20%	10V	
C707	1-128-995-21	ELECT CHIP	100uF	20%	10V	
C708	1-164-943-81	CERAMIC CHIP	0.01uF	10%	16V	
C709	1-107-819-11	CERAMIC CHIP	0.022uF	10%	16V	
C710	1-125-777-11	CERAMIC CHIP	0.1uF	10%	10V	
C711	1-164-943-81	CERAMIC CHIP	0.01uF	10%	16V	
C712	1-112-717-11	CERAMIC CHIP	1uF	10%	6.3V	
C713	1-128-994-21	ELECT CHIP	47uF	20%	10V	
C714	1-164-937-11	CERAMIC CHIP	0.001uF	10%	50V	
C715	1-125-777-11	CERAMIC CHIP	0.1uF	10%	10V	
C716	1-125-777-11	CERAMIC CHIP	0.1uF	10%	10V	
C717	1-125-777-11	CERAMIC CHIP	0.1uF	10%	10V	
C718	1-128-995-21	ELECT CHIP	100uF	20%	10V	
C719	1-165-887-11	CERAMIC CHIP	0.22uF	10%	6.3V	
C721	1-107-819-11	CERAMIC CHIP	0.022uF	10%	16V	
C722	1-125-777-11	CERAMIC CHIP	0.1uF	10%	10V	
C723	1-125-777-11	CERAMIC CHIP	0.1uF	10%	10V	
C724	1-125-777-11	CERAMIC CHIP	0.1uF	10%	10V	
C725	1-125-777-11	CERAMIC CHIP	0.1uF	10%	10V	
C726	1-125-777-11	CERAMIC CHIP	0.1uF	10%	10V	
C727	1-128-995-21	ELECT CHIP	100uF	20%	10V	
C728	1-125-777-11	CERAMIC CHIP	0.1uF	10%	10V	
C729	1-125-777-11	CERAMIC CHIP	0.1uF	10%	10V	
C730	1-164-866-11	CERAMIC CHIP	47PF	5%	50V	
C731	1-164-866-11	CERAMIC CHIP	47PF	5%	50V	
C732	1-164-866-11	CERAMIC CHIP	47PF	5%	50V	
C733	1-164-866-11	CERAMIC CHIP	47PF	5%	50V	
C734	1-164-943-81	CERAMIC CHIP	0.01uF	10%	16V	
C735	1-164-858-11	CERAMIC CHIP	22PF	5%	50V	
C736	1-164-858-11	CERAMIC CHIP	22PF	5%	50V	
C737	1-164-858-11	CERAMIC CHIP	22PF	5%	50V	
C738	1-164-858-11	CERAMIC CHIP	22PF	5%	50V	
C739	1-164-858-11	CERAMIC CHIP	22PF	5%	50V	
C740	1-125-777-11	CERAMIC CHIP	0.1uF	10%	10V	
C741	1-128-394-11	ELECT CHIP	220uF	20%	10V	
C742	1-125-777-11	CERAMIC CHIP	0.1uF	10%	10V	
C743	1-164-858-11	CERAMIC CHIP	22PF	5%	50V	

Ref. No.	Part No.	Description			Remark
C744	1-164-858-11	CERAMIC CHIP	22PF	5%	50V
C745	1-164-858-11	CERAMIC CHIP	22PF	5%	50V
C746	1-164-858-11	CERAMIC CHIP	22PF	5%	50V
C747	1-125-777-11	CERAMIC CHIP	0.1uF	10%	10V
C748	1-128-995-21	ELECT CHIP	100uF	20%	10V
C749	1-125-777-11	CERAMIC CHIP	0.1uF	10%	10V
C754	1-125-777-11	CERAMIC CHIP	0.1uF	10%	10V
C755	1-125-777-11	CERAMIC CHIP	0.1uF	10%	10V
C756	1-128-394-11	ELECT CHIP	220uF	20%	10V
C757	1-125-777-11	CERAMIC CHIP	0.1uF	10%	10V
C758	1-128-995-21	ELECT CHIP	100uF	20%	10V
C759	1-119-923-11	CERAMIC CHIP	0.047uF	10%	10V
C764	1-125-777-11	CERAMIC CHIP	0.1uF	10%	10V
C765	1-128-394-11	ELECT CHIP	220uF	20%	10V
C766	1-125-777-11	CERAMIC CHIP	0.1uF	10%	10V
C768	1-164-943-81	CERAMIC CHIP	0.01uF	10%	16V
C773	1-125-777-11	CERAMIC CHIP	0.1uF	10%	10V
C776	1-164-866-11	CERAMIC CHIP	47PF	5%	50V
C777	1-164-866-11	CERAMIC CHIP	47PF	5%	50V
C778	1-164-866-11	CERAMIC CHIP	47PF	5%	50V
C779	1-164-866-11	CERAMIC CHIP	47PF	5%	50V
C781	1-125-777-11	CERAMIC CHIP	0.1uF	10%	10V
C782	1-164-858-11	CERAMIC CHIP	22PF	5%	50V
C783	1-164-858-11	CERAMIC CHIP	22PF	5%	50V
C784	1-164-858-11	CERAMIC CHIP	22PF	5%	50V
C785	1-164-858-11	CERAMIC CHIP	22PF	5%	50V
C786	1-164-858-11	CERAMIC CHIP	22PF	5%	50V
C787	1-164-858-11	CERAMIC CHIP	22PF	5%	50V
C788	1-164-858-11	CERAMIC CHIP	22PF	5%	50V
C789	1-164-858-11	CERAMIC CHIP	22PF	5%	50V
C790	1-164-850-11	CERAMIC CHIP	10PF	0.5PF	50V
C791	1-164-850-11	CERAMIC CHIP	10PF	0.5PF	50V
C792	1-125-777-11	CERAMIC CHIP	0.1uF	10%	10V
C794	1-126-601-11	ELECT CHIP	2.2uF	20%	50V
C797	1-164-866-11	CERAMIC CHIP	47PF	5%	50V
C798	1-164-866-11	CERAMIC CHIP	47PF	5%	50V
C799	1-164-858-11	CERAMIC CHIP	22PF	5%	50V
		< CONNECTOR >			
CN701	1-770-425-51	CONNECTOR, FFC/FPC 16P			
CN704	1-784-875-51	CONNECTOR, FFC (LIF(NON-ZIF)) 25P			
* CN705	1-750-005-11	PIN, CONNECTOR (PC BOARD) 4P			
		< FERRITE BEAD >			
FB701	1-216-864-11	SHORT CHIP	0		
FB702	1-216-864-11	SHORT CHIP	0		
FB703	1-216-864-11	SHORT CHIP	0		
FB704	1-216-864-11	SHORT CHIP	0		
FB705	1-469-670-21	FERRITE, EMI (SMD) (2012)			
FB706	1-216-295-11	SHORT CHIP	0		
		< IC >			
IC701	(Not supplied)	IC LC786950T-US-H			
IC702	(Not supplied)	IC LC87F1HC8AU-SQFP-E			
IC703	6-713-078-01	IC LA6548NHL-TE-L-E			
IC704	6-710-887-01	IC R5523N001B-TR-F			
		< TRANSISTOR >			
Q701	6-551-696-01	TRANSISTOR ISA1235AC1TP-1EF			

Ref. No.	Part No.	Description			Remark
		< RESISTOR >			
R501	1-218-969-11	METAL CHIP	22K	5%	1/16W
R502	1-218-949-11	METAL CHIP	470	5%	1/16W
R503	1-218-965-11	METAL CHIP	10K	5%	1/16W
R504	1-218-957-11	METAL CHIP	2.2K	5%	1/16W
R505	1-218-961-11	METAL CHIP	4.7K	5%	1/16W
R506	1-218-953-11	METAL CHIP	1K	5%	1/16W
R507	1-218-961-11	METAL CHIP	4.7K	5%	1/16W
R508	1-218-957-11	METAL CHIP	2.2K	5%	1/16W
R509	1-218-961-11	METAL CHIP	4.7K	5%	1/16W
R510	1-218-957-11	METAL CHIP	2.2K	5%	1/16W
R511	1-218-965-11	METAL CHIP	10K	5%	1/16W
R513	1-218-977-11	METAL CHIP	100K	5%	1/16W
R514	1-218-945-11	METAL CHIP	220	5%	1/16W
R517	1-218-990-81	SHORT CHIP	0		
R518	1-218-945-11	METAL CHIP	220	5%	1/16W
R521	1-218-990-81	SHORT CHIP	0		
R522	1-218-990-81	SHORT CHIP	0		
R523	1-218-990-81	SHORT CHIP	0		
R524	1-218-990-81	SHORT CHIP	0		
R525	1-218-990-81	SHORT CHIP	0		
R526	1-218-990-81	SHORT CHIP	0		
R528	1-218-953-11	METAL CHIP	1K	5%	1/16W
R529	1-218-953-11	METAL CHIP	1K	5%	1/16W
R530	1-218-953-11	METAL CHIP	1K	5%	1/16W
R531	1-218-953-11	METAL CHIP	1K	5%	1/16W
R532	1-218-953-11	METAL CHIP	1K	5%	1/16W
R533	1-216-789-11	METAL CHIP	2.2	5%	1/10W
R534	1-216-797-11	METAL CHIP	10	5%	1/10W
R701	1-218-941-81	METAL CHIP	100	5%	1/16W
R702	1-218-945-11	METAL CHIP	220	5%	1/16W
R703	1-218-965-11	METAL CHIP	10K	5%	1/16W
R704	1-218-957-11	METAL CHIP	2.2K	5%	1/16W
R705	1-218-977-11	METAL CHIP	100K	5%	1/16W
R706	1-218-990-81	SHORT CHIP	0		
R707	1-218-990-81	SHORT CHIP	0		
R709	1-218-990-81	SHORT CHIP	0		
R710	1-218-990-81	SHORT CHIP	0		
R712	1-218-969-11	METAL CHIP	22K	5%	1/16W
R713	1-218-973-11	METAL CHIP	47K	5%	1/16W
R715	1-216-864-11	SHORT CHIP	0		
R716	1-218-990-81	SHORT CHIP	0		
R717	1-218-945-11	METAL CHIP	220	5%	1/16W
R718	1-218-990-81	SHORT CHIP	0		
R719	1-218-945-11	METAL CHIP	220	5%	1/16W
R721	1-218-969-11	METAL CHIP	22K	5%	1/16W
R722	1-218-990-81	SHORT CHIP	0		
R723	1-218-446-11	METAL CHIP	1	5%	1/10W
R724	1-218-949-11	METAL CHIP	470	5%	1/16W
R726	1-216-864-11	SHORT CHIP	0		
R727	1-218-949-11	METAL CHIP	470	5%	1/16W
R728	1-218-945-11	METAL CHIP	220	5%	1/16W
R731	1-218-949-11	METAL CHIP	470	5%	1/16W
R732	1-218-945-11	METAL CHIP	220	5%	1/16W
R733	1-218-969-11	METAL CHIP	22K	5%	1/16W
R734	1-218-973-11	METAL CHIP	47K	5%	1/16W
R735	1-218-973-11	METAL CHIP	47K	5%	1/16W
R736	1-216-864-11	SHORT CHIP	0		
R737	1-218-941-81	METAL CHIP	100	5%	1/16W
R738	1-218-973-11	METAL CHIP	47K	5%	1/16W

CD | CD KEY | FUNCTION KEY | HEADPHONE

Ref. No.	Part No.	Description			Remark
R740	1-218-941-81	METAL CHIP	100	5%	1/16W
R741	1-218-941-81	METAL CHIP	100	5%	1/16W
R742	1-218-941-81	METAL CHIP	100	5%	1/16W
R743	1-218-961-11	METAL CHIP	4.7K	5%	1/16W
R744	1-218-953-11	METAL CHIP	1K	5%	1/16W
R745	1-218-990-81	SHORT CHIP	0		
R746	1-218-953-11	METAL CHIP	1K	5%	1/16W
R747	1-218-941-81	METAL CHIP	100	5%	1/16W
R748	1-218-941-81	METAL CHIP	100	5%	1/16W
R749	1-218-990-81	SHORT CHIP	0		
R750	1-216-864-11	SHORT CHIP	0		
R751	1-218-949-11	METAL CHIP	470	5%	1/16W
R752	1-218-941-81	METAL CHIP	100	5%	1/16W
R753	1-218-945-11	METAL CHIP	220	5%	1/16W
R754	1-218-953-11	METAL CHIP	1K	5%	1/16W
R755	1-218-990-81	SHORT CHIP	0		
R757	1-216-864-11	SHORT CHIP	0		
R759	1-216-864-11	SHORT CHIP	0		
R760	1-218-990-81	SHORT CHIP	0		
R761	1-216-864-11	SHORT CHIP	0		
R763	1-218-961-11	METAL CHIP	4.7K	5%	1/16W
R764	1-218-941-81	METAL CHIP	100	5%	1/16W
R765	1-218-949-11	METAL CHIP	470	5%	1/16W
R767	1-218-941-81	METAL CHIP	100	5%	1/16W
R768	1-218-941-81	METAL CHIP	100	5%	1/16W
R769	1-218-941-81	METAL CHIP	100	5%	1/16W
R770	1-218-941-81	METAL CHIP	100	5%	1/16W
R771	1-218-941-81	METAL CHIP	100	5%	1/16W
R772	1-218-941-81	METAL CHIP	100	5%	1/16W
R773	1-218-941-81	METAL CHIP	100	5%	1/16W
R774	1-218-977-11	METAL CHIP	100K	5%	1/16W
R775	1-218-977-11	METAL CHIP	100K	5%	1/16W
R776	1-218-977-11	METAL CHIP	100K	5%	1/16W
R777	1-218-941-81	METAL CHIP	100	5%	1/16W
R778	1-218-941-81	METAL CHIP	100	5%	1/16W
R779	1-218-949-11	METAL CHIP	470	5%	1/16W
R780	1-218-941-81	METAL CHIP	100	5%	1/16W
R781	1-218-953-11	METAL CHIP	1K	5%	1/16W
R782	1-218-941-81	METAL CHIP	100	5%	1/16W
R783	1-220-803-81	METAL CHIP	4.7	5%	1/16W
R784	1-218-933-11	METAL CHIP	22	5%	1/16W
R785	1-218-965-11	METAL CHIP	10K	5%	1/16W
R786	1-218-961-11	METAL CHIP	4.7K	5%	1/16W
R787	1-220-803-81	METAL CHIP	4.7	5%	1/16W
R788	1-218-933-11	METAL CHIP	22	5%	1/16W
R789	1-218-965-11	METAL CHIP	10K	5%	1/16W
R790	1-218-961-11	METAL CHIP	4.7K	5%	1/16W
R791	1-218-990-81	SHORT CHIP	0		
R794	1-218-941-81	METAL CHIP	100	5%	1/16W
R795	1-218-941-81	METAL CHIP	100	5%	1/16W
R796	1-218-957-11	METAL CHIP	2.2K	5%	1/16W
R797	1-218-961-11	METAL CHIP	4.7K	5%	1/16W
R798	1-218-990-81	SHORT CHIP	0		
R799	1-218-990-81	SHORT CHIP	0		
		< VIBRATOR >			
X701	1-813-975-21	VIBRATOR, CERAMIC (16.9344MHz)			
X702	1-813-934-11	VIBRATOR, CERAMIC (12MHz)			

****

Ref. No.	Part No.	Description			Remark
		CD KEY BOARD			
		**********			
	3-831-441-99	SHEET (1)			
		< RESISTOR >			
R409	1-216-809-11	METAL CHIP	100	5%	1/10W
R410	1-216-813-11	METAL CHIP	220	5%	1/10W
R411	1-216-817-11	METAL CHIP	470	5%	1/10W
R412	1-216-821-11	METAL CHIP	1K	5%	1/10W
R413	1-216-821-11	METAL CHIP	1K	5%	1/10W
R414	1-216-825-11	METAL CHIP	2.2K	5%	1/10W
R415	1-216-821-11	METAL CHIP	1K	5%	1/10W
R416	1-216-825-11	METAL CHIP	2.2K	5%	1/10W
		< SWITCH >			
S401	1-786-726-11	SWITCH, TACTILE (▶II)			
S402	1-786-726-11	SWITCH, TACTILE (■)			
S405	1-786-726-11	SWITCH, TACTILE (PRESET I◀◀ –)			
S406	1-786-726-11	SWITCH, TACTILE (PRESET ▶▶I +)			
S413	1-786-726-11	SWITCH, TACTILE (TUNE –)			
S414	1-786-726-11	SWITCH, TACTILE (TUNE +)			

****

		FUNCTION KEY BOARD			
		**********			
	3-831-441-99	SHEET (1)			
		< CONNECTOR >			
CNP403	1-815-553-11	PIN, CONNECTOR (PWB) 5P			
CNP404	1-815-550-11	PIN, CONNECTOR (PWB) 2P			
		< RESISTOR >			
R443	1-216-809-11	METAL CHIP	100	5%	1/10W
R444	1-216-813-11	METAL CHIP	220	5%	1/10W
R445	1-216-817-11	METAL CHIP	470	5%	1/10W
R446	1-216-821-11	METAL CHIP	1K	5%	1/10W
R447	1-216-821-11	METAL CHIP	1K	5%	1/10W
R448	1-216-825-11	METAL CHIP	2.2K	5%	1/10W
		< SWITCH >			
S422	1-786-726-11	SWITCH, TACTILE (USB)			
S423	1-786-726-11	SWITCH, TACTILE (CD)			
S424	1-786-726-11	SWITCH, TACTILE (REC CD ► USB)			
S425	1-786-726-11	SWITCH, TACTILE (ENTER)			
S426	1-786-726-11	SWITCH, TACTILE (USB MENU)			

****

	A-1602-059-A	HEADPHONE BOARD, COMPLETE			
		**********			
		< CONNECTOR >			
CNP373	1-815-552-11	PIN, CONNECTOR (PWB) 4P			
		< JACK >			
J391	1-794-016-11	JACK (🎧)			
		< COIL >			
L372	1-410-509-11	INDUCTOR	10uH		

Ref. No.	Part No.	Description			Remark
		< RESISTOR >			
R175	1-216-821-11	METAL CHIP	1K	5%	1/10W
R176	1-216-813-11	METAL CHIP	220	5%	1/10W
R177	1-216-813-11	METAL CHIP	220	5%	1/10W
R180	1-216-864-11	SHORT CHIP	0		
R275	1-216-821-11	METAL CHIP	1K	5%	1/10W
R276	1-216-813-11	METAL CHIP	220	5%	1/10W
R279	1-216-813-11	METAL CHIP	220	5%	1/10W
R280	1-216-864-11	SHORT CHIP	0		

****

	A-1602-060-A	LCD BOARD, COMPLETE			
		**********			
	3-252-827-01	SCREW (B2.6), (+) BV TAPPING			
		< CAPACITOR >			
C601	1-107-826-11	CERAMIC CHIP	0.1uF	10%	16V
C602	1-107-826-11	CERAMIC CHIP	0.1uF	10%	16V
C605	1-162-964-11	CERAMIC CHIP	0.001uF	10%	50V
C610	1-115-156-11	CERAMIC CHIP	1uF		10V
C612	1-126-157-11	ELECT	10uF	20%	16V
C613	1-162-927-11	CERAMIC CHIP	100PF	5%	50V
C614	1-162-970-11	CERAMIC CHIP	0.01uF	10%	25V
		< DIODE >			
D601	6-501-691-21	LED 1L434FV22D0TD501 (LCD BACK LIGHT)			
D602	6-501-691-21	LED 1L434FV22D0TD501 (LCD BACK LIGHT)			
D603	8-719-059-97	LED L-34HD (OPR/BATT)			
D604	6-500-335-01	DIODE MC2838-T112-1			
D605	6-501-728-01	DIODE MAZ8051G0LS0			
		< IC >			
IC601	6-710-490-01	IC LC75827E-E			
IC602	6-600-349-21	IC NJL23H400A (IR)			
		< COIL >			
L601	1-410-509-11	INDUCTOR	10uH		
		< LIQUID CRYSTAL ELEMENT >			
LCD601	1-802-838-11	LIQUID CRYSTAL ELEMENT			
		< RESISTOR >			
R601	1-216-833-11	METAL CHIP	10K	5%	1/10W
R602	1-216-833-11	METAL CHIP	10K	5%	1/10W
R603	1-216-833-11	METAL CHIP	10K	5%	1/10W
R604	1-216-833-11	METAL CHIP	10K	5%	1/10W
R605	1-216-833-11	METAL CHIP	10K	5%	1/10W
R606	1-216-833-11	METAL CHIP	10K	5%	1/10W
R607	1-216-833-11	METAL CHIP	10K	5%	1/10W
R608	1-216-833-11	METAL CHIP	10K	5%	1/10W
R609	1-216-833-11	METAL CHIP	10K	5%	1/10W
R610	1-216-833-11	METAL CHIP	10K	5%	1/10W
R611	1-216-833-11	METAL CHIP	10K	5%	1/10W
R612	1-216-833-11	METAL CHIP	10K	5%	1/10W
R613	1-216-833-11	METAL CHIP	10K	5%	1/10W
R614	1-216-833-11	METAL CHIP	10K	5%	1/10W
R615	1-216-833-11	METAL CHIP	10K	5%	1/10W
R616	1-216-833-11	METAL CHIP	10K	5%	1/10W
R617	1-216-833-11	METAL CHIP	10K	5%	1/10W
R618	1-216-833-11	METAL CHIP	10K	5%	1/10W
R619	1-216-833-11	METAL CHIP	10K	5%	1/10W
R620	1-216-833-11	METAL CHIP	10K	5%	1/10W
R621	1-216-833-11	METAL CHIP	10K	5%	1/10W
R622	1-216-833-11	METAL CHIP	10K	5%	1/10W
R623	1-216-833-11	METAL CHIP	10K	5%	1/10W
R624	1-216-833-11	METAL CHIP	10K	5%	1/10W
R625	1-216-833-11	METAL CHIP	10K	5%	1/10W
R626	1-216-833-11	METAL CHIP	10K	5%	1/10W
R627	1-216-833-11	METAL CHIP	10K	5%	1/10W
R628	1-216-833-11	METAL CHIP	10K	5%	1/10W
R629	1-216-833-11	METAL CHIP	10K	5%	1/10W
R630	1-216-833-11	METAL CHIP	10K	5%	1/10W
R631	1-216-833-11	METAL CHIP	10K	5%	1/10W
R632	1-216-833-11	METAL CHIP	10K	5%	1/10W
R633	1-216-833-11	METAL CHIP	10K	5%	1/10W
R634	1-216-833-11	METAL CHIP	10K	5%	1/10W
R635	1-216-833-11	METAL CHIP	10K	5%	1/10W
R636	1-216-833-11	METAL CHIP	10K	5%	1/10W
R637	1-216-833-11	METAL CHIP	10K	5%	1/10W
R638	1-216-833-11	METAL CHIP	10K	5%	1/10W
R639	1-216-809-11	METAL CHIP	100	5%	1/10W
R640	1-216-829-11	METAL CHIP	4.7K	5%	1/10W
R644	1-216-849-11	METAL CHIP	220K	5%	1/10W
R645	1-216-841-11	METAL CHIP	47K	5%	1/10W
R646	1-216-813-11	METAL CHIP	220	5%	1/10W
R648	1-216-813-11	METAL CHIP	220	5%	1/10W
R649	1-216-813-11	METAL CHIP	220	5%	1/10W
R650	1-216-813-11	METAL CHIP	220	5%	1/10W
R651	1-216-813-11	METAL CHIP	220	5%	1/10W
R652	1-216-813-11	METAL CHIP	220	5%	1/10W
R653	1-216-845-11	METAL CHIP	100K	5%	1/10W
R654	1-216-849-11	METAL CHIP	220K	5%	1/10W
R655	1-216-864-11	SHORT CHIP	0		
R656	1-216-813-11	METAL CHIP	220	5%	1/10W
R657	1-216-813-11	METAL CHIP	220	5%	1/10W
R658	1-216-821-11	METAL CHIP	1K	5%	1/10W
R659	1-216-817-11	METAL CHIP	470	5%	1/10W
R660	1-216-829-11	METAL CHIP	4.7K	5%	1/10W
R661	1-216-821-11	METAL CHIP	1K	5%	1/10W
R662	1-216-821-11	METAL CHIP	1K	5%	1/10W
R663	1-216-821-11	METAL CHIP	1K	5%	1/10W
R664	1-216-821-11	METAL CHIP	1K	5%	1/10W
R665	1-216-813-11	METAL CHIP	220	5%	1/10W
R666	1-216-864-11	SHORT CHIP	0		
R667	1-216-864-11	SHORT CHIP	0		
R668	1-216-864-11	SHORT CHIP	0		
R669	1-216-864-11	SHORT CHIP	0		
R672	1-216-821-11	METAL CHIP	1K	5%	1/10W

****

		LED1 BOARD			
		**********			
		< RESISTOR >			
R401	1-216-813-11	METAL CHIP	220	5%	1/10W
R402	1-216-813-11	METAL CHIP	220	5%	1/10W

****

LED2 LED3 LED4 MAIN

Ref. No.	Part No.	Description			Remark
		LED2 BOARD			
		**********			
		< RESISTOR >			
R403	1-216-813-11	METAL CHIP	220	5%	1/10W
R404	1-216-813-11	METAL CHIP	220	5%	1/10W
**********					
		LED3 BOARD			
		**********			
		< RESISTOR >			
R405	1-216-813-11	METAL CHIP	220	5%	1/10W
R406	1-216-813-11	METAL CHIP	220	5%	1/10W
**********					
		LED4 BOARD			
		**********			
		< RESISTOR >			
R407	1-216-813-11	METAL CHIP	220	5%	1/10W
R408	1-216-813-11	METAL CHIP	220	5%	1/10W
**********					
	A-1602-050-A	MAIN BOARD, COMPLETE (MX)			
	A-1633-759-A	MAIN BOARD, COMPLETE (E41)			
	A-1633-761-A	MAIN BOARD, COMPLETE (CET,E92)			
	A-1633-763-A	MAIN BOARD, COMPLETE (BR)			
		**********			
	1-836-363-31	CABLE, FLEXIBLE FLAT (25 CORE)			
	3-252-827-01	SCREW (B2.6), (+) BV TAPPING			
		< CAPACITOR >			
C101	1-126-961-11	ELECT	2.2uF	20%	50V
C102	1-126-960-11	ELECT	1uF	20%	50V
C104	1-162-927-11	CERAMIC CHIP	100PF	5%	50V
C106	1-162-968-11	CERAMIC CHIP	0.0047uF	10%	50V
C107	1-162-966-11	CERAMIC CHIP	0.0022uF	10%	50V
C108	1-126-961-11	ELECT	2.2uF	20%	50V
C109	1-127-715-11	CERAMIC CHIP	0.22uF	10%	16V
C111	1-127-715-11	CERAMIC CHIP	0.22uF	10%	16V
C113	1-162-927-11	CERAMIC CHIP	100PF	5%	50V
C114	1-126-960-11	ELECT	1uF	20%	50V
C116	1-126-960-11	ELECT	1uF	20%	50V
C118	1-126-947-11	ELECT	47uF	20%	35V
C119	1-162-927-11	CERAMIC CHIP	100PF	5%	50V
C120	1-162-962-11	CERAMIC CHIP	470PF	10%	50V
C121	1-104-658-11	ELECT	100uF	20%	10V
C122	1-126-926-11	ELECT	1000uF	20%	10V
C123	1-164-156-11	CERAMIC CHIP	0.1uF		25V
C124	1-164-156-11	CERAMIC CHIP	0.1uF		25V
C151	1-126-963-11	ELECT	4.7uF	20%	50V
C152	1-107-826-11	CERAMIC CHIP	0.1uF	10%	16V
C153	1-127-715-11	CERAMIC CHIP	0.22uF	10%	16V
C154	1-115-156-11	CERAMIC CHIP	1uF		10V
C156	1-126-963-11	ELECT	4.7uF	20%	50V
C157	1-126-960-11	ELECT	1uF	20%	50V
C160	1-126-961-11	ELECT	2.2uF	20%	50V
C201	1-126-961-11	ELECT	2.2uF	20%	50V
C202	1-126-960-11	ELECT	1uF	20%	50V
C204	1-162-927-11	CERAMIC CHIP	100PF	5%	50V
C206	1-162-968-11	CERAMIC CHIP	0.0047uF	10%	50V

Ref. No.	Part No.	Description			Remark
C207	1-162-966-11	CERAMIC CHIP	0.0022uF	10%	50V
C208	1-126-961-11	ELECT	2.2uF	20%	50V
C209	1-127-715-11	CERAMIC CHIP	0.22uF	10%	16V
C211	1-127-715-11	CERAMIC CHIP	0.22uF	10%	16V
C213	1-162-927-11	CERAMIC CHIP	100PF	5%	50V
C214	1-126-960-11	ELECT	1uF	20%	50V
C216	1-126-960-11	ELECT	1uF	20%	50V
C218	1-126-947-11	ELECT	47uF	20%	35V
C219	1-162-927-11	CERAMIC CHIP	100PF	5%	50V
C220	1-162-962-11	CERAMIC CHIP	470PF	10%	50V
C221	1-104-658-11	ELECT	100uF	20%	10V
C222	1-126-926-11	ELECT	1000uF	20%	10V
C223	1-164-156-11	CERAMIC CHIP	0.1uF		25V
C224	1-164-156-11	CERAMIC CHIP	0.1uF		25V
C251	1-126-963-11	ELECT	4.7uF	20%	50V
C252	1-107-826-11	CERAMIC CHIP	0.1uF	10%	16V
C253	1-127-715-11	CERAMIC CHIP	0.22uF	10%	16V
C254	1-115-156-11	CERAMIC CHIP	1uF		10V
C256	1-126-963-11	ELECT	4.7uF	20%	50V
C257	1-126-960-11	ELECT	1uF	20%	50V
C260	1-126-961-11	ELECT	2.2uF	20%	50V
C301	1-126-935-11	ELECT	470uF	20%	16V
C302	1-115-156-11	CERAMIC CHIP	1uF		10V
C305	1-126-964-11	ELECT	10uF	20%	50V
C306	1-107-826-11	CERAMIC CHIP	0.1uF	10%	16V
C307	1-126-960-11	ELECT	1uF	20%	50V
C308	1-104-658-11	ELECT	100uF	20%	10V
C309	1-164-227-11	CERAMIC CHIP	0.022uF	10%	25V
C310	1-165-176-11	CERAMIC CHIP	0.047uF	10%	16V
C311	1-162-927-11	CERAMIC CHIP	100PF	5%	50V
C312	1-164-227-11	CERAMIC CHIP	0.022uF	10%	25V
C313	1-162-970-11	CERAMIC CHIP	0.01uF	10%	25V
C314	1-104-658-11	ELECT	100uF	20%	10V
C315	1-126-964-11	ELECT	10uF	20%	50V
C316	1-126-923-11	ELECT	220uF	20%	10V
C317	1-104-662-11	ELECT	22uF	20%	25V
C318	1-162-927-11	CERAMIC CHIP	100PF	5%	50V
C319	1-104-658-11	ELECT	100uF	20%	10V
C320	1-107-826-11	CERAMIC CHIP	0.1uF	10%	16V
C321	1-104-658-11	ELECT	100uF	20%	10V
C322	1-104-658-11	ELECT	100uF	20%	10V
C323	1-104-658-11	ELECT	100uF	20%	10V
C324	1-127-715-11	CERAMIC CHIP	0.22uF	10%	16V
C325	1-127-715-11	CERAMIC CHIP	0.22uF	10%	16V
C326	1-162-970-11	CERAMIC CHIP	0.01uF	10%	25V
C327	1-104-658-11	ELECT	100uF	20%	10V
C328	1-127-715-11	CERAMIC CHIP	0.22uF	10%	16V
C329	1-127-715-11	CERAMIC CHIP	0.22uF	10%	16V
C330	1-104-662-11	ELECT	22uF	20%	25V
C331	1-126-961-11	ELECT	2.2uF	20%	50V
C332	1-135-834-11	CERAMIC CHIP	2.2uF		6.3V
C334	1-104-658-11	ELECT	100uF	20%	10V
C335	1-126-942-61	ELECT	1000uF	20%	25V
C351	1-126-960-11	ELECT	1uF	20%	50V
C352	1-107-826-11	CERAMIC CHIP	0.1uF	10%	16V
C353	1-126-960-11	ELECT	1uF	20%	50V
C355	1-115-156-11	CERAMIC CHIP	1uF		10V
C501	1-162-927-11	CERAMIC CHIP	100PF	5%	50V
C502	1-162-927-11	CERAMIC CHIP	100PF	5%	50V
C525	1-162-970-11	CERAMIC CHIP	0.01uF	10%	25V

Ref. No.	Part No.	Description			Remark
C527	1-162-970-11	CERAMIC CHIP	0.01uF	10%	25V
C539	1-162-970-11	CERAMIC CHIP	0.01uF	10%	25V
C540	1-135-834-11	CERAMIC CHIP	2.2uF		6.3V
C548	1-162-927-11	CERAMIC CHIP	100PF	5%	50V
C549	1-162-927-11	CERAMIC CHIP	100PF	5%	50V
C550	1-162-927-11	CERAMIC CHIP	100PF	5%	50V
C551	1-162-927-11	CERAMIC CHIP	100PF	5%	50V
C552	1-162-964-11	CERAMIC CHIP	0.001uF	10%	50V
C555	1-135-834-11	CERAMIC CHIP	2.2uF		6.3V
C801	1-162-927-11	CERAMIC CHIP	100PF	5%	50V
C802	1-162-927-11	CERAMIC CHIP	100PF	5%	50V
C803	1-162-927-11	CERAMIC CHIP	100PF	5%	50V
C804	1-162-927-11	CERAMIC CHIP	100PF	5%	50V
C805	1-164-230-11	CERAMIC CHIP	220PF	5%	50V
C806	1-162-962-11	CERAMIC CHIP	470PF	10%	50V
C807	1-162-923-11	CERAMIC CHIP	47PF	5%	50V
C808	1-107-826-11	CERAMIC CHIP	0.1uF	10%	16V
C812	1-104-658-11	ELECT	100uF	20%	10V
C813	1-107-826-11	CERAMIC CHIP	0.1uF	10%	16V
C814	1-162-927-11	CERAMIC CHIP	100PF	5%	50V
C815	1-162-927-11	CERAMIC CHIP	100PF	5%	50V
C816	1-162-970-11	CERAMIC CHIP	0.01uF	10%	25V
C817	1-162-970-11	CERAMIC CHIP	0.01uF	10%	25V
C818	1-162-970-11	CERAMIC CHIP	0.01uF	10%	25V
C819	1-162-970-11	CERAMIC CHIP	0.01uF	10%	25V
C820	1-162-970-11	CERAMIC CHIP	0.01uF	10%	25V
C821	1-162-927-11	CERAMIC CHIP	100PF	5%	50V
C822	1-107-826-11	CERAMIC CHIP	0.1uF	10%	16V
C823	1-162-970-11	CERAMIC CHIP	0.01uF	10%	25V
C824	1-162-915-11	CERAMIC CHIP	10PF	0.5PF	50V
C825	1-162-919-11	CERAMIC CHIP	22PF	5%	50V
C826	1-162-915-11	CERAMIC CHIP	10PF	0.5PF	50V
C827	1-162-910-11	CERAMIC CHIP	5PF	0.25PF	50V
C828	1-162-919-11	CERAMIC CHIP	22PF	5%	50V
C829	1-162-913-11	CERAMIC CHIP	8PF	0.5PF	50V
C830	1-162-923-11	CERAMIC CHIP	47PF	5%	50V
C831	1-162-919-11	CERAMIC CHIP	22PF	5%	50V
C832	1-162-970-11	CERAMIC CHIP	0.01uF	10%	25V
C833	1-115-156-11	CERAMIC CHIP	1uF		10V
C834	1-104-658-11	ELECT	100uF	20%	10V
C835	1-162-970-11	CERAMIC CHIP	0.01uF	10%	25V
C836	1-104-658-11	ELECT	100uF	20%	10V
C837	1-162-970-11	CERAMIC CHIP	0.01uF	10%	25V
C838	1-104-658-11	ELECT	100uF	20%	10V
C839	1-162-970-11	CERAMIC CHIP	0.01uF	10%	25V
C840	1-107-826-11	CERAMIC CHIP	0.1uF	10%	16V
C841	1-162-970-11	CERAMIC CHIP	0.01uF	10%	25V
C842	1-164-156-11	CERAMIC CHIP	0.1uF		25V
C844	1-162-960-11	CERAMIC CHIP	220PF	10%	50V
C845	1-164-230-11	CERAMIC CHIP	220PF	5%	50V
C846	1-162-964-11	CERAMIC CHIP	0.001uF	10%	50V
C847	1-162-968-11	CERAMIC CHIP	0.0047uF	10%	50V
C848	1-162-927-11	CERAMIC CHIP	100PF	5%	50V
C849	1-162-964-11	CERAMIC CHIP	0.001uF	10%	50V
C861	1-107-826-11	CERAMIC CHIP	0.1uF	10%	16V
C862	1-135-834-11	CERAMIC CHIP	2.2uF		6.3V
C869	1-162-927-11	CERAMIC CHIP	100PF	5%	50V
C870	1-162-927-11	CERAMIC CHIP	100PF	5%	50V
C878	1-107-826-11	CERAMIC CHIP	0.1uF	10%	16V
C880	1-107-826-11	CERAMIC CHIP	0.1uF	10%	16V

Ref. No.	Part No.	Description			Remark
C881	1-162-966-11	CERAMIC CHIP	0.0022uF	10%	50V
C882	1-162-966-11	CERAMIC CHIP	0.0022uF	10%	50V
C883	1-162-970-11	CERAMIC CHIP	0.01uF	10%	25V
C884	1-162-923-11	CERAMIC CHIP	47PF	5%	50V
C886	1-162-970-11	CERAMIC CHIP	0.01uF	10%	25V
C887	1-162-970-11	CERAMIC CHIP	0.01uF	10%	25V
C888	1-162-970-11	CERAMIC CHIP	0.01uF	10%	25V
C889	1-162-927-11	CERAMIC CHIP	100PF	5%	50V
C901	1-126-964-11	ELECT	10uF	20%	50V
C902	1-164-156-11	CERAMIC CHIP	0.1uF		25V
C903	1-100-591-11	CERAMIC CHIP	1uF	10%	25V
C904	1-126-946-11	ELECT	6800uF	20%	25V
C905	1-126-964-11	ELECT	10uF	20%	50V
C906	1-164-227-11	CERAMIC CHIP	0.022uF	10%	25V
C907	1-126-934-11	ELECT	220uF	20%	16V
C908	1-126-923-11	ELECT	220uF	20%	10V
C909	1-164-227-11	CERAMIC CHIP	0.022uF	10%	25V
C910	1-126-923-11	ELECT	220uF	20%	10V
C911	1-104-666-11	ELECT	220uF	20%	25V
C912	1-104-666-11	ELECT	220uF	20%	25V
C913	1-164-156-11	CERAMIC CHIP	0.1uF		25V
C914	1-107-826-11	CERAMIC CHIP	0.1uF	10%	16V
C915	1-126-941-11	ELECT	470uF	20%	25V
C918	1-164-227-11	CERAMIC CHIP	0.022uF	10%	25V
C919	1-126-964-11	ELECT	10uF	20%	50V
C920	1-126-923-11	ELECT	220uF	20%	10V
C922	1-162-927-11	CERAMIC CHIP	100PF	5%	50V
C952	1-126-964-11	ELECT	10uF	20%	50V
C953	1-162-995-11	CERAMIC CHIP	0.022uF		50V
		< CONNECTOR >			
CN1	1-836-362-31	CABLE, FLEXIBLE FLAT (13 CORE)			
CN2	1-832-425-31	CABLE, FLEXIBLE FLAT (11 CORE)			
CN801	1-779-293-11	CONNECTOR, FFC (LIF(NON-ZIF)) 25P			
CN802	1-815-554-11	PIN, CONNECTOR (PWB) 6P			
CN803	1-815-554-21	PIN, CONNECTOR (PWB) 6P			
CN804	1-815-555-21	PIN, CONNECTOR (PWB) 7P			
CN805	1-815-553-11	PIN, CONNECTOR (PWB) 5P			
* CN808	1-815-555-11	PIN, CONNECTOR (PWB) 7P			
CN809	1-815-550-11	PIN, CONNECTOR (PWB) 2P			
CN810	1-815-550-21	PIN, CONNECTOR (PWB) 2P			
CN811	1-815-443-11	PIN, CONNECTOR (PWB) 2P			
CNP303	1-815-554-11	PIN, CONNECTOR (PWB) 6P			
CNP391	1-815-553-11	PIN, CONNECTOR (PWB) 5P			
CNP392	1-815-551-11	PIN, CONNECTOR (PWB) 3P			
CNP393	1-815-552-11	PIN, CONNECTOR (PWB) 4P			
CNP901	1-815-553-21	PIN, CONNECTOR (PWB) 5P			
		< DIODE >			
D151	8-719-058-24	DIODE RB501V-40TE-17			
D251	8-719-058-24	DIODE RB501V-40TE-17			
D303	6-500-335-01	DIODE MC2838-T112-1			
D304	6-500-335-01	DIODE MC2838-T112-1			
D305	6-501-817-01	DIODE MA2J1110GLS0			
D306	6-501-817-01	DIODE MA2J1110GLS0			
D307	6-501-817-01	DIODE MA2J1110GLS0			
D308	6-501-817-01	DIODE MA2J1110GLS0			
D309	8-719-991-33	DIODE 1SS133T-77			
D310	8-719-991-33	DIODE 1SS133T-77			
D311	8-719-991-33	DIODE 1SS133T-77			

MAIN

Ref. No.	Part No.	Description	Remark
D312	8-719-991-33	DIODE 1SS133T-77	
D804	6-501-817-01	DIODE MA2J1110GLS0	
D806	8-719-991-33	DIODE 1SS133T-77	
D807	8-719-991-33	DIODE 1SS133T-77	
D808	8-719-991-33	DIODE 1SS133T-77	
D809	8-719-991-33	DIODE 1SS133T-77	
D810	8-719-991-33	DIODE 1SS133T-77	
D811	8-719-991-33	DIODE 1SS133T-77	
D814	8-719-991-33	DIODE 1SS133T-77	
D815	8-719-991-33	DIODE 1SS133T-77	
D902	6-500-334-01	DIODE MC2836-T112-1	
D903	6-500-334-01	DIODE MC2836-T112-1	
D904	6-501-758-01	DIODE MAZ8100G0LS0	
D905	6-501-740-01	DIODE MAZ8068G0LS0	
D906	8-719-085-36	DIODE 11EQS04-TB5	
D907	6-501-717-01	DIODE MAZ8039G0LS0	
D909	6-501-817-01	DIODE MA2J1110GLS0	
		< FERRITE BEAD >	
FB802	1-414-445-11	FERRITE, EMI (SMD) (1608)	
FB803	1-414-445-11	FERRITE, EMI (SMD) (1608)	
FB804	1-216-864-11	SHORT CHIP 0	
FB805	1-216-864-11	SHORT CHIP 0	
FB806	1-469-670-21	FERRITE, EMI (SMD) (2012)	
FB807	1-469-670-21	FERRITE, EMI (SMD) (2012)	
FB901	1-216-295-11	SHORT CHIP 0	
FB902	1-216-295-11	SHORT CHIP 0	
		< IC >	
IC301	6-712-055-01	IC BD3499FV-E2	
IC302	8-759-426-51	IC BA5417	
IC303	8-759-426-51	IC BA5417	
IC351	6-702-945-01	IC NJM14558V-TE2	
IC801	(Not supplied)	IC LC87F7DC8AU-QIP-E	
IC802	6-710-820-01	IC S-24CS02AFJ-TB-G	
IC803	6-709-458-01	IC XC61CN2802NR	
IC804	6-706-338-01	IC XC6202P332FR	
IC901	6-702-472-01	IC PQ1CZ21H2ZPH	
		< JUMPER RESISTOR >	
JC302	1-216-295-11	SHORT CHIP 0	
JC303	1-216-864-11	SHORT CHIP 0	
JC802	1-216-864-11	SHORT CHIP 0	
JC805	1-216-864-11	SHORT CHIP 0	
JC806	1-216-864-11	SHORT CHIP 0	
JC808	1-216-864-11	SHORT CHIP 0	
JC809	1-216-864-11	SHORT CHIP 0	
JC811	1-216-864-11	SHORT CHIP 0	
JC812	1-216-864-11	SHORT CHIP 0	
		< COIL >	
L802	1-216-295-11	SHORT CHIP 0	
L803	1-410-517-11	INDUCTOR 47uH	
L813	1-414-142-61	INDUCTOR 1uH	
L814	1-410-501-11	INDUCTOR 2.2uH	
L901	1-481-245-11	COIL, CHOKE 220uH	
L902	1-456-756-11	COIL, CHOKE 100uH	
		< TRANSISTOR >	
Q101	8-729-620-07	TRANSISTOR 2SC3052EF-T1-LEF	
Q160	8-729-620-07	TRANSISTOR 2SC3052EF-T1-LEF	
Q201	8-729-620-07	TRANSISTOR 2SC3052EF-T1-LEF	
Q260	8-729-620-07	TRANSISTOR 2SC3052EF-T1-LEF	
Q301	8-729-620-07	TRANSISTOR 2SC3052EF-T1-LEF	
Q302	8-729-045-62	FET 2SK2158-T2B	
Q303	8-729-620-07	TRANSISTOR 2SC3052EF-T1-LEF	
Q304	8-729-036-89	TRANSISTOR KTC3198GR-AT	
Q305	6-551-443-01	TRANSISTOR RT1P436C-TP-1	
Q306	8-729-036-86	TRANSISTOR KTC3203Y-AT	
Q801	6-551-696-01	TRANSISTOR ISA1235AC1TP-1EF	
Q802	8-729-620-07	TRANSISTOR 2SC3052EF-T1-LEF	
Q803	8-729-620-07	TRANSISTOR 2SC3052EF-T1-LEF	
Q804	6-551-067-01	FET RTF015P02TL	
Q805	8-729-620-07	TRANSISTOR 2SC3052EF-T1-LEF	
Q806	8-729-027-26	TRANSISTOR DTA114YKA-T146	
Q807	8-729-027-46	TRANSISTOR DTC114YKA-T146	
Q808	8-729-620-07	TRANSISTOR 2SC3052EF-T1-LEF	
Q809	8-729-027-46	TRANSISTOR DTC114YKA-T146	
Q810	8-729-027-26	TRANSISTOR DTA114YKA-T146	
Q811	8-729-027-46	TRANSISTOR DTC114YKA-T146	
Q812	8-729-027-26	TRANSISTOR DTA114YKA-T146	
Q813	8-729-037-13	TRANSISTOR KTA1271Y	
Q814	8-729-027-46	TRANSISTOR DTC114YKA-T146	
Q815	8-729-037-13	TRANSISTOR KTA1271Y	
Q816	8-729-027-46	TRANSISTOR DTC114YKA-T146	
Q817	8-729-027-26	TRANSISTOR DTA114YKA-T146	
Q818	8-729-027-46	TRANSISTOR DTC114YKA-T146	
Q819	8-729-027-26	TRANSISTOR DTA114YKA-T146	
Q820	8-729-027-46	TRANSISTOR DTC114YKA-T146	
Q821	8-729-027-26	TRANSISTOR DTA114YKA-T146	
Q822	8-729-027-46	TRANSISTOR DTC114YKA-T146	
Q823	8-729-027-26	TRANSISTOR DTA114YKA-T146	
Q824	8-729-027-46	TRANSISTOR DTC114YKA-T146	
Q825	8-729-027-26	TRANSISTOR DTA114YKA-T146	
Q826	8-729-027-46	TRANSISTOR DTC114YKA-T146	
Q827	8-729-027-26	TRANSISTOR DTA114YKA-T146	
Q828	8-729-027-46	TRANSISTOR DTC114YKA-T146	
Q829	8-729-027-26	TRANSISTOR DTA114YKA-T146	
Q830	8-729-027-46	TRANSISTOR DTC114YKA-T146	
Q831	8-729-027-26	TRANSISTOR DTA114YKA-T146	
Q832	8-729-027-46	TRANSISTOR DTC114YKA-T146	
Q833	8-729-027-46	TRANSISTOR DTC114YKA-T146	
Q901	8-729-027-50	TRANSISTOR DTC123JKA-T146	
Q903	6-551-276-01	TRANSISTOR RT1N431C-TP-1	
Q904	6-551-696-01	TRANSISTOR ISA1235AC1TP-1EF	
Q905	8-729-037-08	TRANSISTOR KTD2058Y	
Q906	8-729-037-08	TRANSISTOR KTD2058Y	
Q907	8-729-036-86	TRANSISTOR KTC3203Y-AT	
Q912	8-729-037-08	TRANSISTOR KTD2058Y	
		< RESISTOR >	
R104	1-216-833-11	METAL CHIP 10K 5% 1/10W	
R105	1-216-829-11	METAL CHIP 4.7K 5% 1/10W	
R108	1-216-864-11	SHORT CHIP 0	
R109	1-216-833-11	METAL CHIP 10K 5% 1/10W	
R110	1-216-833-11	METAL CHIP 10K 5% 1/10W	
R111	1-216-864-11	SHORT CHIP 0	
R112	1-216-829-11	METAL CHIP 4.7K 5% 1/10W	
R114	1-216-833-11	METAL CHIP 10K 5% 1/10W	
R115	1-216-829-11	METAL CHIP 4.7K 5% 1/10W	
R117	1-216-833-11	METAL CHIP 10K 5% 1/10W	

Ref. No.	Part No.	Description			Remark
R118	1-216-825-11	METAL CHIP	2.2K	5%	1/10W
R119	1-216-864-11	SHORT CHIP	0		
R120	1-216-813-11	METAL CHIP	220	5%	1/10W
R121	1-216-817-11	METAL CHIP	470	5%	1/10W
R122	1-216-793-11	METAL CHIP	4.7	5%	1/10W
R123	1-216-837-11	METAL CHIP	22K	5%	1/10W
R124	1-216-837-11	METAL CHIP	22K	5%	1/10W
R125	1-216-821-11	METAL CHIP	1K	5%	1/10W
R151	1-216-845-11	METAL CHIP	100K	5%	1/10W
R152	1-216-825-11	METAL CHIP	2.2K	5%	1/10W
R153	1-216-817-11	METAL CHIP	470	5%	1/10W
R154	1-216-845-11	METAL CHIP	100K	5%	1/10W
R155	1-216-864-11	SHORT CHIP	0		
R156	1-216-833-11	METAL CHIP	10K	5%	1/10W
R157	1-216-845-11	METAL CHIP	100K	5%	1/10W
R158	1-216-864-11	SHORT CHIP	0		
R159	1-216-821-11	METAL CHIP	1K	5%	1/10W
R160	1-216-845-11	METAL CHIP	100K	5%	1/10W
R161	1-216-841-11	METAL CHIP	47K	5%	1/10W
R162	1-216-825-11	METAL CHIP	2.2K	5%	1/10W
R163	1-216-821-11	METAL CHIP	1K	5%	1/10W
R174	1-216-864-11	SHORT CHIP	0		
R204	1-216-833-11	METAL CHIP	10K	5%	1/10W
R205	1-216-829-11	METAL CHIP	4.7K	5%	1/10W
R208	1-216-864-11	SHORT CHIP	0		
R209	1-216-833-11	METAL CHIP	10K	5%	1/10W
R210	1-216-833-11	METAL CHIP	10K	5%	1/10W
R211	1-216-864-11	SHORT CHIP	0		
R212	1-216-829-11	METAL CHIP	4.7K	5%	1/10W
R214	1-216-833-11	METAL CHIP	10K	5%	1/10W
R215	1-216-829-11	METAL CHIP	4.7K	5%	1/10W
R217	1-216-833-11	METAL CHIP	10K	5%	1/10W
R218	1-216-825-11	METAL CHIP	2.2K	5%	1/10W
R219	1-216-864-11	SHORT CHIP	0		
R220	1-216-813-11	METAL CHIP	220	5%	1/10W
R221	1-216-817-11	METAL CHIP	470	5%	1/10W
R222	1-216-793-11	METAL CHIP	4.7	5%	1/10W
R223	1-216-837-11	METAL CHIP	22K	5%	1/10W
R224	1-216-837-11	METAL CHIP	22K	5%	1/10W
R225	1-216-821-11	METAL CHIP	1K	5%	1/10W
R251	1-216-845-11	METAL CHIP	100K	5%	1/10W
R252	1-216-825-11	METAL CHIP	2.2K	5%	1/10W
R253	1-216-817-11	METAL CHIP	470	5%	1/10W
R254	1-216-845-11	METAL CHIP	100K	5%	1/10W
R255	1-216-864-11	SHORT CHIP	0		
R256	1-216-833-11	METAL CHIP	10K	5%	1/10W
R257	1-216-845-11	METAL CHIP	100K	5%	1/10W
R258	1-216-864-11	SHORT CHIP	0		
R259	1-216-821-11	METAL CHIP	1K	5%	1/10W
R260	1-216-845-11	METAL CHIP	100K	5%	1/10W
R261	1-216-841-11	METAL CHIP	47K	5%	1/10W
R262	1-216-825-11	METAL CHIP	2.2K	5%	1/10W
R263	1-216-821-11	METAL CHIP	1K	5%	1/10W
R274	1-216-864-11	SHORT CHIP	0		
R302	1-216-864-11	SHORT CHIP	0		
R303	1-216-829-11	METAL CHIP	4.7K	5%	1/10W
R304	1-216-829-11	METAL CHIP	4.7K	5%	1/10W
R305	1-216-853-11	METAL CHIP	470K	5%	1/10W
R306	1-216-825-11	METAL CHIP	2.2K	5%	1/10W
R307	1-216-817-11	METAL CHIP	470	5%	1/10W

Ref. No.	Part No.	Description			Remark
R308	1-216-825-11	METAL CHIP	2.2K	5%	1/10W
R309	1-216-817-11	METAL CHIP	470	5%	1/10W
R310	1-216-853-11	METAL CHIP	470K	5%	1/10W
R311	1-216-837-11	METAL CHIP	22K	5%	1/10W
R312	1-216-829-11	METAL CHIP	4.7K	5%	1/10W
R313	1-216-833-11	METAL CHIP	10K	5%	1/10W
R314	1-216-837-11	METAL CHIP	22K	5%	1/10W
R315	1-216-833-11	METAL CHIP	10K	5%	1/10W
R316	1-216-837-11	METAL CHIP	22K	5%	1/10W
R317	1-216-825-11	METAL CHIP	2.2K	5%	1/10W
R318	1-216-821-11	METAL CHIP	1K	5%	1/10W
R319	1-216-821-11	METAL CHIP	1K	5%	1/10W
R320	1-216-821-11	METAL CHIP	1K	5%	1/10W
R321	1-216-825-11	METAL CHIP	2.2K	5%	1/10W
R322	1-216-829-11	METAL CHIP	4.7K	5%	1/10W
R323	1-216-821-11	METAL CHIP	1K	5%	1/10W
R324	1-216-829-11	METAL CHIP	4.7K	5%	1/10W
R325	1-216-864-11	SHORT CHIP	0		
R326	1-216-817-11	METAL CHIP	470	5%	1/10W
R327	1-216-821-11	METAL CHIP	1K	5%	1/10W
R328	1-216-833-11	METAL CHIP	10K	5%	1/10W
R331	1-216-864-11	SHORT CHIP	0		
R333	1-216-797-11	METAL CHIP	10	5%	1/10W
R334	1-216-797-11	METAL CHIP	10	5%	1/10W
R335	1-216-825-11	METAL CHIP	2.2K	5%	1/10W
R336	1-216-857-11	METAL CHIP	1M	5%	1/10W
R337	1-216-857-11	METAL CHIP	1M	5%	1/10W
R338	1-216-817-11	METAL CHIP	470	5%	1/10W
R339	1-216-817-11	METAL CHIP	470	5%	1/10W
R340	1-216-821-11	METAL CHIP	1K	5%	1/10W
R341	1-216-829-11	METAL CHIP	4.7K	5%	1/10W
R342	1-216-821-11	METAL CHIP	1K	5%	1/10W
R343	1-216-833-11	METAL CHIP	10K	5%	1/10W
R344	1-216-837-11	METAL CHIP	22K	5%	1/10W
R345	1-216-821-11	METAL CHIP	1K	5%	1/10W
R351	1-216-833-11	METAL CHIP	10K	5%	1/10W
R352	1-216-833-11	METAL CHIP	10K	5%	1/10W
R353	1-216-857-11	METAL CHIP	1M	5%	1/10W
R501	1-216-833-11	METAL CHIP	10K	5%	1/10W
R502	1-216-864-11	SHORT CHIP	0		
R503	1-216-821-11	METAL CHIP	1K	5%	1/10W
R504	1-216-864-11	SHORT CHIP	0		
R505	1-216-864-11	SHORT CHIP	0		
R506	1-216-837-11	METAL CHIP	22K	5%	1/10W
R507	1-216-833-11	METAL CHIP	10K	5%	1/10W
R508	1-216-821-11	METAL CHIP	1K	5%	1/10W
R509	1-216-821-11	METAL CHIP	1K	5%	1/10W
R510	1-216-845-11	METAL CHIP	100K	5%	1/10W
R511	1-216-845-11	METAL CHIP	100K	5%	1/10W
R512	1-216-841-11	METAL CHIP	47K	5%	1/10W
R513	1-216-864-11	SHORT CHIP	0		
R514	1-216-821-11	METAL CHIP	1K	5%	1/10W
R515	1-216-821-11	METAL CHIP	1K	5%	1/10W
R516	1-216-821-11	METAL CHIP	1K	5%	1/10W
R517	1-216-817-11	METAL CHIP	470	5%	1/10W
R518	1-216-845-11	METAL CHIP	100K	5%	1/10W
R521	1-216-841-11	METAL CHIP	47K	5%	1/10W
R522	1-216-841-11	METAL CHIP	47K	5%	1/10W
R523	1-216-845-11	METAL CHIP	100K	5%	1/10W
R524	1-216-845-11	METAL CHIP	100K	5%	1/10W

MAIN

Ref. No.	Part No.	Description			Remark
R525	1-216-845-11	METAL CHIP	100K	5%	1/10W
R526	1-216-829-11	METAL CHIP	4.7K	5%	1/10W
R527	1-216-841-11	METAL CHIP	47K	5%	1/10W
R528	1-216-821-11	METAL CHIP	1K	5%	1/10W
R529	1-216-841-11	METAL CHIP	47K	5%	1/10W
R530	1-216-825-11	METAL CHIP	2.2K	5%	1/10W
R531	1-216-841-11	METAL CHIP	47K	5%	1/10W
R532	1-216-825-11	METAL CHIP	2.2K	5%	1/10W
R533	1-216-864-11	SHORT CHIP	0		
R540	1-216-864-11	SHORT CHIP	0		
R552	1-216-821-11	METAL CHIP	1K	5%	1/10W
R554	1-216-864-11	SHORT CHIP	0		
R556	1-216-813-11	METAL CHIP	220	5%	1/10W
R558	1-216-864-11	SHORT CHIP	0		
R559	1-216-813-11	METAL CHIP	220	5%	1/10W
R560	1-216-813-11	METAL CHIP	220	5%	1/10W
R562	1-216-864-11	SHORT CHIP	0		
R563	1-216-821-11	METAL CHIP	1K	5%	1/10W
R564	1-216-864-11	SHORT CHIP	0		
R565	1-216-864-11	SHORT CHIP	0		
R566	1-216-864-11	SHORT CHIP	0		
R567	1-216-864-11	SHORT CHIP	0		
R568	1-216-864-11	SHORT CHIP	0		
R569	1-216-864-11	SHORT CHIP	0		
R570	1-216-864-11	SHORT CHIP	0		
R571	1-216-864-11	SHORT CHIP	0		
R572	1-216-864-11	SHORT CHIP	0		
R573	1-216-864-11	SHORT CHIP	0		
R574	1-216-864-11	SHORT CHIP	0		
R575	1-216-864-11	SHORT CHIP	0		
R576	1-216-864-11	SHORT CHIP	0		
R577	1-216-864-11	SHORT CHIP	0		
R578	1-216-821-11	METAL CHIP	1K	5%	1/10W
R579	1-216-821-11	METAL CHIP	1K	5%	1/10W
R580	1-216-864-11	SHORT CHIP	0		
R581	1-216-864-11	SHORT CHIP	0		
R582	1-216-864-11	SHORT CHIP	0		
R583	1-216-864-11	SHORT CHIP	0		
R584	1-216-864-11	SHORT CHIP	0		
R585	1-216-864-11	SHORT CHIP	0		
R586	1-216-864-11	SHORT CHIP	0		
R587	1-216-864-11	SHORT CHIP	0		
R588	1-216-821-11	METAL CHIP	1K	5%	1/10W
R589	1-216-864-11	SHORT CHIP	0		
R590	1-216-864-11	SHORT CHIP	0		
R801	1-216-821-11	METAL CHIP	1K	5%	1/10W
R802	1-216-821-11	METAL CHIP	1K	5%	1/10W
R803	1-216-809-11	METAL CHIP	100	5%	1/10W
R804	1-216-825-11	METAL CHIP	2.2K	5%	1/10W
R805	1-216-813-11	METAL CHIP	220	5%	1/10W
R806	1-216-813-11	METAL CHIP	220	5%	1/10W
R807	1-216-817-11	METAL CHIP	470	5%	1/10W
R808	1-216-864-11	SHORT CHIP	0		
R809	1-216-821-11	METAL CHIP	1K	5%	1/10W
R810	1-216-821-11	METAL CHIP	1K	5%	1/10W
R811	1-216-813-11	METAL CHIP	220	5%	1/10W
R812	1-216-813-11	METAL CHIP	220	5%	1/10W
R813	1-216-833-11	METAL CHIP	10K	5%	1/10W
R814	1-216-833-11	METAL CHIP	10K	5%	1/10W
R815	1-216-833-11	METAL CHIP	10K	5%	1/10W

Ref. No.	Part No.	Description			Remark
R816	1-216-833-11	METAL CHIP	10K	5%	1/10W
R817	1-216-833-11	METAL CHIP	10K	5%	1/10W
R818	1-216-833-11	METAL CHIP	10K	5%	1/10W
R819	1-216-821-11	METAL CHIP	1K	5%	1/10W
R820	1-216-821-11	METAL CHIP	1K	5%	1/10W
R821	1-216-821-11	METAL CHIP	1K	5%	1/10W
R822	1-216-821-11	METAL CHIP	1K	5%	1/10W
R823	1-216-821-11	METAL CHIP	1K	5%	1/10W
R824	1-216-821-11	METAL CHIP	1K	5%	1/10W
R825	1-216-821-11	METAL CHIP	1K	5%	1/10W
R826	1-216-821-11	METAL CHIP	1K	5%	1/10W
R827	1-216-841-11	METAL CHIP	47K	5%	1/10W
R828	1-216-841-11	METAL CHIP	47K	5%	1/10W
R829	1-216-829-11	METAL CHIP	4.7K	5%	1/10W
R830	1-216-829-11	METAL CHIP	4.7K	5%	1/10W
R831	1-216-829-11	METAL CHIP	4.7K	5%	1/10W
R832	1-216-829-11	METAL CHIP	4.7K	5%	1/10W
R833	1-216-829-11	METAL CHIP	4.7K	5%	1/10W
R834	1-216-853-11	METAL CHIP	470K	5%	1/10W
R835	1-216-845-11	METAL CHIP	100K	5%	1/10W (CET,E92,BR)
R836	1-216-864-11	SHORT CHIP	0 (E41,MX)		
R837	1-216-841-11	METAL CHIP	47K	5%	1/10W
R838	1-216-841-11	METAL CHIP	47K	5%	1/10W
R840	1-216-817-11	METAL CHIP	470	5%	1/10W
R841	1-216-833-11	METAL CHIP	10K	5%	1/10W
R843	1-216-821-11	METAL CHIP	1K	5%	1/10W
R844	1-216-864-11	SHORT CHIP	0		
R845	1-216-845-11	METAL CHIP	100K	5%	1/10W
R846	1-216-857-11	METAL CHIP	1M	5%	1/10W
R847	1-216-837-11	METAL CHIP	22K	5%	1/10W
R848	1-216-837-11	METAL CHIP	22K	5%	1/10W
R849	1-216-833-11	METAL CHIP	10K	5%	1/10W
R850	1-216-853-11	METAL CHIP	470K	5%	1/10W
R852	1-216-845-11	METAL CHIP	100K	5%	1/10W (E41,BR,MX)
R853	1-216-845-11	METAL CHIP	100K	5%	1/10W (CET,E41,E92)
R854	1-216-821-11	METAL CHIP	1K	5%	1/10W
R855	1-216-864-11	SHORT CHIP	0 (CET,E92)		
R856	1-216-864-11	SHORT CHIP	0 (BR,MX)		
R857	1-216-841-11	METAL CHIP	47K	5%	1/10W
R858	1-216-821-11	METAL CHIP	1K	5%	1/10W
R859	1-216-821-11	METAL CHIP	1K	5%	1/10W
R860	1-216-821-11	METAL CHIP	1K	5%	1/10W
R861	1-216-821-11	METAL CHIP	1K	5%	1/10W
R862	1-216-821-11	METAL CHIP	1K	5%	1/10W
R863	1-216-821-11	METAL CHIP	1K	5%	1/10W
R864	1-216-821-11	METAL CHIP	1K	5%	1/10W
R865	1-216-821-11	METAL CHIP	1K	5%	1/10W
R866	1-216-821-11	METAL CHIP	1K	5%	1/10W
R868	1-216-821-11	METAL CHIP	1K	5%	1/10W
R869	1-216-821-11	METAL CHIP	1K	5%	1/10W
R870	1-216-821-11	METAL CHIP	1K	5%	1/10W
R871	1-216-821-11	METAL CHIP	1K	5%	1/10W
R872	1-216-821-11	METAL CHIP	1K	5%	1/10W
R873	1-216-821-11	METAL CHIP	1K	5%	1/10W
R874	1-216-821-11	METAL CHIP	1K	5%	1/10W
R875	1-216-821-11	METAL CHIP	1K	5%	1/10W
R876	1-216-821-11	METAL CHIP	1K	5%	1/10W
R877	1-216-821-11	METAL CHIP	1K	5%	1/10W

Ref. No.	Part No.	Description			Remark
R878	1-216-821-11	METAL CHIP	1K	5%	1/10W
R879	1-216-821-11	METAL CHIP	1K	5%	1/10W
R880	1-216-821-11	METAL CHIP	1K	5%	1/10W
R881	1-216-821-11	METAL CHIP	1K	5%	1/10W
R882	1-216-829-11	METAL CHIP	4.7K	5%	1/10W
R883	1-216-833-11	METAL CHIP	10K	5%	1/10W
R884	1-216-821-11	METAL CHIP	1K	5%	1/10W
R885	1-216-845-11	METAL CHIP	100K	5%	1/10W
R886	1-216-845-11	METAL CHIP	100K	5%	1/10W
R887	1-216-845-11	METAL CHIP	100K	5%	1/10W
R889	1-216-845-11	METAL CHIP	100K	5%	1/10W
R890	1-216-821-11	METAL CHIP	1K	5%	1/10W
R891	1-216-821-11	METAL CHIP	1K	5%	1/10W
R892	1-216-821-11	METAL CHIP	1K	5%	1/10W
R893	1-216-821-11	METAL CHIP	1K	5%	1/10W
R894	1-216-821-11	METAL CHIP	1K	5%	1/10W
R895	1-216-821-11	METAL CHIP	1K	5%	1/10W
R896	1-216-821-11	METAL CHIP	1K	5%	1/10W
R897	1-216-821-11	METAL CHIP	1K	5%	1/10W
R898	1-216-841-11	METAL CHIP	47K	5%	1/10W
R899	1-216-864-11	SHORT CHIP	0		
R901	1-216-821-11	METAL CHIP	1K	5%	1/10W
R903	1-216-845-11	METAL CHIP	100K	5%	1/10W
R904	1-216-825-11	METAL CHIP	2.2K	5%	1/10W
R905	1-216-825-11	METAL CHIP	2.2K	5%	1/10W
R906	1-216-825-11	METAL CHIP	2.2K	5%	1/10W
R907	1-216-825-11	METAL CHIP	2.2K	5%	1/10W
R909	1-216-825-11	METAL CHIP	2.2K	5%	1/10W
R910	1-216-825-11	METAL CHIP	2.2K	5%	1/10W
R911	1-216-825-11	METAL CHIP	2.2K	5%	1/10W
R912	1-216-825-11	METAL CHIP	2.2K	5%	1/10W
R913	1-216-864-11	SHORT CHIP	0		
R914	1-216-797-11	METAL CHIP	10	5%	1/10W
R915	1-216-864-11	SHORT CHIP	0		
R916	1-216-825-11	METAL CHIP	2.2K	5%	1/10W
R917	1-216-825-11	METAL CHIP	2.2K	5%	1/10W
R918	1-216-825-11	METAL CHIP	2.2K	5%	1/10W
R919	1-216-825-11	METAL CHIP	2.2K	5%	1/10W
R920	1-216-809-11	METAL CHIP	100	5%	1/10W
R921	1-216-797-11	METAL CHIP	10	5%	1/10W
R922	1-216-825-11	METAL CHIP	2.2K	5%	1/10W
R923	1-216-825-11	METAL CHIP	2.2K	5%	1/10W
R924	1-216-829-11	METAL CHIP	4.7K	5%	1/10W
R927	1-218-879-11	METAL CHIP	22K	0.5%	1/10W
R928	1-218-871-11	METAL CHIP	10K	0.5%	1/10W
R930	1-218-855-11	METAL CHIP	2.2K	0.5%	1/10W
R945	1-216-809-11	METAL CHIP	100	5%	1/10W
R946	1-216-809-11	METAL CHIP	100	5%	1/10W
R947	1-216-797-11	METAL CHIP	10	5%	1/10W
		< VARISTOR >			
VR102	1-801-862-11	VARISTOR, CHIP (1608)			
VR202	1-801-862-11	VARISTOR, CHIP (1608)			
VR501	1-801-862-11	VARISTOR, CHIP (1608)			
		< VIBRATOR >			
X802	1-814-180-21	VIBRATOR, CERAMIC (10MHz)			

****

Ref. No.	Part No.	Description			Remark
		POWER BOARD			
		**********			
	1-533-217-41	HOLDER, FUSE			
		< CAPACITOR >			
C981	1-162-995-11	CERAMIC CHIP	0.022uF		50V
C982	1-162-995-11	CERAMIC CHIP	0.022uF		50V
C983	1-162-995-11	CERAMIC CHIP	0.022uF		50V
C984	1-162-995-11	CERAMIC CHIP	0.022uF		50V
C985	1-126-943-11	ELECT	2200uF	20%	25V
C986	1-100-591-11	CERAMIC CHIP	1uF	10%	25V
C987	1-100-162-11	CERAMIC CHIP	1uF		50V
C988	1-162-995-11	CERAMIC CHIP	0.022uF		50V
		< CONNECTOR >			
CN983	1-564-321-00	PIN, CONNECTOR (3.96mm PITCH) 2P (BR)			
CN984	1-564-321-00	PIN, CONNECTOR (3.96mm PITCH) 2P (BR)			
CN985	1-564-321-00	PIN, CONNECTOR (3.96mm PITCH) 2P (BR)			
		< DIODE >			
D981	6-501-569-01	DIODE 1N5401-C352			
D982	6-501-569-01	DIODE 1N5401-C352			
D983	6-501-569-01	DIODE 1N5401-C352			
D984	6-501-569-01	DIODE 1N5401-C352			

****

		POWER KEY BOARD			
		**********			
	3-831-441-99	SHEET (1)			
		< RESISTOR >			
R421	1-216-809-11	METAL CHIP	100	5%	1/10W
R422	1-216-813-11	METAL CHIP	220	5%	1/10W
R423	1-216-817-11	METAL CHIP	470	5%	1/10W
R424	1-216-821-11	METAL CHIP	1K	5%	1/10W
		< SWITCH >			
S403	1-786-726-11	SWITCH, TACTILE (DSPL/ENT)			
S408	1-786-726-11	SWITCH, TACTILE (POWER)			
S410	1-786-726-11	SWITCH, TACTILE (SLEEP)			

****

		SOUND KEY BOARD			
		**********			
	3-831-441-99	SHEET (1)			
		< DIODE >			
D409	6-501-691-21	LED 1L434FV22D0TD501 (USB REC)			
D410	6-502-342-11	LED 1L034FB22C0MA001 (USB PLAY)			
		< TRANSISTOR >			
Q401	8-729-027-26	TRANSISTOR DTA114YKA-T146			
Q402	8-729-027-26	TRANSISTOR DTA114YKA-T146			
Q403	8-729-027-46	TRANSISTOR DTC114YKA-T146			
Q404	8-729-027-46	TRANSISTOR DTC114YKA-T146			
		< RESISTOR >			
R433	1-216-809-11	METAL CHIP	100	5%	1/10W
R434	1-216-813-11	METAL CHIP	220	5%	1/10W
R435	1-216-817-11	METAL CHIP	470	5%	1/10W

SOUND KEY | TC | TUNER

Ref. No.	Part No.	Description			Remark
R436	1-216-821-11	METAL CHIP	1K	5%	1/10W
R437	1-216-821-11	METAL CHIP	1K	5%	1/10W
R438	1-216-825-11	METAL CHIP	2.2K	5%	1/10W
R439	1-216-821-11	METAL CHIP	1K	5%	1/10W
R440	1-216-825-11	METAL CHIP	2.2K	5%	1/10W
R441	1-216-813-11	METAL CHIP	220	5%	1/10W
R442	1-216-813-11	METAL CHIP	220	5%	1/10W
		< SWITCH >			
S409	1-786-726-11	SWITCH, TACTILE (ROCK)			
S415	1-786-726-11	SWITCH, TACTILE (DANCE)			
S416	1-786-726-11	SWITCH, TACTILE (SALSA)			
S417	1-786-726-11	SWITCH, TACTILE (FLAT)			
S419	1-786-726-11	SWITCH, TACTILE (PDW POWER DRIVE WOOFER)			
S421	1-786-726-11	SWITCH, TACTILE (REGGAETION)			

****

	A-1108-791-A	TC BOARD, COMPLETE **********			
		< CAPACITOR >			
C101	1-162-964-11	CERAMIC CHIP	0.001uF	10%	50V
C102	1-104-658-11	ELECT	100uF	20%	10V
C103	1-165-176-11	CERAMIC CHIP	0.047uF	10%	16V
C104	1-162-966-11	CERAMIC CHIP	0.0022uF	10%	50V
C105	1-162-923-11	CERAMIC CHIP	47PF	5%	50V
C107	1-162-962-11	CERAMIC CHIP	470PF	10%	50V
C201	1-162-964-11	CERAMIC CHIP	0.001uF	10%	50V
C202	1-104-658-11	ELECT	100uF	20%	10V
C203	1-165-176-11	CERAMIC CHIP	0.047uF	10%	16V
C204	1-162-966-11	CERAMIC CHIP	0.0022uF	10%	50V
C205	1-162-923-11	CERAMIC CHIP	47PF	5%	50V
C207	1-162-962-11	CERAMIC CHIP	470PF	10%	50V
C301	1-104-658-11	ELECT	100uF	20%	10V
C302	1-104-658-11	ELECT	100uF	20%	10V
C303	1-104-658-11	ELECT	100uF	20%	10V
C304	1-126-947-11	ELECT	47uF	20%	35V
C305	1-162-962-11	CERAMIC CHIP	470PF	10%	50V
C306	1-162-970-11	CERAMIC CHIP	0.01uF	10%	25V
C307	1-162-964-11	CERAMIC CHIP	0.001uF	10%	50V
C308	1-162-927-11	CERAMIC CHIP	100PF	5%	50V
C310	1-164-230-11	CERAMIC CHIP	220PF	5%	50V
		< CONNECTOR >			
CN303	1-784-774-11	CONNECTOR, FFC 13P			
		< IC >			
IC301	6-710-092-01	IC TA2068NG(5,HZ)			
		< JUMPER RESISTOR >			
JC301	1-216-864-11	SHORT CHIP	0		
JC302	1-216-864-11	SHORT CHIP	0		
JC303	1-216-864-11	SHORT CHIP	0		
JC304	1-216-864-11	SHORT CHIP	0		
JC305	1-216-864-11	SHORT CHIP	0		
JC306	1-216-295-11	SHORT CHIP	0		
JC307	1-216-864-11	SHORT CHIP	0		
JC308	1-216-295-11	SHORT CHIP	0		
JC309	1-216-864-11	SHORT CHIP	0		

Ref. No.	Part No.	Description			Remark
		< TRANSISTOR >			
Q301	8-729-901-81	TRANSISTOR 2SC2412K-T-146-R			
Q302	8-729-907-00	TRANSISTOR DTC114EU			
Q303	8-729-907-00	TRANSISTOR DTC114EU			
		< RESISTOR >			
R101	1-216-835-11	METAL CHIP	15K	5%	1/10W
R102	1-216-807-11	METAL CHIP	68	5%	1/10W
R103	1-216-843-11	METAL CHIP	68K	5%	1/10W
R104	1-216-835-11	METAL CHIP	15K	5%	1/10W
R105	1-216-835-11	METAL CHIP	15K	5%	1/10W
R106	1-216-825-11	METAL CHIP	2.2K	5%	1/10W
R110	1-216-809-11	METAL CHIP	100	5%	1/10W
R111	1-216-829-11	METAL CHIP	4.7K	5%	1/10W
R112	1-216-827-11	METAL CHIP	3.3K	5%	1/10W
R201	1-216-835-11	METAL CHIP	15K	5%	1/10W
R202	1-216-807-11	METAL CHIP	68	5%	1/10W
R203	1-216-843-11	METAL CHIP	68K	5%	1/10W
R204	1-216-835-11	METAL CHIP	15K	5%	1/10W
R205	1-216-835-11	METAL CHIP	15K	5%	1/10W
R206	1-216-825-11	METAL CHIP	2.2K	5%	1/10W
R210	1-216-025-11	METAL CHIP	100	5%	1/10W
R211	1-216-829-11	METAL CHIP	4.7K	5%	1/10W
R212	1-216-827-11	METAL CHIP	3.3K	5%	1/10W
R301	1-216-857-11	METAL CHIP	1M	5%	1/10W
R302	1-216-829-11	METAL CHIP	4.7K	5%	1/10W
R303	1-216-829-11	METAL CHIP	4.7K	5%	1/10W
R304	1-216-821-11	METAL CHIP	1K	5%	1/10W
R305	1-216-817-11	METAL CHIP	470	5%	1/10W
R306	1-218-867-11	METAL CHIP	6.8K	0.5%	1/10W
R307	1-216-797-11	METAL CHIP	10	5%	1/10W
R308	1-216-837-11	METAL CHIP	22K	5%	1/10W
R309	1-216-805-11	METAL CHIP	47	5%	1/10W
R310	1-216-857-11	METAL CHIP	1M	5%	1/10W
R311	1-216-857-11	METAL CHIP	1M	5%	1/10W
R314	1-216-817-11	METAL CHIP	470	5%	1/10W
R315	1-216-817-11	METAL CHIP	470	5%	1/10W
		< SWITCH >			
S301	1-786-126-11	SWITCH, SLIDE (REC/PB)			
		< TRANSFORMER >			
T301	1-416-041-41	TRANSFORMER, BIAS OSCILLATION			

****

	A-1244-419-A	TUNER BOARD, COMPLETE **********			
	2-895-061-01	TERMINAL, ANTENNA			
		< CAPACITOR >			
C1	1-162-923-11	CERAMIC CHIP	47PF	5%	50V
C4	1-162-964-11	CERAMIC CHIP	0.001uF	10%	50V
C7	1-162-910-11	CERAMIC CHIP	5PF	0.25PF	50V
C8	1-162-964-11	CERAMIC CHIP	0.001uF	10%	50V
C9	1-162-915-11	CERAMIC CHIP	10PF	0.5PF	50V
C10	1-126-960-11	ELECT	1uF	20%	50V
C11	1-107-826-11	CERAMIC CHIP	0.1uF	10%	16V
C12	1-126-963-11	ELECT	4.7uF	20%	50V
C14	1-162-970-11	CERAMIC CHIP	0.01uF	10%	25V

Ref. No.	Part No.	Description			Remark
C15	1-162-970-11	CERAMIC CHIP	0.01uF	10%	25V
C18	1-126-923-11	ELECT	220uF	20%	10V
C20	1-107-826-11	CERAMIC CHIP	0.1uF	10%	16V
C21	1-126-960-11	ELECT	1uF	20%	50V
C22	1-107-826-11	CERAMIC CHIP	0.1uF	10%	16V
C23	1-126-960-11	ELECT	1uF	20%	50V
C24	1-162-960-11	CERAMIC CHIP	220PF	10%	50V
C26	1-162-927-11	CERAMIC CHIP	100PF	5%	50V
C27	1-162-927-11	CERAMIC CHIP	100PF	5%	50V
C29	1-104-658-11	ELECT	100uF	20%	10V
C30	1-162-970-11	CERAMIC CHIP	0.01uF	10%	25V
C31	1-162-919-11	CERAMIC CHIP	22PF	5%	50V
C32	1-162-964-11	CERAMIC CHIP	0.001uF	10%	50V
C33	1-162-970-11	CERAMIC CHIP	0.01uF	10%	25V
C34	1-162-970-11	CERAMIC CHIP	0.01uF	10%	25V
C35	1-162-970-11	CERAMIC CHIP	0.01uF	10%	25V
C37	1-162-970-11	CERAMIC CHIP	0.01uF	10%	25V
C39	1-107-826-11	CERAMIC CHIP	0.1uF	10%	16V
C41	1-164-230-11	CERAMIC CHIP	220PF	5%	50V
C42	1-162-927-11	CERAMIC CHIP	100PF	5%	50V
C43	1-162-919-11	CERAMIC CHIP	22PF	5%	50V
C47	1-162-915-11	CERAMIC CHIP	10PF	0.5PF	50V
C49	1-161-051-00	CERAMIC	0.01uF	10%	25V
C51	1-162-919-11	CERAMIC CHIP	22PF	5%	50V
C52	1-162-915-11	CERAMIC CHIP	10PF	0.5PF	50V
C53	1-137-190-11	FILM	0.22uF	5%	50V
C54	1-126-923-11	ELECT	220uF	20%	10V
C55	1-162-927-11	CERAMIC CHIP	100PF	5%	50V
C56	1-162-964-11	CERAMIC CHIP	0.001uF	10%	50V
C57	1-162-964-11	CERAMIC CHIP	0.001uF	10%	50V
C59	1-162-927-11	CERAMIC CHIP	100PF	5%	50V
C60	1-162-964-11	CERAMIC CHIP	0.001uF	10%	50V
C61	1-162-927-11	CERAMIC CHIP	100PF	5%	50V
C62	1-162-927-11	CERAMIC CHIP	100PF	5%	50V
C63	1-162-927-11	CERAMIC CHIP	100PF	5%	50V
C65	1-126-963-11	ELECT	4.7uF	20%	50V
C66	1-162-927-11	CERAMIC CHIP	100PF	5%	50V
C68	1-162-927-11	CERAMIC CHIP	100PF	5%	50V
C77	1-162-968-11	CERAMIC CHIP	0.0047uF	10%	50V
C78	1-162-968-11	CERAMIC CHIP	0.0047uF	10%	50V
C80	1-162-970-11	CERAMIC CHIP	0.01uF	10%	25V
C95	1-162-964-11	CERAMIC CHIP	0.001uF	10%	50V
		< FILTER >			
CF2	1-760-235-81	FILTER, CERAMIC			
CF4	1-781-962-21	FILTER, CERAMIC			
		< CONNECTOR >			
CNP1	1-568-854-11	CONNECTOR, FFC 11P			
		< TRIMMER >			
CT1	1-141-227-00	TRIMMER, CERAMIC 20PF			
CT3	1-141-304-21	CAP, CERAMIC TRIMMER 10PF			
		< DIODE >			
D1	8-719-078-48	DIODE KV1471ETR-G			
D2	8-719-078-48	DIODE KV1471ETR-G			
D3	8-719-050-69	DIODE KV1520N			
D10	8-719-988-61	DIODE 1SS355TE-17			
D11	8-719-988-61	DIODE 1SS355TE-17			

Ref. No.	Part No.	Description			Remark
		< IC >			
IC1	6-700-512-01	IC TA2149BN			
IC2	8-759-483-40	IC LC72137M-TLM-E			
		< JUMPER RESISTOR >			
JC1	1-216-864-11	SHORT CHIP	0		
JC2	1-216-864-11	SHORT CHIP	0		
JC3	1-216-864-11	SHORT CHIP	0		
JC4	1-216-864-11	SHORT CHIP	0		
JC5	1-216-864-11	SHORT CHIP	0		
JC6	1-216-864-11	SHORT CHIP	0		
JC11	1-216-864-11	SHORT CHIP	0		
JC12	1-216-864-11	SHORT CHIP	0		
JC13	1-216-864-11	SHORT CHIP	0		
JC24	1-216-864-11	SHORT CHIP	0		
JC33	1-216-864-11	SHORT CHIP	0		
JC34	1-216-864-11	SHORT CHIP	0		
		< COIL >			
L1	1-409-775-11	COIL, AIR-CORE			
L2	1-416-509-11	COIL, AIR-CORE			
L3	1-754-117-12	ANTENNA, FERRITE-ROD (AM)			
L4	1-411-234-21	COIL, AM OSC			
L21	1-410-509-11	INDUCTOR	10uH		
		< RESISTOR >			
R1	1-216-817-11	METAL CHIP	470	5%	1/10W
R2	1-216-817-11	METAL CHIP	470	5%	1/10W
R3	1-216-833-11	METAL CHIP	10K	5%	1/10W
R4	1-216-833-11	METAL CHIP	10K	5%	1/10W
R5	1-216-821-11	METAL CHIP	1K	5%	1/10W
R10	1-216-805-11	METAL CHIP	47	5%	1/10W
R11	1-216-825-11	METAL CHIP	2.2K	5%	1/10W
R13	1-216-821-11	METAL CHIP	1K	5%	1/10W
R14	1-216-821-11	METAL CHIP	1K	5%	1/10W
R24	1-216-813-11	METAL CHIP	220	5%	1/10W
R30	1-216-837-11	METAL CHIP	22K	5%	1/10W
R31	1-216-829-11	METAL CHIP	4.7K	5%	1/10W
R32	1-216-845-11	METAL CHIP	100K	5%	1/10W
R33	1-216-833-11	METAL CHIP	10K	5%	1/10W
R40	1-216-849-11	METAL CHIP	220K	5%	1/10W
R41	1-216-833-11	METAL CHIP	10K	5%	1/10W
R50	1-216-821-11	METAL CHIP	1K	5%	1/10W
R51	1-216-833-11	METAL CHIP	10K	5%	1/10W
R52	1-216-864-11	SHORT CHIP	0		
R53	1-216-829-11	METAL CHIP	4.7K	5%	1/10W
R54	1-216-817-11	METAL CHIP	470	5%	1/10W
R55	1-216-833-11	METAL CHIP	10K	5%	1/10W
R56	1-216-813-11	METAL CHIP	220	5%	1/10W
R57	1-216-809-11	METAL CHIP	100	5%	1/10W
R58	1-216-825-11	METAL CHIP	2.2K	5%	1/10W
R59	1-216-825-11	METAL CHIP	2.2K	5%	1/10W
R60	1-216-825-11	METAL CHIP	2.2K	5%	1/10W
R61	1-216-825-11	METAL CHIP	2.2K	5%	1/10W
R63	1-216-833-11	METAL CHIP	10K	5%	1/10W
R65	1-216-833-11	METAL CHIP	10K	5%	1/10W
R91	1-216-813-11	METAL CHIP	220	5%	1/10W
R92	1-216-813-11	METAL CHIP	220	5%	1/10W
R94	1-216-821-11	METAL CHIP	1K	5%	1/10W

TUNER | USB | VOLTAGE SELECTOR | VOLUME KEY

Ref. No.	Part No.	Description	Remark
		< TRANSFORMER >	
T1	1-433-741-11	TRANSFORMER, IF	
T2	1-419-465-11	COIL (DET)	
		< VIBRATOR >	
X1	1-795-449-11	VIBRATOR, CRYSTAL (75kHz)	
**********			
	A-1602-158-A	USB BOARD, COMPLETE **********	
	3-252-827-01	SCREW (B2.6), (+) BV TAPPING	
	4-110-347-01	HOLDER, USB	
		< DIODE >	
D1004	8-719-991-33	DIODE 1SS133T-77	
D1005	8-719-991-33	DIODE 1SS133T-77	
		< JUMPER RESISTOR >	
FB1001	1-216-295-11	SHORT CHIP 0	
FB1004	1-216-295-11	SHORT CHIP 0	
FB1006	1-216-864-11	SHORT CHIP 0	
FB1007	1-216-864-11	SHORT CHIP 0	
		< CONNECTOR >	
J1001	1-794-990-11	CONNECTOR, USB (A) 5P (USB)	
		< COIL >	
L1001	1-456-799-11	COIL, COMMON MODE CHOKE	
**********			
	1-878-337-11	VOLTAGE SELECTOR BOARD (BR) **********	
	1-533-233-31	HOLDER, FUSE	
		< SWITCH >	
⚠ S981	1-786-870-11	SWITCH, POWER VOLTAGE CHANGE (VOLTAGE SELECTOR)	
**********			
		VOLUME KEY BOARD **********	
	3-831-441-99	SHEET (1)	
	3-831-441-11	CUSHION (B)	
		< RESISTOR >	
R425	1-216-809-11	METAL CHIP 100 5% 1/10W	
R426	1-216-813-11	METAL CHIP 220 5% 1/10W	
R427	1-216-817-11	METAL CHIP 470 5% 1/10W	
R428	1-216-821-11	METAL CHIP 1K 5% 1/10W	
R429	1-216-821-11	METAL CHIP 1K 5% 1/10W	
R430	1-216-825-11	METAL CHIP 2.2K 5% 1/10W	
R431	1-216-821-11	METAL CHIP 1K 5% 1/10W	
R432	1-216-825-11	METAL CHIP 2.2K 5% 1/10W	
		< SWITCH >	
S404	1-786-726-11	SWITCH, TACTILE (MODE)	
S407	1-786-726-11	SWITCH, TACTILE (VOL +)	
S411	1-786-726-11	SWITCH, TACTILE (RADIO/BAND/AUTO PRESET)	
S412	1-786-726-11	SWITCH, TACTILE (AUDIO IN)	
S418	1-786-726-11	SWITCH, TACTILE (REPEAT)	
S420	1-786-726-11	SWITCH, TACTILE (VOL –)	
**********			
		MISCELLANEOUS **********	
105	1-500-868-11	CORE, FERRITE	
⚠ 160	8-820-126-02	OPTICAL PICK-UP (KSM-213CDP/C2NP)	
164	1-832-404-21	CABLE, FLEXIBLE FLAT (16 CORE)	
206	1-452-899-11	MAGNET	
212	1-500-868-11	CORE, FERRITE	
ANT1	1-754-376-11	ANTENNA, TELESCOPIC (FM)	
CNP2	1-833-922-11	CORD, CONNECTION (WITH PLUG) (AUDIO IN)	
D401	6-501-691-01	LED 1L434FV22D0TDF01 (ILLUMINATION)	
D402	6-501-691-01	LED 1L434FV22D0TDF01 (ILLUMINATION)	
D403	6-501-691-01	LED 1L434FV22D0TDF01 (ILLUMINATION)	
D404	6-501-691-01	LED 1L434FV22D0TDF01 (ILLUMINATION)	
D405	6-501-691-01	LED 1L434FV22D0TDF01 (ILLUMINATION)	
D406	6-501-691-01	LED 1L434FV22D0TDF01 (ILLUMINATION)	
D407	6-501-691-01	LED 1L434FV22D0TDF01 (ILLUMINATION)	
D408	6-501-691-01	LED 1L434FV22D0TDF01 (ILLUMINATION)	
⚠ F981	1-533-471-12	FUSE, GLASS TUBE (DIA. 5) (4A/250V)	
⚠ F982	1-533-470-12	FUSE, GLASS TUBE (DIA. 5) (3.15A/250V)	
⚠ F983	1-533-462-12	FUSE, GLASS TUBE (DIA. 5) (0.5A/250V) (BR)	
HE901	1-500-813-11	HEAD, ERASE (ERASE)	
HRP901	3-266-053-01	HEAD, RP (REC/PB)	
⚠ J981	1-526-838-11	INLET, AC 2P (∿ AC IN) (CET,E41,BR)	
⚠ J981	1-540-009-12	INLET, AC (∿ AC IN) (E92,MX)	
S701	1-572-085-21	SWITCH, LEAF (LIMIT)	
SP191	1-858-162-21	LOUD SPEAKER (L-CH) (FULL RANGE)	
SP291	1-858-162-21	LOUD SPEAKER (R-CH) (FULL RANGE)	
SP393	1-826-683-11	SPEAKER (13cm) (WOOFER)	
SW2	1-692-960-11	SWITCH, PUSH (1 KEY) (⏏ PUSH OPEN/CLOSE)	
⚠ T981	1-435-964-12	TRANSFORMER, POWER (E92,MX)	
⚠ T981	1-435-965-12	TRANSFORMER, POWER (CET,E41)	
⚠ T981	1-435-966-12	TRANSFORMER, POWER (BR)	
**********			
		ACCESSORIES **********	
⚠	1-769-412-22	CORD, POWER (CET,E41)	
⚠	1-834-027-12	CORD, POWER (E92,MX)	
⚠	1-836-154-11	CORD SET, POWER (BR)	
	4-127-406-11	MANUAL, INSTRUCTION (ENGLISH) (E92,MX)	
	4-127-406-21	MANUAL, INSTRUCTION (SPANISH) (E92,MX)	
	4-127-406-31	MANUAL, INSTRUCTION (PORTUGUESE) (BR)	
	4-127-406-41	MANUAL, INSTRUCTION (ENGLISH) (CET,E41)	
	4-127-406-51	MANUAL, INSTRUCTION (FRENCH) (CET)	
	4-127-406-61	MANUAL, INSTRUCTION (GERMAN) (CET)	
	4-127-406-71	MANUAL, INSTRUCTION (DUTCH) (CET)	
	4-127-406-81	MANUAL, INSTRUCTION (SPANISH) (CET,E41)	
	4-127-406-91	MANUAL, INSTRUCTION (PORTUGUESE) (CET)	
	4-127-407-11	MANUAL, INSTRUCTION (RUSSIAN) (CET)	
	4-127-407-21	MANUAL, INSTRUCTION (UKRAINIAN) (CET)	
	7-685-103-19	SCREW +P 2X5 TYPE2 NON-SLIT	
	A-1609-671-A	REMOTE COMANDER (RMT-CG880A) (including BATTERY LID) (EXCEPT CET)	
	A-1609-672-A	REMOTE COMANDER (RMT-CG880AD) (including BATTERY LID) (CET)	

MEMO

REVISION HISTORY

Checking the version allows you to jump to the revised page.
Also, clicking the version at the top of the revised page allows you to jump to the next revised page.

Ver.	Date	Description of Revision
1.0	2009.01	New