HCD-GT22/GT44/GT55

SERVICE MANUAL

Ver. 1.0 2007.06

E Model
HCD-GT22/GT44/GT55
Australian Model
HCD-GT22/GT44

Photo: HCD-GT55

- HCD-GT22 is the amplifier, USB, CD player, tape deck and tuner section in MHC-GT22.
- HCD-GT44 is the amplifier, USB, CD player, tape deck and tuner section in MHC-GT44.
- HCD-GT55 is the amplifier, USB, CD player, tape deck and tuner section in MHC-GT55.

CD Section	Model Name Using Similar Mechanism	NEW
	CD Mechanism Type	CDM74KF-K6BD91UR-WOD
	Base Unit Name	BU-K6BD91UR-WOD74
	Optical Pick-up Block Name	KSM-213DCP
TAPE Section	Model Name Using Similar Mechanism	NEW
	Tape Transport Mechanism Type	CWN42FF609

SPECIFICATIONS

Amplier section

HCD-GT55

The following are measured at AC 120, 127, 220, 240V 50/60Hz
Front speaker
Power output (rated): 110 W + 110 W (at 6 Ω, 1 kHz, 1% THD)
RMS output power (reference): 200 W + 200 W (per channel at 6 Ω, 1 kHz, 10% THD)
Subwoofer
RMS output power (reference): 190 W (at 6 Ω, 80 Hz, 10% THD)

HCD-GT44

The following are measured at AC 120, 127, 220, 240V 50/60Hz
Front speaker
Power output (rated): 90 W + 90 W (at 6 Ω, 1 kHz, 1% THD)
RMS output power (reference): 150 W + 150 W (per channel at 6 Ω, 1 kHz, 10% THD)
Subwoofer
RMS output power (reference): 150 W (at 6 Ω, 80 Hz, 10% THD)

HCD-GT22

The following are measured at AC 120, 127, 220, 240V 50/60Hz
Power output (rated): 110 W + 110 W (at 6 Ω, 1 kHz, 1% THD)
RMS output power (reference): 200 W + 200 W (per channel at 6 Ω, 1 kHz, 10% THD)

Inputs

AUDIO (phono jack): voltage 250 mV, impedance 47 kilohms
MIC (phone jack): sensitivity 1 mV, impedance 10 kilohms
(USB) port: Type A

Outputs

PHONES (stereo mini jack): accepts headphones of 8 Ω or more
SPEAKER: accepts impedance of 6 to 16 Ω
SUB WOOFER OUT (HCD-GT55/GT44 only): accepts impedance of 6 to 16 Ω

USB section

Supported bit rate
MP3 (MPEG 1 Audio Layer-3): 32 – 320 kbps, VBR
Sampling frequencies
MP3 (MPEG 1 Audio Layer-3): 32/44.1/48 kHz
Transfer speed
Full-Speed
Supported USB device
Mass Storage Class
Maximum current
500 mA

CD player section

System: Compact disc and digital audio system
Laser: Semiconductor laser (λ=770 – 810 nm)
Emission duration: continuous
Frequency response: 20 Hz – 20 kHz
Signal-to-noise ratio: More than 90 dB
Dynamic range: More than 88 dB

– Continued on next page –

COMPACT DISC DECK RECEIVER

9-887-722-01
2007F05-1
© 2007.06

Sony Corporation
Personal Audio Division
Published by Sony Techno Create Corporation

SONY®

Tape deck section

Recording system: 4-track 2-channel, stereo
Frequency response: 50 – 13,000 Hz (±3 dB), using Sony TYPE I cassettes

Tuner section

FM stereo, FM/AM superheterodyne tuner

FM tuner section:
Tuning range:
87.5 – 108.0 MHz (50 kHz step)
Antenna: FM lead antenna
Antenna terminals: 75 ohms unbalanced
Intermediate frequency: 10.7 MHz
AM tuner section:
Tuning range
Latin American and Oceanian models:
530 – 1,710 kHz (with 10 kHz tuning interval)
531 – 1,710 kHz (with 9 kHz tuning interval)
Other models:
530 – 1,610 kHz (with 10 kHz tuning interval)
531 – 1,602 kHz (with 9 kHz tuning interval)
Antenna: AM loop antenna, external antenna terminal
Intermediate frequency: 450 kHz

General

Power requirements
Oceanian model: AC 230 – 240 V, 50/60 Hz
Mexican model: AC 127 V, 60 Hz
Argentine model: AC 220 V, 50/60 Hz
Other models: AC 120, 220 or 230 – 240 V, 50/60 Hz, Adjustable with voltage selector
Power consumption
HCD-GT55: 225 W
HCD-GT44: 250 W
HCD-GT22: 150 W

Dimensions (w/h/d) (excl. speakers)
HCD-GT55:
Approx. 280 × 365 × 425 mm
HCD-GT44/GT22:
Approx. 280 × 325 × 425 mm
Mass (excl. speakers)
HCD-GT55: 10.5 kg
HCD-GT44/GT22: 10.0 kg

Design and specifications are subject to change without notice.

Notes on chip component replacement

- Never reuse a disconnected chip component.
- Notice that the minus side of a tantalum capacitor may be damaged by heat.

Flexible Circuit Board Repairing

- Keep the temperature of the soldering iron around 270 ˚C during repairing.
- Do not touch the soldering iron on the same conductor of the circuit board (within 3 times).
- Be careful not to apply force on the conductor when soldering or unsoldering.

CAUTION
Use of controls or adjustments or performance of procedures other than those specified herein may result in hazardous radiation exposure.

CLASS 1 LASER PRODUCT
LUOKAN 1 LASERLAITE
KLASS 1 LASERAPPARAT

This appliance is classified as a CLASS 1 LASER product. This marking is located on the rear exterior.

SAFETY-RELATED COMPONENT WARNING!!

COMPONENTS IDENTIFIED BY MARK ⚠ OR DOTTED LINE WITH MARK ⚠ ON THE SCHEMATIC DIAGRAMS AND IN THE PARTS LIST ARE CRITICAL TO SAFE OPERATION. REPLACE THESE COMPONENTS WITH SONY PARTS WHOSE PART NUMBERS APPEAR AS SHOWN IN THIS MANUAL OR IN SUPPLEMENTS PUBLISHED BY SONY.

TABLE OF CONTENTS

1. SERVICING NOTES 4

2. GENERAL 6

3. DISASSEMBLY
3-1. Disassembly Flow 7
3-2. Case (Side-L), Case (Side-R) 8
3-3. Case (Top) 8
3-4. Lid (CD) 9
3-5 CD Mechanism Deck (CDM74KF-K6BD91UR-WOD), USB board 9
3-6. Front Panel Block 10
3-7. Mecha Deck (CWN42FF609) 10
3-8. Back Panel Block 11
3-9. MAIN Board 11
3-10. CD Board 12
3-11. DRIVER Board, SW Board 12
3-12. Optical Pick-up Block (KSM-213D) 13
3-13. SENSOR Board 13
3-14. MOTOR (TB) Board 14
3-15. MOTOR (LD) Board 14

4. TEST MODE 15

5. MECHANICAL ADJUSTMENTS 19

6. ELECTRICAL ADJUSTMENTS 20

7. DIAGRAMS
7-1. Block Diagram – CD SERVO, USB Section – 23
7-2. Block Diagram – MAIN Section – 24
7-3. Block Diagram – AMP Section – 25
7-4. Block Diagram – PANEL, POWER AMP Section – 26
7-5. Printed Wiring Board – CD Board – 28
7-6. Schematic Diagram – CD Board – 29
7-7. Printed Wiring Boards – CHANGER Section – 30
7-8. Schematic Diagram – CHANGER Section – 31
7-9. Printed Wiring Board – USB Board – 32
7-10. Schematic Diagram – USB Board – 33
7-11. Printed Wiring Board – TC Board – 34
7-12. Schematic Diagram – TC Board – 35
7-13. Printed Wiring Boards – MAIN Section – 37
7-14. Schematic Diagram – MAIN Section (1/4) – 38
7-15. Schematic Diagram – MAIN Section (2/4) – 39
7-16. Schematic Diagram – MAIN Section (3/4) – 40
7-17. Schematic Diagram – MAIN Section (4/4) – 41
7-18. Printed Wiring Board – MIC Board – 42
7-19. Schematic Diagram – MIC Board – 43
7-20. Printed Wiring Board – AMP Board (GT22/GT55) – 44
7-21. Schematic Diagram – AMP Board (GT22/GT55) – 45
7-22. Printed Wiring Board – AMP Board (GT44) – 46
7-23. Schematic Diagram – AMP Board (GT44) – 47
7-24. Printed Wiring Boards – SUB WOOFER Section (GT44/GT55) – 48
7-25. Schematic Diagram – SUB WOOFER Section (GT44/GT55) – 49
7-26. Printed Wiring Boards – PANEL Section – 50
7-27. Schematic Diagram – PANEL Section – 51
7-28. Printed Wiring Boards – KEY Section – 52
7-29. Schematic Diagram – KEY Section – 53
7-30. Printed Wiring Board – TRANS Board (GT22/GT55) – 54
7-31. Schematic Diagram – TRANS Board (GT22/GT55) – 55
7-32. Printed Wiring Board – TRANS Board (GT44) – 56
7-34. Schematic Diagram – TRANS Board (GT44) – 57

8. EXPLODED VIEWS
8-1. Case Section 69
8-2. KEY TOP Board Section 70
8-3. TC Mecha Deck Section 71
8-4. PANEL Board Section 72
8-5. Front Panel Section 73
8-6. MAIN Board Section 74
8-7. POWER Board, SUB WOOFER Board Section 75
8-8. Chassis Section 76
8-9. CD Mechanism Deck Section-1 (CDM74KF-K6BD91UR-WOD) 77
8-10. CD Mechanism Deck Section-2 (CDM74KF-K6BD91UR-WOD) 78

9. ELECTRICAL PARTS LIST 79

SECTION 1
SERVICING NOTES

NOTES ON HANDLING THE OPTICAL PICK-UP BLOCK OR BASE UNIT

The laser diode in the optical pick-up block may suffer electrostatic break-down because of the potential difference generated by the charged electrostatic load, etc. on clothing and the human body.
During repair, pay attention to electrostatic break-down and also use the procedure in the printed matter which is included in the repair parts.
The flexible board is easily damaged and should be handled with care.

NOTES ON LASER DIODE EMISSION CHECK

The laser beam on this model is concentrated so as to be focused on the disc reflective surface by the objective lens in the optical pick-up block. Therefore, when checking the laser diode emission, observe from more than 30 cm away from the objective lens.

UNLEADED SOLDER

Boards requiring use of unleaded solder are printed with the lead-free mark (LF) indicating the solder contains no lead.
(Caution: Some printed circuit boards may not come printed with the lead free mark due to their particular size)

: LEAD FREE MARK

Unleaded solder has the following characteristics.

- Unleaded solder melts at a temperature about 40 °C higher than ordinary solder.
  Ordinary soldering irons can be used but the iron tip has to be applied to the solder joint for a slightly longer time.
  Soldering irons using a temperature regulator should be set to about 350 °C.
  Caution: The printed pattern (copper foil) may peel away if the heated tip is applied for too long, so be careful!
- Strong viscosity
  Unleaded solder is more viscou-s (sticky, less prone to flow) than ordinary solder so use caution not to let solder bridges occur such as on IC pins, etc.
- Usable with ordinary solder
  It is best to use only unleaded solder but unleaded solder may also be added to ordinary solder.

RELEASING THE ANTITHEFT LOCK

The disc table lock function for the antitheft of an demonstration disc in the store is equipped.

Releasing Procedure :

1. Press the I/⏻ button to turn the power on.
2. Press the CD button to select “CD”.
3. While pressing the ■ button, press the ⏏ button until “UNLOCKED” displayed on the fluorescent indicator tube (around 5 seconds).

Note: When “LOCKED” is displayed, the antitheft lock is not released by turning power on/off with the I/⏻ button.

MODEL IDENTIFICATION
– Model Number Label –

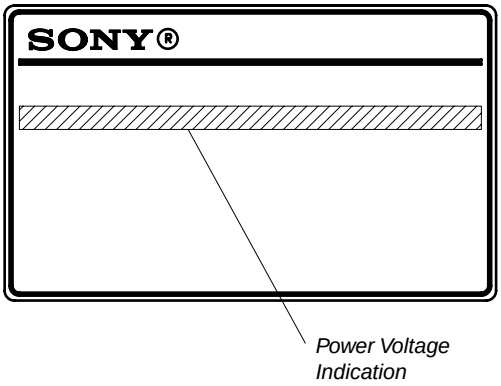

Model	Power voltage indication
GT22: E2, E3, E51	AC: 120V/220V/230-240V ∿ 50/60Hz 150W
GT22: E13, AUS	AC: 230-240V ∿ 50/60Hz 150W
GT22: MX	ca∿127V 60Hz 150W
GT22: AR	ca 220V ∿ 50/60Hz 150W
GT44: E13, AUS	AC: 230-240V ∿ 50/60Hz 250W
GT44: E2, E3, E51	AC: 120V/220V/230-240V ∿ 50/60Hz 250W
GT44: MX	ca∿127V 60Hz 250W
GT44: AR	ca 220V ∿ 50/60Hz 250W
GT55: E2, E51	AC: 120V/220V/230-240V ∿ 50/60Hz 225W
GT55: MX	ca∿127V 60Hz 225W
GT55: AR	ca 220V ∿ 50/60Hz 225W

- Abbreviation
  AR : Argentina model
  AUS : Australian model
  E2 : 120V AC Area in E model
  E3 : 240V AC Area in E model
  E13 : 220V - 230V AC Area in E model
  E51 : Chilean and Peruvian models
  MX : Mexican model

SERVICE POSITION

In checking the CD mechanism deck, prepare jig (extension cable J-2501-248-A (27 core/300 mm))/J-2501-077-A (13 core/300 mm)

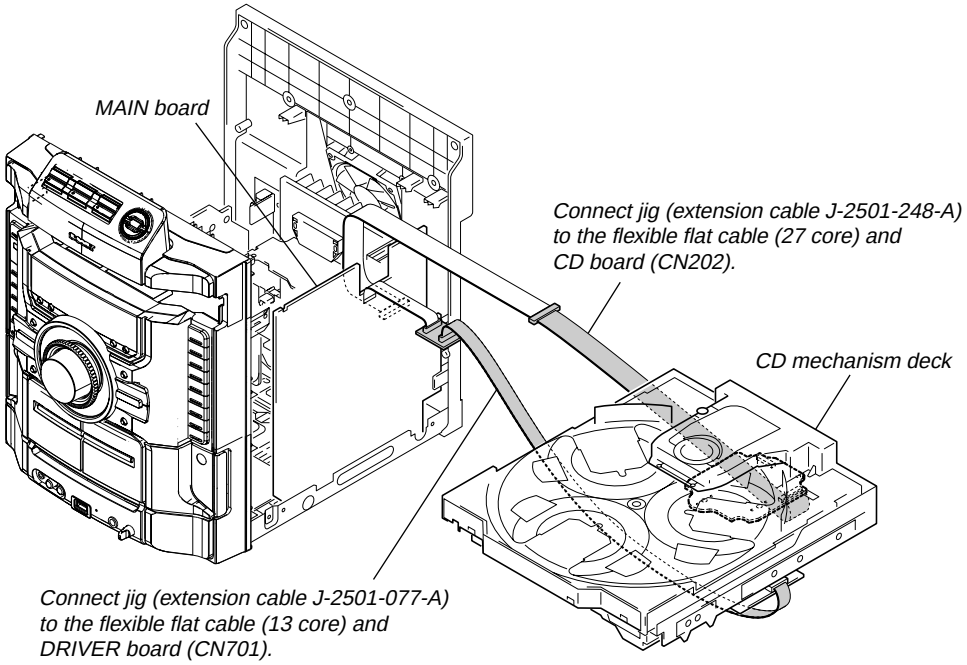

HOW TO OPEN THE TRAY WHEN POWER SWITCH TURN OFF

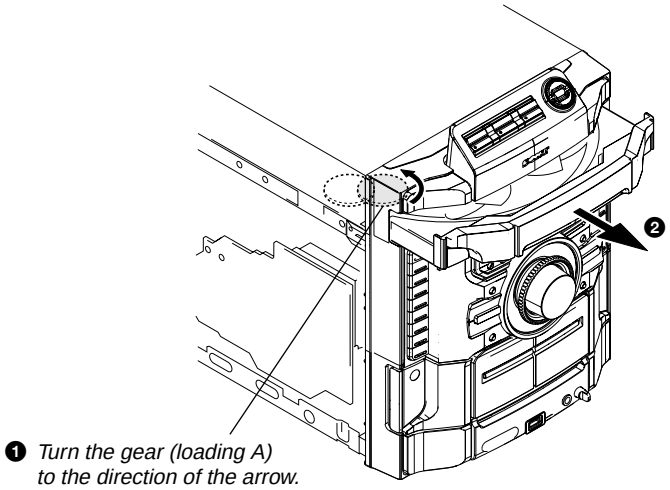

SECTION 2
GENERAL

This section is extracted from instruction manual.

• Location of Controls

Unit
HCD-GT55

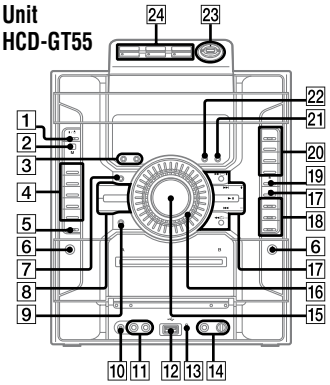

HCD-GT44/GT22

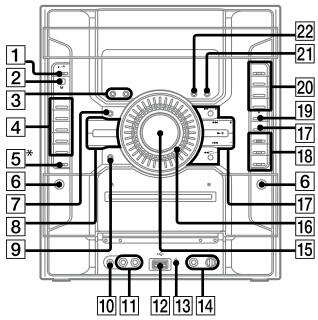

* HCD-GT44 only

Remote

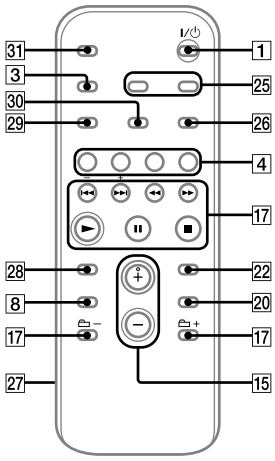

1
I/⏻ (on/standby)
Press to turn on the system.

Unit: STANDBY indicator
Lights up when the system is off.

2
Remote sensor

3
DISPLAY
Press to change the information on the display.

Unit: ILLUMINATION
Press to change the illumination pattern around MASTER VOLUME 15.

4
CD
Press to select the CD function.

TUNER/BAND
Press to select the TUNER function. Press to select FM or AM reception mode.

Unit: TAPE A/B
Press to select the TAPE function. Press to select TAPE A or TAPE B.

Unit: AUDIO
Press to select the AUDIO function.

USB
Press to select the USB function.

Remote: FUNCTION
Press to select the function.

5 (HCD-GT55/GT44 only)
SUBWOOFER
Press to turn on and off the subwoofer.

SUBWOOFER indicator
Lights up when the subwoofer is on.

6
⏏ PUSH
Press to insert or eject a tape.

7
ERASE
Press to erase MP3 files and folders from the connected optional USB device (Digital music player or USB storage media).

8
Unit: PRESET EQ, GROOVE, SURROUND
Remote: EQ
Press to select the sound effect.

9
PLAY MODE/TUNING MODE (HCD-GT55 only)
Press to select the play mode of a CD, MP3 disc or an optional USB device (Digital music player or USB storage media).
Press to select the tuning mode.

EQ BAND (HCD-GT44/GT22 only)
Press to select the frequency band.

10
PHONES jack
Connect the headphones.

11
AUDIO INPUT L/R jacks
Connect to an audio component (Portable audio player, etc.).

12
⭠ (USB) port
Connect an optional USB device (Digital music player or USB storage media).

13
REC/ERASE indicator
Lights up when recording to the connected optional USB device (Digital music player or USB storage media), or when erasing MP3 files or folders.

14
MIC jack
Connect an optional microphone.

MIC LEVEL
Turn to adjust the microphone volume.

15
Unit: MASTER VOLUME
Turn to adjust the volume.

Remote: VOLUME +/–
Press to adjust the volume.

16
OPERATION DIAL
Turn to select a track, file or folder.

17
Unit: ►❚❚ (play/pause)
Remote: ► (play)
❚❚ (pause)
Press to start or pause playback.

■ (stop)
Press to stop playback.

⏮/⏭ (go back/go forward)
Press to select a track or file.

Unit: TUNING +/–
Remote: +/– (tuning)
Press to tune in the desired station.

🗀 +/– (select folder)
Press to select a folder.

◀◀/▶▶ (rewind/fast forward)
Press to find a point in a track or file.

18
CD-USB SYNC/REC1
Press to record from a disc onto the connected optional USB device (Digital music player or USB storage media).

CD-TAPE SYNC
TAPE REC PAUSE/START
Press to record onto a tape.

19
⏏ OPEN/CLOSE
Press to insert and eject a disc.

20
Unit: DISC 1 – 3
Press to select a disc. Press to switch to the CD function from other function.

Unit: DISC SKIP/EX-CHANGE
Press to select a disc. Press to exchange a disc while playing.

Remote: DISC SKIP
Press to select a disc.

21
RETURN
Press to return to the parent folder.
Press to exit search mode.

22
ENTER
Press to enter the settings.

23 (HCD-GT55 only)
ENTER
Press to enter the settings.

+/– (equalizer level)
Press to adjust the equalizer level.

24 (HCD-GT55 only)
BASS
Press to select low frequency. The indicator lights up when the button is pressed.

VOCAL
Press to select mid frequency. The indicator lights up when the button is pressed.

GUITAR
Press to select high frequency. The indicator lights up when the button is pressed.

FOCUS
Press to emphasize equalizer level of the selected band.

25
CLOCK/TIMER SELECT
CLOCK/TIMER SET
Press to set the clock and the timers.

26
REPEAT/FM MODE
Press to listen to a disc, an USB device, a single track or file repeatedly.
Press to select the FM reception mode (monaural or stereo).

27
Battery compartment lid

28
CLEAR
Press to delete a pre-programmed track or file.

29
TUNER MEMORY
Press to preset the radio station.

30
PLAY MODE/TUNING MODE
Press to select the play mode of a CD, MP3 disc or an optional USB device (Digital music player or USB storage media).
Press to select the tuning mode.

31
SLEEP
Press to set the Sleep Timer.

SECTION 3
DISASSEMBLY

- This set can be disassembled in the order shown below.

3-1. DISASSEMBLY FLOW

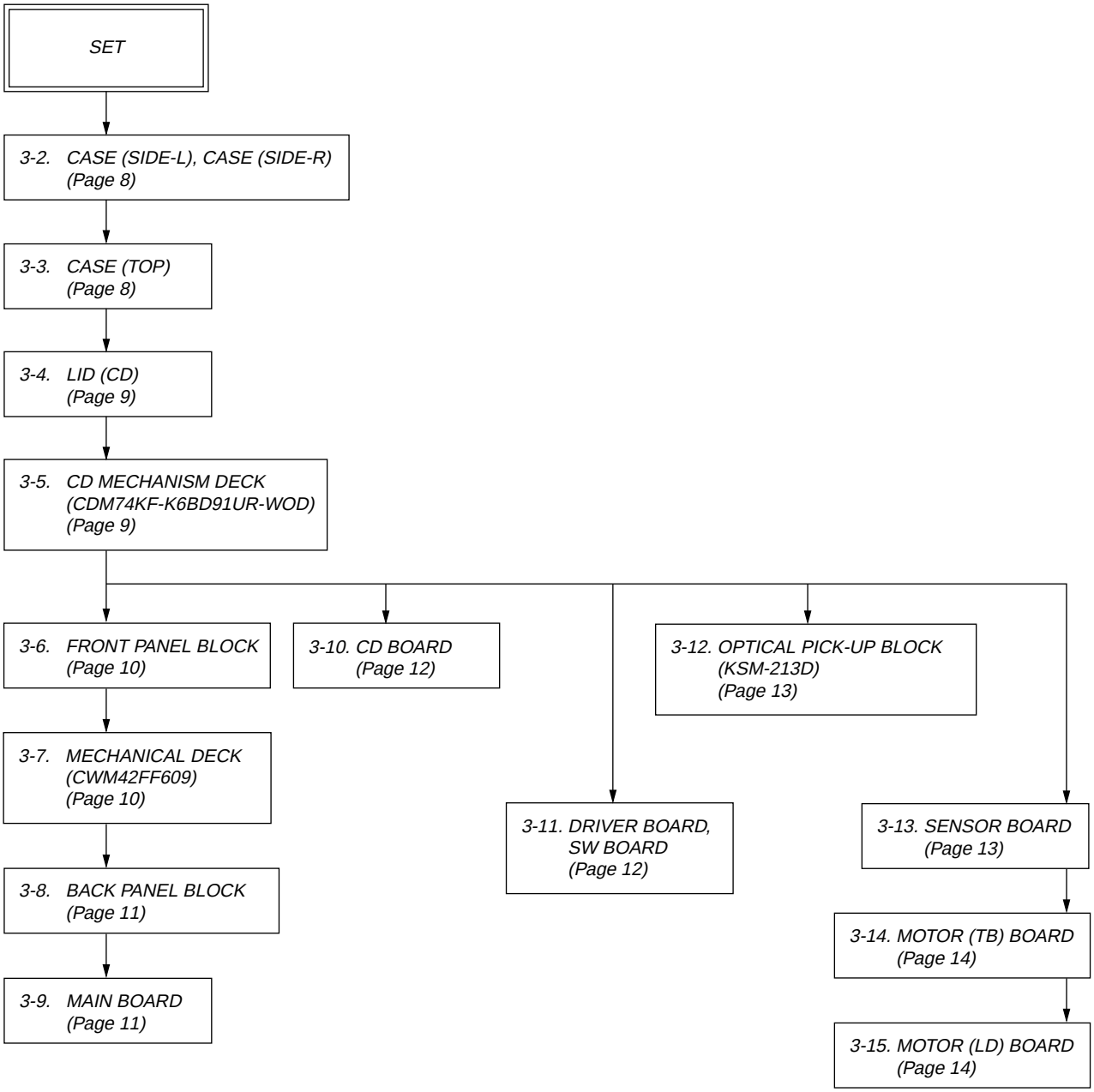

Note: Follow the disassembly procedure in the numerical order given.

3-2. CASE (SIDE-L), CASE (SIDE-R)

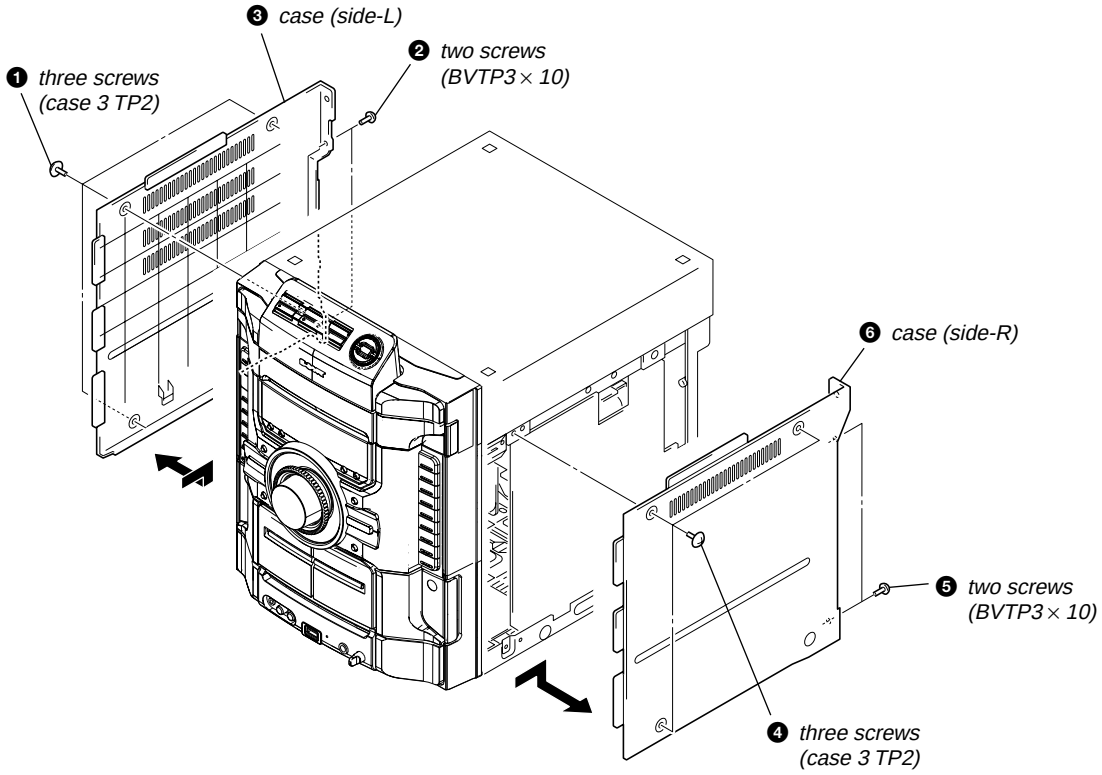

3-3. CASE (TOP)

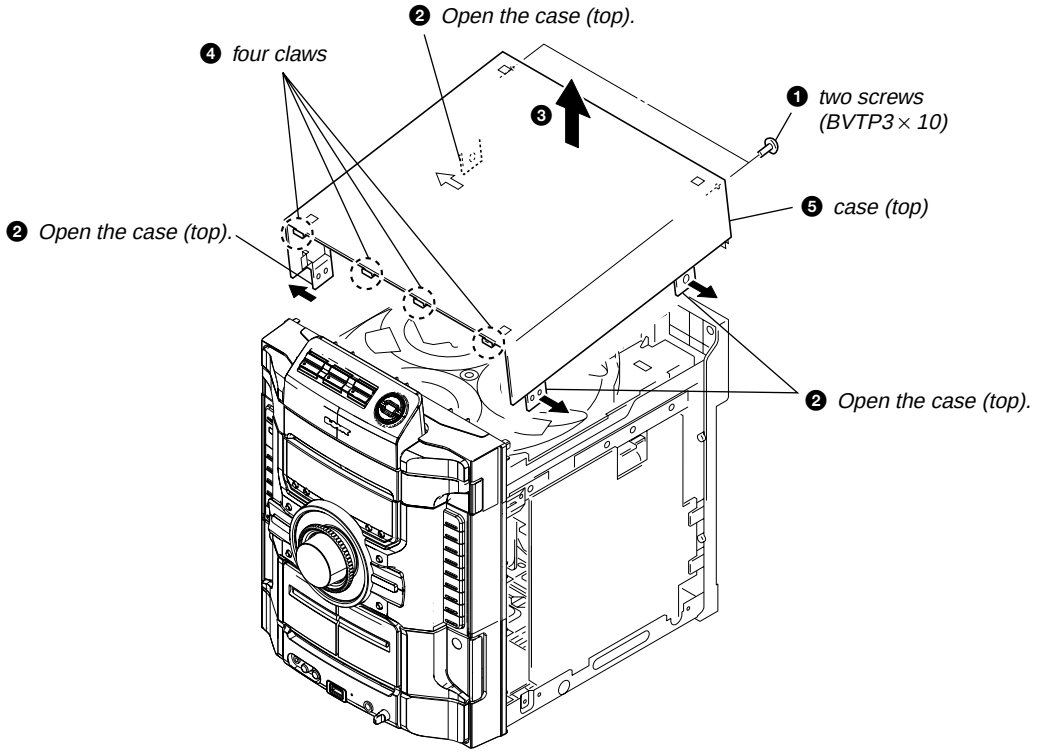

3-4. LID (CD)

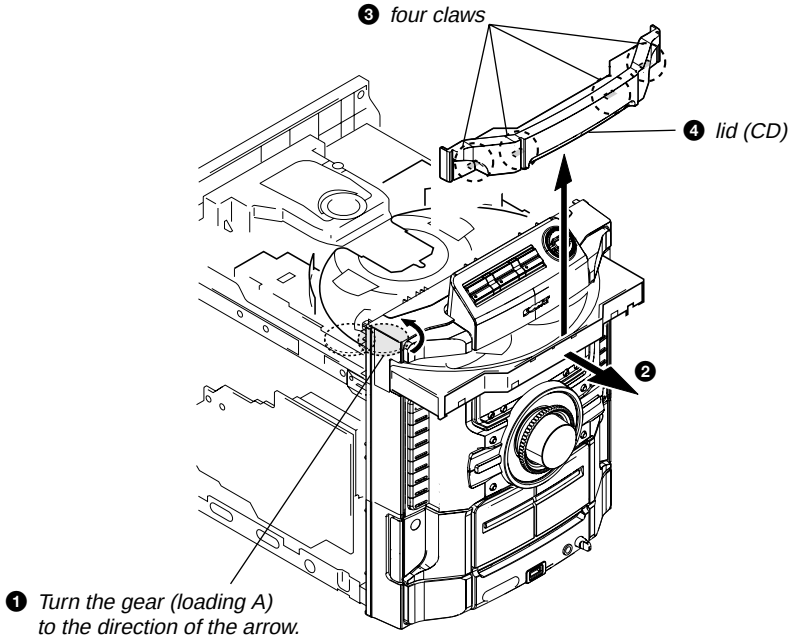

3-5. CD MECHANISM DECK (CDM74KF-K6BD91UR-WOD), USB BOARD

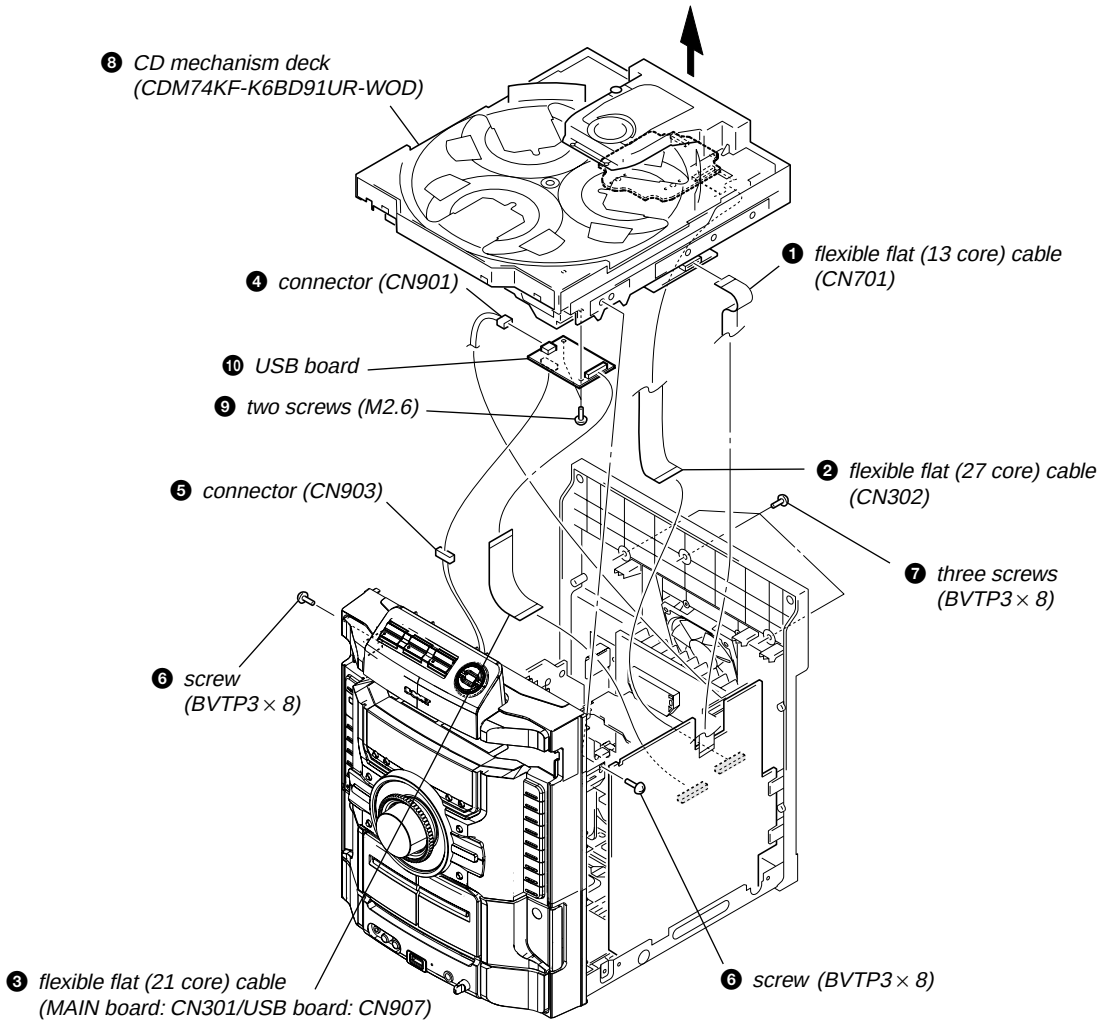

3-6. FRONT PANEL BLOCK

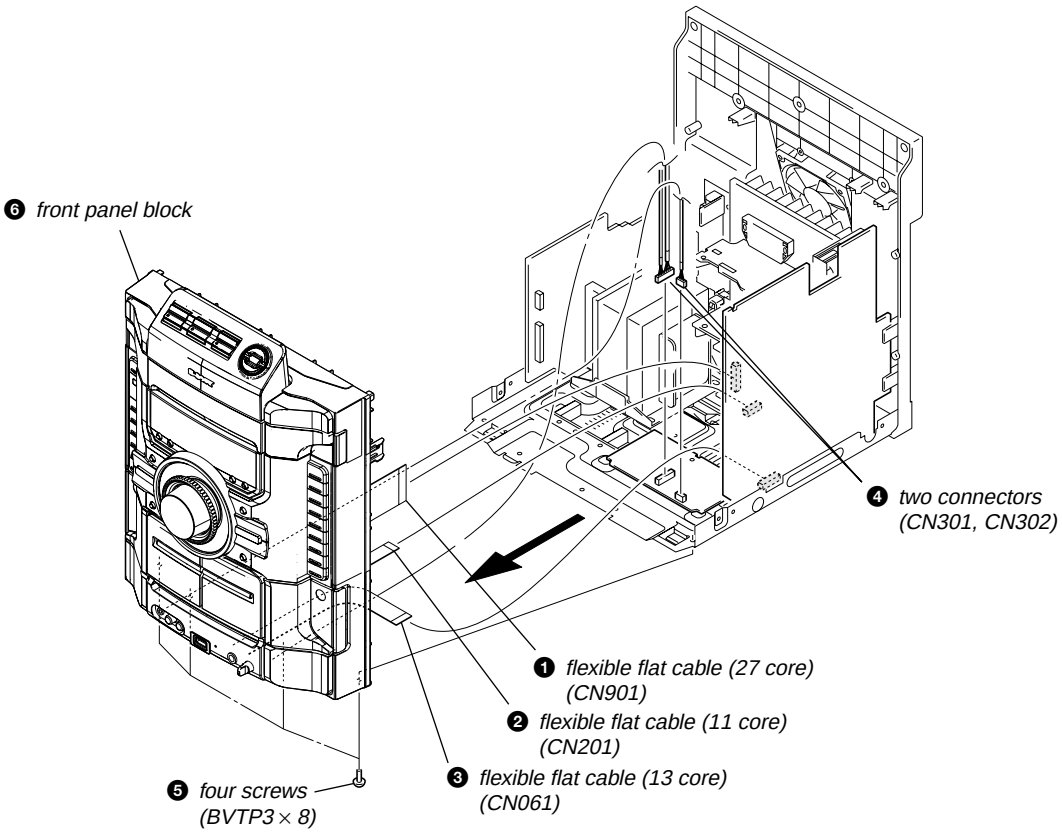

3-7. MECHA DECK (CWN42FF609)

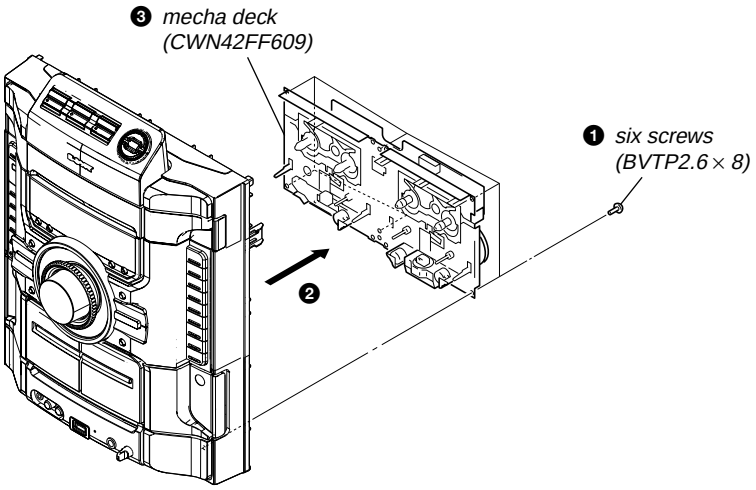

3-8. BACK PANEL BLOCK

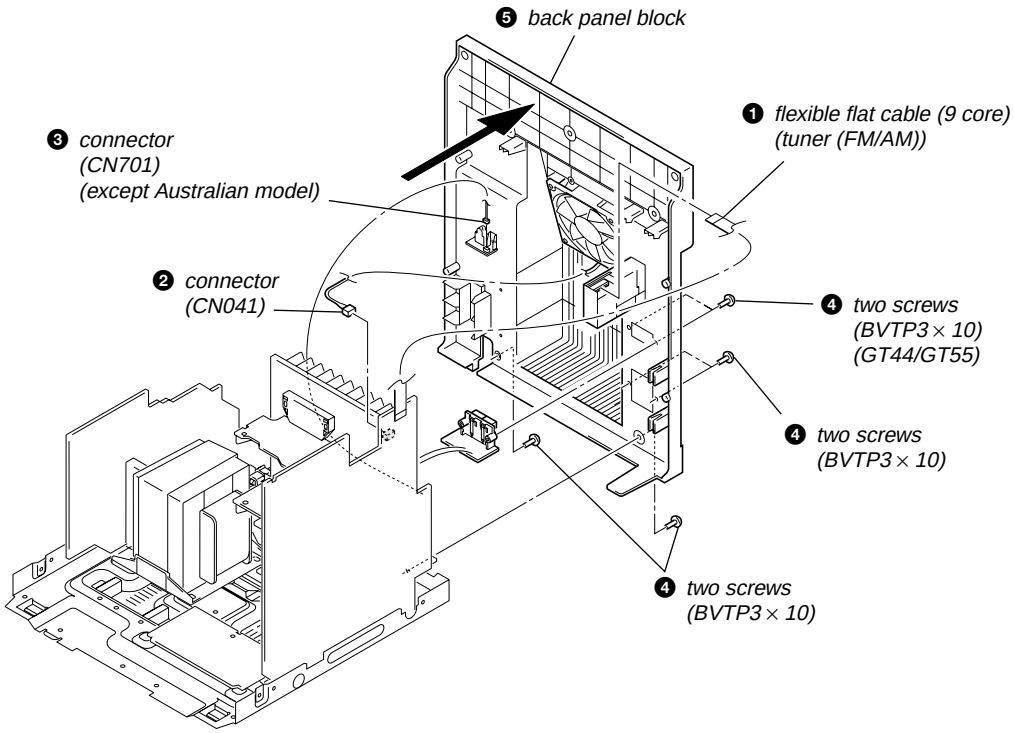

3-9. MAIN BOARD

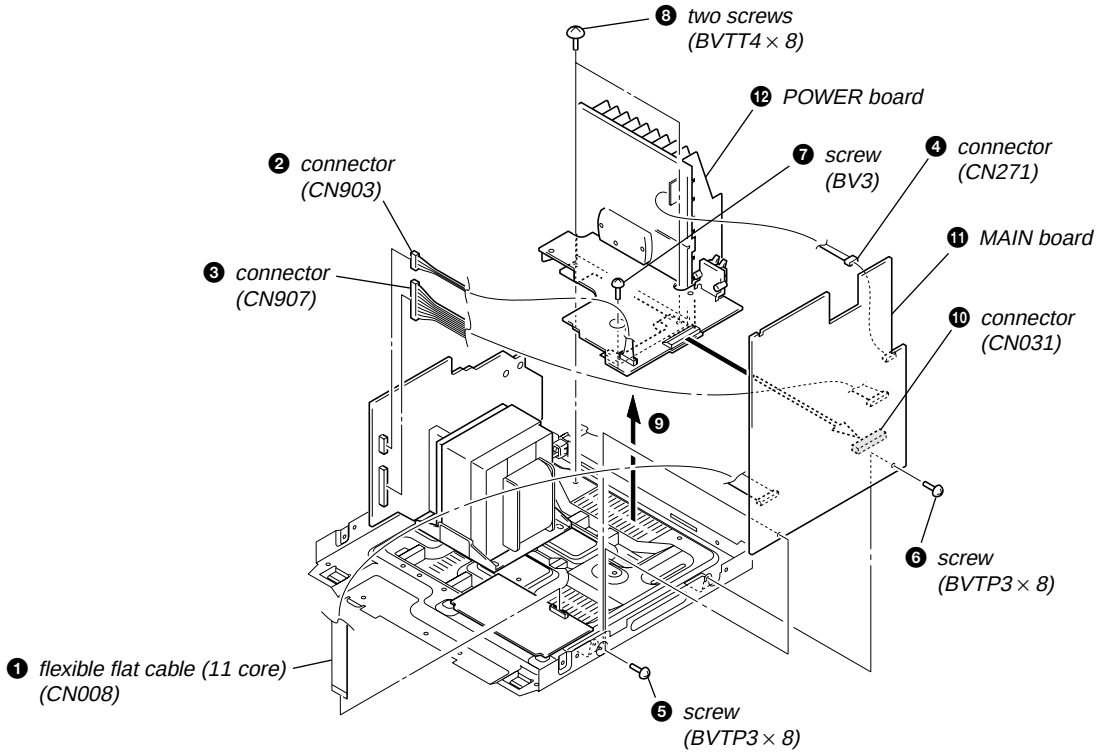

3-10. CD BOARD

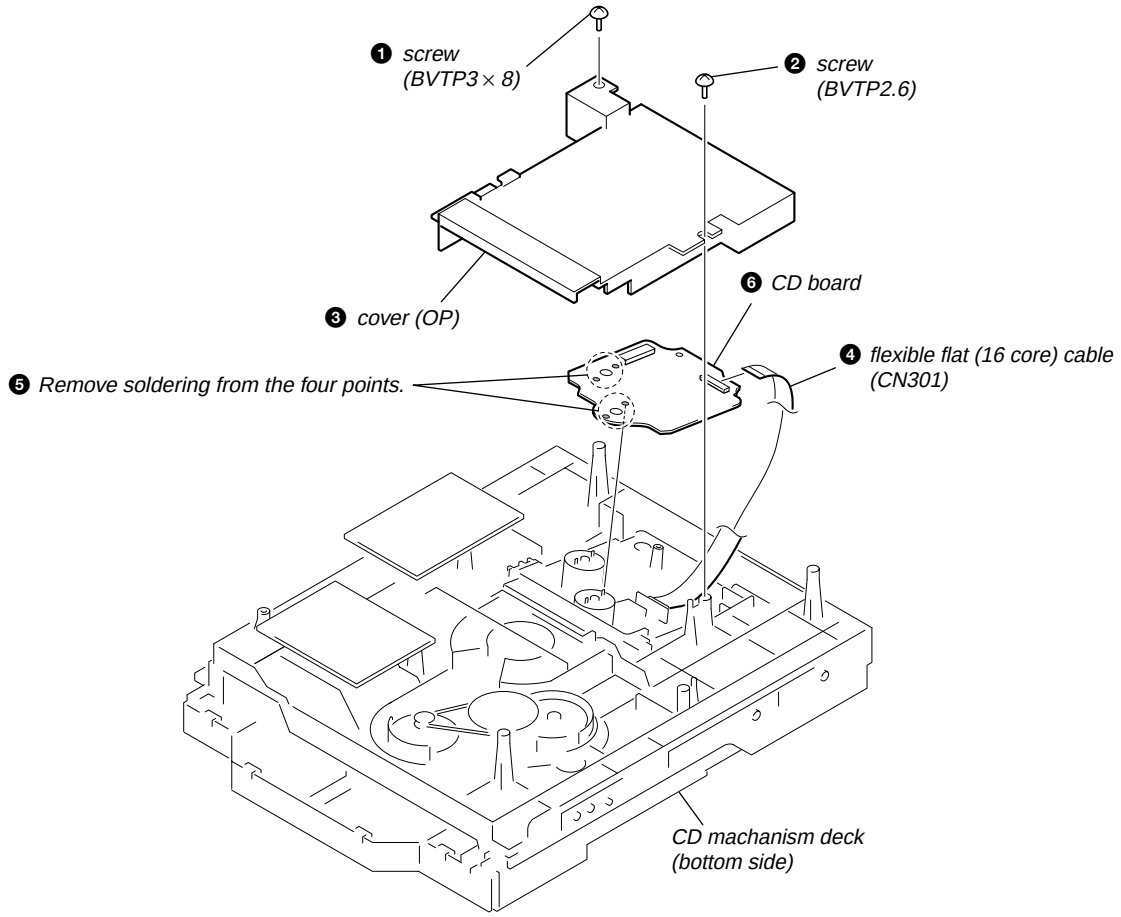

3-11. DRIVER BOARD, SW BOARD

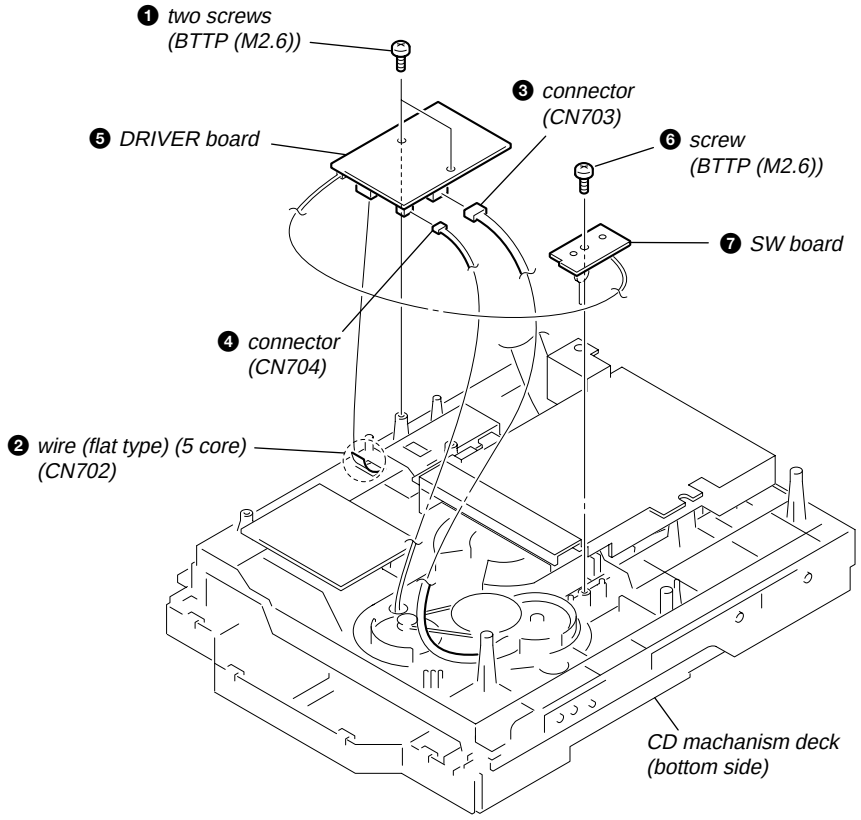

3-12. OPTICAL PICK-UP BLOCK (KSM-213D)

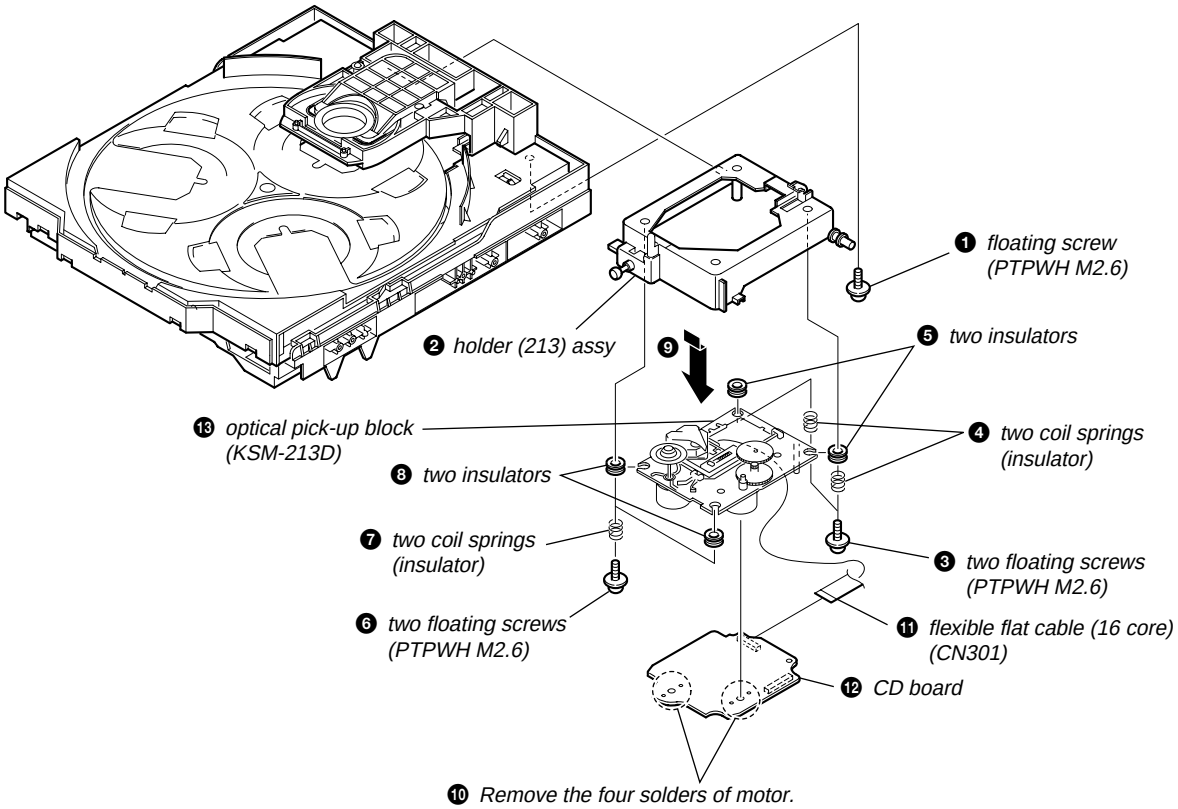

3-13. SENSOR BOARD

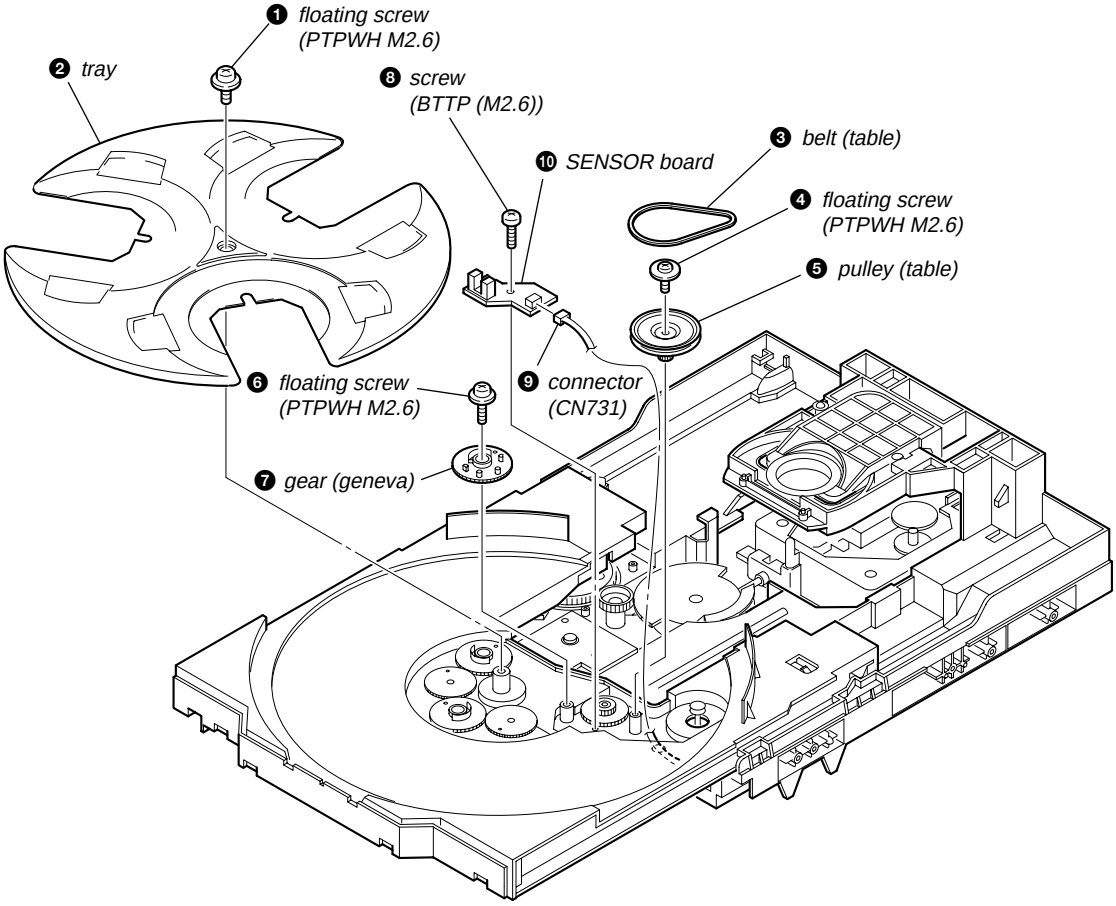

3-14. MOTOR (TB) BOARD

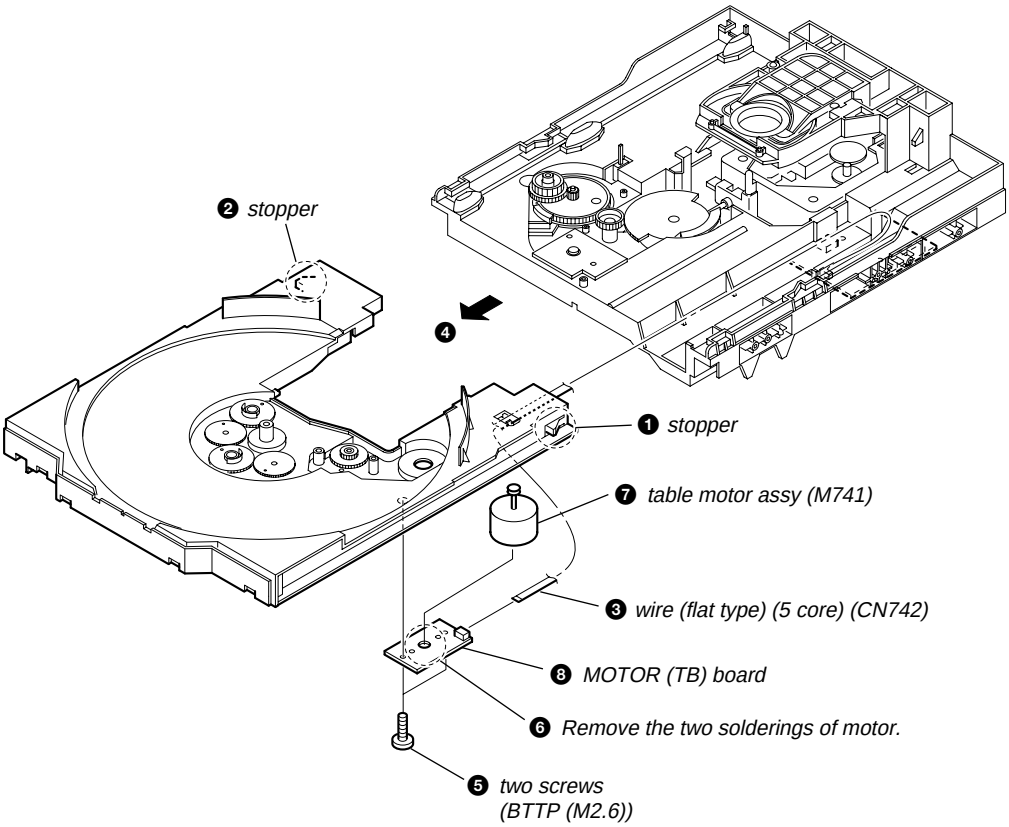

3-15. MOTOR (LD) BOARD

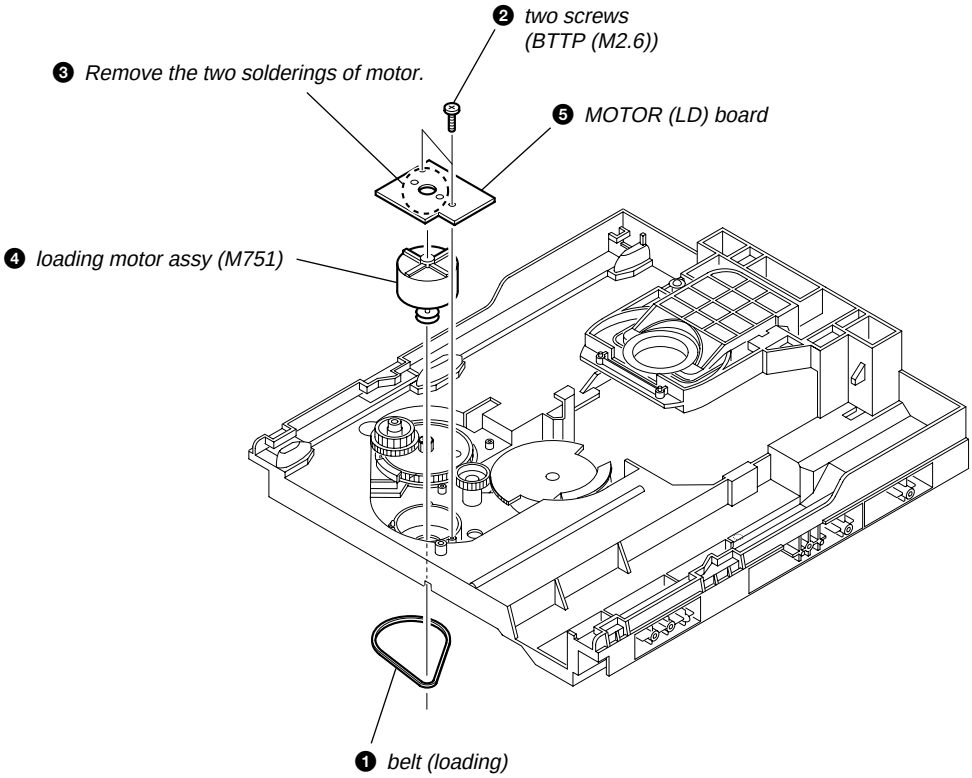

SECTION 4
TEST MODE

COLD RESET

The cold reset clears all data including preset data stored in the RAM to initial conditions. Execute this mode when returning the set to the customer.

Procedure:

1. Press three buttons of [■] , [▶II] and [GROOVE] simultaneously.
2. The message "COLD RESET" is displayed on the fluorescent indicator tube momentarily, then becomes standby states.

TUNING STEP CHANGE-OVER

A step of AM tuning interval can be changed over between 9 kHz and 10 kHz.

Procedure:

1. Press the [I/⏻] button to turn the power on.
2. Press the [TUNER/BAND] button to select "AM".
3. Press the [I/⏻] button to turn the power off.
4. Press two buttons of [TUNING +] and [I/⏻] simultaneously.
5. The message "AM 9K STEP" or "AM 10K STEP" is displayed on the fluorescent indicator tube, and thus the tuning interval is changed over.

CD SHIP (LOCK) MODE

This mode moves the optical pick-up to the position durable to vibration. Use this mode when returning the set to the customer after repair.

Procedure:

1. Press the [I/⏻] button to turn the power on.
2. Press the [CD] button to select "CD".
3. Press two buttons of [▶II] and [I/⏻] simultaneously.
4. The message "LOCK" is displayed on the fluorescent indicator tube, and the CD ship mode is set.

CD SHIP (LOCK) MODE & COLD RESET

This mode is used to perform CD ship (lock) mode and cold reset simultaneously.

Procedure:

1. Press the [I/⏻] button to turn the power on.
2. Press the [CD] button to select "CD".
3. Press three buttons of [■] , [ILLUMINATION] and [I/⏻] simultaneously.
4. The message "COLD RESET" is displayed on the fluorescent indicator tube momentarily, then becomes standby states.

ANTITHEFT LOCK MODE

This mode is used to unable to take sample disc out of disc table in the shop.

Procedure:

1. Press the [I/⏻] button to turn the power on.
2. Press the [CD] button to select "CD".
3. Insert a disc.
4. Press two buttons of [■] and [⏏] for 5 seconds.
5. The message "LOCKED" is displayed on the fluorescent indicator tube and the disc table is locked. (Even if pressing the [⏏] button, the message "LOCKED" is displayed on the fluorescent indicator tube and the disc table is locked)
6. To release this mode, press two buttons of [■] and [⏏] for 5 seconds.
7. The message "UNLOCKED" is displayed on the fluorescent indicator tube and the disc table is unlocked.

AMP TEST MODE

This mode is used to display the parameter of amplifier IC and display the VACS status.

Procedure:

1. Press the [I/⏻] button to turn the power on.
2. Press three buttons of [■] , [▶II] and [USB] simultaneously.
3. When the AMP test mode is activated, the message "AMP TEST IN" is displayed on the fluorescent indicator tube momentarily, then amplifier adjustment mode is displayed on the fluorescent indicator tube.
4. Press the [TAPE REC PAUSE/START] button to changed over between VACS status display mode and the amplifier IC parameter display mode.
5. In this mode, press the [GROOVE] button to changed over DBFB on/off, and "DBFB ON" or "DBFB OFF" is displayed on the fluorescent indicator tube.
6. In this mode, press the [SURROUND] button to changed over surround on/off, and "SURROUND ON" or "SURROUND OFF" is displayed on the fluorescent indicator tube.

– For GT22/GT44 –

7. In this mode, press the [EQ BAND] button to enter the equalizer adjustment mode.
   In the equalizer adjustment mode, press the [EQ BAND] button to change over the adjustment band as LOW/MID/HIGH. And turn the [OPERATION DIAL] knob to adjust the equalizer level of each bands.

– For GT55 –

7. In this mode, press the [BASS], [VOCAL] or [GUITAR] button to enter the parametric equalizer adjustment mode.
   In the parametric equalizer adjustment mode, press the [BASS], [VOCAL] and [GUITAR] button to change over the adjustment band. And press the [BASS], [VOCAL] or [GUITAR] button to change over the equalizer frequency of each bands, or press the [+] and [–] buttons to adjust the equalizer level of each bands.
8. To release the amplifier IC parameter display mode or equalizer adjustment mode, press the [I/⏻] button to the power off.

MC TEST MODE

This mode is used to check operations of microprocessor.

Procedure:

1. Press the [I/⏻] button to turn the power on.
2. Press three buttons of [■] , [▶II] and [AUDIO] simultaneously.
3. When the MC test mode is activated, VACS level is displayed on the fluorescent indicator tube momentarily.
4. Press the [TUNING +] button, the message "ALL EQ MAX" is displayed on the fluorescent indicator tube momentarily and press the [TUNING –] button, the message "ALL EQ MIN" is displayed on the fluorescent indicator tube momentarily.
5. Press the [ENTER] button, the message "ALL EQ FLAT" is displayed on the fluorescent indicator tube momentarily.
6. Turn the [VOLUME] knob clockwise, the message "VOLUME MAX" is displayed on the fluorescent indicator tube momentarily and turn the [VOLUME] knob counterclockwise, the message "VOLUME MIN" is displayed on the fluorescent indicator tube momentarily.
7. Press the [TAPE REC PAUSE/START] button to changed over VACS on/off.
8. Press the [I/⏻] button to release from this mode, then cold reset is performed.

VERSION DISPLAY MODE

This mode is used to check the model, destination and software version.

Procedure:

1. Press the [I/⏻] button to turn the power on.
2. Press three buttons of [■], [►II] and [ILLUMINATION] simultaneously.
3. When this mode is activated, model type and destination (*1) are displayed on the fluorescent indicator tube.

*1) GRL2H : HCD-GT22
GRL2HS : HCD-GT44
GRL3HS : HCD-GT55

Example: GRL3HS_LATIN: Latin American models of HCD-GT55

4. Press the [TAPE REC PAUSE/START] button to display the software version (*2) and year, month, day of the software creation.

*2) G**.*** : The version of system controller (IC901 on the MAIN board).
M**.*** : The version of USB control module in the sysytem controller.
U**.*** : The version of USB controller (IC901 on the USB board).

5. To release this mode, press three buttons of [■], [►II] and [ILLUMINATIOM] simultaneously.

CD ERROR CODE DISPLAY MODE

This mode can be used for error code display of CD section.

Procedure:

1. Press the [I/⏻] button to turn the power on.
2. Press the [CD] button to select "CD".
3. Press three buttons of [■], [CD] and [SURROUND] simultaneously.
4. When this mode is activated, mechanism deck error code is displayed on the fluorescent indicator tube.
5. Press the [ENTER] button to changed over between optical pick-up error code display mode and mechanism deck error code mode.

Note: There are two [ENTER] buttons on the HCD-GT55, but it works in the same way whichever button is pressed.

6. Press the [TUNING +]/[TUNING –] button to change over display of error history number.
7. To release this mode, press the [I/⏻] button to turn the power off.

1. Mechanism Deck Error Code Mode

When this mode is entered, mechanism deck error code is displayed with the 10-character format on the fluorescent indicator tube.

The first digit from the left indicates:

The first digit from the left indicates which mode the error history is. In the mechanism deck error code mode, "M" is displayed on the fluorescent indicator tube.

The second digit from the left indicates:

(Error history number display)

The second digit from the left indicates which order the error history is. "0" indicates the latest error history, and each time the number increases by one, the error history goes back to one-previous error.

The third and 4th digit from the left indicates:
(Error status display)

The third and 4th digit from the left indicates which error status is indicated.

Display	Status
0 0	No error
0 8	Table operation time-out (Table does not move to the target position within the specified time)
1 6	In the chucking down operation, the operation was retried by the maximum number of times but the operation could not be completed
1 7	In the chucking up and down operation, the reverse recovery processing was attempted but it could not be recovered
1 8	In the chucking up operation, the operation was retried by the maximum number of times but the operation could not be completed
2 0	Loading operation time-out (Table does not move to the target position within the specified time)
2 2	As the chuck was in the ex-open status at the initialization, the closing was attempted but could not be completed

The 5th and 6th digit from the left indicates:
(Present status display)

The 5th and 6th digit from the left indicates which operating status when an error occurred is indicated.

Display	Status
0 1	Open completion status
0 2	From open status, the movement to chucking down position is under way
0 3	From chucking down position, the open operation is under way
0 4	Chucking down completion status
1 0	The chucking down operation is under way
1 1	The chucking up operation is under way
1 2	Close completion status
1 3	From close status, the ex-open operation is under way
1 4	From ex-open status, the close operation is under way
1 8	Ex-pen completion status

The 7th and 8th digit from the left indicates:
(Motor status display)

The 7th and 8th digit from the left indicates which motor output status when an error occurred is indicated.

Display	Status
× 0	No table motor output
× 1	Table motor forward output
× 2	Table motor backward output
× 3	Table motor break output
0 ×	No loading motor output
1 ×	Loading motor forward output
2 ×	Loading motor backward output
3 ×	Loading motor break output

The 9th and 10 th digit from the left indicates:
(Tray status display)
The 9th and 10th digit from the left indicates which target processing when an error occurred is indicated.

Display	Status
0 1	Open operation
1 2	Close operation
1 8	Ex-open operation

2. Optical Pick-up Error Code Mode

When this mode is entered, optical pick-up error code is displayed with the 8-character format on the fluorescent indicator tube.

The first digit from the left indicates:
The first digit from the left indicates which mode the error history is. In the optical pick-up error code mode, “D” is displayed on the fluorescent indicator tube.

The second digit from the left indicates:
(Error history No. display)
The second digit from the left indicates which order the error history is. “0” indicates the latest error history, and each time the number increases by one, the error history goes back to one-previous error.

The third and 4th digit from the left indicates:
(Error status display)
The third and 4th digit from the left indicates which error status is indicated.

Display	Status
0 1	Not focused (TOC read without a disc)
0 2	GFS NG (TOC read with a disc chucked)
0 3	Start operation time-over
0 4	Defocused continuously (Defocused during TOC reading)
0 5	Q code not entered for specified time
0 6	Tracking not turned ON
0 7	Blank disc (Blank disc TOC read)

The 5th and 6th digit from the left indicates:
(Error step display)
The 5th and 6th digit from the left indicates which processing when a trouble occurred

Display	Contents
0 1	Power OFF in progress
0 2	Initialize in progress
0 3	Oscillation stopping
0 4	From oscillation stop, oscillation starting
0 5	Stopping
0 6	Stop operation is under way
0 7	Start operation in progress
0 8	TOC read in progress
0 9	Search operation is under way
0 A	Playback operation is under way
0 B	Pause operation is under way
0 C	Playback manual search operation is under way
0 D	Pause manual search operation is under way
0 E	—

The 7th and 8th digit from the left indicates:
The 7th and 8th digit from the left indicates which operation in progress when a trouble occurred. (Step of each processing of the 5th and 6th digits is indicated)

5 REPEAT LIMIT CANCEL MODE

Number of repeat for CD playback is 5 times when the repeat mode is “REPEAT”. This mode is used to enables CD to repeat playback for limitless times.

Procedure:

1. Press the [I/⏻] button to turn the power on.
2. Press the [CD] button to select “CD”.
3. Press three buttons of [■] , [CD] and [▶II] simultaneously.
4. The message “LIMIT OFF” is displayed on the fluorescent indicator tube momentarily, CD repeat 5 limit is cancelled.

CD/USB POWER MANAGE

This mode is used to changed over CD and USB power on/off for decreasing of reception noise in the tuner mode.

Procedure:

1. Press the [I/⏻] button to turn the power on.
2. Press the [CD] button to select “CD”.
3. Press the [I/⏻] button to turn the power off.
4. Press two buttons of [■] and [I/⏻] simultaneously.
5. The message “CD POWER ON” or “CD POWER OFF” is displayed on the fluorescent indicator tube, and CD and USB power on/off changed over in the tuner mode.

BOOSTER ON/OFF

This mode is used to changed over MP3 booster on/off.

Procedure:

1. Press the [I/⏻] button to turn the power on.
2. Press the [USB] button to select “USB”.
3. Press three buttons of [■] , [SURROUND] and [USB] simultaneously.
4. The message “BOOSTER ON” or “BOOSTER OFF” is displayed on the fluorescent indicator tube, and MP3 booster on/off changed over.

EXCITER ON/OFF

This mode is used to changed over the exciter on/off.

Procedure:

1. Press the [I/⏻] button to turn the power on.
2. Press the [CD] button to select “CD”.
3. Insert a MP3 disc.
4. Press three buttons of [■] ,[SURROUND] and [AUDIO] simultaneously.
5. The message “EXCITER ON” or “EXCITER OFF” is displayed on the fluorescent indicator tube, and the exciter on/off changed over.

CD SERVICE MODE

This mode can run the CD sled motor freely. Use this mode, for instance, when cleaning the optical pick-up.

Procedure:

1. Press the [I/⏻] button to turn the power on.
2. Press the [CD] button to select “CD”.
3. Press three buttons of [■] , [FOLDER –] and [SURROUND] simultaneously, the message “SERVICE” is displayed on the fluorescent indicator tube.
4. Press the [TUNING –] button to move the optical pick-up to inside track and the message “SLED IN” is displayed on the fluorescent indicator tude, or press the [TUNING +] button to outside track and the message “SLED OUT” is displayed on the fluorescent indicator tude.
5. Press the [DISPLAY] button, “LD ON” or “LD OFF” is displayed on the fluorescent indicator tude. Each time [DISPLAY] button is pressed, laser diode on/off is changed over.
6. To release this mode, press three buttons of [■], [FOLDER –] and [SURROUND].

PANEL TEST MODE

This mode is used to check the fluorescent indicator tube, LEDs, phones jack, keys and control knobs.

Procedure:

1. Press the I/⏻ button to turn the power on.
2. Press three buttons of ■ , SURROUND and TUNER simultaneously.
3. All segments on the fluorescent indicator tube and all LEDs light up.
4. Press two buttons of ILLUMINATUION and ENTER simultaneously to enter the key routes check mode.
5. In this mode, each time any button is pressed, it displays key route and key number of the button. (Refer to following table)

Key No.	Key Routes				
	KEY0	KEY1	KEY2	KEY3	KEY4 (GT55 only)
1	DISPLAY	ILLUMINATION	ENTER	DISC 1	+
2	POWER	ERASE	RETURN	DISC 2	ENTER(PEQ)
3	CD	PRESET EQ	FOLDER +	DISC 3	–
4	TUNER/BAND	GROOVE	TUNING +	EX-CHANGE/ DISC SKIP	GUITAR
5	TAPE A/B	SURROUND	PLAY/PAUSE	STOP	FOCUS (GUITAR)
6	AUDIO	EQ BAND (GT22/GT44) PLAY MODE (GT55)	TUNING –	CD-USB SYNC/REC1	FOCUS (VOCAL)
7	USB		FOLDER –	CD-TAPE SYNC	VOCAL
8	SUBWOOFER (GT44/GT55)		OPEN/CLOSE	TAPE REC PAUSE/START	BASS
9					FOCUS (BASS)

Example: DISPLAY button : “KEY 10000”
TUNER/BAND button : “KEY 40000”
ILLUMINATION button : “KEY 01000”
CD-TAPE SYNC button : “KEY 00070”

6. Press two buttons of ILLUMINATUION and ENTER simultaneously to enter the key check mode.
7. In this mode, each time any button is pressed, “KEYCONT” value increases. However, once a button is pressed, it is no longer taken into account. (Maximum numbers are GT22: 29, GT44: 30, GT55: 39)
8. Press two buttons of ILLUMINATUION and ENTER simultaneously to enter the phones jack check mode.
9. In this mode, “H_P ON” is displayed when phones jack is inserted, and “H_P OFF” is displayed when phones jack is pulled out.
10. Press two buttons of ILLUMINATUION and ENTER simultaneously to enter the volume check mode and display “VOLUME FLAT”.
11. In this mode, “VOLUME UP” is displayed when VOLUME knob is turned clockwise, and “VOLUME DOWN” is displayed when VOLUME knob is turned counterclockwise.
12. Press two buttons of ILLUMINATUION and ENTER simultaneously to enter the jog check mode and display “JOG FLAT”.
13. In this mode, “JOG UP” is displayed when OPERATION DIAL knob is turned clockwise, and “JOG DOWN” is displayed when OPERATION DIAL knob is turned counterclockwise.
14. Press two buttons of ILLUMINATUION and ENTER simultaneously to release the Panel Test mode.

SECTION 5
MECHANICAL ADJUSTMENTS

PRECAUTION

1. Clean the following parts with a denatured-alcohol-moistened swab :

record/playback head	pinch roller
erase head	rubber belts
capstan	idlers

2. Demagnetize the record/playback head with a head demagnetizer. (Do not bring the head magnetizer close to the erase head.)
3. Do not use a magnetized screwdriver for the adjustments.
4. After the adjustments, appiy suitable locking compound to the parts adjusted.
5. The adjustments should be performed with the rated power supply voltage unless otherwise noted.

TORQUE MEASUREMENT

Mode	Torque Meter	Meter Reading
FWD	CQ-102C	2.6 – 6.9 mN·m (30 – 70 g·cm) (0.41 – 0.97 oz·inch)
FWD Back Tension	CQ-102C	0.15 – 0.59 mN·m (1.5 – 6.0 g·cm) (0.021 – 0.083 oz·inch)
FF/REW	CQ-201B	5.4 – 16.7 mN·m 55 – 170 g·cm) 0.76 – 2.35 oz·inch)

TAPE TENSION MEASUREMENT

Mode	Tension Meter	Meter Reading
FWD	CQ-403A	more than 100 g (more than 3.53 oz)

SECTION 6
ELECTRICAL ADJUSTMENTS

DECK SECTION | 0 dB=0.775 V

1. Demagnetize the record/playback head with a head demagnetizer.
2. Do not use a magnetized screwdriver for the adjustments.
3. After the adjustments, apply suitable locking compound to the parts adjust.

TEST TAPE

Tape	Signal	Used for
P-4-A063	6.3 kHz, -10 dB	Azimuth Adjustment

RECORD/PLAYBACK HEAD AZIMUTH ADJUSTMENT

Note: Perform this adjustment for both decks.

Procedure:

1. Mode: Playback

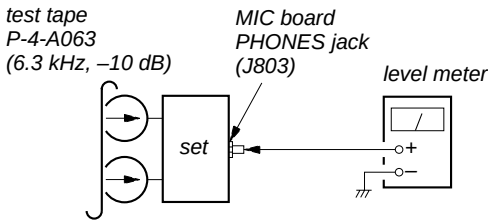

2. Turn the adjustment screw and check output peaks. If the peaks do not match for L-CH and R-CH, turn the adjustment screw so that outputs match within 1dB of peak.

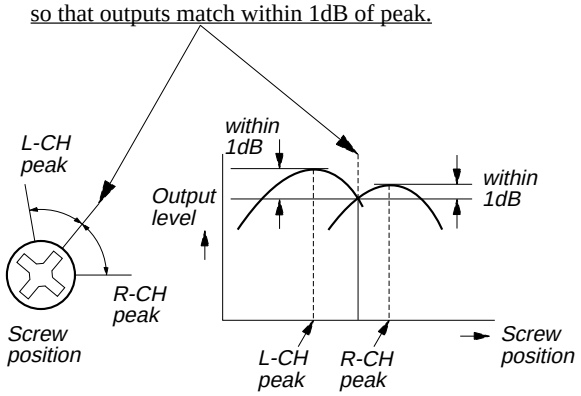

3. Mode: Playback

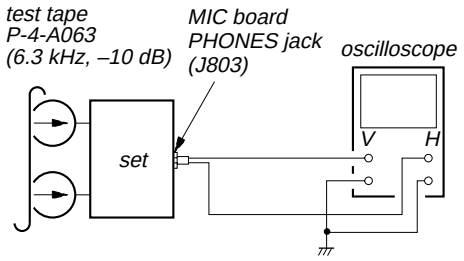

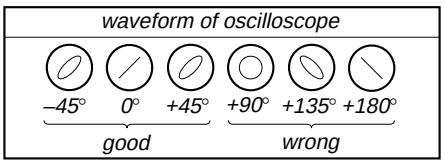

4. After the adjustments, apply suitable locking compound to the pats adjusted.

Adjustment Location: Playback Head (DECK-A)
Record/Playback/Erase Head (DECK-B)

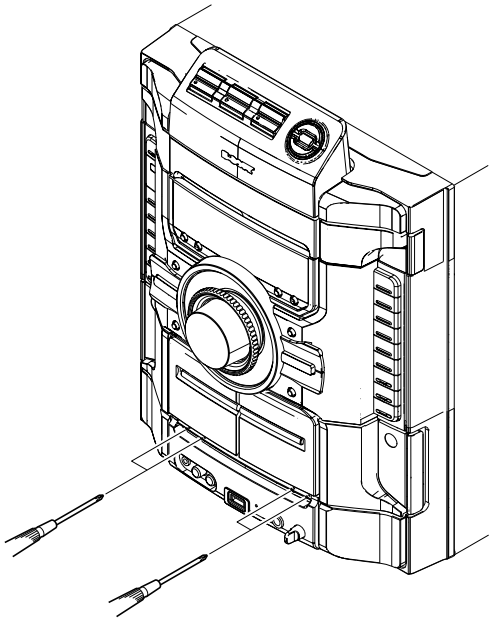

TUNER SECTION

FM TUNE LEVEL CHECK

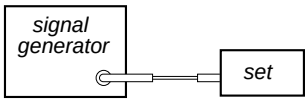

Procedure:

1. Turn on the set.
2. Input the following signal from signal generator to FM antenna input directly.

   Carrier frequency: A = 87.5 MHz, B = 98 MHz, C = 108 MHz

   Deviation : 75 kHz
   Modulation : 1 kHz
   ANT input : 35 dBu (EMF)

Note: Use 75 ohm coaxial cable to connect signal generator and the set.
You cannot use video cable for checking.
Use signal generator whose output impedance is 75 ohm.

3. Set to FM tuner function and tune A, B and C signals.
4. Confirm "TUNED" is lit on the display for A, B and C signals.

When the selected station signal is received in good condition, "TUNED" is displayed.

CD SECTION

Note:

1. CD Block is basically constructed to operate without adjustment.
2. Use YEDS-18 disc (3-702-101-01) unless otherwise indicated.
3. Use an oscilloscope with more than 10 MΩ impedance.
4. Clean the object lens by an applicator with neutral detergent when the signal level is low than specified value with the following checks.
5. Check the focus bias check when optical pick-up block is replaced.

FOCUS BIAS CHECK

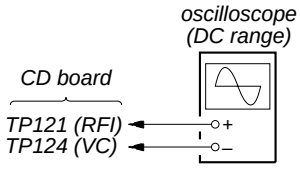

Procedure :

1. Connect oscilloscope to TP121 (RFI) and TP124 (VC) on the CD board.
2. Press the I/⏻ button to turn the power ON.
3. Set disc (YEDS-18) on the tray and press the ▶II button to playback.
4. Confirm that oscilloscope waveform is as shown in the figure below. (eye pattern)
   A good eye pattern means that the diamond shape (◊) in the center of the waveform can be clearly distinguished.

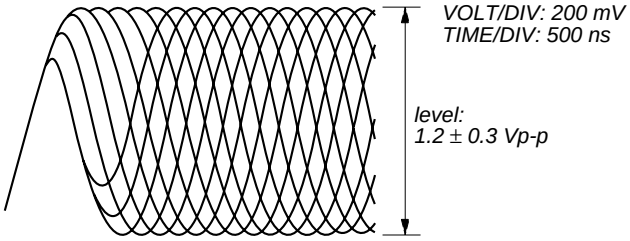

Checking Location:

– CD Board (Conductor Side) –

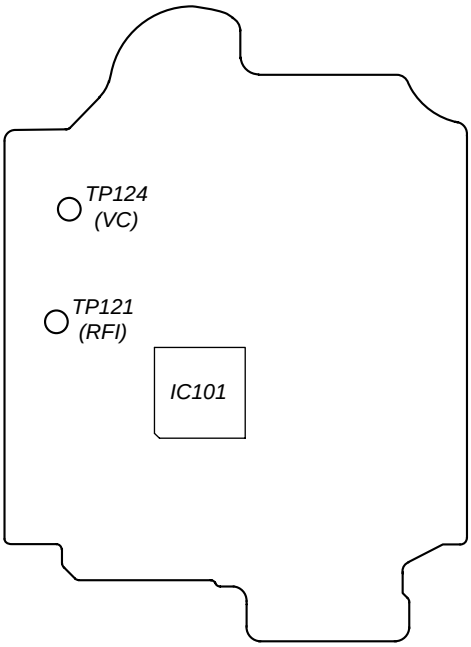

MEMO

SECTION 7
DIAGRAMS

7-1. BLOCK DIAGRAM – CD SERVO, USB Section –

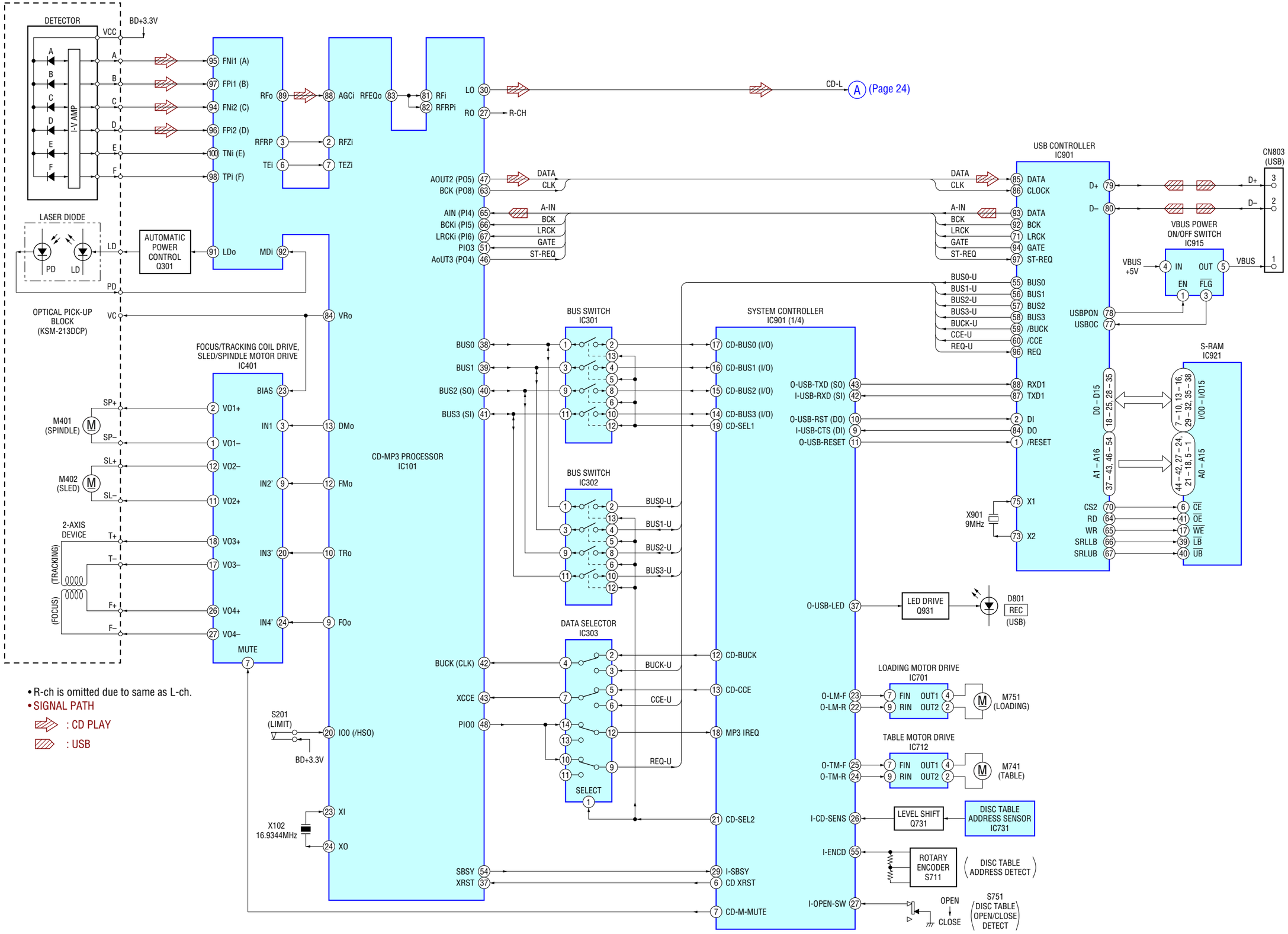

• R-ch is omitted due to same as L-ch.
• SIGNAL PATH
: CD PLAY
: USB

7-2. BLOCK DIAGRAM – MAIN Section –

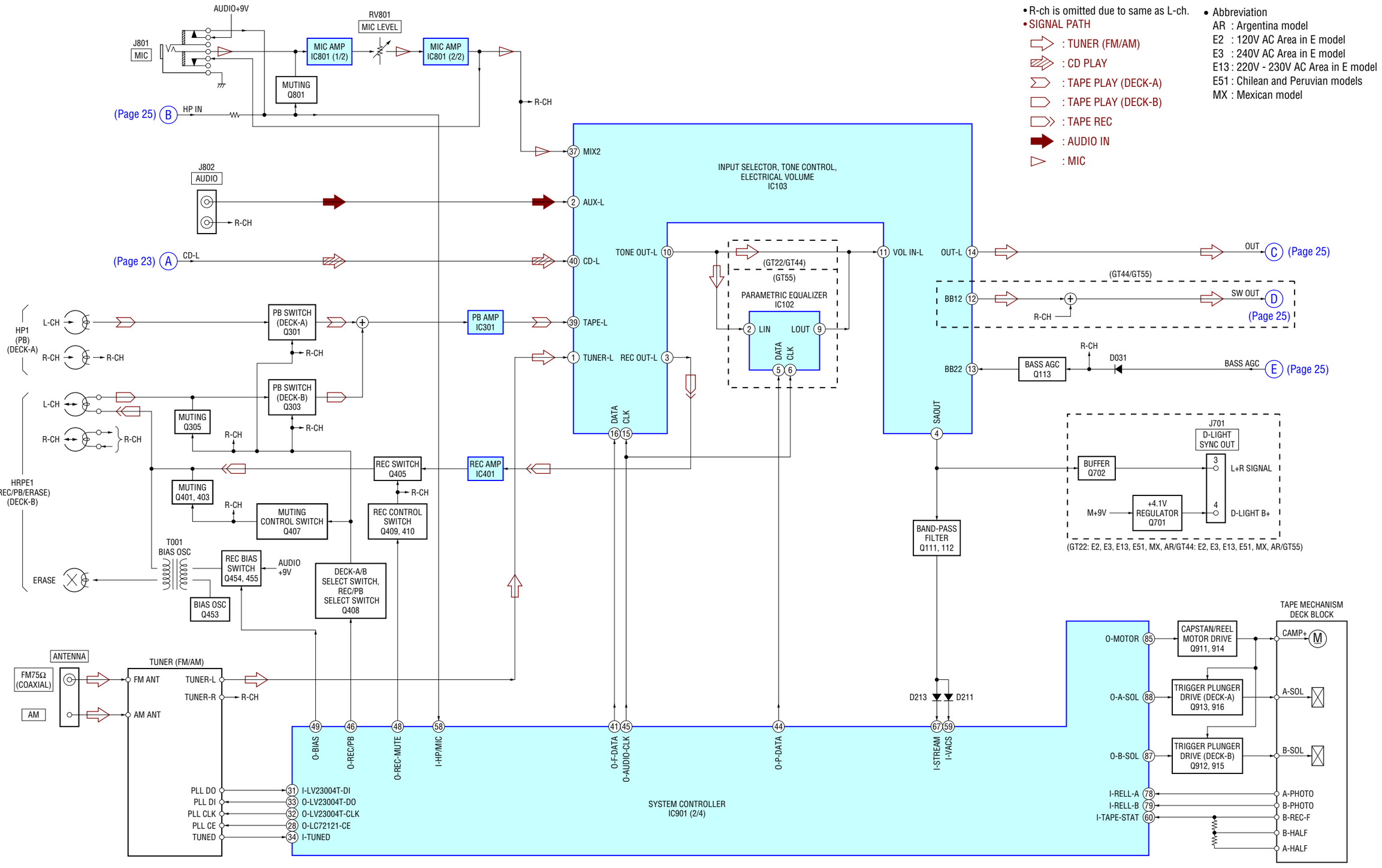

7-3. BLOCK DIAGRAM – AMP Section –

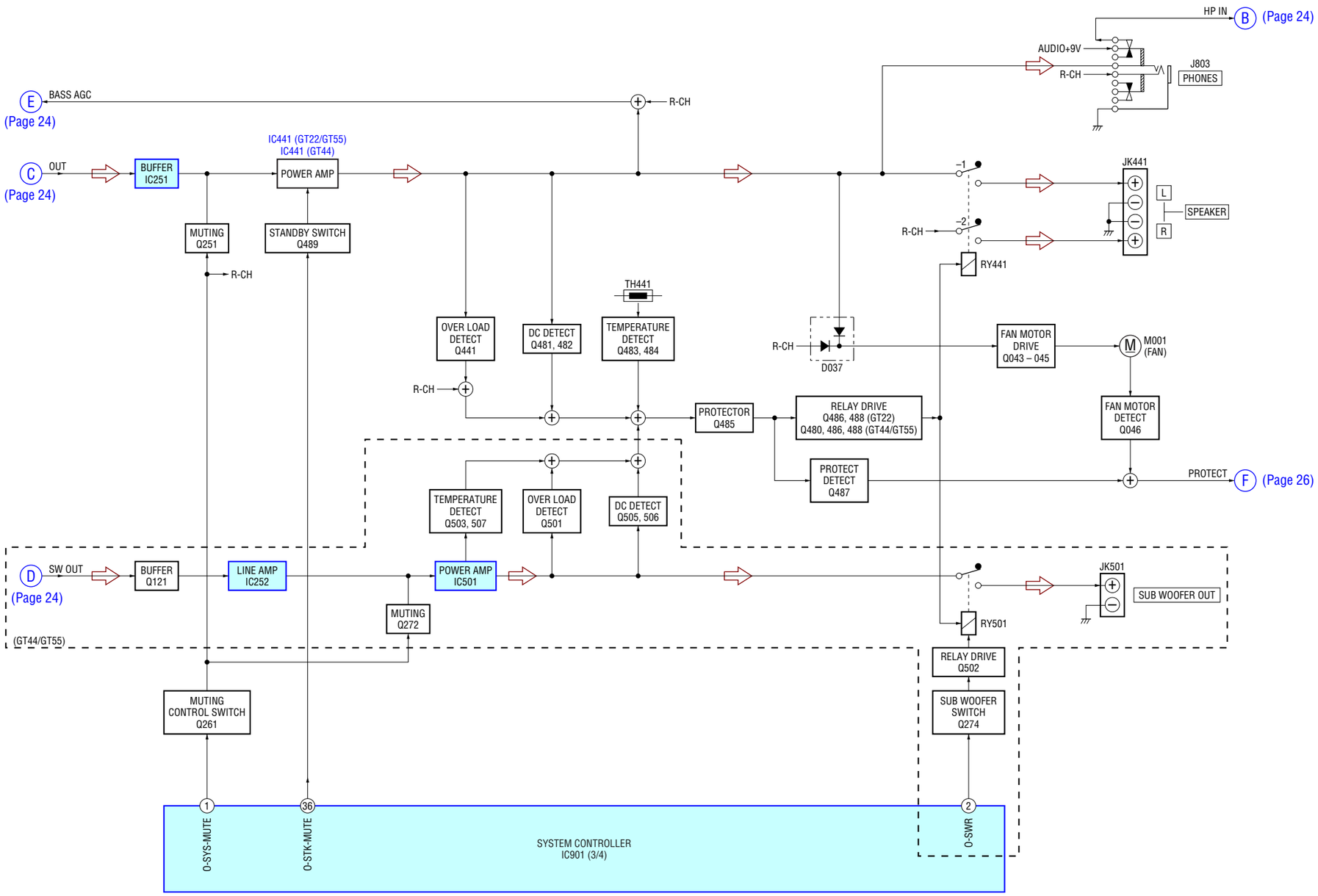

• R-ch is omitted due to same as L-ch.
• SIGNAL PATH
⇨ : TUNER (FM/AM)

7-4. BLOCK DIAGRAM – PANEL, POWER AMP Section –

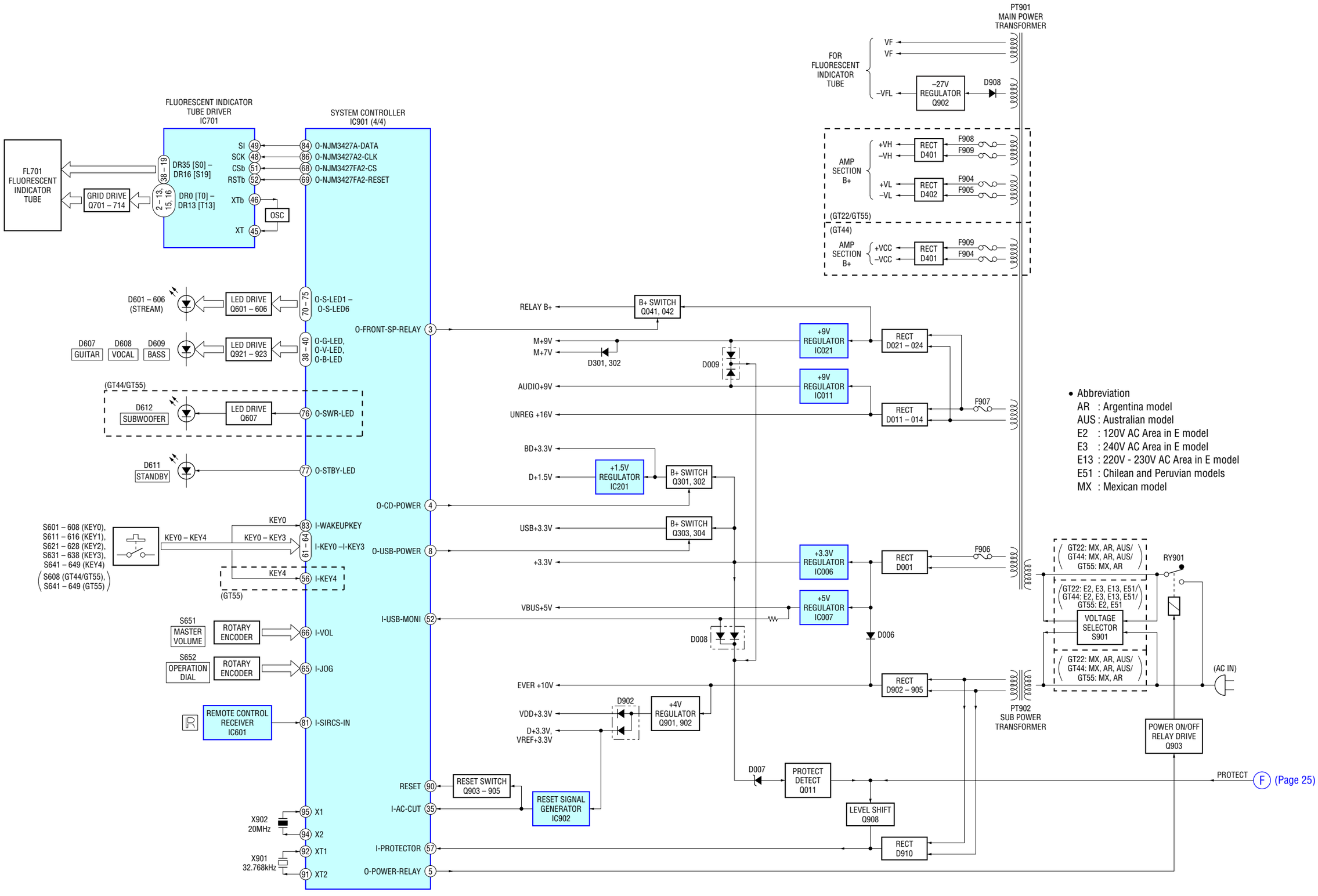

- Abbreviation
  AR : Argentina model
  AUS : Australian model
  E2 : 120V AC Area in E model
  E3 : 240V AC Area in E model
  E13 : 220V - 230V AC Area in E model
  E51 : Chilean and Peruvian models
  MX : Mexican model

• Note For Printed Wiring Boards and Schematic Diagrams

Note on Printed Wiring Board:

- : parts extracted from the component side.
- : parts extracted from the conductor side.
- : indicates side identified with part number.
- : internal component.
- : Pattern from the side which enables seeing.

(The other layers' patterns are not indicated.)

Caution:	
Pattern face side: (Conductor Side)	Parts on the pattern face side seen from the pattern face are indicated.
Parts face side: (Component Side)	Parts on the parts face side seen from the parts face are indicated.

- Indication of transistor

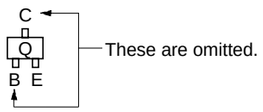

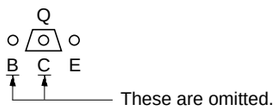

Note on Schematic Diagram:

- All capacitors are in µF unless otherwise noted. (p: pF) 50 WV or less are not indicated except for electrolytics and tantalums.
- All resistors are in Ω and 1/4 W or less unless otherwise specified.
- : internal component.
- : nonflammable resistor.
- : fusible resistor.
- : panel designation.

Note: The components identified by mark ⚠ or dotted line with mark ⚠ are critical for safety.
Replace only with part number specified.

- : B+ Line.
- : B– Line.
- Voltages and waveforms are dc with respect to ground under no-signal (detuned) conditions.
  – CD Board –
  no mark : CD PLAY
  [ ] : USB
  – USB Board –
  no mark : USB
  – TC Board –
  no mark : TAPE PLAY
  ( ) : TAPE REC
  《 》 : TAPE A
  { } : TAPE B
  – Other Board –
  no mark : TUNER (FM/AM)
  ( ) : CD PLAY
  [ ] : TAPE PLAY
  ＊ : Impossible to measure
- Voltages are taken with a VOM (Input impedance 10 MΩ). Voltage variations may be noted due to normal production tolerances.
- Waveforms are taken with a oscilloscope. Voltage variations may be noted due to normal production tolerances.
- Circled numbers refer to waveforms.
- Signal path.
  : TUNER (FM/AM)
  : CD PLAY
  : USB
  : TAPE PLAY (DECK-A)
  : TAPE PLAY (DECK-B)
  : TAPE REC
  : AUDIO IN
  : MIC
- Abbreviation
  AR : Argentina model
  AUS : Australian model
  E2 : 120V AC Area in E model
  E3 : 240V AC Area in E model
  E13 : 220V – 230V AC Area in E model
  E51 : Chilean and Peruvian models
  MX : Mexican model

• Circuit Boards Location

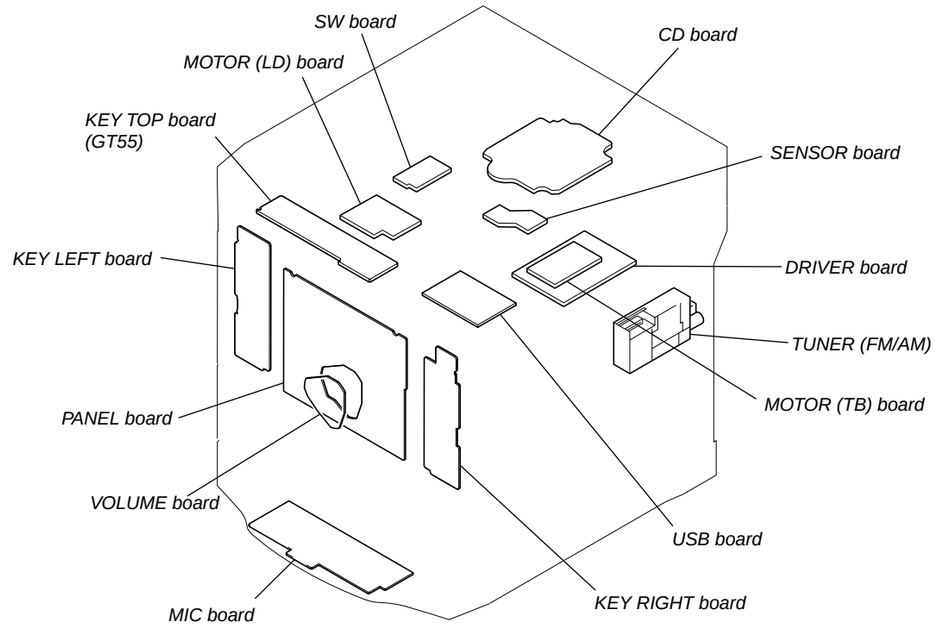

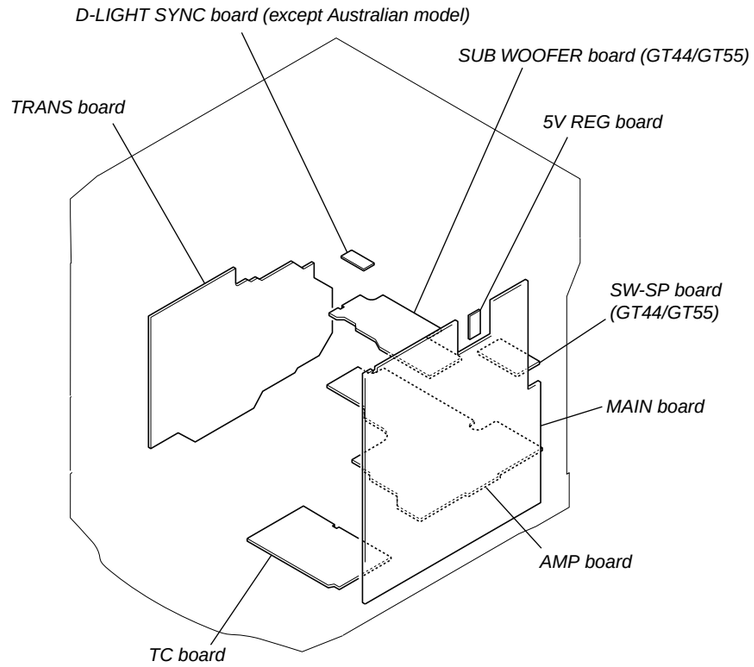

7-5. PRINTED WIRING BOARD – CD Board –

• See page 27 for Circuit Boards Location. : Uses unleaded solder.

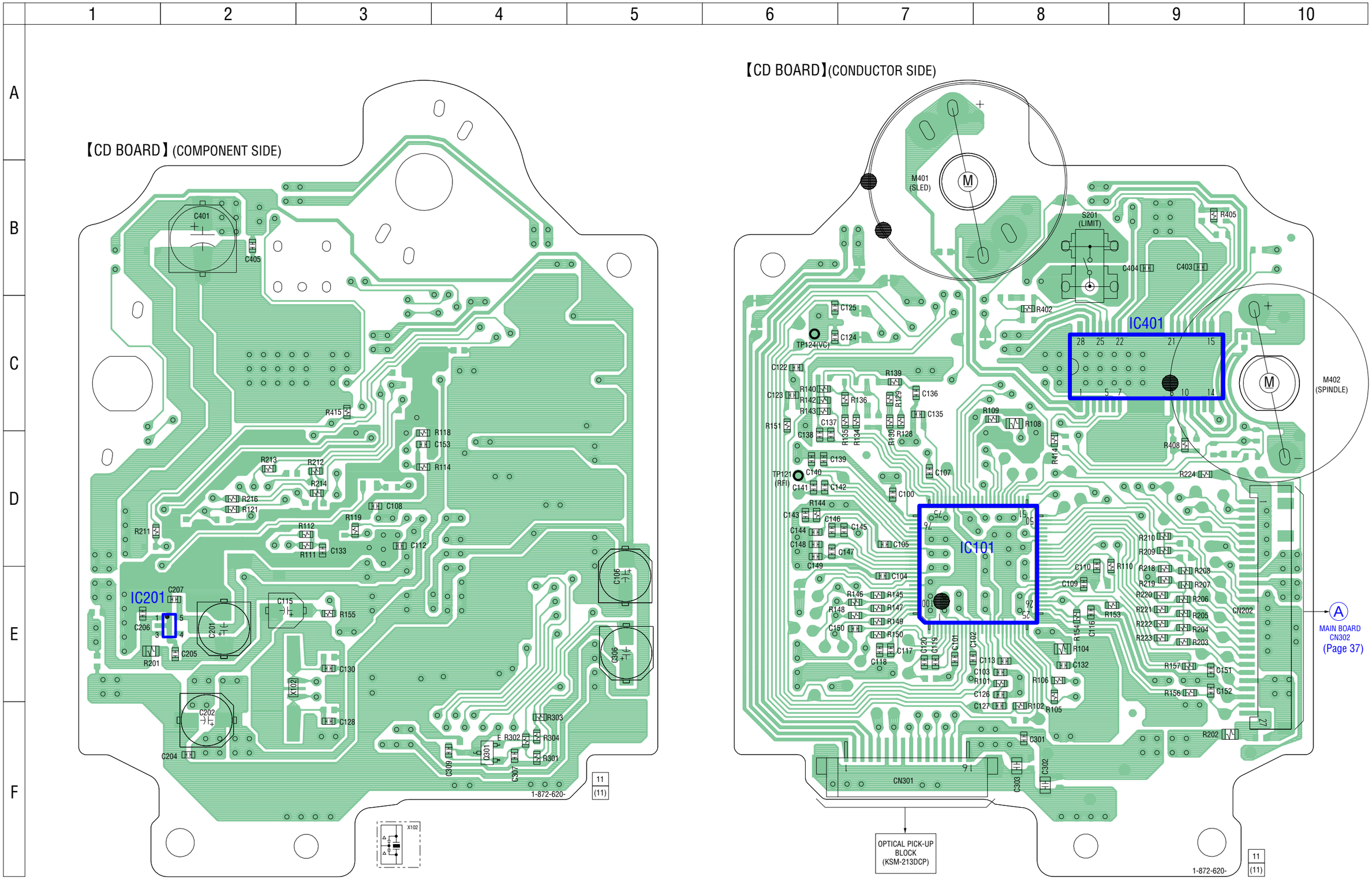

7-6. SCHEMATIC DIAGRAM – CD Board –

• See page 36 for Waveforms. • See page 58 for IC Block Diagrams. • See page 61 for IC Pin Function Description.

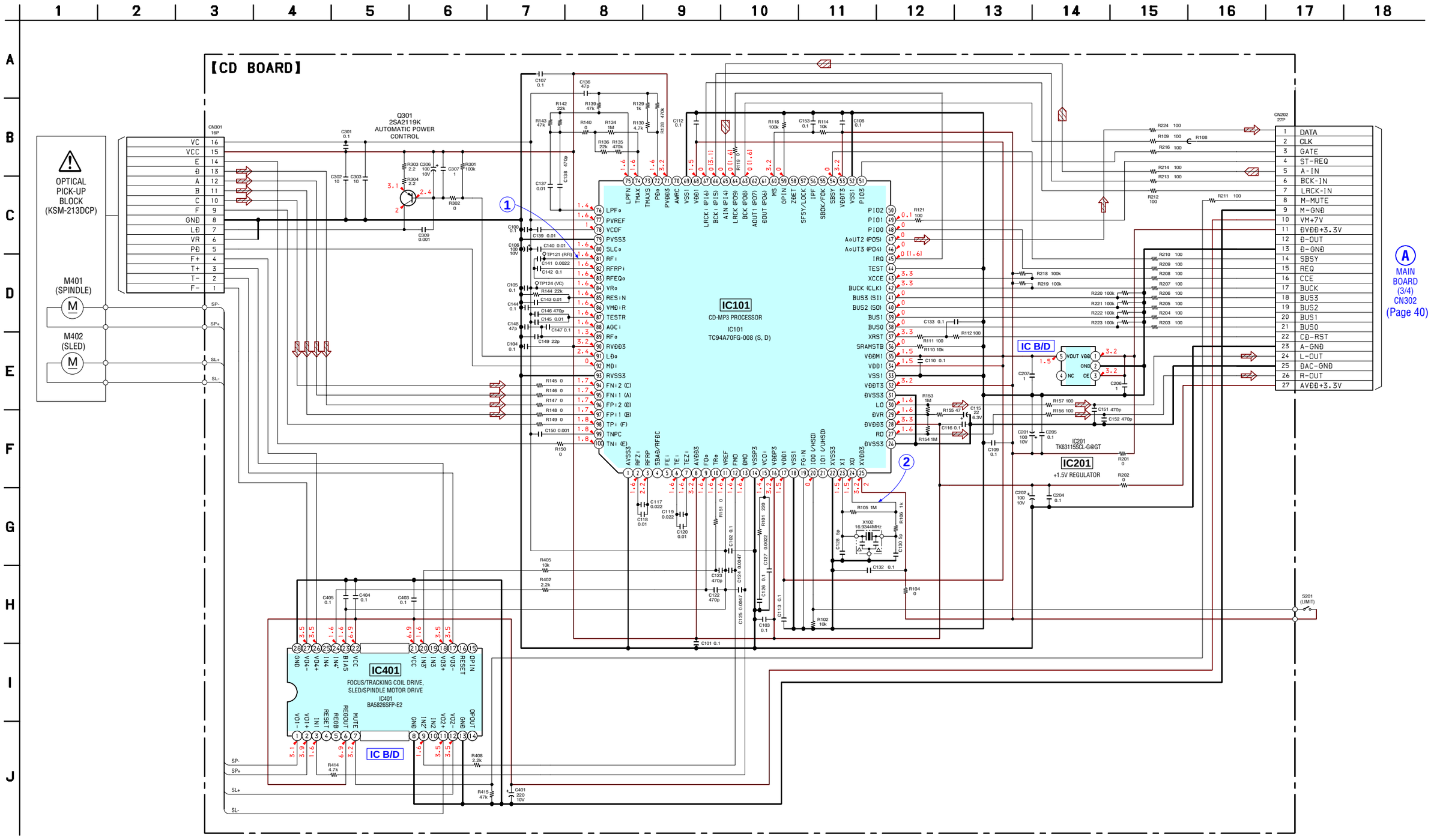

7-7. PRINTED WIRING BOARDS – CHANGE Section –

• See page 27 for Circuit Boards Location.

: Uses unleaded solder.

- **Semiconductor Location**

Ref. No.	Location
D701	E-7
D711	E-7
IC701	F-7
IC712	F-8
IC731	F-5
Q731	C-9

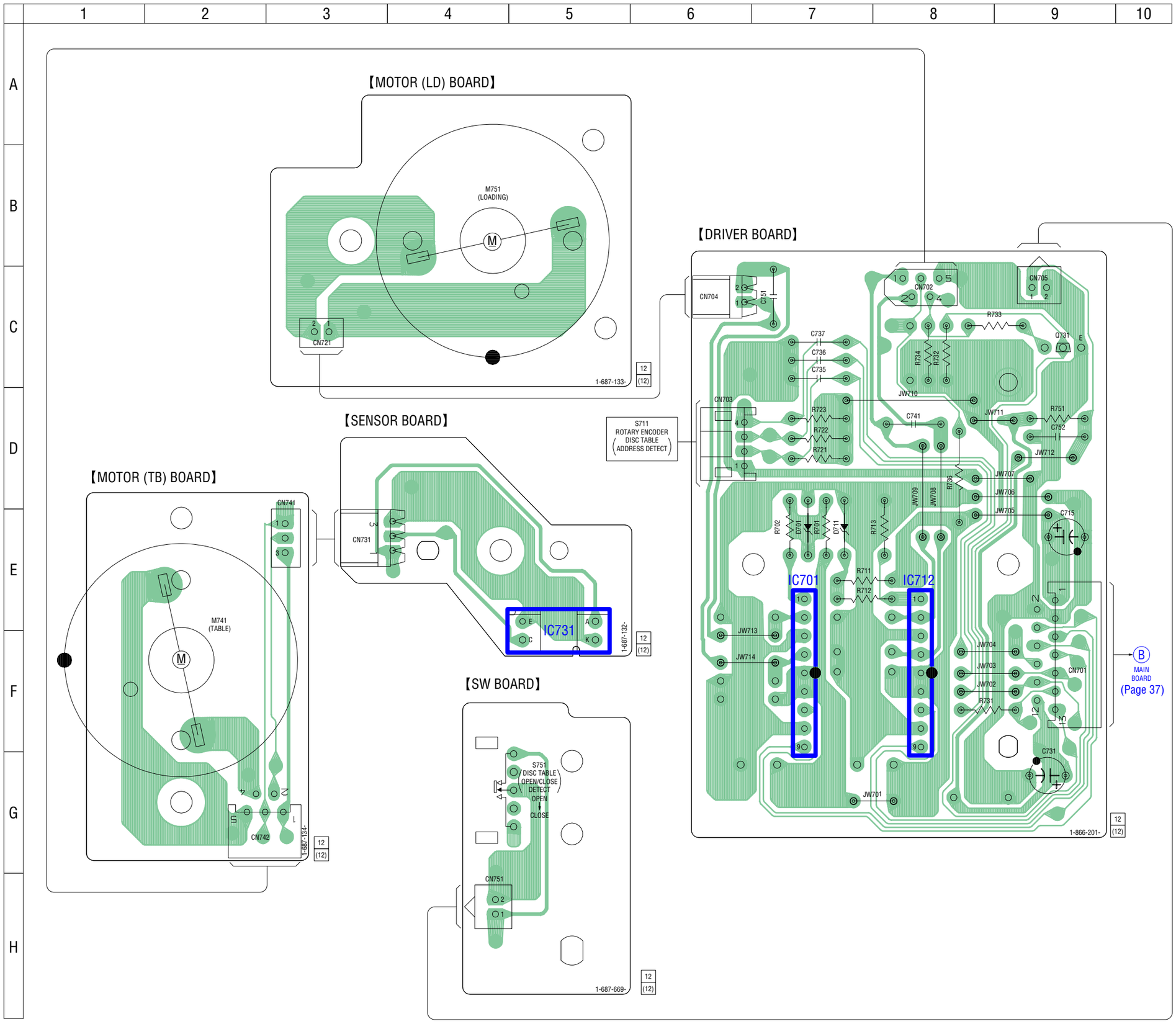

7-8. SCHEMATIC DIAGRAM – CHANGE Section –

• See page 58 for IC Block Diagrams.

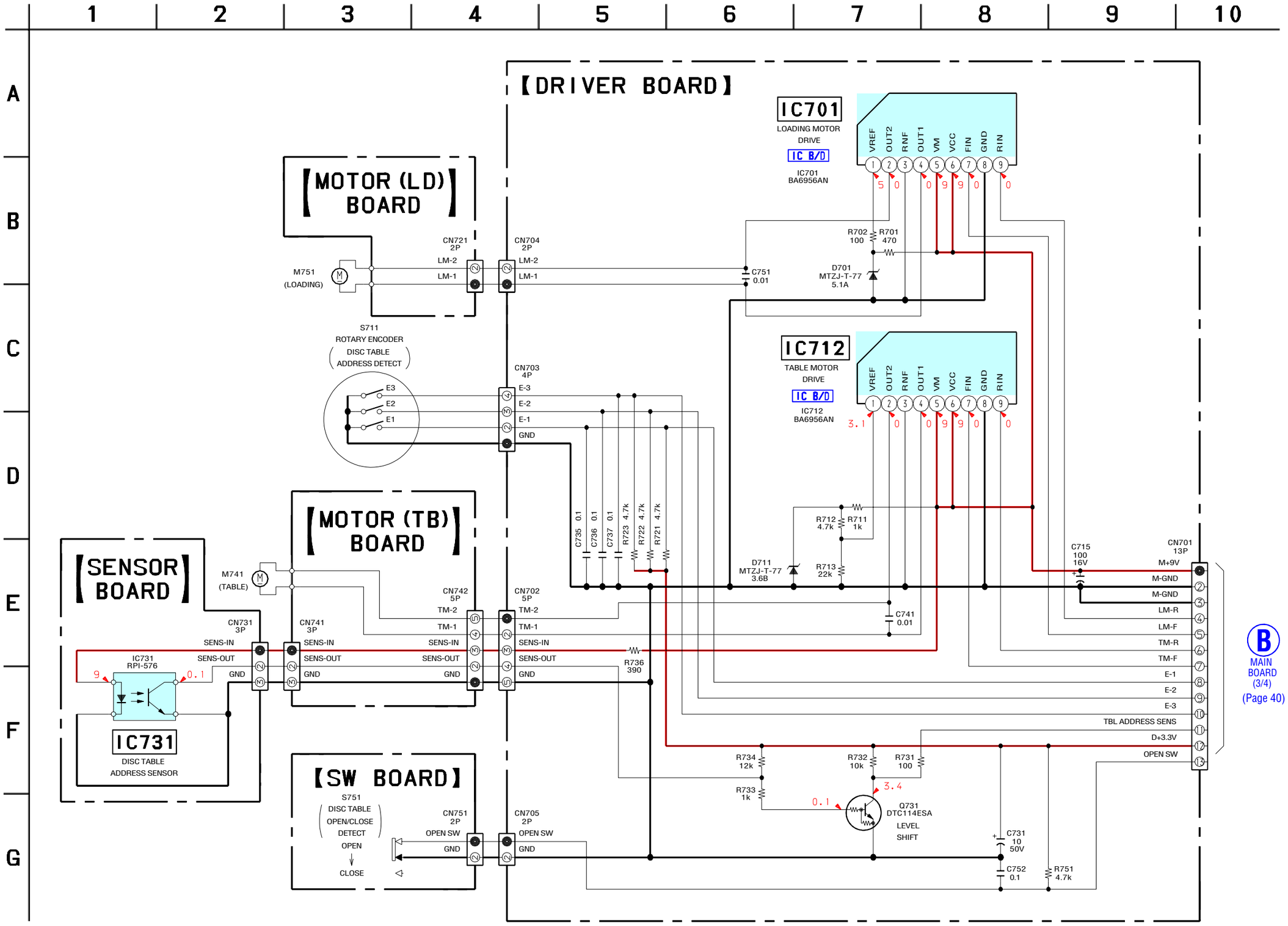

7-9. PRINTED WIRING BOARD – USB Board –

• See page 27 for Circuit Boards Location. : Uses unleaded solder.

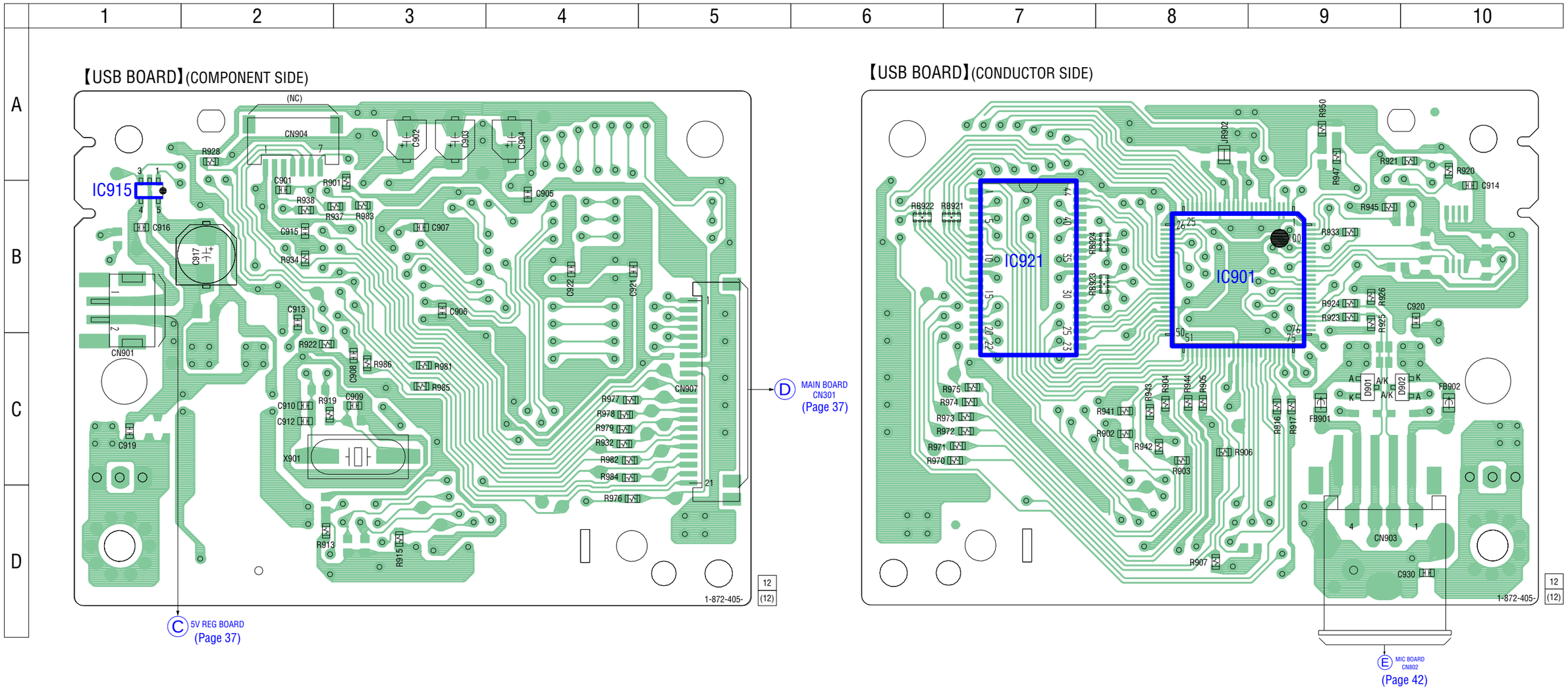

7-10. SCHEMATIC DIAGRAM – USB Board –

• See page 36 for Waveforms. • See page 58 for IC Block Diagrams. • See page 61 for IC Pin Function Description.

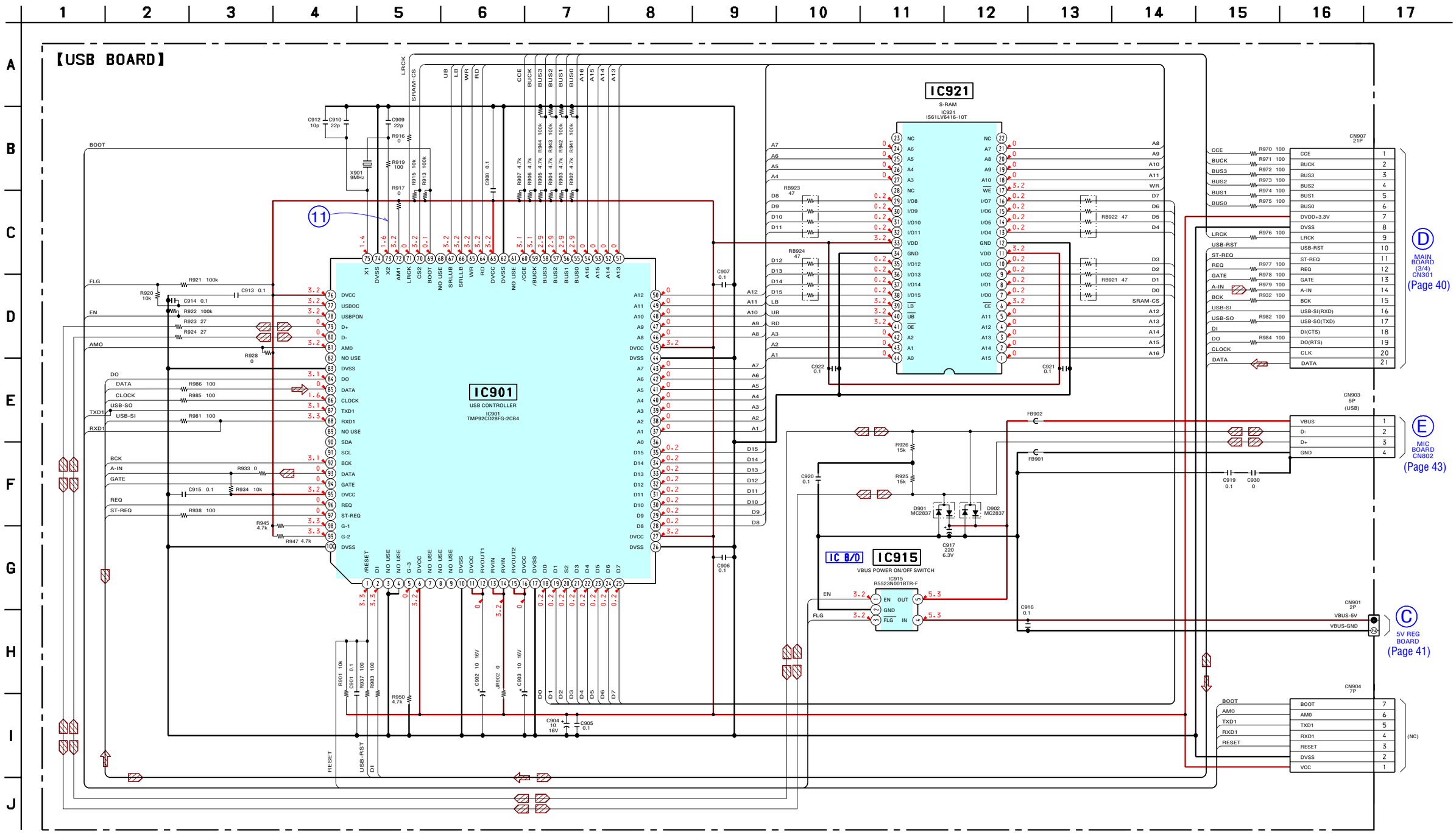

7-11. PRINTED WIRING BOARD – TC Board –

• See page 27 for Circuit Boards Location.

: Uses unleaded solder.

• **Semiconductor Location**

Ref. No.	Location
D301	B-1
D401	B-3
IC301	B-1
IC401	B-3
Q301	C-1
Q302	C-2
Q303	C-2
Q304	C-2
Q305	C-3
Q306	C-3
Q401	C-3
Q402	C-2
Q403	C-2
Q404	B-3
Q405	B-3
Q406	B-3
Q407	C-1
Q408	A-4
Q409	A-3
Q410	B-3
Q453	B-4
Q454	B-4
Q455	B-4

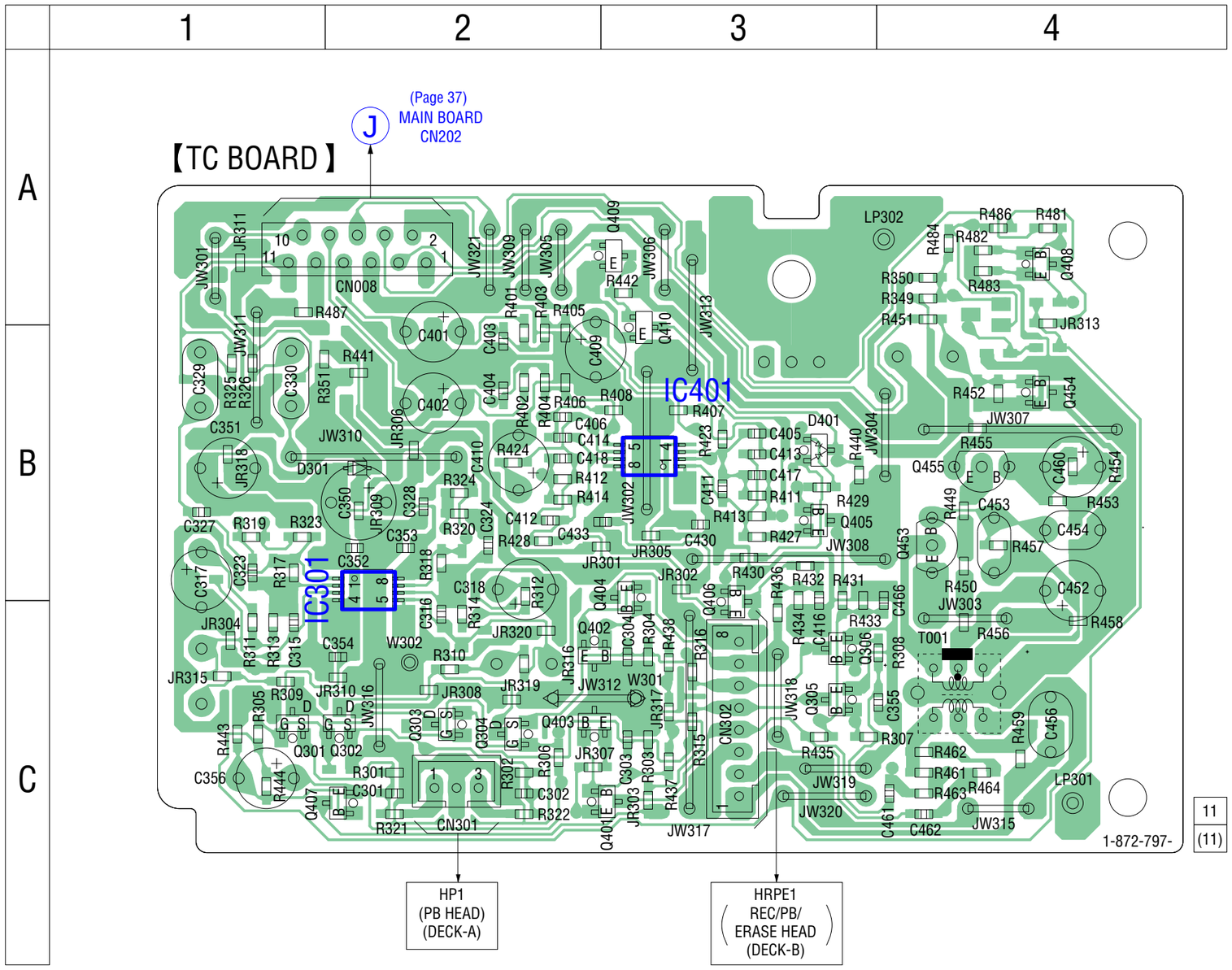

7-12. SCHEMATIC DIAGRAM – TC Board – • See page 36 for Waveforms

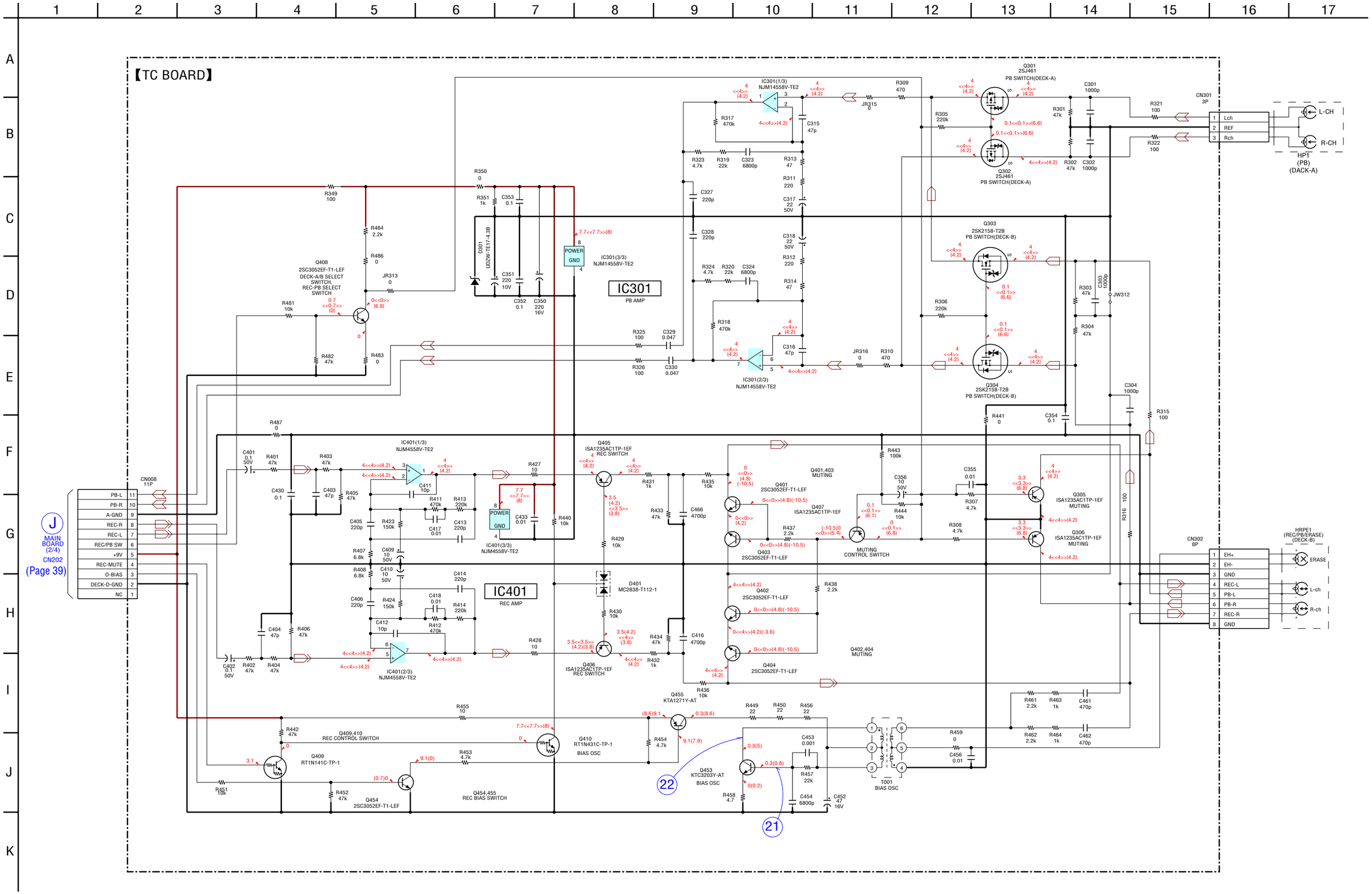

- **Waveforms**

– CD Board –

① **IC101 ㊶ (RFi)**
(CD play mode)

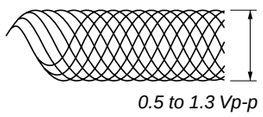

200 mV/DIV, 500 ns/DIV

② **IC101 ㉔ (XO)**
(CD play mode)

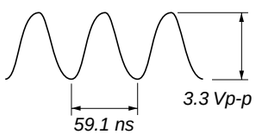

1 V/DIV, 20 ns/DIV

– TC Board –

㉑ **Q453 (Base) (REC mode)**

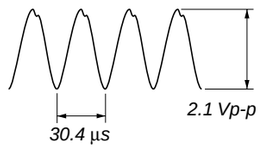

1 V/DIV, 20 µs/DIV

㉒ **Q453 (Collector) (REC mode)**

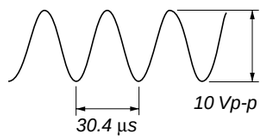

5 V/DIV, 20 µs/DIV

– PANEL Board –

㊶ **IC701 ㊻ (XTb)**

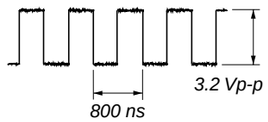

2 V/DIV, 500 ns/DIV

– USB Board –

⑪ **IC901 ㉓ (X2)**

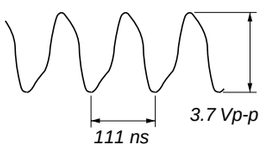

1 V/DIV, 50 ns/DIV

– MAIN Board –

㉛ **IC901 ㉑ (XT2)**

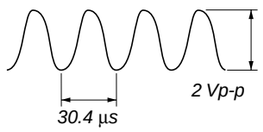

1 V/DIV, 20 µs/DIV

㉜ **IC901 ㉔ (X2)**

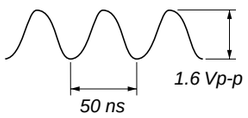

1 V/DIV, 20 ns/DIV

㉝ **IC901 ㉖**
(O-NJM3427A2-CLK)

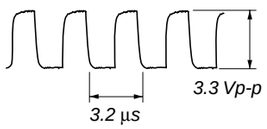

2 V/DIV, 2 µs/DIV

7-13. PRINTED WIRING BOARDS – MAIN Section –

• See page 27 for Circuit Boards Location. : Uses unleaded solder.

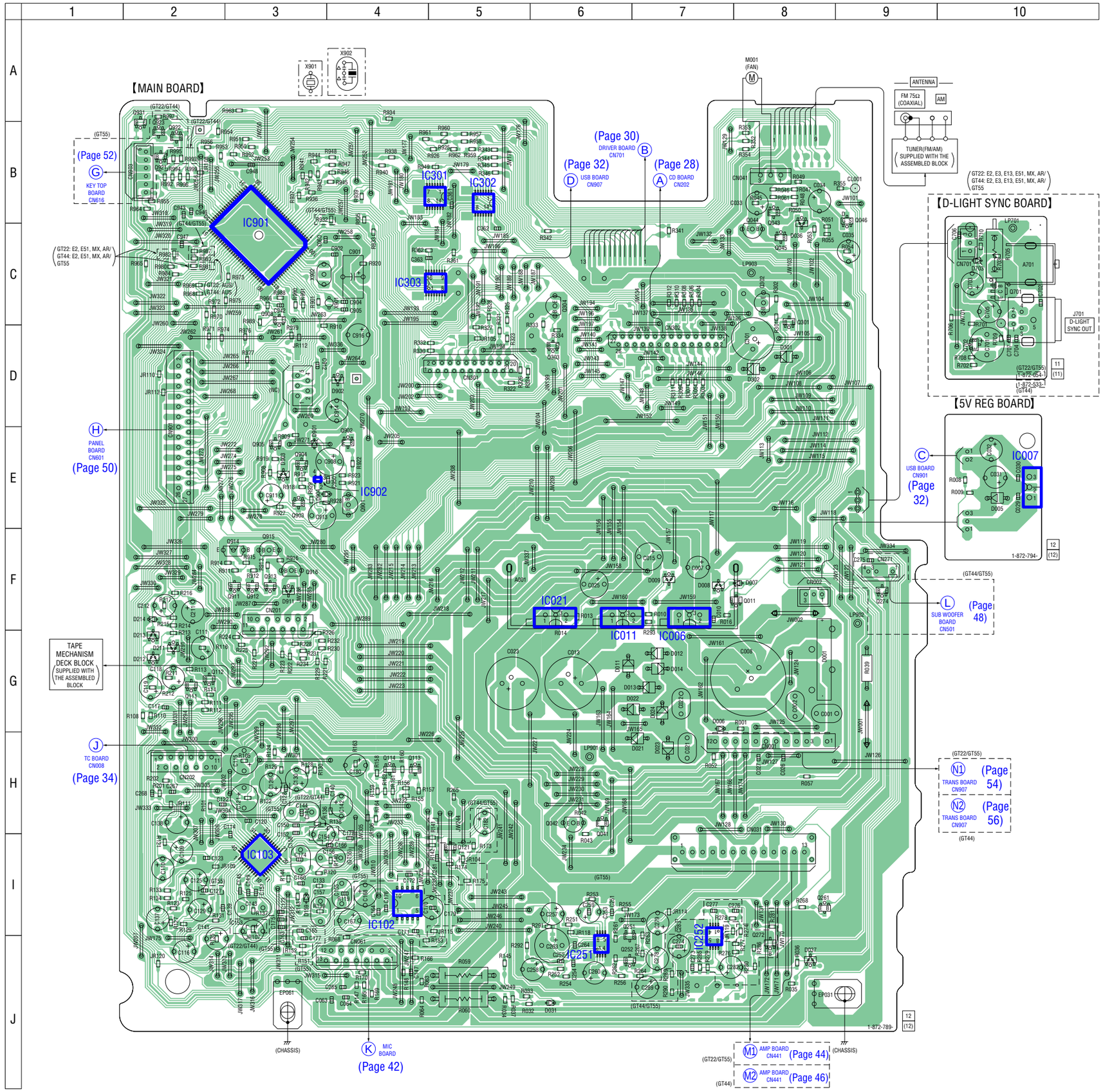

• Semiconductor Location

Ref. No.	Location	Ref. No.	Location
D001	G-8	IC901	C-3
D005	E-10	IC902	E-4
D006	G-7		
D007	F-8	Q011	F-8
D008	F-7	Q041	I-6
D009	F-7	Q042	H-6
D011	G-6	Q043	C-8
D012	G-7	Q044	B-8
D013	G-6	Q045	C-8
D014	G-7	Q046	B-9
D021	H-7	Q111	G-2
D022	G-7	Q112	G-2
D023	H-7	Q113	H-4
D024	G-7	Q114	H-4
D031	J-6	Q121	I-5
D036	C-8	Q251	I-6
D037	J-8	Q252	J-6
D159	I-3	Q261	I-8
D211	G-2	Q272	I-8
D212	G-2	Q274	F-9
D213	G-2	Q301	C-8
D214	F-2	Q302	C-8
D301	D-8	Q303	D-6
D302	D-8	Q304	C-6
D703	C-10	Q701	C-10
D901	E-3	Q702	D-10
D902	D-4	Q901	E-4
D903	E-3	Q902	E-4
D904	E-3	Q903	E-3
D911	F-3	Q904	E-3
		Q905	E-3
IC006	G-7	Q908	C-3
IC007	E-10	Q911	F-3
IC011	G-6	Q912	F-3
IC021	F-6	Q913	F-3
IC102	I-4	Q914	F-3
IC103	I-3	Q915	F-3
IC251	J-6	Q916	F-3
IC252	J-7	Q921	B-2
IC301	B-5	Q922	B-2
IC302	B-5	Q923	B-2
IC303	C-4	Q931	A-2

7-14. SCHEMATIC DIAGRAM – MAIN Section (1/4) –

• See page 36 for Waveforms. • See page 61 for IC Pin Function Description.

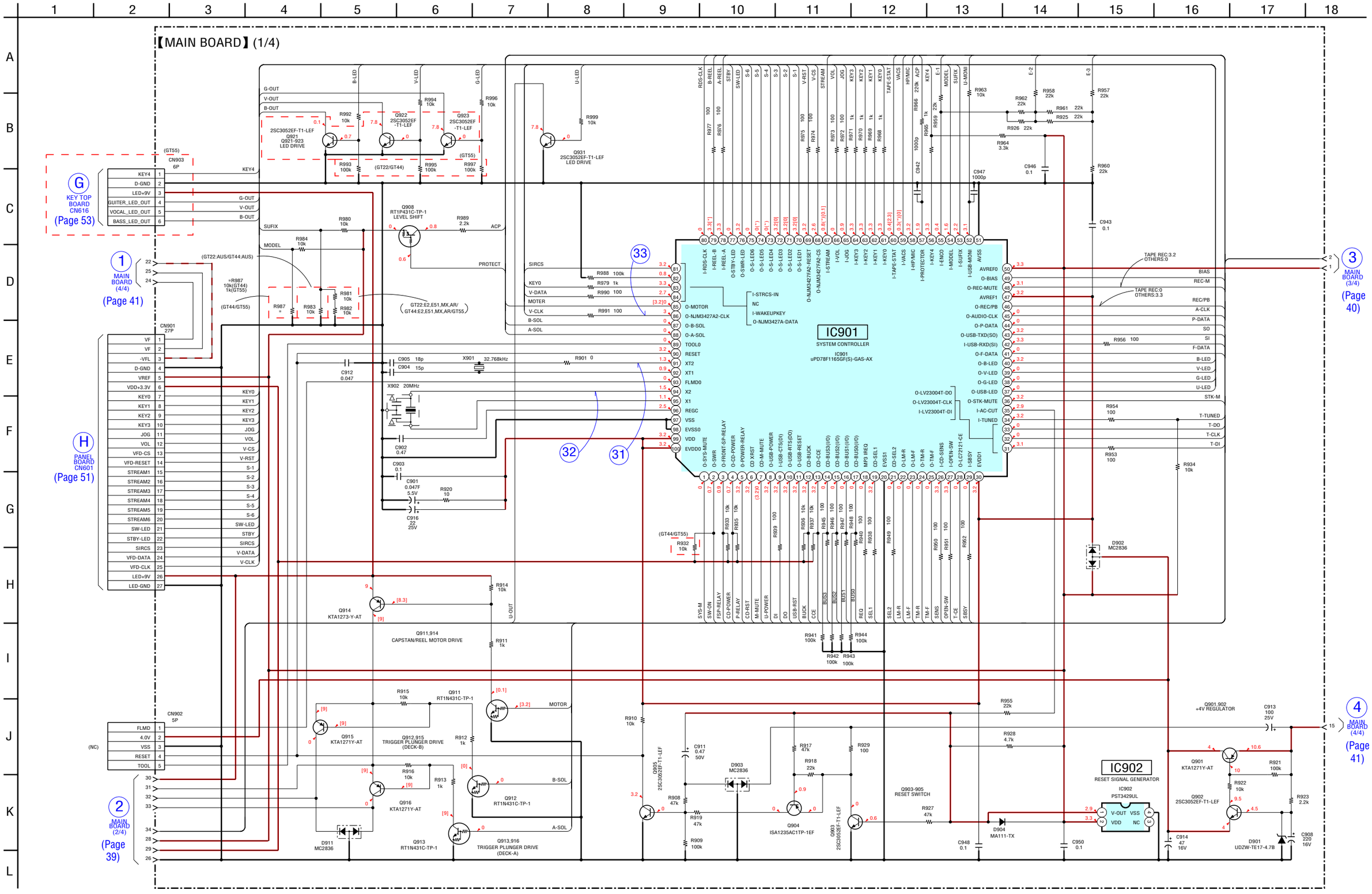

7-15. SCHEMATIC DIAGRAM – MAIN Section (2/4) –

• See page 58 for IC Block Diagrams.

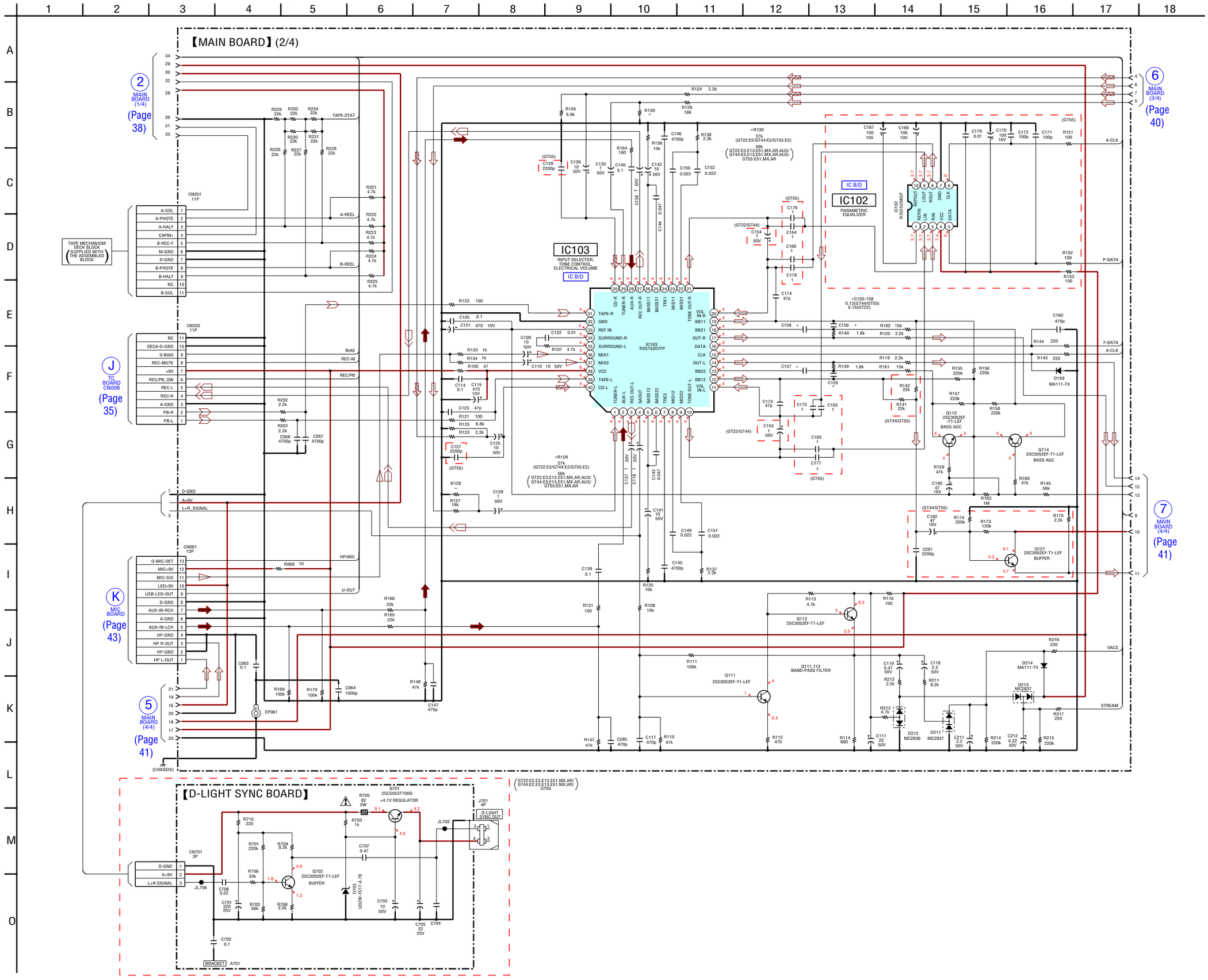

7-16. SCHEMATIC DIAGRAM – MAIN Section (3/4) –

• See page 58 for IC Block Diagrams.

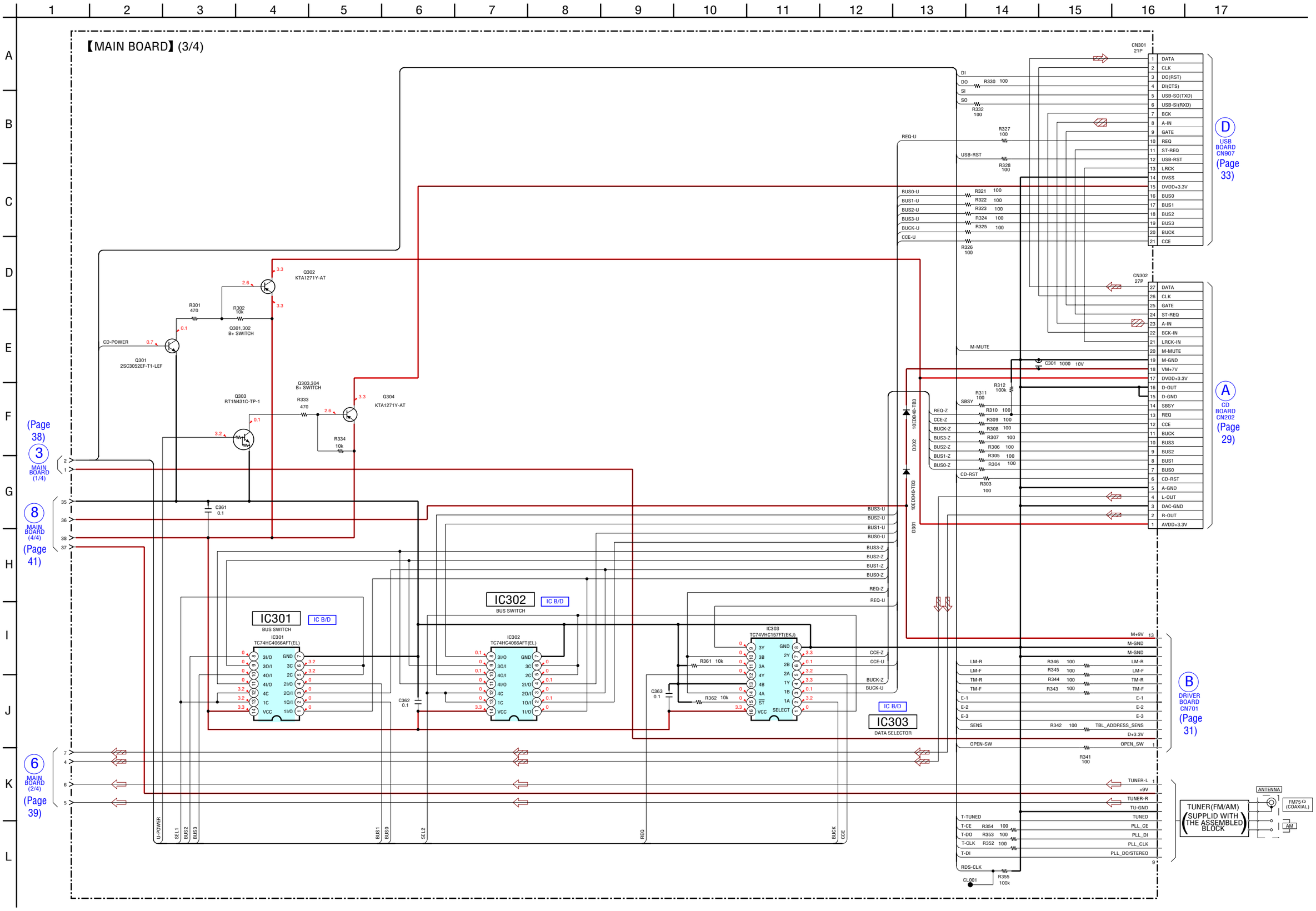

7-17. SCHEMATIC DIAGRAM – MAIN Section (4/4) –

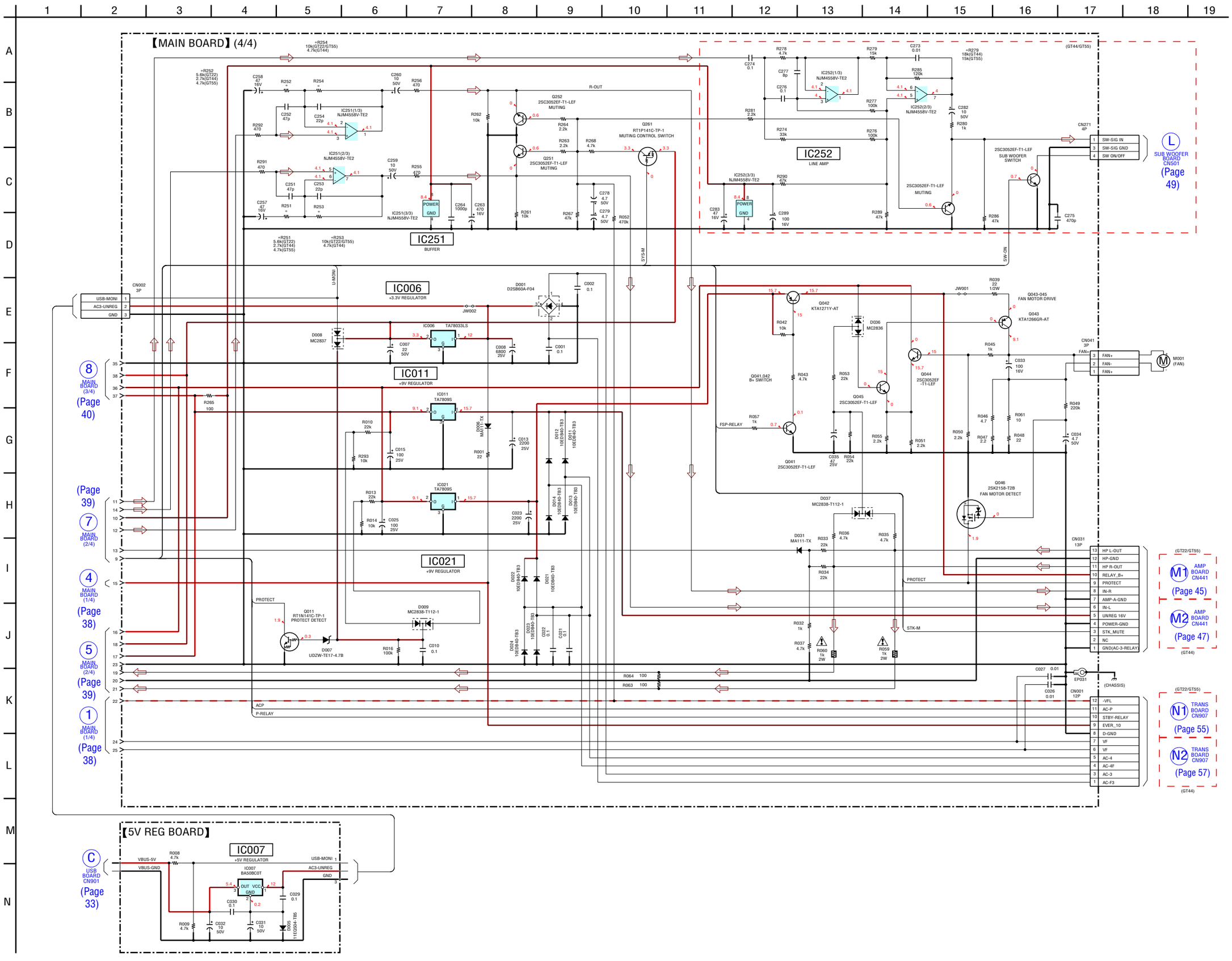

7-18. PRINTED WIRING BOARD – MIC Board –

• See page 27 for Circuit Boards Location.

: Uses unleaded solder.

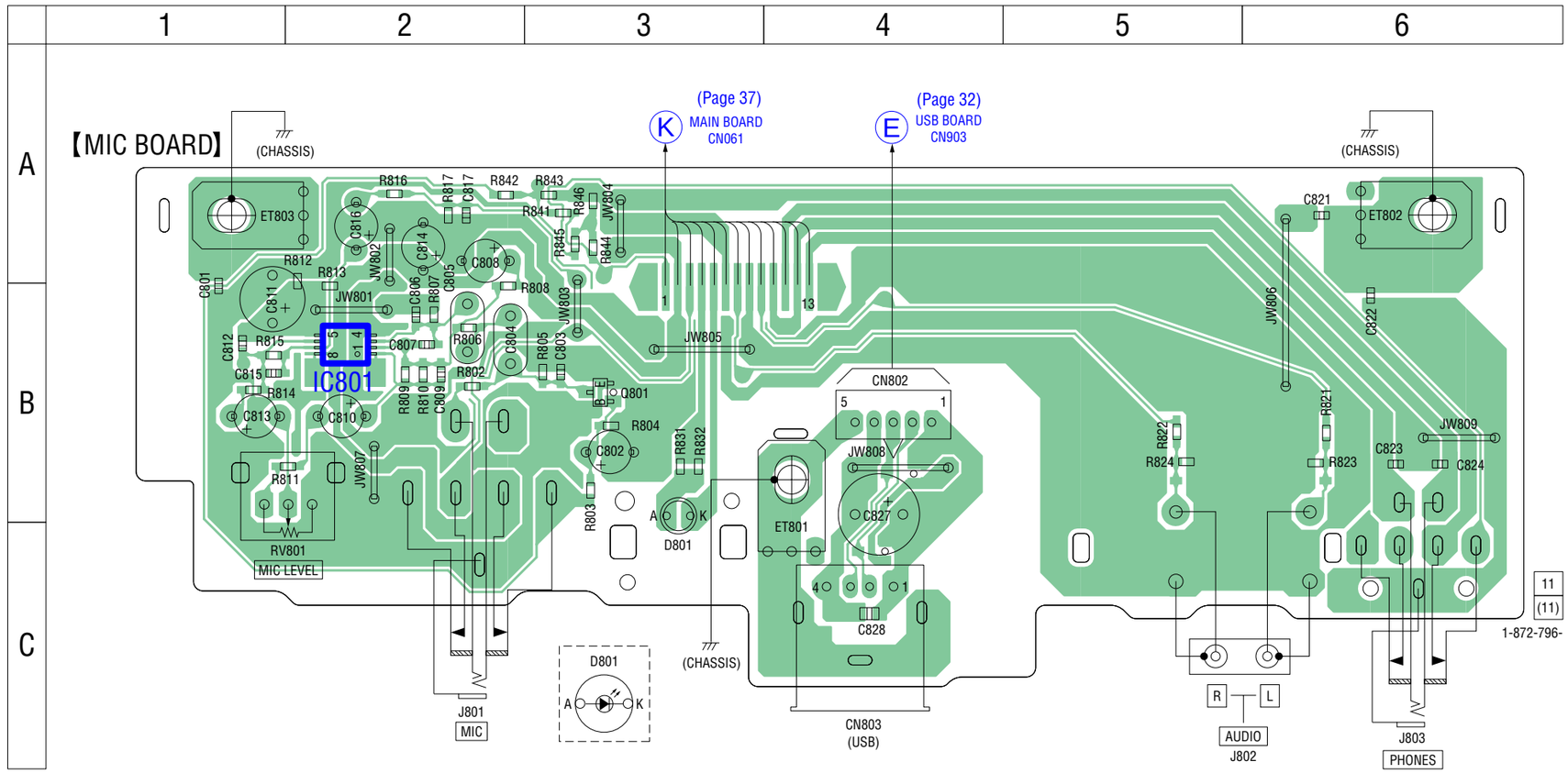

7-19. SCHEMATIC DIAGRAM – MIC Board –

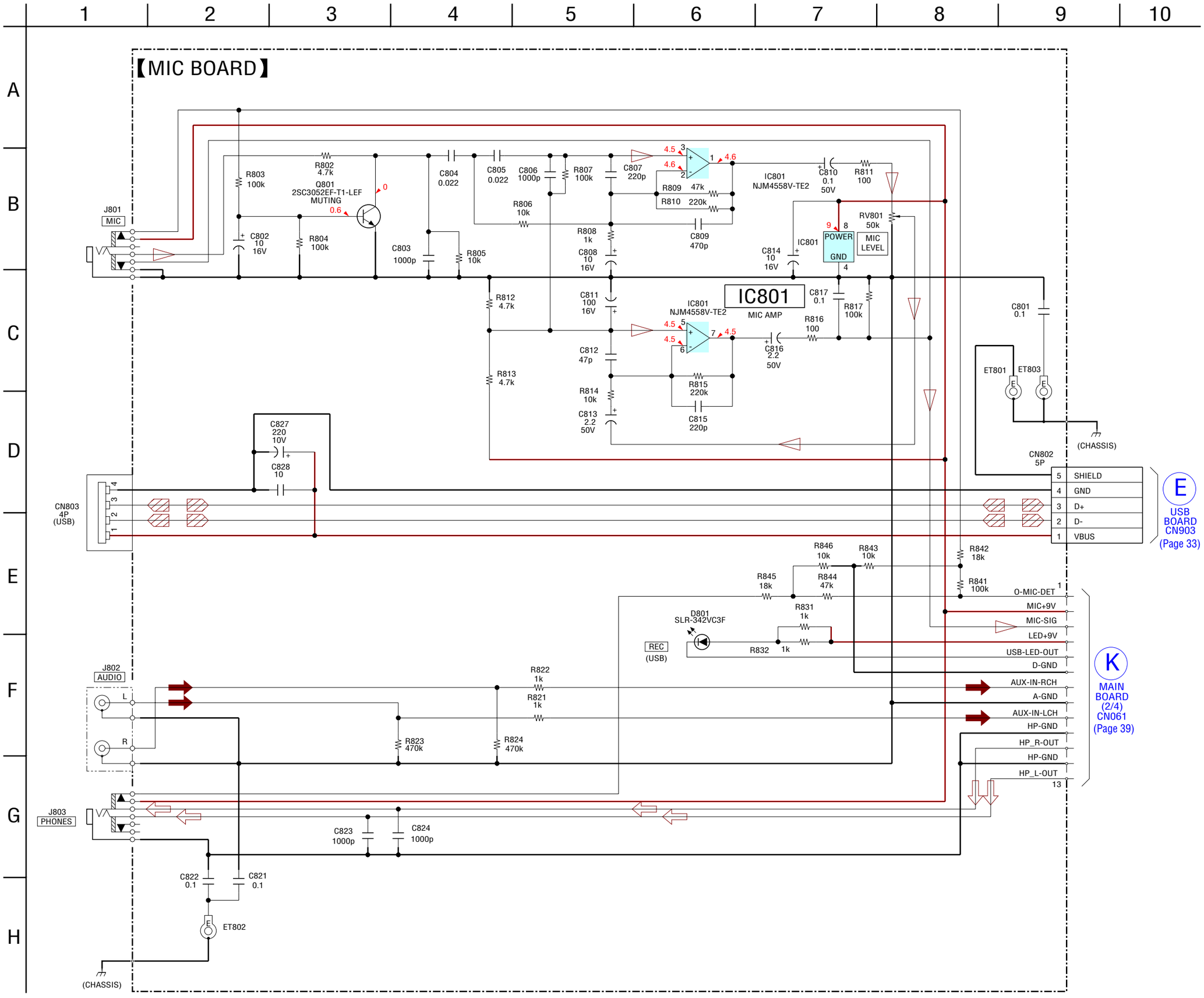

7-20. PRINTED WIRING BOARD – AMP Board (GT22/GT55) –

• See page 27 for Circuit Boards Location.

: Uses unleaded solder.

• **Semiconductor Location**

Ref. No.	Location
D401	F-4
D402	F-3
D441	C-6
D443	B-2
D445	B-8
D446	B-8
D447	B-7
D448	B-7
D481	C-7
D483	C-7
IC441	B-6
Q441	C-7
Q442	C-6
Q480	C-5
Q481	D-8
Q482	D-8
Q483	B-9
Q484	B-8
Q485	C-5
Q486	C-6
Q487	C-6
Q488	C-5
Q489	C-8

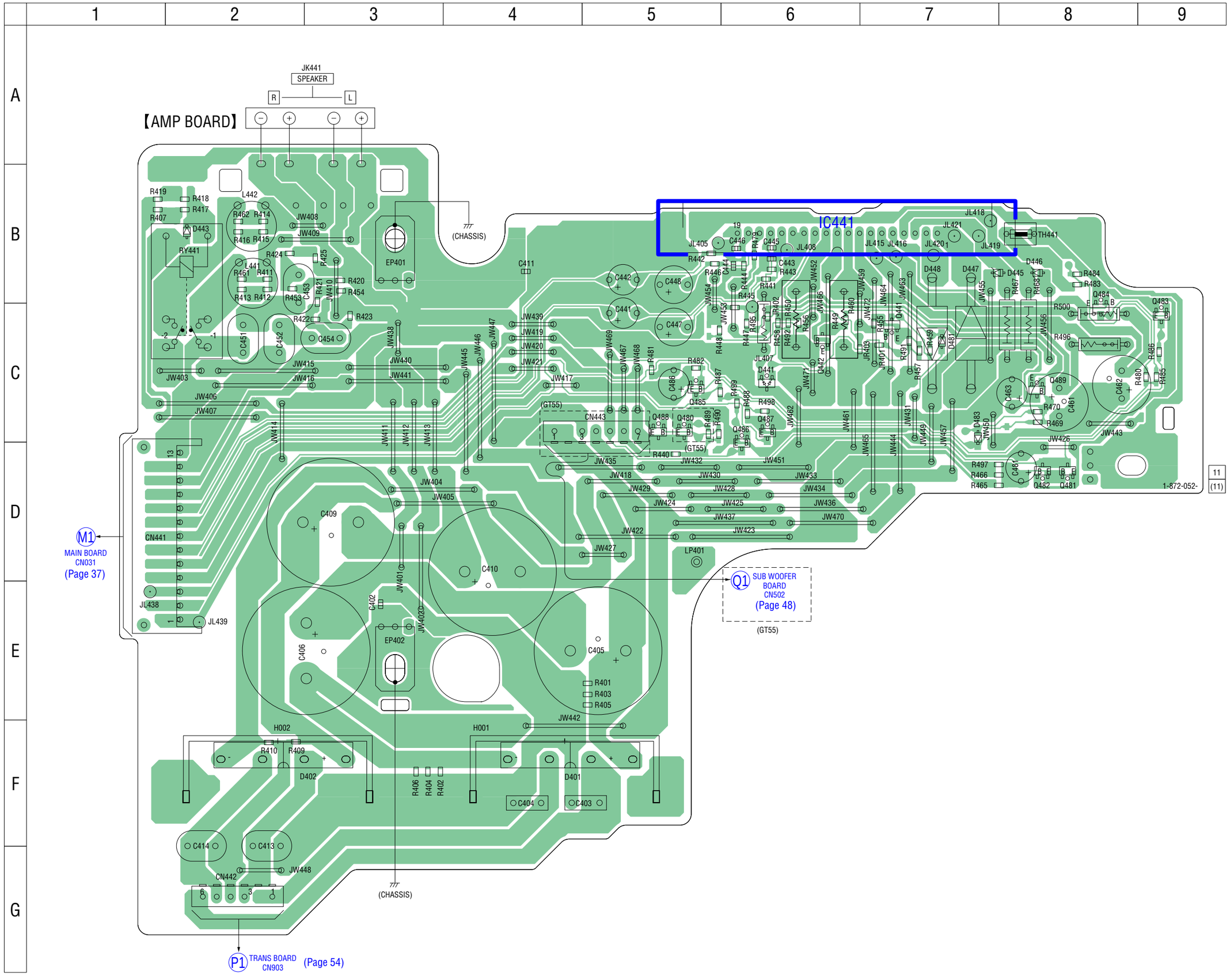

7-21. SCHEMATIC DIAGRAM – AMP Board (GT22/GT55) – • See page 58 for IC Block Diagrams.

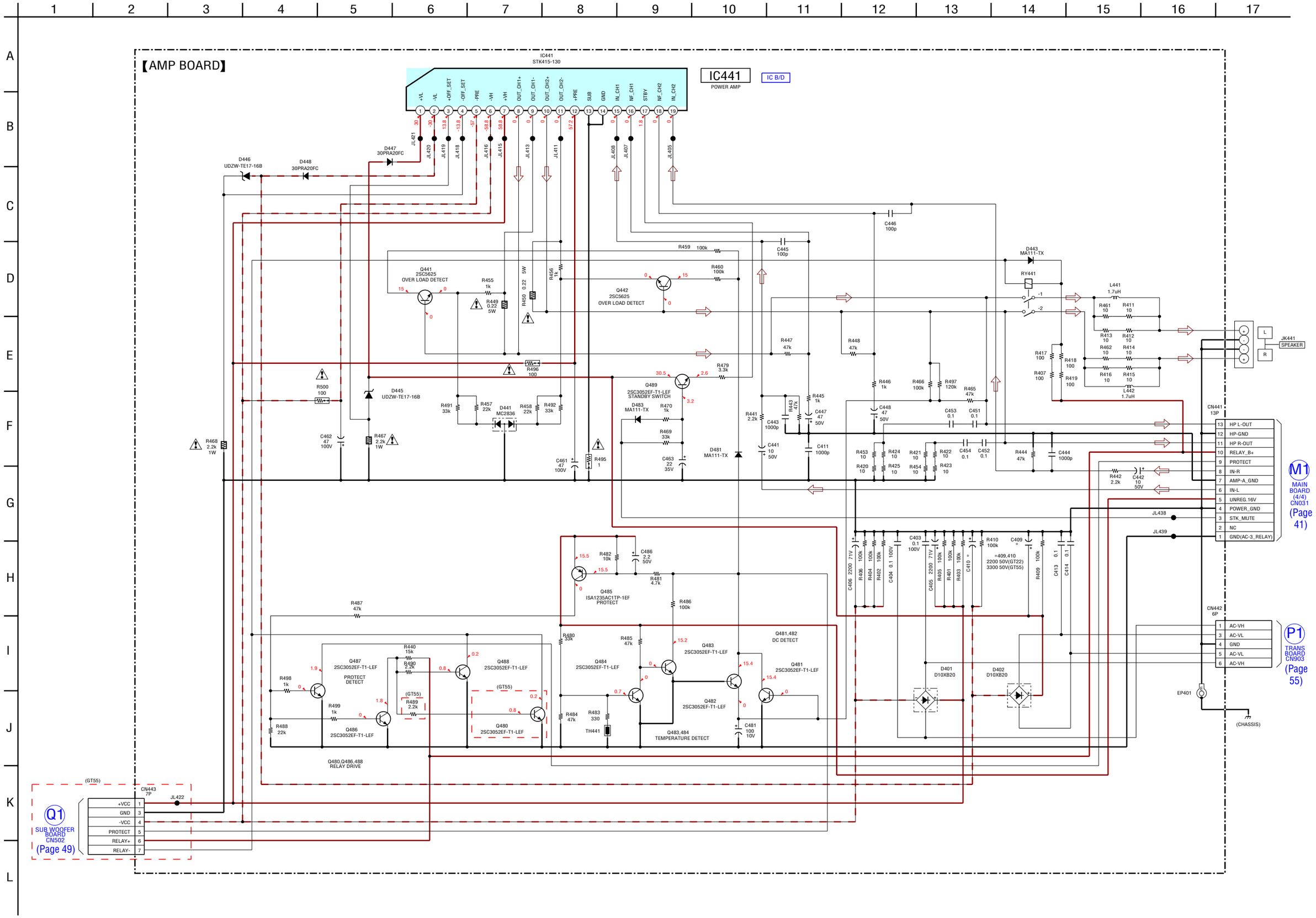

7-22. PRINTED WIRING BOARD – AMP Board (GT44) – • See page 27 for Circuit Boards Location. : Uses unleaded solder.

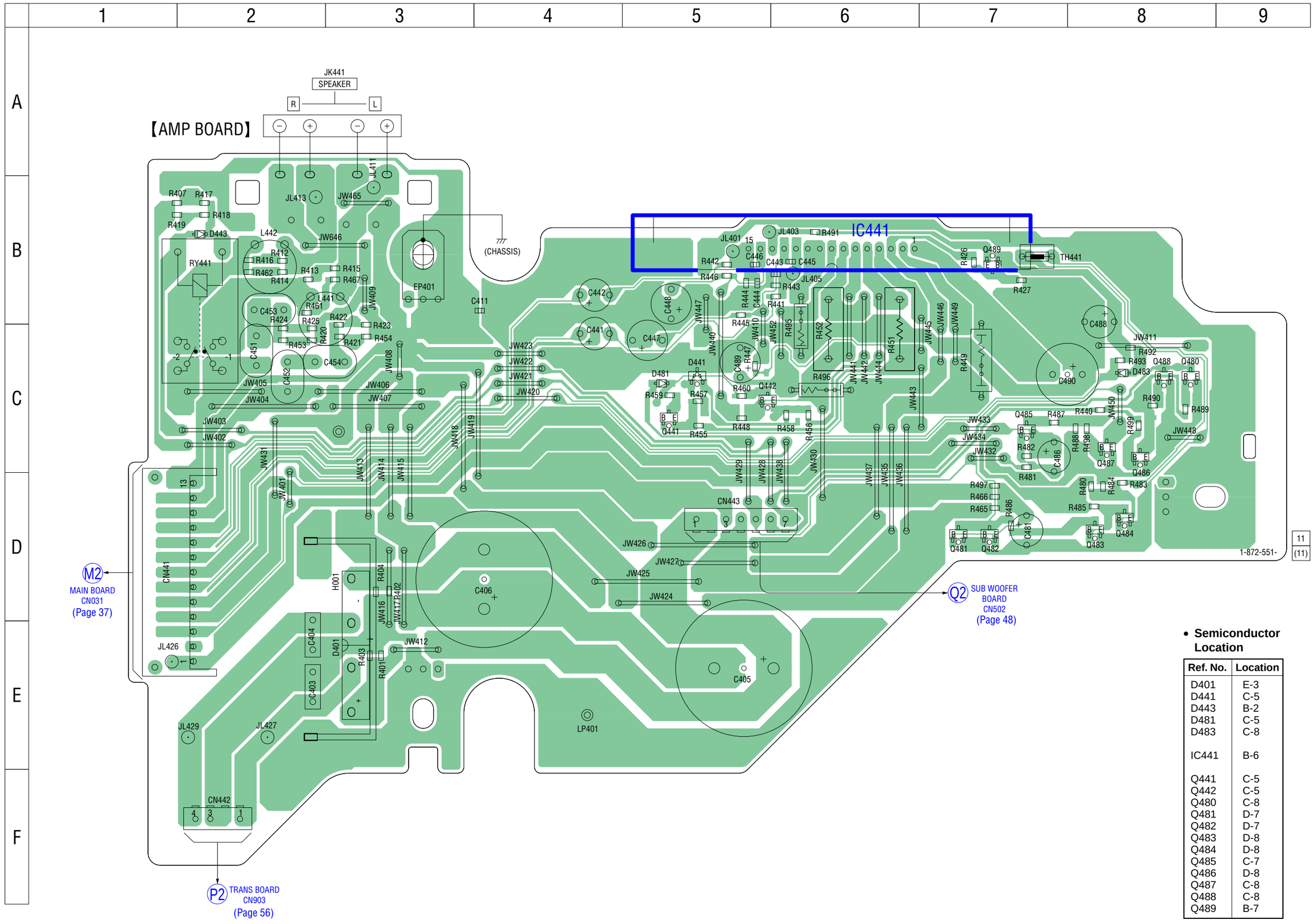

- **Semiconductor Location**

Ref. No.	Location
D401	E-3
D441	C-5
D443	B-2
D481	C-5
D483	C-8
IC441	B-6
Q441	C-5
Q442	C-5
Q480	C-8
Q481	D-7
Q482	D-7
Q483	D-8
Q484	D-8
Q485	C-7
Q486	D-8
Q487	C-8
Q488	C-8
Q489	B-7

7-23. SCHEMATIC DIAGRAM – AMP Board (GT44) – • See page 58 for IC Block Diagrams.

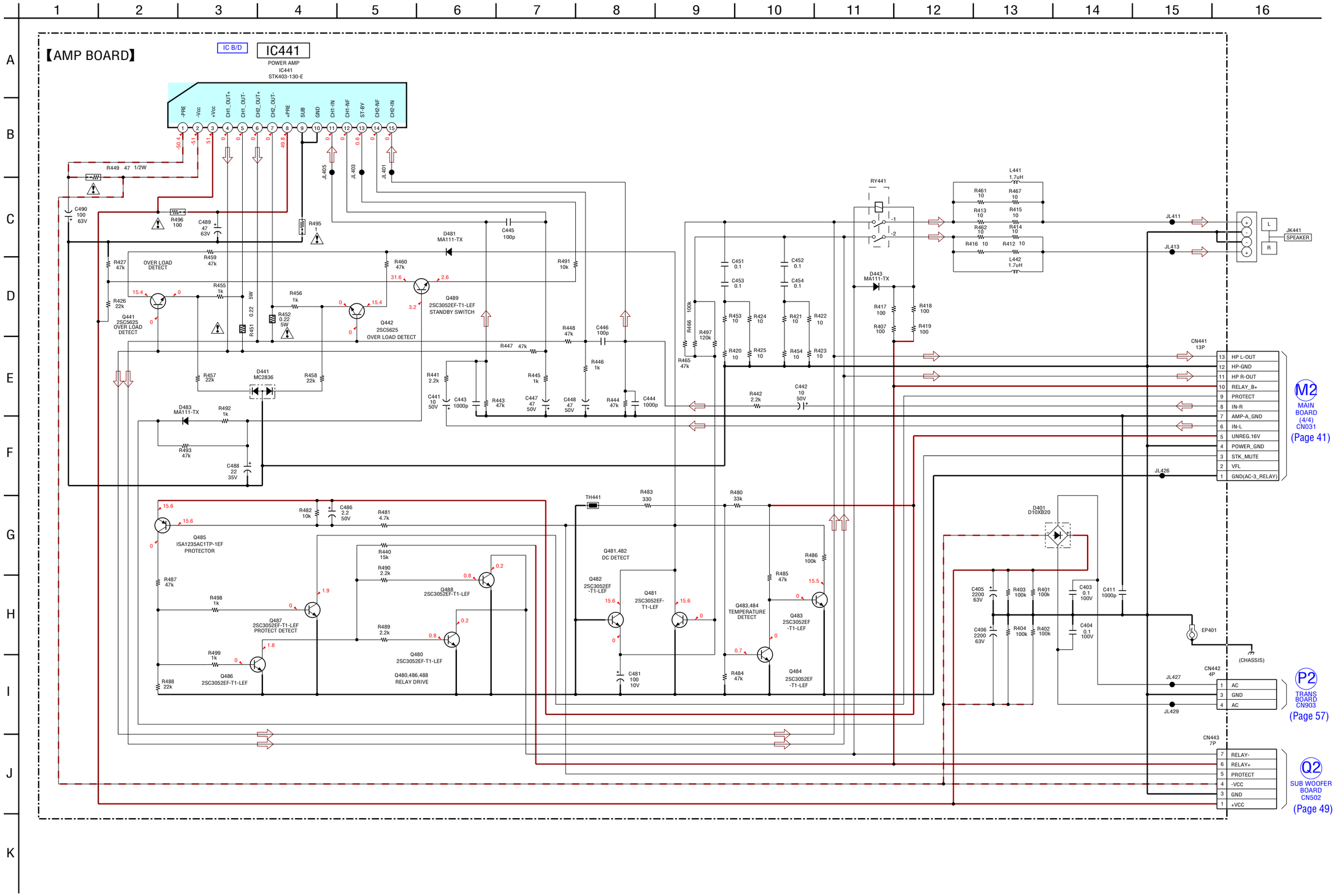

7-24. PRINTED WIRING BOARDS – SUB WOOFER Section (GT44/GT55) –

• See page 27 for Circuit Boards Location. : Uses unleaded solder.

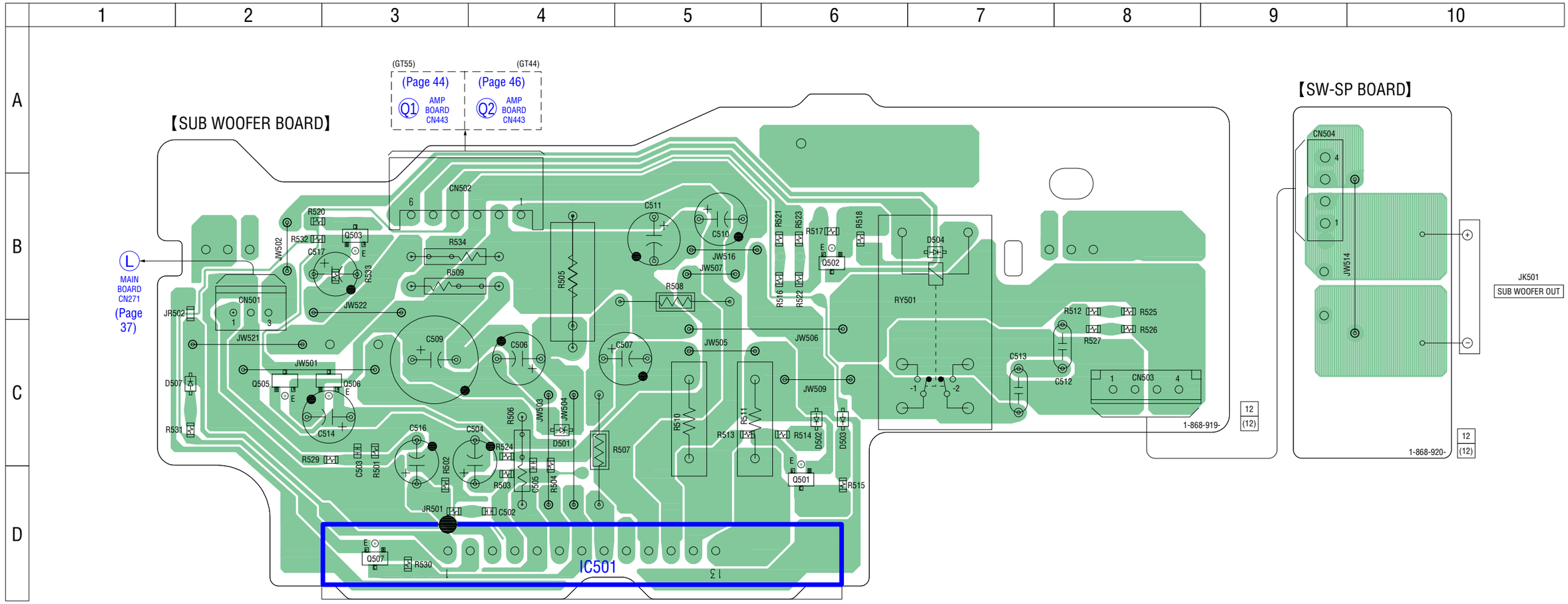

• **Semiconductor Location**

Ref. No.	Location
D501	C-4
D502	C-6
D503	C-6
D504	B-7
D507	C-2
IC501	D-4
Q501	D-6
Q502	B-6
Q503	B-3
Q505	C-2
Q506	C-3
Q507	D-3

7-25. SCHEMATIC DIAGRAM – SUB WOOFER Section (GT44/GT55) – • See page 58 for IC Block Diagrams.

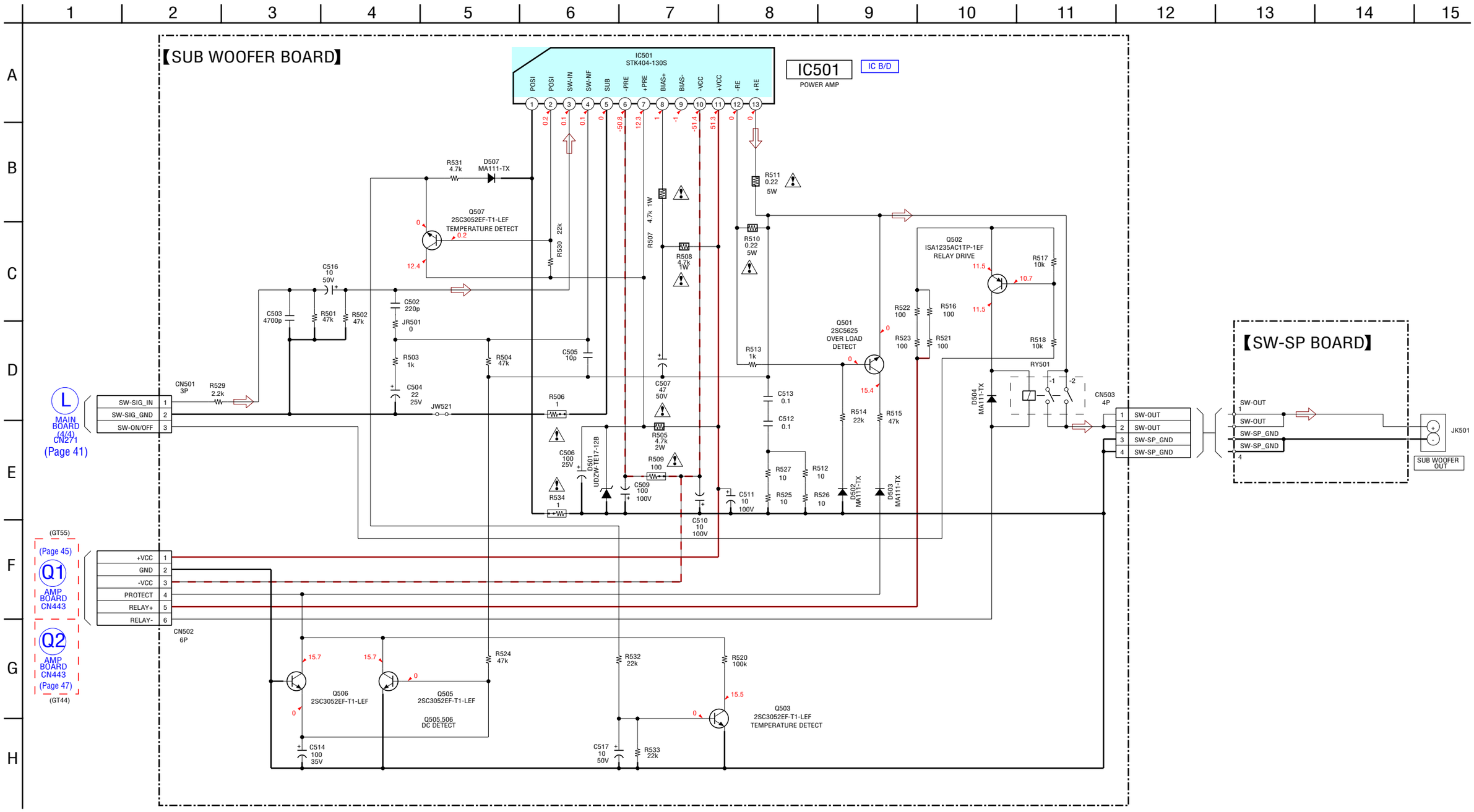

7-26. PRINTED WIRING BOARDS – PANEL Section –

• See page 27 for Circuit Boards Location. : Uses unleaded solder.

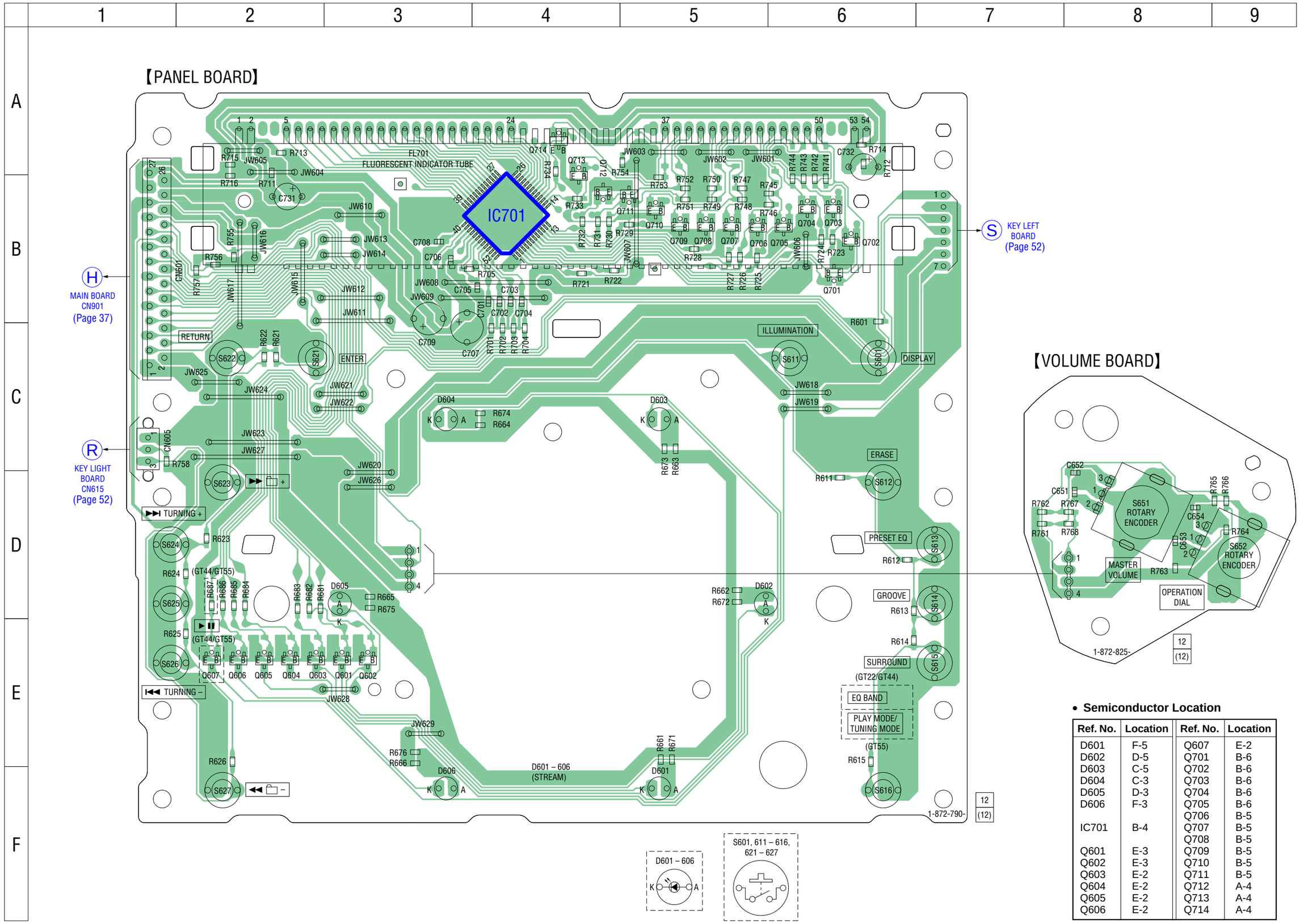

• **Semiconductor Location**

Ref. No.	Location	Ref. No.	Location
D601	F-5	Q607	E-2
D602	D-5	Q701	B-6
D603	C-5	Q702	B-6
D604	C-3	Q703	B-6
D605	D-3	Q704	B-6
D606	F-3	Q705	B-6
		Q706	B-5
IC701	B-4	Q707	B-5
		Q708	B-5
Q601	E-3	Q709	B-5
Q602	E-3	Q710	B-5
Q603	E-2	Q711	B-5
Q604	E-2	Q712	A-4
Q605	E-2	Q713	A-4
Q606	E-2	Q714	A-4

7-27. SCHEMATIC DIAGRAM – PANEL Section –

• See page 36 for Waveforms. • See page 58 for IC Block Diagrams.

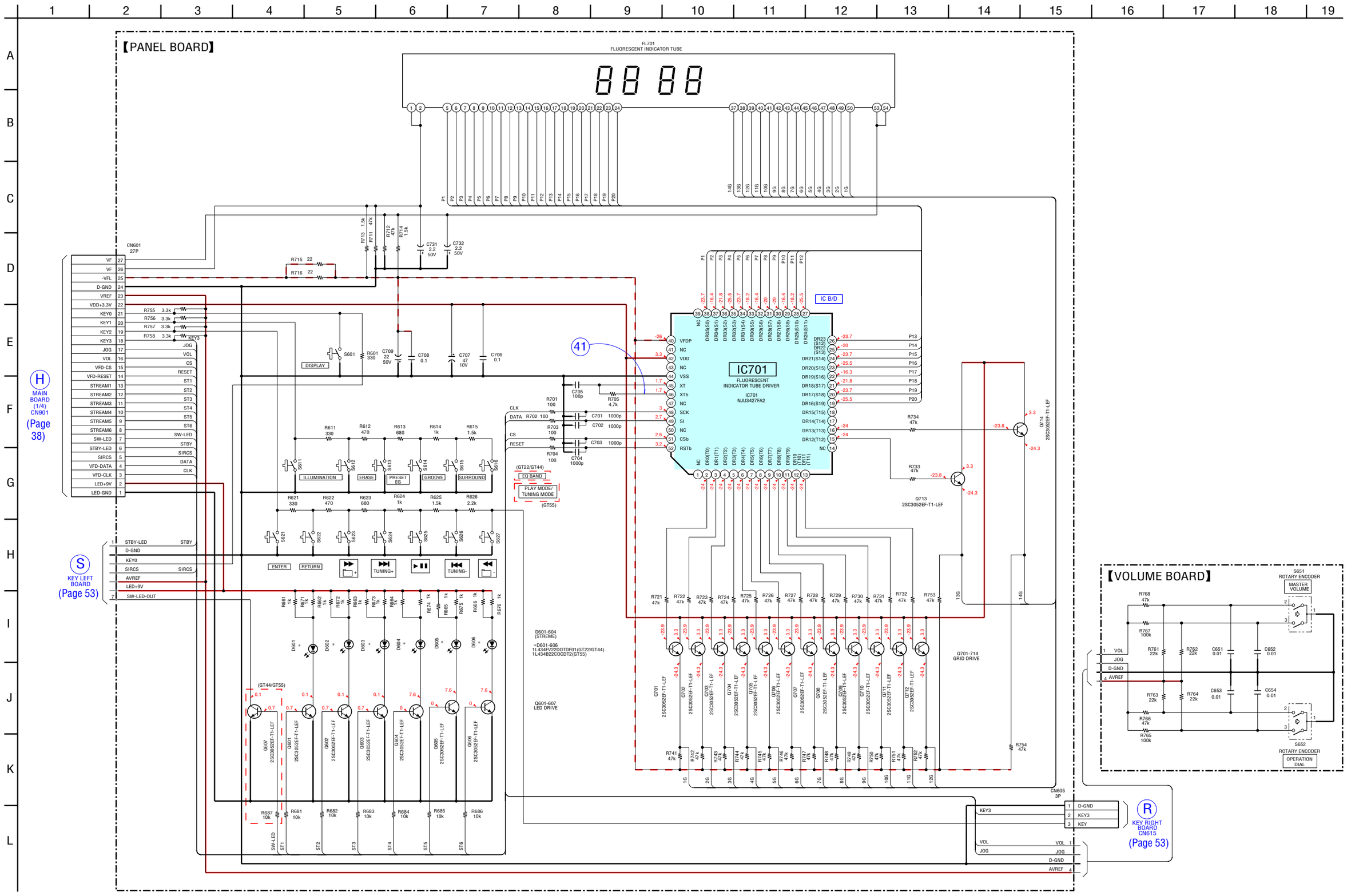

7-28. PRINTED WIRING BOARDS – KEY Section –

• See page 27 for Circuit Boards Location. : Uses unleaded solder.

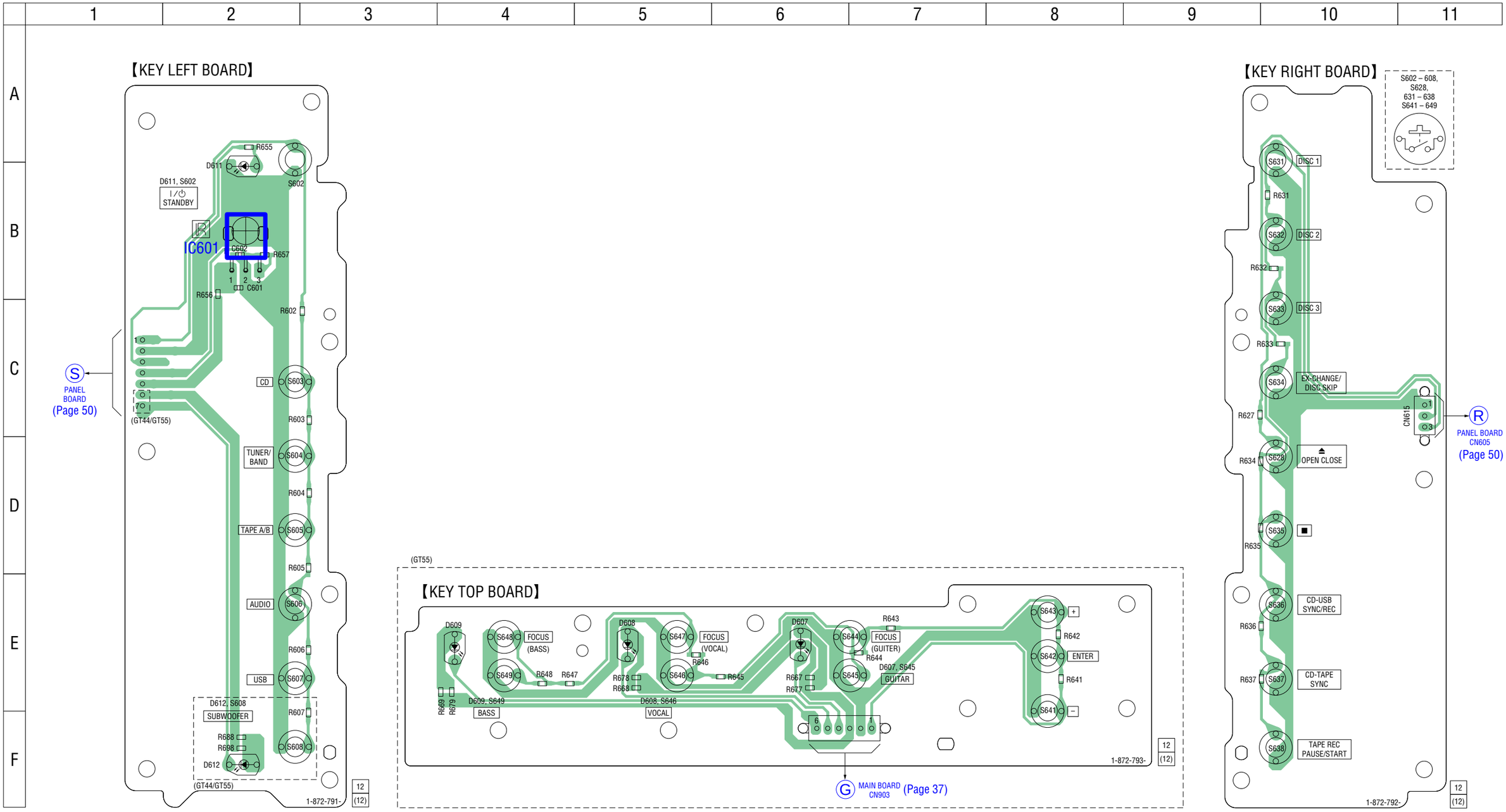

• **Semiconductor Location**

Ref. No.	Location
D607	A-4
D608	A-2
D609	A-1
D611	D-2
D612	H-2
IC601	D-2

7-29. SCHEMATIC DIAGRAM – KEY Section –

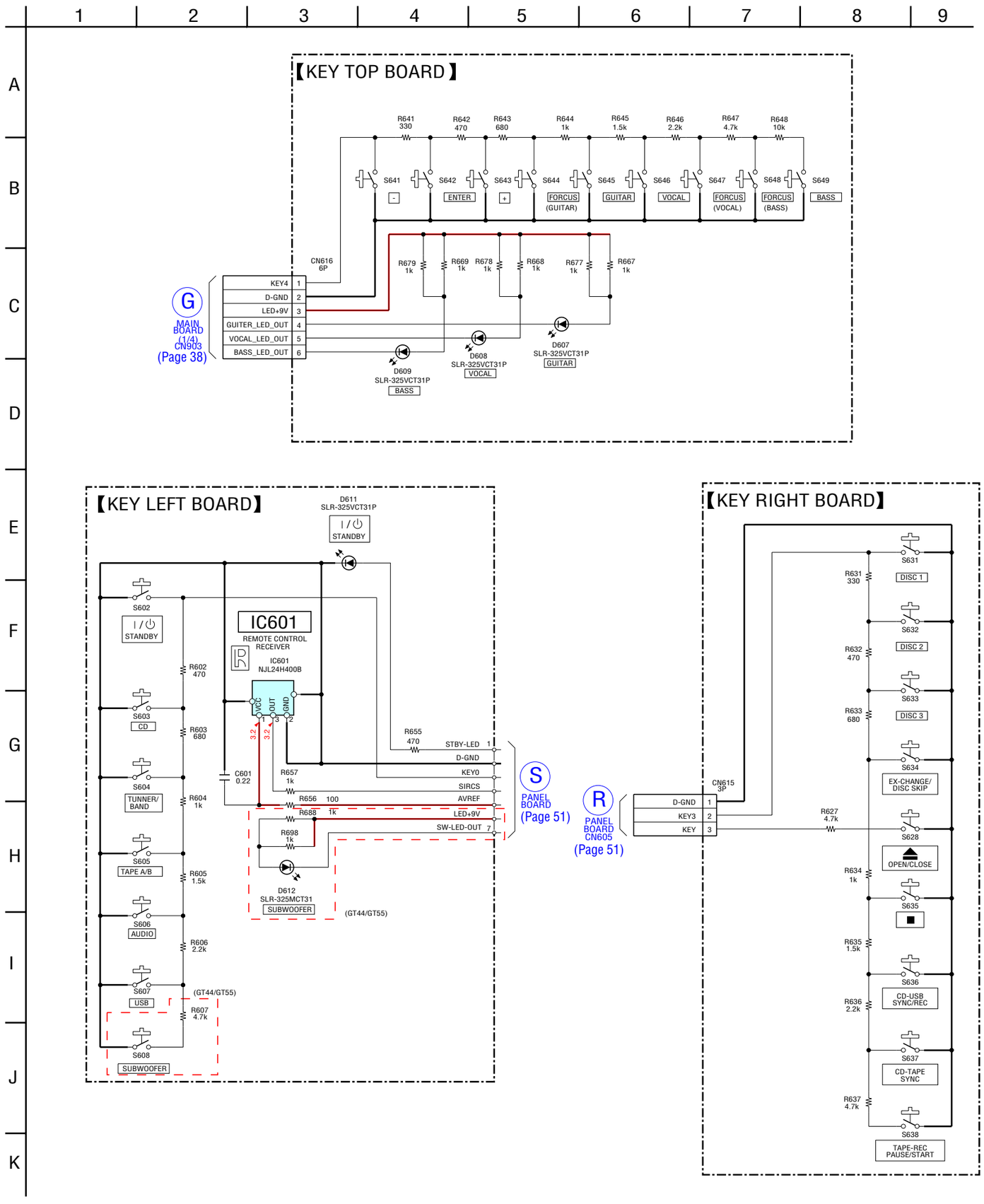

7-30. PRINTED WIRING BOARD – TRANS Board (GT22/GT55) –

• See page 27 for Circuit Boards Location. : Uses unleaded solder.

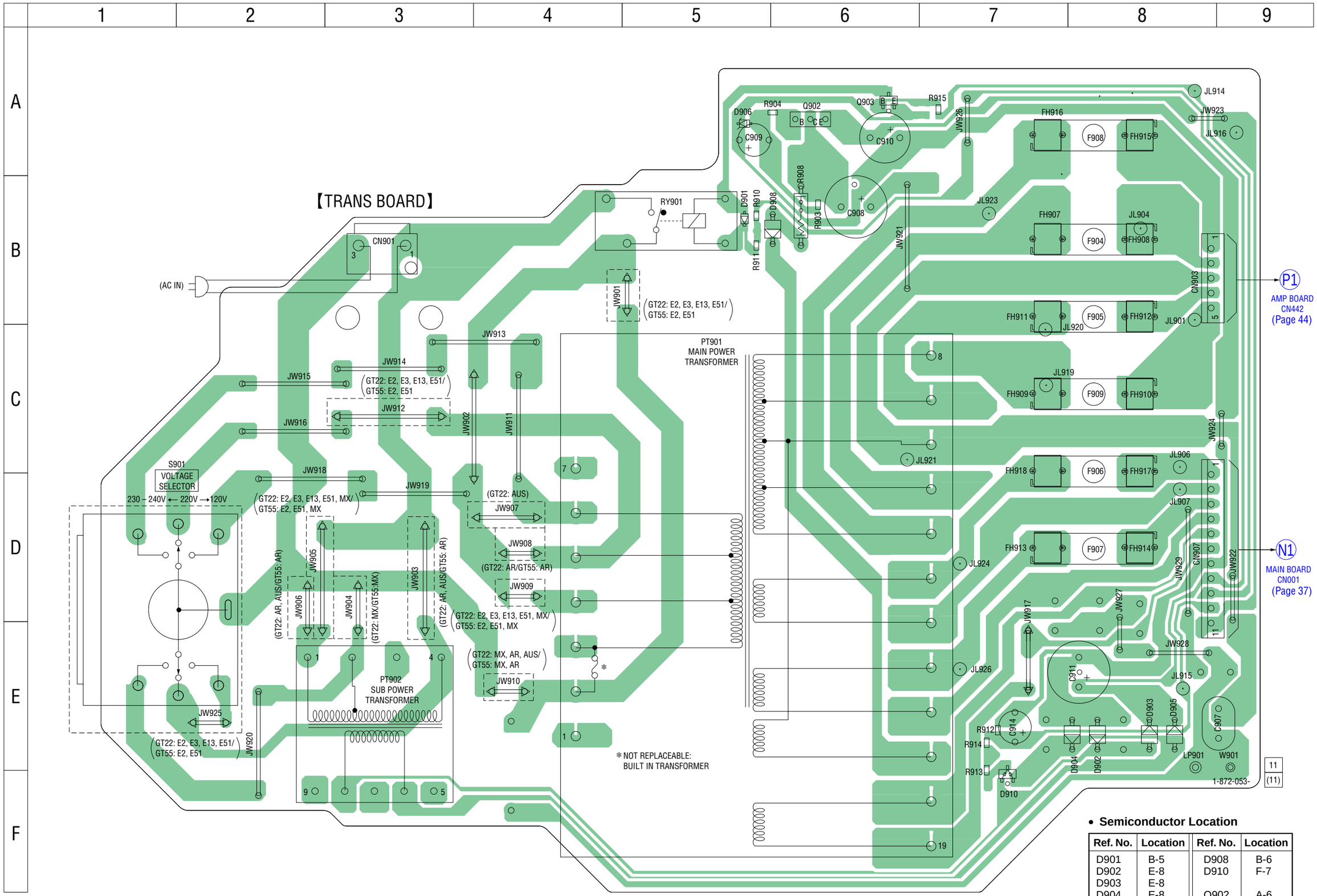

• **Semiconductor Location**

Ref. No.	Location	Ref. No.	Location
D901	B-5	D908	B-6
D902	E-8	D910	F-7
D903	E-8		
D904	E-8	Q902	A-6
D905	E-8	Q903	A-6
D906	A-5		

7-31. SCHEMATIC DIAGRAM – TRANS Board (GT22/GT55) –

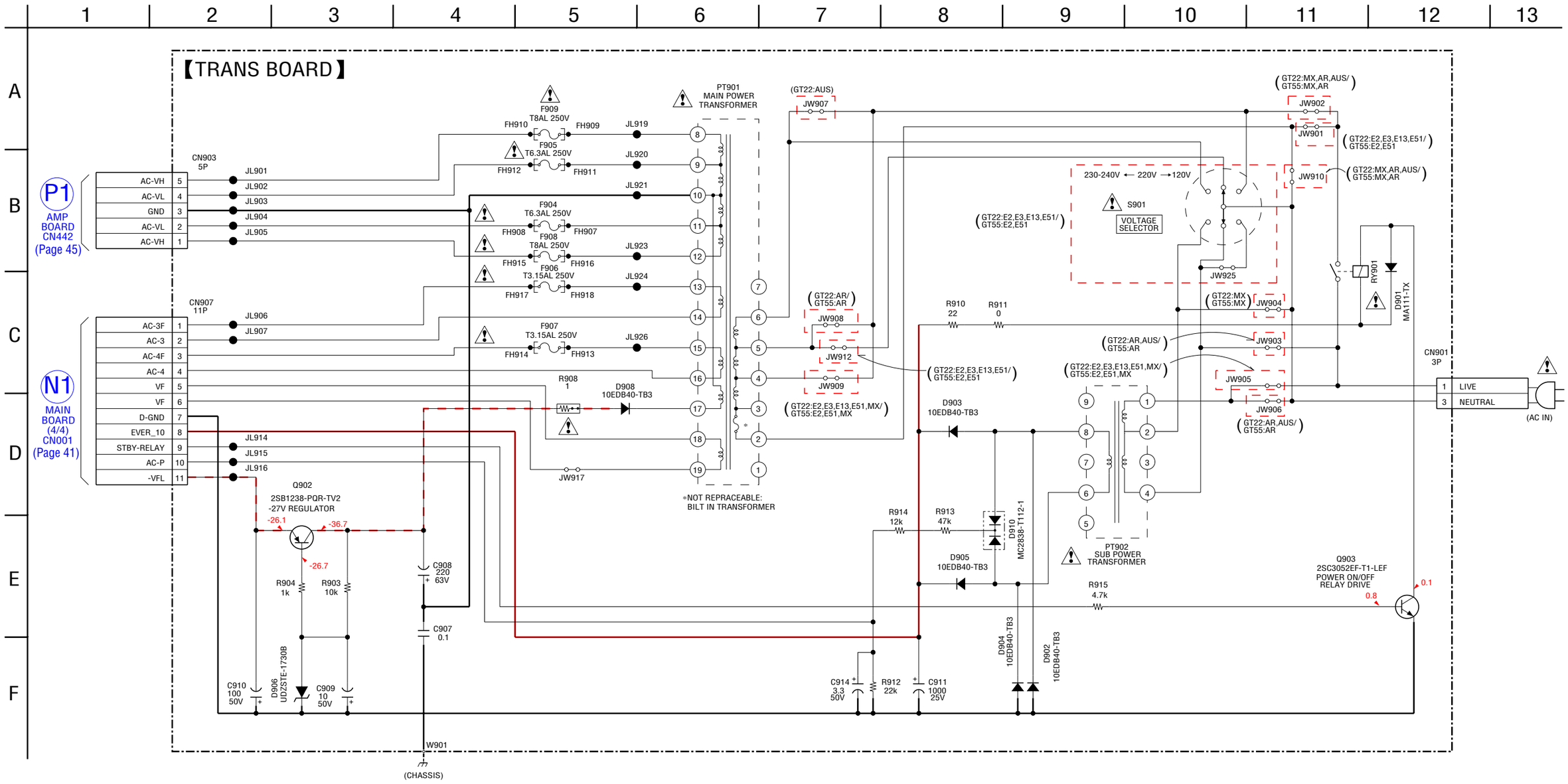

7-32. PRINTED WIRING BOARD – TRANS Board (GT44) –

• See page 27 for Circuit Boards Location. : Uses unleaded solder.

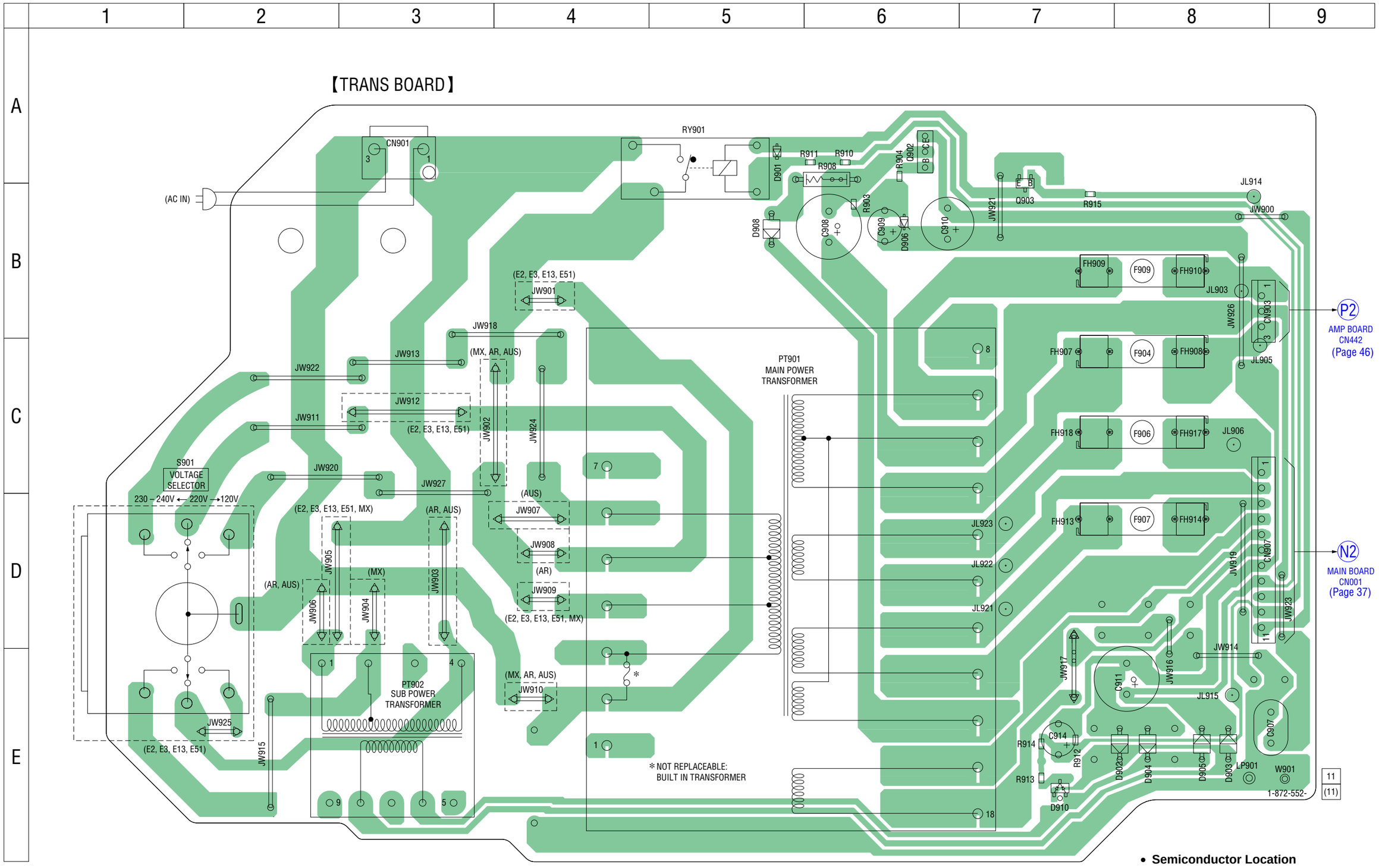

• **Semiconductor Location**

Ref. No.	Location	Ref. No.	Location
D901	A-5	D908	B-5
D902	E-8	D910	E-7
D903	E-8		
D904	E-8	Q902	A-6
D905	E-8	Q903	B-7
D906	B-6		

7-33. SCHEMATIC DIAGRAM – TRANS Board (GT44) –

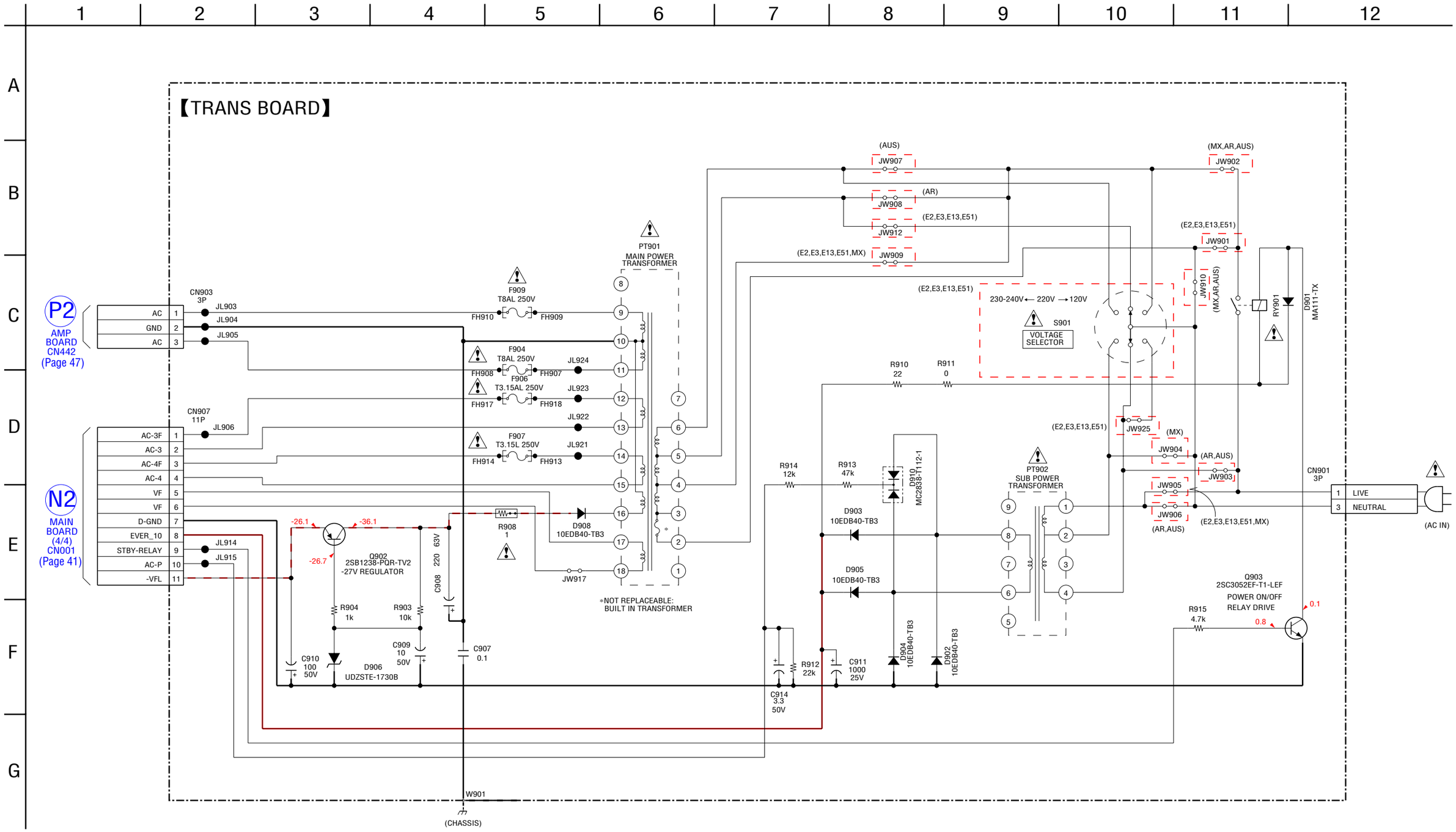

- **IC Block Diagrams**

– CD Board –

IC201 TK63115SCL-G@GL

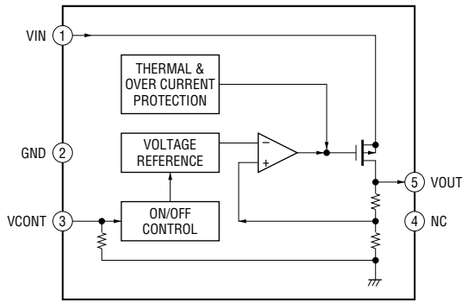

IC401 BA5826SFP-E2

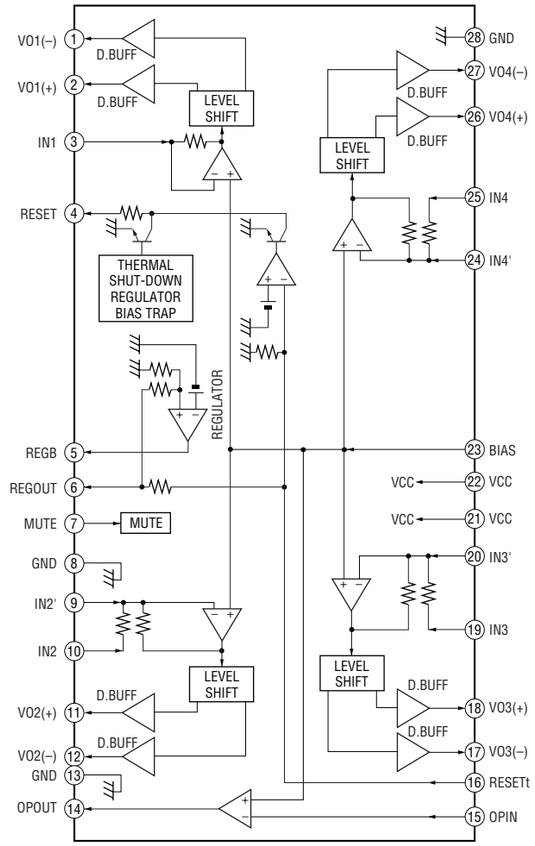

– MAIN Board –

IC102 R2S15208SP

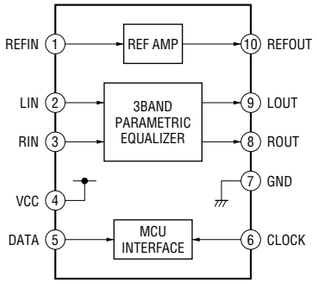

IC103 R2S15207FP

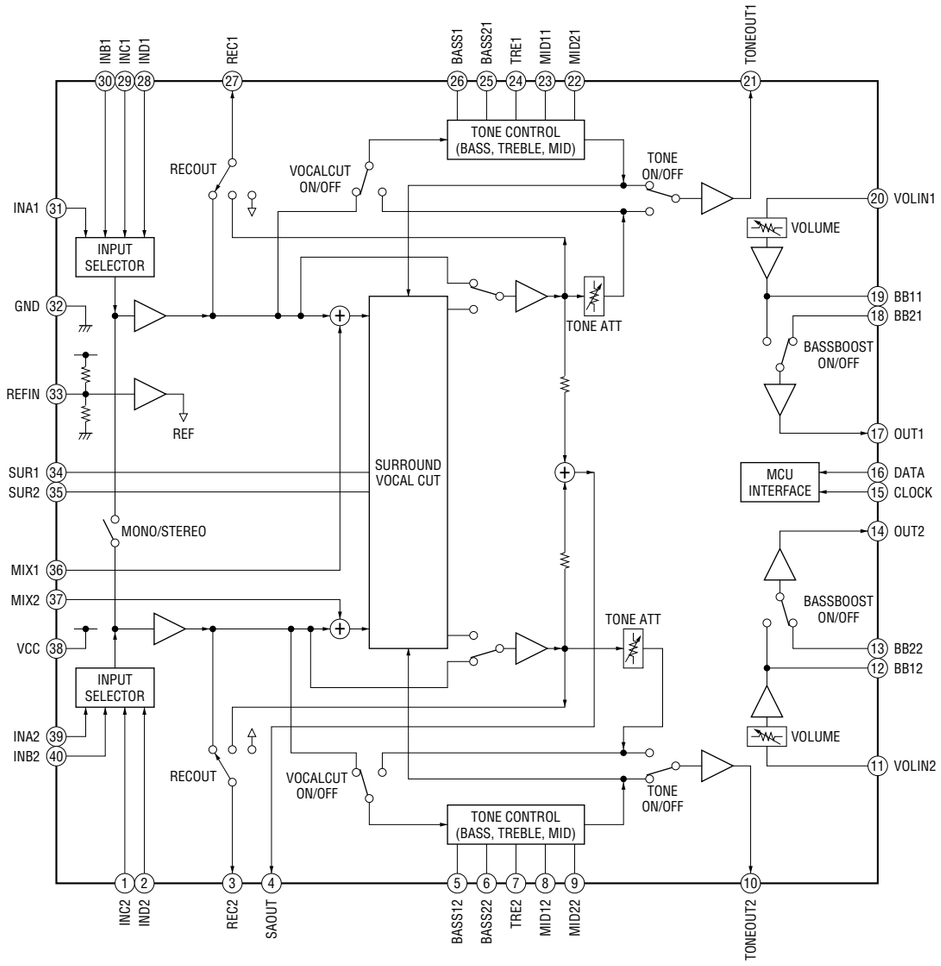

– DRIVER Board –

IC701, 712 BA6956AN

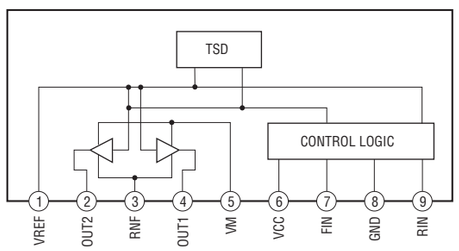

– USB Board –

IC915 R5523N001B-TR-F

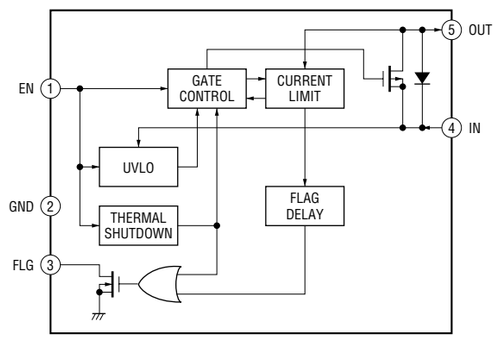

IC301, 302 TC74HC4066AFT (EL)

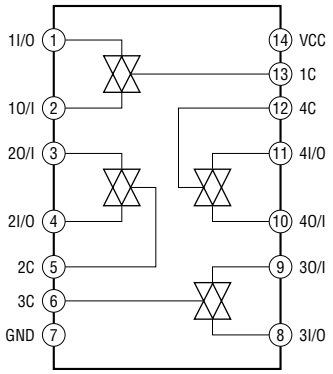

IC303 TC74VHC157FT (EKJ)

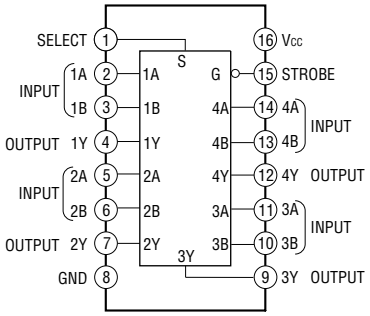

– AMP Board –

IC441 STK415-130-E (GT22/GT55)

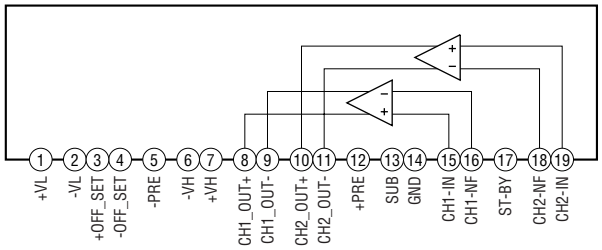

IC441 STK403-130-M-E (GT44)

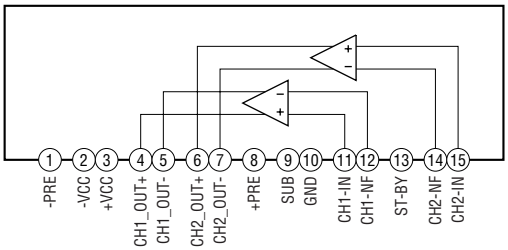

– SUB WOOFER Board –

IC501 STK404-130S (GT44/GT55)

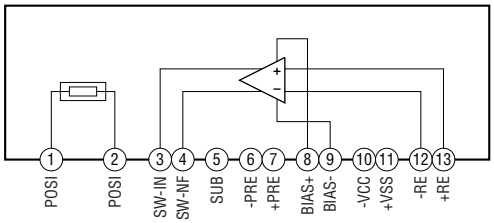

– PANEL Board –

IC701 NJU3427FA2

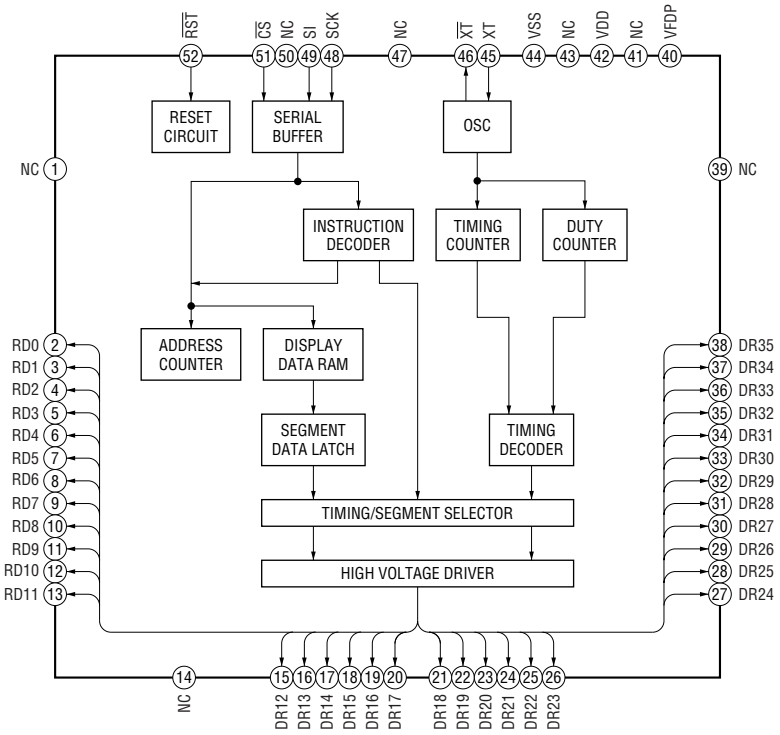

- **IC Pin Function Description**

CD BOARD IC101 TC94A70FG-008 (S, D) (CD-MP3 PROCESSOR)

Pin No.	Pin Name	I/O	Description
1	AVSS3	-	Ground terminal
2	RFZi	I	RF ripple zero crossing signal input terminal
3	RFRP	O	RF ripple signal output terminal
4	SBAD/RFDC	O	Sub beam addition signal or RF peak detection signal output terminal Not used
5	FEi	O	Focus error signal output terminal Not used
6	TEi	O	Tracking error signal output terminal
7	TEZi	I	Tracking error zero crossing signal input terminal
8	AVDD3	-	Power supply terminal (+3.3 V)
9	FOo	O	Focus coil drive signal output terminal
10	TRo	O	Tracking coil drive signal output terminal
11	VREF	I	Reference voltage (+1.65V) input terminal
12	FMo	O	Sled motor drive signal output terminal
13	DMo	O	Spindle motor drive signal output terminal
14	VSSP3	-	Ground terminal
15	VCOi	I	VCO control voltage input terminal
16	VDDP3	-	Power supply terminal (+3.3 V)
17	VDD1	-	Power supply terminal (+1.5 V)
18	VSS	-	Ground terminal
19	FGiN	I	FG signal input terminal Not used
20	IO0 (/HSO)	I	Disc inner position detection signal input terminal
21	IO1 (/UHSO)	O	Not used
22	XVSS3	-	Ground terminal
23	XI	I	System clock input terminal (16.9344 MHz)
24	XO	O	System clock output terminal (16.9344 MHz)
25	XVDD3	-	Power supply terminal (+3.3 V)
26	DVSS3	-	Ground terminal
27	RO	O	Analog audio (R-ch) signal output terminal
28	DVDD3	-	Power supply terminal (+3.3 V)
29	DVR	O	Reference voltage (+1.65V) output terminal
30	LO	O	Analog audio (L-ch) signal output terminal
31	DVSS3	-	Ground terminal
32	VDDT3	-	Power supply terminal (+3.3 V)
33	VSS1	-	Ground terminal
34	VDD1	-	Power supply terminal (+1.5 V)
35	VDDM1	-	Power supply terminal (+1.5 V)
36	SRAMSTB	I	S-RAM standby mode control signal input terminal Fixed at "L" in this set
37	XRST	I	Reset signal input from the system controller "L": reset
38, 39	BUS0, BUS1	I/O	Serial data input/output from the system controller or USB controller
40	BUS2 (SO)	I/O	Serial data input/output from the system controller or USB controller
41	BUS3 (SI)	I/O	Serial data input/output from the system controller or USB controller
42	BUCK (CLK)	I	Serial data transfer clock signal input from the system controller or USB controller
43	XCCE	I	Chip enable signal input from the system controller or USB controller
44	TEST	I	Setting terminal for test mode Normally fixed at "L"
45	IRQ	I	Interrupt request signal input terminal Not used
46	AoUT3 (PO4)	O	Request signal output to the USB controller
47	AoUT2 (PO5)	O	Audio data output to the USB controller

Pin No.	Pin Name	I/O	Description
48	PIO0	O	Request signal output to the system controller or USB controller
49, 50	PIO1, PIO2	O	Not used
51	PIO3	I	Gate signal input from the USB controller
52	VSS1	-	Ground terminal
53	VDDT3	-	Power supply terminal (+3.3 V)
54	SBSY	O	Subcode block sync signal output to the system controller
55	SBOK/FOK	O	Not used
56	IPF	O	Not used
57	SFSY/LOCK	O	Not used
58	ZDET	O	Zero detection signal output terminal Not used
59	GPIN	I	Not used
60	MS	I	Microcomputer interface mode selection signal input terminal Fixed at "H" in this set
61	DOUT (PO6)	O	Digital audio data output terminal Not used
62	AOUT (PO7)	O	Audio data output terminal Not used
63	BCK (PO8)	O	Bit clock signal output to the USB controller
64	LRCK (PO9)	O	L/R sampling clock signal output terminal Not used
65	AIN (PI4)	I	Digital audio data input from the USB controller
66	BCKi (PI5)	I	Bit clock signal input from the USB controller
67	LRCKi (PI6)	I	L/R sampling clock signal input from the USB controller
68	VDD1	-	Power supply terminal (+1.5 V)
69	VSS	-	Ground terminal
70	AWRC	-	Not used
71	PVDD3	-	Power supply terminal (+3.3 V)
72	PDO	O	Phase error margin signal between EFM signal and PLCK signal output terminal
73	TMAXS	O	TMAX detection signal output terminal Not used
74	TMAX	O	TMAX detection signal output terminal
75	LPFN	I	Inverted signal input from the operation amplifier for PLL loop filter
76	LPFo	O	Signal output from the operation amplifier for PLL loop filter
77	PVREF	I	Reference voltage (+1.65V) input terminal
78	VCOF	O	VCO filter output terminal
79	PVSS3	-	Ground terminal
80	SLCo	O	EFM slice level output terminal
81	RFi	I	RF signal input terminal
82	RFRPi	I	RF ripple signal input terminal
83	RFEQo	O	EFM slice level output terminal
84	VRo	O	Reference voltage (+1.65V) output terminal
85	RESiN	O	External resistor connection terminal
86	VMDiR	O	Reference voltage (+1.65V) output terminal for automatic power control circuit
87	TESTR	O	Low-pass filter terminal for RFEQO offset correction
88	AGCi	I	RF signal amplitude adjustment amplification input terminal
89	RFo	O	RF signal generation amplification output terminal
90	RVDD3	-	Power supply terminal (+3.3 V)
91	LDo	O	Laser diode on/off control signal output to the automatic power control circuit "H": laser diode on
92	MDi	I	Light amount monitor input from the laser diode of optical pick-up block
93	RVSS3	-	Ground terminal
94	FNi2 (C)	I	Main beam (C) input from the optical pick-up block

Pin No.	Pin Name	I/O	Description
95	FNi1 (A)	I	Main beam (A) input from the optical pick-up block
96	FPi2 (D)	I	Main beam (D) input from the optical pick-up block
97	FPi1 (B)	I	Main beam (B) input from the optical pick-up block
98	TPi (F)	I	Sub beam (F) input from the optical pick-up block
99	TNPC	O	External capacitor connection terminal
100	TNi (E)	I	Sub beam (E) input from the optical pick-up block

USB BOARD IC901 TMP92CD28AFG-2CB4 (USB CONTROLLER)

Pin No.	Pin Name	I/O	Description
1	/RESET	I	Reset signal input from the system controller "L": reset
2	DI	I	Ready to send signal input from the system controller
3, 4	NO USE	O	Not used
5	G-3	I	Function selection signal input terminal Fixed at "H" in this set
6	DVCC	-	Power supply terminal (+3.3 V)
7 to 9	NO USE	O	Not used
10	DVSS	-	Ground terminal
11	DVCC	-	Power supply terminal (+3.3 V)
12	RVOUT1	O	Reference voltage (+3.3 V) output terminal
13, 14	RVIN	I	Reference voltage (+3.3 V) input terminal
15	RVOUT2	O	Reference voltage (+3.3 V) output terminal
16	DVCC	-	Power supply terminal (+3.3 V)
17	DVSS	-	Ground terminal
18 to 25	D0 to D7	I/O	Two-way data bus with the S-RAM
26	DVSS	-	Ground terminal
27	DVCC	-	Power supply terminal (+3.3 V)
28 to 35	D8 to D15	I/O	Two-way data bus with the S-RAM
36	A0	O	Address signal output terminal Not used
37 to 43	A1 to A7	O	Address signal output to the S-RAM
44	DVSS	-	Ground terminal
45	DVCC	-	Power supply terminal (+3.3 V)
46 to 54	A8 to A16	O	Address signal output to the S-RAM
55 to 58	BUS0 to BUS3	O	Serial data output to the CD-MP3 processor
59	/BUCK	O	Serial data transfer clock signal output to the CD-MP3 processor
60	/CCE	O	Chip enable signal output to the CD-MP3 processor
61	NO USE	O	Not used
62	DVSS	-	Ground terminal
63	DVCC	-	Power supply terminal (+3.3 V)
64	RD	O	Output enable signal output to the S-RAM
65	WR	O	Write enable signal output to the S-RAM
66	SRLLB	O	Lower-byte control signal output to the S-RAM
67	SRLUB	O	Upper-byte control signal output to the S-RAM
68	NO USE	O	Not used
69	BOOT	I	Boot mode selection signal input terminal "L": boot mode
70	CS2	O	Chip select signal output to the S-RAM
71	LRCK	O	L/R sampling clock signal output to the CD-MP3 processor
72	AM1	I	Function mode selection signal input terminal Fixed at "H" in this set
73	X2	O	System clock output terminal (9 MHz)
74	DVSS	-	Ground terminal
75	X1	I	System clock input terminal (9 MHz)
76	DVCC	-	Power supply terminal (+3.3 V)
77	USBOC	I	Over current detection signal input terminal
78	USBPON	O	USB power (VBUS) on/off control signal output terminal "H": power on
79	D+	I/O	Two-way data (positive) bus from the USB connector
80	D-	I/O	Two-way data (negative) bus from the USB connector
81	AM0	I	Function mode selection signal input terminal Fixed at "H" in this set

Pin No.	Pin Name	I/O	Description
82	NO USE	O	Not used
83	DVSS	-	Ground terminal
84	DO	O	Clear to send signal output to the system controller
85	DATA	I	Audio data input from the CD-MP3 processor
86	CLOCK	I	Audio data transfer clock signal input from CD-MP3 processor
87	TXD1	O	Serial data output to the system controller
88	RXD1	I	Serial data input from the system controller
89	NO USE	O	Not used
90	SDA	I/O	Two-way EEPROM IIC data bus terminal Not used
91	SCL	I/O	Two-way EEPROM IIC clock bus terminal Not used
92	BCK	O	Bit clock signal output to the CD-MP3 processor
93	DATA	O	Audio data output to the CD-MP3 processor
94	GATE	O	Gate signal output to the CD-MP3 processor
95	DVCC	-	Power supply terminal (+3.3 V)
96	REQ	I	Request signal input from the CD-MP3 processor
97	ST-REQ	I	Request signal input from the CD-MP3 processor
98, 99	G-1, G-2	I	Function selection signal input terminal Fixed at "H" in this set
100	DVSS	-	Ground terminal

MAIN BOARD IC901 uPD78F1165GF (S)-GAS-AX (SYSTEM CONTROLLER)

Pin No.	Pin Name	I/O	Description
1	O-SYS-MUTE	O	Muting on/off control signal output terminal "L": muting on
2	O-SWR	O	Sub woofer speaker on/off relay drive signal output terminal (GT44/GT55)
3	O-FRONT-SP-RELAY	O	Power on/off control signal output for speaker relays
4	O-CD-POWER	O	Power on/off control signal output for CD block
5	O-POWER-RELAY	O	Power on/off relay drive signal output terminal "H": power on
6	CD XRST	O	Reset signal output to the CD-MP3 processor "L": reset
7	CD-M-MUTE	O	Muting signal output to the coil/motor driver
8	O-USB-POWER	O	Power on/off control signal output for USB block
9	I-USB-CTS (DI)	I	Clear to send signal input from the USB controller
10	O-USB-RTS (DO)	O	Ready to send signal output to the USB controller
11	O-USB-RESET	O	Reset signal output to the USB controller "L": reset
12	CD-BUCK	O	Serial data transfer clock signal output to the CD-MP3 processor
13	CD-CCE	O	Chip enable signal output to the CD-MP3 processor
14 to 17	CD-BUS3 (I/O) to CD-BUS0 (I/O)	I/O	Two-way data bus with the CD-MP3 processor
18	MP3 IREQ	I	Request signal input from the CD-MP3 processor
19	CD-SEL1	O	Data selection signal output terminal
20	EVSS1	-	Ground terminal
21	CD-SEL2	O	Data selection signal output terminal
22	O-LM-R	O	Loading motor control signal output terminal (reverse direction)
23	O-LM-F	O	Loading motor control signal output terminal (forward direction)
24	O-TM-R	O	Table motor control signal output terminal (reverse direction)
25	O-TM-F	O	Table motor control signal output terminal (forward direction)
26	I-CD-SENS	I	Disc table address sensor input terminal
27	I-OPEN-SW	I	Disc table open/close detection switch input terminal "L": open, "H": close
28	O-LC72121-CE	O	Chip enable signal output to the tuner (FM/AM)
29	I-SBSY	I	Subcode block sync signal input from the CD-MP3 processor
30	EVDD1	-	Power supply terminal (+3.3V)
31	I-LV23004T-DI	I	Serial data input from the tuner (FM/AM)
32	O-LV23004T -CLK	O	Serial data transfer clock signal output to the tuner (FM/AM)
33	O-LV23004T-DO	O	Serial data output to the tuner (FM/AM)
34	I-TUNED	I	Tuning detection signal input from the tuner
35	I-AC-CUT	I	AC power off detection signal input terminal
36	O-STK-MUTE	O	Standby signal output to the power amplifier (for front speaker)
37	O-USB-LED	O	LED drive signal output terminal for REC (USB) indicator "H": LED on
38	O-G-LED	O	LED drive signal output terminal for GUITAR indicator "H": LED on
39	O-V-LED	O	LED drive signal output terminal for VOCAL indicator "H": LED on
40	O-B-LED	O	LED drive signal output terminal for BASE indicator "H": LED on
41	O-F-DATA	O	Serial data output to the electrical volume
42	I-USB-RXD (SI)	I	Serial data input from the USB controller
43	O-USB-TXD (SO)	O	Serial data output to the USB controller
44	O-P-DATA	O	Serial data output to the parametric equalizer (GT55)

Pin No.	Pin Name	I/O	Description
45	O-AUDIO-CLK	O	Serial data transfer clock signal output to the electrical volume and parametric equalizer (GT55) Serial data transfer clock signal output to the electrical volume (GT22/GT44)
46	O-REC/PB	O	Deck-A/B selection and recording/playback selection signal output terminal "L": deck-B and playback, "H": deck-A and recording
47	AVREF1	I	Reference voltage (+3.3V) input terminal
48	O-REC-MUTE	O	Recording muting on/off control signal output terminal "L": muting on
49	O-BIAS	O	Recording bias on/off control signal output terminal "H": bias on
50	AVREF0	I	Reference voltage (+3.3V) input terminal
51	AVSS	-	Ground terminal
52	I-USB-MONI	I	USB power (VBUS) monitoring input terminal
53	I-SUFIX	I	Setting terminal for the destination
54	I-MODEL	I	Setting terminal for model discrimination
55	I-ENCD	I	Disc table address sensor (rotary encoder) input terminal (A/D input)
56	I-KEY4	I	Front panel key input terminal (A/D input) (GT55)
57	I-PROTECTOR	I	AC power detection signal input, and protect signal input terminal
58	I-HP/MIC	I	Headphone and microphone plug insert detection signal input terminal (A/D input)
59	I-VACS	I	VACS signal input terminal (A/D input)
60	I-TAPE-STAT	I	Deck-A/B cassette detection signal input from the tape mechanism deck block, and Recording-proof detection signal input from the tape mechanism deck block (A/D input)
61 to 64	I-KEY0 to I-KEY3	I	Front panel key input terminal (A/D input)
65	I-JOG	I	Jog dial pulse input from the rotary encoder (multi jog) (A/D input)
66	I-VOL	I	Jog dial pulse input from the rotary encoder (VOLUME) (A/D input)
67	I-STREAM	I	Audio signal input for stream LED (A/D input)
68	O-NJM3427FA2-CS	O	Chip select signal output to the fluorescent indicator tube driver
69	O-NJM3427FA2-RESET	O	System reset signal output to the fluorescent indicator tube driver "L": reset
70 to 75	O-S-LED1 to O-S-LED6	O	LED drive signal output of the stream indicator "H": LED on
76	O-SWR-LED	O	LED drive signal output of the SUBWOOFER indicator "H": LED on (GT44/GT55)
77	O-STBY-LED	O	LED drive signal output terminal for STANDBY indicator "H": LED on
78	I-REEL-A	I	Deck-A tape reel rotating detection signal input from the tape mechanism deck block
79	I-REEL-B	I	Deck-B tape reel rotating detection signal input from the tape mechanism deck block
80	I-RDS-CLK	I	RDS data transfer clock signal input terminal Not used
81	I-SIRCS-IN	I	SIRCS signal input from the remote control receiver
82	NC	-	Not used
83	I-WAKEUPKEY	I	Wake up signal input terminal
84	O-NJM3427A-DATA	O	Serial data output to the fluorescent indicator tube driver
85	O-MOTOR	O	Capstan/reel motor drive signal output terminal "H": motor on
86	O-NJM3427A2-CLK	O	Serial data transfer clock signal output to the fluorescent indicator tube driver
87	O-B-SOL	O	Deck-B side trigger plunger drive signal output terminal "H": plunger on
88	O-A-SOL	O	Deck-A side trigger plunger drive signal output terminal "H": plunger on
89	TOOL0	I	Not used
90	RESET	I	System reset signal input from the reset signal generator "L": reset For several hundreds msec. after the power supply rises, "L" is input, then it changes to "H"

Pin No.	Pin Name	I/O	Description
91	XT2	O	Sub system clock output terminal (32.768 kHz)
92	XT1	I	Sub system clock input terminal (32.768 kHz)
93	FLMD0	I	Not used
94	X2	O	Main system clock output terminal (20 MHz)
95	X1	I	Main system clock input terminal (20 MHz)
96	REGC	I	External capacitor connection terminal for regulator
97	VSS	-	Ground terminal
98	EVSS0	-	Ground terminal
99	VDD	-	Power supply terminal (+3.3V)
100	EVDD0	-	Power supply terminal (+3.3V)

SECTION 8
EXPLODED VIEWS

NOTE:

- -XX and -X mean standardized parts, so they may have some difference from the original one.
- Color Indication of Appearance Parts
  Example:
  KNOB, BALANCE (WHITE) . . . (RED)
  ↑ Parts Color ↑ Cabinet's Color
- Items marked "*" are not stocked since they are seldom required for routine service. Some delay should be anticipated when ordering these items.
- The mechanical parts with no reference number in the exploded views are not supplied.
- Accessories are given in the last of the electrical parts list.
- Abbreviation
  AR : Argentina model
  AUS : Australian model
  E2 : 120V AC area in E model
  E3 : 240V AC area in E model
  E13 : 220V – 230V AC area in E model
  E51 : Chilean and Peruvian models
  MX : Mexican model

The components identified by mark ⚠ or dotted line with mark ⚠ are critical for safety. Replace only with part number specified.

8-1. CASE SECTION

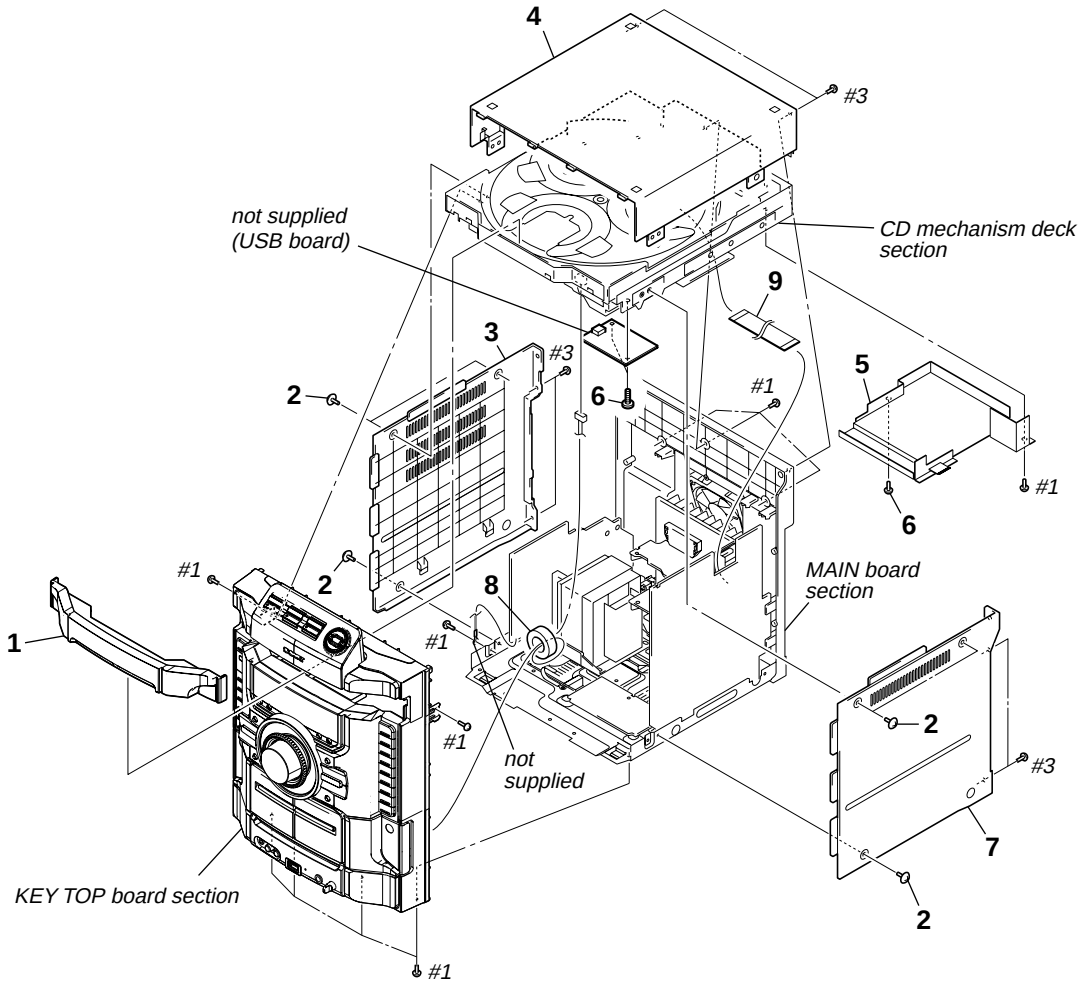

Ref. No.	Part No.	Description	Remark
1	2-892-161-01	PANEL, LOADING (GT22: E2, E51, AR, MX)	
1	2-892-161-11	PANEL, LOADING (GT22: E3, E13, AUS)	
1	2-892-161-21	PANEL, LOADING (GT44: E2, E51, AR, MX)	
1	2-892-161-31	PANEL, LOADING (GT44: E3, E13, AUS)	
1	2-892-161-41	PANEL, LOADING (GT55)	
2	3-363-099-32	SCREW (CASE 3 TP2)	
3	2-599-855-11	CASE (SIDE-L)	
4	2-599-854-11	CASE (TOP)	
5	2-675-793-01	COVER (OP)	
6	3-087-053-01	+BVTP2.6 (3CR)	
7	2-599-856-11	CASE (SIDE-R)	
8	1-500-868-11	CORE, FERRITE	
9	1-832-647-21	CABLE, FLEXIBLE FLAT (27 CORE)	
#1	7-685-646-79	SCREW +BVTP 3X8 TYPE2 IT-3	
#3	7-685-647-79	SCREW +BVTP 3X10 TYPE2 IT-3	

8-2. KEY TOP BOARD SECTION

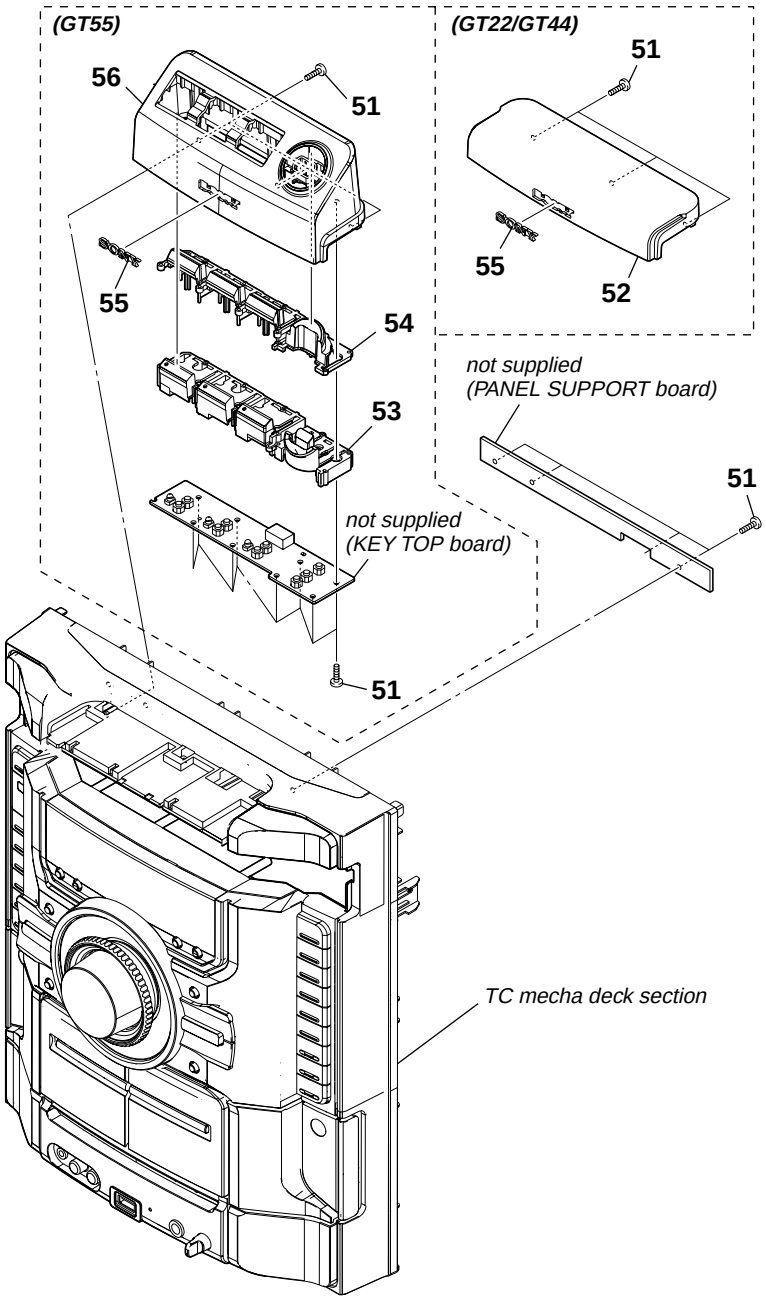

Ref. No.	Part No.	Description	Remark
51	3-087-053-01	+BVTP2.6 (3CR)	
52	2-892-160-01	PANEL (HEAD-B) (GT22/GT44)	
53	X-2179-679-1	BUTTON FOCUS ASSY (BASS, VOCAL, GUITAR, ENTER, –) (GT55)	
54	2-892-297-01	BUTTON (FOCUS) TOP (FOCUS, FOCUS, FOCUS, +) (GT55)	
55	4-217-485-21	EMBLEM (5-A), SONY	
56	2-892-159-01	PANEL (HEAD-A) (GT55)	

8-3. TC MECHA DECK SECTION

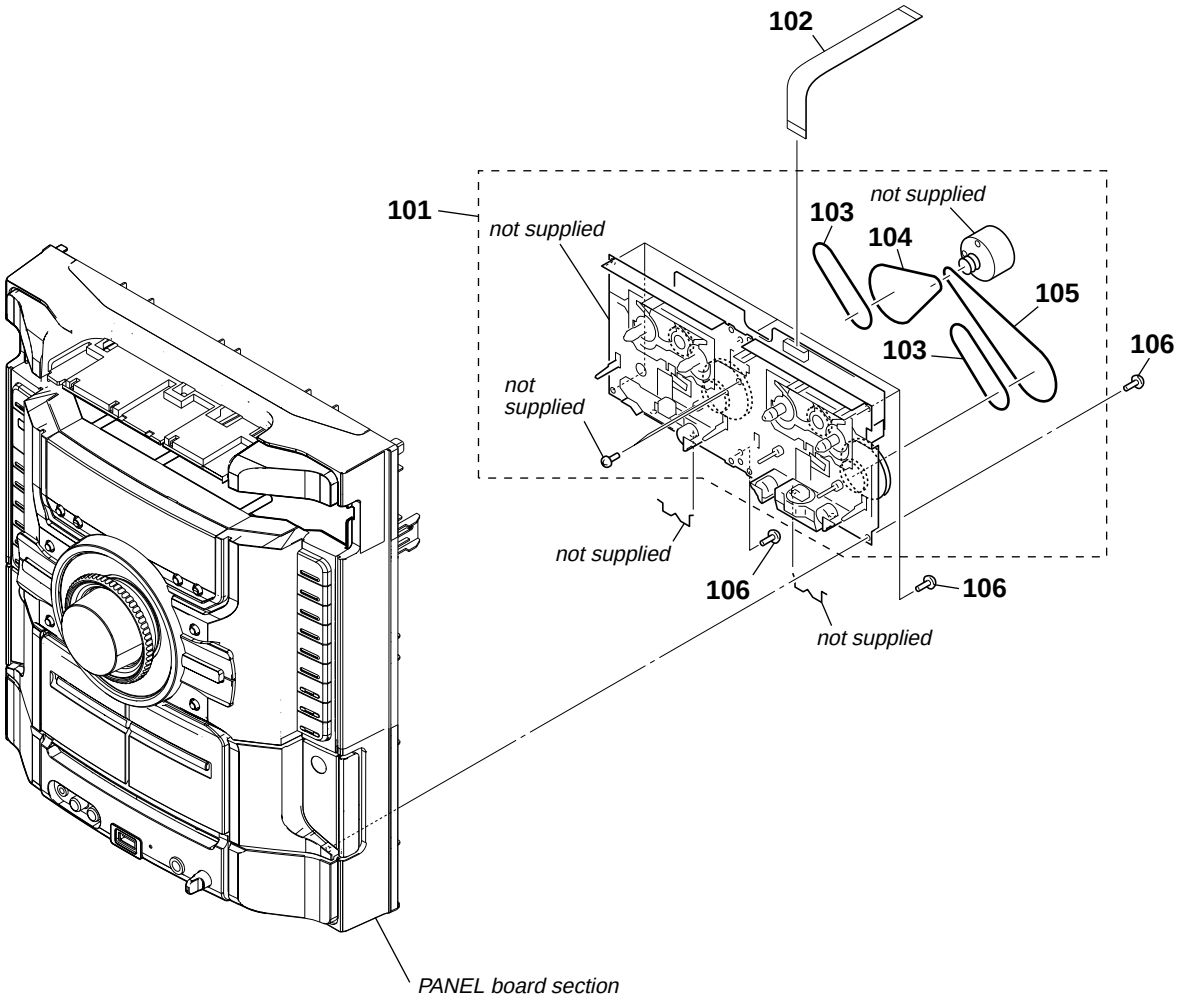

Ref. No.	Part No.	Description	Remark	Ref. No.	Part No.	Description	Remark
101	1-417-656-22	MECHA DECK (CWN42FF609)		105	2-683-560-01	BELT (BF)	
102	1-832-826-21	CABLE, FLEXIBLE FLAT (11 CORE)					
103	4-235-777-01	BELT (FR)		106	3-087-053-01	+BVTP2.6 (3CR)	
104	2-683-559-01	BELT (AF)					

8-4. PANEL BOARD SECTION

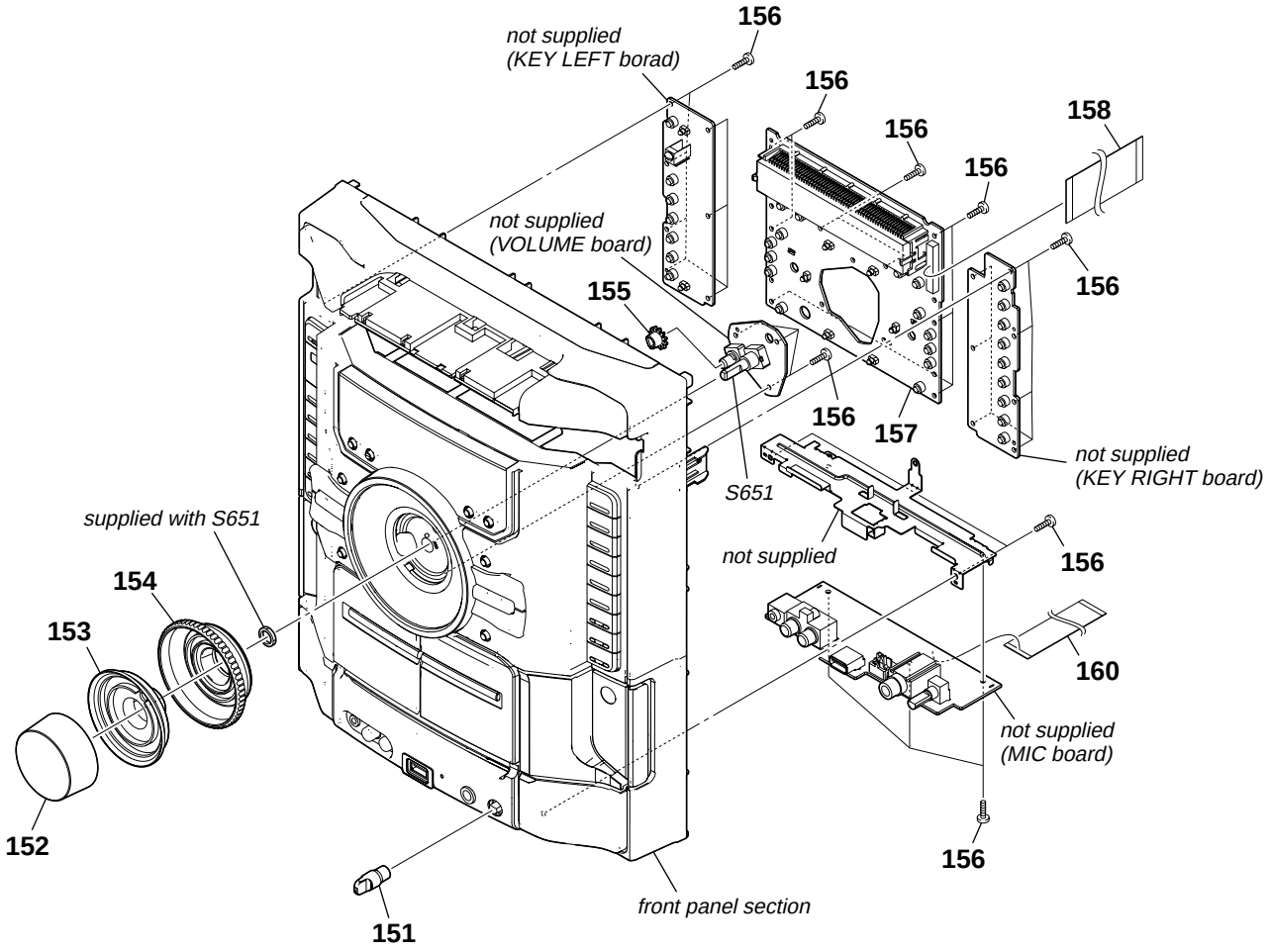

Ref. No.	Part No.	Description	Remark
151	2-638-220-11	KNOB (MIC)	
152	2-892-152-01	KNOB (VOL)	
153	2-892-153-01	PLATE (VOL)	
154	2-892-154-01	KNOB (JOG)	
155	2-892-155-01	GEAR (JOG)	
156	3-087-053-01	+BVTP2.6 (3CR)	
157	A-1234-752-A	PANEL BOARD, COMPLETE (GT55: E2, E51, AR)	
157	A-1234-753-A	PANEL BOARD, COMPLETE (GT44: E2, E3, E13, E51, AR, AUS)	
157	A-1234-754-A	PANEL BOARD, COMPLETE (GT22: E2, E3, E13, E51, AR, AUS)	
157	A-1283-432-A	PANEL BOARD, COMPLETE (GT55: MX)	
157	A-1283-433-A	PANEL BOARD, COMPLETE (GT44: MX)	
157	A-1283-434-A	PANEL BOARD, COMPLETE (GT22: MX)	
158	1-832-907-21	CABLE, FLEXIBLE FLAT (27 CORE)	
160	1-834-336-21	CABLE, FLEXIBLE FLAT (13 CORE)	
S651	1-480-109-11	ENCODER, ROTARY (MASTER VOLUME)	

8-5. FRONT PANEL SECTION

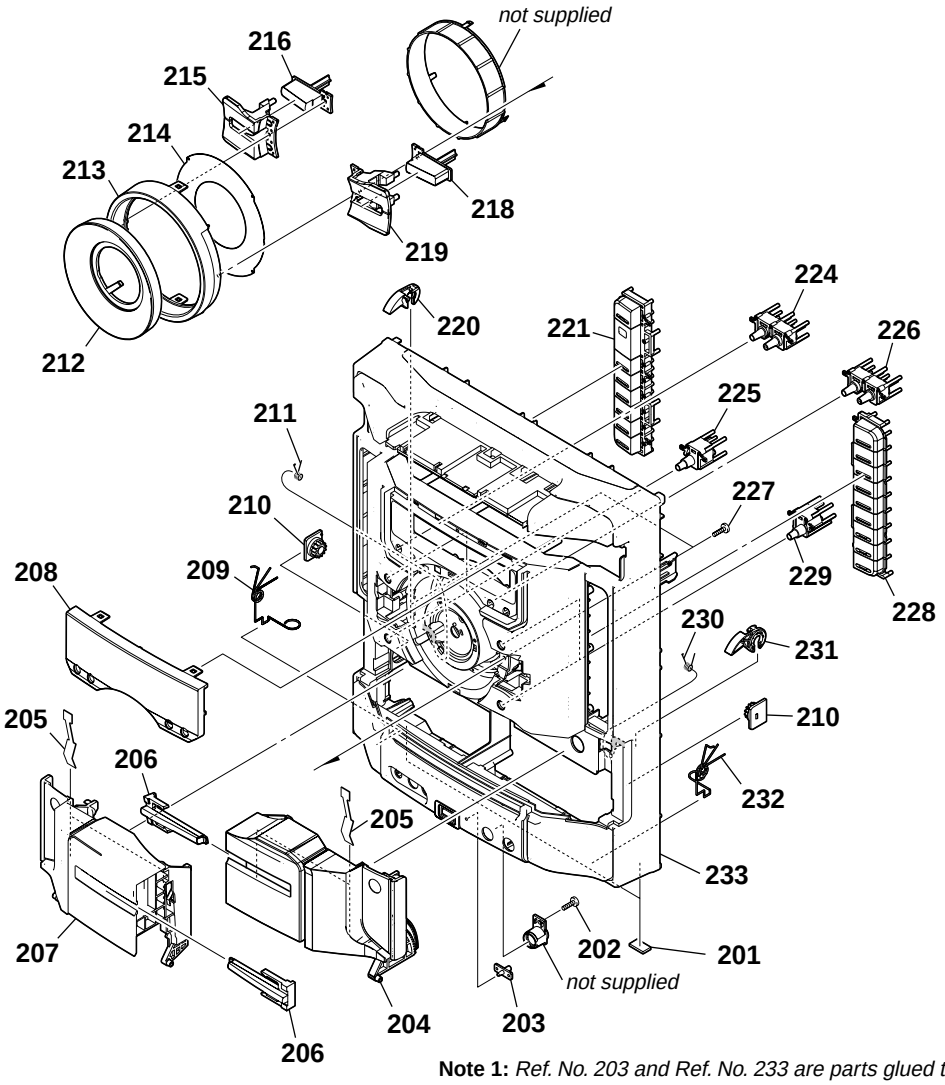

Note 1: *Ref. No. 203 and Ref. No. 233 are parts glued together.*
When you exchange Ref. No. 203 or Ref. No. 233, exchange simultaneously.
Note 2: *Ref. No. 213 and Ref. No. 214 are parts glued together.*
When you exchange Ref. No. 213 or Ref. No. 214, exchange simultaneously.

Ref. No.	Part No.	Description	Remark
201	4-225-252-01	CUSHION (FOOT)	
202	3-087-053-01	+BVTP2.6 (3CR)	
203	2-892-302-01	INDICATOR (USB)	
204	2-892-128-01	LID (TC-R)	
205	2-669-613-01	DETENT SPRING	
206	2-892-129-01	WINDOW (TC)	
207	2-892-127-01	LID (TC-L)	
208	2-892-141-01	WINDOW (DISPLAY) (GT22: E2, E3, E13, E51, AR, MX/GT44: E2, E3, E13, E51, AR, MX/GT55)	
208	2-892-141-11	WINDOW (DISPLAY) (GT22: AUS/GT44: AUS)	
209	2-892-299-01	SPRING (TC-L)	
210	4-224-104-41	DAMPER	
211	4-231-836-01	SPRING (HEART CAM-A)	
212	2-892-144-01	REFLECTOR (LED-CD)	
213	2-892-150-01	RING (CENTER-CD) (GT44/GT55)	
213	2-892-150-11	RING (CENTER-CD) (GT22)	
214	2-892-156-01	SHEET (LED-CD)	
215	2-892-146-01	BUTTON (CENTER A-L) (PRESET EQ, SURROUND)	
216	2-892-148-01	BUTTON (CENTER B-L) (GROOVE)	
218	2-892-149-01	BUTTON (CENTER B-R) (▶II)	
219	2-892-147-01	BUTTON (CENTER A-R) (▶▶I, TUNING, +)	
220	4-231-824-01	CAM (A), HEART	
221	X-2179-680-1	BUTTON POWER ASSY (GT44/GT55) (I/⏻ STANDBY, R ,CD, TUNER/BAND, TAPE A/B, AUDIO, USB, SUBWOOFER) (GT44/GT55)	
221	X-2179-681-1	BUTTON POWER ASSY (GT22) (I/⏻ STANDBY, R , CD, TUNER/BAND, TAPE A/B, AUDIO, USB, SUBWOOFER) (GT22)	
224	2-892-140-01	BUTTON (DISPLAY)	
225	2-892-135-01	BUTTON (ERASE)	
226	2-892-132-01	BUTTON (ENTER)	
227	3-087-053-11	+BVTP2.6 (3CR)	
228	2-892-134-01	BUTTON (CD) (DISC 1, DISC 2, DISC 3, EX-CHANGE/DISC SKIP, ⏏ OPEN/CLOSE, ■, CD-USB SYNC/REC1, CD-TAPE SYNC, TAPE REC PAUSE/START)	
229	2-892-137-01	BUTTON (FOLDER)	
230	4-231-841-01	SPRING (HEART CAM-B)	
231	4-231-825-01	CAM (B), HEART	
232	2-892-300-01	SPRING (TC-R)	
233	2-892-126-01	PANEL, FRONT (GT55)	
233	2-892-126-11	PANEL, FRONT (GT44)	
233	3-209-722-01	PANEL, FRONT (GT22)	

8-6. MAIN BOARD SECTION

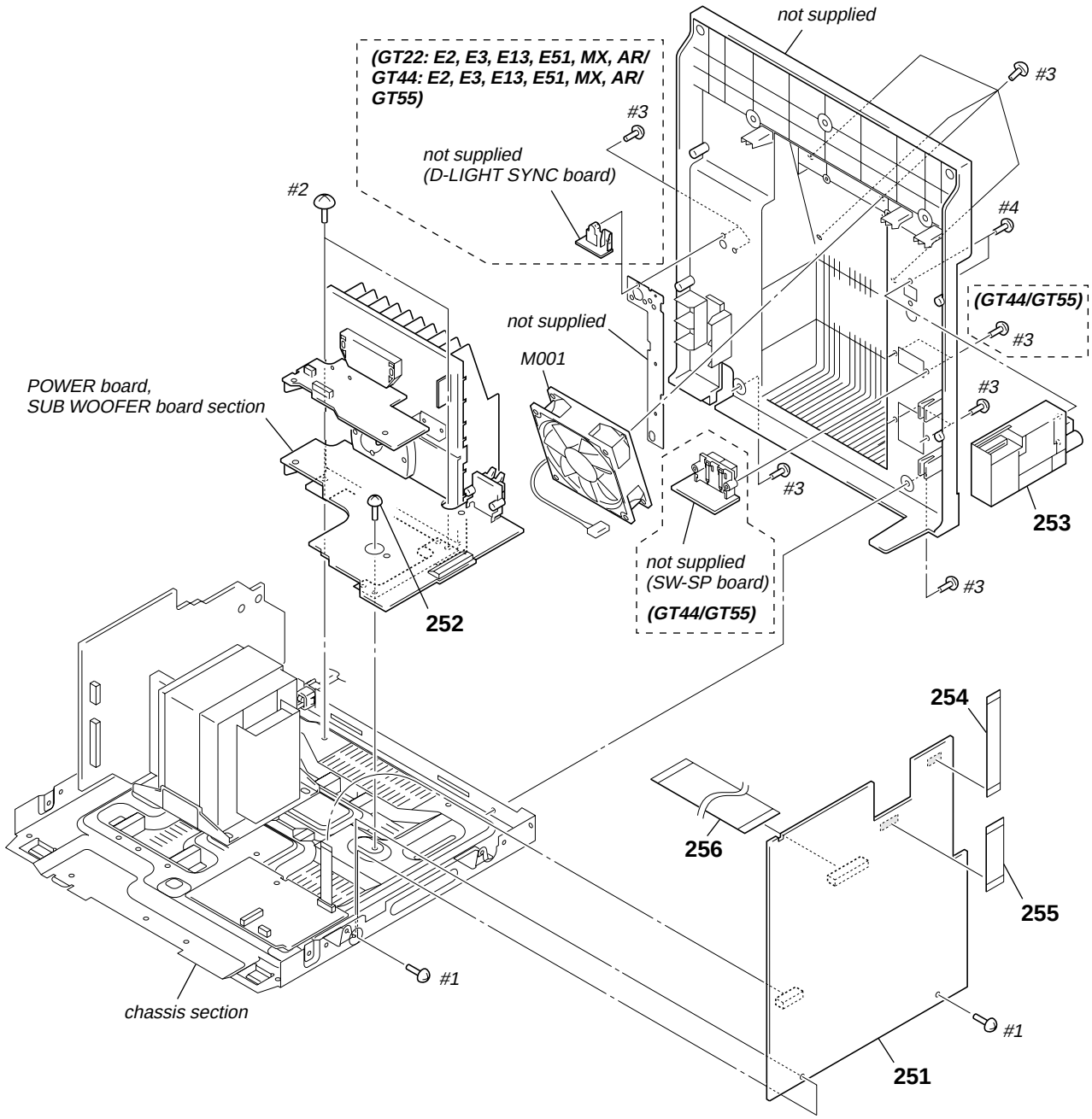

Ref. No.	Part No.	Description	Remark
251	A-1234-729-A	MAIN BOARD, COMPLETE (GT55: E2)	
251	A-1234-731-A	MAIN BOARD, COMPLETE (GT44: E2)	
251	A-1234-733-A	MAIN BOARD, COMPLETE (GT22: E2)	
251	A-1271-520-A	MAIN BOARD, COMPLETE (GT55: E51, AR)	
251	A-1271-523-A	MAIN BOARD, COMPLETE (GT55: MX)	
251	A-1271-844-A	MAIN BOARD, COMPLETE (GT44: E51, AR)	
251	A-1271-845-A	MAIN BOARD, COMPLETE (GT44: E3, E13)	
251	A-1271-846-A	MAIN BOARD, COMPLETE (GT44: AUS)	
251	A-1271-847-A	MAIN BOARD, COMPLETE (GT44: MX)	
251	A-1271-850-A	MAIN BOARD, COMPLETE (GT22: E51, AR)	
251	A-1271-851-A	MAIN BOARD, COMPLETE (GT22: E3, E13)	
251	A-1271-852-A	MAIN BOARD, COMPLETE (GT22: AUS)	
251	A-1271-853-A	MAIN BOARD, COMPLETE (GT22: MX)	
252	3-077-331-01	+BV3 (3-CR)	
253	1-693-727-21	TUNER (FM/AM)	
254	1-834-335-21	CABLE, FLEXIBLE FLAT (9 CORE)	
255	1-831-785-21	CABLE, FLEXIBLE FLAT (13 CORE)	
256	1-832-617-21	CABLE, FLEXIBLE FLAT (21 CORE)	
M001	1-787-631-11	FAN, DC	
#1	7-685-646-79	SCREW +BVTP 3X8 TYPE2 IT-3	
#2	7-685-881-09	SCREW +BVTT 4X8 (S)	
#3	7-685-647-79	SCREW +BVTP 3X10 TYPE2 IT-3	
#4	7-685-862-09	SCREW +BVTT 2.6X6 (S)	

8-7. POWER BOARD, SUB WOOFER BOARD SECTION

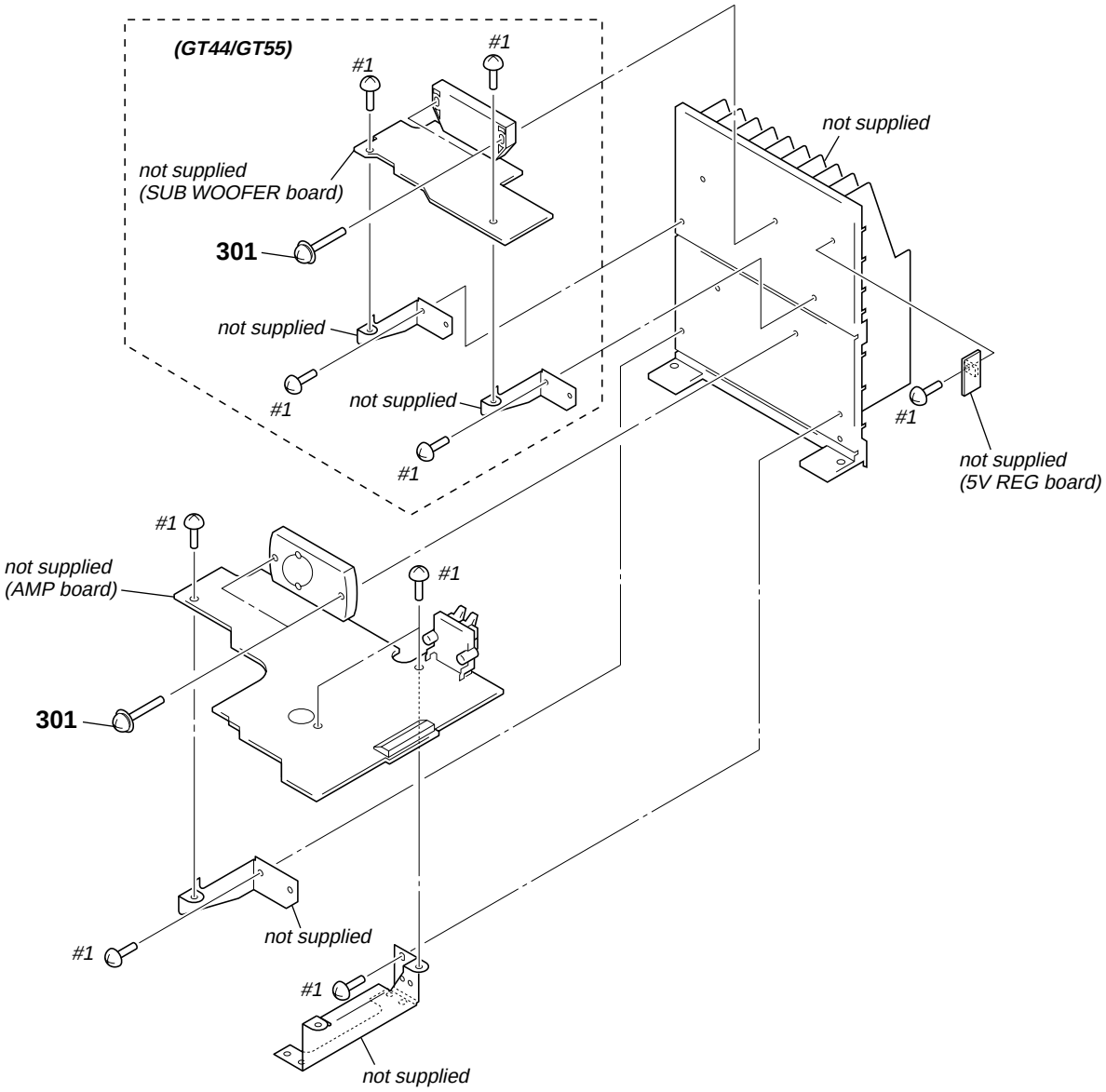

Ref. No.	Part No.	Description	Remark	Ref. No.	Part No.	Description	Remark
301	3-905-609-31	SCREW (TRANSISTOR)		#1	7-685-646-79	SCREW +BVTP 3X8 TYPE2 IT-3	

8-8. CHASSIS SECTION

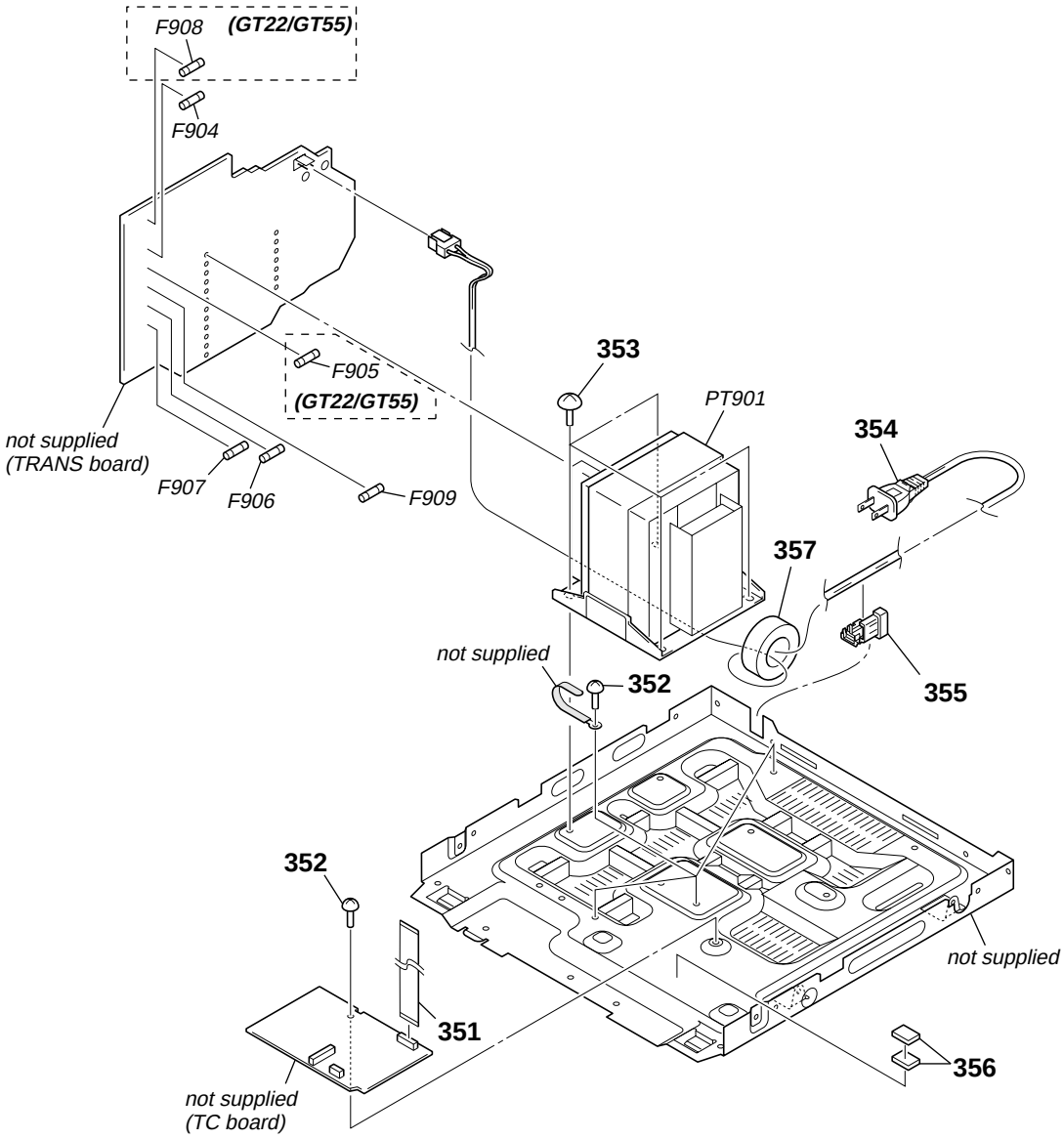

Ref. No.	Part No.	Description	Remark
351	1-832-824-21	CABLE, FLEXIBLE FLAT (11 CORE)	
352	3-077-331-01	+BV3 (3-CR)	
353	4-900-386-01	SCREW	
⚠354	1-775-790-71	CORD, POWER (GT22: AUS/GT44: AUS)	
⚠354	1-829-387-11	CORD, POWER (GT22: AR/GT44: AR/GT55: AR)	
⚠354	1-829-627-11	POWER-SUPPLY CORD (GT22: MX/GT44: MX/ GT55: MX)	
⚠354	1-830-188-21	CORD, POWER (GT22: E2, E3, E13, E51/GT44: E2, E3, E13, E51/GT55: E2, E51)	
355	3-703-571-11	CORD BUSH (4516) (GT22: MX/GT44: MX/ GT55: MX)	
355	3-703-244-00	BUSHING (2104), CORD (GT22: E2, E3, E13, E51, AR, AUS/GT44: E2, E3, E13, E51, AR, AUS/ GT55: E2, E51, AR)	
356	4-225-252-01	CUSHION (FOOT)	
357	1-500-868-11	CORE, FERRITE	

Ref. No.	Part No.	Description	Remark
⚠F904	1-532-506-33	FUSE (T6.3AL/250V) (GT22/GT55)	
⚠F904	1-533-949-33	FUSE, CYLINDRICAL (TIME LAG) (T8AL/250V)	(GT44)
⚠F905	1-532-506-33	FUSE (T6.3AL/250V) (GT22/GT55)	
⚠F906	1-532-465-33	FUSE (T3.15AL/250V)	
⚠F907	1-532-465-33	FUSE (T3.15AL/250V)	
⚠F908	1-533-949-33	FUSE, CYLINDRICAL (TIME LAG) (T8AL/250V)	(GT22/GT55)
⚠F909	1-533-949-33	FUSE, CYLINDRICAL (TIME LAG) (T8AL/250V)	
⚠PT901	1-445-144-11	TRANSFORMER, POWER (GT44: MX)	
⚠PT901	1-445-147-11	TRANSFORMER, POWER (GT22: MX/GT55: MX)	
⚠PT901	1-445-216-11	TRANSFORMER, POWER (GT44: E2, E3, E13, E51, AR, AUS)	
⚠PT901	1-445-219-11	TRANSFORMER, POWER (GT22: E2, E3, E13, E51, AR, AUS/GT55: E2, E51, AR)	

8-9. CD MECHANISM DECK SECTION-1 (CDM74KF-K6BD91UR-WOD)

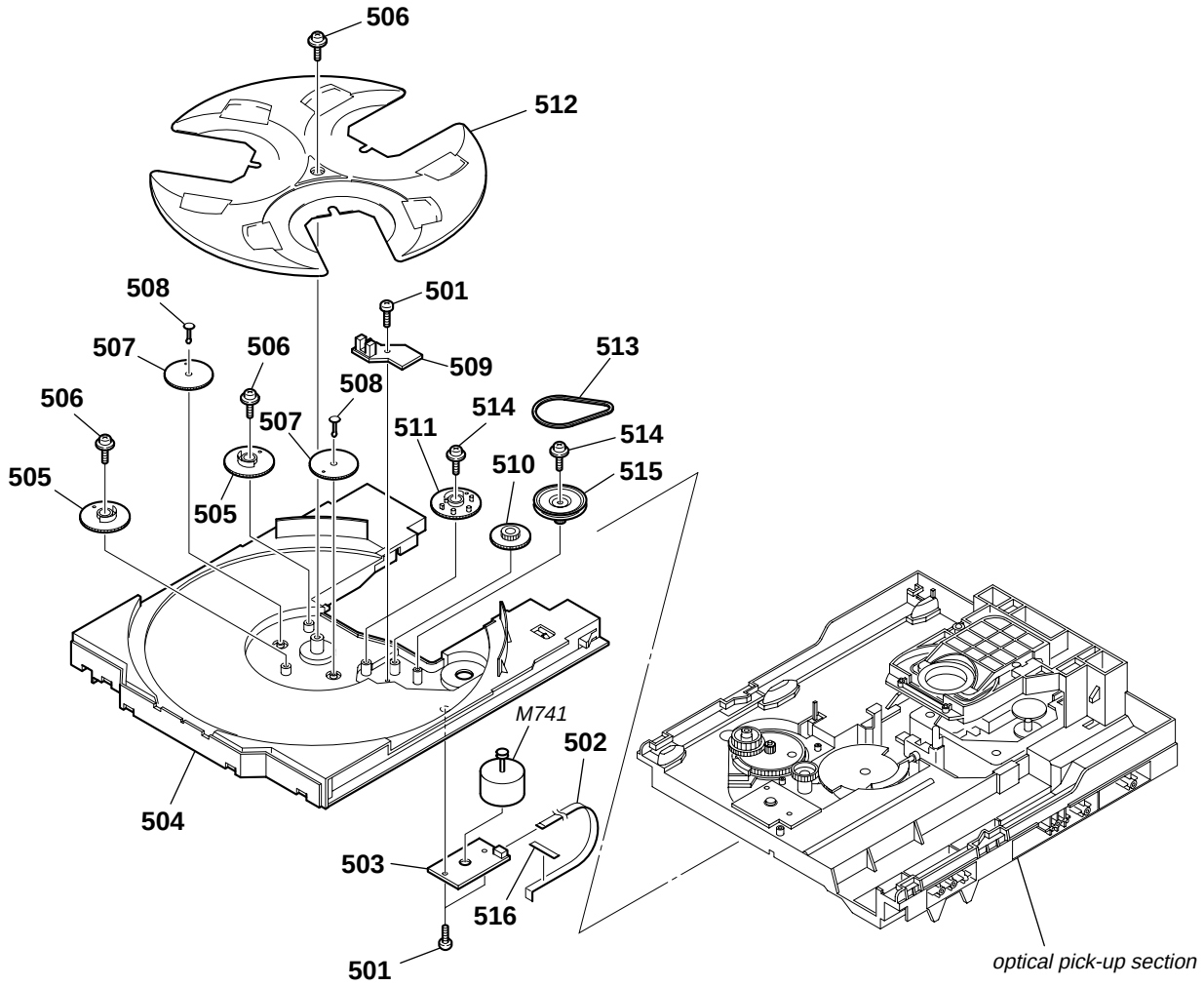

Ref. No.	Part No.	Description	Remark
501	4-218-253-62	SCREW (M2.6), +BTTP	
502	1-828-938-51	WIRE (FLAT TYPE) (5 CORE)	
503	1-687-134-12	MOTOR (TB) BOARD	
504	4-243-815-11	TABLE (LOADING)	
505	4-245-571-02	GEAR (STOPPER)	
506	4-218-252-61	SCREW (+PTPWH M2.6), FLOATING	
507	4-245-570-01	GEAR (JOINT)	
508	4-245-572-01	BUSHING (GEAR)	
509	1-687-132-12	SENSOR BOARD	
510	4-243-820-01	GEAR (TABLE)	
511	4-243-819-01	GEAR (GENEVA)	
512	4-243-816-11	TRAY	
513	4-243-823-11	BELT (TABLE)	
514	4-985-672-01	SCREW (+PTPWH M2.6), FLOATING	
515	4-243-821-01	PULLEY (TABLE)	
516	3-231-598-01	SHEET (BA)	
M741	A-1108-965-A	MOTOR ASSY, TABLE	

8-10. CD MECHANISM DECK SECTION-2 (CDM74KF-K6BD91UR-WOD)

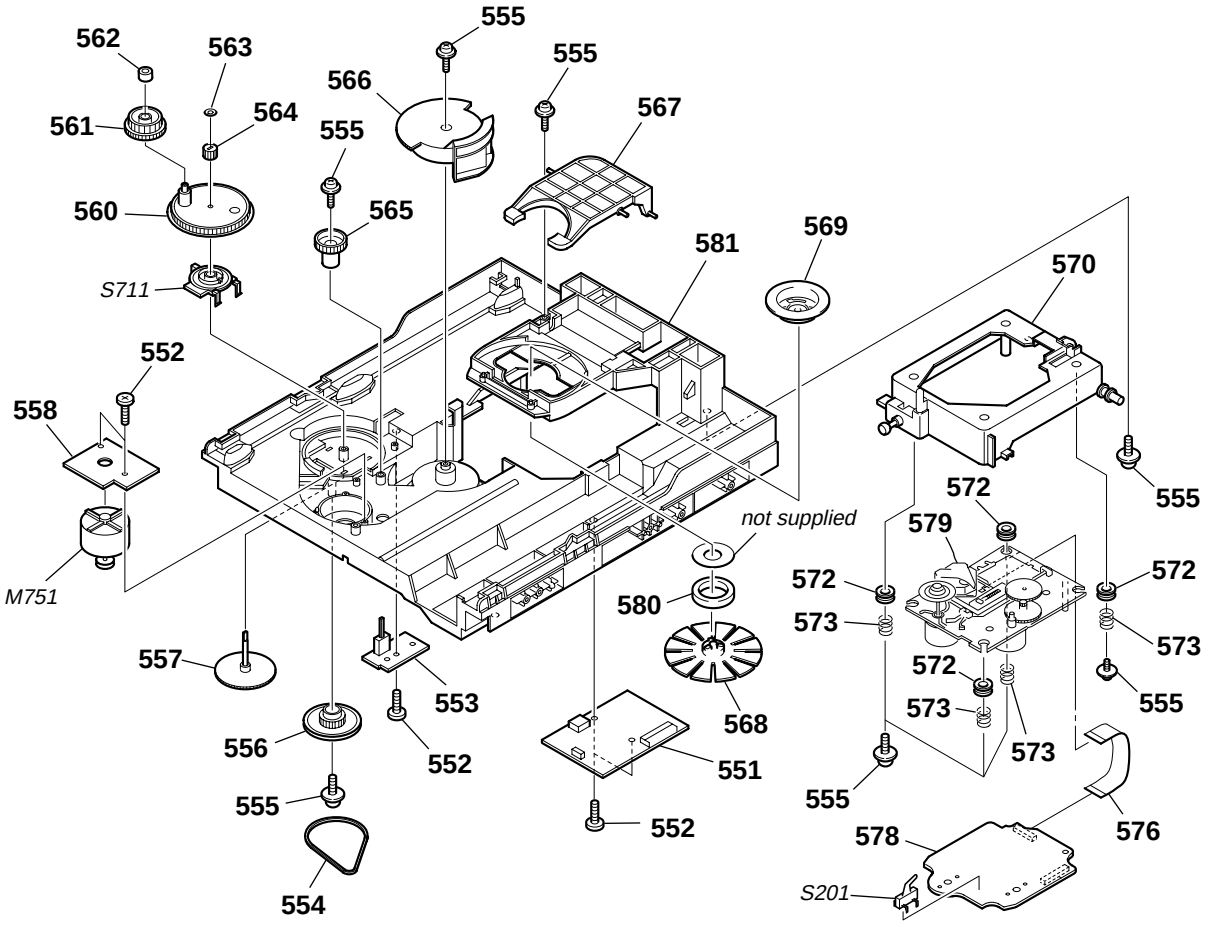

Ref. No.	Part No.	Description	Remark
551	A-1103-756-B	DRIVER BOARD, COMPLETE	
552	4-218-253-52	SCREW (M2.6), +BTTP	
553	1-687-669-12	SW BOARD	
554	4-244-034-11	BELT (LOADING)	
555	4-985-672-01	SCREW (+PTPWH M2.6), FLOATING	
556	4-225-844-01	GEAR (LOADING A)	
557	4-224-613-11	GEAR (SHAFT)	
558	1-687-133-12	MOTOR (LD) BOARD	
560	4-244-108-01	GEAR, SWING	
561	4-224-609-01	GEAR (LOADING C)	
562	4-224-608-01	COLLAR, SWING	
563	3-016-533-11	WASHER (FR), STOPPER	
564	4-224-611-01	GEAR (LOADING B)	
565	4-224-606-01	GEAR (RV)	
566	4-243-818-01	GEAR (U/D)	

Ref. No.	Part No.	Description	Remark
567	4-243-822-02	LEVER (LIFTER)	
568	X-2102-809-3	PULLEY (KH) ASSY	
569	4-231-189-01	PULLEY (B), CHUCKING	
570	X-2055-190-1	HOLDER (213) ASSY	
572	4-227-549-11	INSULATOR	
573	4-227-045-31	SPRING (INSULATOR), COIL	
576	1-834-268-21	WIRE (FLAT TYPE) (16 CORE)	
578	A-1236-250-A	CD BOARD, COMPLETE	
⚠579	A-4735-357-A	OPTICAL PICK-UP BLOCK (KSM-213D)	
580	1-471-035-21	MAGNET	
581	4-243-817-22	CHASSIS	
M751	A-1108-966-A	MOTOR ASSY, LOADING	
S201	1-771-853-11	SWITCH, DETECTION (LIMIT)	
S711	1-477-680-12	ENCODER, ROTARY (DISC, TABLE, ADDRESS, DETECT)	

SECTION 9
ELECTRICAL PARTS LIST

5V REG | AMP

NOTE:

- Due to standardization, replacements in the parts list may be different from the parts specified in the diagrams or the components used on the set.
- -XX and -X mean standardized parts, so they may have some difference from the original one.
- Items marked "*" are not stocked since they are seldom required for routine service. Some delay should be anticipated when ordering these items.
- CAPACITORS
  uF: µF
- COILS
  uH: µH
- RESISTORS
  All resistors are in ohms.
  METAL: Metal-film resistor.
  METAL OXIDE: Metal oxide-film resistor.
  F: nonflammable
- SEMICONDUCTORS
  In each case, u: µ, for example:
  uA... : µA... uPA... : µPA...
  uPB... : µPB... uPC... : µPC...
  uPD... : µPD...
- Abbreviation
  AR : Argentina model
  AUS : Australian model
  E2 : 120V AC area in E model
  E3 : 240V AC area in E model
  E13 : 220V – 230V AC area in E model
  E51 : Chilean and Peruvian models
  MX : Mexican model

The components identified by mark ⚠ or dotted line with mark ⚠ are critical for safety. Replace only with part number specified.

When indicating parts by reference number, please include the board.

Ref. No.	Part No.	Description			Remark
		5V REG BOARD			
		**********			
		< CAPACITOR >			
C029	1-100-566-91	CERAMIC CHIP	0.1uF	10%	25V
C030	1-100-566-91	CERAMIC CHIP	0.1uF	10%	25V
C031	1-126-964-11	ELECT	10uF	20%	50V
C032	1-126-964-11	ELECT	10uF	20%	50V
		< DIODE >			
D005	8-719-085-36	DIODE 11EQS04-TB5			
		< IC >			
IC007	6-705-464-01	IC BA50BC0T			
		< RESISTOR >			
R008	1-216-829-11	METAL CHIP	4.7K	5%	1/10W
R009	1-216-829-11	METAL CHIP	4.7K	5%	1/10W
**********					
		AMP BOARD			
		**********			
	7-685-872-01	SCREW +BVTT 3X8 (S)			
		< CAPACITOR >			
C403	1-137-749-11	MYLAR	0.1uF		100V
C404	1-137-749-11	MYLAR	0.1uF		100V
C405	1-135-928-21	ELECT	2200uF	20%	63V (GT44: E3, E13, AUS)
C405	1-137-840-11	ELECT (BLOCK)	2200uF	20%	63V (GT44: E2, E51, MX, AR)
C405	1-137-841-11	ELECT (BLOCK)	2200uF	20%	71V (GT22: E2, E51, MX, AR/GT55)
C405	1-137-847-21	ELECT	2200uF	20%	71V (GT22: E3, E13, AUS)
C406	1-135-928-21	ELECT	2200uF	20%	63V (GT44: E3, E13, AUS)
C406	1-137-840-11	ELECT (BLOCK)	2200uF	20%	63V (GT44: E2, E51, MX, AR)
C406	1-137-841-11	ELECT (BLOCK)	2200uF	20%	71V (GT22: E2, E51, MX, AR/GT55)
C406	1-137-847-21	ELECT	2200uF	20%	71V (GT22: E3, E13, AUS)
C409	1-135-515-21	ELECT	3300uF	20%	50V (GT55)
C409	1-135-832-21	ELECT	2200uF	20%	50V (GT22)
C410	1-135-515-21	ELECT	3300uF	20%	50V (GT55)
C410	1-135-832-21	ELECT	2200uF	20%	50V (GT22)
C411	1-162-964-11	CERAMIC CHIP	0.001uF	10%	50V
C413	1-130-495-00	MYLAR	0.1uF	5%	50V (GT22/GT55)
C414	1-130-495-00	MYLAR	0.1uF	5%	50V (GT22/GT55)
C441	1-126-964-11	ELECT	10uF	20%	50V
C442	1-126-964-11	ELECT	10uF	20%	50V
C443	1-162-964-11	CERAMIC CHIP	0.001uF	10%	50V
C444	1-162-964-11	CERAMIC CHIP	0.001uF	10%	50V
C445	1-162-927-11	CERAMIC CHIP	100PF	5%	50V
C446	1-162-927-11	CERAMIC CHIP	100PF	5%	50V
C447	1-126-967-11	ELECT	47uF	20%	50V
C448	1-126-967-11	ELECT	47uF	20%	50V
C451	1-130-495-00	MYLAR	0.1uF	5%	50V
C452	1-130-495-00	MYLAR	0.1uF	5%	50V
C453	1-130-495-00	MYLAR	0.1uF	5%	50V
C454	1-130-495-00	MYLAR	0.1uF	5%	50V
C461	1-128-562-11	ELECT	47uF	20%	100V (GT22/GT55)
C462	1-128-562-11	ELECT	47uF	20%	100V (GT22/GT55)
C463	1-126-965-11	ELECT	22uF	20%	50V (GT22/GT55)
C481	1-104-658-91	ELECT	100uF	20%	10V
C486	1-126-961-11	ELECT	2.2uF	20%	50V
C488	1-126-965-11	ELECT	22uF	20%	50V (GT44)
C489	1-128-552-51	ELECT	47uF	20%	63V (GT44)
C490	1-128-576-11	ELECT	100uF	20%	63V (GT44)
		< CONNECTOR >			
* CN441	1-573-087-11	PIN, CONNECTOR 13P			
		< DIODE >			
D401	6-500-360-01	DIODE D10XB20			

AMP

Ref. No.	Part No.	Description				Remark
D402	6-500-360-01	DIODE	D10XB20 (GT22/GT55)			
D441	6-500-334-01	DIODE	MC2836-T112-1			
D443	8-719-404-50	DIODE	MA111-TX			
D445	6-501-179-01	DIODE	UDZW-TE17-16B (GT22/GT55)			
D446	6-501-179-01	DIODE	UDZW-TE17-16B (GT22/GT55)			
D447	6-500-968-21	DIODE	30PRA20FC (GT22/GT55)			
D448	6-500-968-21	DIODE	30PRA20FC (GT22/GT55)			
D481	8-719-404-50	DIODE	MA111-TX			
D483	8-719-404-50	DIODE	MA111-TX			
		< EARTH TERMINAL >				
EP401	1-537-771-21	TERMINAL BOARD, GROUND				
		< IC >				
IC441	6-600-221-11	IC	STK403-130-M-E (GT44)			
IC441	6-600-582-01	IC	STK415-130-E (GT22/GT55)			
		< TERMINAL BOARD >				
JK441	1-694-785-11	TERMINAL BOARD (SPEAKER)				
		< JUMPER RESISTOR >				
JR401	1-216-864-11	SHORT CHIP	0 (GT22/GT55)			
JR402	1-216-864-11	SHORT CHIP	0 (GT22/GT55)			
JR403	1-216-864-11	SHORT CHIP	0 (GT22/GT55)			
		< COIL >				
L441	1-422-009-13	COIL, AIR-CORE				
L442	1-422-009-13	COIL, AIR-CORE				
		< TRANSISTOR >				
Q441	6-551-268-01	TRANSISTOR	2SC5625			
Q442	6-551-268-01	TRANSISTOR	2SC5625			
Q480	8-729-620-07	TRANSISTOR	2SC3052EF-T1-LEF			(GT44/GT55)
Q481	8-729-620-07	TRANSISTOR	2SC3052EF-T1-LEF			
Q482	8-729-620-07	TRANSISTOR	2SC3052EF-T1-LEF			
Q483	8-729-620-07	TRANSISTOR	2SC3052EF-T1-LEF			
Q484	8-729-620-07	TRANSISTOR	2SC3052EF-T1-LEF			
Q485	6-551-696-01	TRANSISTOR	ISA1235AC1TP-1EF			
Q486	8-729-620-07	TRANSISTOR	2SC3052EF-T1-LEF			
Q487	8-729-620-07	TRANSISTOR	2SC3052EF-T1-LEF			
Q488	8-729-620-07	TRANSISTOR	2SC3052EF-T1-LEF			
Q489	8-729-620-07	TRANSISTOR	2SC3052EF-T1-LEF			
		< RESISTOR >				
R401	1-216-845-11	METAL CHIP	100K	5%	1/10W	
R402	1-216-845-11	METAL CHIP	100K	5%	1/10W	
R403	1-216-845-11	METAL CHIP	100K	5%	1/10W	
R404	1-216-845-11	METAL CHIP	100K	5%	1/10W	
R405	1-216-845-11	METAL CHIP	100K	5%	1/10W	(GT22/GT55)
R406	1-216-845-11	METAL CHIP	100K	5%	1/10W	(GT22/GT55)
R407	1-216-809-11	METAL CHIP	100	5%	1/10W	
R409	1-216-845-11	METAL CHIP	100K	5%	1/10W	(GT22/GT55)
R410	1-216-845-11	METAL CHIP	100K	5%	1/10W	(GT22/GT55)
R411	1-216-797-11	METAL CHIP	10	5%	1/10W	(GT22/GT55)
R412	1-216-797-11	METAL CHIP	10	5%	1/10W	
R413	1-216-797-11	METAL CHIP	10	5%	1/10W	
R414	1-216-797-11	METAL CHIP	10	5%	1/10W	
R415	1-216-797-11	METAL CHIP	10	5%	1/10W	
R416	1-216-797-11	METAL CHIP	10	5%	1/10W	
R417	1-216-809-11	METAL CHIP	100	5%	1/10W	
R418	1-216-809-11	METAL CHIP	100	5%	1/10W	
R419	1-216-809-11	METAL CHIP	100	5%	1/10W	
R420	1-216-797-11	METAL CHIP	10	5%	1/10W	
R421	1-216-797-11	METAL CHIP	10	5%	1/10W	
R422	1-216-797-11	METAL CHIP	10	5%	1/10W	
R423	1-216-797-11	METAL CHIP	10	5%	1/10W	
R424	1-216-797-11	METAL CHIP	10	5%	1/10W	
R425	1-216-797-11	METAL CHIP	10	5%	1/10W	
R426	1-216-837-11	METAL CHIP	22K	5%	1/10W	(GT44)
R427	1-216-841-11	METAL CHIP	47K	5%	1/10W	(GT44)
R440	1-216-835-11	METAL CHIP	15K	5%	1/10W	
R441	1-216-825-11	METAL CHIP	2.2K	5%	1/10W	
R442	1-216-825-11	METAL CHIP	2.2K	5%	1/10W	
R443	1-216-841-11	METAL CHIP	47K	5%	1/10W	
R444	1-216-841-11	METAL CHIP	47K	5%	1/10W	
R445	1-216-821-11	METAL CHIP	1K	5%	1/10W	
R446	1-216-821-11	METAL CHIP	1K	5%	1/10W	
R447	1-216-841-11	METAL CHIP	47K	5%	1/10W	
R448	1-216-841-11	METAL CHIP	47K	5%	1/10W	
⚠R449	1-212-974-00	FUSIBLE	47	5%	1/2W F	(GT44)
⚠R449	1-220-893-11	METAL	0.22	10%	5W F	(GT22/GT55)
⚠R450	1-220-893-11	METAL	0.22	10%	5W F	(GT22/GT55)
⚠R451	1-220-893-11	METAL	0.22	10%	5W F	(GT44)
⚠R452	1-220-893-11	METAL	0.22	10%	5W F	(GT44)
R453	1-216-797-11	METAL CHIP	10	5%	1/10W	
R454	1-216-797-11	METAL CHIP	10	5%	1/10W	
R455	1-216-821-11	METAL CHIP	1K	5%	1/10W	
R456	1-216-821-11	METAL CHIP	1K	5%	1/10W	
R457	1-216-837-11	METAL CHIP	22K	5%	1/10W	
R458	1-216-837-11	METAL CHIP	22K	5%	1/10W	
R459	1-216-841-11	METAL CHIP	47K	5%	1/10W	(GT44)
R459	1-216-845-11	METAL CHIP	100K	5%	1/10W	(GT22/GT55)
R460	1-216-841-11	METAL CHIP	47K	5%	1/10W	(GT44)
R460	1-216-845-11	METAL CHIP	100K	5%	1/10W	(GT22/GT55)
R461	1-216-797-11	METAL CHIP	10	5%	1/10W	
R462	1-216-797-11	METAL CHIP	10	5%	1/10W	
R465	1-216-841-11	METAL CHIP	47K	5%	1/10W	
R466	1-216-845-11	METAL CHIP	100K	5%	1/10W	
⚠R467	1-215-871-11	METAL OXIDE	2.2K	5%	1W F	(GT22/GT55)

Ref. No.	Part No.	Description			Remark
R467	1-216-797-11	METAL CHIP	10	5%	1/10W (GT44)
⚠R468	1-215-871-11	METAL OXIDE	2.2K	5%	1W F (GT22/GT55)
R469	1-216-839-11	METAL CHIP	33K	5%	1/10W (GT22/GT55)
R470	1-216-821-11	METAL CHIP	1K	5%	1/10W (GT22/GT55)
R479	1-216-827-11	METAL CHIP	3.3K	5%	1/10W (GT22/GT55)
R480	1-216-839-11	METAL CHIP	33K	5%	1/10W
R481	1-216-829-11	METAL CHIP	4.7K	5%	1/10W
R482	1-216-833-11	METAL CHIP	10K	5%	1/10W
R483	1-216-815-11	METAL CHIP	330	5%	1/10W
R484	1-216-841-11	METAL CHIP	47K	5%	1/10W
R485	1-216-841-11	METAL CHIP	47K	5%	1/10W
R486	1-216-845-11	METAL CHIP	100K	5%	1/10W
R487	1-216-841-11	METAL CHIP	47K	5%	1/10W
R488	1-216-837-11	METAL CHIP	22K	5%	1/10W
R489	1-216-825-11	METAL CHIP	2.2K	5%	1/10W (GT44/GT55)
R490	1-216-825-11	METAL CHIP	2.2K	5%	1/10W
R491	1-216-833-11	METAL CHIP	10K	5%	1/10W (GT44)
R491	1-216-839-11	METAL CHIP	33K	5%	1/10W (GT22/GT55)
R492	1-216-821-11	METAL CHIP	1K	5%	1/10W (GT44)
R492	1-216-839-11	METAL CHIP	33K	5%	1/10W (GT22/GT55)
R493	1-216-841-11	METAL CHIP	47K	5%	1/10W (GT44)
⚠R495	1-202-972-61	FUSIBLE	1	5%	1/4W F
⚠R496	1-212-881-11	FUSIBLE	100	5%	1/4W F
R497	1-216-846-11	METAL CHIP	120K	5%	1/10W
R498	1-216-821-11	METAL CHIP	1K	5%	1/10W
R499	1-216-821-11	METAL CHIP	1K	5%	1/10W
⚠R500	1-212-881-11	FUSIBLE	100	5%	1/4W F (GT22/GT55)
		< RELAY >			
RY441	1-755-307-11	RELAY (GT44)			
RY441	1-755-308-11	RELAY (GT22/GT55)			
		< THERMISTOR >			
TH441	1-807-796-11	THERMISTOR			

****

	A-1236-250-A	CD BOARD, COMPLETE			
		**********			
		< CAPACITOR >			
C100	1-164-360-11	CERAMIC CHIP	0.1uF		16V
C101	1-164-360-11	CERAMIC CHIP	0.1uF		16V
C102	1-164-360-11	CERAMIC CHIP	0.1uF		16V
C103	1-164-360-11	CERAMIC CHIP	0.1uF		16V
C104	1-164-360-11	CERAMIC CHIP	0.1uF		16V
C105	1-164-360-11	CERAMIC CHIP	0.1uF		16V
C106	1-128-995-21	ELECT CHIP	100uF	20%	10V
C107	1-164-360-11	CERAMIC CHIP	0.1uF		16V
C108	1-164-360-11	CERAMIC CHIP	0.1uF		16V
C109	1-164-360-11	CERAMIC CHIP	0.1uF		16V
C110	1-164-360-11	CERAMIC CHIP	0.1uF		16V
C112	1-164-360-11	CERAMIC CHIP	0.1uF		16V
C113	1-164-360-11	CERAMIC CHIP	0.1uF		16V
C115	1-124-778-00	ELECT CHIP	22uF	20%	6.3V
C116	1-164-360-11	CERAMIC CHIP	0.1uF		16V
C117	1-164-227-11	CERAMIC CHIP	0.022uF	10%	25V
C118	1-162-970-11	CERAMIC CHIP	0.01uF	10%	25V
C119	1-164-227-11	CERAMIC CHIP	0.022uF	10%	25V
C120	1-162-970-11	CERAMIC CHIP	0.01uF	10%	25V
C122	1-164-315-11	CERAMIC CHIP	470PF	5%	50V
C123	1-164-315-11	CERAMIC CHIP	470PF	5%	50V
C124	1-162-968-11	CERAMIC CHIP	0.0047uF	10%	50V
C125	1-162-968-11	CERAMIC CHIP	0.0047uF	10%	50V
C126	1-107-826-11	CERAMIC CHIP	0.1uF	10%	16V
C127	1-162-966-11	CERAMIC CHIP	0.0022uF	10%	50V
C128	1-162-910-11	CERAMIC CHIP	5PF	0.25PF	50V
C130	1-162-910-11	CERAMIC CHIP	5PF	0.25PF	50V
C132	1-164-360-11	CERAMIC CHIP	0.1uF		16V
C133	1-107-826-11	CERAMIC CHIP	0.1uF	10%	16V
C136	1-162-923-11	CERAMIC CHIP	47PF	5%	50V
C137	1-162-970-11	CERAMIC CHIP	0.01uF	10%	25V
C138	1-164-315-11	CERAMIC CHIP	470PF	5%	50V
C139	1-162-970-11	CERAMIC CHIP	0.01uF	10%	25V
C140	1-162-970-11	CERAMIC CHIP	0.01uF	10%	25V
C141	1-162-966-11	CERAMIC CHIP	0.0022uF	10%	50V
C142	1-107-826-11	CERAMIC CHIP	0.1uF	10%	16V
C143	1-162-970-11	CERAMIC CHIP	0.01uF	10%	25V
C144	1-107-826-11	CERAMIC CHIP	0.1uF	10%	16V
C145	1-162-970-11	CERAMIC CHIP	0.01uF	10%	25V
C146	1-164-315-11	CERAMIC CHIP	470PF	5%	50V
C147	1-107-826-11	CERAMIC CHIP	0.1uF	10%	16V
C148	1-162-923-11	CERAMIC CHIP	47PF	5%	50V
C149	1-162-919-11	CERAMIC CHIP	22PF	5%	50V
C150	1-162-964-11	CERAMIC CHIP	0.001uF	10%	50V
C151	1-164-315-11	CERAMIC CHIP	470PF	5%	50V
C152	1-164-315-11	CERAMIC CHIP	470PF	5%	50V
C153	1-164-360-11	CERAMIC CHIP	0.1uF		16V
C201	1-128-995-21	ELECT CHIP	100uF	20%	10V
C202	1-128-995-21	ELECT CHIP	100uF	20%	10V
C204	1-164-360-11	CERAMIC CHIP	0.1uF		16V
C205	1-164-360-11	CERAMIC CHIP	0.1uF		16V
C206	1-165-908-11	CERAMIC CHIP	1uF	10%	10V
C207	1-165-908-11	CERAMIC CHIP	1uF	10%	10V
C301	1-164-360-11	CERAMIC CHIP	0.1uF		16V
C302	1-137-710-91	CERAMIC CHIP	10uF	20%	6.3V
C303	1-137-710-91	CERAMIC CHIP	10uF	20%	6.3V
C306	1-128-995-21	ELECT CHIP	100uF	20%	10V
C307	1-165-908-11	CERAMIC CHIP	1uF	10%	10V
C309	1-162-964-11	CERAMIC CHIP	0.001uF	10%	50V
C401	1-128-394-11	ELECT CHIP	220uF	20%	10V
C403	1-164-360-11	CERAMIC CHIP	0.1uF		16V
C404	1-164-360-11	CERAMIC CHIP	0.1uF		16V
C405	1-164-360-11	CERAMIC CHIP	0.1uF		16V

CD D-LIGHT SYNC

Ref. No.	Part No.	Description			Remark
		< CONNECTOR >			
CN202	1-784-835-51	CONNECTOR, FFC (LIF (NON-ZIF)) 27P			
CN301	1-770-425-51	CONNECTOR, FFC/FPC 16P			
		< IC >			
IC101	6-710-827-01	IC TC94A70FG-008 (S, D)			
IC201	6-710-808-01	IC TK63115SCL-G@GT			
IC401	6-710-637-01	IC BA5826SFP-E2			
		< TRANSISTOR >			
Q301	6-551-120-01	TRANSISTOR	2SA2119K		
		< RESISTOR/FERRITE BEAD >			
R101	1-216-813-11	METAL CHIP	220	5%	1/10W
R102	1-216-833-11	METAL CHIP	10K	5%	1/10W
R104	1-216-295-00	SHORT CHIP	0		
R105	1-216-857-11	METAL CHIP	1M	5%	1/10W
R106	1-216-821-11	METAL CHIP	1K	5%	1/10W
R108	1-500-445-21	FERRITE, EMI (SMD) (2012)			
R109	1-216-809-11	METAL CHIP	100	5%	1/10W
R110	1-216-833-11	METAL CHIP	10K	5%	1/10W
R111	1-216-809-11	METAL CHIP	100	5%	1/10W
R112	1-216-809-11	METAL CHIP	100	5%	1/10W
R114	1-216-833-11	METAL CHIP	10K	5%	1/10W
R118	1-216-845-11	METAL CHIP	100K	5%	1/10W
R119	1-216-864-11	SHORT CHIP	0		
R121	1-216-809-11	METAL CHIP	100	5%	1/10W
R128	1-216-853-11	METAL CHIP	470K	5%	1/10W
R129	1-216-821-11	METAL CHIP	1K	5%	1/10W
R130	1-216-829-11	METAL CHIP	4.7K	5%	1/10W
R134	1-216-857-11	METAL CHIP	1M	5%	1/10W
R135	1-216-853-11	METAL CHIP	470K	5%	1/10W
R136	1-216-837-11	METAL CHIP	22K	5%	1/10W
R139	1-216-841-11	METAL CHIP	47K	5%	1/10W
R140	1-216-864-11	SHORT CHIP	0		
R142	1-216-837-11	METAL CHIP	22K	5%	1/10W
R143	1-216-841-11	METAL CHIP	47K	5%	1/10W
R144	1-216-837-11	METAL CHIP	22K	5%	1/10W
R145	1-216-864-11	SHORT CHIP	0		
R146	1-216-864-11	SHORT CHIP	0		
R147	1-216-864-11	SHORT CHIP	0		
R148	1-216-864-11	SHORT CHIP	0		
R149	1-216-864-11	SHORT CHIP	0		
R150	1-216-864-11	SHORT CHIP	0		
R151	1-216-864-11	SHORT CHIP	0		
R153	1-216-857-11	METAL CHIP	1M	5%	1/10W
R154	1-216-857-11	METAL CHIP	1M	5%	1/10W
R155	1-216-805-11	METAL CHIP	47	5%	1/10W
R156	1-216-809-11	METAL CHIP	100	5%	1/10W
R157	1-216-809-11	METAL CHIP	100	5%	1/10W
R201	1-216-295-00	SHORT CHIP	0		
R202	1-216-295-00	SHORT CHIP	0		
R203	1-216-809-11	METAL CHIP	100	5%	1/10W
R204	1-216-809-11	METAL CHIP	100	5%	1/10W
R205	1-216-809-11	METAL CHIP	100	5%	1/10W
R206	1-216-809-11	METAL CHIP	100	5%	1/10W
R207	1-216-809-11	METAL CHIP	100	5%	1/10W
R208	1-216-809-11	METAL CHIP	100	5%	1/10W
R209	1-216-809-11	METAL CHIP	100	5%	1/10W
R210	1-216-809-11	METAL CHIP	100	5%	1/10W
R211	1-216-809-11	METAL CHIP	100	5%	1/10W
R212	1-216-809-11	METAL CHIP	100	5%	1/10W
R213	1-216-809-11	METAL CHIP	100	5%	1/10W
R214	1-216-809-11	METAL CHIP	100	5%	1/10W
R216	1-216-809-11	METAL CHIP	100	5%	1/10W
R218	1-216-845-11	METAL CHIP	100K	5%	1/10W
R219	1-216-845-11	METAL CHIP	100K	5%	1/10W
R220	1-216-845-11	METAL CHIP	100K	5%	1/10W
R221	1-216-845-11	METAL CHIP	100K	5%	1/10W
R222	1-216-845-11	METAL CHIP	100K	5%	1/10W
R223	1-216-845-11	METAL CHIP	100K	5%	1/10W
R224	1-216-809-11	METAL CHIP	100	5%	1/10W
R301	1-216-845-11	METAL CHIP	100K	5%	1/10W
R302	1-216-864-11	SHORT CHIP	0		
R303	1-216-789-11	METAL CHIP	2.2	5%	1/10W
R304	1-216-789-11	METAL CHIP	2.2	5%	1/10W
R402	1-216-825-11	METAL CHIP	2.2K	5%	1/10W
R405	1-216-833-11	METAL CHIP	10K	5%	1/10W
R408	1-216-825-11	METAL CHIP	2.2K	5%	1/10W
R414	1-216-829-11	METAL CHIP	4.7K	5%	1/10W
R415	1-216-841-11	METAL CHIP	47K	5%	1/10W
		< VIBRATOR >			
X102	1-795-101-21	VIBRATOR, CERAMIC (16.9344MHz)			

****

D-LIGHT SYNC BOARD
****
(GT22: E2, E3, E13, E51, MX, AR/
GT44: E2, E3, E13, E51, MX, AR/GT55)

Ref. No.	Part No.	Description			Remark
		< CAPACITOR >			
C701	1-104-666-11	ELECT	220uF	20%	25V
C702	1-100-597-91	CERAMIC CHIP	0.1uF	10%	25V
C703	1-126-964-11	ELECT	10uF	20%	50V
C704	1-162-964-11	CERAMIC CHIP	0.001uF	10%	50V
C705	1-104-662-91	ELECT	22uF	20%	25V
C706	1-127-715-11	CERAMIC CHIP	0.22uF	10%	16V
C707	1-125-891-11	CERAMIC CHIP	0.47uF	10%	10V
		< CONNECTOR >			
CN701	1-815-444-11	PIN, CONNECTOR (PWB) 3P			
		< DIODE >			
D703	6-501-166-01	DIODE UDZW-TE17-4.7B			
		< CONNECTOR >			
J701	1-820-048-11	CONNECTOR (LIGHTING) (D-LIGHT SYNC OUT)			
		< TRANSISTOR >			
Q701	8-729-056-46	TRANSISTOR	2SC5053T100Q		
Q702	8-729-620-07	TRANSISTOR	2SC3052EF-T1-LEF		

D-LIGHT SYNC | DRIVER | KEY LEFT | KEY RIGHT

Ref. No.	Part No.	Description			Remark
		< RESISTOR >			
R701	1-216-849-11	METAL CHIP	220K	5%	1/10W
R702	1-216-842-11	METAL CHIP	56K	5%	1/10W
R703	1-216-821-11	METAL CHIP	1K	5%	1/10W
⚠R705	1-243-563-71	METAL OXIDE	82	5%	2W F
R706	1-216-839-11	METAL CHIP	33K	5%	1/10W
R708	1-216-825-11	METAL CHIP	2.2K	5%	1/10W
R709	1-216-832-11	METAL CHIP	8.2K	5%	1/10W
R710	1-216-813-11	METAL CHIP	220	5%	1/10W

****

	A-1103-756-B	DRIVER BOARD, COMPLETE			
		**********			
	7-611-031-61	WIRE, TINNING COPPER			
		< CAPACITOR >			
C715	1-126-933-11	ELECT	100uF	20%	16V
C731	1-126-964-11	ELECT	10uF	20%	50V
C735	1-164-159-21	CERAMIC	0.1uF		50V
C736	1-164-159-21	CERAMIC	0.1uF		50V
C737	1-164-159-21	CERAMIC	0.1uF		50V
C741	1-162-306-11	CERAMIC	0.01uF	20%	16V
C751	1-162-306-11	CERAMIC	0.01uF	20%	16V
C752	1-164-159-21	CERAMIC	0.1uF		50V
		< CONNECTOR >			
CN701	1-784-735-11	CONNECTOR, FFC 13P			
CN702	1-784-766-11	CONNECTOR, FFC 5P			
* CN703	1-564-720-11	PIN, CONNECTOR (SMALL TYPE) 4P			
CN704	1-785-328-11	PIN, CONNECTOR (LIGHT ANGRE) 2P			
		< DIODE >			
D701	8-719-921-42	DIODE MTZJ-5.1A			
D711	8-719-109-69	DIODE RD3.6ESB2			
		< IC >			
IC701	8-759-598-69	IC BA6956AN			
IC712	8-759-598-69	IC BA6956AN			
		< TRANSISTOR >			
Q731	8-729-029-66	TRANSISTOR	DTC114ESA		
		< RESISTOR >			
R701	1-249-413-11	CARBON	470	5%	1/4W
R702	1-247-807-31	CARBON	100	5%	1/4W
R711	1-249-417-11	CARBON	1K	5%	1/4W
R712	1-249-425-11	CARBON	4.7K	5%	1/4W
R713	1-249-433-11	CARBON	22K	5%	1/4W
R721	1-249-425-11	CARBON	4.7K	5%	1/4W
R722	1-249-425-11	CARBON	4.7K	5%	1/4W
R723	1-249-425-11	CARBON	4.7K	5%	1/4W
R731	1-247-807-31	CARBON	100	5%	1/4W
R732	1-249-429-11	CARBON	10K	5%	1/4W
R733	1-249-417-11	CARBON	1K	5%	1/4W
R734	1-249-430-11	CARBON	12K	5%	1/4W
R736	1-249-412-11	CARBON	390	5%	1/4W

Ref. No.	Part No.	Description			Remark
R751	1-249-425-11	CARBON	4.7K	5%	1/4W

****

		KEY LEFT BOARD			
		**********			
		< CAPACITOR >			
C601	1-115-467-11	CERAMIC CHIP	0.22uF	10%	10V
		< LED >			
D611	6-501-483-01	LED SLR-325VCT31P (I/⏻, STANDBY)			
D612	8-719-060-27	LED SLR-325MCT31 (SUBWOOFER)			
					(GT44/GT55)
		< IC >			
IC601	6-711-556-01	IC NJL24H400B			
		< RESISTOR >			
R602	1-216-817-11	METAL CHIP	470	5%	1/10W
R603	1-216-819-11	METAL CHIP	680	5%	1/10W
R604	1-216-821-11	METAL CHIP	1K	5%	1/10W
R605	1-216-823-11	METAL CHIP	1.5K	5%	1/10W
R606	1-216-825-11	METAL CHIP	2.2K	5%	1/10W
R607	1-216-829-11	METAL CHIP	4.7K	5%	1/10W
					(GT44/GT55)
R655	1-216-817-11	METAL CHIP	470	5%	1/10W
R656	1-216-809-11	METAL CHIP	100	5%	1/10W
R657	1-216-821-11	METAL CHIP	1K	5%	1/10W
R688	1-216-821-11	METAL CHIP	1K	5%	1/10W
					(GT44/GT55)
R698	1-216-821-11	METAL CHIP	1K	5%	1/10W
					(GT44/GT55)
		< SWITCH >			
S602	1-762-875-21	SWITCH, KEYBOARD (I/⏻, STANDBY)			
S603	1-762-875-21	SWITCH, KEYBOARD (CD)			
S604	1-762-875-21	SWITCH, KEYBOARD (TUNER/BAND)			
S605	1-762-875-21	SWITCH, KEYBOARD (TAPE A/B)			
S606	1-762-875-21	SWITCH, KEYBOARD (AUDIO)			
S607	1-762-875-21	SWITCH, KEYBOARD (USB)			
S608	1-762-875-21	SWITCH, KEYBOARD (SUBWOOFER)			
					(GT44/GT55)

****

		KEY RIGHT BOARD			
		**********			
		< CONNECTOR >			
CN615	1-824-027-21	HOLDER, CABLE 3P			
		< RESISTOR >			
R627	1-216-829-11	METAL CHIP	4.7K	5%	1/10W
R631	1-216-815-11	METAL CHIP	330	5%	1/10W
R632	1-216-817-11	METAL CHIP	470	5%	1/10W
R633	1-216-819-11	METAL CHIP	680	5%	1/10W
R634	1-216-821-11	METAL CHIP	1K	5%	1/10W
R635	1-216-823-11	METAL CHIP	1.5K	5%	1/10W
R636	1-216-825-11	METAL CHIP	2.2K	5%	1/10W

KEY RIGHT | KEY TOP | MAIN

Ref. No.	Part No.	Description			Remark
R637	1-216-829-11	METAL CHIP	4.7K	5%	1/10W
		< SWITCH >			
S628	1-762-875-21	SWITCH, KEYBOARD (⏏ OPEN/CLOSE)			
S631	1-762-875-21	SWITCH, KEYBOARD (DISC 1)			
S632	1-762-875-21	SWITCH, KEYBOARD (DISC 2)			
S633	1-762-875-21	SWITCH, KEYBOARD (DISC 3)			
S634	1-762-875-21	SWITCH, KEYBOARD (EX-CHANGE/DISC SKIP)			
S635	1-762-875-21	SWITCH, KEYBOARD (■)			
S636	1-762-875-21	SWITCH, KEYBOARD (CD-USB SYNC/REC)			
S637	1-762-875-21	SWITCH, KEYBOARD (CD-TAPE SYNC)			
S638	1-762-875-21	SWITCH, KEYBOARD (TAPE REC PAUSE/START)			

****

KEY TOP BOARD (GT55)
****

Ref. No.	Part No.	Description			Remark
		< CONNECTOR >			
CN616	1-820-830-11	HOLDER, CABLE 6P			
		< LED >			
D607	6-501-483-01	LED SLR-325VCT31P (GUITAR)			
D608	6-501-483-01	LED SLR-325VCT31P (VOCAL)			
D609	6-501-483-01	LED SLR-325VCT31P (BASS)			
		< RESISTOR >			
R641	1-216-815-11	METAL CHIP	330	5%	1/10W
R642	1-216-817-11	METAL CHIP	470	5%	1/10W
R643	1-216-819-11	METAL CHIP	680	5%	1/10W
R644	1-216-821-11	METAL CHIP	1K	5%	1/10W
R645	1-216-823-11	METAL CHIP	1.5K	5%	1/10W
R646	1-216-825-11	METAL CHIP	2.2K	5%	1/10W
R647	1-216-829-11	METAL CHIP	4.7K	5%	1/10W
R648	1-216-833-11	METAL CHIP	10K	5%	1/10W
R667	1-216-821-11	METAL CHIP	1K	5%	1/10W
R668	1-216-821-11	METAL CHIP	1K	5%	1/10W
R669	1-216-821-11	METAL CHIP	1K	5%	1/10W
R677	1-216-821-11	METAL CHIP	1K	5%	1/10W
R678	1-216-821-11	METAL CHIP	1K	5%	1/10W
R679	1-216-821-11	METAL CHIP	1K	5%	1/10W
		< SWITCH >			
S641	1-762-875-21	SWITCH, KEYBOARD (–)			
S642	1-762-875-21	SWITCH, KEYBOARD (ENTER)			
S643	1-762-875-21	SWITCH, KEYBOARD (+)			
S644	1-762-875-21	SWITCH, KEYBOARD (FOCUS (GUITAR))			
S645	1-762-875-21	SWITCH, KEYBOARD (GUITAR)			
S646	1-762-875-21	SWITCH, KEYBOARD (VOCAL)			
S647	1-762-875-21	SWITCH, KEYBOARD (FOCUS (VOCAL))			
S648	1-762-875-21	SWITCH, KEYBOARD (FOCUS (BASS))			
S649	1-762-875-21	SWITCH, KEYBOARD (BASS)			

****

Ref. No.	Part No.	Description			Remark
	A-1234-729-A	MAIN BOARD, COMPLETE (GT55: E2)			
	A-1234-731-A	MAIN BOARD, COMPLETE (GT44: E2)			
	A-1234-733-A	MAIN BOARD, COMPLETE (GT22: E2)			
	A-1271-520-A	MAIN BOARD, COMPLETE (GT55: E51, AR)			
	A-1271-523-A	MAIN BOARD, COMPLETE (GT55: MX)			
	A-1271-844-A	MAIN BOARD, COMPLETE (GT44: E51, AR)			
	A-1271-845-A	MAIN BOARD, COMPLETE (GT44: E3, E13)			
	A-1271-846-A	MAIN BOARD, COMPLETE (GT44: AUS)			
	A-1271-847-A	MAIN BOARD, COMPLETE (GT44: MX)			
	A-1271-850-A	MAIN BOARD, COMPLETE (GT22: E51, AR)			
	A-1271-851-A	MAIN BOARD, COMPLETE (GT22: E3, E13)			
	A-1271-852-A	MAIN BOARD, COMPLETE (GT22: AUS)			
	A-1271-853-A	MAIN BOARD, COMPLETE (GT22: MX)			
		**********			
	7-685-872-01	SCREW +BVTT 3X8 (S)			
		< CAPACITOR >			
C001	1-136-165-00	FILM	0.1uF	5%	50V
C002	1-136-165-00	FILM	0.1uF	5%	50V
C007	1-126-965-11	ELECT	22uF	20%	50V
C008	1-126-946-11	ELECT	6800uF	20%	25V
C010	1-164-156-11	CERAMIC CHIP	0.1uF		25V
C013	1-126-943-11	ELECT	2200uF	20%	25V
C015	1-104-665-11	ELECT	100uF	20%	25V
C021	1-136-165-00	FILM	0.1uF	5%	50V
C022	1-136-165-00	FILM	0.1uF	5%	50V
C023	1-126-943-11	ELECT	2200uF	20%	25V
C025	1-104-665-11	ELECT	100uF	20%	25V
C026	1-162-974-11	CERAMIC CHIP	0.01uF		50V
C027	1-162-974-11	CERAMIC CHIP	0.01uF		50V
C033	1-126-933-11	ELECT	100uF	20%	16V
C034	1-126-963-11	ELECT	4.7uF	20%	50V
C035	1-126-947-11	ELECT	47uF	20%	35V
C063	1-164-156-11	CERAMIC CHIP	0.1uF		25V
C064	1-162-964-11	CERAMIC CHIP	0.001uF	10%	50V
C109	1-126-964-11	ELECT	10uF	20%	50V
C110	1-126-964-11	ELECT	10uF	20%	50V
C111	1-126-965-11	ELECT	22uF	20%	50V
C114	1-164-156-11	CERAMIC CHIP	0.1uF		25V
C115	1-126-925-91	ELECT	470uF	20%	10V
C116	1-126-960-11	ELECT	1uF	20%	50V
C117	1-162-962-11	CERAMIC CHIP	470PF	10%	50V
C118	1-126-961-11	ELECT	2.2uF	20%	50V
C119	1-126-959-11	ELECT	0.47uF	20%	50V
C120	1-164-156-11	CERAMIC CHIP	0.1uF		25V
C121	1-126-925-91	ELECT	470uF	20%	10V
C122	1-162-970-11	CERAMIC CHIP	0.01uF	10%	25V
C123	1-162-923-11	CERAMIC CHIP	47PF	5%	50V
C125	1-126-964-11	ELECT	10uF	20%	50V
C126	1-126-964-11	ELECT	10uF	20%	50V
C127	1-162-966-11	CERAMIC CHIP	0.0022uF	10%	50V (GT55)
C128	1-162-966-11	CERAMIC CHIP	0.0022uF	10%	50V (GT55)
C129	1-126-960-11	ELECT	1uF	20%	50V
C130	1-126-960-11	ELECT	1uF	20%	50V
C137	1-126-960-11	ELECT	1uF	20%	50V
C138	1-126-960-11	ELECT	1uF	20%	50V
C139	1-107-826-11	CERAMIC CHIP	0.1uF	10%	16V
C140	1-107-826-11	CERAMIC CHIP	0.1uF	10%	16V
C141	1-126-964-11	ELECT	10uF	20%	50V
C142	1-126-964-11	ELECT	10uF	20%	50V
C143	1-137-374-11	MYLAR	0.047uF	5%	50V

Ref. No.	Part No.	Description			Remark
C144	1-137-374-11	MYLAR	0.047uF	5%	50V
C145	1-162-968-11	CERAMIC CHIP	0.0047uF	10%	50V
C146	1-162-968-11	CERAMIC CHIP	0.0047uF	10%	50V
C147	1-164-315-11	CERAMIC CHIP	470PF	5%	50V
C149	1-164-227-11	CERAMIC CHIP	0.022uF	10%	25V
C150	1-164-227-11	CERAMIC CHIP	0.022uF	10%	25V
C151	1-164-227-11	CERAMIC CHIP	0.022uF	10%	25V
C152	1-164-227-11	CERAMIC CHIP	0.022uF	10%	25V
C153	1-126-960-11	ELECT	1uF	20%	50V (GT22/GT44)
C154	1-126-960-11	ELECT	1uF	20%	50V (GT22/GT44)
C155	1-136-167-00	MYLAR	0.15uF	5%	50V (GT22)
C155	1-136-166-00	MYLAR	0.12uF	5%	50V (GT44/GT55)
C156	1-136-167-00	MYLAR	0.15uF	5%	50V (GT22)
C156	1-136-166-00	MYLAR	0.12uF	5%	50V (GT44/GT55)
C157	1-136-167-00	MYLAR	0.15uF	5%	50V (GT22)
C157	1-136-166-00	MYLAR	0.12uF	5%	50V (GT44/GT55)
C158	1-136-167-00	MYLAR	0.15uF	5%	50V (GT22)
C158	1-136-166-00	MYLAR	0.12uF	5%	50V (GT44/GT55)
C160	1-162-962-11	CERAMIC CHIP	470PF	10%	50V
C163	1-125-837-11	CERAMIC CHIP	1uF	10%	6.3V (GT55)
C164	1-125-837-11	CERAMIC CHIP	1uF	10%	6.3V (GT55)
C165	1-125-837-11	CERAMIC CHIP	1uF	10%	6.3V (GT55)
C166	1-125-837-11	CERAMIC CHIP	1uF	10%	6.3V (GT55)
C167	1-104-658-91	ELECT	100uF	20%	10V (GT55)
C168	1-104-658-91	ELECT	100uF	20%	10V (GT55)
C170	1-126-933-11	ELECT	100uF	20%	16V (GT55)
C171	1-162-927-11	CERAMIC CHIP	100PF	5%	50V (GT55)
C172	1-162-927-11	CERAMIC CHIP	100PF	5%	50V (GT55)
C173	1-162-923-11	CERAMIC CHIP	47PF	5%	50V
C174	1-162-923-11	CERAMIC CHIP	47PF	5%	50V
C175	1-125-837-11	CERAMIC CHIP	1uF	10%	6.3V (GT55)
C176	1-125-837-11	CERAMIC CHIP	1uF	10%	6.3V (GT55)
C177	1-125-837-11	CERAMIC CHIP	1uF	10%	6.3V (GT55)
C178	1-125-837-11	CERAMIC CHIP	1uF	10%	6.3V (GT55)
C179	1-162-970-11	CERAMIC CHIP	0.01uF	10%	25V (GT55)
C180	1-126-947-11	ELECT	47uF	20%	35V (GT44/GT55)
C182	1-126-947-11	ELECT	47uF	20%	35V
C211	1-126-961-11	ELECT	2.2uF	20%	50V
C212	1-126-957-11	ELECT	0.22uF	20%	50V
C251	1-162-923-11	CERAMIC CHIP	47PF	5%	50V
C252	1-162-923-11	CERAMIC CHIP	47PF	5%	50V
C253	1-162-919-11	CERAMIC CHIP	22PF	5%	50V
C254	1-162-919-11	CERAMIC CHIP	22PF	5%	50V
C257	1-126-947-11	ELECT	47uF	20%	35V
C258	1-126-947-11	ELECT	47uF	20%	35V
C259	1-126-964-11	ELECT	10uF	20%	50V
C260	1-126-964-11	ELECT	10uF	20%	50V
C263	1-126-935-11	ELECT	470uF	20%	16V
C264	1-162-964-11	CERAMIC CHIP	0.001uF	10%	50V
C267	1-162-968-11	CERAMIC CHIP	0.0047uF	10%	50V
C268	1-162-968-11	CERAMIC CHIP	0.0047uF	10%	50V
C273	1-162-970-11	CERAMIC CHIP	0.01uF	10%	25V (GT44/GT55)
C274	1-107-826-11	CERAMIC CHIP	0.1uF	10%	16V (GT44/GT55)
C275	1-162-962-11	CERAMIC CHIP	470PF	10%	50V (GT44/GT55)
C276	1-107-826-11	CERAMIC CHIP	0.1uF	10%	16V (GT44/GT55)
C277	1-162-913-11	CERAMIC CHIP	8PF	0.5PF	50V (GT44/GT55)
C278	1-126-963-11	ELECT	4.7uF	20%	50V
C279	1-126-963-11	ELECT	4.7uF	20%	50V
C281	1-162-966-11	CERAMIC CHIP	0.0022uF	10%	50V (GT44/GT55)
C282	1-126-964-11	ELECT	10uF	20%	50V (GT44/GT55)
C283	1-126-947-11	ELECT	47uF	20%	35V (GT44/GT55)
C285	1-164-315-11	CERAMIC CHIP	470PF	5%	50V
C289	1-126-933-11	ELECT	100uF	20%	16V (GT44/GT55)
C301	1-126-926-11	ELECT	1000uF	20%	10V
C361	1-164-156-11	CERAMIC CHIP	0.1uF		25V
C362	1-164-156-11	CERAMIC CHIP	0.1uF		25V
C363	1-164-156-11	CERAMIC CHIP	0.1uF		25V
C901	1-114-154-11	DOUBLE LAYER	47000uF		5.5V
C902	1-117-863-11	CERAMIC CHIP	0.47uF	10%	6.3V
C903	1-164-156-11	CERAMIC CHIP	0.1uF		25V
C904	1-162-917-11	CERAMIC CHIP	15PF	5%	50V
C905	1-162-918-11	CERAMIC CHIP	18PF	5%	50V
C908	1-126-934-11	ELECT	220uF	20%	16V
C911	1-126-959-11	ELECT	0.47uF	20%	50V
C912	1-165-176-11	CERAMIC CHIP	0.047uF	10%	16V
C913	1-104-665-11	ELECT	100uF	20%	25V
C914	1-126-947-11	ELECT	47uF	20%	35V
C916	1-104-662-91	ELECT	22uF	20%	25V
C942	1-162-964-11	CERAMIC CHIP	0.001uF	10%	50V
C943	1-164-156-11	CERAMIC CHIP	0.1uF		25V
C946	1-164-156-11	CERAMIC CHIP	0.1uF		25V
C947	1-162-964-11	CERAMIC CHIP	0.001uF	10%	50V
C948	1-164-156-11	CERAMIC CHIP	0.1uF		25V
C950	1-164-156-11	CERAMIC CHIP	0.1uF		25V

MAIN

Ref. No.	Part No.	Description	Remark
		< CONNECTOR >	
CN002	1-815-444-11	PIN, CONNECTOR (PWB) 3P	
* CN031	1-573-094-11	SOCKET, CONNECTOR 13P	
CN041	1-819-131-11	PIN, CONNECTOR 3P	
CN061	1-784-774-11	CONNECTOR, FFC 13P	
CN201	1-568-830-11	CONNECTOR, FFC 11P	
CN202	1-568-830-11	CONNECTOR, FFC 11P	
CN301	1-779-289-11	CONNECTOR, FFC (LIF (NON-ZIF)) 21P	
CN302	1-779-295-11	CONNECTOR, FFC (LIF (NON-ZIF)) 27P	
CN901	1-784-788-11	CONNECTOR, FFC 27P	
CN902	1-784-766-11	CONNECTOR, FFC 5P	
CN903	1-815-447-11	PIN, CONNECTOR (PWB) 6P (GT55)	
		< DIODE >	
D001	8-719-077-76	DIODE D2SB60A-F04	
D006	8-719-404-50	DIODE MA111-TX	
D007	6-501-166-01	DIODE UDZW-TE17-4.7B	
D008	6-501-579-01	DIODE MC2837	
D009	6-500-335-01	DIODE MC2838-T112-1	
D011	6-500-522-21	DIODE 10EDB40-TB3	
D012	6-500-522-21	DIODE 10EDB40-TB3	
D013	6-500-522-21	DIODE 10EDB40-TB3	
D014	6-500-522-21	DIODE 10EDB40-TB3	
D021	6-500-522-21	DIODE 10EDB40-TB3	
D022	6-500-522-21	DIODE 10EDB40-TB3	
D023	6-500-522-21	DIODE 10EDB40-TB3	
D024	6-500-522-21	DIODE 10EDB40-TB3	
D031	8-719-404-50	DIODE MA111-TX	
D036	6-500-334-01	DIODE MC2836-T112-1	
D037	6-500-335-01	DIODE MC2838-T112-1	
D159	8-719-404-50	DIODE MA111-TX	
D211	6-501-579-01	DIODE MC2837	
D212	6-500-334-01	DIODE MC2836-T112-1	
D213	6-501-579-01	DIODE MC2837	
D214	8-719-404-50	DIODE MA111-TX	
D301	6-500-522-21	DIODE 10EDB40-TB3	
D302	6-500-522-21	DIODE 10EDB40-TB3	
D901	6-501-166-01	DIODE UDZW-TE17-4.7B	
D902	6-500-334-01	DIODE MC2836-T112-1	
D903	6-500-334-01	DIODE MC2836-T112-1	
D904	8-719-404-50	DIODE MA111-TX	
D911	6-500-334-01	DIODE MC2836-T112-1	
		< EARTH TERMINAL >	
EP031	1-537-771-21	TERMINAL BOARD, GROUND	
EP061	1-537-771-21	TERMINAL BOARD, GROUND	
		< IC >	
IC006	6-702-771-01	IC TA78033LS	
IC011	8-759-231-56	IC TA7809S	
IC021	8-759-231-56	IC TA7809S	
IC102	6-709-330-01	IC R2S15208SP (GT55)	
IC103	6-709-331-01	IC R2S15207FP	
IC251	8-759-278-58	IC NJM4558V-TE2	
IC252	8-759-278-58	IC NJM4558V-TE2 (GT44/GT55)	
IC301	8-759-523-03	IC TC74HC4066AFT (EL)	
IC302	8-759-523-03	IC TC74HC4066AFT (EL)	
IC303	6-707-870-01	IC TC74VHC157FT (EKJ)	
IC901	(Not supplied)	IC uPD78F1165GF (S)-GAS-AX	
IC902	8-759-713-61	IC PST3429UL	
		< JUMPER RESISTOR >	
JR104	1-216-864-11	SHORT CHIP 0	
JR105	1-216-864-11	SHORT CHIP 0	
JR106	1-216-864-11	SHORT CHIP 0	
JR107	1-216-864-11	SHORT CHIP 0	
JR108	1-216-864-11	SHORT CHIP 0	
JR109	1-216-864-11	SHORT CHIP 0	
JR110	1-216-864-11	SHORT CHIP 0	
JR111	1-216-864-11	SHORT CHIP 0	
JR112	1-216-864-11	SHORT CHIP 0	
JR113	1-216-864-11	SHORT CHIP 0	
JR114	1-216-864-11	SHORT CHIP 0	
JR115	1-216-864-11	SHORT CHIP 0	
JR118	1-216-864-11	SHORT CHIP 0	
JR119	1-216-864-11	SHORT CHIP 0	
JR120	1-216-864-11	SHORT CHIP 0	
		< TRANSISTOR >	
Q011	8-729-027-43	TRANSISTOR DTC114EKA-T146	
Q041	8-729-620-07	TRANSISTOR 2SC3052EF-T1-LEF	
Q042	8-729-037-13	TRANSISTOR KTA1271Y	
Q043	8-729-037-03	TRANSISTOR KTA1266GR-AT	
Q044	8-729-620-07	TRANSISTOR 2SC3052EF-T1-LEF	
Q045	8-729-620-07	TRANSISTOR 2SC3052EF-T1-LEF	
Q046	8-729-045-62	FET 2SK2158-T2B	
Q111	8-729-620-07	TRANSISTOR 2SC3052EF-T1-LEF	
Q112	8-729-620-07	TRANSISTOR 2SC3052EF-T1-LEF	
Q113	8-729-620-07	TRANSISTOR 2SC3052EF-T1-LEF	
Q114	8-729-620-07	TRANSISTOR 2SC3052EF-T1-LEF	
Q121	8-729-620-07	TRANSISTOR 2SC3052EF-T1-LEF	(GT44/GT55)
Q251	8-729-620-07	TRANSISTOR 2SC3052EF-T1-LEF	
Q252	8-729-620-07	TRANSISTOR 2SC3052EF-T1-LEF	
Q261	8-729-027-23	TRANSISTOR DTA114EKA-T146	
Q272	8-729-620-07	TRANSISTOR 2SC3052EF-T1-LEF	(GT44/GT55)
Q274	8-729-620-07	TRANSISTOR 2SC3052EF-T1-LEF	(GT44/GT55)
Q301	8-729-620-07	TRANSISTOR 2SC3052EF-T1-LEF	
Q302	8-729-037-13	TRANSISTOR KTA1271Y	
Q303	6-551-276-01	TRANSISTOR RT1N431C-TP-1	
Q304	8-729-037-13	TRANSISTOR KTA1271Y	
Q901	8-729-037-13	TRANSISTOR KTA1271Y	
Q902	8-729-620-07	TRANSISTOR 2SC3052EF-T1-LEF	
Q903	8-729-620-07	TRANSISTOR 2SC3052EF-T1-LEF	
Q904	6-551-696-01	TRANSISTOR ISA1235AC1TP-1EF	
Q905	8-729-620-07	TRANSISTOR 2SC3052EF-T1-LEF	
Q908	6-551-681-01	TRANSISTOR RT1P431C-TP-1	
Q911	6-551-276-01	TRANSISTOR RT1N431C-TP-1	
Q912	6-551-276-01	TRANSISTOR RT1N431C-TP-1	
Q913	6-551-276-01	TRANSISTOR RT1N431C-TP-1	
Q914	8-729-040-76	TRANSISTOR KTA1273-Y-AT	
Q915	8-729-037-13	TRANSISTOR KTA1271Y	
Q916	8-729-037-13	TRANSISTOR KTA1271Y	

Ref. No.	Part No.	Description			Remark
Q921	8-729-620-07	TRANSISTOR	2SC3052EF-T1-LEF		(GT55)
Q922	8-729-620-07	TRANSISTOR	2SC3052EF-T1-LEF		(GT55)
Q923	8-729-620-07	TRANSISTOR	2SC3052EF-T1-LEF		(GT55)
Q931	8-729-620-07	TRANSISTOR	2SC3052EF-T1-LEF		
		< RESISTOR >			
R001	1-216-801-11	METAL CHIP	22	5%	1/10W
R010	1-216-837-11	METAL CHIP	22K	5%	1/10W
R013	1-216-837-11	METAL CHIP	22K	5%	1/10W
R014	1-216-833-11	METAL CHIP	10K	5%	1/10W
R016	1-216-845-11	METAL CHIP	100K	5%	1/10W
R032	1-216-821-11	METAL CHIP	1K	5%	1/10W
R033	1-216-837-11	METAL CHIP	22K	5%	1/10W
R034	1-216-837-11	METAL CHIP	22K	5%	1/10W
R035	1-216-829-11	METAL CHIP	4.7K	5%	1/10W
R036	1-216-829-11	METAL CHIP	4.7K	5%	1/10W
R037	1-216-829-11	METAL CHIP	4.7K	5%	1/10W
R039	1-260-308-11	CARBON	22	5%	1/2W
R042	1-216-833-11	METAL CHIP	10K	5%	1/10W
R043	1-216-829-11	METAL CHIP	4.7K	5%	1/10W
R045	1-216-821-11	METAL CHIP	1K	5%	1/10W
R046	1-216-793-11	METAL CHIP	4.7	5%	1/10W
R047	1-216-789-11	METAL CHIP	2.2	5%	1/10W
R048	1-216-801-11	METAL CHIP	22	5%	1/10W
R049	1-216-849-11	METAL CHIP	220K	5%	1/10W
R050	1-216-825-11	METAL CHIP	2.2K	5%	1/10W
R051	1-216-825-11	METAL CHIP	2.2K	5%	1/10W
R052	1-216-853-11	METAL CHIP	470K	5%	1/10W
R053	1-216-837-11	METAL CHIP	22K	5%	1/10W
R054	1-216-837-11	METAL CHIP	22K	5%	1/10W
R055	1-216-825-11	METAL CHIP	2.2K	5%	1/10W
R057	1-216-821-11	METAL CHIP	1K	5%	1/10W
⚠R059	1-215-892-11	METAL OXIDE	1K	5%	2W F
⚠R060	1-215-892-11	METAL OXIDE	1K	5%	2W F
R061	1-216-797-11	METAL CHIP	10	5%	1/10W
R063	1-216-809-11	METAL CHIP	100	5%	1/10W
R064	1-216-809-11	METAL CHIP	100	5%	1/10W
R068	1-216-797-11	METAL CHIP	10	5%	1/10W
R101	1-216-829-11	METAL CHIP	4.7K	5%	1/10W
R105	1-216-805-11	METAL CHIP	47	5%	1/10W
R108	1-216-833-11	METAL CHIP	10K	5%	1/10W
R110	1-216-841-11	METAL CHIP	47K	5%	1/10W
R111	1-216-845-11	METAL CHIP	100K	5%	1/10W
R112	1-216-817-11	METAL CHIP	470	5%	1/10W
R113	1-216-829-11	METAL CHIP	4.7K	5%	1/10W
R114	1-216-819-11	METAL CHIP	680	5%	1/10W
R116	1-216-809-11	METAL CHIP	100	5%	1/10W
R119	1-216-825-11	METAL CHIP	2.2K	5%	1/10W
R120	1-216-825-11	METAL CHIP	2.2K	5%	1/10W
R121	1-216-809-11	METAL CHIP	100	5%	1/10W
R122	1-216-809-11	METAL CHIP	100	5%	1/10W
R123	1-216-825-11	METAL CHIP	2.2K	5%	1/10W
R124	1-216-825-11	METAL CHIP	2.2K	5%	1/10W
R125	1-218-867-11	METAL CHIP	6.8K	0.5%	1/10W
R126	1-218-867-11	METAL CHIP	6.8K	0.5%	1/10W
R127	1-216-836-11	METAL CHIP	18K	5%	1/10W
R128	1-216-836-11	METAL CHIP	18K	5%	1/10W

Ref. No.	Part No.	Description			Remark
R129	1-216-842-11	METAL CHIP	56K	5%	1/10W
		(GT22: E3, E13, E51, MX, AR, AUS/GT44: E3, E13, E51, MX, AR, AUS/GT55: E51, MX, AR)			
R129	1-216-838-11	METAL CHIP	27K	5%	1/10W
		(GT22: E2/GT44: E2/GT55: E2)			
R130	1-216-842-11	METAL CHIP	56K	5%	1/10W
		(GT22: E3, E13, E51, MX, AR, AUS/GT44: E3, E13, E51, MX, AR, AUS/GT55: E51, MX, AR)			
R130	1-216-838-11	METAL CHIP	27K	5%	1/10W
		(GT22: E2/GT44: E2/GT55: E2)			
R131	1-216-809-11	METAL CHIP	100	5%	1/10W
R133	1-216-821-11	METAL CHIP	1K	5%	1/10W
R134	1-216-821-11	METAL CHIP	1K	5%	1/10W
R135	1-216-833-11	METAL CHIP	10K	5%	1/10W
R136	1-216-833-11	METAL CHIP	10K	5%	1/10W
R137	1-216-825-11	METAL CHIP	2.2K	5%	1/10W
R138	1-216-825-11	METAL CHIP	2.2K	5%	1/10W
R139	1-216-822-11	METAL CHIP	1.2K	5%	1/10W (GT22)
R139	1-216-824-11	METAL CHIP	1.8K	5%	1/10W (GT44/GT55)
R140	1-216-822-11	METAL CHIP	1.2K	5%	1/10W (GT22)
R140	1-216-824-11	METAL CHIP	1.8K	5%	1/10W (GT44/GT55)
R141	1-216-837-11	METAL CHIP	22K	5%	1/10W (GT44/GT55)
R142	1-216-837-11	METAL CHIP	22K	5%	1/10W (GT44/GT55)
R143	1-216-813-11	METAL CHIP	220	5%	1/10W
R144	1-216-813-11	METAL CHIP	220	5%	1/10W
R145	1-216-842-11	METAL CHIP	56K	5%	1/10W
R147	1-216-841-11	METAL CHIP	47K	5%	1/10W
R148	1-216-841-11	METAL CHIP	47K	5%	1/10W
R151	1-216-809-11	METAL CHIP	100	5%	1/10W (GT55)
R152	1-216-809-11	METAL CHIP	100	5%	1/10W (GT55)
R153	1-216-809-11	METAL CHIP	100	5%	1/10W (GT55)
R155	1-216-849-11	METAL CHIP	220K	5%	1/10W
R156	1-216-849-11	METAL CHIP	220K	5%	1/10W
R157	1-216-849-11	METAL CHIP	220K	5%	1/10W
R158	1-216-849-11	METAL CHIP	220K	5%	1/10W
R159	1-216-841-11	METAL CHIP	47K	5%	1/10W
R160	1-216-841-11	METAL CHIP	47K	5%	1/10W
R161	1-216-835-11	METAL CHIP	15K	5%	1/10W
R162	1-216-835-11	METAL CHIP	15K	5%	1/10W
R163	1-216-857-11	METAL CHIP	1M	5%	1/10W
R164	1-216-809-11	METAL CHIP	100	5%	1/10W
R165	1-216-837-11	METAL CHIP	22K	5%	1/10W
R166	1-216-837-11	METAL CHIP	22K	5%	1/10W
R169	1-216-845-11	METAL CHIP	100K	5%	1/10W
R170	1-216-845-11	METAL CHIP	100K	5%	1/10W
R173	1-216-846-11	METAL CHIP	120K	5%	1/10W (GT44/GT55)
R174	1-216-849-11	METAL CHIP	220K	5%	1/10W (GT44/GT55)
R175	1-216-825-11	METAL CHIP	2.2K	5%	1/10W (GT44/GT55)
R201	1-216-825-11	METAL CHIP	2.2K	5%	1/10W

MAIN

Ref. No.	Part No.	Description			Remark
R202	1-216-825-11	METAL CHIP	2.2K	5%	1/10W
R211	1-216-832-11	METAL CHIP	8.2K	5%	1/10W
R212	1-216-825-11	METAL CHIP	2.2K	5%	1/10W
R213	1-216-829-11	METAL CHIP	4.7K	5%	1/10W
R214	1-216-849-11	METAL CHIP	220K	5%	1/10W
R215	1-216-849-11	METAL CHIP	220K	5%	1/10W
R216	1-216-813-11	METAL CHIP	220	5%	1/10W
R217	1-216-813-11	METAL CHIP	220	5%	1/10W
R221	1-216-829-11	METAL CHIP	4.7K	5%	1/10W
R222	1-216-829-11	METAL CHIP	4.7K	5%	1/10W
R223	1-216-829-11	METAL CHIP	4.7K	5%	1/10W
R224	1-216-829-11	METAL CHIP	4.7K	5%	1/10W
R225	1-216-829-11	METAL CHIP	4.7K	5%	1/10W
R226	1-216-837-11	METAL CHIP	22K	5%	1/10W
R227	1-216-837-11	METAL CHIP	22K	5%	1/10W
R228	1-216-837-11	METAL CHIP	22K	5%	1/10W
R229	1-216-837-11	METAL CHIP	22K	5%	1/10W
R230	1-216-837-11	METAL CHIP	22K	5%	1/10W
R231	1-216-837-11	METAL CHIP	22K	5%	1/10W
R232	1-216-837-11	METAL CHIP	22K	5%	1/10W
R234	1-216-837-11	METAL CHIP	22K	5%	1/10W
R251	1-216-826-11	METAL CHIP	2.7K	5%	1/10W (GT44)
R251	1-216-829-11	METAL CHIP	4.7K	5%	1/10W (GT55)
R251	1-216-830-11	METAL CHIP	5.6K	5%	1/10W (GT22)
R252	1-216-826-11	METAL CHIP	2.7K	5%	1/10W (GT44)
R252	1-216-829-11	METAL CHIP	4.7K	5%	1/10W (GT55)
R252	1-216-830-11	METAL CHIP	5.6K	5%	1/10W (GT22)
R253	1-216-829-11	METAL CHIP	4.7K	5%	1/10W (GT44)
R253	1-216-833-11	METAL CHIP	10K	5%	1/10W (GT22/GT55)
R254	1-216-829-11	METAL CHIP	4.7K	5%	1/10W (GT44)
R254	1-216-833-11	METAL CHIP	10K	5%	1/10W (GT22/GT55)
R255	1-216-817-11	METAL CHIP	470	5%	1/10W
R256	1-216-817-11	METAL CHIP	470	5%	1/10W
R261	1-216-833-11	METAL CHIP	10K	5%	1/10W
R262	1-216-833-11	METAL CHIP	10K	5%	1/10W
R263	1-216-825-11	METAL CHIP	2.2K	5%	1/10W
R264	1-216-825-11	METAL CHIP	2.2K	5%	1/10W
R265	1-216-809-11	METAL CHIP	100	5%	1/10W
R267	1-216-841-11	METAL CHIP	47K	5%	1/10W
R268	1-216-829-11	METAL CHIP	4.7K	5%	1/10W
R274	1-216-839-11	METAL CHIP	33K	5%	1/10W (GT44/GT55)
R276	1-216-845-11	METAL CHIP	100K	5%	1/10W (GT44/GT55)
R277	1-216-845-11	METAL CHIP	100K	5%	1/10W (GT44/GT55)
R278	1-216-829-11	METAL CHIP	4.7K	5%	1/10W (GT44/GT55)
R279	1-216-835-11	METAL CHIP	15K	5%	1/10W (GT55)
R279	1-216-836-11	METAL CHIP	18K	5%	1/10W (GT44)
R280	1-216-821-11	METAL CHIP	1K	5%	1/10W (GT44/GT55)
R281	1-216-825-11	METAL CHIP	2.2K	5%	1/10W (GT44/GT55)
R285	1-216-846-11	METAL CHIP	120K	5%	1/10W (GT44/GT55)
R286	1-216-841-11	METAL CHIP	47K	5%	1/10W (GT44/GT55)
R289	1-216-841-11	METAL CHIP	47K	5%	1/10W (GT44/GT55)
R290	1-216-841-11	METAL CHIP	47K	5%	1/10W (GT44/GT55)
R291	1-216-817-11	METAL CHIP	470	5%	1/10W
R292	1-216-817-11	METAL CHIP	470	5%	1/10W
R293	1-216-833-11	METAL CHIP	10K	5%	1/10W
R301	1-216-817-11	METAL CHIP	470	5%	1/10W
R302	1-216-833-11	METAL CHIP	10K	5%	1/10W
R303	1-216-809-11	METAL CHIP	100	5%	1/10W
R304	1-216-809-11	METAL CHIP	100	5%	1/10W
R305	1-216-809-11	METAL CHIP	100	5%	1/10W
R306	1-216-809-11	METAL CHIP	100	5%	1/10W
R307	1-216-809-11	METAL CHIP	100	5%	1/10W
R308	1-216-809-11	METAL CHIP	100	5%	1/10W
R309	1-216-809-11	METAL CHIP	100	5%	1/10W
R310	1-216-809-11	METAL CHIP	100	5%	1/10W
R311	1-216-809-11	METAL CHIP	100	5%	1/10W
R312	1-216-845-11	METAL CHIP	100K	5%	1/10W
R321	1-216-809-11	METAL CHIP	100	5%	1/10W
R322	1-216-809-11	METAL CHIP	100	5%	1/10W
R323	1-216-809-11	METAL CHIP	100	5%	1/10W
R324	1-216-809-11	METAL CHIP	100	5%	1/10W
R325	1-216-809-11	METAL CHIP	100	5%	1/10W
R326	1-216-809-11	METAL CHIP	100	5%	1/10W
R327	1-216-809-11	METAL CHIP	100	5%	1/10W
R328	1-216-809-11	METAL CHIP	100	5%	1/10W
R330	1-216-809-11	METAL CHIP	100	5%	1/10W
R332	1-216-809-11	METAL CHIP	100	5%	1/10W
R333	1-216-817-11	METAL CHIP	470	5%	1/10W
R334	1-216-833-11	METAL CHIP	10K	5%	1/10W
R341	1-216-809-11	METAL CHIP	100	5%	1/10W
R342	1-216-809-11	METAL CHIP	100	5%	1/10W
R343	1-216-809-11	METAL CHIP	100	5%	1/10W
R344	1-216-809-11	METAL CHIP	100	5%	1/10W
R345	1-216-809-11	METAL CHIP	100	5%	1/10W
R346	1-216-809-11	METAL CHIP	100	5%	1/10W
R352	1-216-809-11	METAL CHIP	100	5%	1/10W
R353	1-216-809-11	METAL CHIP	100	5%	1/10W
R354	1-216-809-11	METAL CHIP	100	5%	1/10W
R355	1-216-845-11	METAL CHIP	100K	5%	1/10W
R361	1-216-833-11	METAL CHIP	10K	5%	1/10W
R362	1-216-833-11	METAL CHIP	10K	5%	1/10W
R901	1-216-864-11	SHORT CHIP	0		
R908	1-216-841-11	METAL CHIP	47K	5%	1/10W
R909	1-216-845-11	METAL CHIP	100K	5%	1/10W
R910	1-216-833-11	METAL CHIP	10K	5%	1/10W
R911	1-216-821-11	METAL CHIP	1K	5%	1/10W
R912	1-216-821-11	METAL CHIP	1K	5%	1/10W

Ref. No.	Part No.	Description			Remark
R913	1-216-821-11	METAL CHIP	1K	5%	1/10W
R914	1-216-833-11	METAL CHIP	10K	5%	1/10W
R915	1-216-833-11	METAL CHIP	10K	5%	1/10W
R916	1-216-833-11	METAL CHIP	10K	5%	1/10W
R917	1-216-841-11	METAL CHIP	47K	5%	1/10W
R918	1-216-837-11	METAL CHIP	22K	5%	1/10W
R919	1-216-841-11	METAL CHIP	47K	5%	1/10W
R920	1-216-797-11	METAL CHIP	10	5%	1/10W
R921	1-216-845-11	METAL CHIP	100K	5%	1/10W
R922	1-216-833-11	METAL CHIP	10K	5%	1/10W
R923	1-216-825-11	METAL CHIP	2.2K	5%	1/10W
R925	1-216-837-11	METAL CHIP	22K	5%	1/10W
R926	1-216-837-11	METAL CHIP	22K	5%	1/10W
R927	1-216-841-11	METAL CHIP	47K	5%	1/10W
R928	1-216-829-11	METAL CHIP	4.7K	5%	1/10W
R929	1-216-809-11	METAL CHIP	100	5%	1/10W
R932	1-216-833-11	METAL CHIP	10K	5%	1/10W (GT44/GT55)
R933	1-216-833-11	METAL CHIP	10K	5%	1/10W
R934	1-216-833-11	METAL CHIP	10K	5%	1/10W
R935	1-216-833-11	METAL CHIP	10K	5%	1/10W
R936	1-216-833-11	METAL CHIP	10K	5%	1/10W
R937	1-216-833-11	METAL CHIP	10K	5%	1/10W
R938	1-216-809-11	METAL CHIP	100	5%	1/10W
R939	1-216-809-11	METAL CHIP	100	5%	1/10W
R940	1-216-809-11	METAL CHIP	100	5%	1/10W
R941	1-216-845-11	METAL CHIP	100K	5%	1/10W
R942	1-216-845-11	METAL CHIP	100K	5%	1/10W
R943	1-216-845-11	METAL CHIP	100K	5%	1/10W
R944	1-216-845-11	METAL CHIP	100K	5%	1/10W
R945	1-216-809-11	METAL CHIP	100	5%	1/10W
R946	1-216-809-11	METAL CHIP	100	5%	1/10W
R947	1-216-809-11	METAL CHIP	100	5%	1/10W
R948	1-216-809-11	METAL CHIP	100	5%	1/10W
R949	1-216-809-11	METAL CHIP	100	5%	1/10W
R950	1-216-809-11	METAL CHIP	100	5%	1/10W
R951	1-216-809-11	METAL CHIP	100	5%	1/10W
R952	1-216-809-11	METAL CHIP	100	5%	1/10W
R953	1-216-809-11	METAL CHIP	100	5%	1/10W
R954	1-216-809-11	METAL CHIP	100	5%	1/10W
R955	1-216-837-11	METAL CHIP	22K	5%	1/10W
R956	1-216-809-11	METAL CHIP	100	5%	1/10W
R957	1-216-837-11	METAL CHIP	22K	5%	1/10W
R958	1-216-837-11	METAL CHIP	22K	5%	1/10W
R959	1-216-837-11	METAL CHIP	22K	5%	1/10W
R960	1-216-837-11	METAL CHIP	22K	5%	1/10W
R961	1-216-837-11	METAL CHIP	22K	5%	1/10W
R962	1-216-837-11	METAL CHIP	22K	5%	1/10W
R963	1-216-833-11	METAL CHIP	10K	5%	1/10W
R964	1-216-827-11	METAL CHIP	3.3K	5%	1/10W
R965	1-216-821-11	METAL CHIP	1K	5%	1/10W
R966	1-216-849-11	METAL CHIP	220K	5%	1/10W
R968	1-216-821-11	METAL CHIP	1K	5%	1/10W
R969	1-216-821-11	METAL CHIP	1K	5%	1/10W
R970	1-216-821-11	METAL CHIP	1K	5%	1/10W
R971	1-216-821-11	METAL CHIP	1K	5%	1/10W
R972	1-216-809-11	METAL CHIP	100	5%	1/10W
R973	1-216-809-11	METAL CHIP	100	5%	1/10W
R974	1-216-809-11	METAL CHIP	100	5%	1/10W
R975	1-216-809-11	METAL CHIP	100	5%	1/10W
R976	1-216-809-11	METAL CHIP	100	5%	1/10W
R977	1-216-809-11	METAL CHIP	100	5%	1/10W
R979	1-216-821-11	METAL CHIP	1K	5%	1/10W
R980	1-216-833-11	METAL CHIP	10K	5%	1/10W
R981	1-216-833-11	METAL CHIP	10K	5%	1/10W (GT22: E2, E51, MX, AR/GT44: E2, E51, MX, AR/GT55)
R982	1-216-833-11	METAL CHIP	10K	5%	1/10W (GT22: E2, E51, MX, AR/GT44: E2, E51, MX, AR/GT55)
R983	1-216-833-11	METAL CHIP	10K	5%	1/10W (GT22: AUS/GT44: AUS)
R984	1-216-833-11	METAL CHIP	10K	5%	1/10W
R987	1-216-821-11	METAL CHIP	1K	5%	1/10W (GT55)
R987	1-216-833-11	METAL CHIP	10K	5%	1/10W (GT44)
R988	1-216-845-11	METAL CHIP	100K	5%	1/10W
R989	1-216-825-11	METAL CHIP	2.2K	5%	1/10W
R990	1-216-809-11	METAL CHIP	100	5%	1/10W
R991	1-216-809-11	METAL CHIP	100	5%	1/10W
R992	1-216-833-11	METAL CHIP	10K	5%	1/10W
R993	1-216-845-11	METAL CHIP	100K	5%	1/10W (GT22/GT44)
R994	1-216-833-11	METAL CHIP	10K	5%	1/10W
R995	1-216-845-11	METAL CHIP	100K	5%	1/10W (GT22/GT44)
R996	1-216-833-11	METAL CHIP	10K	5%	1/10W
R997	1-216-845-11	METAL CHIP	100K	5%	1/10W (GT22/GT44)
R999	1-216-833-11	METAL CHIP	10K	5%	1/10W
		< VIBRATOR >			
X901	1-813-994-11	VIBRATOR, CRYSTAL (32.786kHz)			
X902	1-795-721-21	VIBRATOR, CERAMIC (20MHz)			

****

MIC BOARD
****

< CAPACITOR >

Ref. No.	Part No.	Description			Remark
C801	1-164-156-11	CERAMIC CHIP	0.1uF		25V
C802	1-126-157-11	ELECT	10uF	20%	16V
C803	1-115-416-11	CERAMIC CHIP	0.001uF	5%	25V
C804	1-136-157-00	FILM	0.022uF	5%	50V
C805	1-136-157-00	FILM	0.022uF	5%	50V
C806	1-115-416-11	CERAMIC CHIP	0.001uF	5%	25V
C807	1-164-230-11	CERAMIC CHIP	220PF	5%	50V
C808	1-126-157-11	ELECT	10uF	20%	16V
C809	1-164-315-11	CERAMIC CHIP	470PF	5%	50V
C810	1-124-463-00	ELECT	0.1uF	20%	50V
C811	1-125-972-11	ELECT	100uF	20%	16V
C812	1-162-923-11	CERAMIC CHIP	47PF	5%	50V
C813	1-124-257-00	ELECT	2.2uF	20%	50V
C814	1-126-157-11	ELECT	10uF	20%	16V
C815	1-164-230-11	CERAMIC CHIP	220PF	5%	50V
C816	1-124-257-00	ELECT	2.2uF	20%	50V

MIC | MOTOR (LD) | MOTOR (TB) | PANEL

Ref. No.	Part No.	Description			Remark
C817	1-164-156-11	CERAMIC CHIP	0.1uF		25V
C821	1-164-156-11	CERAMIC CHIP	0.1uF		25V
C822	1-164-156-11	CERAMIC CHIP	0.1uF		25V
C823	1-162-964-11	CERAMIC CHIP	0.001uF	10%	50V
C824	1-162-964-11	CERAMIC CHIP	0.001uF	10%	50V
C827	1-126-176-11	ELECT	220uF	20%	10V
C828	1-165-989-11	CERAMIC CHIP	10uF	10%	6.3V
		< CONNECTOR >			
CN803	1-817-109-21	CONNECTOR, USB (A) (USB)			
		< LED >			
D801	8-719-059-98	LED SLR-342VC3F (REC (USB))			
		< EARTH TERMINAL >			
ET801	1-537-771-21	TERMINAL BOARD, GROUND			
ET802	1-537-771-21	TERMINAL BOARD, GROUND			
ET803	1-537-771-21	TERMINAL BOARD, GROUND			
		< IC >			
IC801	8-759-278-58	IC NJM4558V-TE2			
		< JACK >			
J801	1-816-573-11	JACK (MIC)			
J802	1-764-767-21	PIN JACK 2P (AUDIO)			
J803	1-794-702-11	JACK, HEADPHONE (PHONES)			
		< TRANSISTOR >			
Q801	8-729-620-07	TRANSISTOR	2SC3052EF-T1-LEF		
		< RESISTOR >			
R802	1-216-829-11	METAL CHIP	4.7K	5%	1/10W
R803	1-216-845-11	METAL CHIP	100K	5%	1/10W
R804	1-216-845-11	METAL CHIP	100K	5%	1/10W
R805	1-216-833-11	METAL CHIP	10K	5%	1/10W
R806	1-216-833-11	METAL CHIP	10K	5%	1/10W
R807	1-216-845-11	METAL CHIP	100K	5%	1/10W
R808	1-216-821-11	METAL CHIP	1K	5%	1/10W
R809	1-216-841-11	METAL CHIP	47K	5%	1/10W
R810	1-216-849-11	METAL CHIP	220K	5%	1/10W
R811	1-216-809-11	METAL CHIP	100	5%	1/10W
R812	1-216-829-11	METAL CHIP	4.7K	5%	1/10W
R813	1-216-829-11	METAL CHIP	4.7K	5%	1/10W
R814	1-216-833-11	METAL CHIP	10K	5%	1/10W
R815	1-216-849-11	METAL CHIP	220K	5%	1/10W
R816	1-216-809-11	METAL CHIP	100	5%	1/10W
R817	1-216-845-11	METAL CHIP	100K	5%	1/10W
R821	1-216-821-11	METAL CHIP	1K	5%	1/10W
R822	1-216-821-11	METAL CHIP	1K	5%	1/10W
R823	1-216-853-11	METAL CHIP	470K	5%	1/10W
R824	1-216-853-11	METAL CHIP	470K	5%	1/10W
R831	1-216-821-11	METAL CHIP	1K	5%	1/10W
R832	1-216-821-11	METAL CHIP	1K	5%	1/10W
R841	1-216-845-11	METAL CHIP	100K	5%	1/10W
R842	1-216-836-11	METAL CHIP	18K	5%	1/10W
R843	1-216-833-11	METAL CHIP	10K	5%	1/10W
R844	1-216-841-11	METAL CHIP	47K	5%	1/10W
R845	1-216-836-11	METAL CHIP	18K	5%	1/10W
R846	1-216-833-11	METAL CHIP	10K	5%	1/10W
		< VARIABLE RESISTOR >			
RV801	1-223-983-11	RES, VAR, CARBON		50K (MIC LEVEL)	
**********					
	1-687-133-12	MOTOR (LD) BOARD			
		**********			
**********					
	1-687-134-12	MOTOR (TB) BOARD			
		**********			
		< CONNECTOR >			
CN742	1-784-727-11	CONNECTOR, FFC 5P			
**********					
	A-1234-752-A	PANEL BOARD, COMPLETE (GT55: E2, E51, AR)			
	A-1234-753-A	PANEL BOARD, COMPLETE (GT44: E2, E3, E13, E51, AR, AUS)			
	A-1234-754-A	PANEL BOARD, COMPLETE (GT22: E2, E3, E13, E51, AR, AUS)			
	A-1283-432-A	PANEL BOARD, COMPLETE (GT55: MX)			
	A-1283-433-A	PANEL BOARD, COMPLETE (GT44: MX)			
	A-1283-434-A	PANEL BOARD, COMPLETE (GT22: MX)			
		**********			
	2-891-922-01	HOLDER (FL)			
		< CAPACITOR >			
C701	1-162-964-11	CERAMIC CHIP	0.001uF	10%	50V
C702	1-162-964-11	CERAMIC CHIP	0.001uF	10%	50V
C703	1-162-964-11	CERAMIC CHIP	0.001uF	10%	50V
C704	1-162-964-11	CERAMIC CHIP	0.001uF	10%	50V
C705	1-162-927-11	CERAMIC CHIP	100PF	5%	50V
C706	1-164-156-11	CERAMIC CHIP	0.1uF		25V
C707	1-126-947-11	ELECT	47uF	20%	35V
C708	1-165-621-11	CERAMIC CHIP	0.1uF		50V
C709	1-126-965-11	ELECT	22uF	20%	50V
C731	1-124-257-00	ELECT	2.2uF	20%	50V
C732	1-124-257-00	ELECT	2.2uF	20%	50V
		< CONNECTOR >			
CN601	1-784-788-11	CONNECTOR, FFC 27P			
CN605	1-824-027-21	HOLDER, CABLE 3P			
		< LED >			
D601	6-501-451-01	LED 1L4344B22COCDT02 (STREAM) (GT55)			
D601	6-501-691-01	LED 1L434FV22D0TDF01 (STREAM) (GT22/GT44)			
D602	6-501-451-01	LED 1L4344B22COCDT02 (STREAM) (GT55)			
D602	6-501-691-01	LED 1L434FV22D0TDF01 (STREAM) (GT22/GT44)			
D603	6-501-451-01	LED 1L4344B22COCDT02 (STREAM) (GT55)			
D603	6-501-691-01	LED 1L434FV22D0TDF01 (STREAM) (GT22/GT44)			
D604	6-501-451-01	LED 1L4344B22COCDT02 (STREAM) (GT55)			

PANEL

Ref. No.	Part No.	Description	Remark
D604	6-501-691-01	LED 1L434FV22D0TDF01 (STREAM)	(GT22/GT44)
D605	6-501-451-01	LED 1L4344B22COCDT02 (STREAM)	(GT55)
D605	6-501-691-01	LED 1L434FV22D0TDF01 (STREAM)	(GT22/GT44)
D606	6-501-451-01	LED 1L4344B22COCDT02 (STREAM)	(GT55)
D606	6-501-691-01	LED 1L434FV22D0TDF01 (STREAM)	(GT22/GT44)
		< FLUORESCENT INDICATOR TUBE >	
FL701	1-519-926-11	INDICATOR TUBE, FLUORESCENT	
		< IC >	
IC701	6-709-115-01	IC NJU3427FA2	
		< TRANSISTOR >	
Q601	8-729-620-07	TRANSISTOR 2SC3052EF-T1-LEF	
Q602	8-729-620-07	TRANSISTOR 2SC3052EF-T1-LEF	
Q603	8-729-620-07	TRANSISTOR 2SC3052EF-T1-LEF	
Q604	8-729-620-07	TRANSISTOR 2SC3052EF-T1-LEF	
Q605	8-729-620-07	TRANSISTOR 2SC3052EF-T1-LEF	
Q606	8-729-620-07	TRANSISTOR 2SC3052EF-T1-LEF	
Q607	8-729-620-07	TRANSISTOR 2SC3052EF-T1-LEF	(GT44/GT55)
Q701	8-729-620-07	TRANSISTOR 2SC3052EF-T1-LEF	
Q702	8-729-620-07	TRANSISTOR 2SC3052EF-T1-LEF	
Q703	8-729-620-07	TRANSISTOR 2SC3052EF-T1-LEF	
Q704	8-729-620-07	TRANSISTOR 2SC3052EF-T1-LEF	
Q705	8-729-620-07	TRANSISTOR 2SC3052EF-T1-LEF	
Q706	8-729-620-07	TRANSISTOR 2SC3052EF-T1-LEF	
Q707	8-729-620-07	TRANSISTOR 2SC3052EF-T1-LEF	
Q708	8-729-620-07	TRANSISTOR 2SC3052EF-T1-LEF	
Q709	8-729-620-07	TRANSISTOR 2SC3052EF-T1-LEF	
Q710	8-729-620-07	TRANSISTOR 2SC3052EF-T1-LEF	
Q711	8-729-620-07	TRANSISTOR 2SC3052EF-T1-LEF	
Q712	8-729-620-07	TRANSISTOR 2SC3052EF-T1-LEF	
Q713	8-729-620-07	TRANSISTOR 2SC3052EF-T1-LEF	
Q714	8-729-620-07	TRANSISTOR 2SC3052EF-T1-LEF	
		< RESISTOR >	
R601	1-216-815-11	METAL CHIP 330 5%	1/10W
R611	1-216-815-11	METAL CHIP 330 5%	1/10W
R612	1-216-817-11	METAL CHIP 470 5%	1/10W
R613	1-216-819-11	METAL CHIP 680 5%	1/10W
R614	1-216-821-11	METAL CHIP 1K 5%	1/10W
R615	1-216-823-11	METAL CHIP 1.5K 5%	1/10W
R621	1-216-815-11	METAL CHIP 330 5%	1/10W
R622	1-216-817-11	METAL CHIP 470 5%	1/10W
R623	1-216-819-11	METAL CHIP 680 5%	1/10W
R624	1-216-821-11	METAL CHIP 1K 5%	1/10W
R625	1-216-823-11	METAL CHIP 1.5K 5%	1/10W
R626	1-216-825-11	METAL CHIP 2.2K 5%	1/10W
R661	1-216-821-11	METAL CHIP 1K 5%	1/10W
R662	1-216-821-11	METAL CHIP 1K 5%	1/10W
R663	1-216-821-11	METAL CHIP 1K 5%	1/10W
R664	1-216-821-11	METAL CHIP 1K 5%	1/10W
R665	1-216-821-11	METAL CHIP 1K 5%	1/10W
R666	1-216-821-11	METAL CHIP 1K 5%	1/10W
R671	1-216-821-11	METAL CHIP 1K 5%	1/10W
R672	1-216-821-11	METAL CHIP 1K 5%	1/10W
R673	1-216-821-11	METAL CHIP 1K 5%	1/10W
R674	1-216-821-11	METAL CHIP 1K 5%	1/10W
R675	1-216-821-11	METAL CHIP 1K 5%	1/10W
R676	1-216-821-11	METAL CHIP 1K 5%	1/10W
R681	1-216-833-11	METAL CHIP 10K 5%	1/10W
R682	1-216-833-11	METAL CHIP 10K 5%	1/10W
R683	1-216-833-11	METAL CHIP 10K 5%	1/10W
R684	1-216-833-11	METAL CHIP 10K 5%	1/10W
R685	1-216-833-11	METAL CHIP 10K 5%	1/10W
R686	1-216-833-11	METAL CHIP 10K 5%	1/10W
R687	1-216-833-11	METAL CHIP 10K 5%	1/10W (GT44/GT55)
R701	1-216-809-11	METAL CHIP 100 5%	1/10W
R702	1-216-809-11	METAL CHIP 100 5%	1/10W
R703	1-216-809-11	METAL CHIP 100 5%	1/10W
R704	1-216-809-11	METAL CHIP 100 5%	1/10W
R705	1-216-829-11	METAL CHIP 4.7K 5%	1/10W
R711	1-216-841-11	METAL CHIP 47K 5%	1/10W
R712	1-216-841-11	METAL CHIP 47K 5%	1/10W
R713	1-216-823-11	METAL CHIP 1.5K 5%	1/10W
R714	1-216-823-11	METAL CHIP 1.5K 5%	1/10W
R715	1-216-801-11	METAL CHIP 22 5%	1/10W
R716	1-216-801-11	METAL CHIP 22 5%	1/10W
R721	1-216-841-11	METAL CHIP 47K 5%	1/10W
R722	1-216-841-11	METAL CHIP 47K 5%	1/10W
R723	1-216-841-11	METAL CHIP 47K 5%	1/10W
R724	1-216-841-11	METAL CHIP 47K 5%	1/10W
R725	1-216-841-11	METAL CHIP 47K 5%	1/10W
R726	1-216-841-11	METAL CHIP 47K 5%	1/10W
R727	1-216-841-11	METAL CHIP 47K 5%	1/10W
R728	1-216-841-11	METAL CHIP 47K 5%	1/10W
R729	1-216-841-11	METAL CHIP 47K 5%	1/10W
R730	1-216-841-11	METAL CHIP 47K 5%	1/10W
R731	1-216-841-11	METAL CHIP 47K 5%	1/10W
R732	1-216-841-11	METAL CHIP 47K 5%	1/10W
R733	1-216-841-11	METAL CHIP 47K 5%	1/10W
R734	1-216-841-11	METAL CHIP 47K 5%	1/10W
R741	1-216-841-11	METAL CHIP 47K 5%	1/10W
R742	1-216-841-11	METAL CHIP 47K 5%	1/10W
R743	1-216-841-11	METAL CHIP 47K 5%	1/10W
R744	1-216-841-11	METAL CHIP 47K 5%	1/10W
R745	1-216-841-11	METAL CHIP 47K 5%	1/10W
R746	1-216-841-11	METAL CHIP 47K 5%	1/10W
R747	1-216-841-11	METAL CHIP 47K 5%	1/10W
R748	1-216-841-11	METAL CHIP 47K 5%	1/10W
R749	1-216-841-11	METAL CHIP 47K 5%	1/10W
R750	1-216-841-11	METAL CHIP 47K 5%	1/10W
R751	1-216-841-11	METAL CHIP 47K 5%	1/10W
R752	1-216-841-11	METAL CHIP 47K 5%	1/10W
R753	1-216-841-11	METAL CHIP 47K 5%	1/10W
R754	1-216-841-11	METAL CHIP 47K 5%	1/10W
R755	1-216-827-11	METAL CHIP 3.3K 5%	1/10W
R756	1-216-827-11	METAL CHIP 3.3K 5%	1/10W
R757	1-216-827-11	METAL CHIP 3.3K 5%	1/10W
R758	1-216-827-11	METAL CHIP 3.3K 5%	1/10W

PANEL **SENSOR** **SUB WOOFER**

Ref. No.	Part No.	Description				Remark
		< SWITCH >				
S601	1-762-875-21	SWITCH, KEYBOARD (DISPLAY)				
S611	1-762-875-21	SWITCH, KEYBOARD (ILLUMINATION)				
S612	1-762-875-21	SWITCH, KEYBOARD (ERASE)				
S613	1-762-875-21	SWITCH, KEYBOARD (PRESET EQ)				
S614	1-762-875-21	SWITCH, KEYBOARD (GROOVE)				
S615	1-762-875-21	SWITCH, KEYBOARD (SURROUND)				
S616	1-762-875-21	SWITCH, KEYBOARD (EQ BAND) (GT22/GT44)				
S616	1-762-875-21	SWITCH, KEYBOARD (PLAY MODE/TUNING MODE) (GT55)				
S621	1-762-875-21	SWITCH, KEYBOARD (ENTER)				
S622	1-762-875-21	SWITCH, KEYBOARD (RETURN)				
S623	1-762-875-21	SWITCH, KEYBOARD (▶▶, FOLDER+)				
S624	1-762-875-21	SWITCH, KEYBOARD (▶▶I, TUNING+)				
S625	1-762-875-21	SWITCH, KEYBOARD (▶, ❚❚)				
S626	1-762-875-21	SWITCH, KEYBOARD (I◀◀, TUNING–)				
S627	1-762-875-21	SWITCH, KEYBOARD (◀◀, FOLDER–)				
**********						
	1-687-132-12	SENSOR BOARD				
		**********				
IC731	6-600-564-01	IC RPI-579N1				
		< CONNECTOR >				
CN731	1-785-329-21	PIN, CONNECTOR (LIGHT ANGLE) 3P				
**********						
		SUB WOOFER BOARD (GT44/GT55)				
		**********				
		< CAPACITOR >				
C502	1-162-960-11	CERAMIC CHIP	220PF	10%	50V	
C503	1-162-968-11	CERAMIC CHIP	0.0047uF	10%	50V	
C504	1-104-662-91	ELECT	22uF	20%	25V	
C505	1-162-915-11	CERAMIC CHIP	10PF	0.5PF	50V	
C506	1-104-665-11	ELECT	100uF	20%	25V	
C507	1-126-967-11	ELECT	47uF	20%	50V	
C509	1-128-563-11	ELECT	100uF	20%	100V	
C510	1-128-582-11	ELECT	10uF	20%	100V	
C511	1-128-582-11	ELECT	10uF	20%	100V	
C512	1-136-497-81	FILM	0.1uF	5%	50V	
C513	1-136-497-81	FILM	0.1uF	5%	50V	
C514	1-126-948-11	ELECT	100uF	20%	35V	
C516	1-126-964-11	ELECT	10uF	20%	50V	
C517	1-126-964-11	ELECT	10uF	20%	50V	
		< CONNECTOR >				
CN501	1-815-444-11	PIN, CONNECTOR (PWB) 3P				
CN502	1-819-134-11	PIN, CONNECTOR 6P				
CN503	1-819-132-11	PIN, CONNECTOR 4P				
		< DIODE >				
D501	6-501-176-01	DIODE UDZW-TE17-12B				
D502	8-719-404-50	DIODE MA111-TX				
D503	8-719-404-50	DIODE MA111-TX				
D504	8-719-404-50	DIODE MA111-TX)				
D507	8-719-404-50	DIODE MA111-TX				

Ref. No.	Part No.	Description				Remark
		< IC >				
IC501	6-600-091-01	IC STK404-130S				
		< JUMPER RESISTOR >				
JR501	1-216-864-11	SHORT CHIP	0			
JR502	1-216-864-11	SHORT CHIP	0			
		< TRANSISTOR >				
Q501	6-551-268-01	TRANSISTOR	2SC5625			
Q502	6-551-696-01	TRANSISTOR	ISA1235AC1TP-1EF			
Q503	8-729-620-07	TRANSISTOR	2SC3052EF-T1-LEF			
Q505	8-729-620-07	TRANSISTOR	2SC3052EF-T1-LEF			
Q506	8-729-620-07	TRANSISTOR	2SC3052EF-T1-LEF			
Q507	8-729-620-07	TRANSISTOR	2SC3052EF-T1-LEF			
		< RESISTOR >				
R501	1-216-841-11	METAL CHIP	47K	5%	1/10W	
R502	1-216-841-11	METAL CHIP	47K	5%	1/10W	
R503	1-216-821-11	METAL CHIP	1K	5%	1/10W	
R504	1-216-841-11	METAL CHIP	47K	5%	1/10W	
⚠R505	1-215-896-00	METAL OXIDE	4.7K	5%	2W	F
⚠R506	1-202-972-61	FUSIBLE	1	5%	1/4W	F
⚠R507	1-215-873-00	METAL OXIDE	4.7K	5%	1W	F
⚠R508	1-215-873-00	METAL OXIDE	4.7K	5%	1W	F
⚠R509	1-212-881-11	FUSIBLE	100	5%	1/4W	F
⚠R510	1-220-893-11	METAL	0.22	10%	5W	F
⚠R511	1-220-893-11	METAL	0.22	10%	5W	F
R512	1-216-797-11	METAL CHIP	10	5%	1/10W	
R513	1-216-821-11	METAL CHIP	1K	5%	1/10W	
R514	1-216-837-11	METAL CHIP	22K	5%	1/10W	
R515	1-216-841-11	METAL CHIP	47K	5%	1/10W	
R516	1-216-809-11	METAL CHIP	100	5%	1/10W	
R517	1-216-833-11	METAL CHIP	10K	5%	1/10W	
R518	1-216-833-11	METAL CHIP	10K	5%	1/10W	
R520	1-216-845-11	METAL CHIP	100K	5%	1/10W	
R521	1-216-809-11	METAL CHIP	100	5%	1/10W	
R522	1-216-809-11	METAL CHIP	100	5%	1/10W	
R523	1-216-809-11	METAL CHIP	100	5%	1/10W	
R524	1-216-841-11	METAL CHIP	47K	5%	1/10W	
R525	1-216-797-11	METAL CHIP	10	5%	1/10W	
R526	1-216-797-11	METAL CHIP	10	5%	1/10W	
R527	1-216-797-11	METAL CHIP	10	5%	1/10W	
R529	1-216-825-11	METAL CHIP	2.2K	5%	1/10W	
R530	1-216-837-11	METAL CHIP	22K	5%	1/10W	
R531	1-216-829-11	METAL CHIP	4.7K	5%	1/10W	
R532	1-216-837-11	METAL CHIP	22K	5%	1/10W	
R533	1-216-837-11	METAL CHIP	22K	5%	1/10W	
⚠R534	1-202-972-61	FUSIBLE	1	5%	1/4W	F
		< RELAY >				
RY501	1-755-307-11	RELAY				
**********						

SW SW-SP TC

Ref. No.	Part No.	Description			Remark
	1-687-669-12	SW BOARD			
		*********			
S751	1-786-514-11	SWITCH, LEVER (SLIDE)			
**********					
		SW-SP BOARD (GT44/GT55)			
		**********			
		< TERMINAL BOARD >			
JK501	1-780-242-11	TERMINAL BOARD, PUSH (ANTENNA) 2P (SUB WOOFER OUT)			
**********					
		TC BOARD			
		*********			
		< CAPACITOR >			
C301	1-162-964-11	CERAMIC CHIP	0.001uF	10%	50V
C302	1-162-964-11	CERAMIC CHIP	0.001uF	10%	50V
C303	1-162-964-11	CERAMIC CHIP	0.001uF	10%	50V
C304	1-162-964-11	CERAMIC CHIP	0.001uF	10%	50V
C315	1-162-923-11	CERAMIC CHIP	47PF	5%	50V
C316	1-162-923-11	CERAMIC CHIP	47PF	5%	50V
C317	1-126-965-11	ELECT	22uF	20%	50V
C318	1-126-965-11	ELECT	22uF	20%	50V
C323	1-162-969-11	CERAMIC CHIP	0.0068uF	10%	25V
C324	1-162-969-11	CERAMIC CHIP	0.0068uF	10%	25V
C327	1-162-960-11	CERAMIC CHIP	220PF	10%	50V
C328	1-162-960-11	CERAMIC CHIP	220PF	10%	50V
C329	1-131-688-31	FILM	0.047uF	5%	50V
C330	1-131-688-31	FILM	0.047uF	5%	50V
C350	1-126-934-11	ELECT	220uF	20%	16V
C351	1-126-923-91	ELECT	220uF	20%	10V
C352	1-107-826-11	CERAMIC CHIP	0.1uF	10%	16V
C353	1-107-826-11	CERAMIC CHIP	0.1uF	10%	16V
C354	1-164-156-11	CERAMIC CHIP	0.1uF		25V
C355	1-162-970-11	CERAMIC CHIP	0.01uF	10%	25V
C356	1-126-964-11	ELECT	10uF	20%	50V
C401	1-126-956-11	ELECT	0.1uF	20%	50V
C402	1-126-956-11	ELECT	0.1uF	20%	50V
C403	1-162-923-11	CERAMIC CHIP	47PF	5%	50V
C404	1-162-923-11	CERAMIC CHIP	47PF	5%	50V
C405	1-162-960-11	CERAMIC CHIP	220PF	10%	50V
C406	1-162-960-11	CERAMIC CHIP	220PF	10%	50V
C409	1-126-964-11	ELECT	10uF	20%	50V
C410	1-126-964-11	ELECT	10uF	20%	50V
C411	1-162-915-11	CERAMIC CHIP	10PF	0.5PF	50V
C412	1-162-915-11	CERAMIC CHIP	10PF	0.5PF	50V
C413	1-162-960-11	CERAMIC CHIP	220PF	10%	50V
C414	1-162-960-11	CERAMIC CHIP	220PF	10%	50V
C416	1-162-968-11	CERAMIC CHIP	0.0047uF	10%	50V
C417	1-162-970-11	CERAMIC CHIP	0.01uF	10%	25V
C418	1-162-970-11	CERAMIC CHIP	0.01uF	10%	25V
C430	1-164-156-11	CERAMIC CHIP	0.1uF		25V
C433	1-162-970-11	CERAMIC CHIP	0.01uF	10%	25V
C452	1-126-947-11	ELECT	47uF	20%	35V
C453	1-130-471-00	MYLAR	0.001uF	5%	50V
C454	1-130-481-00	MYLAR	0.0068uF	5%	50V
C456	1-130-483-00	MYLAR	0.01uF	5%	50V
C461	1-164-315-11	CERAMIC CHIP	470PF	5%	50V
C462	1-164-315-11	CERAMIC CHIP	470PF	5%	50V
C466	1-162-968-11	CERAMIC CHIP	0.0047uF	10%	50V
		< CONNECTOR >			
CN008	1-568-830-11	CONNECTOR, FFC 11P			
CN301	1-815-444-11	PIN, CONNECTOR (PWB) 3P			
CN302	1-815-449-11	PIN, CONNECTOR (PWB) 8P			
		< DIODE >			
D301	6-501-165-01	DIODE UDZW-TE17-4.3B			
D401	6-500-335-01	DIODE MC2838-T112-1			
		< IC >			
IC301	6-702-945-01	IC NJM14558V-TE2			
IC401	8-759-278-58	IC NJM4558V-TE2			
		< JUMPER RESISTOR >			
JR301	1-216-864-11	SHORT CHIP	0		
JR302	1-216-864-11	SHORT CHIP	0		
JR303	1-216-864-11	SHORT CHIP	0		
JR304	1-216-864-11	SHORT CHIP	0		
JR305	1-216-864-11	SHORT CHIP	0		
JR306	1-216-864-11	SHORT CHIP	0		
JR307	1-216-864-11	SHORT CHIP	0		
JR308	1-216-864-11	SHORT CHIP	0		
JR309	1-216-864-11	SHORT CHIP	0		
JR310	1-216-864-11	SHORT CHIP	0		
JR311	1-216-864-11	SHORT CHIP	0		
JR313	1-216-864-11	SHORT CHIP	0		
JR315	1-216-864-11	SHORT CHIP	0		
JR316	1-216-864-11	SHORT CHIP	0		
JR317	1-216-864-11	SHORT CHIP	0		
JR318	1-216-864-11	SHORT CHIP	0		
JR319	1-216-864-11	SHORT CHIP	0		
JR320	1-216-864-11	SHORT CHIP	0		
		< TRANSISTOR >			
Q301	6-551-597-01	FET	2SJ461-T		
Q302	6-551-597-01	FET	2SJ461-T		
Q303	8-729-045-62	FET	2SK2158-T2B		
Q304	8-729-045-62	FET	2SK2158-T2B		
Q305	6-551-696-01	TRANSISTOR	ISA1235AC1TP-1EF		
Q306	6-551-696-01	TRANSISTOR	ISA1235AC1TP-1EF		
Q401	8-729-620-07	TRANSISTOR	2SC3052EF-T1-LEF		
Q402	8-729-620-07	TRANSISTOR	2SC3052EF-T1-LEF		
Q403	8-729-620-07	TRANSISTOR	2SC3052EF-T1-LEF		
Q404	8-729-620-07	TRANSISTOR	2SC3052EF-T1-LEF		
Q405	6-551-696-01	TRANSISTOR	ISA1235AC1TP-1EF		
Q406	6-551-696-01	TRANSISTOR	ISA1235AC1TP-1EF		
Q407	6-551-696-01	TRANSISTOR	ISA1235AC1TP-1EF		
Q408	8-729-620-07	TRANSISTOR	2SC3052EF-T1-LEF		
Q409	8-729-027-43	TRANSISTOR	DTC114EKA-T146		
Q410	6-551-276-01	TRANSISTOR	RT1N431C-TP-1		
Q453	8-729-036-86	TRANSISTOR	KTC3203Y-AT		
Q454	8-729-620-07	TRANSISTOR	2SC3052EF-T1-LEF		
Q455	8-729-037-13	TRANSISTOR	KTA1271Y		

TC TRANS

Ref. No.	Part No.	Description			Remark
		< RESISTOR >			
R301	1-216-841-11	METAL CHIP	47K	5%	1/10W
R302	1-216-841-11	METAL CHIP	47K	5%	1/10W
R303	1-216-841-11	METAL CHIP	47K	5%	1/10W
R304	1-216-841-11	METAL CHIP	47K	5%	1/10W
R305	1-216-849-11	METAL CHIP	220K	5%	1/10W
R306	1-216-849-11	METAL CHIP	220K	5%	1/10W
R307	1-216-829-11	METAL CHIP	4.7K	5%	1/10W
R308	1-216-829-11	METAL CHIP	4.7K	5%	1/10W
R309	1-216-817-11	METAL CHIP	470	5%	1/10W
R310	1-216-817-11	METAL CHIP	470	5%	1/10W
R311	1-216-813-11	METAL CHIP	220	5%	1/10W
R312	1-216-813-11	METAL CHIP	220	5%	1/10W
R313	1-216-805-11	METAL CHIP	47	5%	1/10W
R314	1-216-805-11	METAL CHIP	47	5%	1/10W
R315	1-216-809-11	METAL CHIP	100	5%	1/10W
R316	1-216-809-11	METAL CHIP	100	5%	1/10W
R317	1-216-853-11	METAL CHIP	470K	5%	1/10W
R318	1-216-853-11	METAL CHIP	470K	5%	1/10W
R319	1-216-837-11	METAL CHIP	22K	5%	1/10W
R320	1-216-837-11	METAL CHIP	22K	5%	1/10W
R321	1-216-809-11	METAL CHIP	100	5%	1/10W
R322	1-216-809-11	METAL CHIP	100	5%	1/10W
R323	1-216-829-11	METAL CHIP	4.7K	5%	1/10W
R324	1-216-829-11	METAL CHIP	4.7K	5%	1/10W
R325	1-216-809-11	METAL CHIP	100	5%	1/10W
R326	1-216-809-11	METAL CHIP	100	5%	1/10W
R349	1-216-809-11	METAL CHIP	100	5%	1/10W
R350	1-216-864-11	SHORT CHIP	0		
R351	1-216-821-11	METAL CHIP	1K	5%	1/10W
R401	1-216-841-11	METAL CHIP	47K	5%	1/10W
R402	1-216-841-11	METAL CHIP	47K	5%	1/10W
R403	1-216-841-11	METAL CHIP	47K	5%	1/10W
R404	1-216-841-11	METAL CHIP	47K	5%	1/10W
R405	1-216-841-11	METAL CHIP	47K	5%	1/10W
R406	1-216-841-11	METAL CHIP	47K	5%	1/10W
R407	1-218-867-11	METAL CHIP	6.8K	0.5%	1/10W
R408	1-218-867-11	METAL CHIP	6.8K	0.5%	1/10W
R411	1-216-853-11	METAL CHIP	470K	5%	1/10W
R412	1-216-853-11	METAL CHIP	470K	5%	1/10W
R413	1-216-849-11	METAL CHIP	220K	5%	1/10W
R414	1-216-849-11	METAL CHIP	220K	5%	1/10W
R423	1-216-847-11	METAL CHIP	150K	5%	1/10W
R424	1-216-847-11	METAL CHIP	150K	5%	1/10W
R427	1-216-797-11	METAL CHIP	10	5%	1/10W
R428	1-216-797-11	METAL CHIP	10	5%	1/10W
R429	1-216-833-11	METAL CHIP	10K	5%	1/10W
R430	1-216-833-11	METAL CHIP	10K	5%	1/10W
R431	1-216-821-11	METAL CHIP	1K	5%	1/10W
R432	1-216-821-11	METAL CHIP	1K	5%	1/10W
R433	1-216-841-11	METAL CHIP	47K	5%	1/10W
R434	1-216-841-11	METAL CHIP	47K	5%	1/10W
R435	1-216-833-11	METAL CHIP	10K	5%	1/10W
R436	1-216-833-11	METAL CHIP	10K	5%	1/10W
R437	1-216-825-11	METAL CHIP	2.2K	5%	1/10W
R438	1-216-825-11	METAL CHIP	2.2K	5%	1/10W
R440	1-216-833-11	METAL CHIP	10K	5%	1/10W
R441	1-216-864-11	SHORT CHIP	0		
R442	1-216-841-11	METAL CHIP	47K	5%	1/10W
R443	1-216-845-11	METAL CHIP	100K	5%	1/10W
R444	1-216-833-11	METAL CHIP	10K	5%	1/10W
R449	1-216-801-11	METAL CHIP	22	5%	1/10W
R450	1-216-801-11	METAL CHIP	22	5%	1/10W
R451	1-216-833-11	METAL CHIP	10K	5%	1/10W
R452	1-216-841-11	METAL CHIP	47K	5%	1/10W
R453	1-216-829-11	METAL CHIP	4.7K	5%	1/10W
R454	1-216-829-11	METAL CHIP	4.7K	5%	1/10W
R455	1-216-797-11	METAL CHIP	10	5%	1/10W
R456	1-216-801-11	METAL CHIP	22	5%	1/10W
R457	1-216-837-11	METAL CHIP	22K	5%	1/10W
R458	1-216-793-11	METAL CHIP	4.7	5%	1/10W
R459	1-216-864-11	SHORT CHIP	0		
R461	1-216-825-11	METAL CHIP	2.2K	5%	1/10W
R462	1-216-825-11	METAL CHIP	2.2K	5%	1/10W
R463	1-216-821-11	METAL CHIP	1K	5%	1/10W
R464	1-216-821-11	METAL CHIP	1K	5%	1/10W
R481	1-216-833-11	METAL CHIP	10K	5%	1/10W
R482	1-216-841-11	METAL CHIP	47K	5%	1/10W
R483	1-216-864-11	SHORT CHIP	0		
R484	1-216-825-11	METAL CHIP	2.2K	5%	1/10W
R486	1-216-864-11	SHORT CHIP	0		
R487	1-216-864-11	SHORT CHIP	0		
		< TRANSFORMER >			
T001	1-443-760-11	TRANSFORMER, BIAS OSCILLATION			

****

TRANS BOARD
****

		< CAPACITOR >			
C907	1-130-495-00	MYLAR	0.1uF	5%	50V
C908	1-128-553-11	ELECT	220uF	20%	63V
C909	1-126-964-11	ELECT	10uF	20%	50V
C910	1-126-968-11	ELECT	100uF	20%	50V
C911	1-126-942-61	ELECT	1000uF	20%	25V
C914	1-126-962-11	ELECT	3.3uF	20%	50V
		< CONNECTOR >			
* CN901	1-793-660-11	PIN, CONNECTOR (PC BOARD) 3P			
CN903	1-819-131-11	PIN, CONNECTOR 3P (GT44)			
CN903	1-819-133-11	PIN, CONNECTOR (GT22/GT55)			
CN907	1-819-139-11	PIN, CONNECTOR 11P			
		< DIODE >			
D901	8-719-404-50	DIODE MA111-TX			
D902	6-500-522-21	DIODE 10EDB40-TB3			
D903	6-500-522-21	DIODE 10EDB40-TB3			
D904	6-500-522-21	DIODE 10EDB40-TB3			
D905	6-500-522-21	DIODE 10EDB40-TB3			
D906	8-719-083-71	DIODE UDZSTE-1730B			
D908	6-500-522-21	DIODE 10EDB40-TB3			
D910	6-500-335-01	DIODE MC2838-T112-1			

Ref. No.	Part No.	Description			Remark
		< FUSE HOLDER >			
FH907	1-533-217-41	HOLDER, FUSE			
FH908	1-533-217-41	HOLDER, FUSE			
FH909	1-533-217-41	HOLDER, FUSE			
FH910	1-533-217-41	HOLDER, FUSE			
FH911	1-533-217-41	HOLDER, FUSE (GT22/GT55)			
FH912	1-533-217-41	HOLDER, FUSE (GT22/GT55)			
FH913	1-533-217-41	HOLDER, FUSE			
FH914	1-533-217-41	HOLDER, FUSE			
FH915	1-533-217-41	HOLDER, FUSE (GT22/GT55)			
FH916	1-533-217-41	HOLDER, FUSE (GT22/GT55)			
FH917	1-533-217-41	HOLDER, FUSE			
FH918	1-533-217-41	HOLDER, FUSE			
		< TRANSFORMER >			
⚠PT902	1-443-927-11	TRANSFORMER, POWER (GT22: MX/GT44: MX/GT55: MX)			
⚠PT902	1-443-928-11	TRANSFORMER, POWER (GT22: E2, E3, E13, E51, AR, AUS/GT44: E2, E3, E13, E51, AR, AUS/GT55: E2, E51, AR)			
		< TRANSISTOR >			
Q902	8-729-048-66	TRANSISTOR	2SB1238-PQR-TV2		
Q903	8-729-620-07	TRANSISTOR	2SC3052EF-T1-LEF		
		< RESISTOR >			
R903	1-216-833-11	METAL CHIP	10K	5%	1/10W
R904	1-216-821-11	METAL CHIP	1K	5%	1/10W
⚠R908	1-202-972-61	FUSIBLE	1	5%	1/4W F
R910	1-216-801-11	METAL CHIP	22	5%	1/10W
R911	1-216-864-11	SHORT CHIP	0		
R912	1-216-837-11	METAL CHIP	22K	5%	1/10W
R913	1-216-841-11	METAL CHIP	47K	5%	1/10W
R914	1-216-834-11	METAL CHIP	12K	5%	1/10W
R915	1-216-829-11	METAL CHIP	4.7K	5%	1/10W
		< RELAY >			
⚠RY901	1-755-334-11	RELAY, AC POWER			
		< SWITCH >			
⚠S901	1-786-055-31	SELECTOR, VOLTAGE (VOLTAGE SELECTOR) (GT22: E2, E3, E13, E51/GT44: E2, E3, E13, E51/ GT55: E2, E51)			

****

USB BOARD
****

Ref. No.	Part No.	Description			Remark
		< CAPACITOR >			
C901	1-107-826-11	CERAMIC CHIP	0.1uF	10%	16V
C902	1-124-779-00	ELECT CHIP	10uF	20%	16V
C903	1-124-779-00	ELECT CHIP	10uF	20%	16V
C904	1-124-779-00	ELECT CHIP	10uF	20%	16V
C905	1-107-826-11	CERAMIC CHIP	0.1uF	10%	16V
C906	1-107-826-11	CERAMIC CHIP	0.1uF	10%	16V
C907	1-107-826-11	CERAMIC CHIP	0.1uF	10%	16V
C908	1-107-826-11	CERAMIC CHIP	0.1uF	10%	16V
C909	1-162-919-11	CERAMIC CHIP	22PF	5%	50V
C910	1-162-919-11	CERAMIC CHIP	22PF	5%	50V
C912	1-162-915-11	CERAMIC CHIP	10PF	0.5PF	50V
C913	1-107-826-11	CERAMIC CHIP	0.1uF	10%	16V
C914	1-107-826-11	CERAMIC CHIP	0.1uF	10%	16V
C915	1-107-826-11	CERAMIC CHIP	0.1uF	10%	16V
C916	1-107-826-11	CERAMIC CHIP	0.1uF	10%	16V
C917	1-100-354-21	ELECT CHIP	220uF	20%	6.3V
C919	1-164-360-11	CERAMIC CHIP	0.1uF		16V
C920	1-164-360-11	CERAMIC CHIP	0.1uF		16V
C921	1-107-826-11	CERAMIC CHIP	0.1uF	10%	16V
C922	1-107-826-11	CERAMIC CHIP	0.1uF	10%	16V
C930	1-216-864-11	SHORT CHIP	0		
		< CONNECTOR >			
CN901	1-770-160-21	PIN, CONNECTOR (PC BOARD) 2P			
CN903	1-779-993-11	PIN, CONNECTOR (PWB) 5P			
CN904	1-784-859-51	CONNECTOR, FFC (LIF (NON-ZIF)) 7P			
CN907	1-784-833-51	CONNECTOR, FFC (LIF (NON-ZIF)) 21P			
		< DIODE >			
D901	6-501-579-01	DIODE MC2837			
D902	6-501-579-01	DIODE MC2837			
		< FERRITE BEAD >			
FB901	1-469-152-11	FERRITE, EMI (SMD) (2012)			
FB902	1-469-152-11	FERRITE, EMI (SMD) (2012)			
		< IC >			
IC901	6-807-284-01	IC TMP92CD28AFG-2CB4			
IC915	6-710-887-01	IC R5523N001B-TR-F			
IC921	6-704-832-01	IC IS61LV6416-10TLT			
		< JUMPER RESISTOR >			
JR902	1-216-295-00	SHORT CHIP	0		
		< RESISTOR >			
R901	1-216-833-11	METAL CHIP	10K	5%	1/10W
R902	1-216-829-11	METAL CHIP	4.7K	5%	1/10W
R903	1-216-829-11	METAL CHIP	4.7K	5%	1/10W
R904	1-216-829-11	METAL CHIP	4.7K	5%	1/10W
R905	1-216-829-11	METAL CHIP	4.7K	5%	1/10W
R906	1-216-829-11	METAL CHIP	4.7K	5%	1/10W
R907	1-216-829-11	METAL CHIP	4.7K	5%	1/10W
R913	1-216-845-11	METAL CHIP	100K	5%	1/10W
R915	1-216-833-11	METAL CHIP	10K	5%	1/10W
R916	1-216-864-11	SHORT CHIP	0		
R917	1-216-864-11	SHORT CHIP	0		
R919	1-216-809-11	METAL CHIP	100	5%	1/10W
R920	1-216-833-11	METAL CHIP	10K	5%	1/10W
R921	1-216-845-11	METAL CHIP	100K	5%	1/10W
R922	1-216-845-11	METAL CHIP	100K	5%	1/10W
R923	1-216-802-11	METAL CHIP	27	5%	1/10W
R924	1-216-802-11	METAL CHIP	27	5%	1/10W
R925	1-216-835-11	METAL CHIP	15K	5%	1/10W
R926	1-216-835-11	METAL CHIP	15K	5%	1/10W
R928	1-216-864-11	SHORT CHIP	0		

USB VOLUME

Ref. No.	Part No.	Description			Remark
R932	1-216-809-11	METAL CHIP	100	5%	1/10W
R933	1-216-864-11	SHORT CHIP	0		
R934	1-216-833-11	METAL CHIP	10K	5%	1/10W
R937	1-216-809-11	METAL CHIP	100	5%	1/10W
R938	1-216-809-11	METAL CHIP	100	5%	1/10W
R941	1-216-845-11	METAL CHIP	100K	5%	1/10W
R942	1-216-845-11	METAL CHIP	100K	5%	1/10W
R943	1-216-845-11	METAL CHIP	100K	5%	1/10W
R944	1-216-845-11	METAL CHIP	100K	5%	1/10W
R945	1-216-829-11	METAL CHIP	4.7K	5%	1/10W
R947	1-216-829-11	METAL CHIP	4.7K	5%	1/10W
R950	1-216-829-11	METAL CHIP	4.7K	5%	1/10W
R970	1-216-809-11	METAL CHIP	100	5%	1/10W
R971	1-216-809-11	METAL CHIP	100	5%	1/10W
R972	1-216-809-11	METAL CHIP	100	5%	1/10W
R973	1-216-809-11	METAL CHIP	100	5%	1/10W
R974	1-216-809-11	METAL CHIP	100	5%	1/10W
R975	1-216-809-11	METAL CHIP	100	5%	1/10W
R976	1-216-809-11	METAL CHIP	100	5%	1/10W
R977	1-216-809-11	METAL CHIP	100	5%	1/10W
R978	1-216-809-11	METAL CHIP	100	5%	1/10W
R979	1-216-809-11	METAL CHIP	100	5%	1/10W
R981	1-216-809-11	METAL CHIP	100	5%	1/10W
R982	1-216-809-11	METAL CHIP	100	5%	1/10W
R983	1-216-809-11	METAL CHIP	100	5%	1/10W
R984	1-216-809-11	METAL CHIP	100	5%	1/10W
R985	1-216-809-11	METAL CHIP	100	5%	1/10W
R986	1-216-809-11	METAL CHIP	100	5%	1/10W
		< COMPOSITION CIRCUIT BLOCK >			
RB921	1-234-944-21	RES, NETWORK	47 (1005X4)		
RB922	1-234-944-21	RES, NETWORK	47 (1005X4)		
RB923	1-234-944-21	RES, NETWORK	47 (1005X4)		
RB924	1-234-944-21	RES, NETWORK	47 (1005X4)		
		< VIBRATOR >			
X901	1-813-931-21	VIBRATOR, CRYSTAL (9MHz)			

****

VOLUME BOARD
****

		< CAPACITOR >			
C651	1-162-970-11	CERAMIC CHIP	0.01uF	10%	25V
C652	1-162-970-11	CERAMIC CHIP	0.01uF	10%	25V
C653	1-162-970-11	CERAMIC CHIP	0.01uF	10%	25V
C654	1-162-970-11	CERAMIC CHIP	0.01uF	10%	25V
		< RESISTOR >			
R761	1-216-837-11	METAL CHIP	22K	5%	1/10W
R762	1-216-837-11	METAL CHIP	22K	5%	1/10W
R763	1-216-837-11	METAL CHIP	22K	5%	1/10W
R764	1-216-837-11	METAL CHIP	22K	5%	1/10W
R765	1-216-845-11	METAL CHIP	100K	5%	1/10W
R766	1-216-841-11	METAL CHIP	47K	5%	1/10W
R767	1-216-845-11	METAL CHIP	100K	5%	1/10W
R768	1-216-841-11	METAL CHIP	47K	5%	1/10W

Ref. No.	Part No.	Description	Remark
		< ROTARY ENCODER >	
S651	1-480-109-11	ENCODER, ROTARY (MASTER VOLUME)	
S652	1-480-107-11	ENCODER, ROTARY (OPERATION DIAL)	

****

MISCELLANEOUS
****

8	1-500-868-11	CORE, FERRITE	
9	1-832-647-21	CABLE, FLEXIBLE FLAT (27 CORE)	
101	1-417-656-22	MECHA DECK (CWN42FF609)	
102	1-832-826-21	CABLE, FLEXIBLE FLAT (11 CORE)	
158	1-832-907-21	CABLE, FLEXIBLE FLAT (27 CORE)	
160	1-834-336-21	CABLE, FLEXIBLE FLAT (13 CORE)	
253	1-693-727-21	TUNER (FM/AM)	
254	1-834-335-21	CABLE, FLEXIBLE FLAT (9 CORE)	
255	1-831-785-21	CABLE, FLEXIBLE FLAT (13 CORE)	
256	1-832-617-21	CABLE, FLEXIBLE FLAT (21 CORE)	
351	1-832-824-21	CABLE, FLEXIBLE FLAT (11 CORE)	
⚠354	1-775-790-71	CORD, POWER (GT22: AUS/GT44: AUS)	
⚠354	1-829-387-11	CORD, POWER (GT22: AR/GT44: AR/GT55: AR)	
⚠354	1-829-627-11	POWER-SUPPLY CORD	(GT22: MX/GT44: MX/GT55: MX)
⚠354	1-830-188-21	CORD, POWER (GT22: E2, E3, E13, E51/GT44:	E2, E3, E13, E51/GT55: E2, E51)
357	1-500-868-11	CORE, FERRITE	
502	1-828-938-51	WIRE (FLAT TYPE) (5 CORE)	
576	1-834-268-21	WIRE (FLAT TYPE) (16 CORE)	
⚠579	A-4735-357-A	OPTICAL PICK-UP BLOCK (KSM-213D)	
580	1-471-035-21	MAGNET	
⚠F904	1-532-506-33	FUSE (T6/3AL/250V) (GT22/GT55)	
⚠F904	1-533-949-33	FUSE, CYLINDRICAL (TIME LAG) (T8AL/250V)	(GT44)
⚠F905	1-532-506-33	FUSE (T6.3AL/250V) (GT22/GT55)	
⚠F906	1-532-465-33	FUSE (T3.15AL/250V)	
⚠F907	1-532-465-33	FUSE (T3.15AL/250V)	
⚠F908	1-533-949-33	FUSE, CYLINDRICAL (TIME LAG) (T8AL/250V)	(GT22/GT55)
⚠F909	1-533-949-33	FUSE, CYLINDRICAL (TIME LAG) (T8AL/250V)	
M001	1-787-631-11	FAN, DC	
M741	A-1108-965-A	MOTOR ASSY, TABLE	
M751	A-1108-966-A	MOTOR ASSY, LOADING	
⚠PT901	1-445-144-11	TRANSFORMER, POWER (GT44: MX)	
⚠PT901	1-445-147-11	TRANSFORMER, POWER (GT22: MX/GT55: MX)	
⚠PT901	1-445-216-11	TRANSFORMER, POWER	(GT44: E2, E3, E13, E51, AR, AUS)
⚠PT901	1-445-219-11	TRANSFORMER, POWER (GT22: E2, E3, E13,	E51, AR, AUS/GT55: E2, E51, AR)
S201	1-771-853-11	SWITCH, DETECTION (LIMIT)	
S711	1-477-680-12	ENCODER, ROTARY	(DISC, TABLE, ADDRESS, DETECT)

****

ACCESSORIES
****

⚠	1-569-008-22	ADAPTOR, CONVERSION 2P	(GT22: E2, E3, E51/GT44: E2, E3, E51/ GT55: E2, E51, AR)

MEMO

REVISION HISTORY

Clicking the version allows you to jump to the revised page.
Also, clicking the version at the upper right on the revised page allows you to jump to the next revised page.

Ver.	Date	Description of Revision
1.0	2007.06	New