CIRCUIT DIAGRAM FOR PF2168/FS2198

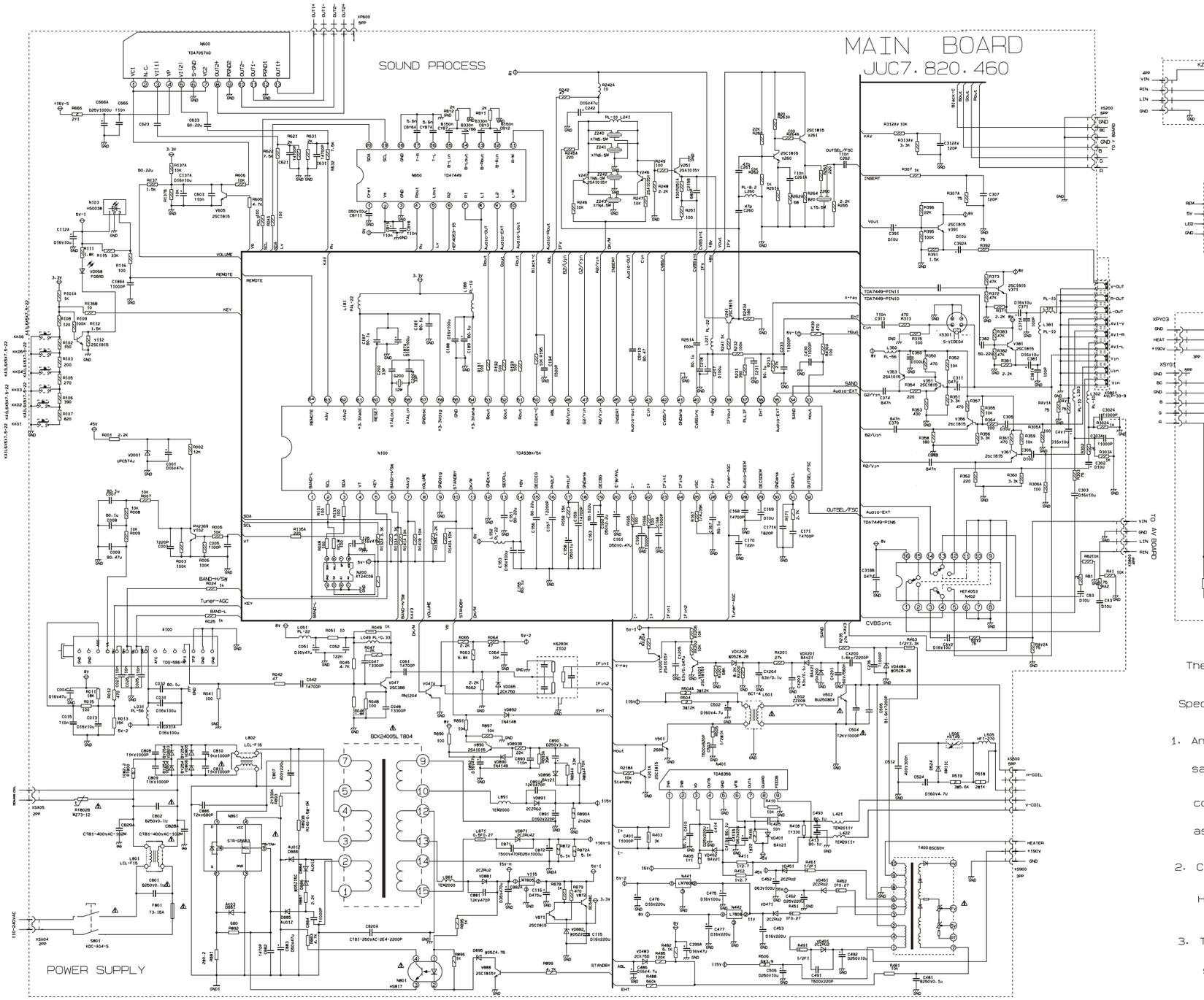

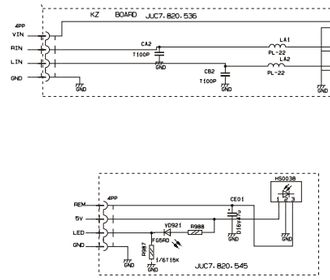

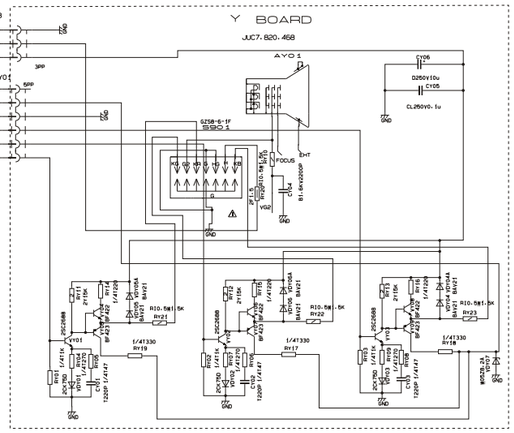

The circuit diagram is only for reference

Specifications are subject to change without notice

1. Any components identified by ⚠ have special safety-related characteristics.Use replacement components which have the same characteristics as the original parts.

2. Cold ground ⏚

   Hot ground ⊥

3. The component in shadows has special safety performance . Replace it with the same specifications as the original's