HCD-RG190/RG290

SERVICE MANUAL

Ver. 1.3 2008.09

AEP Model
E Model
Australian Model
HCD-RG190/RG290
UK Model
Mexican Model
HCD-RG290

Photo: HCD-RG290

- HCD-RG190 is the amplifier, CD player, tape deck and tuner section in MHC-RG190.
- HCD-RG290 is the amplifier, CD player, tape deck and tuner section in MHC-RG290.

CD Section	Model Name Using Similar Mechanism	HCD-RG490/RG590
	CD Mechanism Type	CDM74KF-K6BD83S (Except Mexican model)/ CDM74KF-F1BD84 (Mexican model)
	Base Unit Name	BU-K6BD83S-WOD (Except Mexican model)/ BU-F1BD84 (Mexican model)
	Optical Pick-up Block Name	KSM-213DHAP (Except Mexican model)/ KSM-215DCP (Mexican model)
TAPE Section	Model Name Using Similar Mechanism	HCD-RG490/RG590
	Tape Transport Mechanism Type	CWN42FF609

SPECIFICATIONS

Amplifier Section

HCD-RG290

The following are measured at AC 120, 127, 220, 240 V 50/60 Hz

DIN power output (rated): 95 + 95 watts (6 ohms at 1 kHz, DIN)

Continuous RMS power output (reference): 125 + 125 watts (6 ohms at 1 kHz, 10% THD)

HCD-RG190

The following are measured at AC 120, 127, 220, 240 V 50/60 Hz

DIN power output (rated): 50 + 50 watts (6 ohms at 1 kHz, DIN)

Continuous RMS power output (reference): 65 + 65 watts (6 ohms at 1 kHz, 10% THD)

Inputs:

AUDIO IN (stereo mini jack): voltage 250 mV, impedance 47 kilohms

MIC (phone jack) (Latin American model only): sensitivity 1 mV, impedance 10 kilohms

Outputs:

PHONES (stereo mini jack): accepts headphones of 8 ohms or more

VIDEO OUT (phono jack) (Mexican model only): max. output level 1Vpp, unbalanced, Sync negative, load impedance 75 ohms

SPEAKER: accepts impedance of 6 to 16 ohms

CD player section

System: Compact disc and digital audio system

Laser Diode Properties

Emission duration: continuous Laser

Output*: Less than 44.6µW

*This output is the value measurement at a distance of 200mm from the objective lens surface on the Optical Pick-up Block with 7mm aperture.

Frequency response: 20 Hz – 20 kHz

Signal-to-noise ratio: More than 90 dB

Dynamic range: More than 90 dB

Tape deck section

Recording system: 4-track 2-channel, stereo

Frequency response: 50 – 13,000 Hz (±3 dB), using Sony TYPE I cassettes

Tuner section

FM stereo, FM/AM superheterodyne tuner

FM tuner section:

Tuning range

87.5 – 108.0 MHz (50 kHz step)

Antenna: FM lead antenna

Antenna terminals: 75 ohms unbalanced

Intermediate frequency: 10.7 MHz

AM tuner section:

Tuning range

Pan-American model:

530 – 1,710 kHz (with 10 kHz tuning interval)

531 – 1,710 kHz (with 9 kHz tuning interval)

– Continued on next page –

COMPACT DISC DECK RECEIVER

9-887-145-04
2008I05-1
© 2008.09

Sony Corporation
Audio&Video Business Group
Published by Sony Techno Create Corporation

SONY®

European, Russian and Saudi Arabian models:
531 – 1,602 kHz (with 9 kHz tuning interval)
Other models:
530 – 1,710 kHz (with 10 kHz tuning interval)
531 – 1,602 kHz (with 9 kHz tuning interval)
Antenna: AM loop antenna, external antenna terminal
Intermediate frequency: 450 kHz

General

Power requirements
- European and Russian models: AC 230 V, 50/60 Hz
- Australian model: AC 230 – 240V, 50/60 Hz
- Mexican model: AC 127V, 60 Hz
- Argentine model: AC 220V, 50/60 Hz
- Saudi Arabian model: AC 120 – 127, 220 or 230 – 240 V, 50/60 Hz, Adjustable with voltage selector
- Other models: AC 120, 220 or 230 – 240 V, 50/60 Hz, Adjustable with voltage selector

Power consumption
- European and Russian models:
- HCD-RG290: 185 watts
- HCD-RG190: 100 watts
- Other models:
- HCD-RG290: 200 watts
- HCD-RG190: 110 watts

Dimensions (w/h/d) (excl. speakers): Approx. 280 × 328 × 412.3 mm

Mass (excl. speakers)
- HCD-RG290: Approx. 9.3 kg
- HCD-RG190: Approx. 7.5 kg

Design and specifications are subject to change without notice.

Notes on chip component replacement
- Never reuse a disconnected chip component.
- Notice that the minus side of a tantalum capacitor may be damaged by heat.

Flexible Circuit Board Repairing
- Keep the temperature of the soldering iron around 270 ˚C during repairing.
- Do not touch the soldering iron on the same conductor of the circuit board (within 3 times).
- Be careful not to apply force on the conductor when soldering or unsoldering.

CAUTION
Use of controls or adjustments or performance of procedures other than those specified herein may result in hazardous radiation exposure.

This appliance is classified as a CLASS 1 LASER product. This marking is located on the rear exterior.

SAFETY-RELATED COMPONENT WARNING!!

COMPONENTS IDENTIFIED BY MARK ⚠ OR DOTTED LINE WITH MARK ⚠ ON THE SCHEMATIC DIAGRAMS AND IN THE PARTS LIST ARE CRITICAL TO SAFE OPERATION. REPLACE THESE COMPONENTS WITH SONY PARTS WHOSE PART NUMBERS APPEAR AS SHOWN IN THIS MANUAL OR IN SUPPLEMENTS PUBLISHED BY SONY.

TABLE OF CONTENTS

1. SERVICING NOTES 4

2. GENERAL 5

3. DISASSEMBLY
3-1. Disassembly Flow 6
3-2. Case (Side-L), Case (Side-R) 7
3-3. Case (Top) 7
3-4. LID (CD) 8
3-5 CD Mechanism Deck
(CDM74KF-K6BD83S: Except Mexican model)
(CDM74KF-F1BD84: Mexican model) 8
3-6. Front Panel Block 9
3-7. Mecha Deck (CWN42FF609) 9
3-8. Back Panel Section 10
3-9. MAIN Board 10
3-10. BD Board (Mexican model),
CD Board (Except Mexican model) 11
3-11. DRIVE Board, SW Board 11
3-12. Optical Pick-up Block 12
3-13. SENSOR Board 12
3-14. MOTOR (TB) Board 13
3-15. MOTOR (LD) Board 13

4. TEST MODE 14

5. MECHANICAL ADJUSTMENTS 17

6. ELECTRICAL ADJUSTMENTS 18

7. DIAGRAMS
7-1. Block Diagram – CD SERVO Section – 21
7-2. Block Diagram – MAIN Section – 22
7-3. Block Diagram – AMP/VIDEO Section – 23
7-4. Block Diagram
– PANEL/POWER SUPPLY Section – 24
7-5. Printed Wiring Board – CD Board
(Except RG290: MX model) – 26
7-6. Schematic Diagram – CD Board
(Except RG290: MX model) – 27
7-7. Printed Wiring Board – BD Board
(RG290: MX model) – 28
7-8. Schematic Diagram – BD Board
(RG290: MX model) – 29
7-9. Printed Wiring Boards – CHANGER Section – 30
7-10. Schematic Diagram – CHANGER Section – 31
7-11. Printed Wiring Board – DECK Board – 32
7-12. Schematic Diagram – DECK Board – 33
7-13. Printed Wiring Board – MAIN Board
(Except RG290: MX model) – 34
7-14. Schematic Diagram – MAIN Board (1/3)
(Except RG290: MX model) – 35
7-15. Schematic Diagram – MAIN Board (2/3)
(Except RG290: MX model) – 36
7-16. Schematic Diagram – MAIN Board (3/3)
(Except RG290: MX model) – 37
7-17. Printed Wiring Board – MAIN Board
(RG290: MX model) – 38
7-18. Schematic Diagram – MAIN Board (1/3)
(RG290: MX model) – 39
7-19. Schematic Diagram – MAIN Board (2/3)
(RG290: MX model) – 40
7-20. Schematic Diagram – MAIN Board (3/3)
(RG290: MX model) – 41
7-21. Printed Wiring Board – MIC. AUX. HP Board – 42
7-22. Schematic Diagram – MIC. AUX. HP Board – 43
7-23. Printed Wiring Board – POWER Board (RG190) – 44
7-24. Schematic Diagram – POWER Board (RG190) – 45
7-25. Printed Wiring Board – POWER Board (RG290) – 46
7-26. Schematic Diagram – POWER Board (RG290) – 47
7-27. Printed Wiring Boards – CD-G Section
(RG290: MX model) – 48
7-28. Schematic Diagram – CD-G Section
(RG290: MX model) – 49
7-29. Printed Wiring Board – PANEL Board – 50
7-30. Printed Wiring Boards – KEY Section – 51
7-31. Schematic Diagram – PANEL/KEY Section – 52
7-32. Printed Wiring Board
– TRANSFORMER Board (RG190) – 54
7-33. Schematic Diagram
– TRANSFORMER Board (RG190) – 55
7-34. Printed Wiring Board
– TRANSFORMER Board (RG290) – 56
7-35. Schematic Diagram
– TRANSFORMER Board (RG290) – 57

8. EXPLODED VIEWS
8-1. Case Section 74
8-2. PANEL Board Section 75
8-3. Lid (Top) Section 76
8-4. Front Panel Section 77
8-5. MAIN Board Section 78
8-6. POWER Board, SUB WOOFER Board Section 79
8-7. Chassis Section 80
8-8. CD Mechanism Deck Section-1
(CDM74KF-K6BD83S) (Except Mexican model)/
(CDM74KF-F1BD84) (Mexican model) 81
8-9. CD Mechanism Deck Section-2
(CDM74KF-K6BD83S) (Except Mexican model)/
(CDM74KF-F1BD84) (Mexican model) 82

9. ELECTRICAL PARTS LIST 83

- Abbreviation
  MX: Mexican model

SECTION 1
SERVICING NOTES

NOTES ON HANDLING THE OPTICAL PICK-UP BLOCK OR BASE UNIT

The laser diode in the optical pick-up block may suffer electrostatic break-down because of the potential difference generated by the charged electrostatic load, etc. on clothing and the human body.
During repair, pay attention to electrostatic break-down and also use the procedure in the printed matter which is included in the repair parts.
The flexible board is easily damaged and should be handled with care.

NOTES ON LASER DIODE EMISSION CHECK

The laser beam on this model is concentrated so as to be focused on the disc reflective surface by the objective lens in the optical pick-up block. Therefore, when checking the laser diode emission, observe from more than 30 cm away from the objective lens.

UNLEADED SOLDER

Boards requiring use of unleaded solder are printed with the lead-free mark (LF) indicating the solder contains no lead.
(Caution: Some printed circuit boards may not come printed with the lead free mark due to their particular size)

: LEAD FREE MARK

Unleaded solder has the following characteristics.

- Unleaded solder melts at a temperature about 40 °C higher than ordinary solder.
  Ordinary soldering irons can be used but the iron tip has to be applied to the solder joint for a slightly longer time.
  Soldering irons using a temperature regulator should be set to about 350 °C.
  Caution: The printed pattern (copper foil) may peel away if the heated tip is applied for too long, so be careful!
- Strong viscosity
  Unleaded solder is more viscou-s (sticky, less prone to flow) than ordinary solder so use caution not to let solder bridges occur such as on IC pins, etc.
- Usable with ordinary solder
  It is best to use only unleaded solder but unleaded solder may also be added to ordinary solder.

RELEASING THE ANTITHEFT LOCK

The disc table lock function for the antitheft of an demonstration disc in the store is equipped.

Releasing Procedure :

1. Press the I/⏻ button to turn the power on.
2. While pressing the ☐ button, press the ⏏ button until "UNLOCKED" displayed on the fluorescent indicator tube (around 5 seconds).

Note: When "LOCKED" is displayed, the antitheft lock is not released by turning power on/off with the I/⏻ button.

MODEL IDENTIFICATION
– Back Panel –

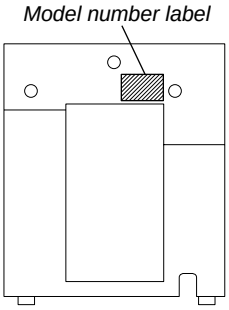

Label indication	Model
2-664-545-0□ CED	RG290: AEP, UK
2-664-546-0□ E3	RG290: E3
2-664-547-0□ SP2	RG290: SP
2-664-548-0□ AU	RG290: AUS
2-664-550-0□ E51	RG290: E51
2-664-551-0□ AR	RG290: AR
2-664-552-0□ MX4	RG290: MX
2-664-553-0□ CED	RG190: AEP
2-664-554-0□ E3	RG190: E3
2-664-555-0□ SP2	RG190: SP
2-664-556-0□ AU	RG190: AUS
2-664-557-0□ EA3	RG190: EA
2-664-558-0□ E51	RG190: E51
2-664-559-0□ AR	RG190: AR
2-665-213-0□ E2	RG190: E2
2-666-351-0□ E2	RG290: E2
2-674-578-0□ RU	RG290: RU
2-674-579-0□ RU	RG190: RU

- Abbreviation
  AR : Argentina model
  AUS : Australian model
  E2 : 120V AC area in E model
  E3 : 240V AC area in E model
  E51 : Chilean and Peruvian models
  EA : Saudi Arabia model
  MX : Mexican model

This section is extracted from instruction manual.

Guide to parts and controls

Unit

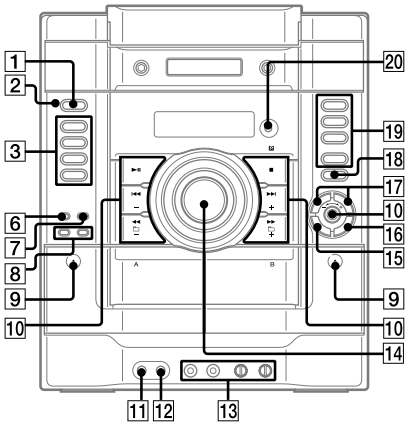

Remote

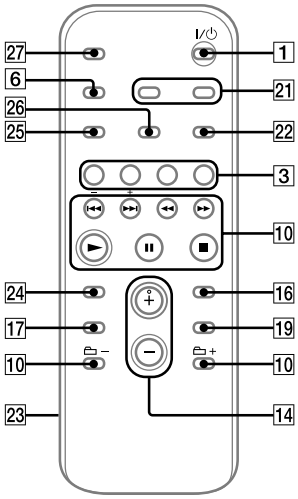

This manul mainly explains operations using the remote, but the same operations can also be performed using the buttons on the unit having the same or similar names.

1 I/⏻ (power) button
Press to turn on the system.

2 STANDBY indicator
Lights up when the system is turned off.

3 CD button
Press to select the CD function.

TUNER/BAND button
Press to select the TUNER function. Press to select FM or AM reception mode.

Unit: TAPE A/B button
Remote: TAPE button
Press to select the TAPE function. Press to select TAPE A or TAPE B.

AUDIO IN button
Press to select the AUDIO IN function.

FUNCTION button
Press to select the function.

6 Mexican model:
Unit: KARAOKE button
Press to activate the karaoke mode.
Remote: DISPLAY button
Press to change the information on the display.

Other models:
DISPLAY button
Press to change the information on the display.

7 ILLUMINATION button
Press to change the illumination pattern around the VOLUME control 14.

8 Buttons for synchro recording or manual recording
REC PAUSE/START button,
CD SYNC button
Press to record on a tape.

9 PUSH ⏏
Press to insert or eject a tape.

10 Playback buttons
Unit: ►II (play/pause) button
Remote: ► (play) button,
II (pause) button
Press to start or pause playback.

■ (stop) button
Press to stop playback.

I◄◄/►►I (go back/go forward)
Press to select a track or file.

Unit: TUNING +/– button
Remote: +/– (tuning) button
Press to tune in the desired station.

🗀 +/– (select folder) button
Press to select a folder on an MP3 disc.

◄◄/►► (rewind/fast forward) button
Press to find a point in a track or file.

MULTI JOG dial (I◄◄/►►I (go back/go forward), +/– (tuning))
Turn to select a track or file. Turn to tune in the desired station. (Same as the I◄◄/►►I, +/– buttons on the remote)

11 PHONES jack
Connect the headphones.

12 AUDIO IN jack
Connect to an audio component.

13 Latin American model only:
MIC jack
Connect the microphone. Mexican model comes with 2 microphone jacks.
MIC LEVEL
Turn to adjust the microphone volume.

Mexican model only:
ECHO LEVEL
Turn to adjust the echo level.

14 Unit: VOLUME control
Turn to adjust the volume.

Remote: VOLUME +/– button
Press to adjust the volume.

15 EQ BAND button
Press to select the frequency band.

16 ENTER button
Press to enter the settings.

17 Sound buttons
Unit: GROOVE button,
SURROUND button
Remote: EQ button
Press to select the sound.

18 ≙ (open/close) button
Press to insert and eject a disc.

19 DISC 1 – 3 button
Press to select a disc. Press to switch to the CD function from other function.

Unit: DISC SKIP/EX-CHANGE button
Press to select a disc. Press to exchange a disc while playing.
Remote: DISC SKIP button
Press to select a disc.

20 Remote sensor

21 CLOCK/TIMER SELECT button
CLOCK/TIMER SET button
Press to set the clock and the timers.

22 REPEAT/FM MODE button
Press to listen to a disc, a single track or file repeatedly. Press to select the FM reception mode (monaural or stereo).

23 Battery compartment lid

24 CLEAR button
Press to delete a pre-programmed track.

25 TUNER MEMORY button
Press to preset the radio station.

26 PLAY MODE/TUNING MODE button
Press to select the play mode of a CD, MP3 or tape.
Press to select the tuning mode.

27 SLEEP button
Press to set the Sleep Timer.

SECTION 3
DISASSEMBLY

- This set can be disassembled in the order shown below.

3-1. DISASSEMBLY FLOW

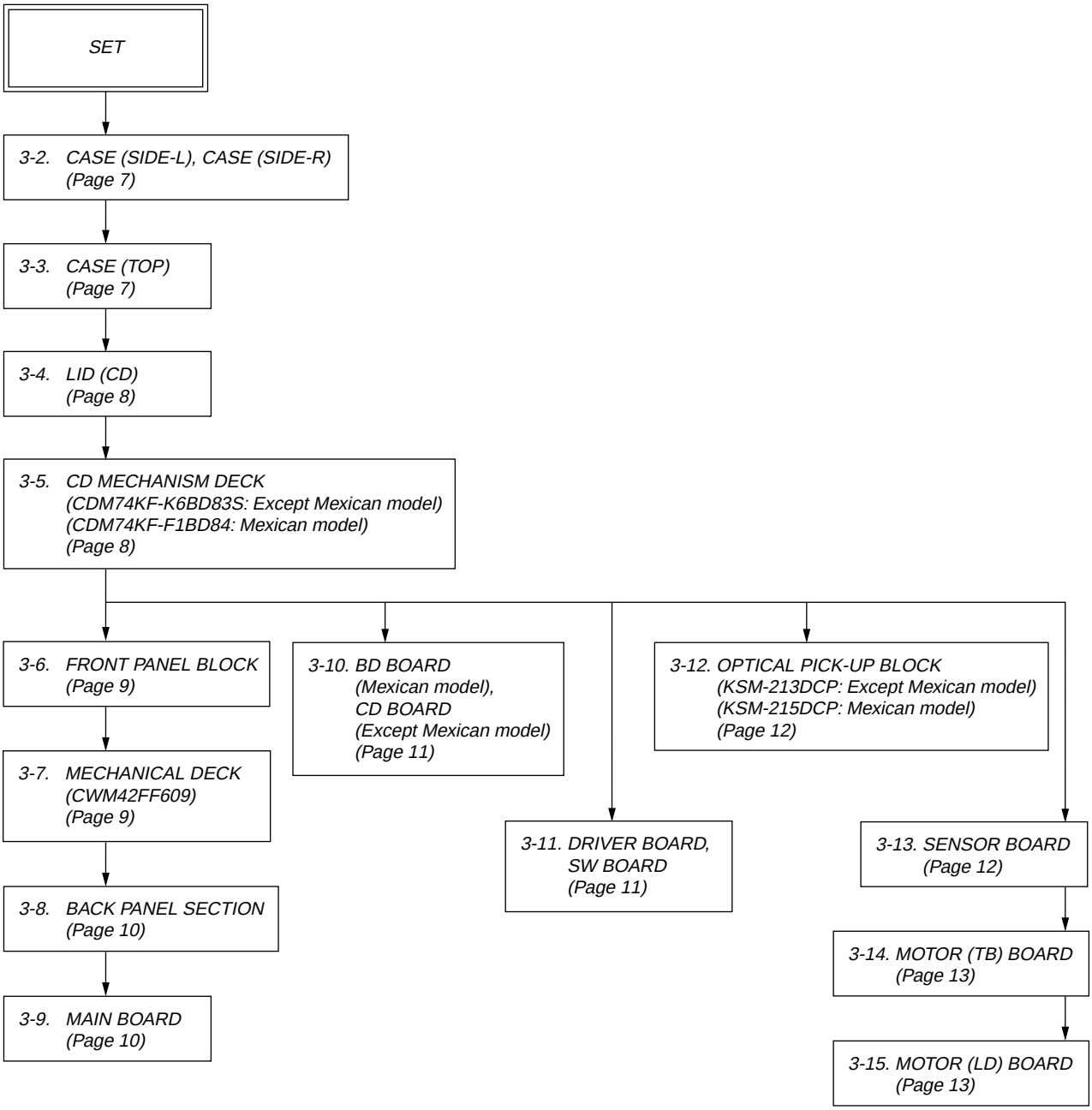

Note: Follow the disassembly procedure in the numerical order given.

3-2. CASE (SIDE-L), CASE (SIDE-R)

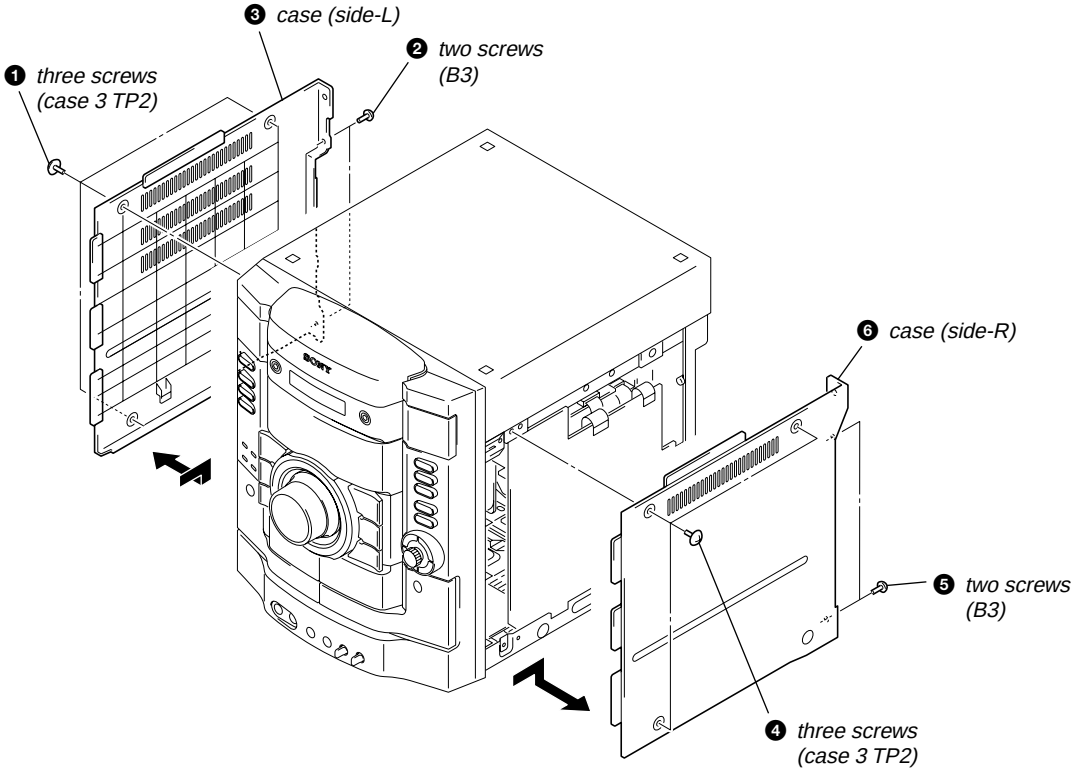

3-3. CASE (TOP)

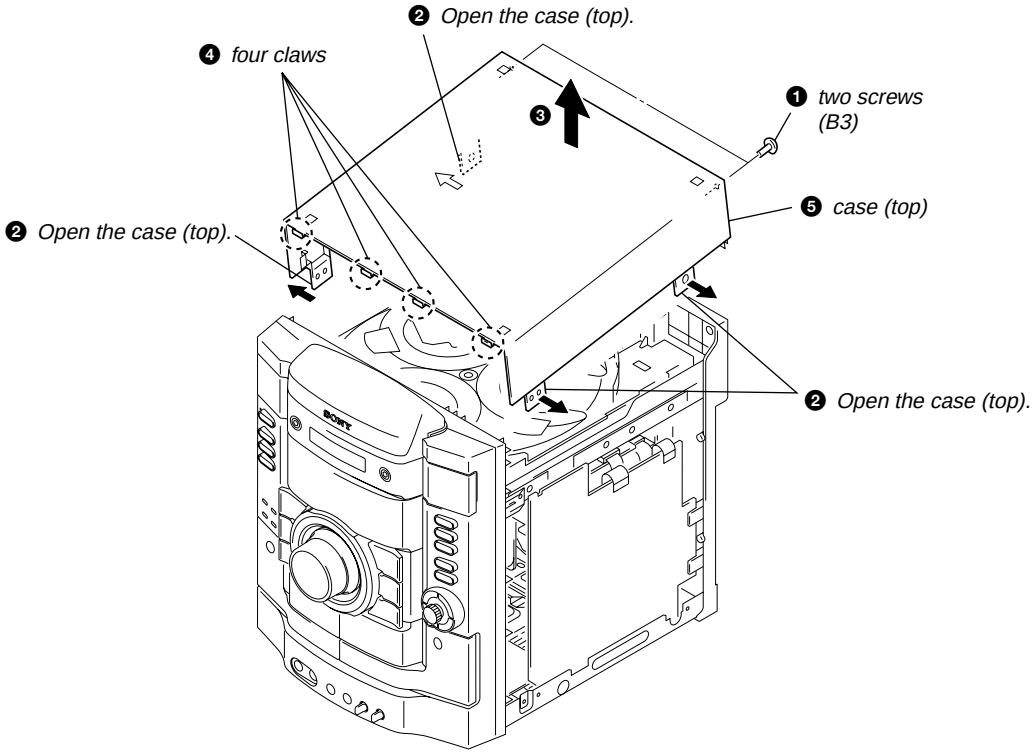

3-4. LID (CD)

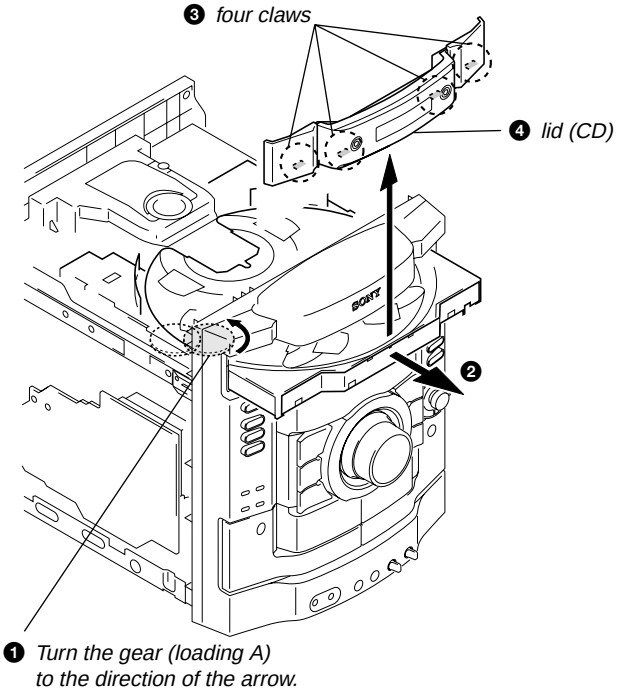

3-5. CD MECHANISM DECK (CDM74KF-K6BD83S: EXCEPT MEXICAN MODEL) (CDM74KF-F1BD84: MEXICAN MODEL)

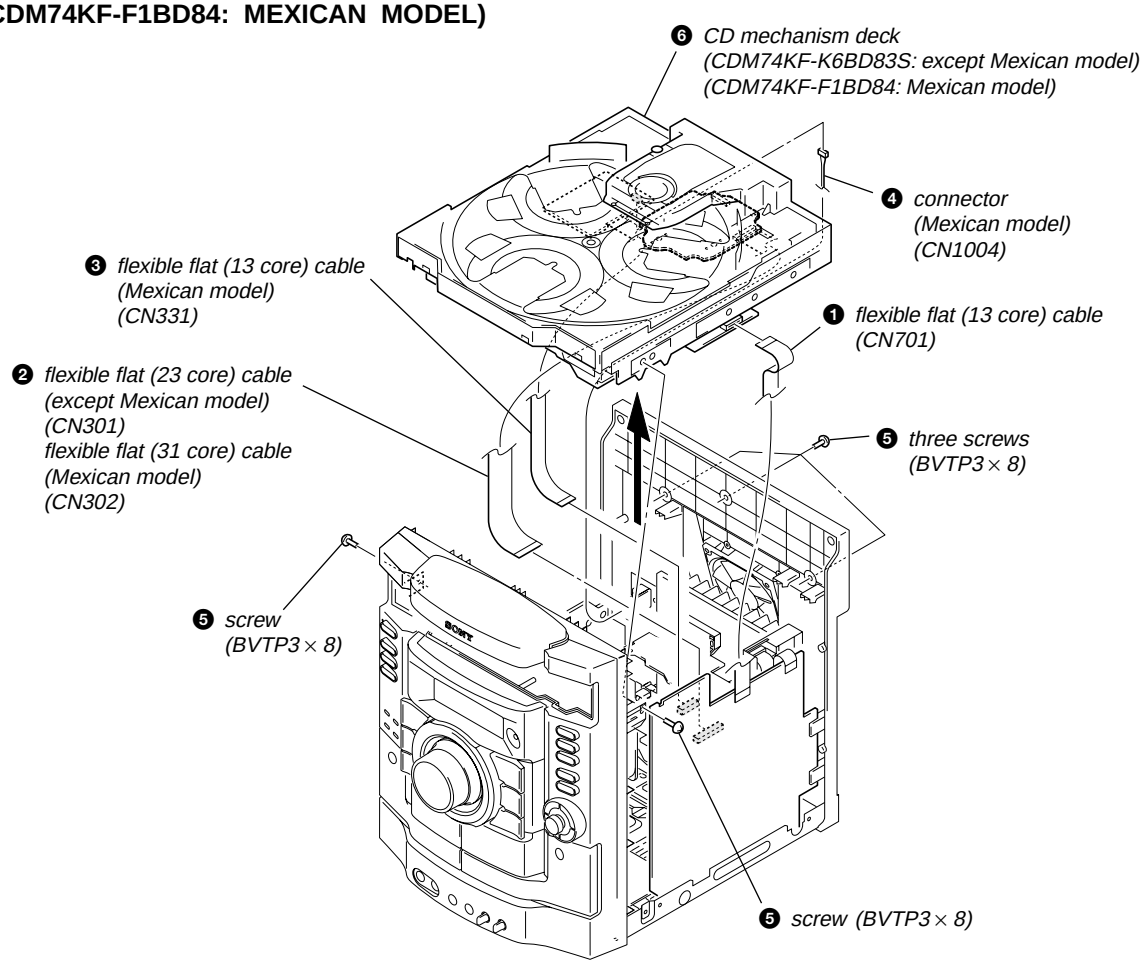

3-6. FRONT PANEL BLOCK

- Abbreviation
  AR : Argentina model
  AUS : Australian model
  E2 : 120V AC area in E model
  E3 : 240V AC area in E model
  E51 : Chilean and Peruvian models
  EA : Saudi Arabia model
  MX : Mexican model
  RU : Russian model
  SP : Singapore model

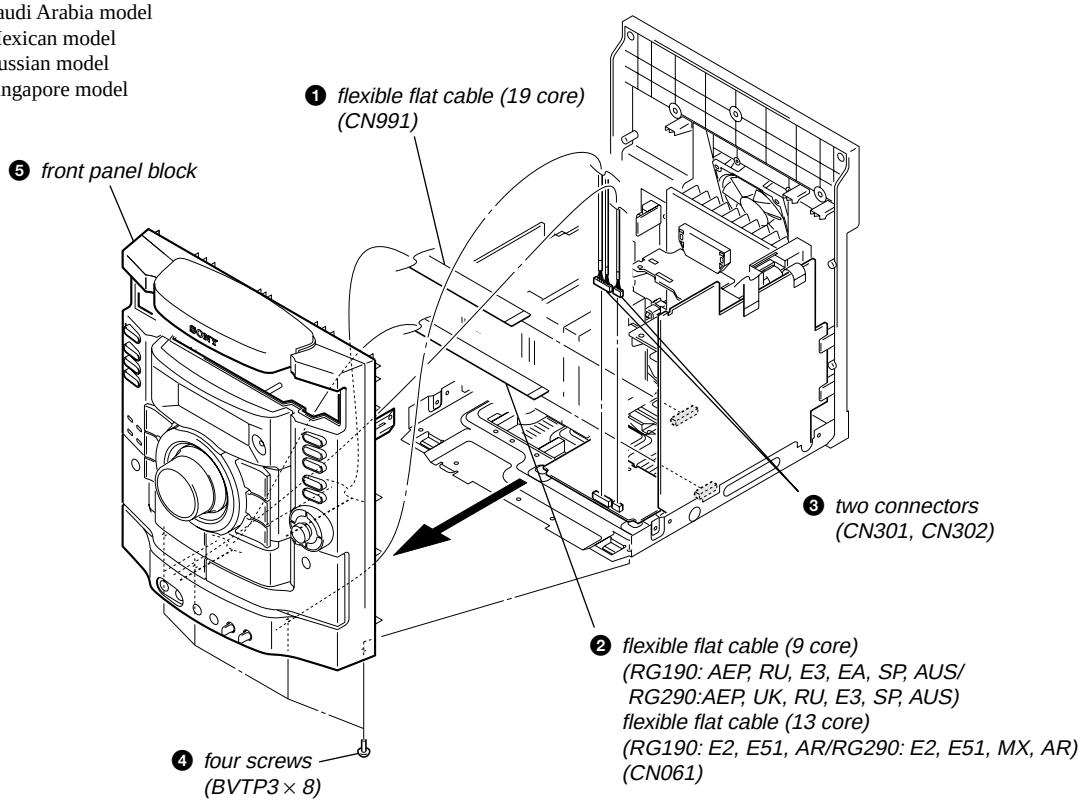

3-7. MECHA DECK (CWN42FF609)

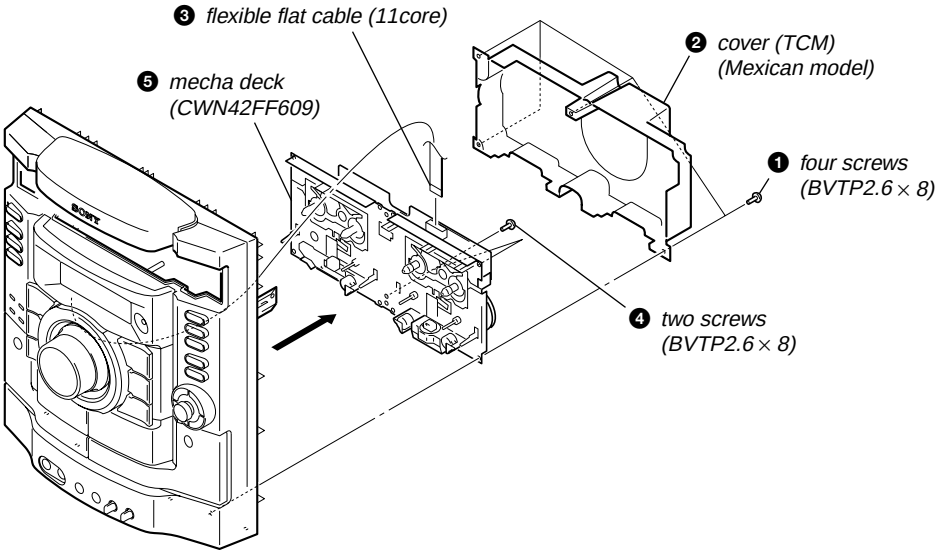

3-8. BACK PANEL SECTION

- Abbreviation
  AR : Argentina model
  AUS : Australian model
  E2 : 120V AC area in E model
  E3 : 240V AC area in E model
  E51 : Chilean and Peruvian models
  EA : Saudi Arabia model
  MX : Mexican model
  RU : Russian model
  SP : Singapore model

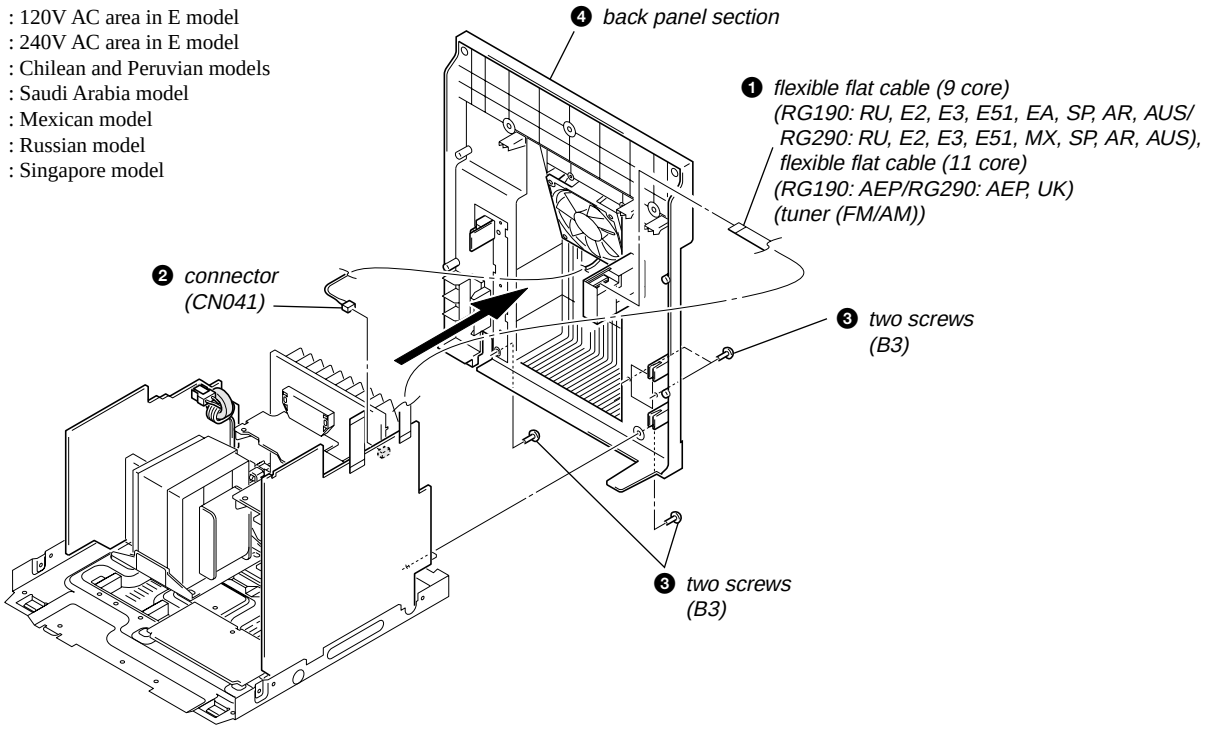

3-9. MAIN BOARD

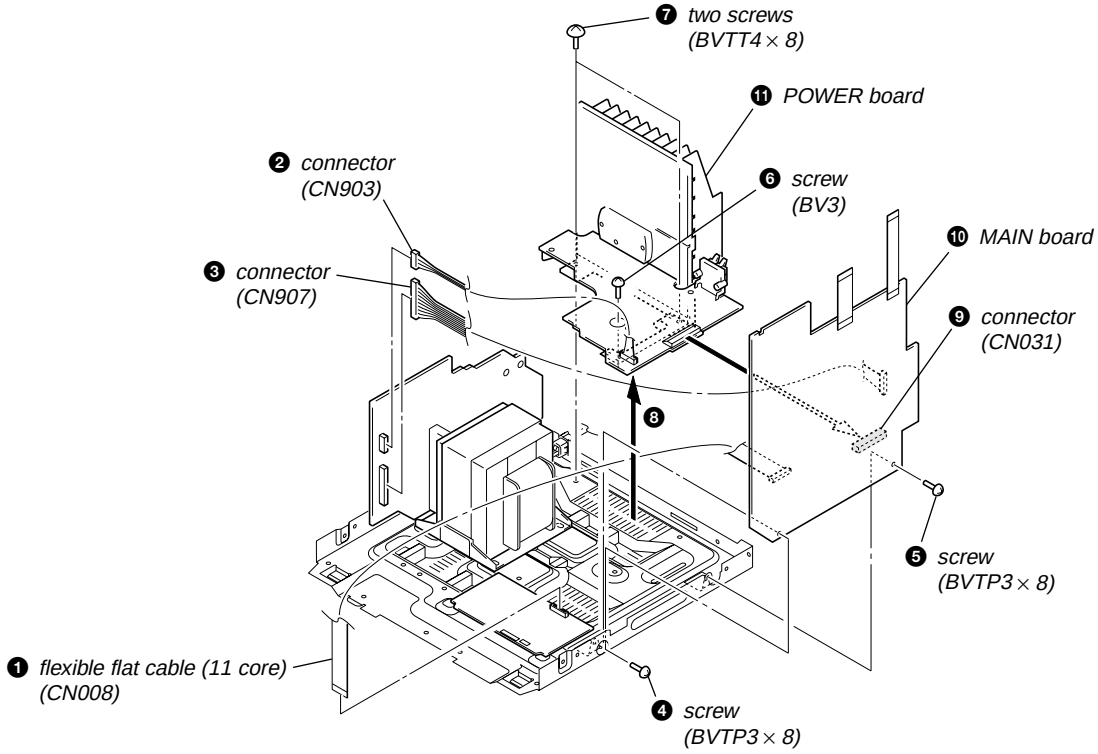

3-10. BD BOARD (MEXICAN MODEL), CD BOARD (EXCEPT MEXICAN MODEL)

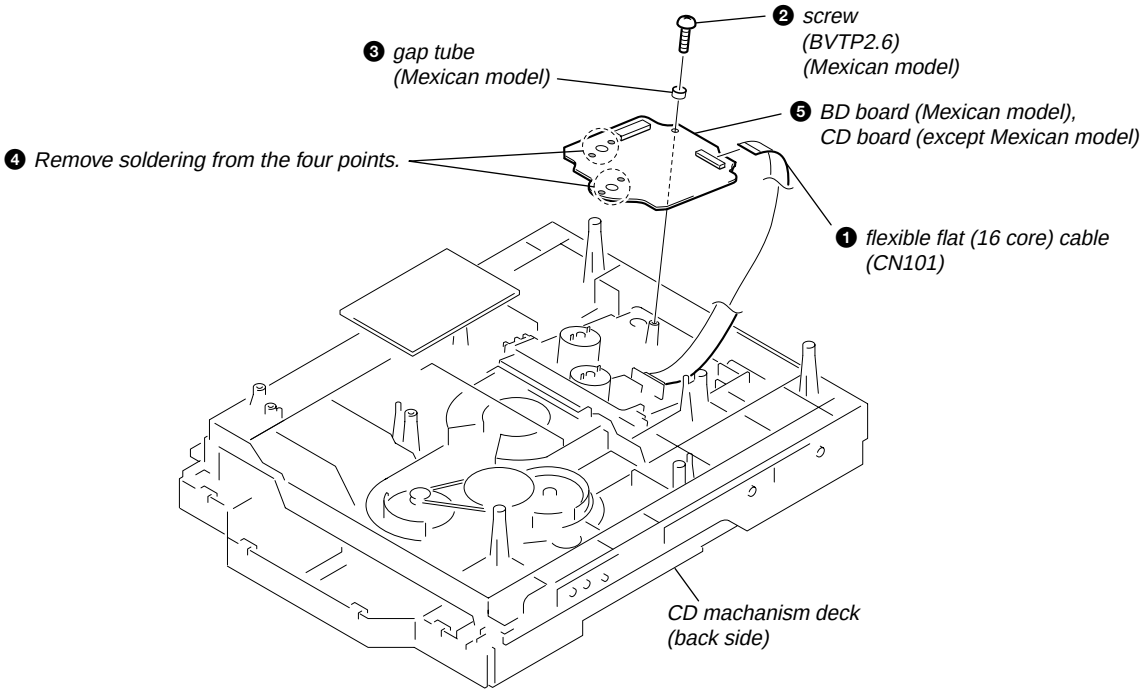

3-11. DRIVE BOARD, SW BOARD

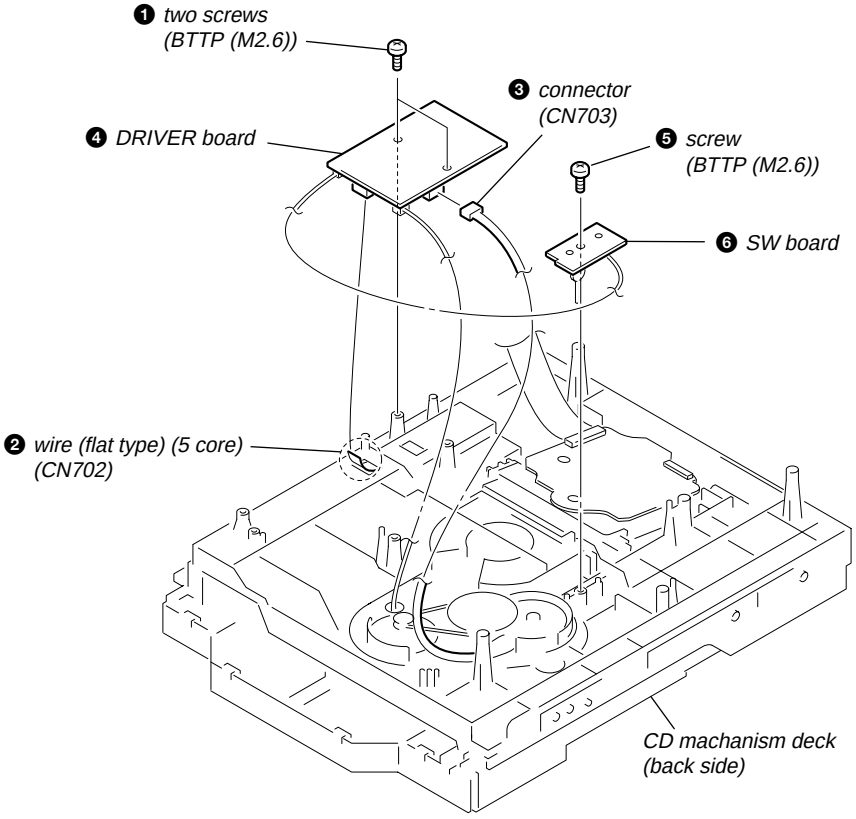

3-12. OPTICAL PICK-UP BLOCK

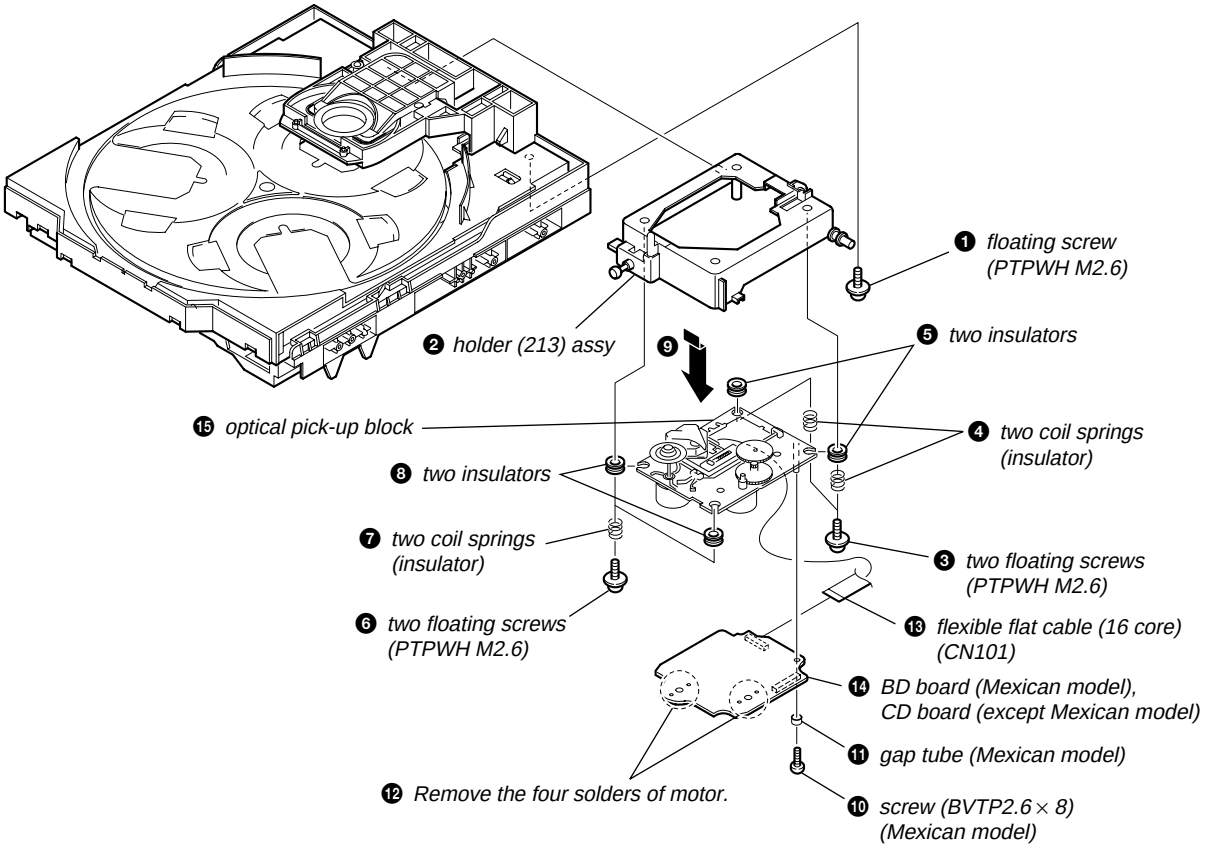

3-13. SENSOR BOARD

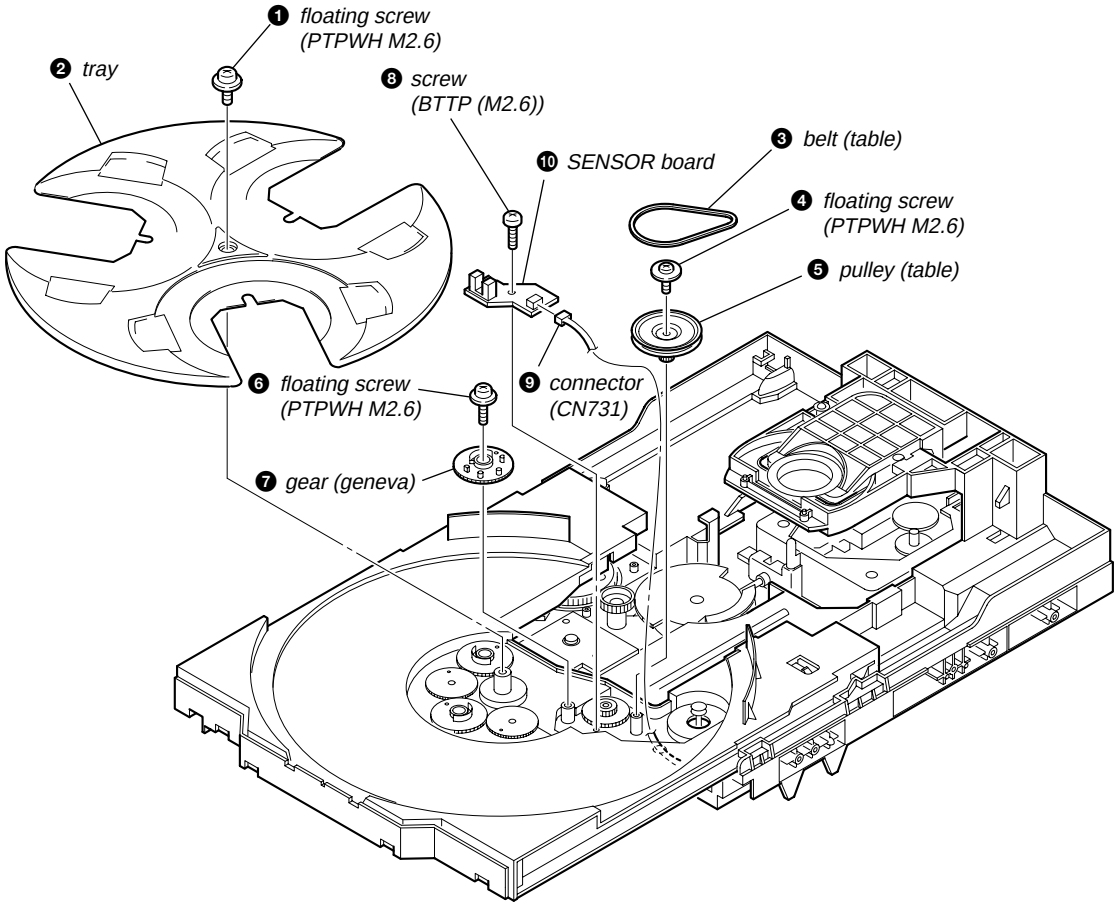

3-14. MOTOR (TB) BOARD

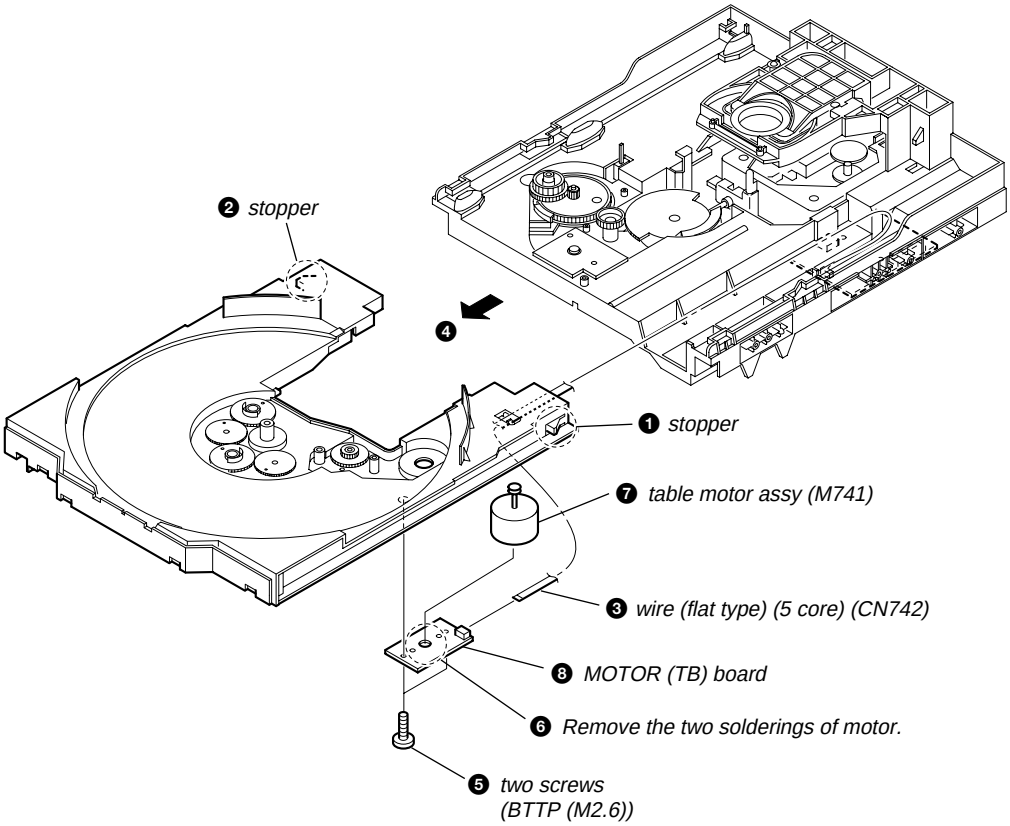

3-15. MOTOR (LD) BOARD

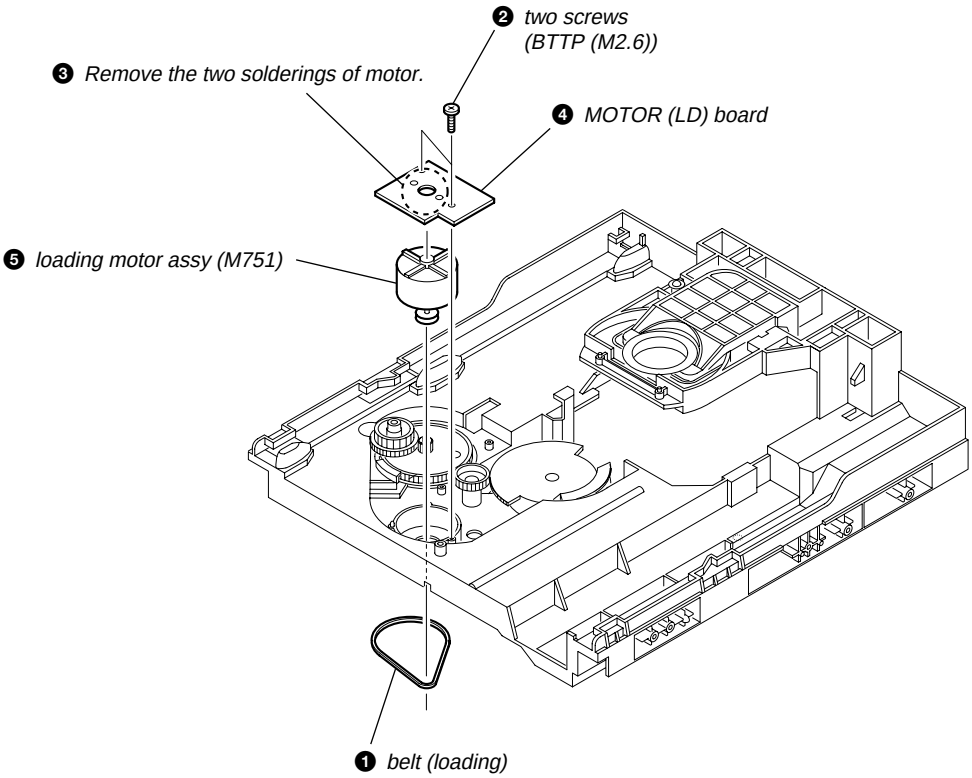

SECTION 4
TEST MODE

COLD RESET

The cold reset clears all data including preset data stored in the RAM to initial conditions. Execute this mode when returning the set to the customer.

Procedure:

1. Press three buttons of [□] ,[▷II] and [DISC 1] simultaneously.
2. The message "COLD RESET" is displayed on the fluorescent indicator tube momentarily, then becomes standby states.

TUNING STEP CHANGE-OVER (Except RG190: AEP, Russian, Saudi Arabia/ RG290: AEP, UK, Russian models)

A step of AM tuning interval can be changed over between 9 kHz and 10 kHz.

Procedure:

1. Press the [I/⏻] button to turn the power on.
2. Press the [TUNER/BAND] button to select "AM".
3. Press the [I/⏻] button to turn the power off.
4. Press two buttons of [TUNING –] and [I/⏻] simultaneously.
5. The message "AM 9K STEP" or "AM 10K STEP" is displayed on the fluorescent indicator tube, and thus the tuning interval is changed over.

CD SHIP (LOCK) MODE

This mode moves the optical pick-up to the position durable to vibration. Use this mode when returning the set to the customer after repair.

Procedure:

1. Press the [I/⏻] button to turn the power on.
2. Press the [CD] button to select "CD".
3. Press two buttons of [▷II] and [POWER] simultaneously.
4. The message "LOCK" is displayed on the fluorescent indicator tube, and the CD ship mode is set.

CD SHIP (LOCK) MODE & COLD RESET

This mode is used to perform CD ship (lock) mode and cold reset simultaneously.

Procedure:

1. Press the [I/⏻] button to turn the power on.
2. Press the [CD] button to select "CD".
3. Press three buttons of [□] , [CD] and [≜] simultaneously.
4. The message "COLD RESET" is displayed on the fluorescent indicator tube momentarily, then becomes standby states.

ANTITHEFT LOCK MODE

This mode is used to unable to take sample disc out of disc table in the shop.

Procedure:

1. Press the [I/⏻] button to turn the power on.
2. Press the [CD] button to select "CD".
3. Press two buttons of [□] and [≜] for 5 seconds.
4. The message "LOCKED" is displayed on the fluorescent indicator tube and the disc table is locked. (Even if pressing the [≜] button, the message "LOCKED" is displayed on the fluorescent indicator tube and the disc table is locked)
5. To release this mode, press two buttons of [□] and [≜] for 5 seconds.
6. The message "UNLOCKED" is displayed on the fluorescent indicator tube and the disc table is unlocked.

AMP TEST MODE

This mode is used to display the parameter of amplifier IC and display the VACS status.

Procedure:

1. Press the [I/⏻] button to turn the power on.
2. Press three buttons of [□] , [▷II] and [≜] simultaneously.
3. When the AMP test mode is activated, the message "AMP TEST IN" is displayed on the fluorescent indicator tube momentarily, then amplifier adjustment mode is displayed on the fluorescent indicator tube.
4. Press the [REC PAUSE/START] button to changed over between VACS status display mode and the amplifier IC parameter display mode.
5. In this mode, press the [ENTER] button to changed over DBFB on/off, and "DBFB ON" or "DBFB OFF" is displayed on the fluorescent indicator tube.
6. In this mode, press the [SURROUND] button to changed over surround on/off, and "SURROUND ON" or "SURROUND OFF" is displayed on the fluorescent indicator tube.
7. In this mode, press the [EQ BAND] button to enter the equalizer adjustment mode.
   In the equalizer adjustment mode, press the [EQ BAND] button to change over the adjustment band as LOW/MID/HIGH. And turn the multi jog knob to adjust the equalizer level of each bands.
8. To release the amplifier IC parameter display mode or equalizer adjustment mode, press the [I/⏻] button to the power off.

MC TEST MODE

This mode is used to check operations of microprocessor.

Procedure:

1. Press the [I/⏻] button to turn the power on.
2. Press three buttons of [□] , [▷II] and [DISC 3] simultaneously.
3. When the MC test mode is activated, VACS level is displayed on the fluorescent indicator tube momentarily.
4. Turn the multi jog knob clockwise, the message "ALL EQ MAX" is displayed on the fluorescent indicator tube momentarily and turn the multi jog knob counter-clockwise, the message "ALL EQ MIN" is displayed on the fluorescent indicator tube momentarily.
5. Press the [ENTER] button, the message "ALL EQ FLAT" is displayed on the fluorescent indicator tube momentarily.
6. Turn the [VOLUME] knob clockwise, the message "VOLUME MAX" is displayed on the fluorescent indicator tube momentarily and turn the [VOLUME] knob counterclockwise, the message "VOLUME MIN" is displayed on the fluorescent indicator tube momentarily.
7. Press the [REC PAUSE/START] button to changed over VACS on/off.
8. Press the [I/⏻] button to release from this mode, then cold reset is performed.

VERSION DISPLAY MODE

This mode is used to check the model, destination and software version.

Procedure:

1. Press the [I/⏻] button to turn the power on.
2. Press three buttons of [□] ,[▷II] and [DISC 2] simultaneously.
3. Fluorescent indicator tube, and LEDs are all turned on.
4. Press the [REC PAUSE/START] button to display the software version and year, month, day of the software creation.
5. Press the [CD SYNC] button to display the model and destination.
6. To release this mode, press three buttons of [□], [▷II] and [DISC 2] simultaneously.

CD ERROR CODE DISPLAY MODE

This mode can be used for error code display of CD section.

Procedure:

1. Press the [I/⏻] button to turn the power on.
2. Press the [CD] button to select "CD".
3. Press three buttons of [□] , [CD] and [DISC 1] simultaneously.
4. When this mode is activated, mechanism deck error code is displayed on the fluorescent indicator tube.
5. Press the [REC PAUSE/START] button to changed over between optical pick-up error code display mode and mechanism deck error code mode.
6. Turn the multi jog knob to change over display of error history.
7. To release this mode, press the [I/⏻] button to turn the power off.

1. Mechanism Deck Error Code Mode

When this mode is entered, mechanism deck error code is displayed with the 10-character format on the fluorescent indicator tube.

The first digit from the left indicates:

The first digit from the left indicates which mode the error history is. In the mechanism deck error code mode, "M" is displayed on the fluorescent indicator tube.

The second digit from the left indicates:

(Error history number display)

The second digit from the left indicates which order the error history is. "1" indicates the latest error history, and each time the number increases by one, the error history goes back to one-previous error.

The third and 4th digit from the left indicates:
(Error status display)

The third and 4th digit from the left indicates which error status is indicated.

Display	Status
0 0	No error
0 8	Table operation time-out (Table does not move to the target position within the specified time)
1 6	In the chucking down operation, the operation was retried by the maximum number of times but the operation could not be completed
1 7	In the chucking up and down operation, the reverse recovery processing was attempted but it could not be recovered
1 8	In the chucking up operation, the operation was retried by the maximum number of times but the operation could not be completed
2 0	Loading operation time-out (Table does not move to the target position within the specified time)
2 2	As the chuck was in the ex-open status at the initialization, the closing was attempted but could not be completed

The 5th and 6th digit from the left indicates:
(Present status display)

The 5th and 6th digit from the left indicates which operating status when an error occurred is indicated.

Display	Status
0 1	Open completion status
0 2	From open status, the movement to chucking down position is under way
0 3	From chucking down position, the open operation is under way
0 4	Chucking down completion status
1 0	The chucking down operation is under way
1 1	The chucking up operation is under way
1 2	Close completion status
1 3	From close status, the ex-open operation is under way
1 4	From ex-open status, the close operation is under way
1 8	Ex-pen completion status

The 7th and 8th digit from the left indicates:
(Motor status display)

The 7th and 8th digit from the left indicates which motor output status when an error occurred is indicated.

Display	Status
× 0	No table motor output
× 1	Table motor forward output
× 2	Table motor backward output
× 3	Table motor break output
0 ×	No loading motor output
1 ×	Loading motor forward output
2 ×	Loading motor backward output
3 ×	Loading motor break output

The 9th and 10 th digit from the left indicates:
(Tray status display)

The 9th and 10th digit from the left indicates which target processing when an error occurred is indicated.

Display	Status
0 1	Open operation
1 2	Close operation
1 8	Ex-open operation

2. Optical Pick-up Error Code Mode

When this mode is entered, optical pick-up error code is displayed with the 8-character format on the fluorescent indicator tube.

The first digit from the left indicates:
The first digit from the left indicates which mode the error history is. In the optical pick-up error code mode, “D” is displayed on the fluorescent indicator tube.

The second digit from the left indicates:
(Error history No. display)
The second digit from the left indicates which order the error history is. “1” indicates the latest error history, and each time the number increases by one, the error history goes back to one-previous error.

The third and 4th digit from the left indicates:
(Error status display)
The third and 4th digit from the left indicates which error status is indicated.

Display	Status
0 1	Not focused (TOC read without a disc)
0 2	GFS NG (TOC read with a disc chucked)
0 3	Start operation time-over
0 4	Defocused continuously (Defocused during TOC reading)
0 5	Q code not entered for specified time
0 6	Tracking not turned ON
0 7	Blank disc (Blank disc TOC read)

The 5th and 6th digit from the left indicates:
(Error step display)
The 5th and 6th digit from the left indicates which processing when a trouble occurred

Display	Contents
0 1	Power OFF in progress
0 2	Initialize in progress
0 3	Oscillation stopping
0 4	From oscillation stop, oscillation starting
0 5	Stopping
0 6	Stop operation is under way
0 7	Start operation in progress
0 8	TOC read in progress
0 9	Search operation is under way
0 A	Playback operation is under way
0 B	Pause operation is under way
0 C	Playback manual search operation is under way
0 D	Pause manual search operation is under way
0 E	—

The 7th and 8th digit from the left indicates:
The 7th and 8th digit from the left indicates which operation in progress when a trouble occurred. (Step of each processing of the 5th and 6th digits is indicated)

5 REPEAT LIMIT CANCEL MODE

Number of repeat for CD playback is 5 times when the repeat mode is “REPEAT”. This mode is used to enables CD to repeat playback for limitless times.

Procedure:

1. Press the [I/⏻] button to turn the power on.
2. Press the [CD] button to select “CD”.
3. Press three buttons of [□] , [CD] and [▷II] simultaneously.
4. The message “LIMIT OFF” is displayed on the fluorescent indicator tube momentarily, CD repeat 5 limit is cancelled.

CD POWER MANAGE

This mode is used to changed over CD power on/off for decreasing of reception noise in the tuner mode.

Procedure:

1. Press the [I/⏻] button to turn the power on.
2. Press the [CD] button to select “CD”.
3. Press the [I/⏻] button to turn the power off.
4. Press two buttons of [□] and [I/⏻] simultaneously.
5. The message “CD POWER ON” or “CD POWER OFF” is displayed on the fluorescent indicator tube, and CD power on/off changed over in the tuner mode.

SECTION 5
MECHANICAL ADJUSTMENTS

PRECAUTION

1. Clean the following parts with a denatured-alcohol-moistened swab :

record/playback head	pinch roller
erase head	rubber belts
capstan	idlers

2. Demagnetize the record/playback head with a head demagnetizer. (Do not bring the head magnetizer close to the erase head.)
3. Do not use a magnetized screwdriver for the adjustments.
4. After the adjustments, appiy suitable locking compound to the parts adjusted.
5. The adjustments should be performed with the rated power supply voltage unless otherwise noted.

TORQUE MEASUREMENT

Mode	Torque Meter	Meter Reading
FWD	CQ-102C	2.6 – 6.9 mN·m (30 – 70 g·cm) (0.41 – 0.97 oz·inch)
FWD Back Tension	CQ-102C	0.15 – 0.59 mN·m (1.5 – 6.0 g·cm) (0.021 – 0.083 oz·inch)
FF/REW	CQ-201B	5.4 – 16.7 mN·m 55 – 170 g·cm) 0.76 – 2.35 oz·inch)

TAPE TENSION MEASUREMENT

Mode	Tension Meter	Meter Reading
FWD	CQ-403A	more than 100 g (more than 3.53 oz)

SECTION 6
ELECTRICAL ADJUSTMENTS

DECK SECTION | 0 dB=0.775 V

1. Demagnetize the record/playback head with a head demagnetizer.
2. Do not use a magnetized screwdriver for the adjustments.
3. After the adjustments, apply suitable locking compound to the parts adjust.

TEST TAPE

Tape	Signal	Used for
P-4-A063	6.3 kHz, -10 dB	Azimuth Adjustment

RECORD/PLAYBACK HEAD AZIMUTH ADJUSTMENT

Note 1: Remove the mecha deck before this adjustment.
(Refer to Section 3. DISASSEMBLY (See page 6))
Note 2: Perform this adjustment for both decks.

Procedure:

1. Mode: Playback

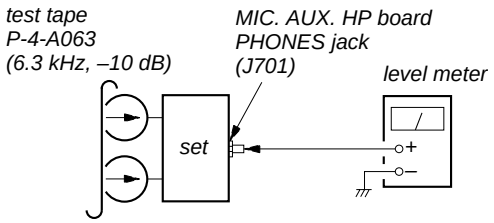

2. Turn the adjustment screw and check output peaks. If the peaks do not match for L-CH and R-CH, turn the adjustment screw so that outputs match within 1dB of peak.

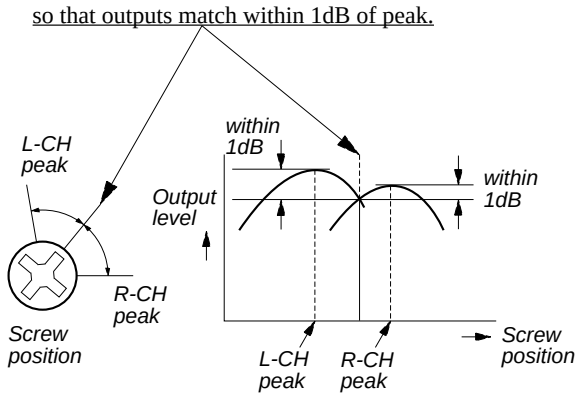

3. Mode: Playback

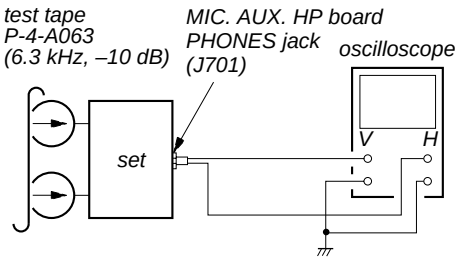

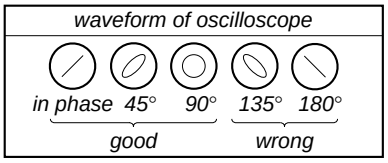

4. After the adjustments, apply suitable locking compound to the pats adjusted.

Adjustment Location: Playback Head (DECK-A)
Record/Playback/Erase Head (DECK-A)

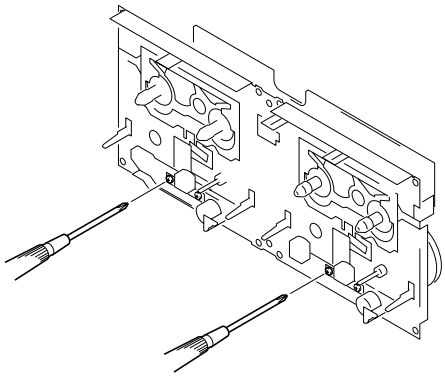

CD SECTION

Note:

1. CD Block is basically constructed to operate without adjustment.
2. Use YEDS-18 disc (3-702-101-01) unless otherwise indicated.
3. Use an oscilloscope with more than 10 MΩ impedance.
4. Clean the object lens by an applicator with neutral detergent when the signal level is low than specified value with the following checks.
5. Check the focus bias check when optical pick-up block is replaced.

- Abbreviation
  MX: Mexican model

FOCUS BIAS CHECK

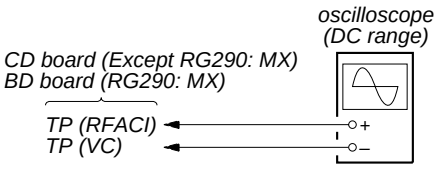

Procedure :

1. Connect oscilloscope to TP (RFACI) and TP (VC) on the CD board (Except RG290: MX) or BD board (RG290: MX).
2. Press the I/⏻ button to turn the power on, and press the ⏏ button to open the CD disc table.
3. Set disc (YEDS-18) on the tray and press the ▷II button to playback.
4. Confirm that oscilloscope waveform is as shown in the figure below. (eye pattern)
   A good eye pattern means that the diamond shape (◊) in the center of the waveform can be clearly distinguished.

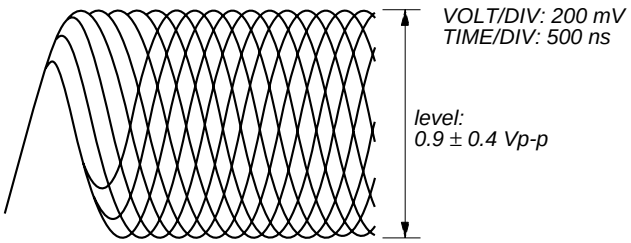

Connecting Location:

– CD Board (Conductor Side) (Except RG290: MX) –

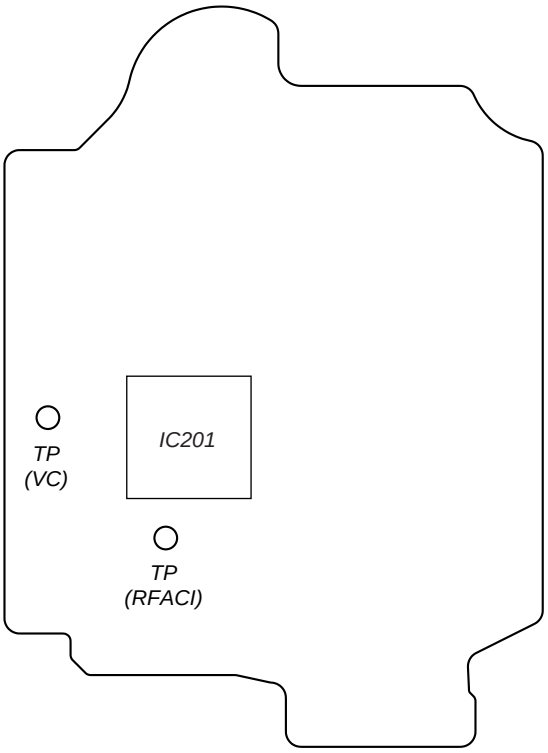

– BD Board (Conductor Side) (RG290: MX) –

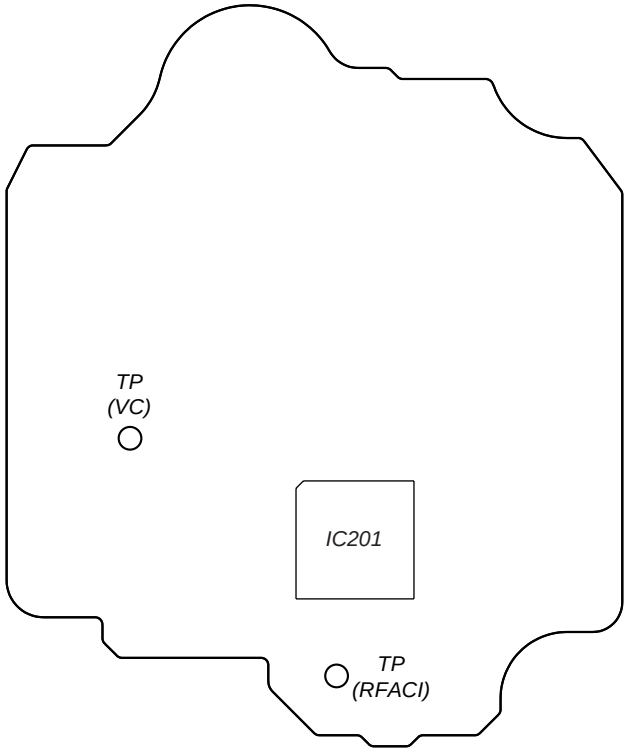

MEMO

SECTION 7
DIAGRAMS

7-1. BLOCK DIAGRAM – CD SERVO Section –

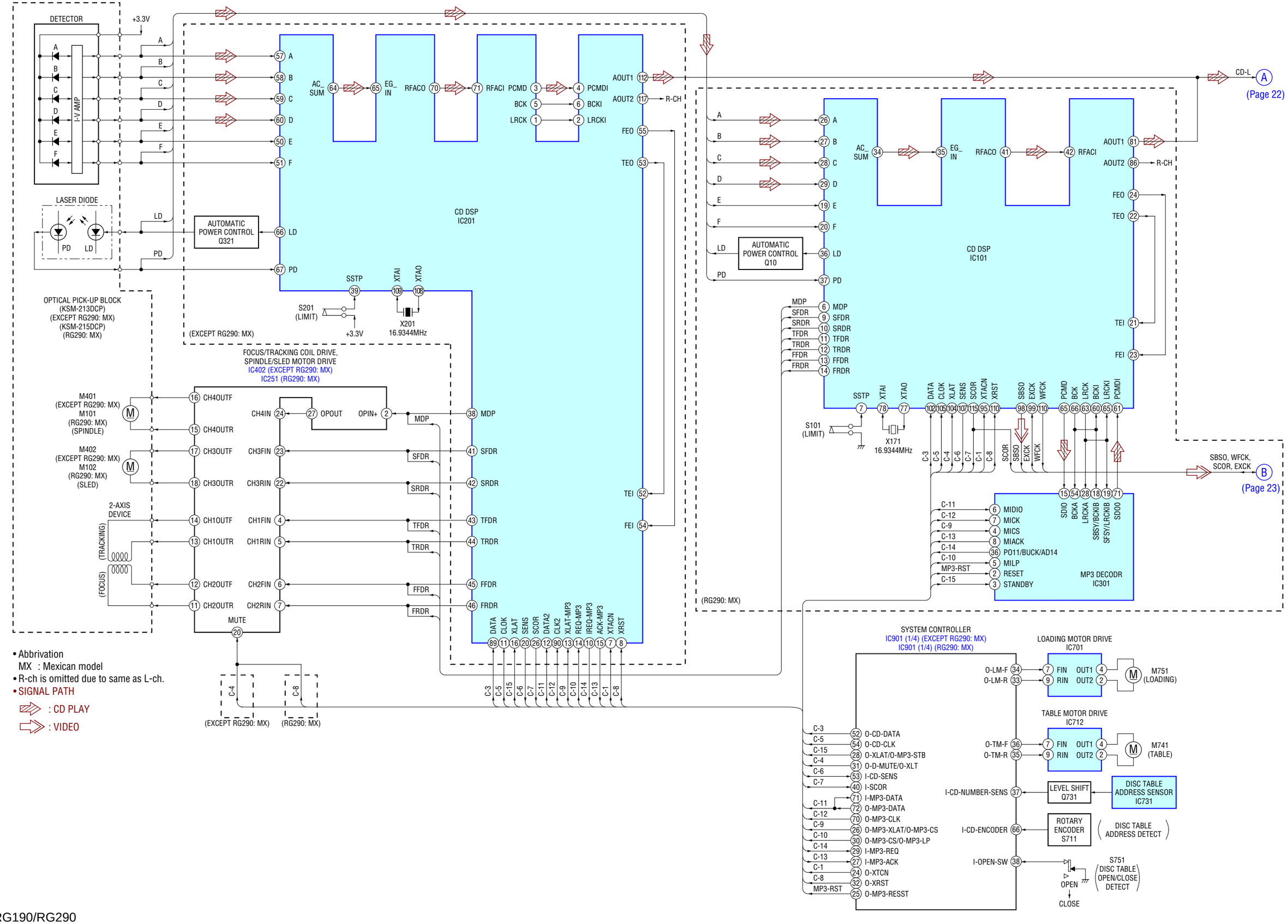

- Abbrivation
  MX : Mexican model
- R-ch is omitted due to same as L-ch.
- SIGNAL PATH
  : CD PLAY
  : VIDEO

7-2. BLOCK DIAGRAM – MAIN Section –

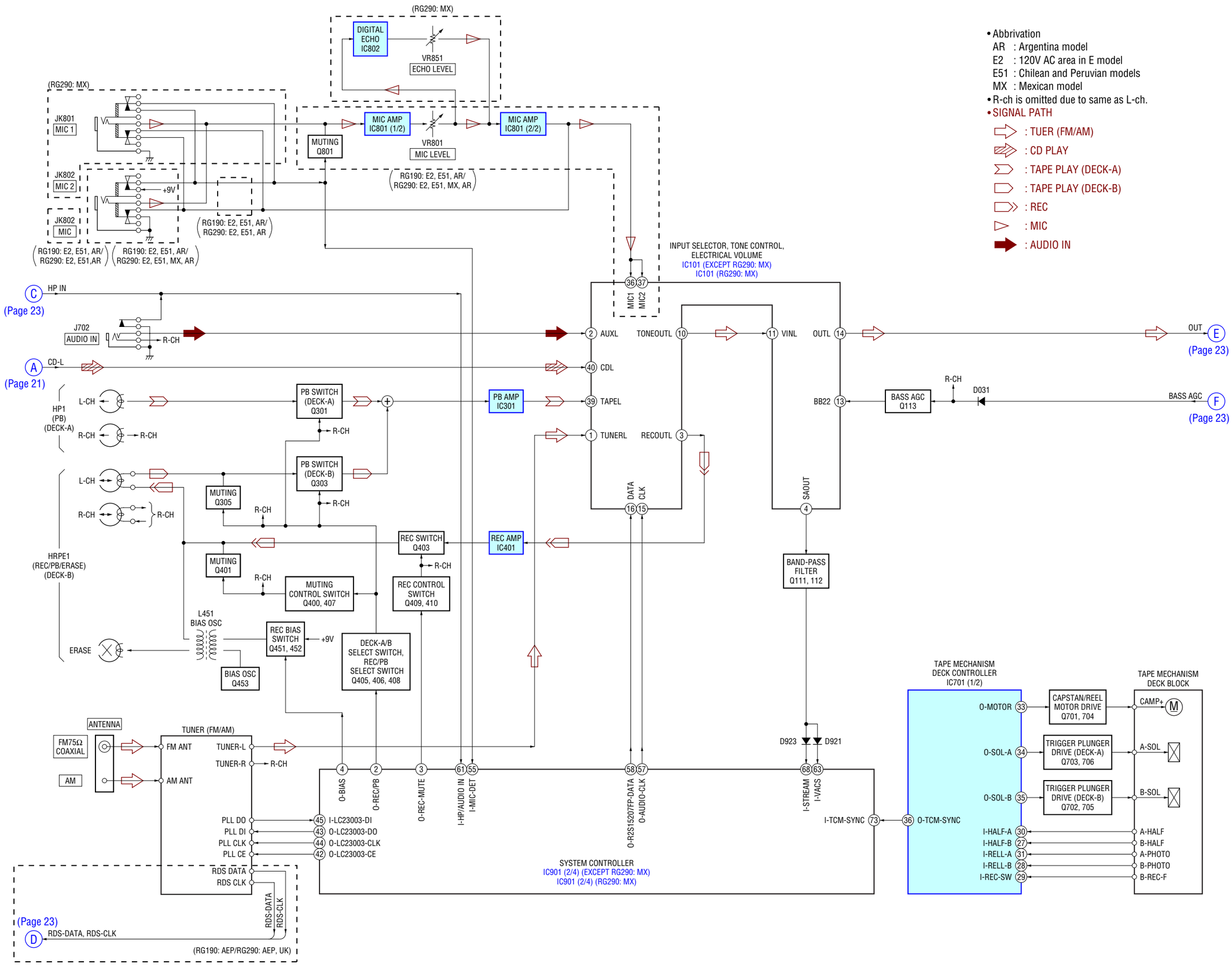

- Abbrivation
  - AR : Argentina model
  - E2 : 120V AC area in E model
  - E51 : Chilean and Peruvian models
  - MX : Mexican model
- R-ch is omitted due to same as L-ch.
- SIGNAL PATH
  - : TUER (FM/AM)
  - : CD PLAY
  - : TAPE PLAY (DECK-A)
  - : TAPE PLAY (DECK-B)
  - : REC
  - : MIC
  - : AUDIO IN

7-3. BLOCK DIAGRAM – AMP/VIDEO Section –

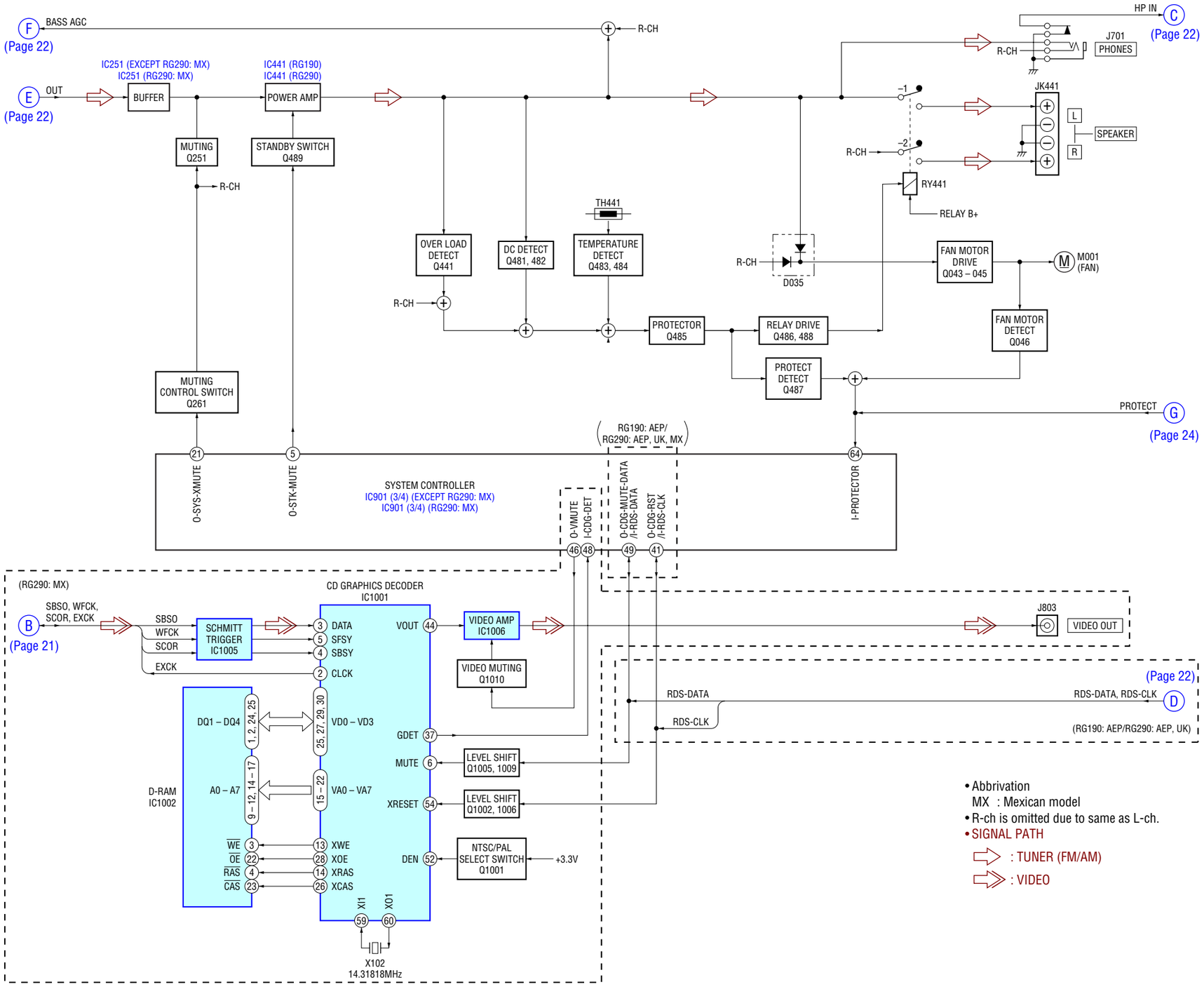

- Abbrivation
  MX : Mexican model
- R-ch is omitted due to same as L-ch.
- SIGNAL PATH
  : TUNER (FM/AM)
  : VIDEO

7-4. BLOCK DIAGRAM – PANEL/POWER SUPPLY Section –

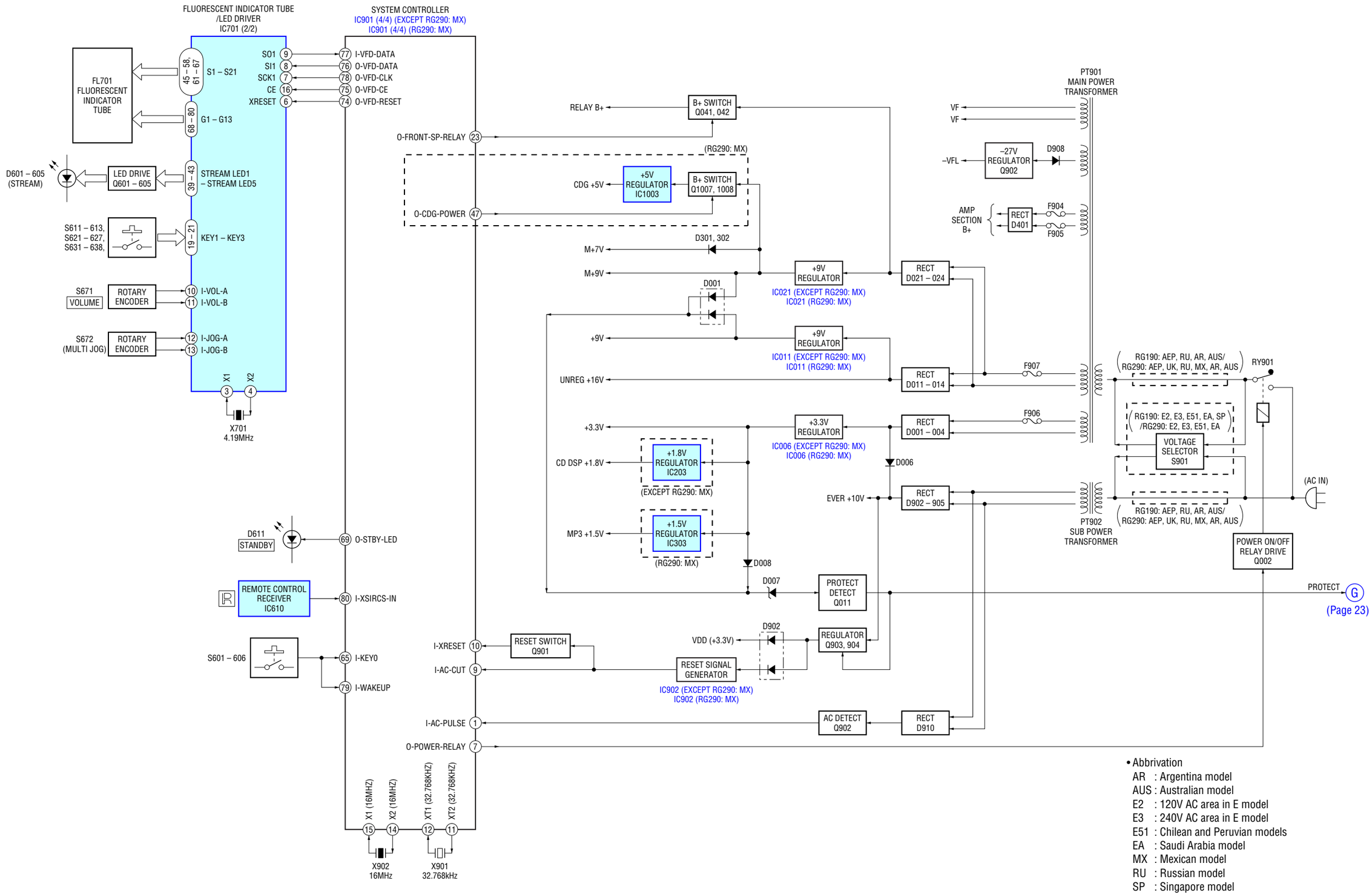

• Abbrivation
AR : Argentina model
AUS : Australian model
E2 : 120V AC area in E model
E3 : 240V AC area in E model
E51 : Chilean and Peruvian models
EA : Saudi Arabia model
MX : Mexican model
RU : Russian model
SP : Singapore model

• Note For Printed Wiring Boards and Schematic Diagrams

Note on Printed Wiring Board:
- ○——— : parts extracted from the component side.
- ——— : parts extracted from the conductor side.
- △ : internal component.
- ▬ : Pattern from the side which enables seeing.

(The other layers' patterns are not indicated.)

Caution:	
Pattern face side: (Conductor Side)	Parts on the pattern face side seen from the pattern face are indicated.
Parts face side: (Component Side)	Parts on the parts face side seen from the parts face are indicated.

Caution:	
Pattern face side: (Side B)	Parts on the pattern face side seen from the pattern face are indicated.
Parts face side: (Side A)	Parts on the parts face side seen from the parts face are indicated.

- Indication of transistor

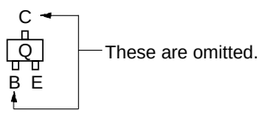

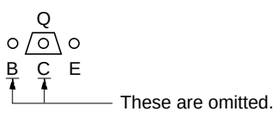

Note on Schematic Diagram:
- All capacitors are in µF unless otherwise noted. (p: pF) 50 WV or less are not indicated except for electrolytics and tantalums.
- All resistors are in Ω and 1/4 W or less unless otherwise specified.
- △ : internal component.
- : nonflammable resistor.
- : fusible resistor.
- : panel designation.

Note: The components identified by mark ⚠ or dotted line with mark ⚠ are critical for safety.
Replace only with part number specified.

- ▬▬ : B+ Line.
- ▬ ▬ ▬ : B– Line.
- Voltages and waveforms are dc with respect to ground under no-signal (detuned) conditions.
  – CD/BD Boards –
  no mark :CD PLAY
  – CD-G Board –
  no mark : CD-G PLAY
  – Other Boards –
  no mark : TUNER (FM/AM)
  ( ) : CD PLAY
  《 》 : TAPE PLAY
  { } : TAPE REC
  ＊ : Impossible to measure
- Voltages are taken with a VOM (Input impedance 10 MΩ). Voltage variations may be noted due to normal production tolerances.
- Waveforms are taken with a oscilloscope. Voltage variations may be noted due to normal production tolerances.
- Circled numbers refer to waveforms.
- Signal path.
  ⇨ : TUNER (FM/AM)
  ⇨ : CD PLAY
  : TAPE PLAY (DECK-A)
  : TAPE PLAY (DECK-B)
  : REC
  : MIC
  ➡ : AUDIO IN
  ⇨ : VIDEO
- Abbreviation
  AR : Argentina model
  AUS : Australian model
  E2 : 120 V AC area in E model
  E3 : 240 V AC area in E model
  E51 : Chilean and Peruvian models
  EA : Saudi Arabia model
  MX : Mexican model
  RU : Russian model
  SP : Singapore model

• Circuit Boards Location

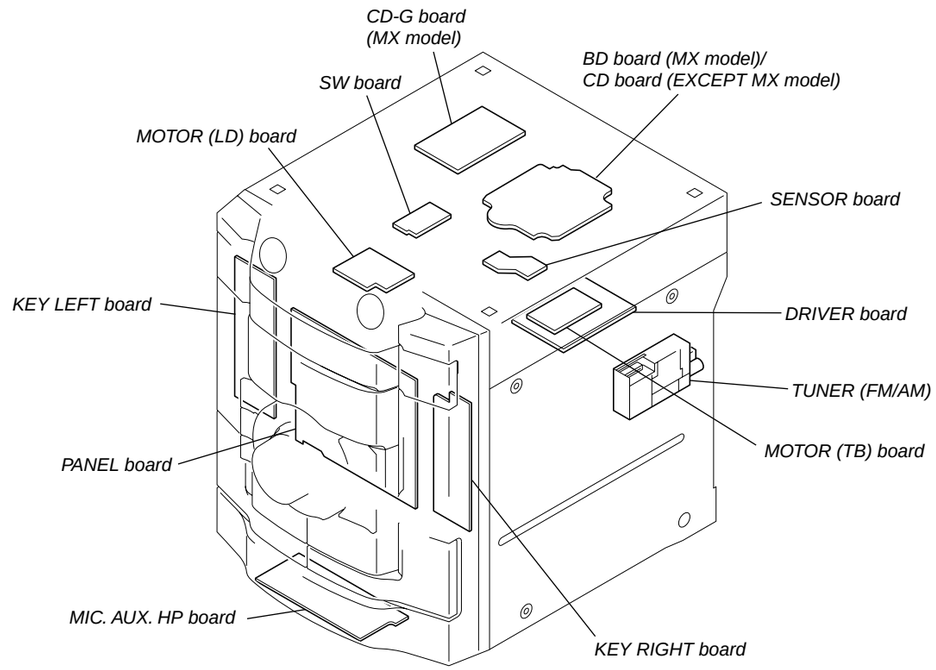

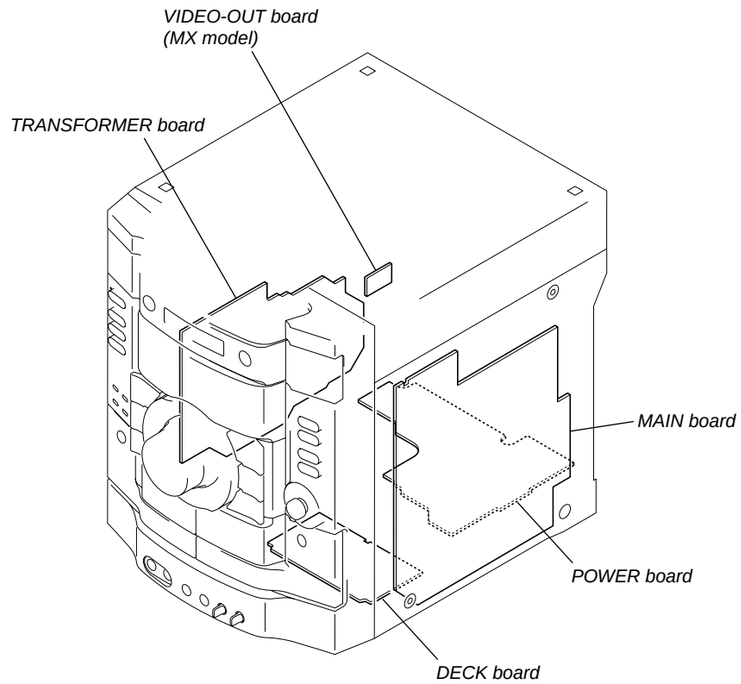

- Abbreviation
  MX : Mexican model

7-5. PRINTED WIRING BOARD – CD Board (Except RG290: MX model) – • See page 25 for Circuit Boards Location. **: Uses unleaded solder.**

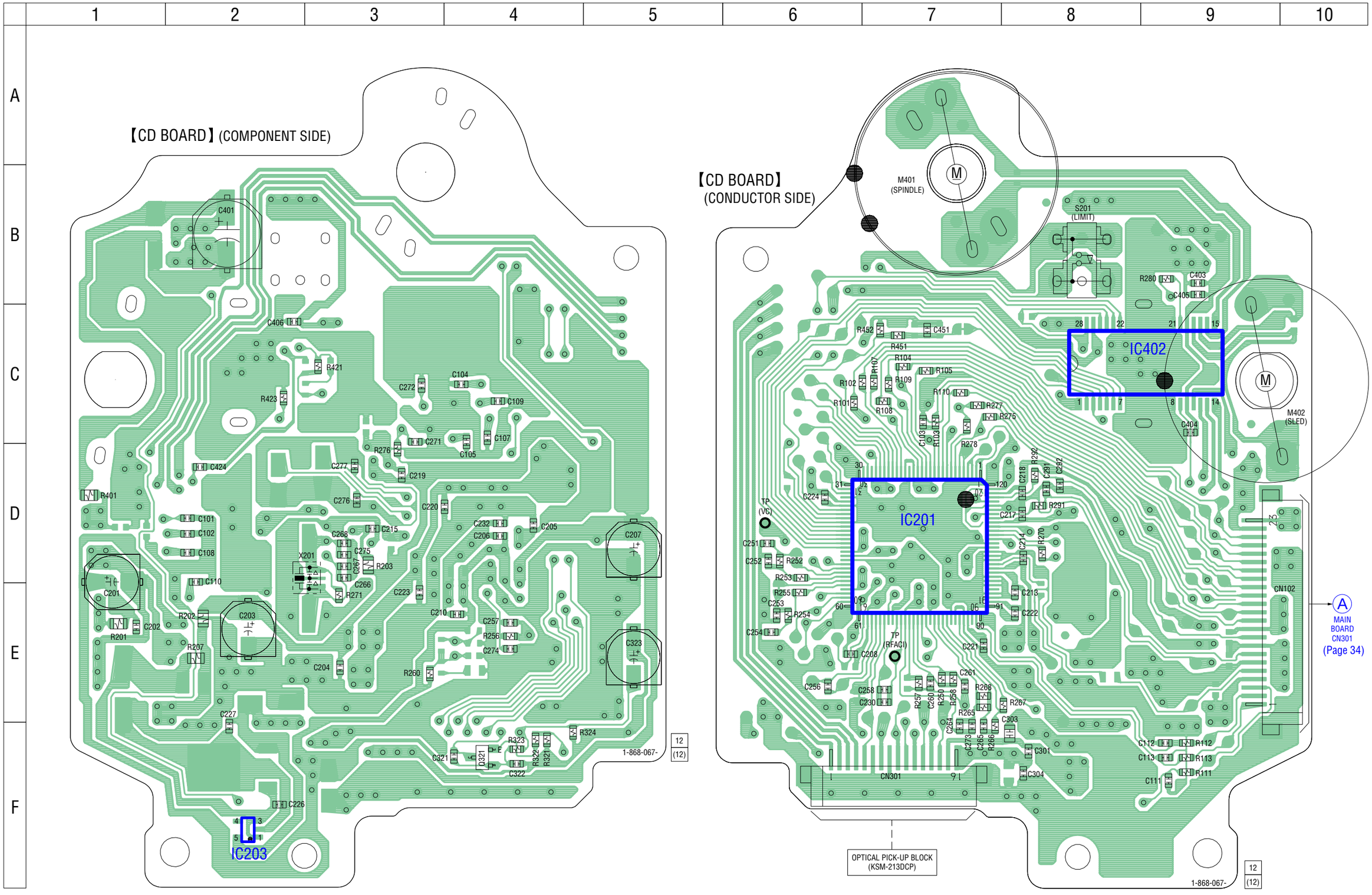

7-6. SCHEMATIC DIAGRAM – CD Board (Except RG290: MX model) –

• See page 53 for Waveforms. • See page 58 for IC Block Diagrams. • See page 62 for IC Pin Function Description.

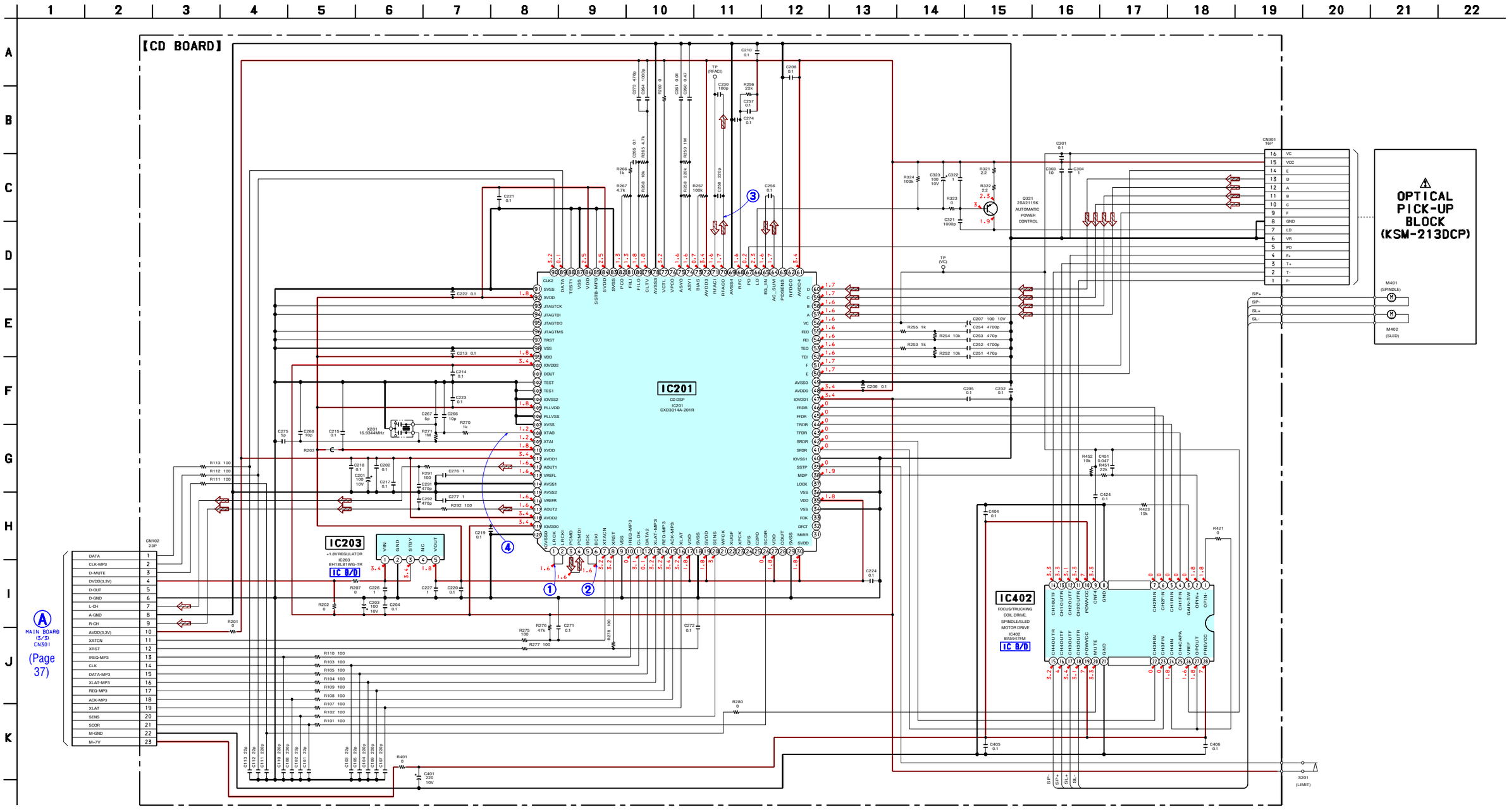

7-7. PRINTED WIRING BOARD – BD Board (RG290: MX model) –

• See page 25 for Circuit Boards Location. : Uses unleaded solder.

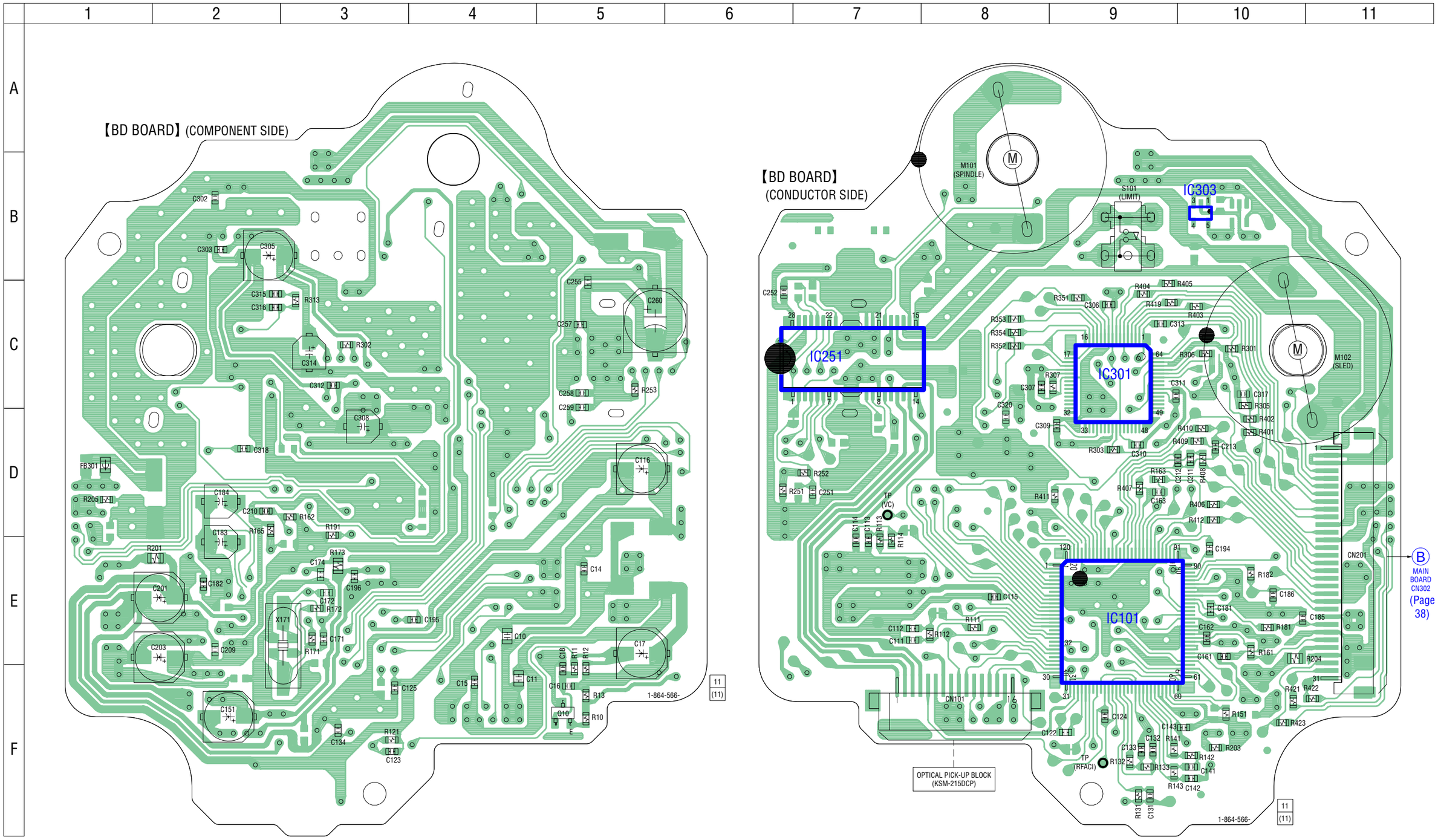

7-8. SCHEMATIC DIAGRAM – BD Board (RG290: MX model) –

• See page 53 for Waveforms. • See page 58 for IC Block Diagrams. • See page 62 for IC Pin Function Description.

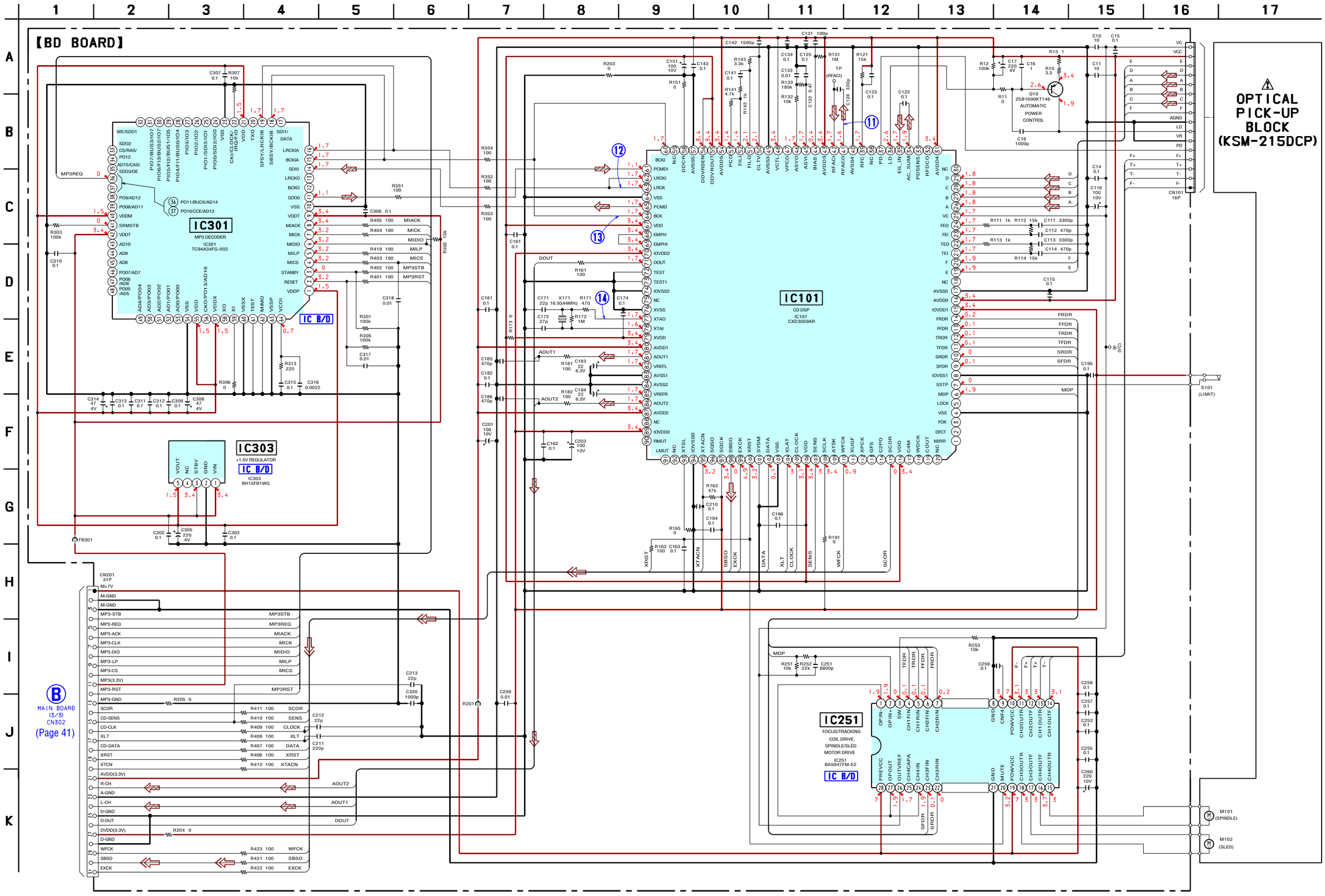

7-9. PRINTED WIRING BOARDS – CHANGER Section –

• See page 25 for Circuit Boards Location.

: Uses unleaded solder.

• **Semiconductor Location**

Ref. No.	Location
D701	E-7
D711	E-7
IC701	F-7
IC712	F-8
IC731	F-5
Q731	C-9

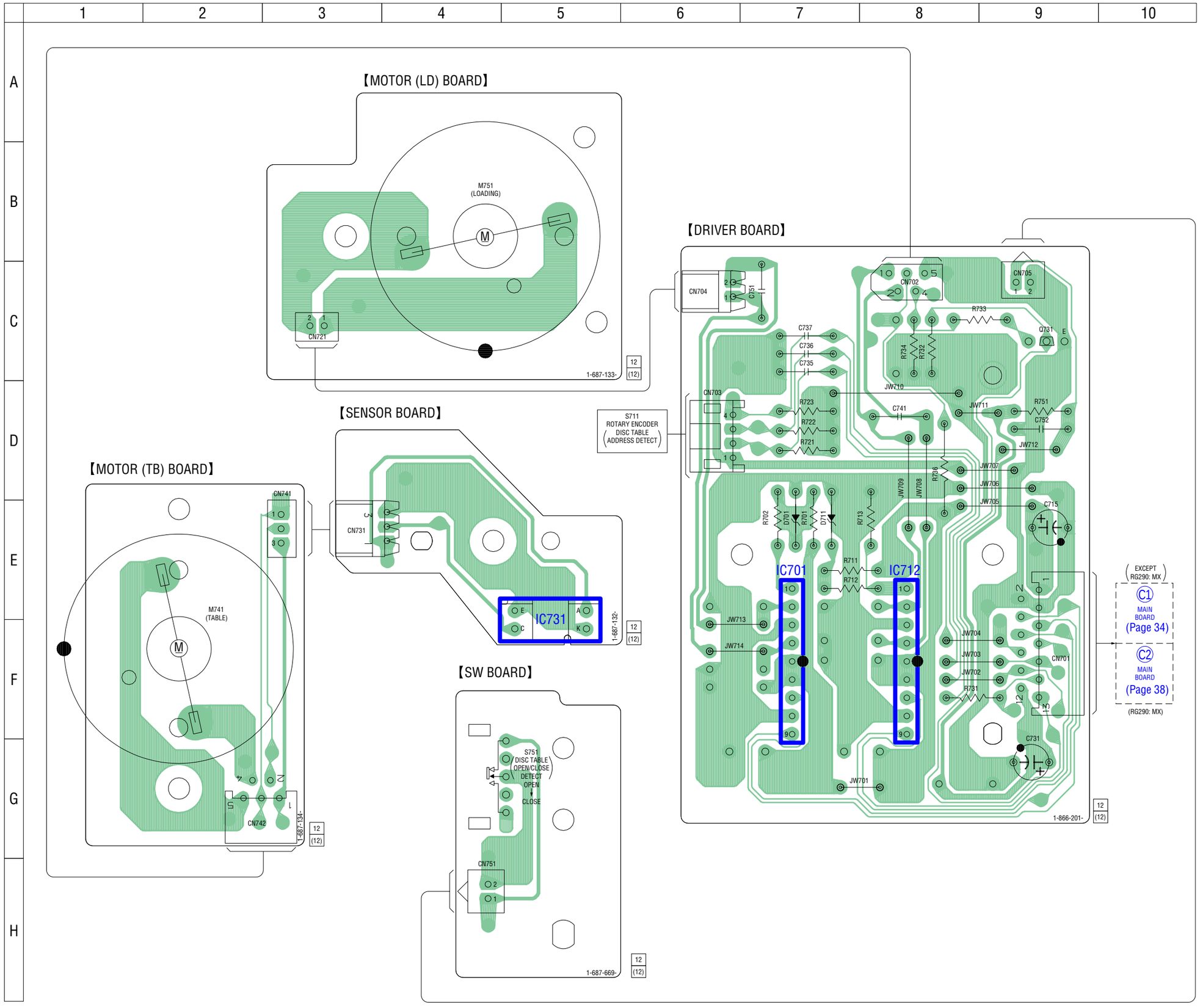

7-10. SCHEMATIC DIAGRAM – CHANGER Section –

• See page 58 for IC Block Diagrams.

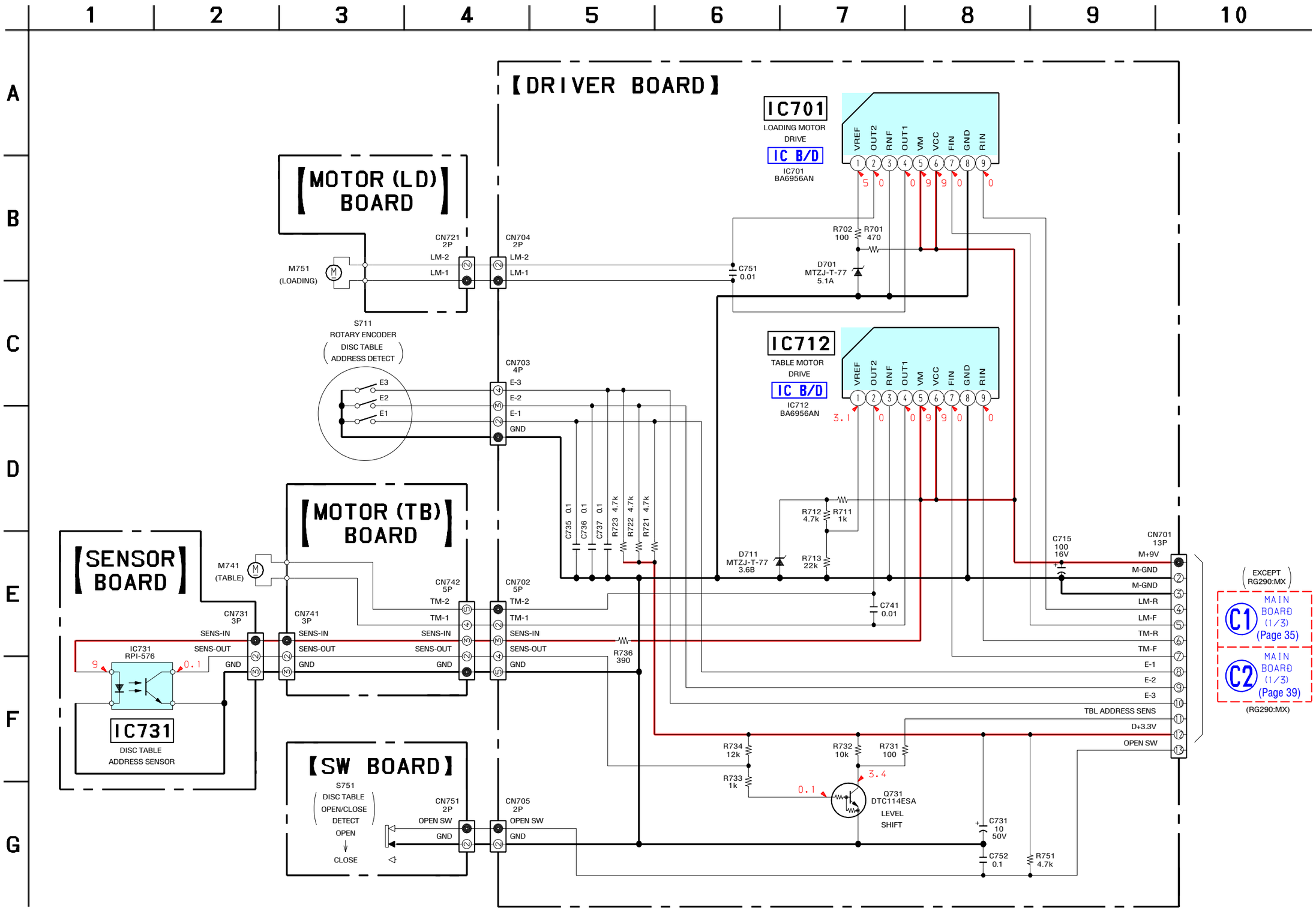

- **Semiconductor Location**

Ref. No.	Location
D301	B-3
D401	C-6
IC301	C-2
IC401	C-5
Q301	D-2
Q302	D-2
Q303	D-3
Q304	D-3
Q305	D-3
Q306	D-3
Q400	C-4
Q401	D-5
Q402	D-5
Q403	D-5
Q404	D-5
Q405	B-1
Q406	B-1
Q407	D-4
Q408	B-2
Q409	B-3
Q410	B-4
Q451	C-7
Q452	B-7
Q453	D-7

7-11. PRINTED WIRING BOARD – DECK Board –

• See page 25 for Circuit Boards Location.

: Uses unleaded solder.

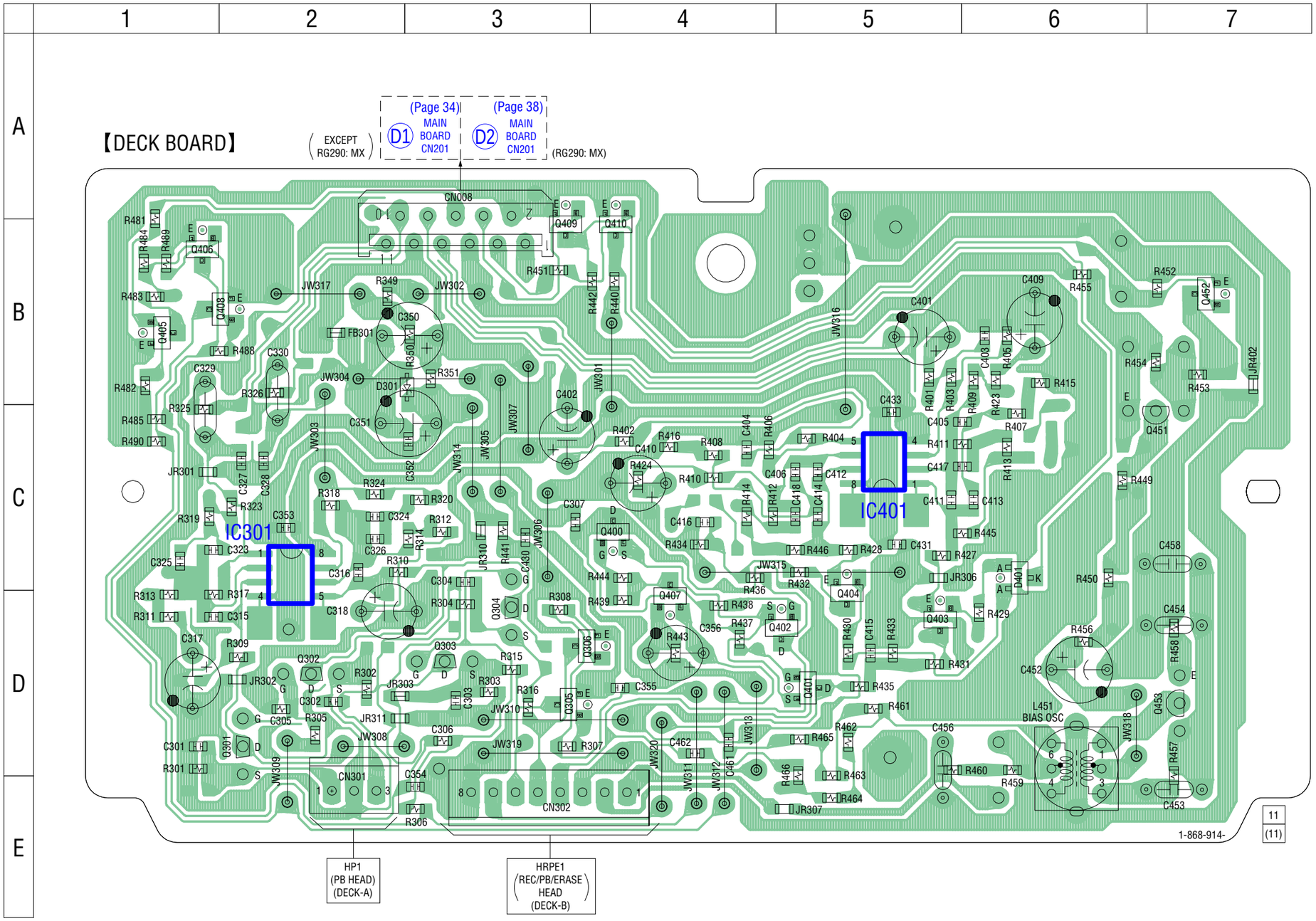

7-12. SCHEMATIC DIAGRAM – DECK Board –

• See page 53 for Waveforms.

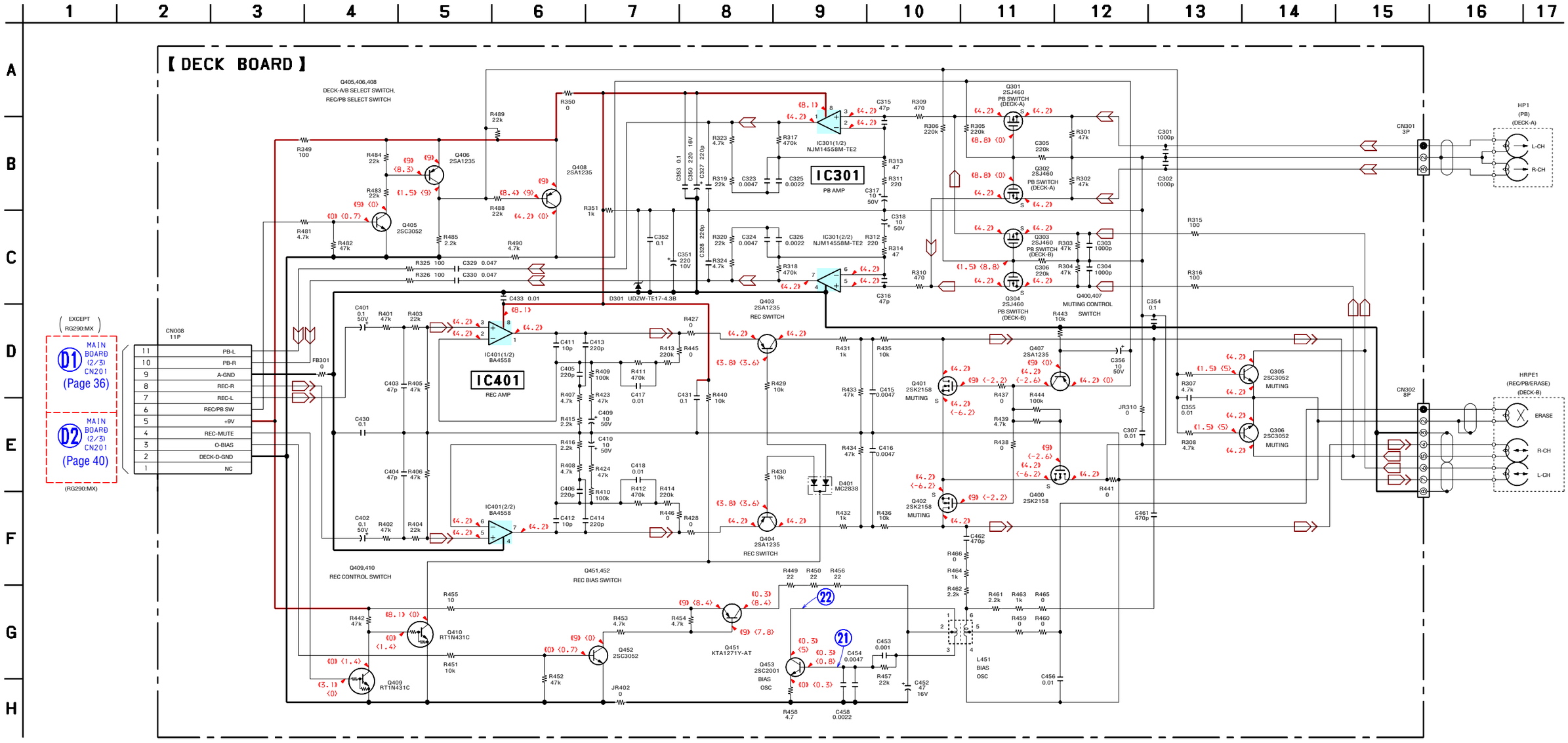

7-13. PRINTED WIRING BOARD – MAIN Board (Except RG290: MX model) –

• See page 25 for Circuit Boards Location. : Uses unleaded solder.

- **Semiconductor Location**

Ref. No.	Location
D001	F-8
D002	F-8
D003	F-8
D004	F-8
D006	G-9
D007	H-9
D008	E-7
D009	H-9
D011	G-7
D012	H-7
D013	G-7
D014	G-7
D021	G-6
D022	G-6
D023	G-6
D024	G-7
D031	J-7
D035	J-8
D036	G-9
D301	D-3
D302	D-4
D901	E-3
D902	E-3
D905	E-3
D910	D-3
D921	F-2
D923	F-2
D943	G-2
D947	F-2
IC006	E-7
IC011	F-7
IC021	G-7
IC101	I-3
IC251	I-7
IC901	C-2
IC902	E-3
Q002	G-9
Q011	H-9
Q041	H-9
Q042	H-9
Q043	G-9
Q044	G-9
Q045	G-9
Q046	F-9
Q111	G-2
Q112	G-2
Q113	H-4
Q114	H-4
Q251	J-7
Q252	I-7
Q261	J-9
Q901	D-3
Q902	D-2
Q903	E-3
Q904	E-3

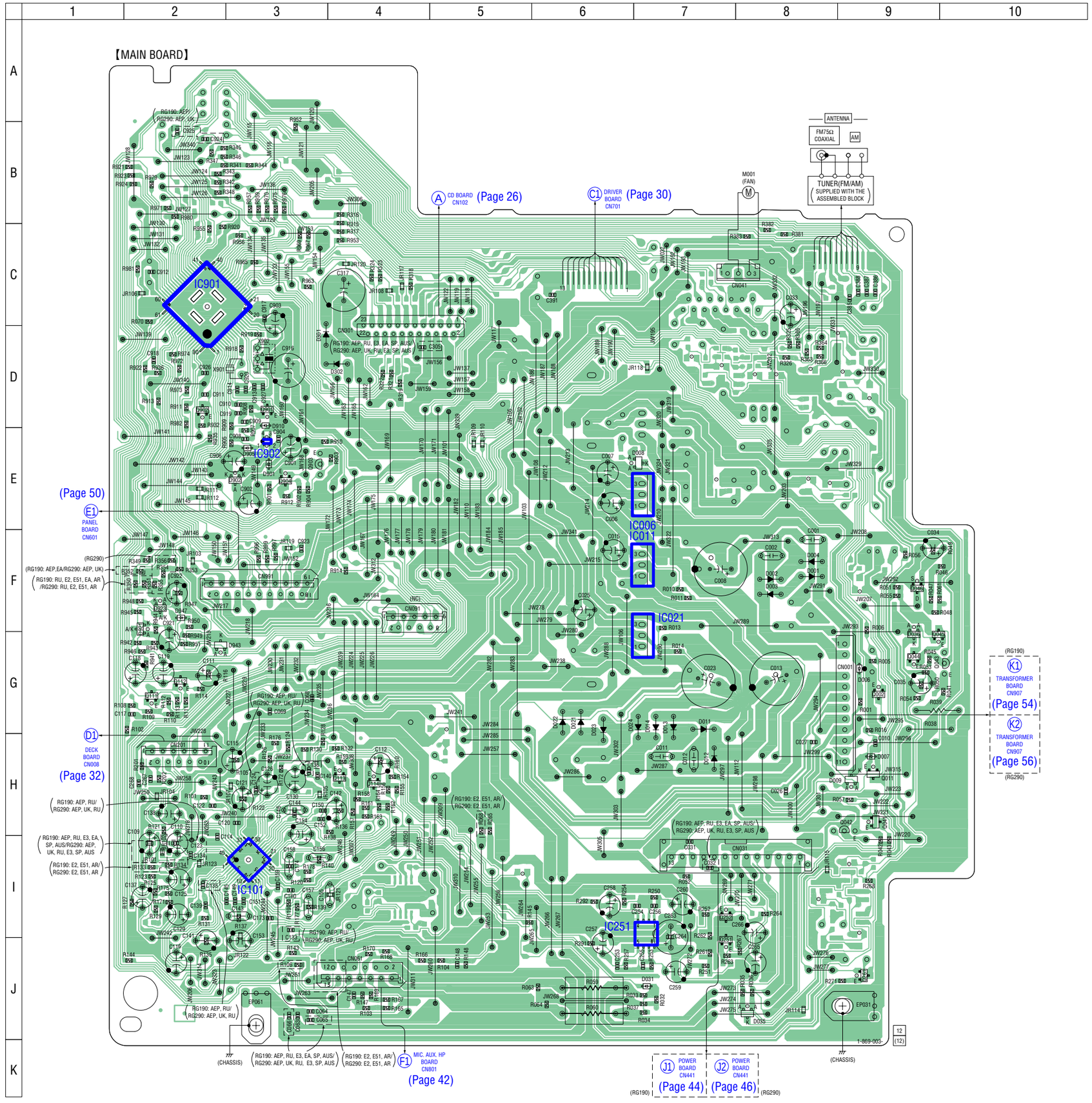

7-14. SCHEMATIC DIAGRAM – MAIN Board (1/3) (Except RG290: MX model) –

• See page 53 for Waveforms. • See page 62 for IC Pin Function Description.

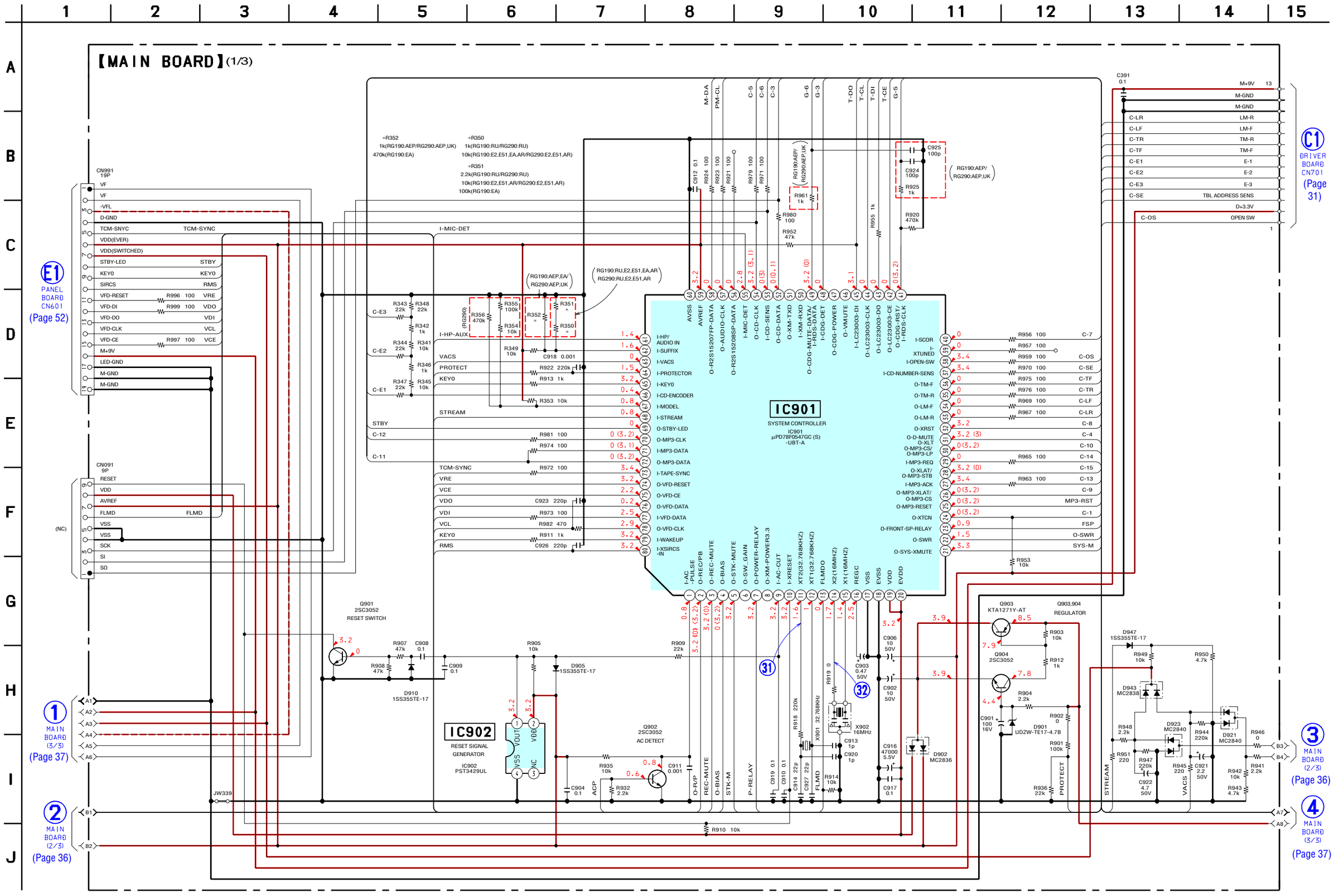

7-15. SCHEMATIC DIAGRAM – MAIN Board (2/3) (Except RG290: MX model) –

• See page 58 for IC Block Diagrams.

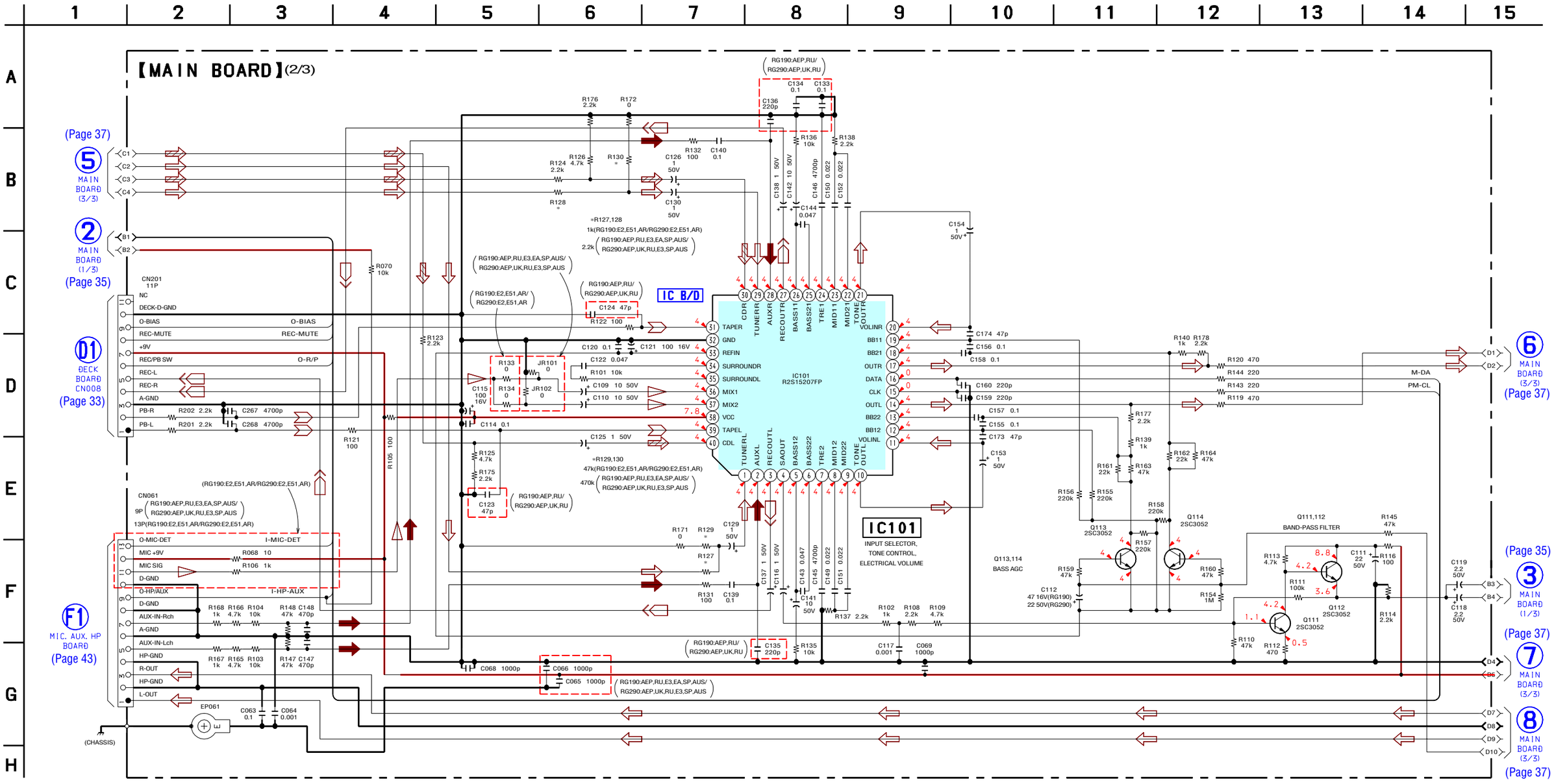

7-16. SCHEMATIC DIAGRAM – MAIN Board (3/3) (Except RG290: MX model) –

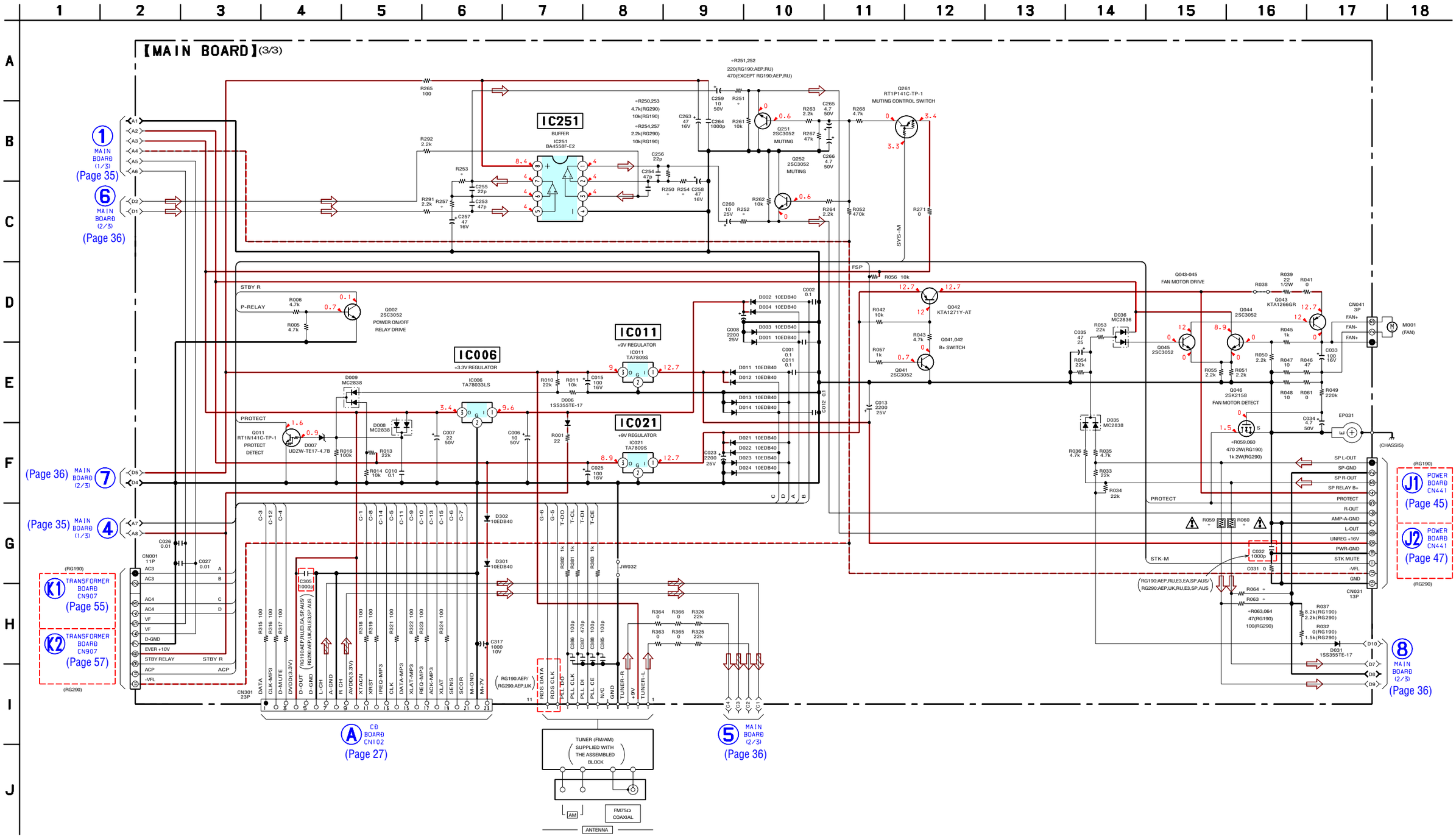

- **Semiconductor Location**

Ref. No.	Location
D001	F-8
D002	F-8
D003	F-8
D004	F-8
D006	G-9
D007	H-9
D008	E-6
D009	H-8
D011	G-7
D012	H-7
D013	G-7
D014	G-7
D021	G-6
D022	G-6
D023	G-6
D024	G-6
D031	J-6
D035	J-7
D036	G-9
D301	C-3
D302	C-3
D303	D-4
D901	E-3
D902	E-2
D905	E-3
D910	D-3
D921	F-1
D923	F-2
D943	G-2
D947	F-2
IC006	E-6
IC011	F-6
IC021	G-6
IC101	I-3
IC251	I-6
IC901	C-2
IC902	E-3
Q002	G-9
Q011	H-9
Q041	H-9
Q042	H-8
Q043	G-9
Q044	G-9
Q045	G-9
Q046	F-9
Q111	G-2
Q112	G-2
Q113	H-3
Q114	H-4
Q251	I-7
Q252	I-7
Q261	J-9
Q901	D-3
Q902	D-2
Q903	E-3
Q904	E-3

7-17. PRINTED WIRING BOARD – MAIN Board (RG290: MX model) –

• See page 25 for Circuit Boards Location.

: Uses unleaded solder.

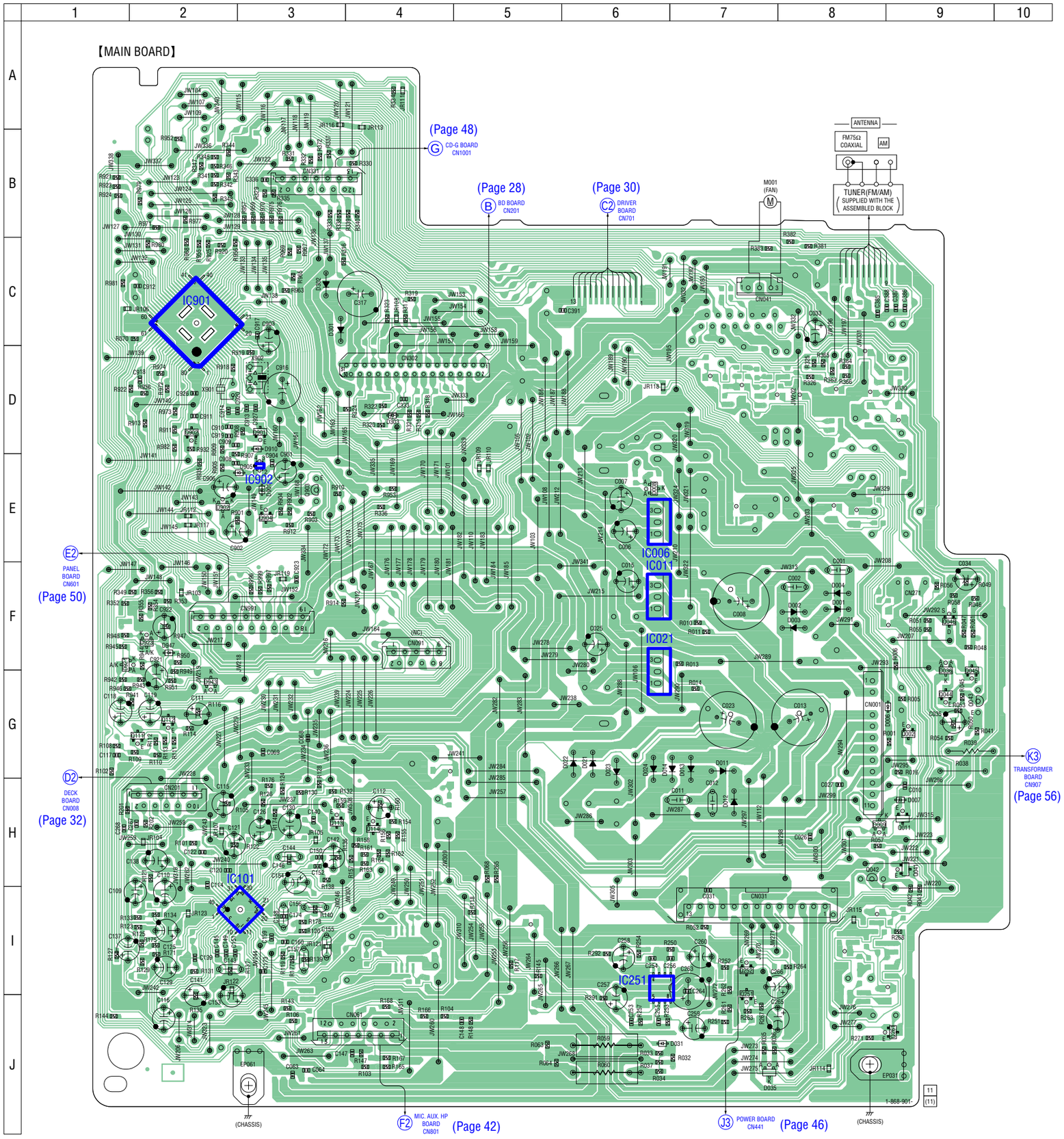

7-18. SCHEMATIC DIAGRAM – MAIN Board (1/3) (RG290: MX model) –

• See page 53 for Waveforms. • See page 62 for IC Pin Function Description.

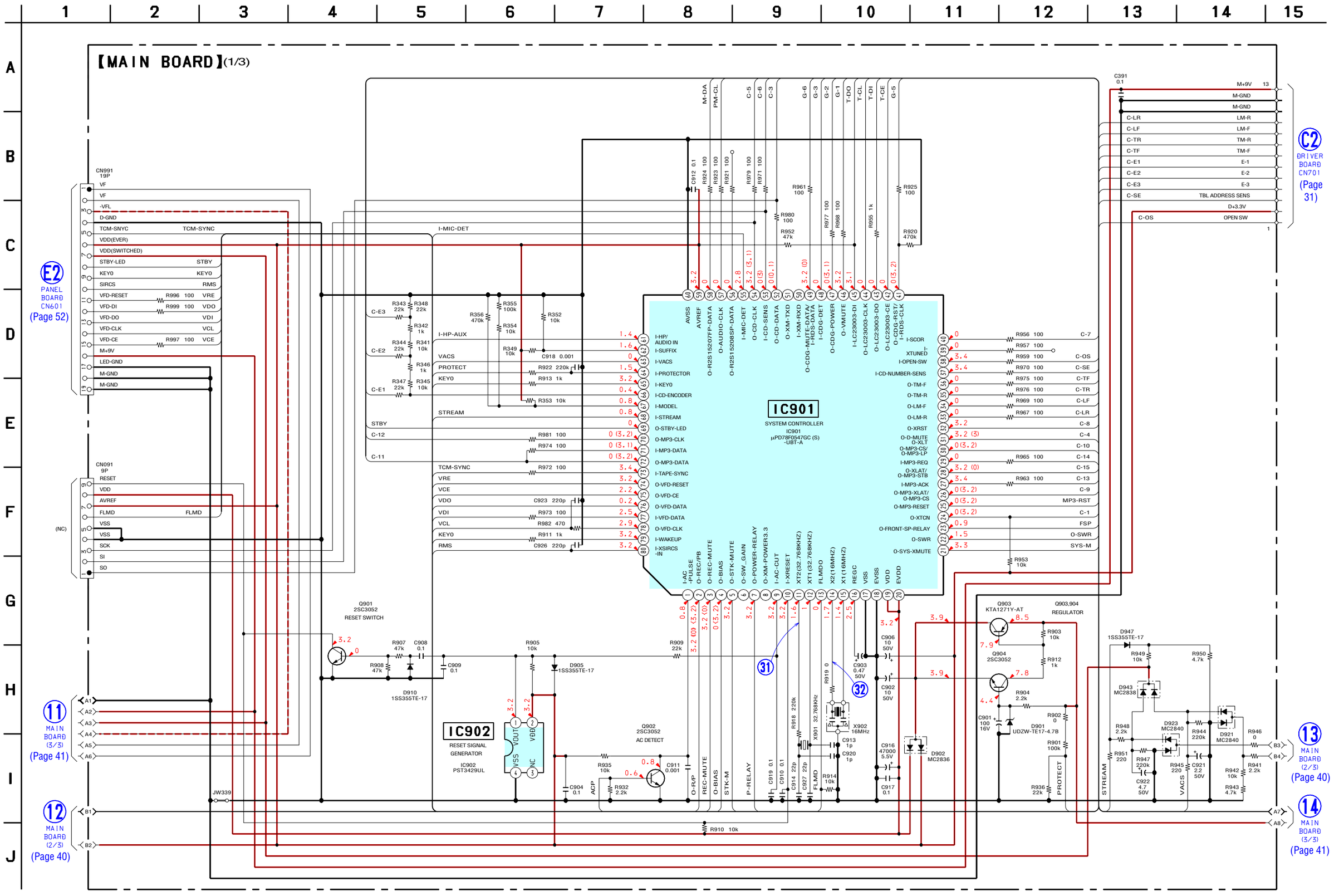

7-19. SCHEMATIC DIAGRAM – MAIN Board (2/3) (RG290: MX model) –

• See page 58 for IC Block Diagrams.

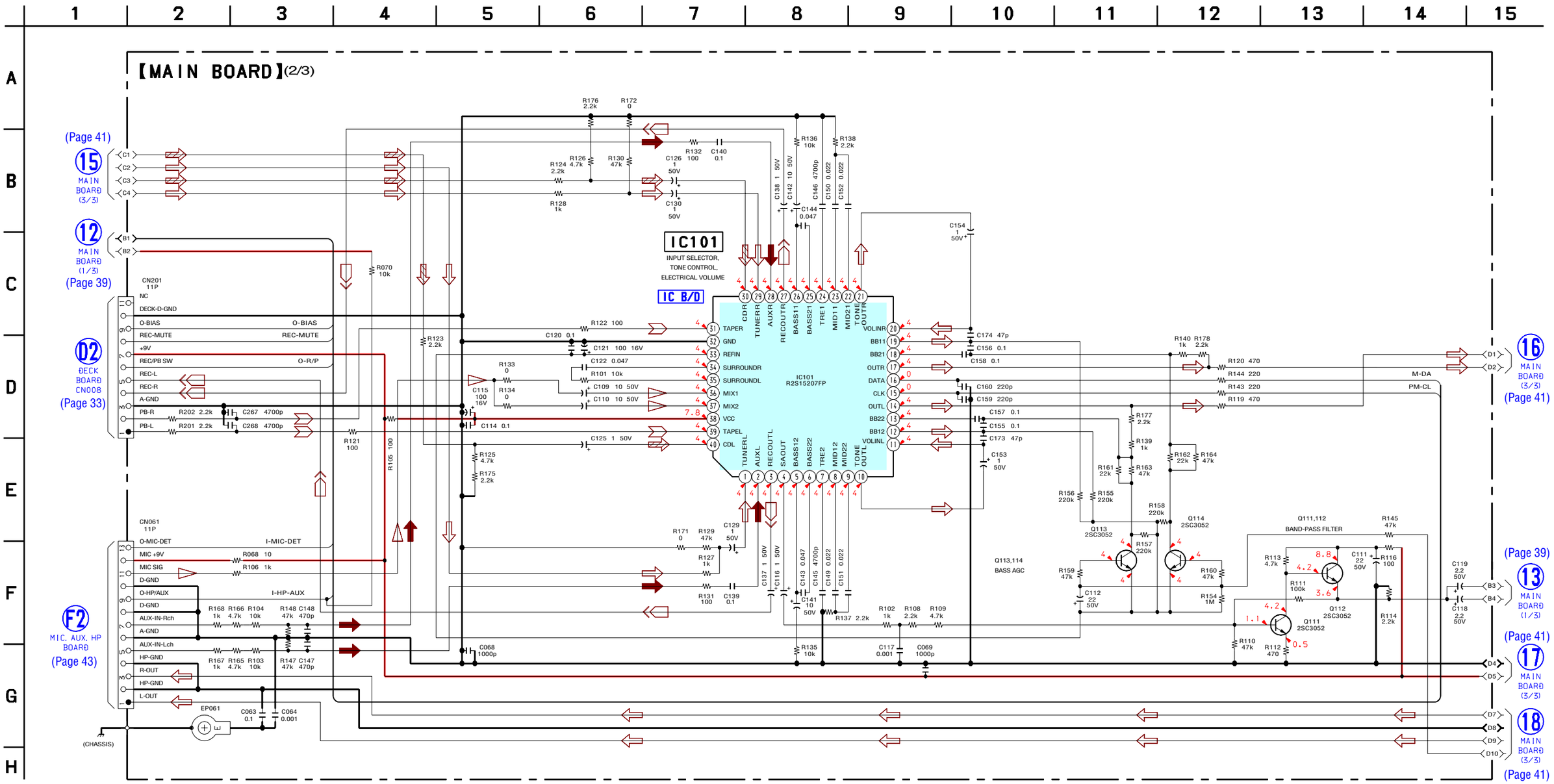

7-20. SCHEMATIC DIAGRAM – MAIN Board (3/3) (RG290: MX model) –

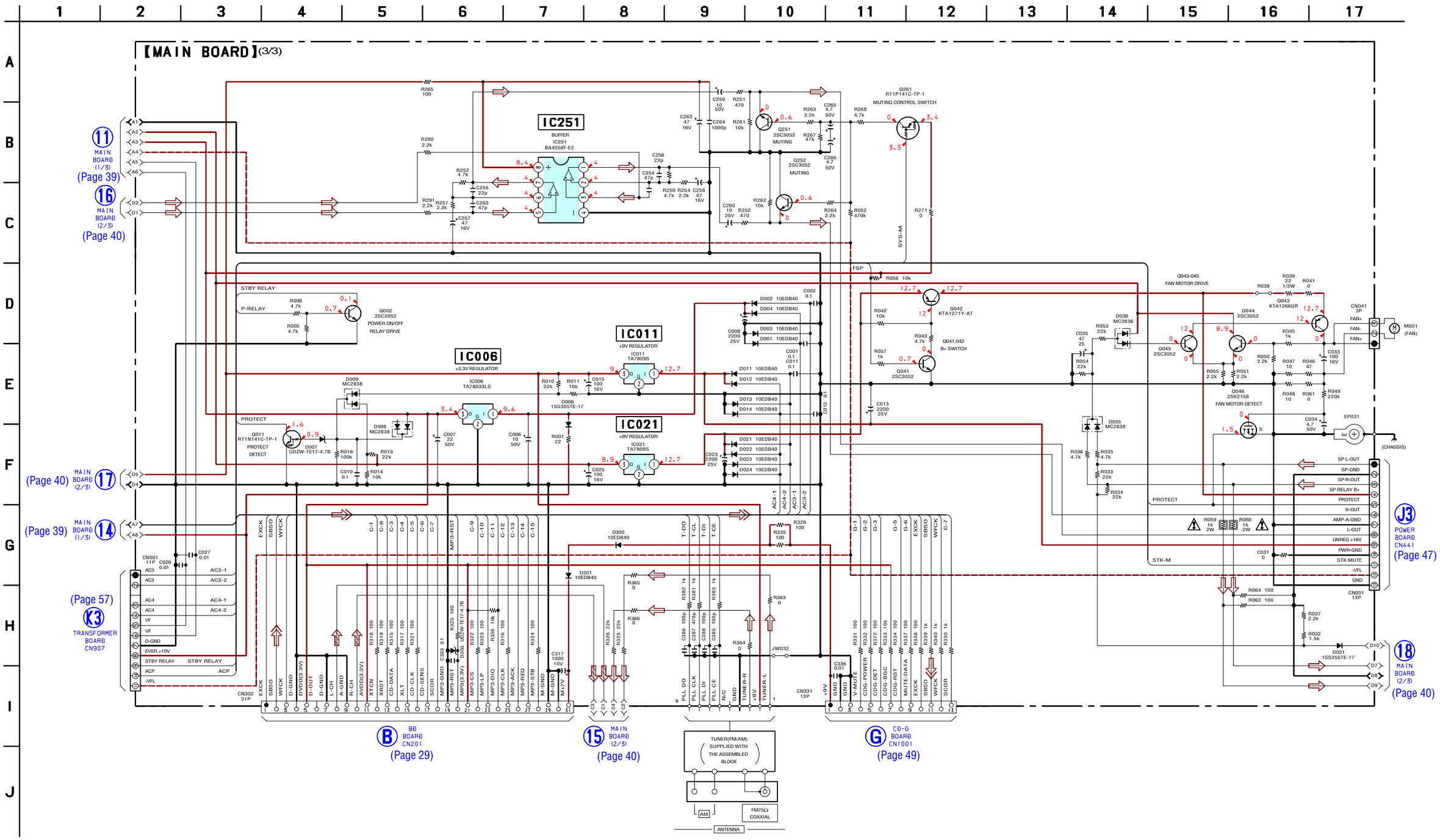

7-21. PRINTED WIRING BOARD – MIC. AUX. HP Board –

• See page 25 for Circuit Boards Location. : Uses unleaded solder.

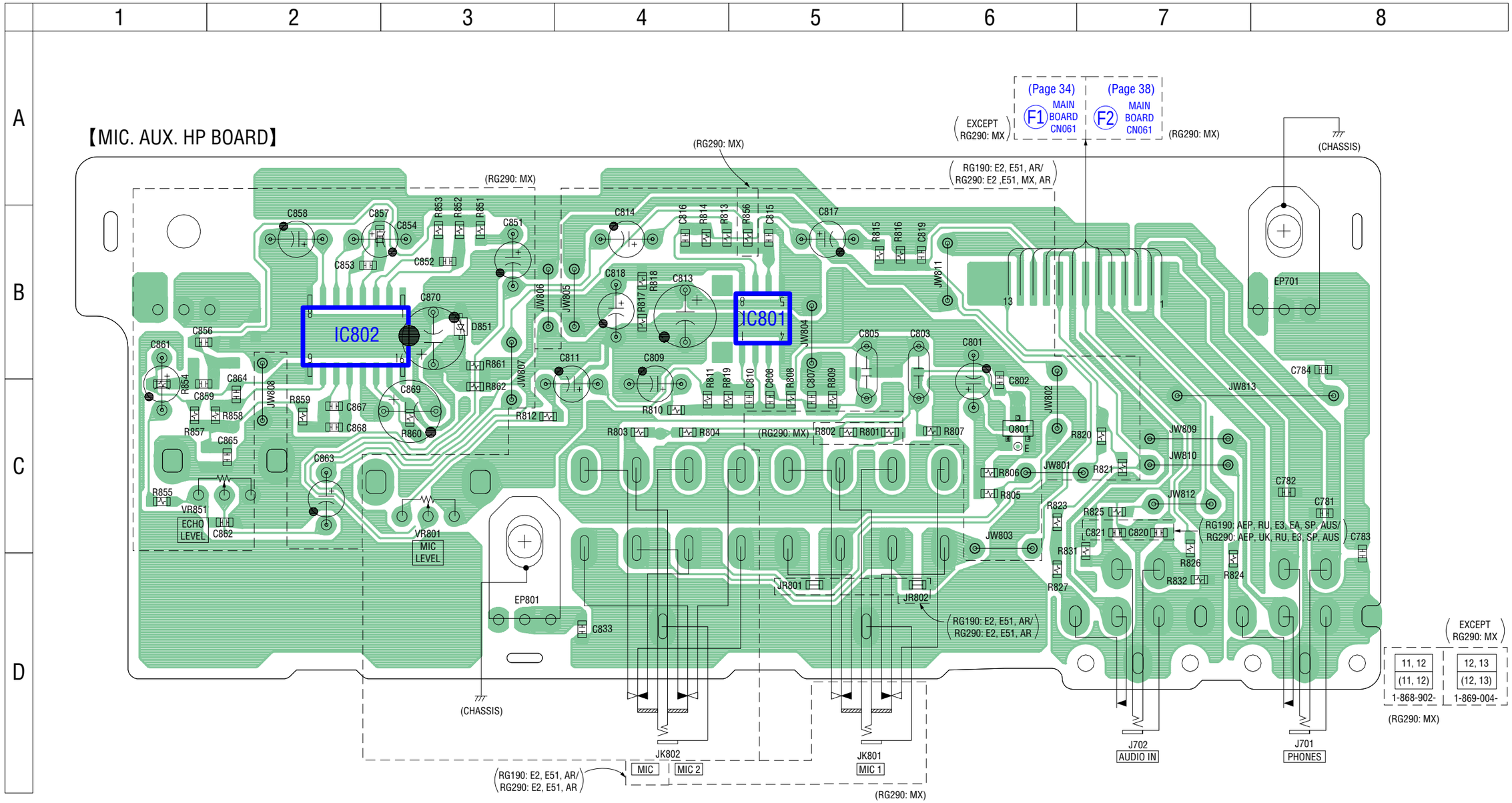

7-22. SCHEMATIC DIAGRAM – MIC. AUX. HP Board –

• See page 58 for IC Block Diagrams.

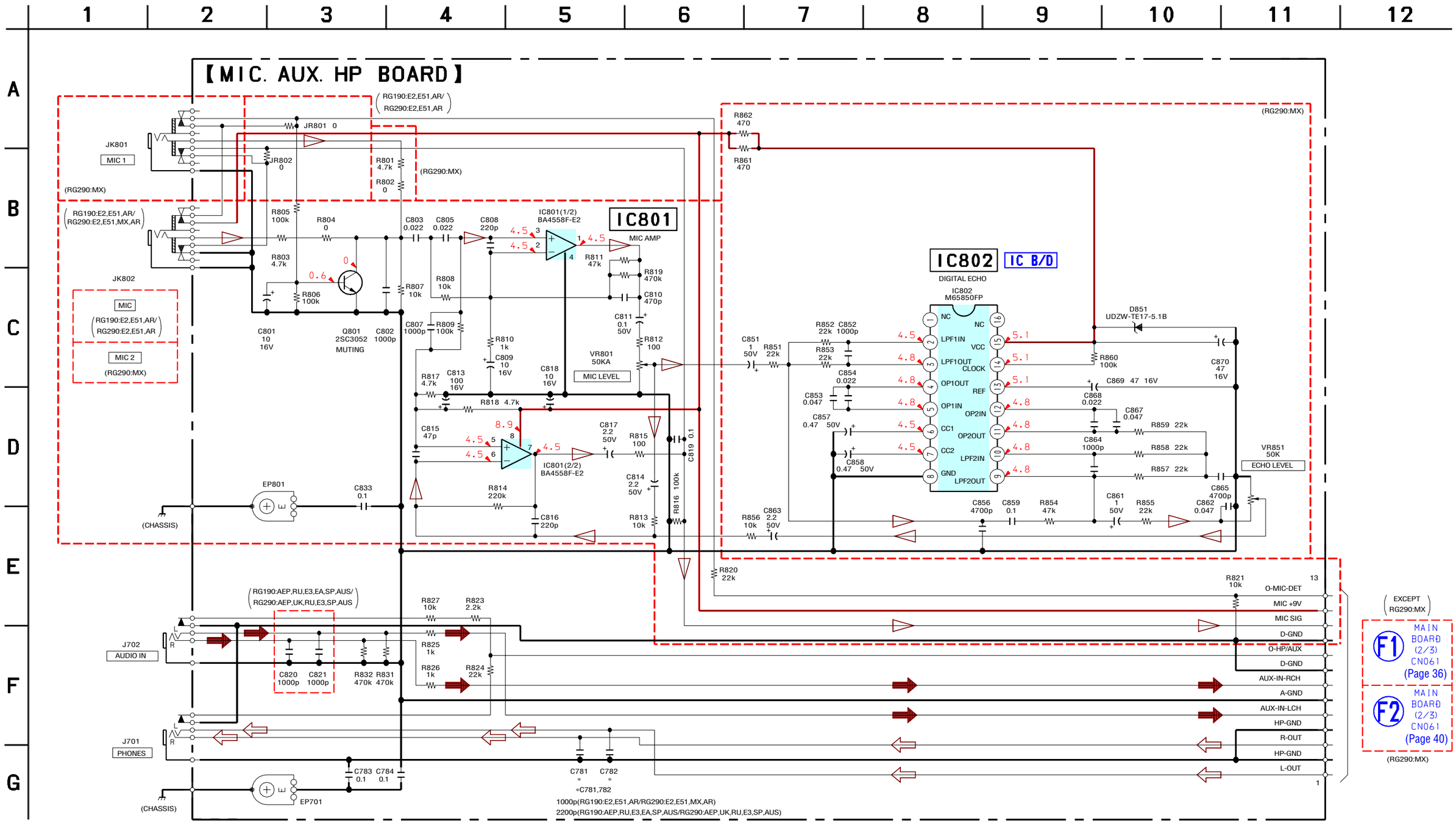

7-23. PRINTED WIRING BOARD – POWER Board (RG190) –

• See page 25 for Circuit Boards Location. : Uses unleaded solder.

• **Semiconductor Location**

Ref. No.	Location
D401	C-10
D441	F-7
D443	G-12
D481	F-7
D483	F-2
IC441	G-5
Q441	F-7
Q442	F-6
Q481	D-4
Q482	D-4
Q483	D-3
Q484	E-2
Q485	E-3
Q486	E-2
Q487	E-3
Q488	F-2
Q489	G-3

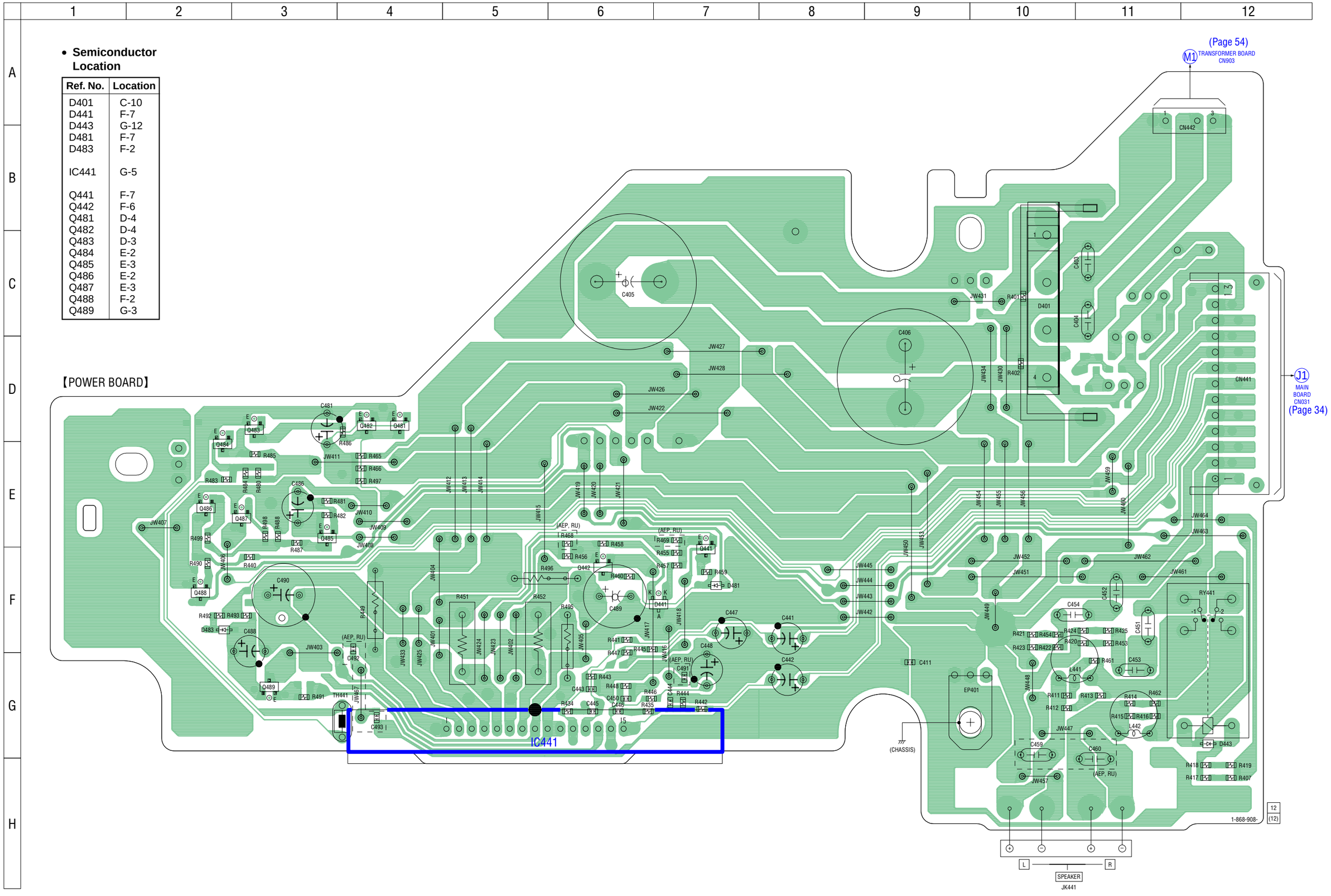

7-24. SCHEMATIC DIAGRAM – POWER Board (RG190) –

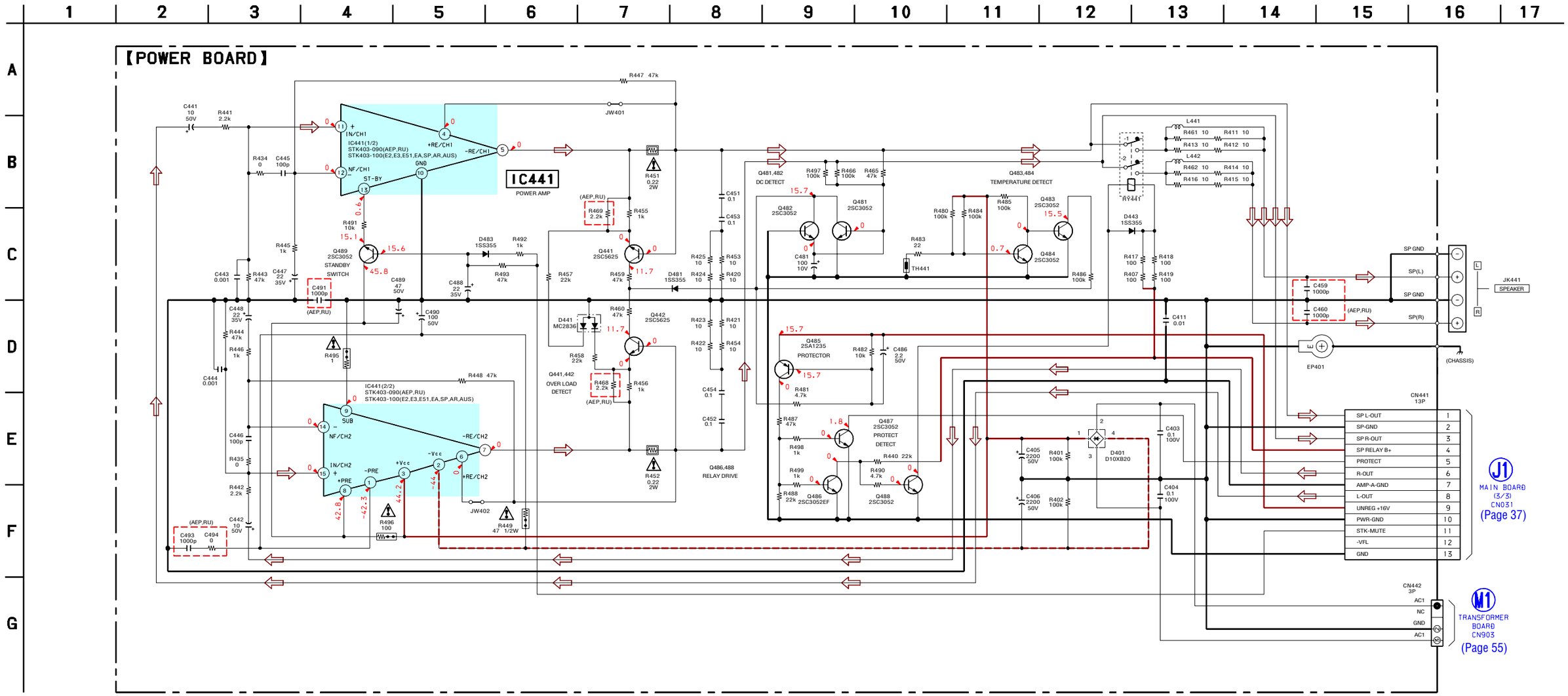

7-25. PRINTED WIRING BOARD – POWER Board (RG290) –

• See page 25 for Circuit Boards Location. : Uses unleaded solder.

• **Semiconductor Location**

Ref. No.	Location
D401	C-10
D441	F-7
D443	G-12
D481	F-7
D483	F-2
IC441	G-5
Q441	F-7
Q442	F-6
Q481	D-4
Q482	D-4
Q483	D-3
Q484	E-2
Q485	E-3
Q486	E-2
Q487	E-3
Q488	F-2
Q489	G-3

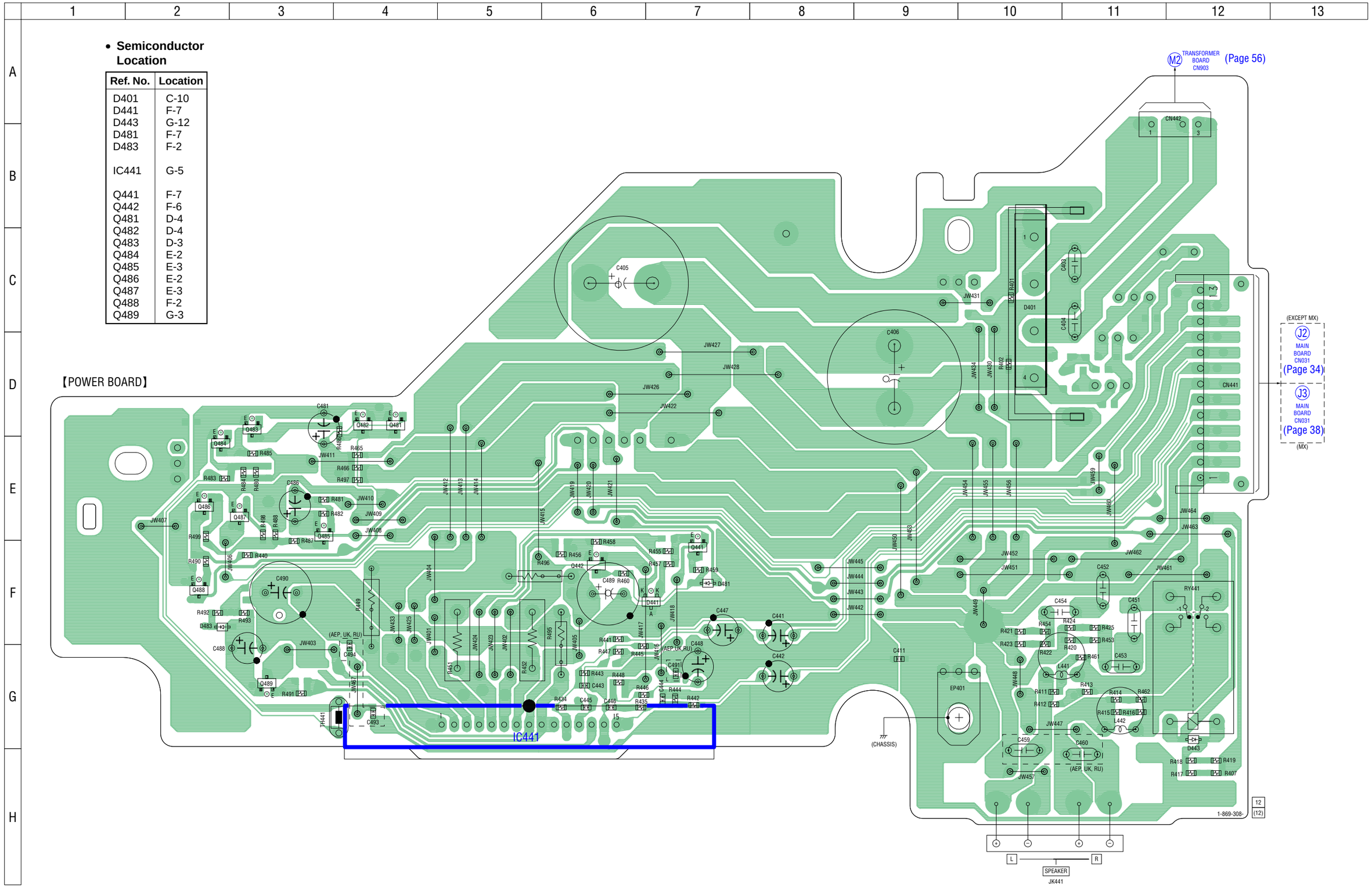

7-26. SCHEMATIC DIAGRAM – POWER Board (RG290) –

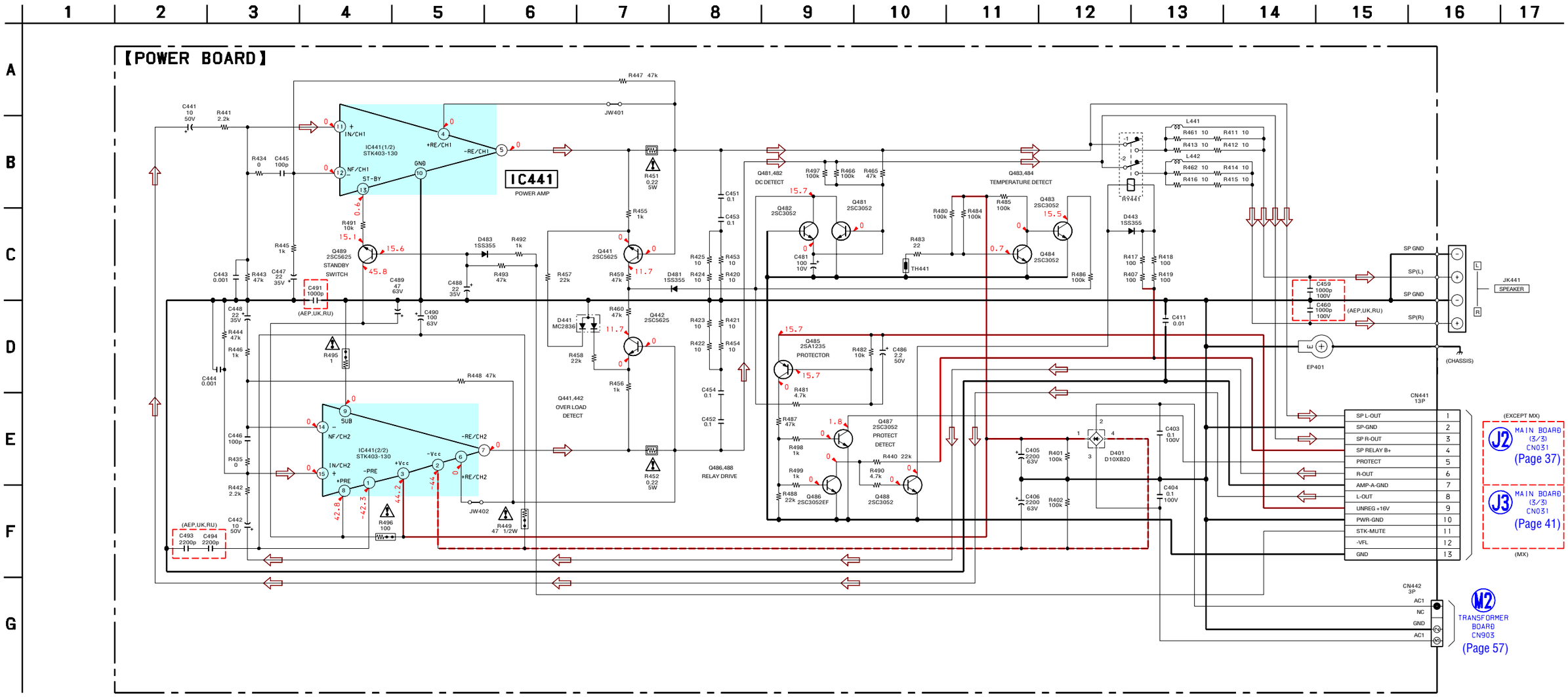

7-27. PRINTED WIRING BOARDS – CD-G Section (RG290: MX model) –

• See page 25 for Circuit Boards Location. : Uses unleaded solder.

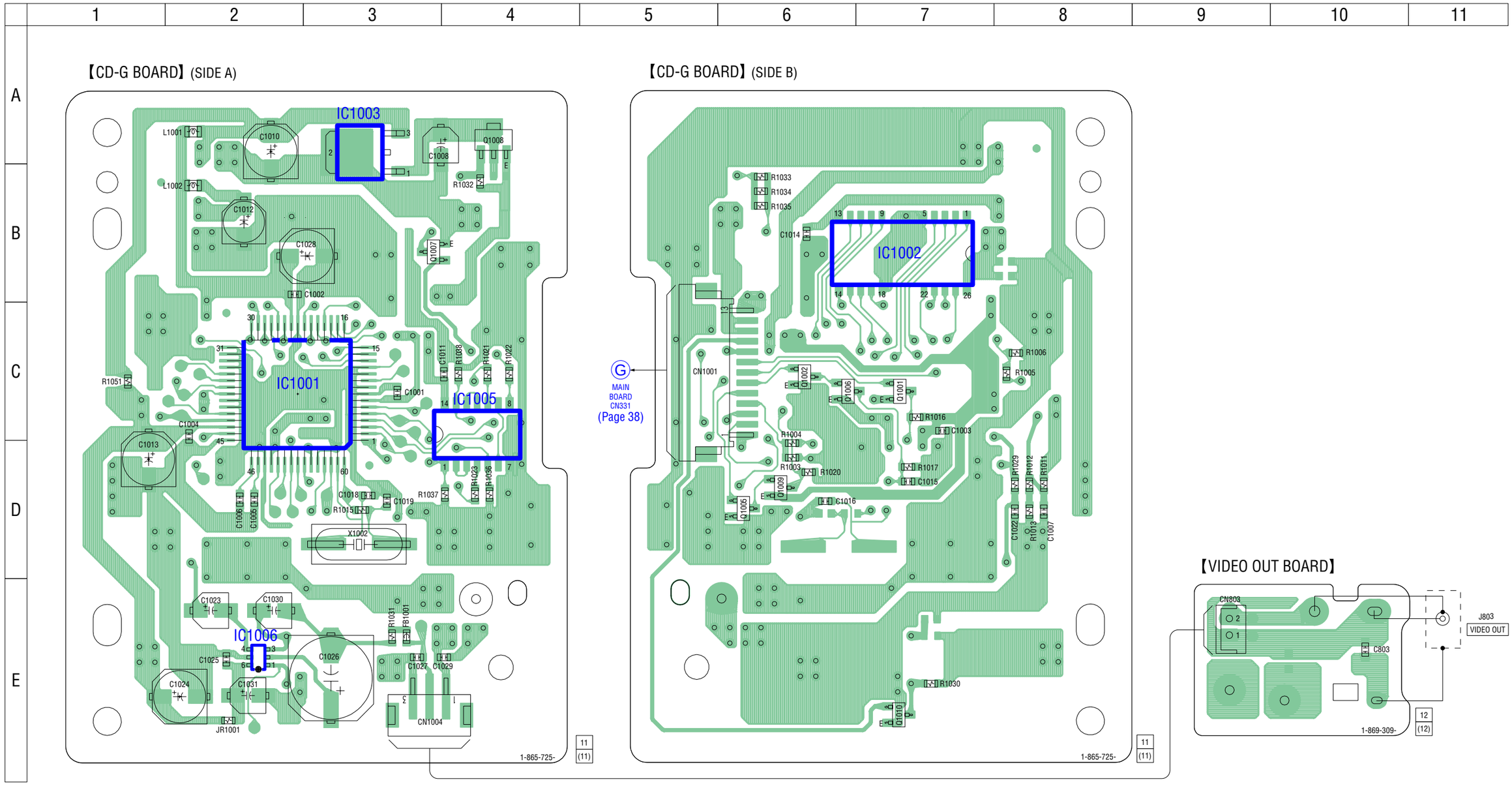

• **Semiconductor Location**

Ref. No.	Location
IC1001	C-2
IC1002	B-7
IC1003	A-3
IC1005	C-4
IC1006	E-2
Q1001	C-7
Q1002	C-6
Q1005	D-6
Q1006	C-6
Q1007	B-3
Q1008	A-4
Q1009	D-6
Q1010	E-7

7-28. SCHEMATIC DIAGRAM – CD-G Section (RG290: MX model) –

• See page 53 for Waveforms. • See page 58 for IC Block Diagrams. • See page 62 for IC Pin Function Description.

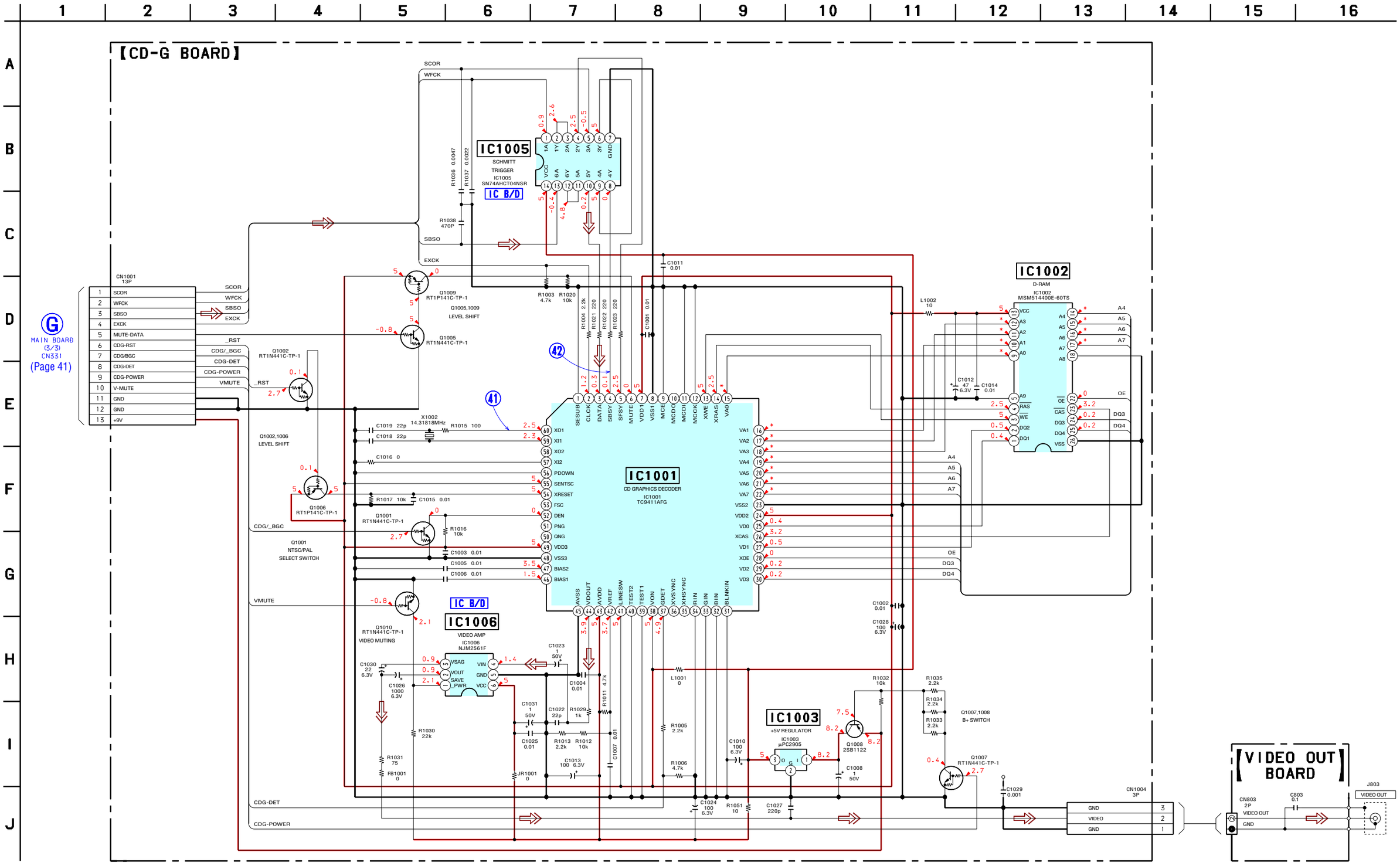

7-29. PRINTED WIRING BOARD – PANEL Board –

• See page 25 for Circuit Boards Location. : Uses unleaded solder.

- **Semiconductor Location**

Ref. No.	Location
D601	H-6
D602	F-7
D603	D-5
D604	F-4
D605	H-4
D711	H-6
IC610	B-1
IC701	D-8
Q601	G-6
Q602	F-7
Q603	D-4
Q604	E-3
Q605	H-5
Q701	F-3
Q702	H-5
Q703	H-6
Q704	G-3
Q705	H-7
Q706	G-8

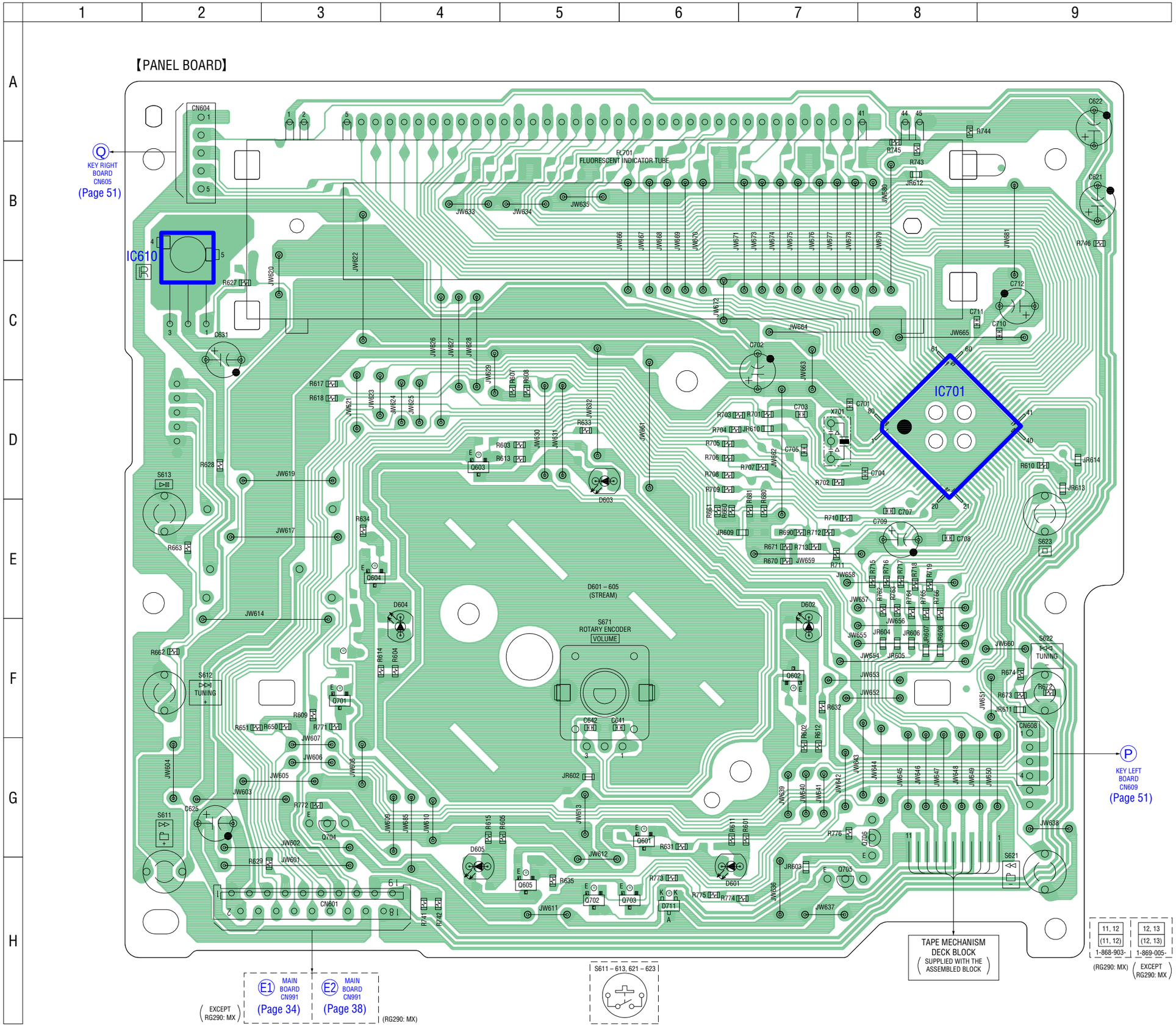

7-30. PRINTED WIRING BOARDS – KEY Section –

• See page 25 for Circuit Boards Location. : Uses unleaded solder.

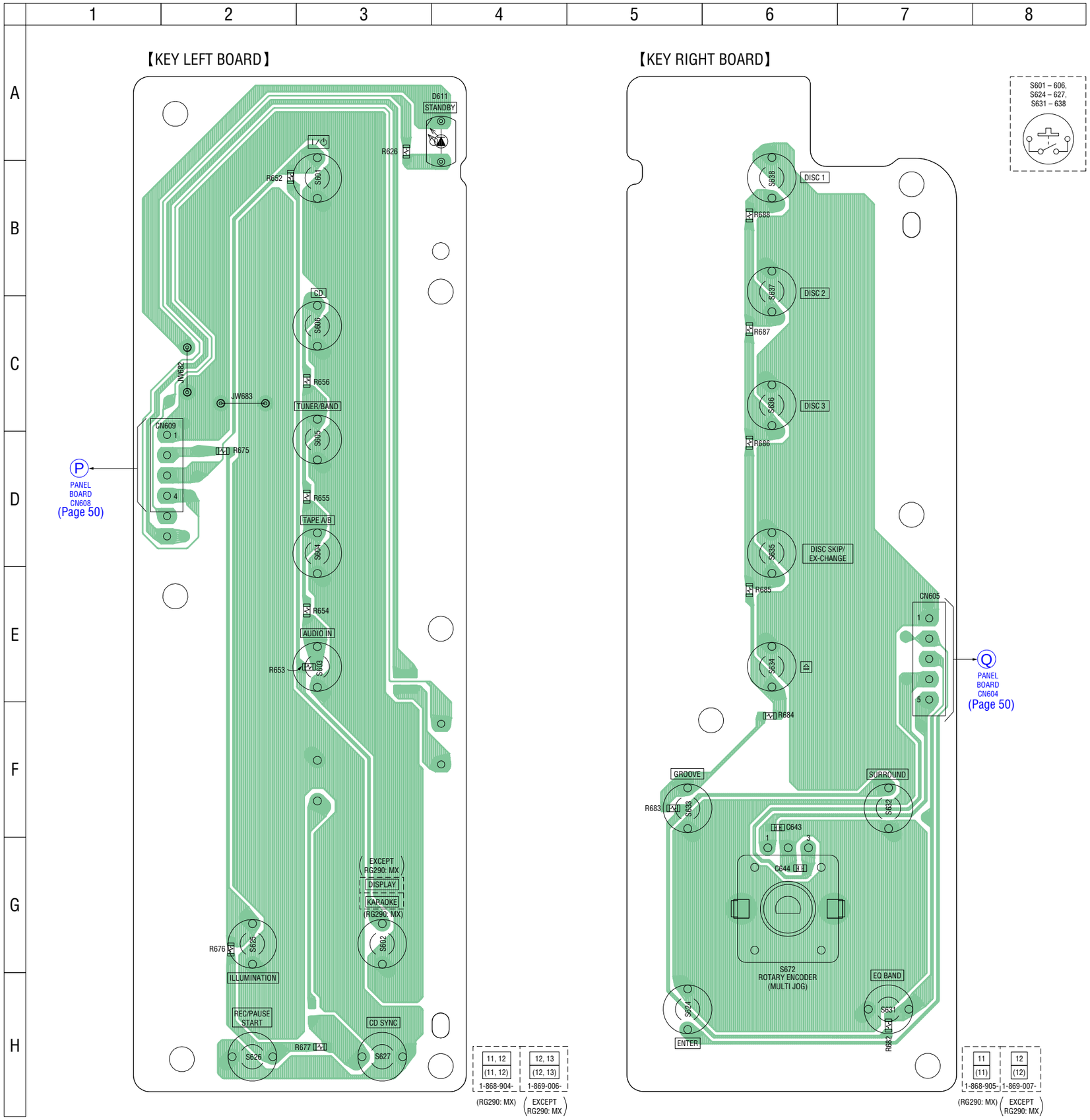

7-31. SCHEMATIC DIAGRAM – PANEL/KEY Section –

• See page 53 for Waveforms. • See page 62 for IC Pin Function Description.

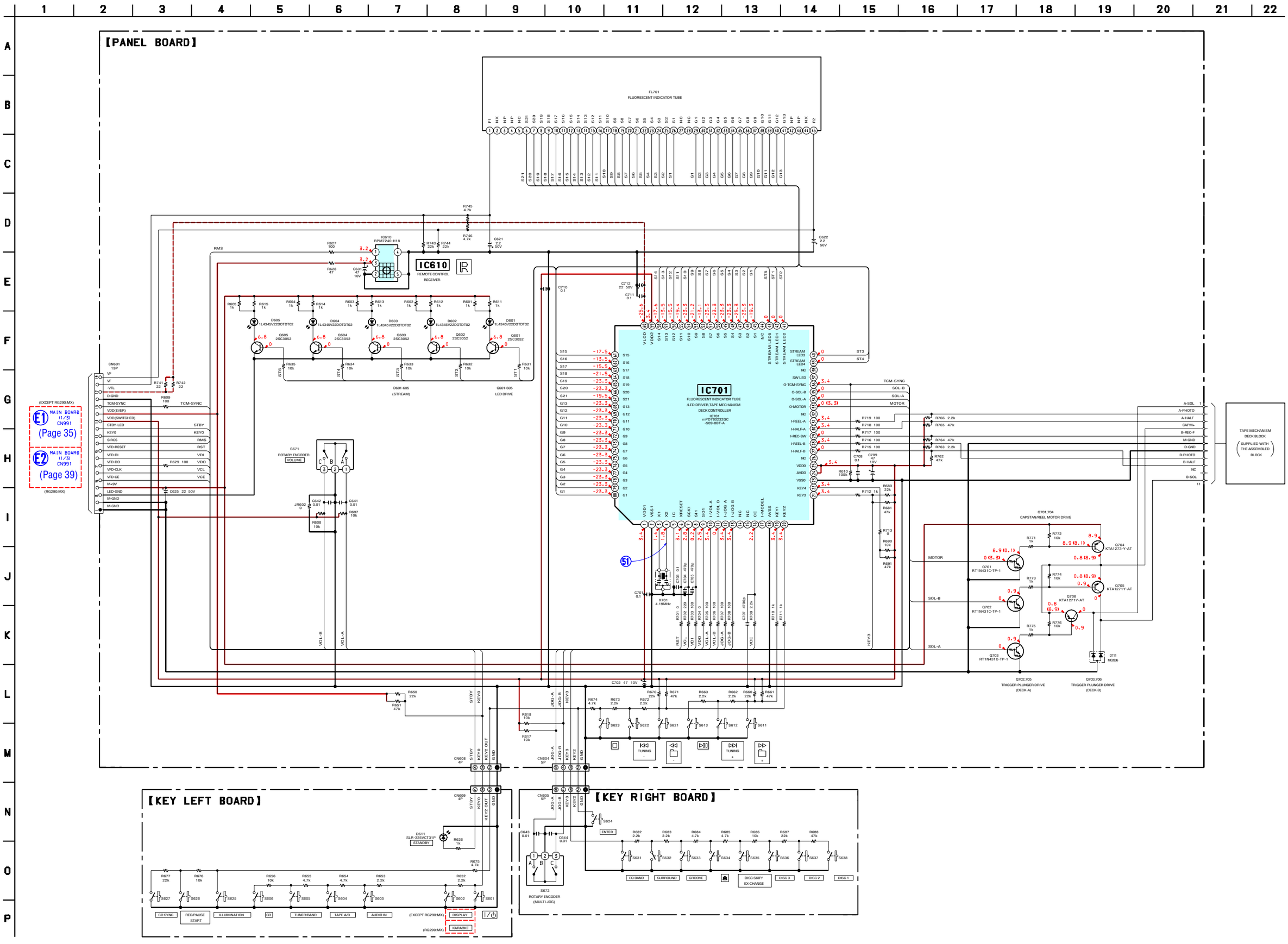

• **Waveforms**

– CD Board –

1 IC201 ① (LRCK), ② (LRCKI) (CD play mode)

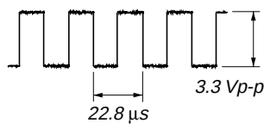

1 V/DIV, 10 µs/DIV

2 IC201 ⑤ (BCK), ⑥ (BCKI) (CD play mode)

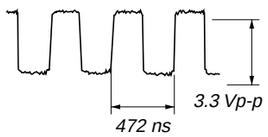

1 V/DIV, 200 ns/DIV

3 IC201 ⑦⓪ (RFACO) (CD play mode)

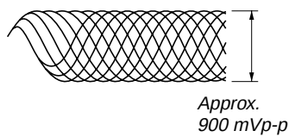

200 mV/DIV, 500 ns/DIV

4 IC201 ⑩⑧ (XTAO) (CD play mode)

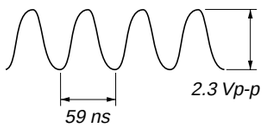

1 V/DIV, 20 ns/DIV

– BD Board –

11 IC101 ④① (RFACO) (CD play mode)

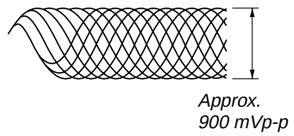

200 mV/DIV, 500 ns/DIV

12 IC101 ⑥② (LRCKI), ⑥③ (LRCK) (CD play mode)

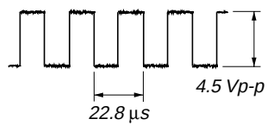

1 V/DIV, 10 µs/DIV

13 IC101 ⑥⓪ (BCKI), ⑥⑥ (BCK) (CD play mode)

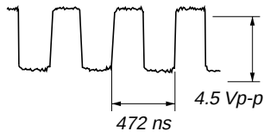

1 V/DIV, 200 ns/DIV

14 IC101 ⑦⑦ (XTAO) (CD play mode)

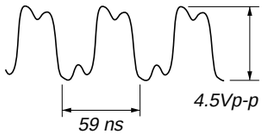

2 V/DIV, 20 ns/DIV

– DECK Board –

21 Q453 (Base) (REC mode)

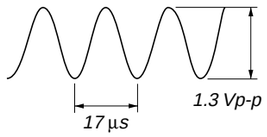

500 mV/DIV, 5 µs/DIV

22 Q453 (Collector) (REC mode)

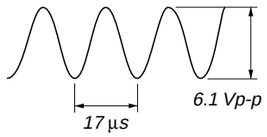

2 V/DIV, 5 µs/DIV

– MAIN Board –

31 IC901 ⑪ (XT2 (32.768KHZ))

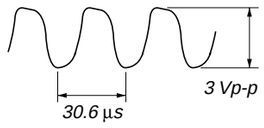

1 V/DIV, 10 µs/DIV

32 IC901 ⑭ (X2 (16MHZ))

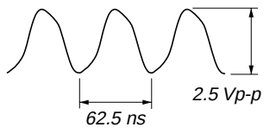

1 V/DIV, 20 ns/DIV

– CD-G Board –

41 IC1001 ⑥⓪ (XO1) (CD-G play mode)

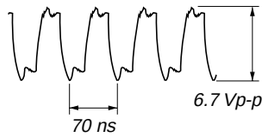

2 V/DIV, 50 ns/DIV

42 IC1001 ④ (SBSY) (CD-G play mode)

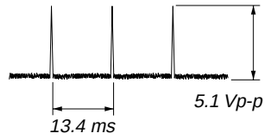

2 V/DIV, 5 ms/DIV

– PANEL Board –

51 IC701 ④ (X2)

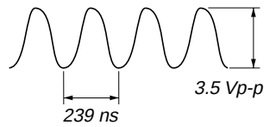

1 V/DIV, 100 ns/DIV

7-32. PRINTED WIRING BOARD – TRANSFORMER Board (RG190) –

• See page 25 for Circuit Boards Location. : Uses unleaded solder.

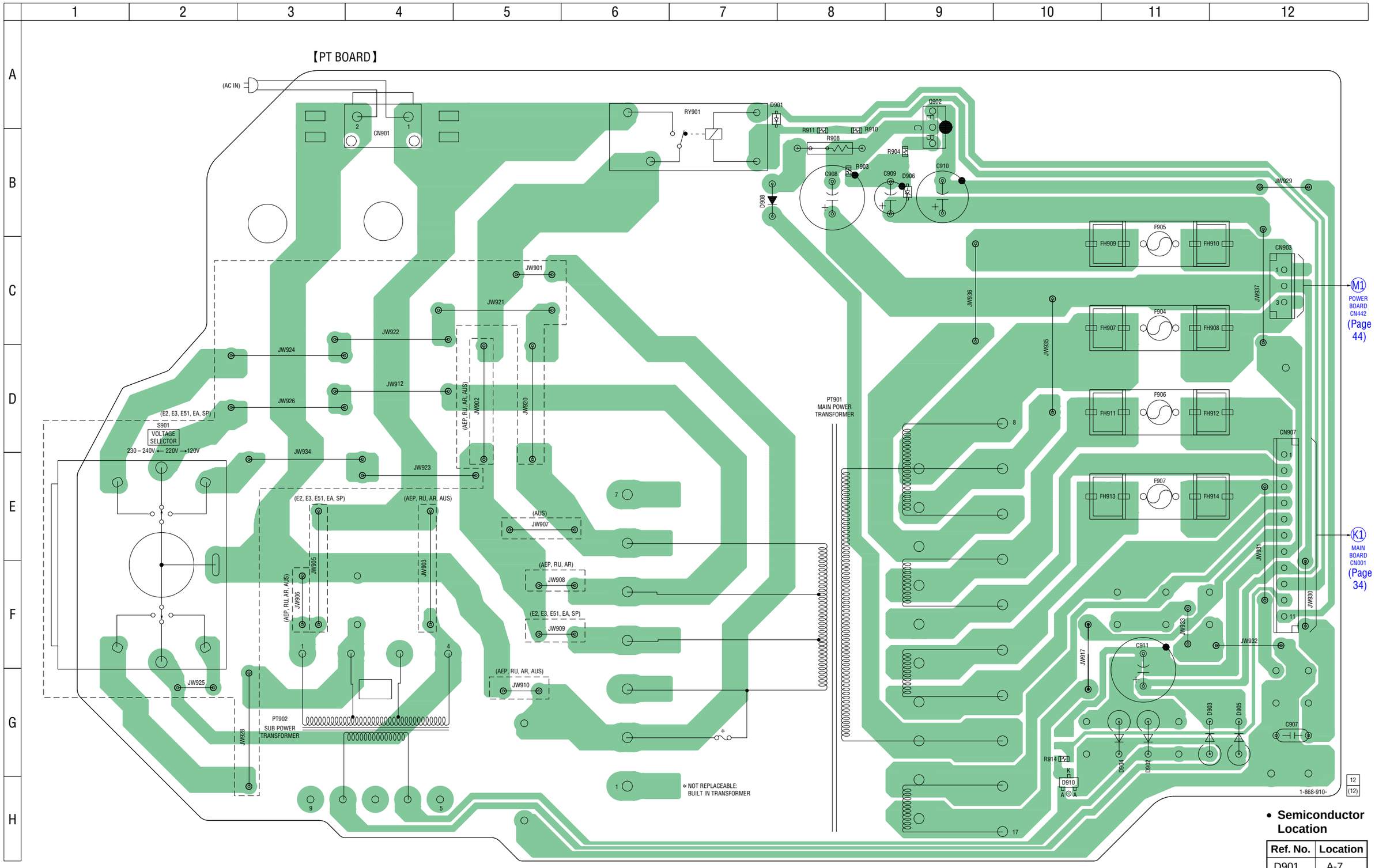

• **Semiconductor Location**

Ref. No.	Location
D901	A-7
D902	G-11
D903	G-12
D904	G-11
D905	G-12
D906	B-9
D908	B-7
D910	H-10
Q902	A-9

7-33. SCHEMATIC DIAGRAM – TRANSFORMER Board (RG190) –

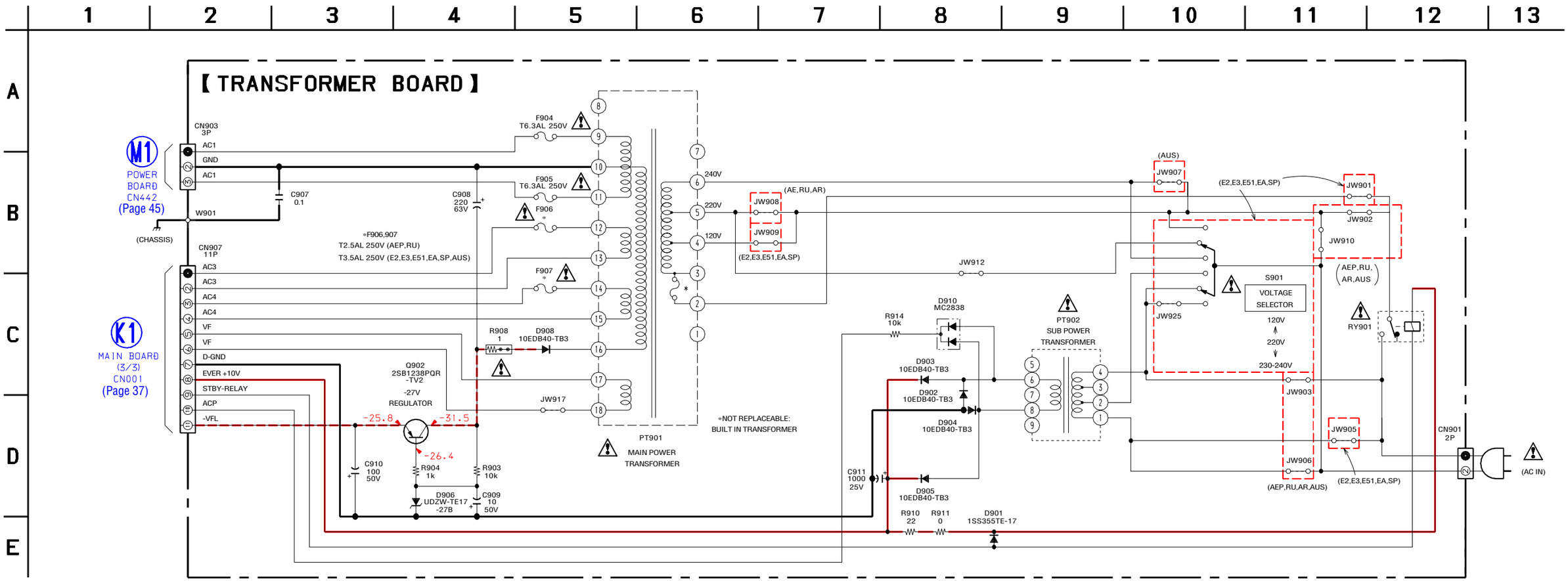

7-34. PRINTED WIRING BOARD – TRANSFORMER Board (RG290) –

• See page 25 for Circuit Boards Location. : Uses unleaded solder.

• **Semiconductor Location**

Ref. No.	Location
D901	A-8
D902	G-11
D903	G-11
D904	G-11
D905	G-12
D906	B-9
D908	B-8
D910	H-10
Q902	B-9

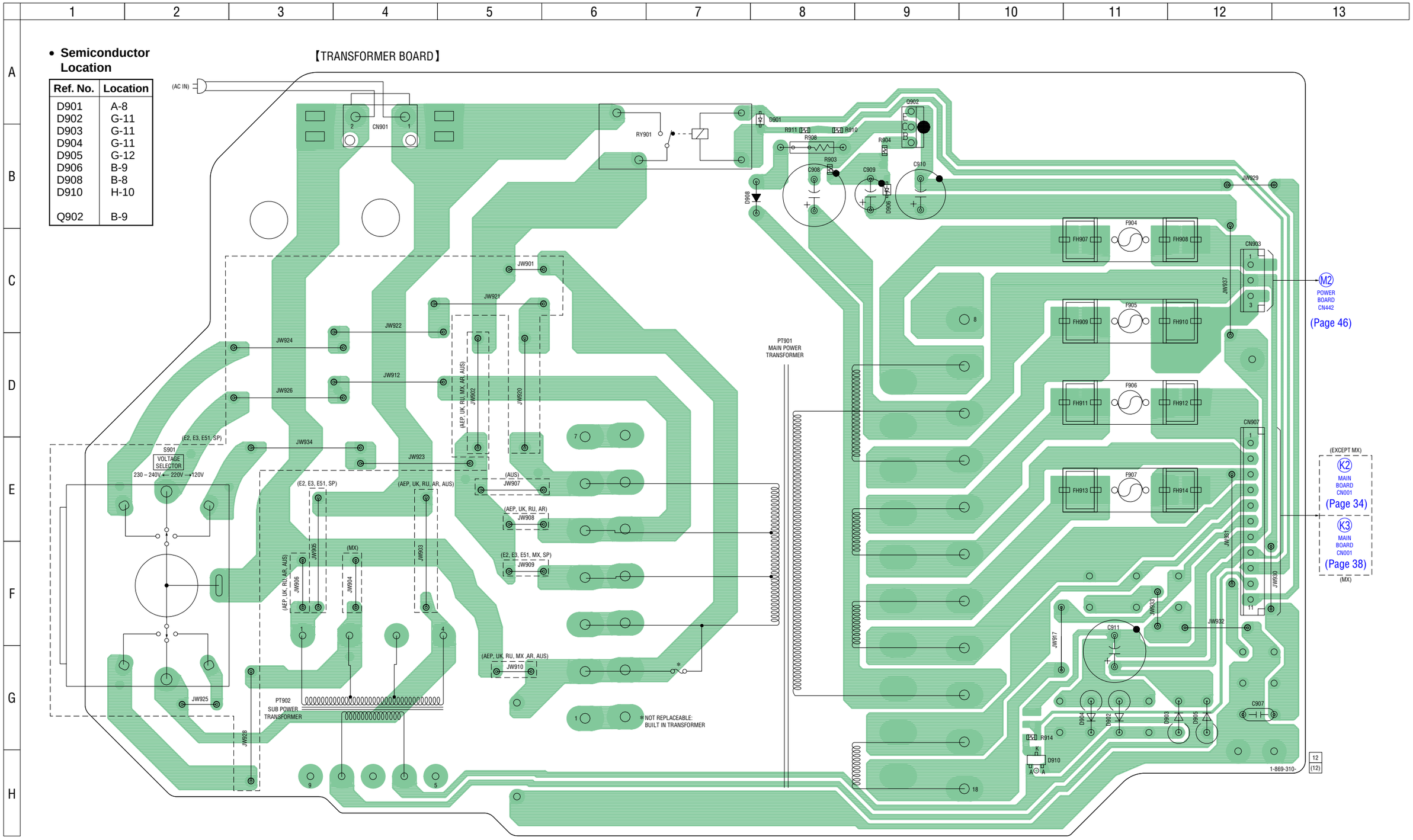

7-35. SCHEMATIC DIAGRAM – TRANSFORMER Board (RG290) –

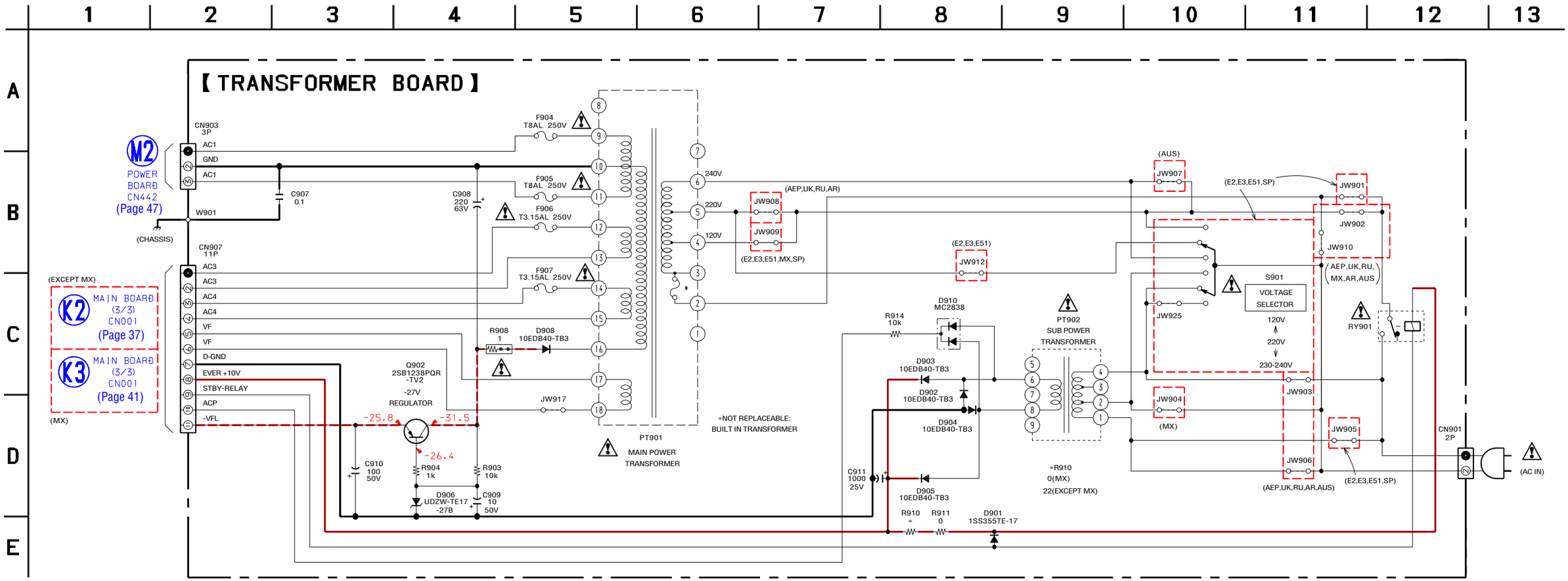

- **IC Block Diagrams**

– CD Board –

IC203 BH18LB1WG-TR

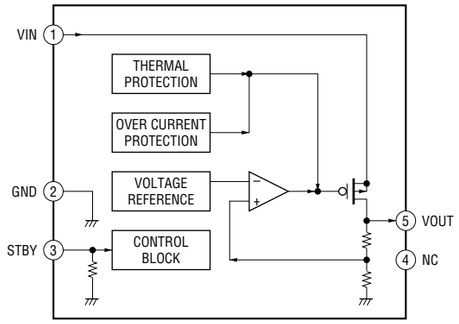

IC402 BA5947FM-E2

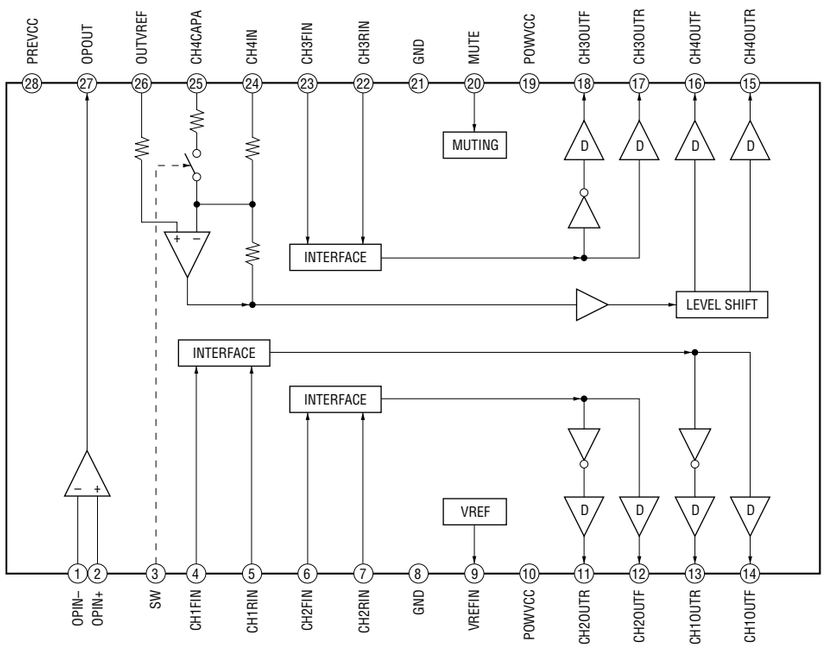

– BD Board –

IC251 BA5947FM-E2

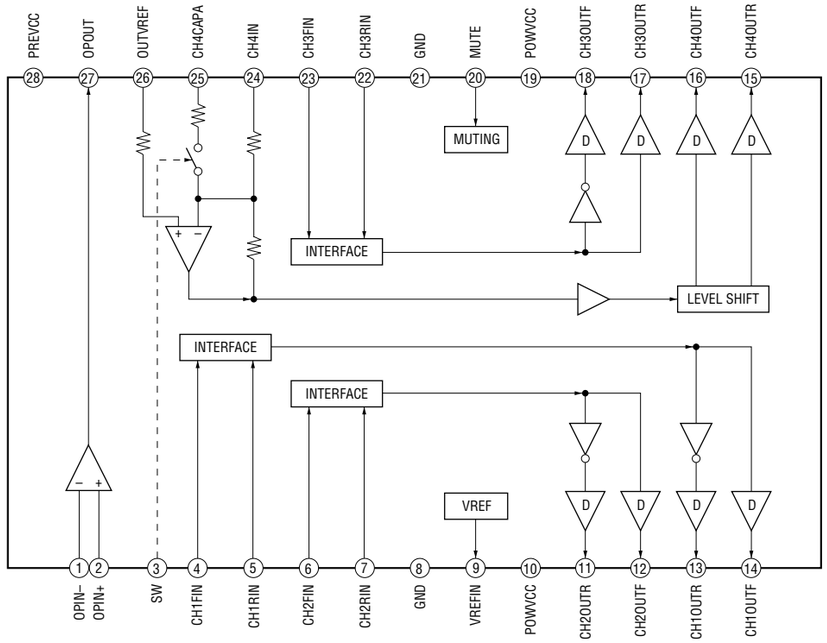

IC303 BH15FB1WG

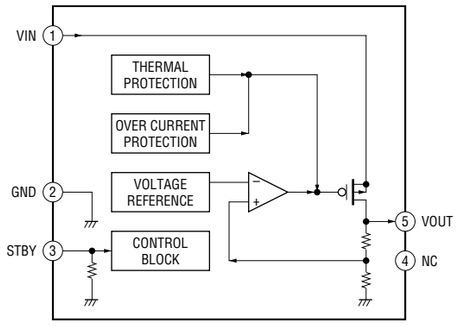

IC301 TC94A34FG-002

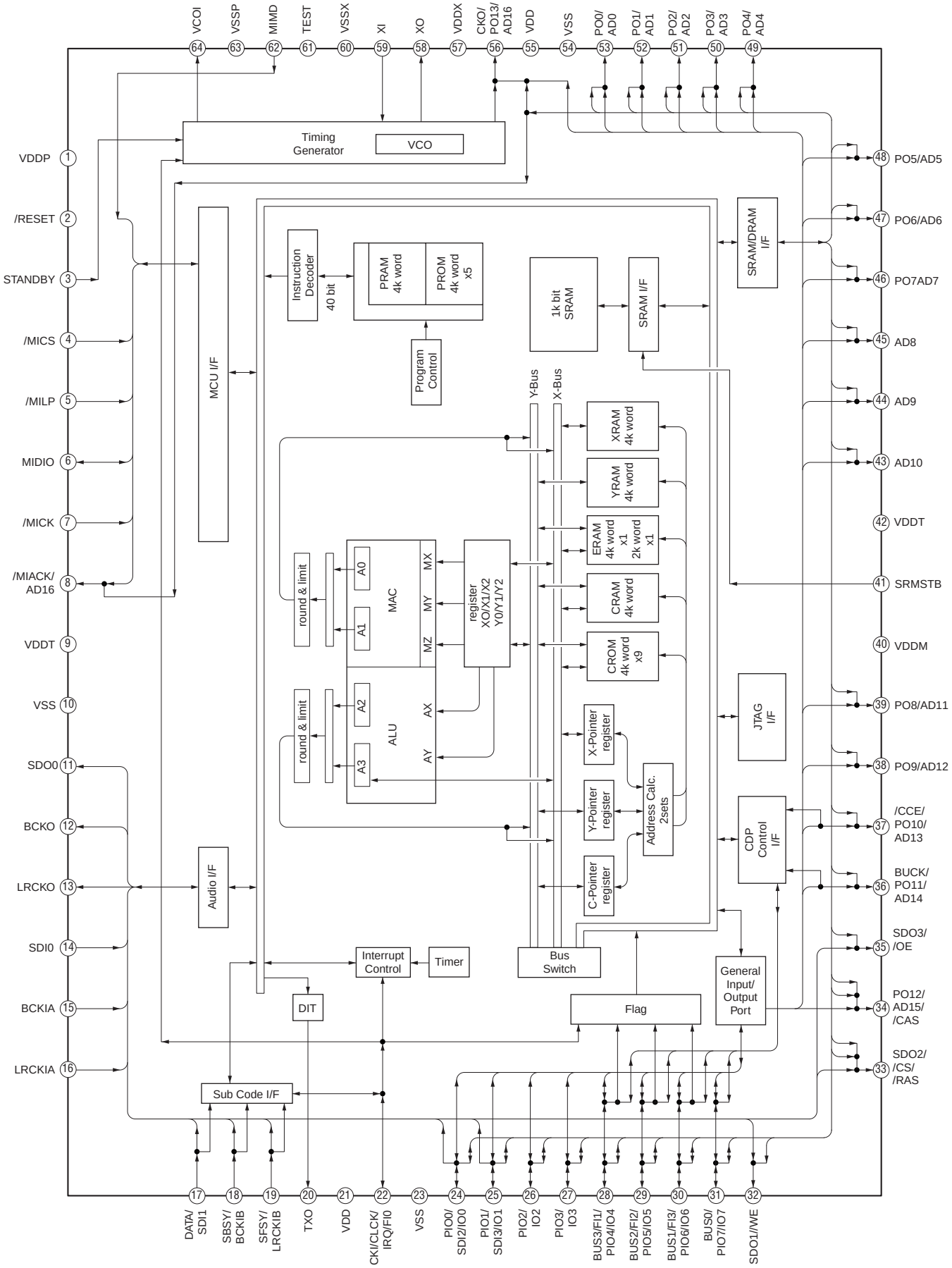

– DRIVER Board –

IC701, 712 BA6956AN

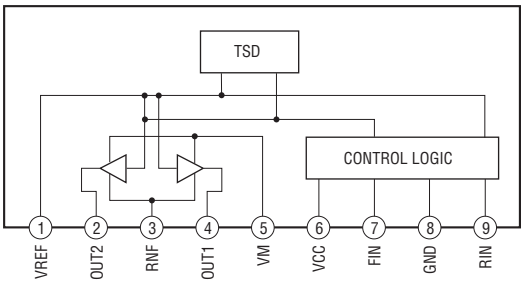

– MAIN Board –

IC101 R2S15207FP

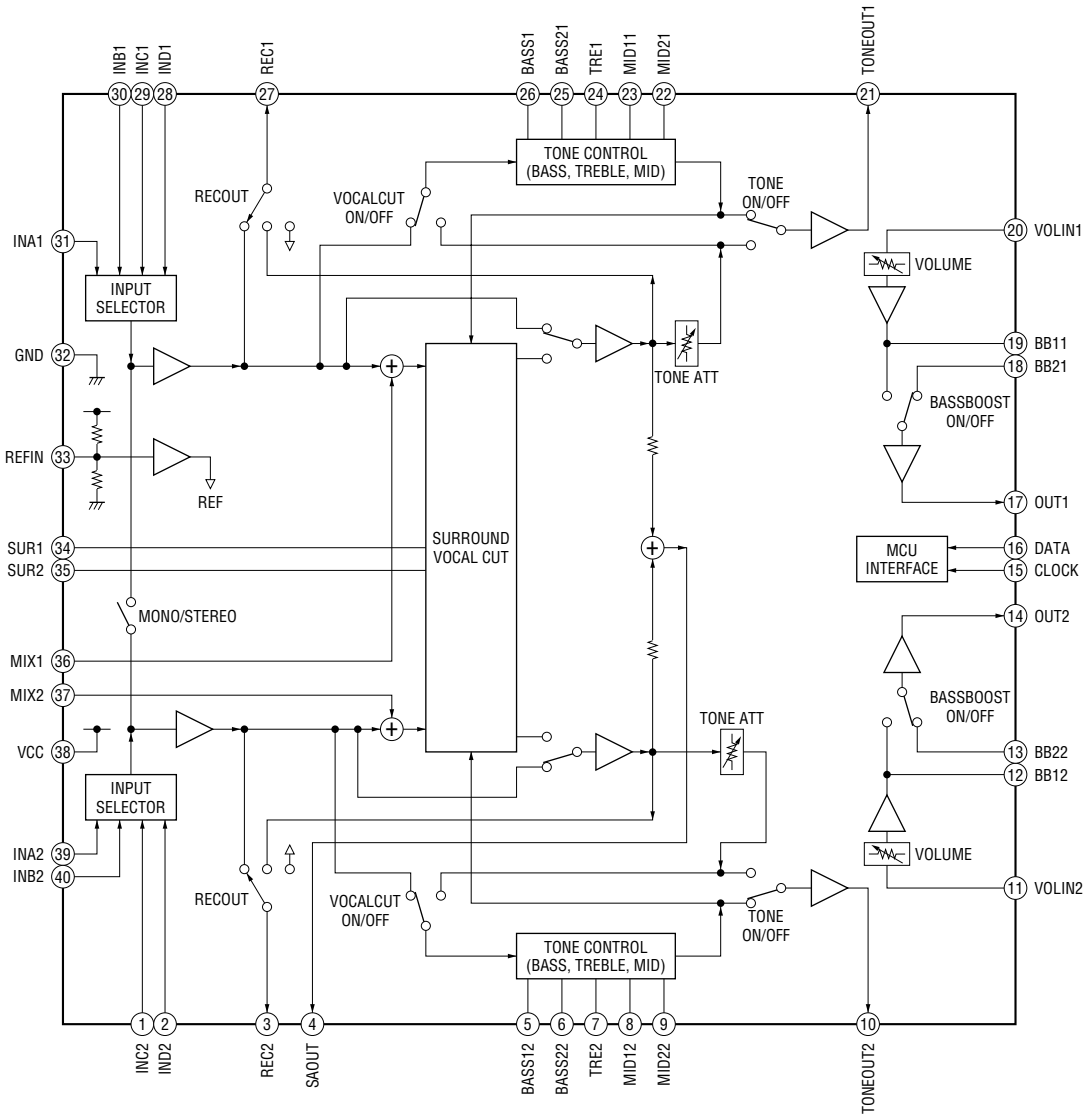

– MIC. AUX. HP Board –

IC802 M65850FP-E1

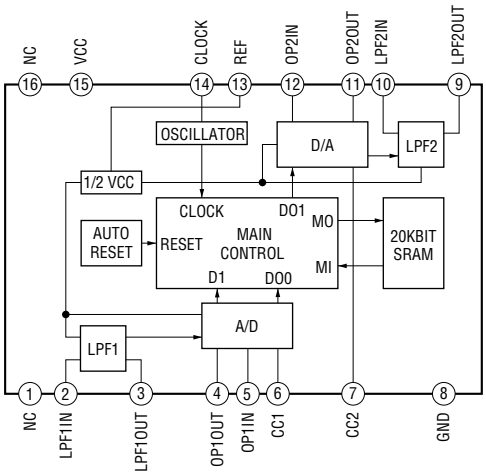

– CD-G Board –

IC1005 SN74AHCT04NSR

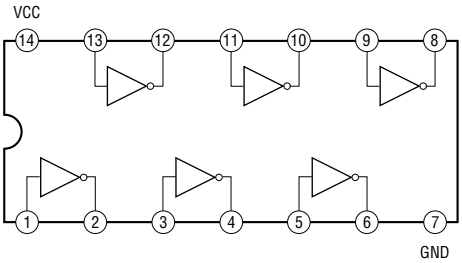

IC1006 NJM2561F1-TE2

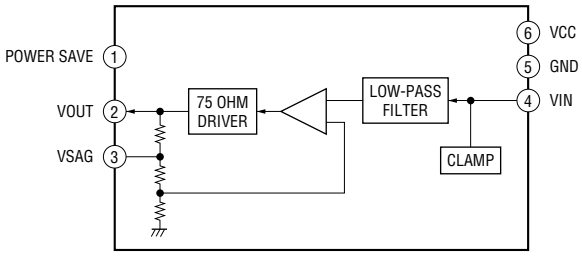

- **IC Pin Function Description**

CD BOARD IC201 CXD3014A-201R (CD DSP)

Pin No.	Pin Name	I/O	Description
1	LRCK	O	L/R sampling clock signal output terminal
2	LRCKI	I	L/R sampling clock signal input terminal
3	PCMD	O	Serial data output terminal
4	PCMDI	I	Serial data input terminal
5	BCK	O	Bit clock signal output terminal
6	BCKI	I	Bit clock signal input terminal
7	XTACN	I	Oscillation circuit on/off control signal input from the system controller "L": oscillation stop, "H": self-oscillation
8	XRST	I	System reset signal input from the system controller "L": reset
9	VSS	-	Ground terminal
10	IREQ-MP3	O	MP3 data request signal output to the system controller
11	CLOK	I	CD serial data transfer clock signal input from the system controller
12	DATA2	I	MP3 serial data input from the system controller
13	XLAT-MP3	I	MP3 serial data latch pulse signal input from the system controller
14	REQ-MP3	I	MP3 data request signal input from the system controller
15	ACK-MP3	O	MP3 acknowledge signal output to the system controller
16	XLAT	I	CD serial data latch pulse signal input from the system controller
17	VDD	-	Power supply terminal (+1.8V)
18	SVSS	-	Ground terminal
19	SVDD	-	Power supply terminal (+1.8V)
20	SENS	O	Internal status (SENSE) signal output to the system controller
21	WFCK	O	Write frame clock signal output terminal Not used
22	XUGF	O	XUGF signal output terminal Not used
23	XPCK	O	XPCK signal output terminal Not used
24	GFS	O	Guard frame sync signal output terminal Not used
25	C2PO	O	C2 pointer signal output terminal Not used
26	SCOR	O	Subcode sync (S0+S1) detection signal output to the system controller
27	VDD	-	Power supply terminal (+1.8V)
28	COUT	O	Numbers of track counted signal output terminal Not used
29	SVSS	-	Ground terminal
30	SVDD	-	Power supply terminal (+1.8V)
31	MIRR	O	Mirror signal output terminal Not used
32	DFCT	O	Defect signal output terminal Not used
33	FOK	O	Focus OK signal output terminal Not used
34	VSS	-	Ground terminal
35	VDD	-	Power supply terminal (+1.8V)
36	VSS	-	Ground terminal
37	LOCK	O	GFS is sampled by 460 Hz "H" output when GFS is "H" Not used
38	MDP	O	Spindle motor servo control signal output terminal
39	SSTP	I	Disc inner position detection signal input terminal
40	IOVSS1	-	Ground terminal
41	SFDR	O	Sled servo drive signal (+) output terminal
42	SRDR	O	Sled servo drive signal (-) output terminal
43	TFDR	O	Tracking servo drive signal (+) output terminal
44	TRDR	O	Tracking servo drive signal (-) output terminal
45	FFDR	O	Focus servo drive signal (+) output terminal

Pin No.	Pin Name	I/O	Description
46	FRDR	O	Focus servo drive signal (-) output terminal
47	IOVDD1	-	Power supply terminal (+3.3V)
48	AVDD0	-	Power supply terminal (+3.3V)
49	AVSS0	-	Ground terminal
50	E	I	E signal input from the optical pick-up block
51	F	I	F signal input from the optical pick-up block
52	TEI	I	Tracking error signal input terminal
53	TEO	O	Tracking error signal output terminal
54	FEI	I	Focus error signal input terminal
55	FEO	O	Focus error signal output terminal
56	VC	O	Middle point voltage output terminal
57	A	I	A signal input from the optical pick-up block
58	B	I	B signal input from the optical pick-up block
59	C	I	C signal input from the optical pick-up block
60	D	I	D signal input from the optical pick-up block
61	AVDD4	-	Power supply terminal (+3.3V)
62	RFDCO	O	RFDC signal output terminal Not used
63	PDSENS	I	Reference voltage input terminal for PD
64	AC_SUM	O	RFAC summing amplifier signal output terminal
65	EQ_IN	I	RF equalizer circuit input terminal
66	LD	O	Laser diode on/off control signal output to the automatic power control circuit "H": laser diode on
67	PD	I	Light amount monitor input from the laser diode of optical pick-up block
68	RFC	I	Equalizer cut off frequency adjustment terminal
69	AVSS4	-	Ground terminal
70	RFACO	O	EFM signal output terminal
71	RFACI	I	EFM signal input terminal
72	AVDD3	-	Power supply terminal (+3.3V)
73	BIAS	I	Asymmetry circuit constant current input terminal
74	ASYI	I	Playback EFM asymmetry comparator voltage input terminal
75	ASYO	O	Playback EFM full-swing output terminal
76	VPCO	O	Charge pump output terminal for broad-band EFM PLL
77	VCTL	I	VCO2 control voltage input terminal for broad-band EFM PLL
78	AVSS3	-	Ground terminal
79	CLTV	I	VCO1 control voltage input terminal for multiplier
80	FILO	O	Filter output terminal for master PLL
81	FILI	I	Filter input terminal for master PLL
82	PCO	O	Charge pump output terminal for master PLL
83	SVSS	-	Ground terminal
84	SVDD	-	Power supply terminal (+1.8V)
85	SSTB-MP3	I	MP3 standby on/off control signal input terminal "L": standby Not used
86	VDD	-	Power supply terminal (+1.8V)
87	VSS	-	Ground terminal
88	TEST1	I	Input terminal for the test Normally: fixed at "L"
89	DATA	I	CD serial data input from the system controller
90	CLK2	I	MP3 serial data transfer clock signal input from the system controller
91	SVSS	-	Ground terminal

Pin No.	Pin Name	I/O	Description
92	SVDD	-	Power supply terminal (+2.5V)
93	JTAGTCK	I	Clock signal input terminal (for JTAG) Not used
94	JTAGTDI	I	Data input terminal (for JTAG) Not used
95	JTAGTDO	O	Data output terminal (for JTAG) Not used
96	JTAGTMS	I	Mode select signal input terminal (for JTAG) Not used
97	TRST	I	Reset signal input terminal (for JTAG) Not used
98	VSS	-	Ground terminal
99	VDD	-	Power supply terminal (+1.8V)
100	IOVDD2	-	Power supply terminal (+3.3V)
101	DOUT	O	Digital audio signal output terminal Not used
102	TEST	I	Input terminal for the test Normally: fixed at "L"
103	TES1	I	Input terminal for the test Normally: fixed at "L"
104	IOVSS2	-	Ground terminal
105	PLLVDD	-	Power supply terminal (+1.8V)
106	PLLVSS	-	Ground terminal
107	XVSS	-	Ground terminal
108	XTAO	O	System clock output terminal (16.9344 MHz)
109	XTAI	I	System clock input terminal (16.9344 MHz)
110	XVDD	-	Power supply terminal (+1.8V)
111	AVDD1	-	Power supply terminal (+3.3V)
112	AOUT1	O	L-ch analog audio signal output terminal
113	VREFL	O	L-ch reference voltage output terminal
114	AVSS1	-	Ground terminal
115	AVSS2	-	Ground terminal
116	VREFR	O	R-ch reference voltage output terminal
117	AOUT2	O	R-ch analog audio signal output terminal
118	AVDD2	-	Power supply terminal (+3.3V)
119	IOVDD0	-	Power supply terminal (+3.3V)
120	IOVSS0	-	Ground terminal

BD BOARD IC101 CXD3059AR (CD DSP)

Pin No.	Pin Name	I/O	Description
1	MIRR	O	Mirror signal output terminal Not used
2	DFCT	O	Defect signal output terminal Not used
3	FOK	O	Focus OK signal output terminal Not used
4	VSS	-	Ground terminal
5	LOCK	O	GFS is sampled by 460 Hz "H" output when GFS is "H" Not used
6	MDP	O	Spindle motor servo control signal output terminal
7	SSTP	I	Disc inner position detection signal input terminal
8	IOVSS0	-	Ground terminal
9	SFDR	O	Sled servo drive signal (+) output terminal
10	SRDR	O	Sled servo drive signal (-) output terminal
11	TFDR	O	Tracking servo drive signal (+) output terminal
12	TRDR	O	Tracking servo drive signal (-) output terminal
13	FFDR	O	Focus servo drive signal (+) output terminal
14	FRDR	O	Focus servo drive signal (-) output terminal
15	IOVDD1	-	Power supply terminal (+3.3V)
16	AVDD0	-	Power supply terminal (+3.3V)
17	AVSS0	-	Ground terminal
18	NC	-	Not used
19	E	I	E signal input from the optical pick-up block
20	F	I	F signal input from the optical pick-up block
21	TEI	I	Tracking error signal input terminal
22	TEO	O	Tracking error signal output terminal
23	FEI	I	Focus error signal input terminal
24	FEO	O	Focus error signal output terminal
25	VC	O	Middle point voltage output terminal
26	A	I	A signal input from the optical pick-up block
27	B	I	B signal input from the optical pick-up block
28	C	I	C signal input from the optical pick-up block
29	D	I	D signal input from the optical pick-up block
30	NC	-	Not used
31	AVDD4	-	Power supply terminal (+3.3V)
32	RFDCO	O	RFDC signal output terminal Not used
33	PDSENS	I	Reference voltage input terminal for PD
34	AC_SUM	O	RFAC summing amplifier signal output terminal
35	EQ_IN	I	RF equalizer circuit input terminal
36	LD	O	Laser diode on/off control signal output to the automatic power control circuit "H": laser diode on
37	PD	I	Light amount monitor input from the laser diode of optical pick-up block
38	NC	-	Not used
39	RFC	I	Equalizer cut off frequency adjustment terminal
40	AVSS4	-	Ground terminal
41	RFACO	O	EFM signal output terminal
42	RFACI	I	EFM signal input terminal
43	AVDD3	-	Power supply terminal (+3.3V)
44	BIAS	I	Asymmetry circuit constant current input terminal
45	ASYI	I	Playback EFM asymmetry comparator voltage input terminal

Pin No.	Pin Name	I/O	Description
46	ASYO	O	Playback EFM full-swing output terminal
47	VPCO	O	Charge pump output terminal for broad-band EFM PLL
48	VCTL	I	VCO2 control voltage input terminal for broad-band EFM PLL
49	AVSS3	-	Ground terminal
50	CLTV	I	VCO1 control voltage input terminal for multiplier
51	FILO	O	Filter output terminal for master PLL
52	FILI	I	Filter input terminal for master PLL
53	PCO	O	Charge pump output terminal for master PLL
54	AVDD5	-	Power supply terminal (+3.3V)
55	DDVROUT	O	DC/DC converter output terminal
56	DDVRSEN	O	DC/DC converter output voltage monitor input terminal
57	AVSS5	-	Ground terminal
58	DDCR	I	Input terminal for the test Normally: fixed at "L"
59	NC	-	B signal input from the optical pick-up block
60	BCKI	I	Bit clock signal input terminal
61	PCMDI	I	Serial data input from the MP3 decoder
62	LRCKI	I	L/R sampling clock signal input terminal
63	LRCK	O	L/R sampling clock signal output terminal
64	VSS	-	Ground terminal
65	PCMD	O	Serial data output to the MP3 decoder
66	BCK	O	Bit clock signal output terminal
67	VDD	-	Power supply terminal (+3.3V)
68	EMPH	O	"L" is output when playback disc is emphasis off "H" is output when playback disc is emphasis on Not used
69	EMPHI	O	"L" is input when de-emphasis is off "H" is output when de-emphasis is on Not used
70	IOVDD2	-	Power supply terminal (+3.3V)
71	DOUT	O	Digital audio signal output terminal Not used
72	TEST	I	Input terminal for the test Normally: fixed at "L"
73	TEST1	I	Input terminal for the test Normally: fixed at "L"
74	IOVSS2	-	Ground terminal
75	NC	-	Not used
76	XVSS	-	Ground terminal
77	XTAO	O	System clock output terminal (16.9344 MHz)
78	XTAI	I	System clock input terminal (16.9344 MHz)
79	XVDD	-	Power supply terminal (+1.8V)
80	AVDD1	-	Power supply terminal (+3.3V)
81	AOUT1	O	L-ch analog audio signal output terminal
82	VREFL	O	L-ch reference voltage output terminal
83	AVSS1	-	Ground terminal
84	AVSS2	-	Ground terminal
85	VREFR	O	R-ch reference voltage output terminal
86	AOUT2	O	R-ch analog audio signal output terminal
87	AVDD2	-	Power supply terminal (+3.3V)
88	NC	-	B signal input from the optical pick-up block
89	IOVDD0	-	Power supply terminal (+3.3V)
90	RMUT	O	Muting control signal (for R-ch) output terminal Not used
91	LMUT	O	Muting control signal (for L-ch) output terminal Not used
92	NC	-	B signal input from the optical pick-up block

Pin No.	Pin Name	I/O	Description
93	XTSL	I	Input terminal for the system clock frequency setting "L": 16.9344 MHz, "H": 33.8688MHz Fixed at "L" in this set
94	IOVSS0	-	Ground terminal
95	XTACN	I	Oscillation circuit on/off control signal input from the system controller "L": oscillation stop, "H": self-oscillation
96	SQSO	O	Subcode Q data output terminal Not used
97	SQCK	I	Subcode Q data reading clock signal input terminal Not used
98	SBSO	O	Subcode serial data output to the CD graphic decoder
99	EXCK	I	Subcode serial data reading clock signal input from the CD graphic decoder
100	XRST	I	System reset signal input from the system controller "L": reset
101	SYSM	I	System muting on/off control signal input terminal "H": muting on Fixed at "L" in this set
102	DATA	O	CD serial data input from the system controller
103	VSS	-	Ground terminal
104	XLAT	I	CD serial data latch pulse signal input from the system controller
105	CLOCK	I	CD serial data transfer clock signal input from the system controller
106	VDD	-	Power supply terminal (+3.3V)
107	SENS	O	Internal status (SENSE) signal output to the system controller
108	SCLK	I	SENSE serial data reading clock signal input terminal Not used
109	ATSK	O	Output terminal for anti-shock Not used
110	WFCK	O	Write frame clock signal output to the CD graphic decoder
111	XUGF	O	XUGF signal output terminal Not used
112	XPCK	O	XPCK signal output terminal Not used
113	GFS	O	Guard frame sync signal output terminal Not used
114	C2PO	O	C2 pointer signal output terminal Not used
115	SCOR	O	Subcode sync (S0+S1) detection signal output to the system controller and CD graphic decoder
116	VDD	-	Power supply terminal (+3.3V)
117	C4M	O	4.2336 MHz clock signal output terminal Not used
118	WDCK	O	Guard subcode sync (S0+S1) detection signal output terminal Not used
119	COUT	O	Numbers of track counted signal output to terminal Not used
120	NC	-	Not used

MAIN BOARD IC901 uPD78F0547GC (S)-UBT-A (SYSTEM CONTROLLER)

Pin No.	Pin Name	I/O	Description
1	I-AC-PULSE	I	AC power detection signal input terminal
2	O-REC/PB	O	Recording/playback selection signal output terminal "L": playback, "H": recording
3	O-REC-MUTE	O	Recording muting on/off control signal output terminal "L": muting on
4	O-BIAS	O	Recording bias on/off control signal output terminal "H": bias on
5	O-STK-MUTE	O	Standby signal output to the power amplifier (for front speaker)
6	O-SW_GAIN	O	Sub woofer gain control signal output terminal Not used
7	O-POWER-RELAY	O	Power on/off relay drive signal output terminal "H": power on
8	O-XM-POWER3.3	O	Power on/off control signal output terminal for XM section Not used
9	I-AC-CUT	I	AC power off detection signal input terminal
10	I-XRESET	I	System reset signal input from the reset signal generator "L": reset For several hundreds msec. after the power supply rises, "L" is input, then it changes to "H"
11	XT2 (32.768KHZ)	O	Sub system clock output terminal (32.768 kHz)
12	XT1 (32.768KHZ)	I	Sub system clock input terminal (32.768 kHz)
13	FLMDO	I	Internal flash memory data writing mode control signal input terminal
14	X2 (16MHZ)	O	Main system clock output terminal (16 MHz)
15	X1 (16MHZ)	I	Main system clock input terminal (16 MHz)
16	REGC	-	External capacitor connection terminal for regulator
17	VSS	-	Ground terminal
18	EVSS	-	Ground terminal
19	VDD	-	Power supply terminal (+3.3V)
20	EVDD	-	Power supply terminal (+3.3V)
21	O-SYS-MUTE	O	Muting on/off control signal output terminal "L": muting on
22	O-SWR	O	Sub woofer speaker on/off relay drive signal output terminal Not used
23	O-FRONT-SP-RELAY	O	Front speaker on/off relay drive signal output terminal "H": front speaker on
24	O-XTCN	O	Oscillation circuit on/off control signal output to the CD DSP "L": oscillation stop, "H": self-oscillation
25	O-MP3-RST	O	System reset signal output to the MP3 decoder "L": reset (RG290: Mexican model)
26	O-MP3-XLAT/ O-MP3-CS	O	MP3 serial data latch pulse signal output to the CD DSP (Except RG290: Mexican model) MP3 chip select signal output to the MP3 decoder (RG290: Mexican model)
27	I-MP3-ACK	I	MP3 acknowledge signal input from the CD DSP (Except RG290: Mexican model) MP3 acknowledge signal input from the MP3 decoder (RG290: Mexican model)
28	O-XLAT/ O-MP3-STB	O	CD serial data latch pulse signal output to the CD DSP (Except RG290: Mexican model) Standby signal output to the MP3 decoder (RG290: Mexican model)
29	I-MP3-REQ	I	MP3 data request signal input from the CD DSP (Except RG290: Mexican model) MP3 data request signal input from the MP3 decoder (RG290: Mexican model)
30	O-MP3-CS/ O-MP3-LP	O	MP3 data request signal output to the CD DSP (Except RG290: Mexican model) MP3 serial data latch pulse signal output to the MP3 decoder (RG290: Mexican model)
31	O-D-MUTE/ O-XLT	O	System reset signal output to the motor/coil driver "L": reset (Except RG290: Mexican model) CD serial data latch pulse signal output to the CD DSP (RG290: Mexican model)
32	O-XRST	O	System reset signal output to the CD DSP "L": reset (Except RG290: Mexican model) System reset signal output to the CD DSP and motor/coil driver "L": reset (RG290: Mexican model)
33	O-LM-R	O	Loading motor control signal output terminal (reverse direction)
34	O-LM-F	O	Loading motor control signal output terminal (forward direction)
35	O-TM-R	O	Table motor control signal output terminal (reverse direction)
36	O-TM-F	O	Table motor control signal output terminal (forward direction)

Pin No.	Pin Name	I/O	Description
37	I-CD-NUMBER-SENS	I	Disc table address sensor input terminal
38	I-OPEN-SW	I	Disc table open/close detection switch input terminal "L": open, "H": close
39	I-XTUNED	I	Tuning detection signal input terminal Not used
40	I-SCOR	I	Subcode sync (S0+S1) detection signal input from the CD DSP
41	O-CDG-RST/ I-RDS-CLK	I/O	System reset signal output to the CD graphics decoder "L": reset (RG290: Mexican model) RDS data transfer clock signal input from the tuner (FM/AM) (RG190: AEP/RG290: AEP, UK models)
42	O-LC23003-CE	O	Chip enable signal output to the tuner (FM/AM)
43	O-LC23003-DO	O	Serial data output to the tuner (FM/AM)
44	O-LC23003-CLK	O	Serial data transfer clock signal output to the tuner (FM/AM)
45	I-LC23003-DI	I	Serial data input from the tuner (FM/AM)
46	O-VMUTE	O	Video muting on/off control signal output terminal "H": muting on (RG290: Mexican model)
47	O-CDG -POWER	O	Power on/off control signal output terminal for CD-G section "H": power on (RG290: Mexican model)
48	I-CDG-DET	I	CD-G detection signal input from the CD graphics decoder
49	O-CDG-MUTE-DATA/ I-RDS-DATA	I/O	Muting control signal output to the CD graphics decoder (RG290: Mexican model) RDS data input from the tuner (FM/AM) (RG190: AEP/RG290: AEP, UK models)
50	I-XM-RXD	I	Receive data input terminal Not used
51	O-XM-TXD	O	Transmit data output terminal Not used
52	O-CD-DATA	O	CD serial data output to the CD DSP
53	I-CD-SENS	I	Internal status (SENSE) signal input from the CD DSP
54	O-CD-CLK	O	CD serial data transfer clock signal output to the CD DSP
55	I-MIC-DET	I	Microphone plug insert detection signal input terminal "L": microphone plug insert (RG190: 120V AC area in E, Chilean, Peruvian, Argentina/RG290: 120V AC area in E, Chilean, Peruvian, Mexican, Argentina models)
56	O-R2S15208SP-DATA	O	Serial data output terminal Not used
57	O-AUDIO-CLK	O	Serial data transfer clock signal output to the electrical volume
58	O-R2S15207FP-DATA	O	Serial data output to the electrical volume
59	AVREF	I	Reference voltage (+3.3V) input terminal
60	AVSS	-	Ground terminal
61	I-HP/AUDIO IN	I	Headphone plug and audio in plug insert detection signal input terminal "L": headphone plug or audio in plug insert
62	I-SUFFIX	I	Setting terminal for the model and destination
63	I-VACS	I	VACS signal input terminal (A/D input)
64	I-PROTECTOR	I	Protector detection signal input terminal
65	I-KEY0	I	Front panel key input terminal (A/D input)
66	I-CD-ENCODER	I	Disc table address sensor (rotary encoder) input terminal
67	I-MODEL	I	Setting terminal for the model and destination
68	I-STREAM	I	Audio signal input for stream LED (A/D input)
69	O-STBY-LED	O	LED drive signal output terminal for STANDBY indicator "H": LED on
70	O-MP3-CLK	O	MP3 serial data transfer clock signal output to the CD DSP (Except RG290: Mexican model) MP3 serial data transfer clock signal output to the MP3 decoder (RG290: Mexican model)
71	I-MP3-DATA	I	MP3 serial data input terminal (Except RG290: Mexica model) MP3 serial data input from the MP3 decoder (RG290: Mexican model)

Pin No.	Pin Name	I/O	Description
72	O-MP3-DATA	O	MP3 serial data output to the CD DSP (Except RG290: Mexican model) MP3 serial data input from the MP3 decoder (RG290: Mexican model)
73	I-TCM-SYNC	I	Sync signal input from the tape mechanism deck controller
74	O-VFD-RESET	O	System reset signal output to the fluorescent indicator tube/LED driver "L": reset
75	O-VFD-CE	O	Chip enable signal output to the fluorescent indicator tube/LED driver
76	O-VFD-DATA	O	Serial data output to the fluorescent indicator tube/LED driver
77	I-VFD-DATA	I	Serial data input from the fluorescent indicator tube/LED driver
78	O-VFD-CLK	O	Serial data transfer clock signal output to the fluorescent indicator tube/LED driver
79	I-WAKEUP	I	Wake up signal input terminal
80	I-XSIRCS-IN	I	SIRCS signal input from the remote control receiver

CD-G BOARD IC1001 TC9411AFG (BS, K) (CD GRAPHICS DECODER)

Pin No.	Pin Name	I/O	Description
1	SESUB	I	Not used
2	CLCK	O	Subcode serial data reading clock signal output to the CD DSP
3	DATA	I	Subcode serial data input from the CD DSP
4	SBSY	I	Subcode sync (S0+S1) detection signal input from the CD DSP
5	SFSY	I	Write frame clock signal input from the CD DSP
6	MUTE	I	Muting control signal input from the system controller
7	VDD1	-	Power supply terminal (+5V)
8	VSS1	-	Ground terminal
9	MCE	I	Chip enable signal input terminal Not used
10	MCDO	O	Serial data output terminal Not used
11	MCDI	I	Serial data input terminal Not used
12	MCCK	I	Serial data transfer clock signal input terminal Not used
13	XWE	O	Write enable signal output to the D-RAM
14	XRAS	O	Row address strobe signal output to the D-RAM
15 to 22	VA0 to VA7	O	Address signal output to the D-RAM
23	VSS2	-	Ground terminal
24	VDD2	-	Power supply terminal (+5V)
25	VD0	I/O	Two-way data bus with the D-RAM
26	XCAS	O	Column address strobe signal output to the D-RAM
27	VD1	I/O	Two-way data bus with the D-RAM
28	XOE	O	Output enable signal output to the D-RAM
29, 30	VD2, VD3	I/O	Two-way data bus with the D-RAM
31	BLANKIN	I	Blanking signal input terminal Not used
32	BIN	I	RGB (B) signal input terminal Not used
33	GIN	I	RGB (G) signal input terminal Not used
34	RIN	I	RGB (R) signal input terminal Not used
35	XHSYNC	O	Horizontal synchronize signal output terminal Not used
36	XVSYNC	O	Vertical synchronize signal output terminal Not used
37	GDET	O	CD-G detection signal output to the systerm controller
38	VON	I	Video on control signal input terminal Not used
39, 40	TEST1, TEST2	I	Test mode setting terminal
41	LINESW	I	Line switch input terminal Not used
42	VREF	I	Reference voltage input terminal
43	AVDD	-	Power supply terminal (+5V)
44	VDOUT	O	Video signal output terminal
45	AVSS	-	Ground terminal
46, 47	BIAS1, BIAS2	I	Bias setting terminal
48	VSS3	-	Ground terminal
49	VDD3	-	Power supply terminal (+5V)
50	QNG	O	Not used
51	PNG	O	Not used
52	DEN	I	NTSC/PAL selection signal input terminal
53	FSC	O	Not used
54	XRESET	I	System reset signal input from the system controller "L": reset
55	SENTSC	I	Not used
56	PDOWN	I	Power down signal input terminal Not used

Pin No.	Pin Name	I/O	Description
57	XI2	I	System clock input terminal (17.734475 MHz) (for PAL) Not used
58	XO2	O	System clock output terminal (17.734475 MHz) (for PAL) Not used
59	XI1	I	System clock input terminal (14.31818 MHz) (for NTSC)
60	XO1	O	System clock output terminal (14.31818 MHz) (for NTSC)

PANEL BOARD IC701 uPD780232GC-509-8BT-A
(FLUORESCENT INDICATOR TUBE/LED DRIVER, TAPE MECHANISM DECK CONTROLLER)

Pin No.	Pin Name	I/O	Description
1	VDD1	-	Power supply terminal (+3.3V)
2	VSS1	-	Ground terminal
3	X1	I	System clock input terminal (4.19 MHz)
4	X2	O	System clock output terminal (4.19 MHz)
5	IC	I	Input terminal for the IC test Normally: fixed at "L"
6	XRESET	I	System reset signal input from the system controller "L": reset
7	SCK1	I	Serial data transfer clock signal input from the system controller
8	SI1	I	Serial data input from the system controller
9	SO1	O	Serial data output to the system controller
10	I-VOL A	I	Jog dial pulse input from the rotary encoder (VOLUME) (A phase input)
11	I-VOL B	I	Jog dial pulse input from the rotary encoder (VOLUME) (B phase input)
12	I-JOG A	I	Jog dial pulse input from the rotary encoder (multi jog) (A phase input)
13	I-JOG A	I	Jog dial pulse input from the rotary encoder (multi jog) (B phase input)
14, 15	NC	I	Not used
16	CE	I	Chip select signal input from the system controller
17	I-MODEL	I	Destination setting terminal
18	AVSS	-	Ground terminal
19 to 21	KEY1 to KEY3	I	Front panel key input terminal (A/D input)
22	KEY4	I	Key input terminal Not used
23	VSS0	-	Ground terminal
24	AVDD	-	Power supply terminal (+5V)
25	VDD0	-	Power supply terminal (+5V)
26	NC	I	Not used
27	I-HALF-B	I	Deck-B cassette detection signal input from the tape mechanism deck block "L": cassette in
28	I-REEL-B	I	Deck-B tape reel rotating detection signal input from the tape mechanism deck block
29	I-REC-SW	I	Recording-proof detection signal input from the tape mechanism deck block "L": recording possible
30	I-HALF-A	I	Deck-A cassette detection signal input from the tape mechanism deck block "L": cassette in
31	I-REEL-A	I	Deck-A tape reel rotating detection signal input from the tape mechanism deck block
32	NC	I	Not used
33	O-MOTOR	O	Capstan/reel motor drive signal output terminal "H": motor on
34	O-SOL-A	O	Deck-A side trigger plunger drive signal output terminal "H": plunger on
35	O-SOL-B	O	Deck-B side trigger plunger drive signal output terminal "H": plunger on
36	O-TCM-SYNC	O	Sync signal output to the system controller
37	SW LED	O	LED rive signal output of the SUBWOOFER indicator Not used
38	NC	I	Not used
39 to 43	STREAM LED1 to STREAM LED5	O	LED rive signal output of the stream indicator "H": LED on
44	NC	I	Not used
45 to 58	S1 to S14	O	Segment drive signal output to the fluorescent indicator tube
59	VDD2	-	Power supply terminal (+5V)
60	VLOD	-	Power supply terminal (-27V)
61 to 67	S15 to S21	O	Segment drive signal output to the fluorescent indicator tube
68 to 80	G13 to G11	O	Grid drive signal output to the fluorescent indicator tube

SECTION 8
EXPLODED VIEWS

NOTE:

- -XX and -X mean standardized parts, so they may have some difference from the original one.
- Color Indication of Appearance Parts
  Example:
  KNOB, BALANCE (WHITE) . . . (RED)
  ↑ Parts Color ↑ Cabinet's Color
- Abbreviation
  AR : Argentina model
  AUS : Australian model
  E2 : 120V AC area in E model
  E3 : 240V AC area in E model
  E51 : Chilean and Peruvian models
  EA : Saudi Arabia model
  MX : Mexican model
  RU : Russian model
  SP : Singapore model
- Items marked "*" are not stocked since they are seldom required for routine service. Some delay should be anticipated when ordering these items.
- The mechanical parts with no reference number in the exploded views are not supplied.
- Accessories are given in the last of the electrical parts list.

The components identified by mark ⚠ or dotted line with mark ⚠ are critical for safety.
Replace only with part number specified.

8-1. CASE SECTION

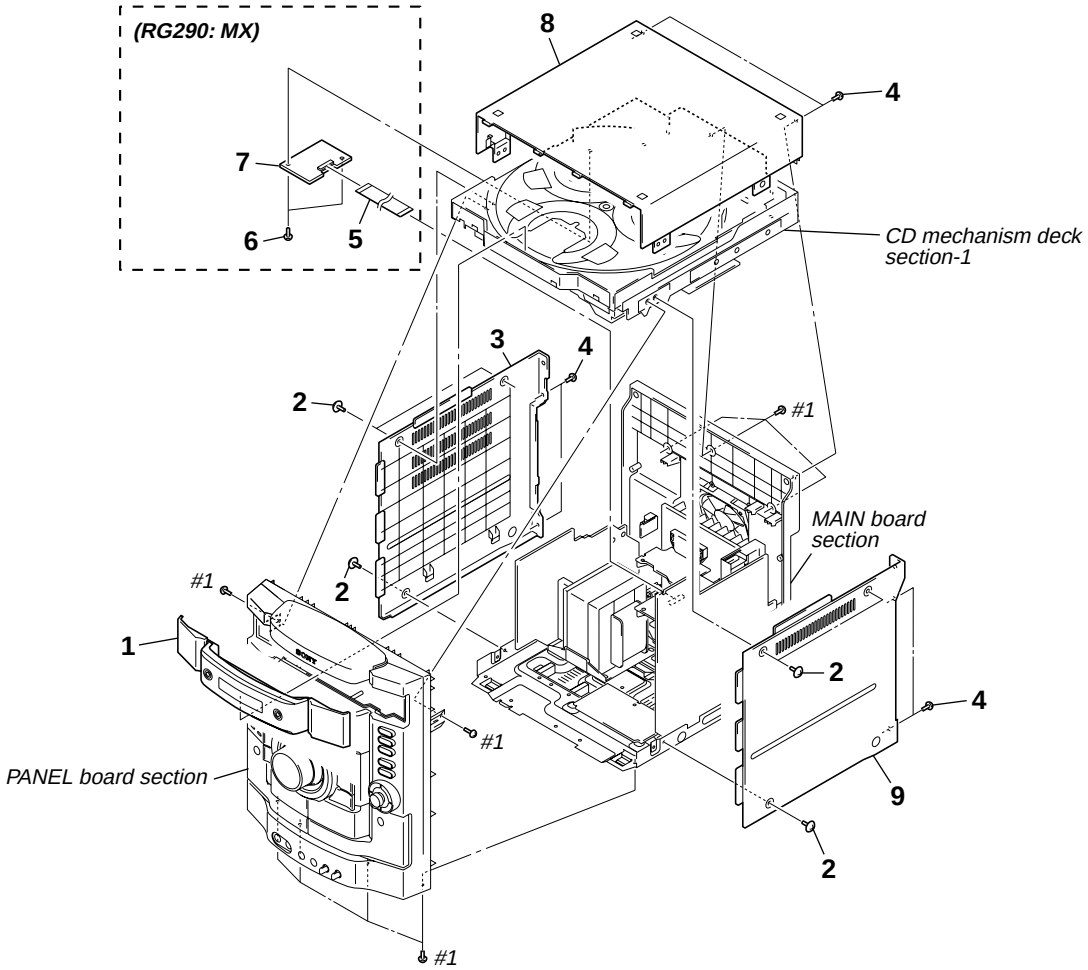

Ref. No.	Part No.	Description	Remark
1	2-658-299-21	LID (CD) (RG190: E2, E51, AR/RG290: E2, E51, AR)	
1	2-658-299-31	LID (CD) (RG190: AEP, RU, E3, EA, SP, AUS/ RG290: AEP, UK, RU, E3, SP, AUS)	
1	2-658-299-41	LID (CD) (RG290: MX)	
2	3-363-099-32	SCREW (CASE 3 TP2)	
3	2-599-855-11	CASE (SIDE-L)	
4	3-254-143-11	SCREW (B3), (+) BV TAPPING	
5	1-832-838-21	WIRE (FLAT TYPE) (13 CORE) (RG290: MX)	
6	4-951-620-01	SCREW (2.6X8), +BVTP	
7	A-1159-964-A	CD-G BOARD, COMPLETE (RG290: MX)	
8	2-599-854-11	CASE (TOP)	
9	2-599-856-11	CASE (SIDE-R)	
#1	7-685-646-79	SCREW +BVTP 3X8 TYPE2 IT-3	

8-2. PANEL BOARD SECTION

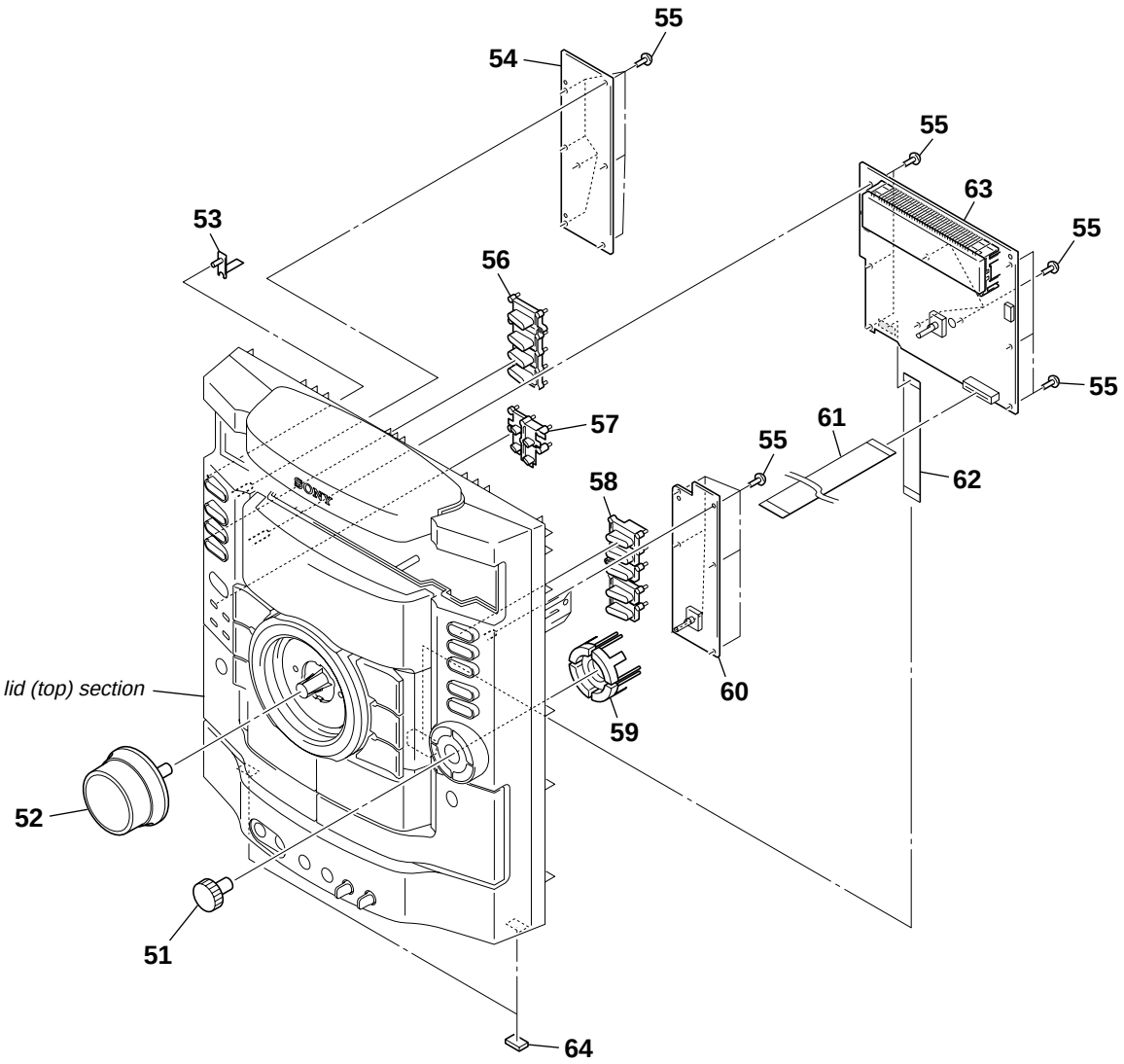

Ref. No.	Part No.	Description	Remark
51	2-658-294-11	KNOB (JOG)	
52	2-658-292-01	KNOB (VOL A)	
53	2-658-279-01	INDICATOR (POWER)	
54	A-1159-678-A	KEY LEFT BOARD, COMPLETE	(EXCEPT RG290: MX)
54	A-1163-368-A	KEY LEFT BOARD, COMPLETE (RG290: MX)	
55	4-951-620-01	SCREW (2.6X8), +BVTP	
56	2-658-275-01	KEY (POWER) (I/⏻, CD, TUNER/BAND, TAPE A/B, AUDIO IN)	
57	2-658-274-01	KEY (REC)	
58	2-658-276-01	KEY (CD) (DISC 1, DISC 2, DISC 3, DISC SKIP/EX-CHANGE, ⏏)	
59	2-658-281-01	KEY (JOG) (GROOVE, SURROUND, ENTER, EQ BAND)	
60	A-1159-681-A	KEY RIGHT BOARD, COMPLETE	(EXCEPT RG290: MX)
60	A-1159-682-A	KEY RIGHT BOARD, COMPLETE (RG290: MX)	
61	1-831-952-21	CABLE, FLEXIBLE FLAT (19 CORE)	
62	1-831-779-21	CABLE, FLEXIBLE FLAT (11 CORE)	
63	A-1163-359-A	PANEL BOARD, COMPLETE	(EXCEPT RG290: MX)
63	A-1163-360-A	PANEL BOARD, COMPLETE (RG290: MX)	
64	4-225-252-01	CUSHION (FOOT)	

8-3. LID (TOP) SECTION

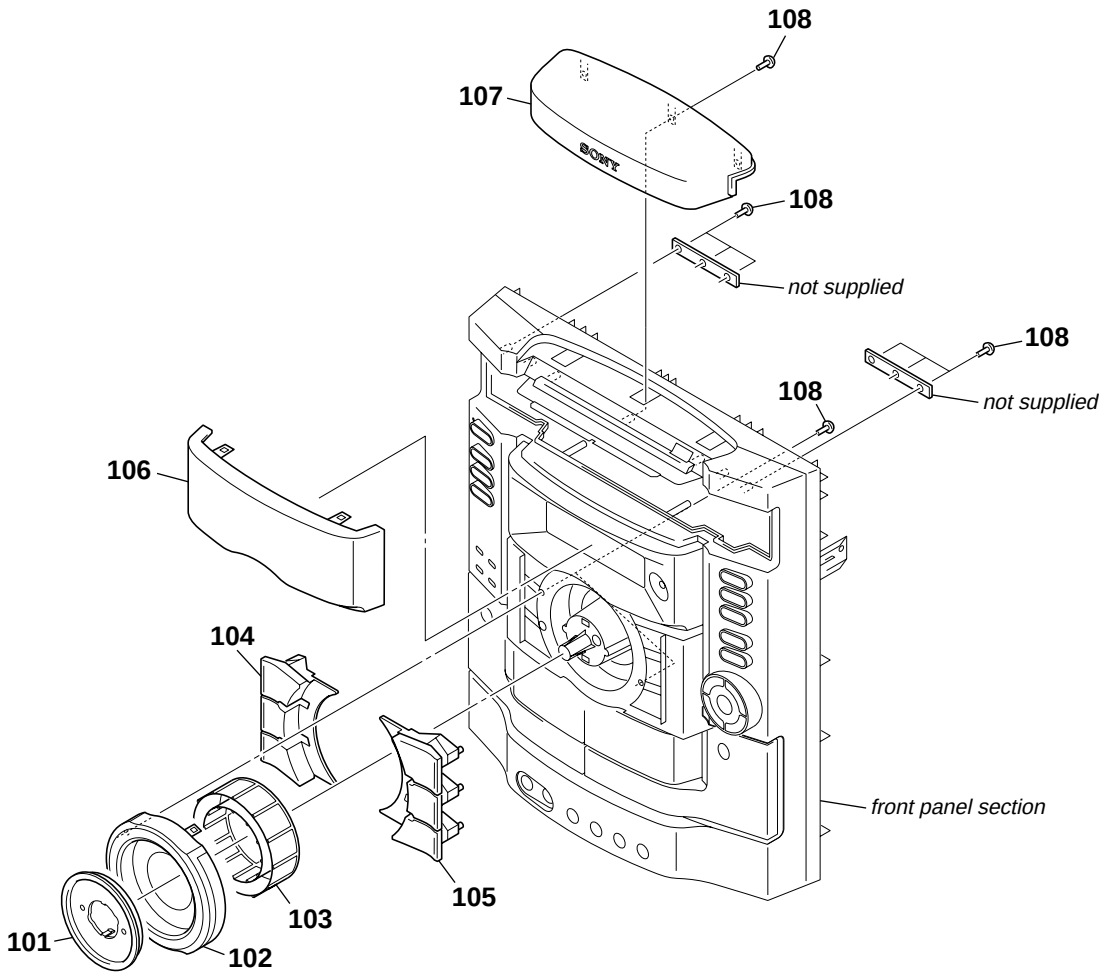

Ref. No.	Part No.	Description	Remark
101	2-658-285-03	REFLECTOR (VOL)	
102	X-2109-227-1	RING (VOL) ASSY (SERVICE)	
103	2-658-284-01	GUIDE (VOL LED)	
104	2-658-286-01	KEY (CENTER L) (▷II, I◁◁ TUNING –, ◁◁ 🗀 –)	
105	2-658-287-01	KEY (CENTER R) (□, ▷▷I TUNING +, ▷▷ 🗀 +)	
106	2-658-283-01	WINDOW (DISPLAY) (RG190: AEP)	
106	2-658-283-11	WINDOW (DISPLAY) (RG190: RU, E2, E3, E51, EA, SP, AR, AUS)	
106	2-658-283-31	WINDOW (DISPLAY) (RG290: AEP, UK)	
106	2-658-283-41	WINDOW (DISPLAY) (RG290: RU, E2, E3, E51, MX, SP, AR, AUS)	
107	X-2109-229-1	LID (TOP B) ASSY (SERVICE)	
108	4-951-620-01	SCREW (2.6X8), +BVTP	

8-4. FRONT PANEL SECTION

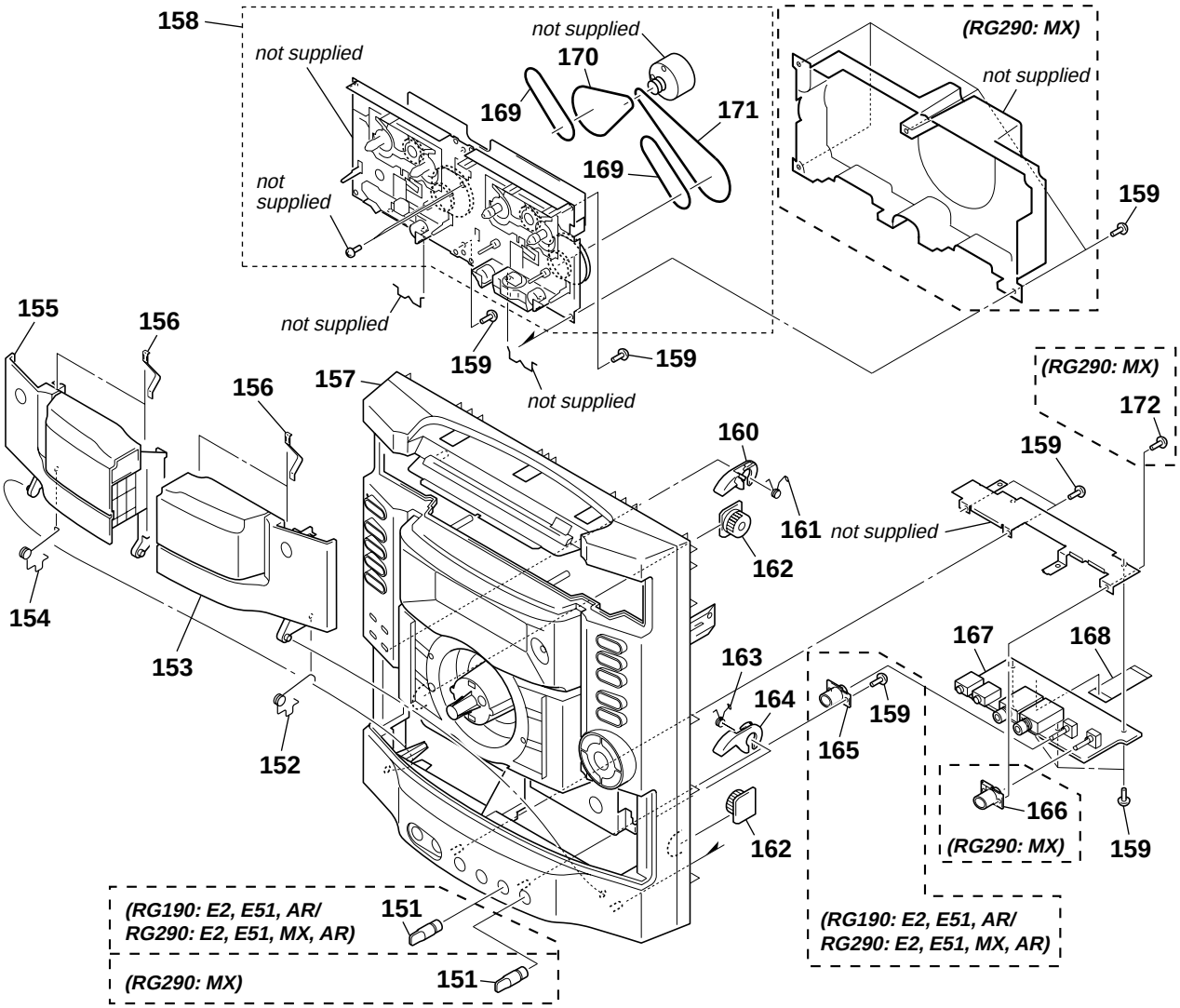

Ref. No.	Part No.	Description	Remark
151	2-638-220-01	KNOB (MIC) (RG190: E2, E51, AR/RG290: E2, E51, MX, AR)	
152	2-658-304-01	SPRING (CASS R)	
153	2-658-271-01	BOX, CASSETTE (R)	
154	2-658-303-01	SPRING (CASS L)	
155	2-658-270-01	BOX, CASSETTE (L) (RG190: E2, E51, AR/RG290: E2, E51, MX, AR)	
155	2-658-270-11	BOX, CASSETTE (L) (RG190: AEP, RU, E3, EA, SP, AUS/ RG290: AEP, UK, RU, E3, SP, AUS)	
156	4-238-631-11	TAPE SPRING	
157	X-2109-220-1	PANEL (SERVICE) ASSY, FRONT (RG190: AEP, RU, E3, EA, SP, AUS/ RG290: AEP, UK, RU, E3, SP, AUS)	
157	X-2109-221-1	PANEL (SERVICE) ASSY, FRONT (RG190: E2, E51, AR/RG290: E2, E51, AR)	
157	X-2109-222-1	PANEL (SERVICE) ASSY, FRONT (RG290: MX)	
158	1-417-656-21	MECHA DECK (CWN42FF609)	
159	4-951-620-01	SCREW (2.6X8), +BVTP	
160	4-231-825-01	CAM (B), HEART	
161	4-231-841-01	SPRING (HEART CAM-B)	
162	4-224-104-41	DAMPER	
163	4-231-836-01	SPRING (HEART CAM-A)	
164	4-231-824-01	CAM (A), HEART	
165	2-658-272-01	HOLDER (MIC 1) (RG190: E2, E51, AR/RG290: E2, E51, MX, AR)	
166	2-658-273-01	HOLDER (MIC 2) (RG290: MX)	
167	A-1159-739-A	MIC. AUX. HP BOARD, COMPLETE (RG190: AEP, RU, E3, EA, SP, AUS/ RG290: AEP, UK, RU, E3, SP, AUS)	
167	A-1159-740-A	MIC. AUX. HP BOARD, COMPLETE (RG190: E2, E51, AR/RG290: E2, E51, AR)	
167	A-1159-741-A	MIC. AUX. HP BOARD, COMPLETE	(RG290: MX)
168	1-831-772-21	CABLE, FLEXIBLE FLAT (9 CORE) (RG190: AEP, RU, E3, EA, SP, AUS/ RG290: AEP, UK, RU, E3, SP, AUS)	
168	1-831-789-21	CABLE, FLEXIBLE FLAT (13 CORE) (RG190: E2, E51, AR/RG290: E2, E51, MX, AR)	
169	4-235-777-01	BELT (FR)	
170	2-683-559-01	BELT (AF)	
171	4-683-560-01	BELT (BF)	
172	4-951-620-11	SCREW (2.6X10), +BVTP (RG290: MX)	

8-5. MAIN BOARD SECTION

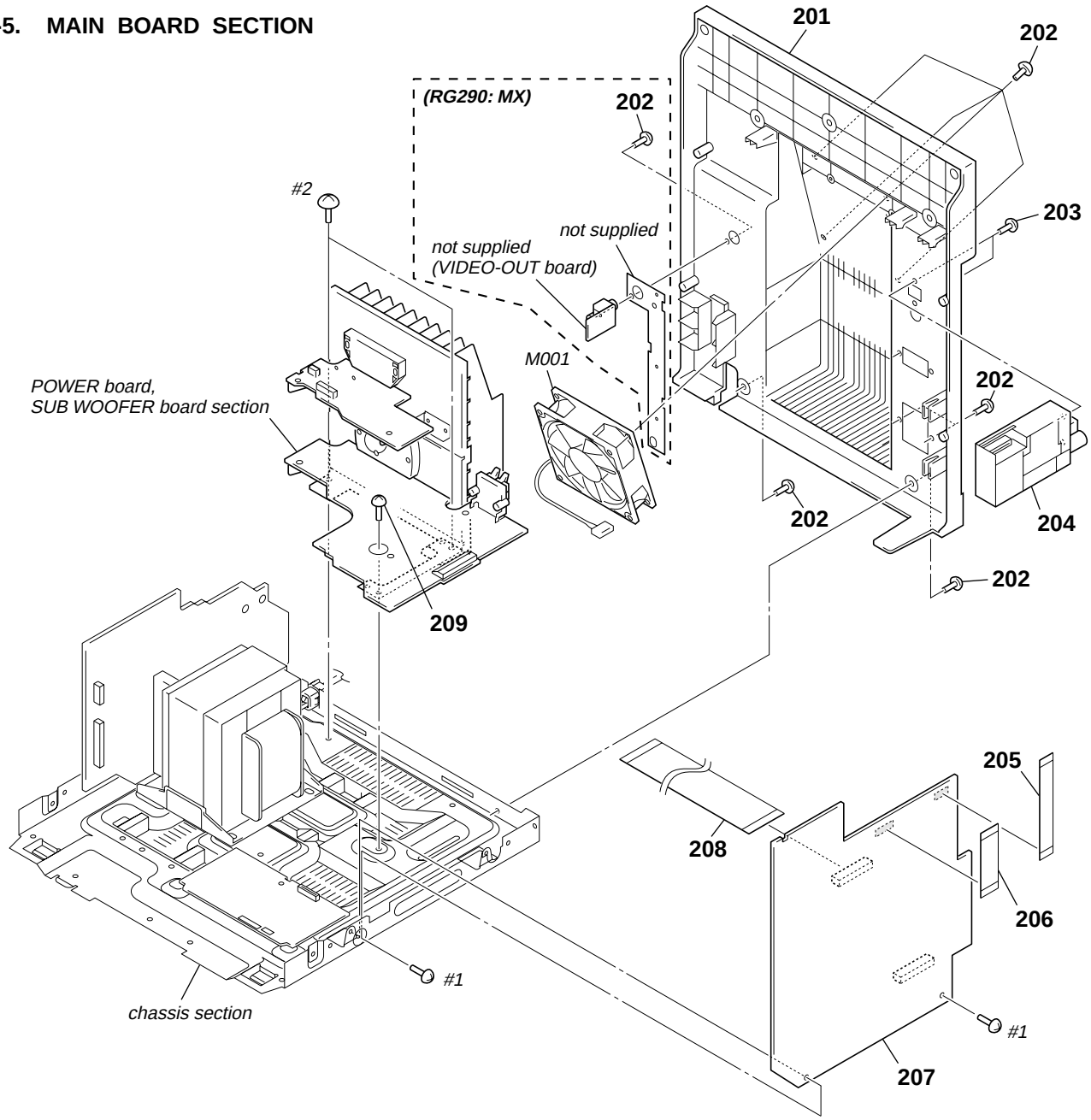

Ref. No.	Part No.	Description	Remark
201	2-658-298-21	PANEL, BACK (RG190: AEP, RU, AR, AUS/ RG290: AEP, UK, RU, AR, AUS)	
201	2-658-298-31	PANEL, BACK (RG190: E2, E3, E51, SP/ RG290: E2, E3, E51, SP)	
201	2-658-298-41	PANEL, BACK (RG290: MX)	
202	3-254-143-11	SCREW (B3), (+) BV TAPPING	
203	3-252-829-01	SCREW (B3), (+) BV TAPPING	
204	1-693-710-11	TUNER (FM/AM) (RG190: RU/RG290: RU)	
204	1-693-711-11	TUNER (FM/AM) (RG190: E2, E3, E51, EA, SP, AR, AUS/RG290: E2, E3, E51, MX, SP, AR, AUS)	
204	1-693-712-11	TUNER (FM/AM) (RG190: AEP/RG290: AEP, UK)	
205	1-831-619-21	CABLE, FLEXIBLE FLAT (11 CORE) (RG190: AEP/RG290: AEP, UK)	
205	1-831-769-21	CABLE, FLEXIBLE FLAT (9 CORE) (RG190: RU, E2, E3, E51, EA, SP, AR, AUS/ RG290: RU, E2, E3, E51, MX, SP, AR, AUS)	
206	1-831-786-21	CABLE, FLEXIBLE FLAT (13 CORE)	
207	A-1163-373-A	MAIN BOARD, COMPLETE (RG290: E3, SP, AUS)	
207	A-1163-375-A	MAIN BOARD, COMPLETE (RG290: E2, E51, AR)	
207	A-1163-376-A	MAIN BOARD, COMPLETE (RG290: MX)	
207	A-1163-371-A	MAIN BOARD, COMPLETE (RG290: AEP, UK)	
207	A-1163-372-A	MAIN BOARD, COMPLETE (RG290: RU)	
207	A-1163-423-A	MAIN BOARD, COMPLETE (RG190: AEP)	
207	A-1163-424-A	MAIN BOARD, COMPLETE (RG190: RU)	
207	A-1163-425-A	MAIN BOARD, COMPLETE (RG190: E3, SP, AUS)	
207	A-1163-426-A	MAIN BOARD, COMPLETE (RG190: EA)	
207	A-1163-427-A	MAIN BOARD, COMPLETE (RG190: E2, E51, AR)	
208	1-831-771-21	CABLE, FLEXIBLE FLAT (23 CORE) (EXCEPT RG290: MX)	
208	1-832-043-21	CABLE, FLEXIBLE FLAT (31 CORE) (RG290: MX)	
209	3-077-331-01	+BV3 (3-CR)	
M001	1-787-319-12	FAN, DC	
#1	7-685-646-79	SCREW +BVTP 3X8 TYPE2 IT-3	
#2	7-685-881-09	SCREW +BVTT 4X8 (S)	

8-6. POWER BOARD, SUB WOOFER BOARD SECTION

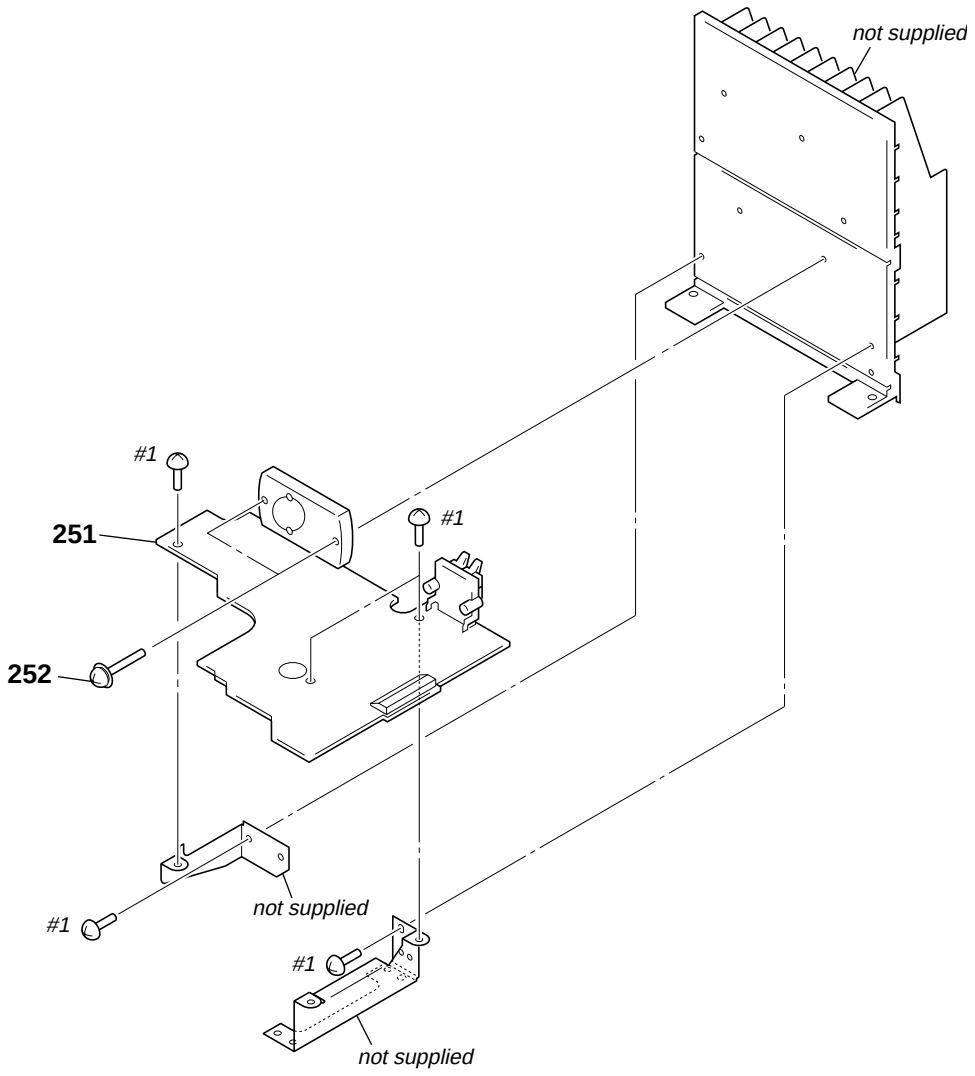

Ref. No.	Part No.	Description	Remark
251	A-1163-402-A	POWER BOARD, COMPLETE	(RG290: AEP, UK, RU)
251	A-1163-403-A	POWER BOARD, COMPLETE	(RG290: E3, SP, AUS)
251	A-1163-404-A	POWER BOARD, COMPLETE	(RG290: E2, E51, MX, AR)
251	A-1163-446-A	POWER BOARD, COMPLETE (RG190: AEP, RU)	
251	A-1163-447-A	POWER BOARD, COMPLETE	(RG190: E3, EA, SP, AUS)
251	A-1163-448-A	POWER BOARD, COMPLETE	(RG190: E2, E51, AR)
252	3-905-609-31	SCREW (TRANSISTOR)	
#1	7-685-646-79	SCREW +BVTP 3X8 TYPE2 IT-3	

8-7. CHASSIS SECTION

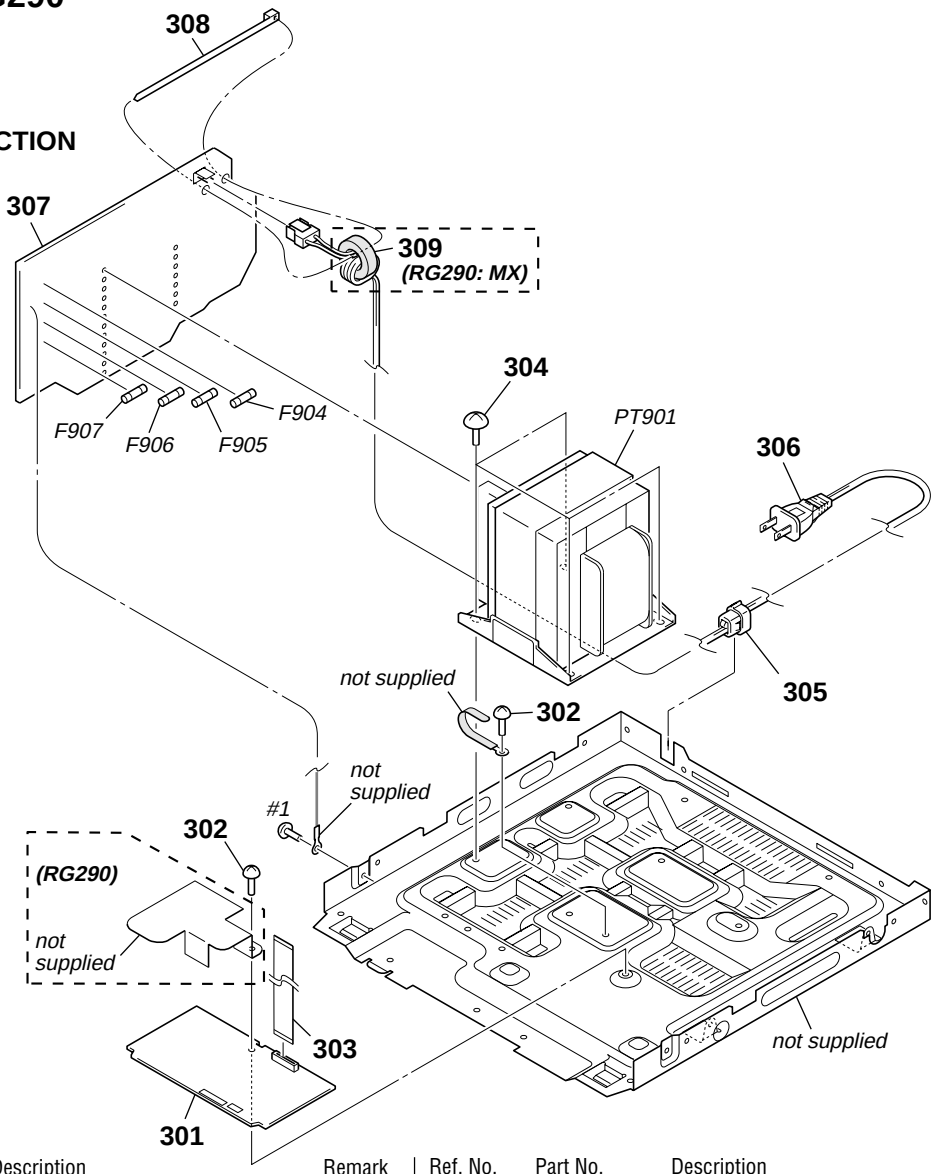

Ref. No.	Part No.	Description	Remark
301	A-1171-482-A	DECK BOARD, COMPLETE	
302	3-077-331-01	+BV3 (3-CR)	
303	1-831-928-21	CABLE, FLEXIBLE FLAT (11 CORE)	
304	4-900-386-01	SCREW	
305	3-703-244-00	BUSHING (2104), CORD (RG190: AEP, RU, E51, EA, SP, AR, AUS/ RG290: AEP, UK, RU, E51, SP, AR, AUS)	
* 305	3-703-571-12	BUSHING (S) (4516), CORD (RG190: E2, E3/RG290: E2, E3, MX)	
⚠306	1-775-790-71	CORD, POWER (RG190: AUS/RG290: AUS)	
⚠306	1-769-744-81	CORD, POWER (RG190: EA/RG290: UK)	
⚠306	1-827-226-31	CORD, POWER (RG190: E2, E3/RG290: E2, E3, MX)	
⚠306	1-829-387-11	CORD, POWER (RG190: AR/RG290: AR)	
⚠306	1-830-188-11	CORD, POWER (RG190: AEP, RU, E51, SP/ RG290: AEP, RU, E51, SP)	
307	A-1163-242-A	TRANSFORMER BOARD, COMPLETE (RG290: AEP, UK, RU)	
307	A-1163-243-A	TRANSFORMER BOARD, COMPLETE (RG290: E2, E3, E51, SP)	
307	A-1163-244-A	TRANSFORMER BOARD, COMPLETE (RG290: AUS)	
307	A-1163-246-A	TRANSFORMER BOARD, COMPLETE (RG290: AR)	
307	A-1163-247-A	TRANSFORMER BOARD, COMPLETE (RG290: MX)	
307	A-1163-460-A	TRANSFORMER BOARD, COMPLETE (RG190: AEP, RU)	
307	A-1163-461-A	TRANSFORMER BOARD, COMPLETE (RG190: E2, E3, E51, SP)	
307	A-1163-463-A	TRANSFORMER BOARD, COMPLETE (RG190: AUS)	
307	A-1163-464-A	TRANSFORMER BOARD, COMPLETE (RG190: EA)	
307	A-1163-465-A	TRANSFORMER BOARD, COMPLETE (RG190: AR)	
308	3-701-748-00	CLAMP	
309	1-500-868-11	CORE, FERRITE (RG290: MX)	
⚠F904	1-532-506-33	FUSE (T6.3AL/250V) (RG190)	
⚠F904	1-533-949-33	FUSE, CYLINDRICAL (TIME LUG) (T8AL/250V) (RG290)	
⚠F905	1-532-506-33	FUSE (T6.3AL/250V) (RG190)	
⚠F905	1-533-949-33	FUSE, CYLINDRICAL (TIME LUG) (T8AL/250V) (RG290)	
⚠F906	1-532-464-33	FUSE (T2.5AL/250V) (RG190: AEP, RU)	
⚠F906	1-532-465-33	FUSE (T3.15AL/250V) (RG190: E2, E3, E51, EA, SP, AR, AUS/RG290)	
⚠F907	1-532-464-33	FUSE (T2.5AL/250V) (RG190: AEP, RU)	
⚠F907	1-532-465-33	FUSE (T3.15AL/250V) (RG190: E2, E3, E51, EA, SP, AR, AUS/RG290)	
⚠PT901	1-443-921-11	TRANSFORMER, POWER (RG290: AEP, UK, RU)	
⚠PT901	1-443-932-11	TRANSFORMER, POWER (RG290: MX)	
⚠PT901	1-443-934-11	TRANSFORMER, POWER (RG190: E2, E3, E51, SP, AR, AUS)	
⚠PT901	1-443-936-11	TRANSFORMER, POWER (RG190: AEP, RU)	
⚠PT901	1-443-937-11	TRANSFORMER, POWER (RG290: E2, E3, E51, SP, AR, AUS)	
⚠PT901	1-443-938-11	TRANSFORMER, POWER (RG190: EA)	
#1	7-685-646-79	SCREW, +BVTP 3X8 TYPE IT-3	

8-8. CD MECHANISM DECK SECTION-1 (CDM74KF-K6BD83S) (EXCEPT Mexican model)/ (CDM74KF-F1BD84) (Mexican model)

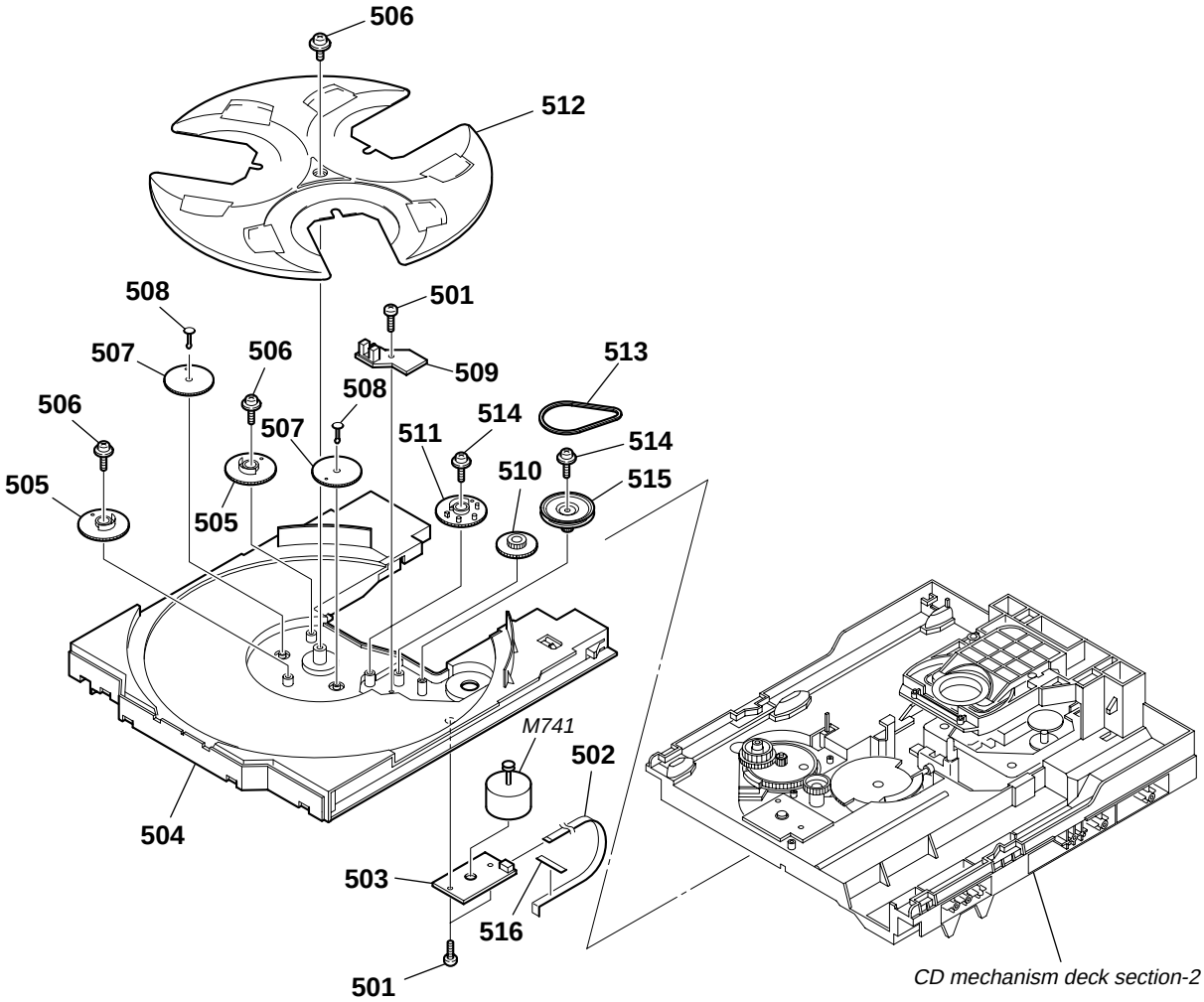

Ref. No.	Part No.	Description	Remark
501	4-218-253-62	SCREW (M2.6), +BTTP	
502	1-828-938-51	WIRE (FLAT TYPE) (5 CORE)	
503	1-687-134-12	MOTOR (TB) BOARD	
504	4-243-815-11	TABLE (LOADING)	
505	4-245-571-02	GEAR (STOPPER)	
506	4-218-252-61	SCREW (+PTPWH M2.6), FLOATING	
507	4-245-570-01	GEAR (JOINT)	
508	4-245-572-01	BUSHING (GEAR)	
509	1-687-132-12	SENSOR BOARD	

Ref. No.	Part No.	Description	Remark
510	4-243-820-01	GEAR (TABLE)	
511	4-243-819-01	GEAR (GENEVA)	
512	4-243-816-11	TRAY	
513	4-243-823-11	BELT (TABLE)	
514	4-985-672-01	SCREW (+PTPWH M2.6), FLOATING	
515	4-243-821-01	PULLEY (TABLE)	
516	3-231-598-01	SHEET (BA)	
M741	A-1108-965-A	MOTOR ASSY, TABLE	

8-9. CD MECHANISM DECK SECTION-2 (CDM74KF-K6BD83S) (EXCEPT Mexican model)/ (CDM74KF-F1BD84) (Mexican model)

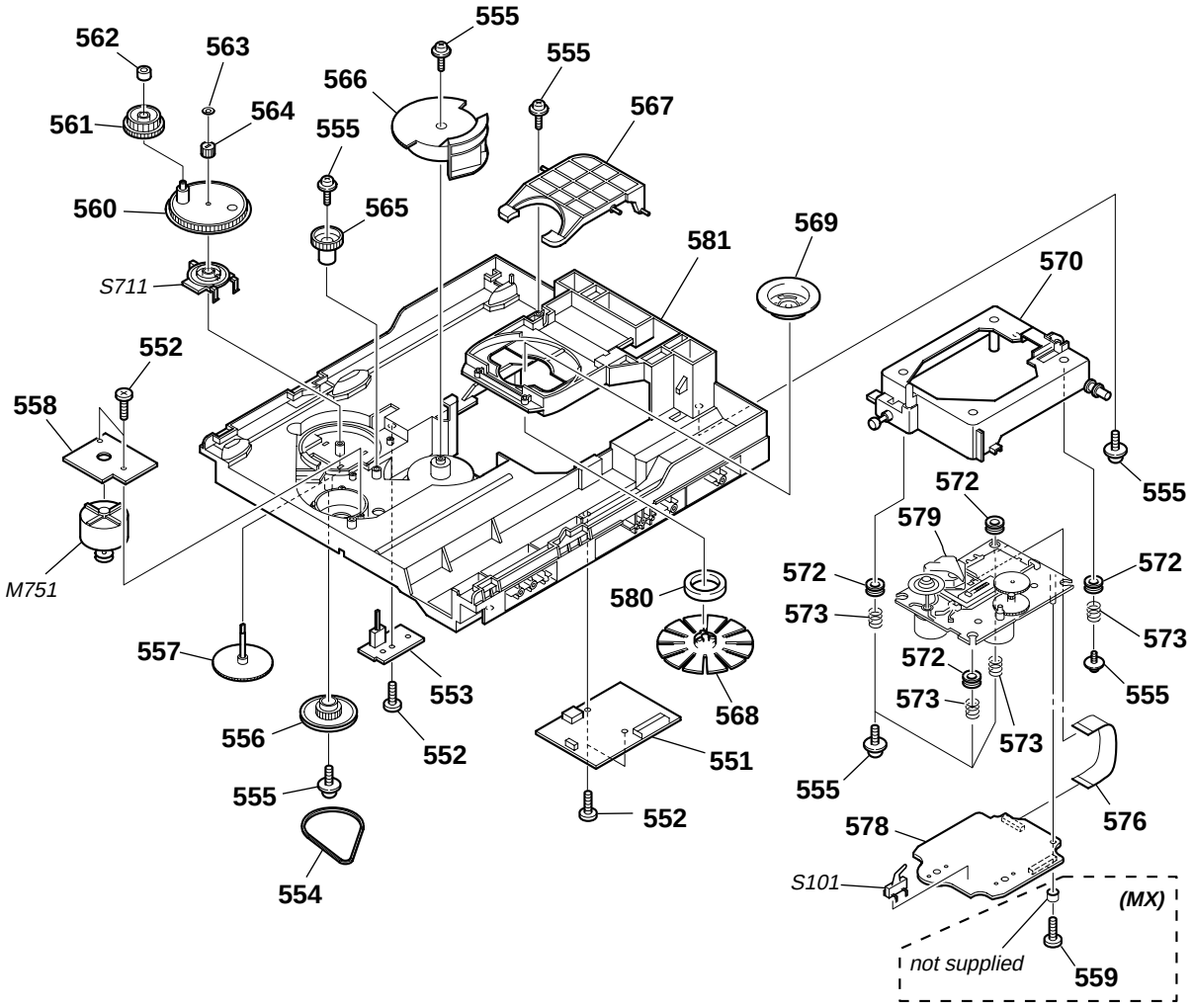

Ref. No.	Part No.	Description	Remark
551	A-1103-756-B	DRIVER BOARD, COMPLETE	
552	4-218-253-52	SCREW (M2.6), +BTTP	
553	1-687-669-12	SW BOARD	
554	4-244-034-11	BELT (LOADING)	
555	4-985-672-01	SCREW (+PTPWH M2.6), FLOATING	
556	4-225-844-01	GEAR (LOADING A)	
557	4-224-613-11	GEAR (SHAFT)	
558	1-687-133-12	MOTOR (LD) BOARD	
559	3-087-053-01	+BVTP2.6 (3CR) (MX)	
560	4-244-108-01	GEAR, SWING	
561	4-224-609-01	GEAR (LOADING C)	
562	4-224-608-01	COLLAR, SWING	
563	3-016-533-11	WASHER (FR), STOPPER	
564	4-224-611-01	GEAR (LOADING B)	
565	4-224-606-01	GEAR (RV)	
566	4-243-818-01	GEAR (U/D)	
567	4-243-822-02	LEVER (LIFTER)	
568	X-2102-809-2	PULLEY (KH) ASSY	

Ref. No.	Part No.	Description	Remark
569	4-231-189-01	PULLEY (B), CHUCKING	
570	X-2055-190-1	HOLDER (213) ASSY	
572	4-227-549-11	INSULATOR	
573	4-227-045-31	SPRING (INSULATOR), COIL	
576	1-832-404-21	CABLE, FLEXIBLE FLAT (16 CORE)	
578	A-1095-982-A	BD BOARD, COMPLETE (MX)	
578	A-1134-279-A	CD BOARD, COMPLETE (EXCEPT MX)	
⚠579	8-820-244-01	OPTICAL PICK-UP BLOCK (KSM-215DCP/C2NP) (MX)	
⚠579	A-4735-357-A	OPTICAL PICK-UP BLOCK (KSM-213DHAP) (EXCEPT MX)	
580	1-471-035-21	MAGNET ASSY	
581	4-243-817-22	CHASSIS	
M751	A-1108-966-A	MOTOR ASSY, LOADING	
S101	1-771-853-11	SWITCH, DETECTION (LIMIT)	
S711	1-477-680-12	ENCODER, ROTARY (DISC TABLE ADDRESS DETECT)	

SECTION 9
ELECTRICAL PARTS LIST

NOTE:

- Due to standardization, replacements in the parts list may be different from the parts specified in the diagrams or the components used on the set.
- -XX and -X mean standardized parts, so they may have some difference from the original one.
- RESISTORS
  All resistors are in ohms.
  METAL: Metal-film resistor.
  METAL OXIDE: Metal oxide-film resistor.
  F: nonflammable
- Abbreviation
  AUS : Australian model
  AR : Argentina model
  E2 : 120V AC area in E model
  E3 : 240V AC area in E model
  E51 : Chilean and Peruvian models
  EA : Saudi Arabia model
  MX : Mexican model
  RU : Russian model
  SP : Singapore model
- Items marked "*" are not stocked since they are seldom required for routine service. Some delay should be anticipated when ordering these items.
- SEMICONDUCTORS
  In each case, u: µ, for example:
  uA... : µA... uPA... : µPA...
  uPB... : µPB... uPC... : µPC...
  uPD... : µPD...
- CAPACITORS
  uF: µF
- COILS
  uH: µH

The components identified by mark ⚠ or dotted line with mark ⚠ are critical for safety.
Replace only with part number specified.

When indicating parts by reference number, please include the board.

Ref. No.	Part No.	Description			Remark
	A-1095-982-A	BD BOARD, COMPLETE (RG290: MX)			
		**********			
		< CAPACITOR >			
C10	1-165-989-11	CERAMIC CHIP	10uF	10%	6.3V
C11	1-165-989-11	CERAMIC CHIP	10uF	10%	6.3V
C14	1-164-360-11	CERAMIC CHIP	0.1uF		16V
C15	1-164-360-11	CERAMIC CHIP	0.1uF		16V
C16	1-115-156-11	CERAMIC CHIP	1uF		10V
C17	1-126-246-11	ELECT CHIP	220uF	20%	4V
C18	1-162-964-11	CERAMIC CHIP	0.001uF	10%	50V
C111	1-162-967-11	CERAMIC CHIP	0.0033uF	10%	50V
C112	1-162-962-11	CERAMIC CHIP	470PF	10%	50V
C113	1-162-967-11	CERAMIC CHIP	0.0033uF	10%	50V
C114	1-162-962-11	CERAMIC CHIP	470PF	10%	50V
C115	1-164-360-11	CERAMIC CHIP	0.1uF		16V
C116	1-128-995-21	ELECT CHIP	100uF	20%	10V
C122	1-107-826-11	CERAMIC CHIP	0.1uF	10%	16V
C123	1-107-826-11	CERAMIC CHIP	0.1uF	10%	16V
C124	1-162-959-11	CERAMIC CHIP	330PF	5%	50V
C125	1-164-360-11	CERAMIC CHIP	0.1uF		16V
C131	1-162-927-11	CERAMIC CHIP	100PF	5%	50V
C132	1-117-863-11	CERAMIC CHIP	0.47uF	10%	6.3V
C133	1-162-970-11	CERAMIC CHIP	0.01uF	10%	25V
C134	1-164-360-11	CERAMIC CHIP	0.1uF		16V
C141	1-107-826-11	CERAMIC CHIP	0.1uF	10%	16V
C142	1-162-965-11	CERAMIC CHIP	0.0015uF	10%	50V
C143	1-164-360-11	CERAMIC CHIP	0.1uF		16V
C151	1-128-995-21	ELECT CHIP	100uF	20%	10V
C161	1-164-360-11	CERAMIC CHIP	0.1uF		16V
C162	1-164-360-11	CERAMIC CHIP	0.1uF		16V
C163	1-164-360-11	CERAMIC CHIP	0.1uF		16V
C171	1-162-919-11	CERAMIC CHIP	22PF	5%	50V
C172	1-162-920-11	CERAMIC CHIP	27PF	5%	50V
C174	1-164-360-11	CERAMIC CHIP	0.1uF		16V
C181	1-164-360-11	CERAMIC CHIP	0.1uF		16V
C182	1-164-360-11	CERAMIC CHIP	0.1uF		16V
C183	1-124-778-00	ELECT CHIP	22uF	20%	6.3V
C184	1-124-778-00	ELECT CHIP	22uF	20%	6.3V
C185	1-162-962-11	CERAMIC CHIP	470PF	10%	50V
C186	1-162-962-11	CERAMIC CHIP	470PF	10%	50V
C194	1-164-360-11	CERAMIC CHIP	0.1uF		16V
C195	1-164-360-11	CERAMIC CHIP	0.1uF		16V
C196	1-164-360-11	CERAMIC CHIP	0.1uF		16V
C201	1-128-995-21	ELECT CHIP	100uF	20%	10V
C203	1-128-995-21	ELECT CHIP	100uF	20%	10V
C209	1-162-970-11	CERAMIC CHIP	0.01uF	10%	25V
C210	1-107-826-11	CERAMIC CHIP	0.1uF	10%	16V
C211	1-164-230-11	CERAMIC CHIP	220PF	5%	50V
C212	1-162-919-11	CERAMIC CHIP	22PF	5%	50V
C213	1-162-919-11	CERAMIC CHIP	22PF	5%	50V
C251	1-162-969-11	CERAMIC CHIP	0.0068uF	10%	25V
C252	1-164-360-11	CERAMIC CHIP	0.1uF		16V
C255	1-164-360-11	CERAMIC CHIP	0.1uF		16V
C257	1-164-360-11	CERAMIC CHIP	0.1uF		16V
C258	1-164-360-11	CERAMIC CHIP	0.1uF		16V
C259	1-164-360-11	CERAMIC CHIP	0.1uF		16V
C260	1-128-394-11	ELECT CHIP	220uF	20%	10V
C302	1-164-360-11	CERAMIC CHIP	0.1uF		16V
C303	1-164-360-11	CERAMIC CHIP	0.1uF		16V
C305	1-126-246-11	ELECT CHIP	220uF	20%	4V
C306	1-164-360-11	CERAMIC CHIP	0.1uF		16V
C307	1-164-360-11	CERAMIC CHIP	0.1uF		16V
C308	1-126-208-21	ELECT CHIP	47uF	20%	4V
C309	1-164-360-11	CERAMIC CHIP	0.1uF		16V
C310	1-164-360-11	CERAMIC CHIP	0.1uF		16V
C311	1-164-360-11	CERAMIC CHIP	0.1uF		16V
C312	1-164-360-11	CERAMIC CHIP	0.1uF		16V
C313	1-164-360-11	CERAMIC CHIP	0.1uF		16V
C314	1-126-208-21	ELECT CHIP	47uF	20%	4V
C315	1-107-826-11	CERAMIC CHIP	0.1uF	10%	16V
C316	1-162-966-11	CERAMIC CHIP	0.0022uF	10%	50V
C317	1-162-970-11	CERAMIC CHIP	0.01uF	10%	25V
C318	1-162-970-11	CERAMIC CHIP	0.01uF	10%	25V
C320	1-162-964-11	CERAMIC CHIP	0.001uF	10%	50V
		< CONNECTOR >			
CN101	1-770-425-51	CONNECTOR, FFC/FPC 16P			
CN201	1-784-879-51	CONNECTOR, FFC (LIF (NON-ZIF)) 31P			
		< FERRITE BEAD >			
FB301	1-500-445-21	FERRITE, EMI (SMD) (2012)			
		< IC >			
IC101	8-752-425-12	IC CXD3059AR			
IC251	6-705-808-01	IC BA5947FM-E2			

BD CD

Ref. No.	Part No.	Description			Remark
IC301	6-705-365-01	IC TC94A34FG-002			
IC303	6-705-807-01	IC BH15FB1WG			
		< TRANSISTOR >			
Q10	6-551-120-01	TRANSISTOR	2SA2119K		
		< RESISTOR/FERRITE BEAD >			
R10	1-216-791-11	METAL CHIP	3.3	5%	1/10W
R11	1-216-864-11	SHORT CHIP	0		
R12	1-216-845-11	METAL CHIP	100K	5%	1/10W
R13	1-218-446-11	METAL CHIP	1	5%	1/10W
R111	1-216-821-11	METAL CHIP	1K	5%	1/10W
R112	1-216-835-11	METAL CHIP	15K	5%	1/10W
R113	1-216-821-11	METAL CHIP	1K	5%	1/10W
R114	1-216-835-11	METAL CHIP	15K	5%	1/10W
R121	1-216-835-11	METAL CHIP	15K	5%	1/10W
R131	1-216-857-11	METAL CHIP	1M	5%	1/10W
R132	1-216-833-11	METAL CHIP	10K	5%	1/10W
R133	1-216-848-11	METAL CHIP	180K	5%	1/10W
R141	1-216-829-11	METAL CHIP	4.7K	5%	1/10W
R142	1-216-821-11	METAL CHIP	1K	5%	1/10W
R143	1-216-827-11	METAL CHIP	3.3K	5%	1/10W
R151	1-216-864-11	SHORT CHIP	0		
R161	1-216-809-11	METAL CHIP	100	5%	1/10W
R162	1-216-841-11	METAL CHIP	47K	5%	1/10W
R163	1-216-809-11	METAL CHIP	100	5%	1/10W
R165	1-216-864-11	SHORT CHIP	0		
R171	1-216-817-11	METAL CHIP	470	5%	1/10W
R172	1-216-857-11	METAL CHIP	1M	5%	1/10W
R173	1-216-295-00	SHORT CHIP	0		
R181	1-216-809-11	METAL CHIP	100	5%	1/10W
R182	1-216-809-11	METAL CHIP	100	5%	1/10W
R191	1-216-864-11	SHORT CHIP	0		
R201	1-500-445-21	FERRITE, EMI (SMD) (2012)			
R203	1-216-864-11	SHORT CHIP	0		
R204	1-216-864-11	SHORT CHIP	0		
R205	1-216-864-11	SHORT CHIP	0		
R251	1-216-833-11	METAL CHIP	10K	5%	1/10W
R252	1-216-837-11	METAL CHIP	22K	5%	1/10W
R253	1-216-833-11	METAL CHIP	10K	5%	1/10W
R301	1-216-845-11	METAL CHIP	100K	5%	1/10W
R302	1-216-833-11	METAL CHIP	10K	5%	1/10W
R303	1-216-845-11	METAL CHIP	100K	5%	1/10W
R305	1-216-845-11	METAL CHIP	100K	5%	1/10W
R306	1-216-864-11	SHORT CHIP	0		
R307	1-216-833-11	METAL CHIP	10K	5%	1/10W
R313	1-216-813-11	METAL CHIP	220	5%	1/10W
R351	1-216-809-11	METAL CHIP	100	5%	1/10W
R352	1-216-809-11	METAL CHIP	100	5%	1/10W
R353	1-216-809-11	METAL CHIP	100	5%	1/10W
R354	1-216-809-11	METAL CHIP	100	5%	1/10W
R401	1-216-809-11	METAL CHIP	100	5%	1/10W
R402	1-216-809-11	METAL CHIP	100	5%	1/10W
R403	1-216-809-11	METAL CHIP	100	5%	1/10W
R404	1-216-809-11	METAL CHIP	100	5%	1/10W
R405	1-216-809-11	METAL CHIP	100	5%	1/10W
R406	1-216-809-11	METAL CHIP	100	5%	1/10W
R407	1-216-809-11	METAL CHIP	100	5%	1/10W
R408	1-216-809-11	METAL CHIP	100	5%	1/10W
R409	1-216-809-11	METAL CHIP	100	5%	1/10W
R410	1-216-809-11	METAL CHIP	100	5%	1/10W
R411	1-216-809-11	METAL CHIP	100	5%	1/10W
R412	1-216-809-11	METAL CHIP	100	5%	1/10W
R419	1-216-809-11	METAL CHIP	100	5%	1/10W
R421	1-216-809-11	METAL CHIP	100	5%	1/10W
R422	1-216-809-11	METAL CHIP	100	5%	1/10W
R423	1-216-809-11	METAL CHIP	100	5%	1/10W
		< VIBRATOR >			
X171	1-767-408-21	VIBRATOR, CRYSTAL (16.9344MHz)			
**********					
	A-1134-279-A	CD BOARD, COMPLETE (EXCEPT RG290: MX)			
		**********			
		< CAPACITOR >			
C101	1-162-919-11	CERAMIC CHIP	22PF	5%	50V
C102	1-162-919-11	CERAMIC CHIP	22PF	5%	50V
C103	1-162-919-11	CERAMIC CHIP	22PF	5%	50V
C104	1-164-230-11	CERAMIC CHIP	220PF	5%	50V
C105	1-162-919-11	CERAMIC CHIP	22PF	5%	50V
C107	1-164-230-11	CERAMIC CHIP	220PF	5%	50V
C108	1-164-230-11	CERAMIC CHIP	220PF	5%	50V
C109	1-164-230-11	CERAMIC CHIP	220PF	5%	50V
C110	1-164-230-11	CERAMIC CHIP	220PF	5%	50V
C111	1-164-230-11	CERAMIC CHIP	220PF	5%	50V
C112	1-162-919-11	CERAMIC CHIP	22PF	5%	50V
C113	1-162-919-11	CERAMIC CHIP	22PF	5%	50V
C201	1-128-995-21	ELECT CHIP	100uF	20%	10V
C202	1-164-360-11	CERAMIC CHIP	0.1uF		16V
C203	1-128-995-21	ELECT CHIP	100uF	20%	10V
C204	1-164-360-11	CERAMIC CHIP	0.1uF		16V
C205	1-164-360-11	CERAMIC CHIP	0.1uF		16V
C206	1-164-360-11	CERAMIC CHIP	0.1uF		16V
C207	1-128-995-21	ELECT CHIP	100uF	20%	10V
C208	1-164-360-11	CERAMIC CHIP	0.1uF		16V
C210	1-164-360-11	CERAMIC CHIP	0.1uF		16V
C213	1-164-360-11	CERAMIC CHIP	0.1uF		16V
C214	1-164-360-11	CERAMIC CHIP	0.1uF		16V
C215	1-164-360-11	CERAMIC CHIP	0.1uF		16V
C217	1-164-360-11	CERAMIC CHIP	0.1uF		16V
C218	1-164-360-11	CERAMIC CHIP	0.1uF		16V
C219	1-164-360-11	CERAMIC CHIP	0.1uF		16V
C220	1-164-360-11	CERAMIC CHIP	0.1uF		16V
C221	1-164-360-11	CERAMIC CHIP	0.1uF		16V
C222	1-164-360-11	CERAMIC CHIP	0.1uF		16V
C223	1-164-360-11	CERAMIC CHIP	0.1uF		16V
C224	1-164-360-11	CERAMIC CHIP	0.1uF		16V
C226	1-165-908-11	CERAMIC CHIP	1uF	10%	10V
C227	1-165-908-11	CERAMIC CHIP	1uF	10%	10V
C230	1-162-927-11	CERAMIC CHIP	100PF	5%	50V
C232	1-164-360-11	CERAMIC CHIP	0.1uF		16V
C251	1-164-315-11	CERAMIC CHIP	470PF	5%	50V
C252	1-162-968-11	CERAMIC CHIP	0.0047uF	10%	50V
C253	1-164-315-11	CERAMIC CHIP	470PF	5%	50V
C254	1-162-968-11	CERAMIC CHIP	0.0047uF	10%	50V

Ref. No.	Part No.	Description			Remark
C256	1-107-826-11	CERAMIC CHIP	0.1uF	10%	16V
C257	1-107-826-11	CERAMIC CHIP	0.1uF	10%	16V
C258	1-164-230-11	CERAMIC CHIP	220PF	5%	50V
C260	1-117-863-11	CERAMIC CHIP	0.47uF	10%	6.3V
C261	1-162-970-11	CERAMIC CHIP	0.01uF	10%	25V
C264	1-162-964-11	CERAMIC CHIP	0.001uF	10%	50V
C265	1-107-826-11	CERAMIC CHIP	0.1uF	10%	16V
C266	1-162-915-11	CERAMIC CHIP	10PF	0.5PF	50V
C267	1-162-910-11	CERAMIC CHIP	5PF	0.25PF	50V
C268	1-162-915-11	CERAMIC CHIP	10PF	0.5PF	50V
C271	1-107-826-11	CERAMIC CHIP	0.1uF	10%	16V
C272	1-164-360-11	CERAMIC CHIP	0.1uF		16V
C273	1-164-315-11	CERAMIC CHIP	470PF	5%	50V
C274	1-107-826-11	CERAMIC CHIP	0.1uF	10%	16V
C275	1-162-910-11	CERAMIC CHIP	5PF	0.25PF	50V
C276	1-165-908-11	CERAMIC CHIP	1uF	10%	10V
C277	1-165-908-11	CERAMIC CHIP	1uF	10%	10V
C291	1-164-315-11	CERAMIC CHIP	470PF	5%	50V
C292	1-164-315-11	CERAMIC CHIP	470PF	5%	50V
C301	1-164-360-11	CERAMIC CHIP	0.1uF		16V
C303	1-137-710-11	CERAMIC CHIP	10uF	20%	6.3V
C304	1-165-908-11	CERAMIC CHIP	1uF	10%	10V
C321	1-162-964-11	CERAMIC CHIP	0.001uF	10%	50V
C322	1-165-908-11	CERAMIC CHIP	1uF	10%	10V
C323	1-128-995-21	ELECT CHIP	100uF	20%	10V
C401	1-128-394-11	ELECT CHIP	220uF	20%	10V
C404	1-164-360-11	CERAMIC CHIP	0.1uF		16V
C405	1-164-360-11	CERAMIC CHIP	0.1uF		16V
C406	1-164-360-11	CERAMIC CHIP	0.1uF		16V
C424	1-164-360-11	CERAMIC CHIP	0.1uF		16V
C451	1-165-176-11	CERAMIC CHIP	0.047uF	10%	16V
		< CONNECTOR >			
CN102	1-770-706-21	CONNECTOR, FFC/FPC 23P			
CN301	1-770-425-51	CONNECTOR, FFC/FPC 16P			
		< IC >			
IC201	8-753-246-30	IC CXD3014A-201R			
IC203	6-709-050-01	IC BH18LB1WG-TR			
IC402	6-705-808-01	IC BA5947FM-E2			
		< TRANSISTOR >			
Q321	6-551-120-01	TRANSISTOR	2SA2119K		
		< RESISTOR/FERRITE BEAD >			
R101	1-216-809-11	METAL CHIP	100	5%	1/10W
R102	1-216-809-11	METAL CHIP	100	5%	1/10W
R103	1-216-809-11	METAL CHIP	100	5%	1/10W
R104	1-216-809-11	METAL CHIP	100	5%	1/10W
R105	1-216-809-11	METAL CHIP	100	5%	1/10W
R107	1-216-809-11	METAL CHIP	100	5%	1/10W
R108	1-216-809-11	METAL CHIP	100	5%	1/10W
R109	1-216-809-11	METAL CHIP	100	5%	1/10W
R110	1-216-809-11	METAL CHIP	100	5%	1/10W
R111	1-216-809-11	METAL CHIP	100	5%	1/10W
R112	1-216-809-11	METAL CHIP	100	5%	1/10W

Ref. No.	Part No.	Description			Remark
R113	1-216-809-11	METAL CHIP	100	5%	1/10W
R201	1-216-295-00	SHORT CHIP	0		
R202	1-216-295-00	SHORT CHIP	0		
R203	1-500-445-21	FERRITE, EMI (SMD) (2012)			
R207	1-216-295-00	SHORT CHIP	0		
R250	1-216-857-11	METAL CHIP	1M	5%	1/10W
R252	1-216-833-11	METAL CHIP	10K	5%	1/10W
R253	1-216-821-11	METAL CHIP	1K	5%	1/10W
R254	1-216-833-11	METAL CHIP	10K	5%	1/10W
R255	1-216-821-11	METAL CHIP	1K	5%	1/10W
R256	1-216-837-11	METAL CHIP	22K	5%	1/10W
R257	1-216-845-11	METAL CHIP	100K	5%	1/10W
R258	1-216-849-11	METAL CHIP	220K	5%	1/10W
R260	1-216-864-11	SHORT CHIP	0		
R265	1-216-829-11	METAL CHIP	4.7K	5%	1/10W
R266	1-216-821-11	METAL CHIP	1K	5%	1/10W
R267	1-216-829-11	METAL CHIP	4.7K	5%	1/10W
R268	1-216-833-11	METAL CHIP	10K	5%	1/10W
R270	1-216-821-11	METAL CHIP	1K	5%	1/10W
R271	1-216-857-11	METAL CHIP	1M	5%	1/10W
R275	1-216-809-11	METAL CHIP	100	5%	1/10W
R276	1-216-841-11	METAL CHIP	47K	5%	1/10W
R277	1-216-809-11	METAL CHIP	100	5%	1/10W
R278	1-216-809-11	METAL CHIP	100	5%	1/10W
R280	1-216-864-11	SHORT CHIP	0		
R291	1-216-809-11	METAL CHIP	100	5%	1/10W
R292	1-216-809-11	METAL CHIP	100	5%	1/10W
R321	1-216-789-11	METAL CHIP	2.2	5%	1/10W
R322	1-216-789-11	METAL CHIP	2.2	5%	1/10W
R323	1-216-864-11	SHORT CHIP	0		
R324	1-216-845-11	METAL CHIP	100K	5%	1/10W
R401	1-216-295-00	SHORT CHIP	0		
R421	1-216-864-11	SHORT CHIP	0		
R423	1-216-833-11	METAL CHIP	10K	5%	1/10W
R451	1-216-837-11	METAL CHIP	22K	5%	1/10W
R452	1-216-833-11	METAL CHIP	10K	5%	1/10W
		< VIBRATOR >			
X201	1-795-101-21	VIBRATOR, CERAMIC (16.9344MHz)			

****

	A-1159-964-A	CD-G BOARD, COMPLETE (RG290: MX)			
		**********			
		< CAPACITOR >			
C1001	1-162-970-11	CERAMIC CHIP	0.01uF	10%	25V
C1002	1-162-970-11	CERAMIC CHIP	0.01uF	10%	25V
C1003	1-162-970-11	CERAMIC CHIP	0.01uF	10%	25V
C1004	1-162-970-11	CERAMIC CHIP	0.01uF	10%	25V
C1005	1-162-970-11	CERAMIC CHIP	0.01uF	10%	25V
C1006	1-162-970-11	CERAMIC CHIP	0.01uF	10%	25V
C1007	1-162-970-11	CERAMIC CHIP	0.01uF	10%	25V
C1008	1-126-193-11	ELECT CHIP	1uF	20%	50V
C1010	1-126-206-11	ELECT CHIP	100uF	20%	6.3V
C1011	1-162-970-11	CERAMIC CHIP	0.01uF	10%	25V
C1012	1-126-205-11	ELECT CHIP	47uF	20%	6.3V
C1013	1-126-206-11	ELECT CHIP	100uF	20%	6.3V
C1014	1-162-970-11	CERAMIC CHIP	0.01uF	10%	25V

CD-G DECK

Ref. No.	Part No.	Description			Remark
C1015	1-162-970-11	CERAMIC CHIP	0.01uF	10%	25V
C1016	1-216-864-11	SHORT CHIP	0		
C1018	1-162-919-11	CERAMIC CHIP	22PF	5%	50V
C1019	1-162-919-11	CERAMIC CHIP	22PF	5%	50V
C1022	1-162-919-11	CERAMIC CHIP	22PF	5%	50V
C1023	1-126-193-11	ELECT CHIP	1uF	20%	50V
C1024	1-126-206-11	ELECT CHIP	100uF	20%	6.3V
C1025	1-162-970-11	CERAMIC CHIP	0.01uF	10%	25V
C1026	1-110-530-11	ELECT CHIP	1000uF	20%	6.3V
C1027	1-162-957-11	CERAMIC CHIP	220PF	5%	50V
C1028	1-126-206-11	ELECT CHIP	100uF	20%	6.3V
C1029	1-164-357-11	CERAMIC CHIP	0.001uF	5%	50V
C1030	1-124-778-00	ELECT CHIP	22uF	20%	6.3V
C1031	1-126-193-11	ELECT CHIP	1uF	20%	50V
		< CONNECTOR >			
CN1001	1-779-416-11	CONNECTOR, FFC (LIF (NON-ZIF)) 13P			
CN1004	1-794-509-41	PIN, CONNECTOR (PC BOARD) (3P)			
		< JUMPER RESISTOR >			
FB1001	1-216-864-11	SHORT CHIP	0		
		< IC >			
IC1001	6-707-420-01	IC TC9411AFG (BS, K)			
IC1002	6-704-474-01	IC MSM514400E-60TS-K			
IC1003	6-705-469-01	IC BA50BC0FP-E2			
IC1005	8-759-584-98	IC SN74AHCT04NSR			
IC1006	6-706-369-01	IC NJM2561F1-TE2			
		< RESISTOR >			
JR1001	1-216-864-11	SHORT CHIP	0		
L1001	1-216-864-11	SHORT CHIP	0		
L1002	1-216-797-11	METAL CHIP	10	5%	1/10W
		< TRANSISTOR >			
Q1001	8-729-027-59	TRANSISTOR	DTC144EKA-T146		
Q1002	8-729-027-59	TRANSISTOR	DTC144EKA-T146		
Q1005	8-729-027-59	TRANSISTOR	DTC144EKA-T146		
Q1006	8-729-027-23	TRANSISTOR	DTA114EKA-T146		
Q1007	8-729-027-59	TRANSISTOR	DTC144EKA-T146		
Q1008	8-729-804-41	TRANSISTOR	2SB1122-S		
Q1009	8-729-027-23	TRANSISTOR	DTA114EKA-T146		
Q1010	8-729-027-59	TRANSISTOR	DTC144EKA-T146		
		< RESISTOR >			
R1003	1-216-829-11	METAL CHIP	4.7K	5%	1/10W
R1004	1-216-825-11	METAL CHIP	2.2K	5%	1/10W
R1005	1-216-825-11	METAL CHIP	2.2K	5%	1/10W
R1006	1-216-829-11	METAL CHIP	4.7K	5%	1/10W
R1011	1-216-829-11	METAL CHIP	4.7K	5%	1/10W
R1012	1-216-833-11	METAL CHIP	10K	5%	1/10W
R1013	1-216-825-11	METAL CHIP	2.2K	5%	1/10W
R1015	1-216-809-11	METAL CHIP	100	5%	1/10W
R1016	1-216-833-11	METAL CHIP	10K	5%	1/10W
R1017	1-216-833-11	METAL CHIP	10K	5%	1/10W
R1020	1-216-833-11	METAL CHIP	10K	5%	1/10W
R1021	1-216-813-11	METAL CHIP	220	5%	1/10W
R1022	1-216-813-11	METAL CHIP	220	5%	1/10W
R1023	1-216-813-11	METAL CHIP	220	5%	1/10W
R1029	1-216-821-11	METAL CHIP	1K	5%	1/10W
R1030	1-216-837-11	METAL CHIP	22K	5%	1/10W
R1031	1-218-285-11	METAL CHIP	75	5%	1/10W
R1032	1-216-833-11	METAL CHIP	10K	5%	1/10W
R1033	1-216-825-11	METAL CHIP	2.2K	5%	1/10W
R1034	1-216-825-11	METAL CHIP	2.2K	5%	1/10W
R1035	1-216-825-11	METAL CHIP	2.2K	5%	1/10W
R1036	1-162-968-11	CERAMIC CHIP	0.0047uF	10%	50V
R1037	1-162-966-11	CERAMIC CHIP	0.0022uF	10%	50V
R1038	1-162-962-11	CERAMIC CHIP	470PF	10%	50V
R1051	1-216-797-11	METAL CHIP	10	5%	1/10W
		< VIBRATOR >			
X1002	1-813-555-11	VIBRATOR, CRYSTAL (14.31818MHz)			

****

	A-1171-482-A	DECK BOARD, COMPLETE			
		**********			
		< CAPACITOR/RESISTOR >			
C301	1-162-964-11	CERAMIC CHIP	0.001uF	10%	50V
C302	1-162-964-11	CERAMIC CHIP	0.001uF	10%	50V
C303	1-162-964-11	CERAMIC CHIP	0.001uF	10%	50V
C304	1-162-964-11	CERAMIC CHIP	0.001uF	10%	50V
C305	1-216-849-11	METAL CHIP	220K	5%	1/10W
C306	1-216-849-11	METAL CHIP	220K	5%	1/10W
C307	1-162-970-11	CERAMIC CHIP	0.01uF	10%	25V
C315	1-162-923-11	CERAMIC CHIP	47PF	5%	50V
C316	1-162-923-11	CERAMIC CHIP	47PF	5%	50V
C317	1-126-964-11	ELECT	10uF	20%	50V
C318	1-126-964-11	ELECT	10uF	20%	50V
C323	1-162-968-11	CERAMIC CHIP	0.0047uF	10%	50V
C324	1-162-968-11	CERAMIC CHIP	0.0047uF	10%	50V
C325	1-162-966-11	CERAMIC CHIP	0.0022uF	10%	50V
C326	1-162-966-11	CERAMIC CHIP	0.0022uF	10%	50V
C327	1-162-960-11	CERAMIC CHIP	220PF	10%	50V
C328	1-162-960-11	CERAMIC CHIP	220PF	10%	50V
C329	1-136-161-00	MYLAR	0.047uF	5%	50V
C330	1-136-161-00	MYLAR	0.047uF	5%	50V
C350	1-126-934-11	ELECT	220uF	20%	16V
C351	1-126-934-11	ELECT	220uF	20%	16V
C352	1-107-826-11	CERAMIC CHIP	0.1uF	10%	16V
C353	1-107-826-11	CERAMIC CHIP	0.1uF	10%	16V
C354	1-107-826-11	CERAMIC CHIP	0.1uF	10%	16V
C355	1-162-970-11	CERAMIC CHIP	0.01uF	10%	25V
C356	1-126-964-11	ELECT	10uF	20%	50V
C401	1-126-956-11	ELECT	0.1uF	20%	50V
C402	1-126-956-11	ELECT	0.1uF	20%	50V
C403	1-162-923-11	CERAMIC CHIP	47PF	5%	50V
C404	1-162-923-11	CERAMIC CHIP	47PF	5%	50V
C405	1-162-960-11	CERAMIC CHIP	220PF	10%	50V
C406	1-162-960-11	CERAMIC CHIP	220PF	10%	50V
C409	1-126-964-11	ELECT	10uF	20%	50V
C410	1-126-964-11	ELECT	10uF	20%	50V
C411	1-162-915-11	CERAMIC CHIP	10PF	0.5PF	50V
C412	1-162-915-11	CERAMIC CHIP	10PF	0.5PF	50V

DECK

Ref. No.	Part No.	Description			Remark
C413	1-162-960-11	CERAMIC CHIP	220PF	10%	50V
C414	1-162-960-11	CERAMIC CHIP	220PF	10%	50V
C415	1-162-968-11	CERAMIC CHIP	0.0047uF	10%	50V
C416	1-162-968-11	CERAMIC CHIP	0.0047uF	10%	50V
C417	1-107-726-91	CERAMIC CHIP	0.01uF	10%	16V
C418	1-107-726-91	CERAMIC CHIP	0.01uF	10%	16V
C430	1-164-156-11	CERAMIC CHIP	0.1uF		25V
C431	1-164-156-11	CERAMIC CHIP	0.1uF		25V
C433	1-162-970-11	CERAMIC CHIP	0.01uF	10%	25V
C452	1-126-947-11	ELECT	47uF	20%	35V
C453	1-130-471-00	MYLAR	0.001uF	5%	50V
C454	1-130-479-00	MYLAR	0.0047uF	5%	50V
C456	1-130-483-00	MYLAR	0.01uF	5%	50V
C458	1-130-475-00	MYLAR	0.0022uF	5%	50V
C461	1-162-962-11	CERAMIC CHIP	470PF	10%	50V
C462	1-162-962-11	CERAMIC CHIP	470PF	10%	50V
		< CONNECTOR >			
CN008	1-568-830-11	CONNECTOR, FFC 11P			
CN301	1-815-444-11	PIN, CONNECTOR (PWB) 3P			
CN302	1-815-449-11	PIN, CONNECTOR (PWB) 8P			
		< DIODE >			
D301	6-501-165-01	DIODE UDZW-TE17-4.3B			
D401	6-500-335-01	DIODE MC2838-T112-1			
		< JUMPER RESISTOR >			
FB301	1-216-864-11	SHORT CHIP	0		
		< IC >			
IC301	6-702-457-01	IC NJM14558M-TE2			
IC401	8-759-909-71	IC BA4558F			
		< JUMPER RESISTOR >			
JR301	1-216-864-11	SHORT CHIP	0		
JR302	1-216-864-11	SHORT CHIP	0		
JR306	1-216-864-11	SHORT CHIP	0		
JR307	1-216-864-11	SHORT CHIP	0		
JR310	1-216-864-11	SHORT CHIP	0		
JR311	1-216-864-11	SHORT CHIP	0		
JR402	1-216-864-11	SHORT CHIP	0		
		< TRANSFORMER >			
L451	1-443-760-11	TRANSFORMER, BIAS OSCILLATION			
		< TRANSISTOR >			
Q301	6-550-290-01	FET	2SJ460-T		
Q302	6-550-290-01	FET	2SJ460-T		
Q303	6-550-290-01	FET	2SJ460-T		
Q304	6-550-290-01	FET	2SJ460-T		
Q305	8-729-120-28	TRANSISTOR	2SC1623-L5L6		
Q306	8-729-120-28	TRANSISTOR	2SC1623-L5L6		
Q400	8-729-045-62	FET	2SK2158-T2B		
Q401	8-729-045-62	FET	2SK2158-T2B		
Q402	8-729-045-62	FET	2SK2158-T2B		
Q403	8-729-600-22	TRANSISTOR	2SA1235-F		
Q404	8-729-600-22	TRANSISTOR	2SA1235-F		
Q405	8-729-120-28	TRANSISTOR	2SC1623-L5L6		
Q406	8-729-600-22	TRANSISTOR	2SA1235-F		
Q407	8-729-600-22	TRANSISTOR	2SA1235-F		
Q408	8-729-600-22	TRANSISTOR	2SA1235-F		
Q409	6-551-276-01	TRANSISTOR	RT1N431C-TP-1		
Q410	6-551-276-01	TRANSISTOR	RT1N431C-TP-1		
Q451	8-729-037-13	TRANSISTOR	KTA1271Y		
Q452	8-729-120-28	TRANSISTOR	2SC1623-L5L6		
Q453	8-729-011-92	TRANSISTOR	2SC2001TP-K1K2		
		< RESISTOR >			
R301	1-216-841-11	METAL CHIP	47K	5%	1/10W
R302	1-216-841-11	METAL CHIP	47K	5%	1/10W
R303	1-216-841-11	METAL CHIP	47K	5%	1/10W
R304	1-216-841-11	METAL CHIP	47K	5%	1/10W
R305	1-216-849-11	METAL CHIP	220K	5%	1/10W
R306	1-216-849-11	METAL CHIP	220K	5%	1/10W
R307	1-216-829-11	METAL CHIP	4.7K	5%	1/10W
R308	1-216-829-11	METAL CHIP	4.7K	5%	1/10W
R309	1-216-817-11	METAL CHIP	470	5%	1/10W
R310	1-216-817-11	METAL CHIP	470	5%	1/10W
R311	1-216-813-11	METAL CHIP	220	5%	1/10W
R312	1-216-813-11	METAL CHIP	220	5%	1/10W
R313	1-216-805-11	METAL CHIP	47	5%	1/10W
R314	1-216-805-11	METAL CHIP	47	5%	1/10W
R315	1-216-809-11	METAL CHIP	100	5%	1/10W
R316	1-216-809-11	METAL CHIP	100	5%	1/10W
R317	1-216-853-11	METAL CHIP	470K	5%	1/10W
R318	1-216-853-11	METAL CHIP	470K	5%	1/10W
R319	1-216-837-11	METAL CHIP	22K	5%	1/10W
R320	1-216-837-11	METAL CHIP	22K	5%	1/10W
R323	1-216-829-11	METAL CHIP	4.7K	5%	1/10W
R324	1-216-829-11	METAL CHIP	4.7K	5%	1/10W
R325	1-216-809-11	METAL CHIP	100	5%	1/10W
R326	1-216-809-11	METAL CHIP	100	5%	1/10W
R349	1-216-809-11	METAL CHIP	100	5%	1/10W
R350	1-216-864-11	SHORT CHIP	0		
R351	1-216-821-11	METAL CHIP	1K	5%	1/10W
R401	1-216-841-11	METAL CHIP	47K	5%	1/10W
R402	1-216-841-11	METAL CHIP	47K	5%	1/10W
R403	1-216-837-11	METAL CHIP	22K	5%	1/10W
R404	1-216-837-11	METAL CHIP	22K	5%	1/10W
R405	1-216-841-11	METAL CHIP	47K	5%	1/10W
R406	1-216-841-11	METAL CHIP	47K	5%	1/10W
R407	1-216-829-11	METAL CHIP	4.7K	5%	1/10W
R408	1-216-829-11	METAL CHIP	4.7K	5%	1/10W
R409	1-216-845-11	METAL CHIP	100K	5%	1/10W
R410	1-216-845-11	METAL CHIP	100K	5%	1/10W
R411	1-216-853-11	METAL CHIP	470K	5%	1/10W
R412	1-216-853-11	METAL CHIP	470K	5%	1/10W
R413	1-216-849-11	METAL CHIP	220K	5%	1/10W
R414	1-216-849-11	METAL CHIP	220K	5%	1/10W
R415	1-216-825-11	METAL CHIP	2.2K	5%	1/10W
R416	1-216-825-11	METAL CHIP	2.2K	5%	1/10W
R423	1-216-841-11	METAL CHIP	47K	5%	1/10W
R424	1-216-841-11	METAL CHIP	47K	5%	1/10W
R427	1-216-864-11	SHORT CHIP	0		

DECK DRIVER KEY LEFT

Ref. No.	Part No.	Description			Remark
R428	1-216-864-11	SHORT CHIP	0		
R429	1-216-833-11	METAL CHIP	10K	5%	1/10W
R430	1-216-833-11	METAL CHIP	10K	5%	1/10W
R431	1-216-821-11	METAL CHIP	1K	5%	1/10W
R432	1-216-821-11	METAL CHIP	1K	5%	1/10W
R433	1-216-841-11	METAL CHIP	47K	5%	1/10W
R434	1-216-841-11	METAL CHIP	47K	5%	1/10W
R435	1-216-833-11	METAL CHIP	10K	5%	1/10W
R436	1-216-833-11	METAL CHIP	10K	5%	1/10W
R437	1-216-864-11	SHORT CHIP	0		
R438	1-216-864-11	SHORT CHIP	0		
R439	1-216-829-11	METAL CHIP	4.7K	5%	1/10W
R440	1-216-833-11	METAL CHIP	10K	5%	1/10W
R441	1-216-864-11	SHORT CHIP	0		
R442	1-216-841-11	METAL CHIP	47K	5%	1/10W
R443	1-216-833-11	METAL CHIP	10K	5%	1/10W
R444	1-216-845-11	METAL CHIP	100K	5%	1/10W
R445	1-216-864-11	SHORT CHIP	0		
R446	1-216-864-11	SHORT CHIP	0		
R449	1-216-801-11	METAL CHIP	22	5%	1/10W
R450	1-216-801-11	METAL CHIP	22	5%	1/10W
R451	1-216-833-11	METAL CHIP	10K	5%	1/10W
R452	1-216-841-11	METAL CHIP	47K	5%	1/10W
R453	1-216-829-11	METAL CHIP	4.7K	5%	1/10W
R454	1-216-829-11	METAL CHIP	4.7K	5%	1/10W
R455	1-216-797-11	METAL CHIP	10	5%	1/10W
R456	1-216-801-11	METAL CHIP	22	5%	1/10W
R457	1-216-837-11	METAL CHIP	22K	5%	1/10W
R458	1-216-793-11	METAL CHIP	4.7	5%	1/10W
R459	1-216-864-11	SHORT CHIP	0		
R460	1-216-864-11	SHORT CHIP	0		
R461	1-216-825-11	METAL CHIP	2.2K	5%	1/10W
R462	1-216-825-11	METAL CHIP	2.2K	5%	1/10W
R463	1-216-821-11	METAL CHIP	1K	5%	1/10W
R464	1-216-821-11	METAL CHIP	1K	5%	1/10W
R465	1-216-864-11	SHORT CHIP	0		
R466	1-216-864-11	SHORT CHIP	0		
R481	1-216-829-11	METAL CHIP	4.7K	5%	1/10W
R482	1-216-841-11	METAL CHIP	47K	5%	1/10W
R483	1-216-837-11	METAL CHIP	22K	5%	1/10W
R484	1-216-837-11	METAL CHIP	22K	5%	1/10W
R485	1-216-825-11	METAL CHIP	2.2K	5%	1/10W
R488	1-216-837-11	METAL CHIP	22K	5%	1/10W
R489	1-216-837-11	METAL CHIP	22K	5%	1/10W
R490	1-216-829-11	METAL CHIP	4.7K	5%	1/10W

****

A-1103-756-B DRIVER BOARD, COMPLETE
****

< CAPACITOR >

Ref. No.	Part No.	Description			Remark
C715	1-126-933-11	ELECT	100uF	20%	16V
C731	1-126-964-11	ELECT	10uF	20%	50V
C735	1-164-159-21	CERAMIC	0.1uF		50V
C736	1-164-159-21	CERAMIC	0.1uF		50V
C737	1-164-159-21	CERAMIC	0.1uF		50V
C741	1-162-306-11	CERAMIC	0.01uF	20%	16V
C751	1-162-306-11	CERAMIC	0.01uF	20%	16V
C752	1-164-159-21	CERAMIC	0.1uF		50V

< CONNECTOR >

Ref. No.	Part No.	Description
CN701	1-784-735-11	CONNECTOR, FFC 13P
CN702	1-784-766-11	CONNECTOR, FFC 5P
* CN703	1-564-720-11	PIN, CONNECTOR (SMALL TYPE) 4P
CN704	1-785-328-11	PIN, CONNECTOR (LIGHT ANGRE) 2P

< DIODE >

Ref. No.	Part No.	Description
D701	8-719-921-42	DIODE MTZJ-5.1A
D711	8-719-109-69	DIODE RD3.6ESB2

< IC >

Ref. No.	Part No.	Description
IC701	8-759-598-69	IC BA6956AN
IC712	8-759-598-69	IC BA6956AN

< TRANSISTOR >

Ref. No.	Part No.	Description	
Q731	8-729-029-66	TRANSISTOR	DTC114ESA

< RESISTOR >

Ref. No.	Part No.	Description			Remark
R701	1-249-413-11	CARBON	470	5%	1/4W
R702	1-247-807-31	CARBON	100	5%	1/4W
R711	1-249-417-11	CARBON	1K	5%	1/4W
R712	1-249-425-11	CARBON	4.7K	5%	1/4W
R713	1-249-433-11	CARBON	22K	5%	1/4W
R721	1-249-425-11	CARBON	4.7K	5%	1/4W
R722	1-249-425-11	CARBON	4.7K	5%	1/4W
R723	1-249-425-11	CARBON	4.7K	5%	1/4W
R731	1-247-807-31	CARBON	100	5%	1/4W
R732	1-249-429-11	CARBON	10K	5%	1/4W
R733	1-249-417-11	CARBON	1K	5%	1/4W
R734	1-249-430-11	CARBON	12K	5%	1/4W
R736	1-249-412-11	CARBON	390	5%	1/4W
R751	1-249-425-11	CARBON	4.7K	5%	1/4W

****

A-1159-678-A KEY LEFT BOARD, COMPLETE
(EXCEPT RG290: MX)
A-1163-368-A KEY LEFT BOARD, COMPLETE (RG290: MX)
****

< LED >

Ref. No.	Part No.	Description
D611	6-501-483-01	LED SLR-325VCT31P (STANDBY)

< RESISTOR >

Ref. No.	Part No.	Description			Remark
R626	1-216-821-11	METAL CHIP	1K	5%	1/10W
R652	1-216-825-11	METAL CHIP	2.2K	5%	1/10W
R653	1-216-825-11	METAL CHIP	2.2K	5%	1/10W
R654	1-216-829-11	METAL CHIP	4.7K	5%	1/10W
R655	1-216-829-11	METAL CHIP	4.7K	5%	1/10W
R656	1-216-833-11	METAL CHIP	10K	5%	1/10W
R675	1-216-829-11	METAL CHIP	4.7K	5%	1/10W
R676	1-216-833-11	METAL CHIP	10K	5%	1/10W
R677	1-216-837-11	METAL CHIP	22K	5%	1/10W

< SWITCH >

Ref. No.	Part No.	Description
S601	1-762-875-21	SWITCH, KEYBOARD (I/⏻)

Ref. No.	Part No.	Description			Remark
S602	1-762-875-21	SWITCH, KEYBOARD (DISPLAY) (EXCEPT RG290: MX)			
S602	1-762-875-21	SWITCH, KEYBOARD (KARAOKE) (RG290: MX)			
S603	1-762-875-21	SWITCH, KEYBOARD (AUDIO IN)			
S604	1-762-875-21	SWITCH, KEYBOARD (TAPE A/B)			
S605	1-762-875-21	SWITCH, KEYBOARD (TUNER/BAND)			
S606	1-762-875-21	SWITCH, KEYBOARD (CD)			
S625	1-762-875-21	SWITCH, KEYBOARD (ILLUMINATION)			
S626	1-762-875-21	SWITCH, KEYBOARD (REC PAUSE/START)			
S627	1-762-875-21	SWITCH, KEYBOARD (CD SYNC)			
**********					
	A-1159-681-A	KEY RIGHT BOARD, COMPLETE (EXCEPT RG290: MX)			
	A-1159-682-A	KEY RIGHT BOARD, COMPLETE (RG290: MX)			
		**********			
		< CAPACITOR >			
C643	1-162-970-11	CERAMIC CHIP	0.01uF	10%	25V
C644	1-162-970-11	CERAMIC CHIP	0.01uF	10%	25V
		< RESISTOR >			
R682	1-216-825-11	METAL CHIP	2.2K	5%	1/10W
R683	1-216-825-11	METAL CHIP	2.2K	5%	1/10W
R684	1-216-829-11	METAL CHIP	4.7K	5%	1/10W
R685	1-216-829-11	METAL CHIP	4.7K	5%	1/10W
R686	1-216-833-11	METAL CHIP	10K	5%	1/10W
R687	1-216-837-11	METAL CHIP	22K	5%	1/10W
R688	1-216-841-11	METAL CHIP	47K	5%	1/10W
		< SWITCH >			
S624	1-762-875-21	SWITCH, KEYBOARD (ENTER)			
S631	1-762-875-21	SWITCH, KEYBOARD (EQ BAND)			
S632	1-762-875-21	SWITCH, KEYBOARD (SURRROUND)			
S633	1-762-875-21	SWITCH, KEYBOARD (GROOVE)			
S634	1-762-875-21	SWITCH, KEYBOARD (≜)			
S635	1-762-875-21	SWITCH, KEYBOARD (DISC SKIP/EX-CHANGE)			
S636	1-762-875-21	SWITCH, KEYBOARD (DISC 3)			
S637	1-762-875-21	SWITCH, KEYBOARD (DISC 2)			
S638	1-762-875-21	SWITCH, KEYBOARD (DISC 1)			
S672	1-786-418-11	SWITCH, ROTARY (ENCODER) (MULTI JOG)			
**********					
	A-1163-371-A	MAIN BOARD, COMPLETE (RG290: AEP, UK)			
	A-1163-372-A	MAIN BOARD, COMPLETE (RG290: RU)			
	A-1163-373-A	MAIN BOARD, COMPLETE(RG290: E3, SP, AUS)			
	A-1163-375-A	MAIN BOARD, COMPLETE(RG290: E2, E51, AR)			
	A-1163-376-A	MAIN BOARD, COMPLETE (RG290: MX)			
	A-1163-423-A	MAIN BOARD, COMPLETE (RG190: AEP)			
	A-1163-424-A	MAIN BOARD, COMPLETE (RG190: RU)			
	A-1163-425-A	MAIN BOARD, COMPLETE(RG190: E3, SP, AUS)			
	A-1163-426-A	MAIN BOARD, COMPLETE (RG190: EA)			
	A-1163-427-A	MAIN BOARD, COMPLETE(RG190: E2, E51, AR)			
		**********			
	7-685-872-01	SCREW +BVTT 3X8 (S)			
		< CAPACITOR >			
C001	1-136-497-81	FILM	0.1uF	5%	50V
C002	1-136-497-81	FILM	0.1uF	5%	50V
C006	1-126-964-11	ELECT	10uF	20%	50V

Ref. No.	Part No.	Description			Remark
C007	1-126-965-11	ELECT	22uF	20%	50V
C008	1-126-943-11	ELECT	2200uF	20%	25V
C010	1-165-621-11	CERAMIC CHIP	0.1uF		50V
C011	1-136-497-81	FILM	0.1uF	5%	50V
C012	1-136-497-81	FILM	0.1uF	5%	50V
C013	1-126-943-11	ELECT	2200uF	20%	25V
C015	1-126-933-11	ELECT	100uF	20%	16V
C023	1-126-943-11	ELECT	2200uF	20%	25V
C025	1-126-933-11	ELECT	100uF	20%	16V
C026	1-162-974-11	CERAMIC CHIP	0.01uF		50V
C027	1-162-974-11	CERAMIC CHIP	0.01uF		50V
C031	1-216-864-11	SHORT CHIP	0		
C032	1-162-964-11	CERAMIC CHIP	0.001uF	10%	50V (RG190: AEP, RU, E3, EA, SP, AUS/ RG290: AEP, UK, RU, E3, SP, AUS)
C033	1-126-933-11	ELECT	100uF	20%	16V
C034	1-126-963-11	ELECT	4.7uF	20%	50V
C035	1-126-947-11	ELECT	47uF	20%	35V
C063	1-164-156-11	CERAMIC CHIP	0.1uF		25V
C064	1-162-964-11	CERAMIC CHIP	0.001uF	10%	50V
C065	1-162-964-11	CERAMIC CHIP	0.001uF	10%	50V (RG190: AEP, RU, E3, EA, SP, AUS/ RG290: AEP, UK, RU, E3, SP, AUS)
C066	1-162-964-11	CERAMIC CHIP	0.001uF	10%	50V (RG190: AEP, RU, E3, EA, SP, AUS/ RG290: AEP, UK, RU, E3, SP, AUS)
C068	1-162-964-11	CERAMIC CHIP	0.001uF	10%	50V
C069	1-162-964-11	CERAMIC CHIP	0.001uF	10%	50V
C109	1-126-964-11	ELECT	10uF	20%	50V
C110	1-126-964-11	ELECT	10uF	20%	50V
C111	1-126-965-11	ELECT	22uF	20%	50V
C112	1-126-947-11	ELECT	47uF	20%	35V (RG190)
C112	1-126-965-11	ELECT	22uF	20%	50V (RG290)
C114	1-164-360-11	CERAMIC CHIP	0.1uF		16V
C115	1-126-933-11	ELECT	100uF	20%	16V
C116	1-126-960-11	ELECT	1uF	20%	50V
C117	1-162-964-11	CERAMIC CHIP	0.001uF	10%	50V
C118	1-126-961-11	ELECT	2.2uF	20%	50V
C119	1-126-961-11	ELECT	2.2uF	20%	50V
C120	1-164-360-11	CERAMIC CHIP	0.1uF		16V
C121	1-126-933-11	ELECT	100uF	20%	16V
C122	1-165-176-11	CERAMIC CHIP	0.047uF	10%	16V
C123	1-162-923-11	CERAMIC CHIP	47PF	5%	50V (RG190: AEP, RU/RG290: AEP, UK, RU)
C124	1-162-923-11	CERAMIC CHIP	47PF	5%	50V (RG190: AEP, RU/RG290: AEP, UK, RU)
C125	1-126-960-11	ELECT	1uF	20%	50V
C126	1-126-960-11	ELECT	1uF	20%	50V
C129	1-126-960-11	ELECT	1uF	20%	50V
C130	1-126-960-11	ELECT	1uF	20%	50V
C133	1-164-156-11	CERAMIC CHIP	0.1uF		25V (RG190: AEP, RU/RG290: AEP, UK, RU)
C134	1-164-156-11	CERAMIC CHIP	0.1uF		25V (RG190: AEP, RU/RG290: AEP, UK, RU)
C135	1-126-960-11	ELECT	1uF	20%	50V (RG190: AEP, RU/RG290: AEP, UK, RU)
C136	1-126-960-11	ELECT	1uF	20%	50V (RG190: AEP, RU/RG290: AEP, UK, RU)

Ref. No.	Part No.	Description			Remark
C137	1-126-960-11	ELECT	1uF	20%	50V
C138	1-126-960-11	ELECT	1uF	20%	50V
C139	1-107-826-11	CERAMIC CHIP	0.1uF	10%	16V
C140	1-107-826-11	CERAMIC CHIP	0.1uF	10%	16V
C141	1-126-964-11	ELECT	10uF	20%	50V
C142	1-126-964-11	ELECT	10uF	20%	50V
C143	1-137-374-11	MYLAR	0.047uF	5%	50V
C144	1-137-374-11	MYLAR	0.047uF	5%	50V
C145	1-162-968-11	CERAMIC CHIP	0.0047uF	10%	50V
C146	1-162-968-11	CERAMIC CHIP	0.0047uF	10%	50V
C147	1-164-362-11	CERAMIC CHIP	470PF	5%	50V
C148	1-164-362-11	CERAMIC CHIP	470PF	5%	50V
C149	1-164-227-11	CERAMIC CHIP	0.022uF	10%	25V
C150	1-164-227-11	CERAMIC CHIP	0.022uF	10%	25V
C151	1-164-227-11	CERAMIC CHIP	0.022uF	10%	25V
C152	1-164-227-11	CERAMIC CHIP	0.022uF	10%	25V
C153	1-126-960-11	ELECT	1uF	20%	50V
C154	1-126-960-11	ELECT	1uF	20%	50V
C155	1-136-497-81	FILM	0.1uF	5%	50V
C156	1-136-497-81	FILM	0.1uF	5%	50V
C157	1-136-497-81	FILM	0.1uF	5%	50V
C158	1-136-497-81	FILM	0.1uF	5%	50V
C159	1-162-960-11	CERAMIC CHIP	220PF	10%	50V
C160	1-162-960-11	CERAMIC CHIP	220PF	10%	50V
C173	1-162-949-11	CERAMIC CHIP	47PF	5%	50V
C174	1-162-949-11	CERAMIC CHIP	47PF	5%	50V
C253	1-162-923-11	CERAMIC CHIP	47PF	5%	50V
C254	1-162-923-11	CERAMIC CHIP	47PF	5%	50V
C255	1-162-919-11	CERAMIC CHIP	22PF	5%	50V
C256	1-162-919-11	CERAMIC CHIP	22PF	5%	50V
C257	1-126-947-11	ELECT	47uF	20%	35V
C258	1-126-947-11	ELECT	47uF	20%	35V
C259	1-126-964-11	ELECT	10uF	20%	50V
C260	1-124-261-00	ELECT	10uF	20%	25V
C263	1-126-947-11	ELECT	47uF	20%	35V
C264	1-162-964-11	CERAMIC CHIP	0.001uF	10%	50V
C265	1-126-963-11	ELECT	4.7uF	20%	50V
C266	1-126-963-11	ELECT	4.7uF	20%	50V
C267	1-162-968-11	CERAMIC CHIP	0.0047uF	10%	50V
C268	1-162-968-11	CERAMIC CHIP	0.0047uF	10%	50V
C305	1-162-964-11	CERAMIC CHIP	0.001uF	10%	50V (RG190: AEP, RU, E3, EA, SP, AUS/ RG290: AEP, UK, RU, E3, SP, AUS)
C317	1-126-926-11	ELECT	1000uF	20%	10V
C333	1-164-156-11	CERAMIC CHIP	0.1uF		25V (RG290: MX)
C336	1-162-970-11	CERAMIC CHIP	0.01uF	10%	25V (RG290: MX)
C385	1-162-927-11	CERAMIC CHIP	100PF	5%	50V
C386	1-162-927-11	CERAMIC CHIP	100PF	5%	50V
C387	1-162-962-11	CERAMIC CHIP	470PF	10%	50V
C388	1-162-927-11	CERAMIC CHIP	100PF	5%	50V
C391	1-164-156-11	CERAMIC CHIP	0.1uF		25V
C901	1-126-933-11	ELECT	100uF	20%	16V
C902	1-126-964-11	ELECT	10uF	20%	50V
C903	1-126-959-11	ELECT	0.47uF	20%	50V
C904	1-164-156-11	CERAMIC CHIP	0.1uF		25V
C906	1-126-964-11	ELECT	10uF	20%	50V
C908	1-164-156-11	CERAMIC CHIP	0.1uF		25V
C909	1-164-156-11	CERAMIC CHIP	0.1uF		25V
C910	1-164-156-11	CERAMIC CHIP	0.1uF		25V
C911	1-162-964-11	CERAMIC CHIP	0.001uF	10%	50V
C912	1-164-156-11	CERAMIC CHIP	0.1uF		25V
C913	1-162-905-11	CERAMIC CHIP	1PF	0.25PF	50V
C914	1-162-919-11	CERAMIC CHIP	22PF	5%	50V
C916	1-114-154-11	DOUBLE LAYER	47000uF		5.5V
C917	1-164-156-11	CERAMIC CHIP	0.1uF		25V
C918	1-162-964-11	CERAMIC CHIP	0.001uF	10%	50V
C919	1-164-156-11	CERAMIC CHIP	0.1uF		25V
C920	1-162-905-11	CERAMIC CHIP	1PF	0.25PF	50V
C921	1-126-961-11	ELECT	2.2uF	20%	50V
C922	1-126-963-11	ELECT	4.7uF	20%	50V
C923	1-162-960-11	CERAMIC CHIP	220PF	10%	50V
C924	1-162-927-11	CERAMIC CHIP	100PF	5%	50V (RG190: AEP/RG290: AEP, UK)
C925	1-162-927-11	CERAMIC CHIP	100PF	5%	50V (RG190: AEP/RG290: AEP, UK)
C926	1-162-960-11	CERAMIC CHIP	220PF	10%	50V
C927	1-162-919-11	CERAMIC CHIP	22PF	5%	50V
		< CONNECTOR >			
* CN031	1-573-094-11	SOCKET, CONNECTOR 13P			
CN041	1-819-131-11	PIN, CONNECTOR 3P			
CN061	1-568-828-11	CONNECTOR, FFC 9P (RG190: AEP, RU, E3, EA, SP, AUS/RG290: AEP, UK, RU, E3, SP, AUS)			
CN061	1-784-774-11	CONNECTOR, FFC 13P (RG190: E2, E51, AR/RG290: E2, E51, MX, AR)			
CN091	1-568-828-11	CONNECTOR FFC 9P			
CN201	1-568-830-11	CONNECTOR, FFC11P			
CN301	1-779-291-11	CONNECTOR, FFC (LIF (NON-ZIF)) 23P (EXCEPT RG290: MX)			
CN302	1-779-299-11	CONNECTOR, FFC (LIF (NON-ZIF)) 31P (RG290: MX)			
CN331	1-784-774-11	CONNECTOR, FFC 13P (RG290: MX)			
CN991	1-784-780-11	CONNECTOR, FFC 19P			
		< DIODE >			
D001	6-500-522-21	DIODE 10EDB40-TB3			
D002	6-500-522-21	DIODE 10EDB40-TB3			
D003	6-500-522-21	DIODE 10EDB40-TB3			
D004	6-500-522-21	DIODE 10EDB40-TB3			
D006	8-719-988-61	DIODE 1SS355TE-17			
D007	6-501-166-01	DIODE UDZW-TE17-4.7B			
D008	8-719-000-08	DIODE MC2838			
D009	6-500-335-01	DIODE MC2838-T112-1			
D011	6-500-522-21	DIODE 10EDB40-TB3			
D012	6-500-522-21	DIODE 10EDB40-TB3			
D013	6-500-522-21	DIODE 10EDB40-TB3			
D014	6-500-522-21	DIODE 10EDB40-TB3			
D021	6-500-522-21	DIODE 10EDB40-TB3			
D022	6-500-522-21	DIODE 10EDB40-TB3			
D023	6-500-522-21	DIODE 10EDB40-TB3			
D024	6-500-522-21	DIODE 10EDB40-TB3			
D031	8-719-988-61	DIODE 1SS355TE-17			
D035	8-719-000-08	DIODE MC2838			
D036	8-719-000-07	DIODE MC2836			

Ref. No.	Part No.	Description	Remark
D301	6-500-522-21	DIODE 10EDB40-TB3	
D302	6-500-522-21	DIODE 10EDB40-TB3	
D303	6-501-166-01	DIODE UDZW-TE17-4.7B (RG290: MX)	
D901	6-501-166-01	DIODE UDZW-TE17-4.7B	
D902	8-719-000-07	DIODE MC2836	
D905	8-719-988-61	DIODE 1SS355TE-17	
D910	8-719-988-61	DIODE 1SS355TE-17	
D921	6-500-848-01	DIODE MC2840-T112-1	
D923	6-500-848-01	DIODE MC2840-T112-1	
D943	8-719-000-08	DIODE MC2838	
D947	8-719-988-61	DIODE 1SS355TE-17	
		< IC >	
IC006	6-702-771-01	IC TA78033LS	
IC011	8-759-701-59	IC NJM78M09FA	
IC021	8-759-701-59	IC NJM78M09FA	
IC101	6-709-331-01	IC R2S15207FP	
IC251	8-759-909-71	IC BA4558F	
IC901	6-808-126-01	IC uPD78F0547GC-RGCDGA-UBT-A (for SERVICE) (RG290: MX)	
IC901	6-808-402-01	IC uPD78F0547GC-RGSTDA-UBT-A (for SERVICE) (EXCEPT RG290: MX)	
IC902	8-759-713-61	IC PST3429UL	
		< JUMPER RESISTOR >	
JR101	1-216-864-11	SHORT CHIP 0 (RG190: AEP, RU, E3, EA, SP, AUS/RG290: AEP, UK, RU, E3, SP, AUS)	
JR102	1-216-864-11	SHORT CHIP 0 (RG190: AEP, RU, E3, EA, SP, AUS/RG290: AEP, UK, RU, E3, SP, AUS)	
JR103	1-216-864-11	SHORT CHIP 0	
JR104	1-216-864-11	SHORT CHIP 0	
JR105	1-216-864-11	SHORT CHIP 0	
JR106	1-216-864-11	SHORT CHIP 0	
JR107	1-216-864-11	SHORT CHIP 0	
JR108	1-216-864-11	SHORT CHIP 0	
JR109	1-216-864-11	SHORT CHIP 0	
JR110	1-216-864-11	SHORT CHIP 0	
JR111	1-216-864-11	SHORT CHIP 0	
JR112	1-216-864-11	SHORT CHIP 0	
JR113	1-216-864-11	SHORT CHIP 0 (RG290: MX)	
JR114	1-216-864-11	SHORT CHIP 0	
JR115	1-216-864-11	SHORT CHIP 0	
JR116	1-216-864-11	SHORT CHIP 0 (RG290: MX)	
JR117	1-216-864-11	SHORT CHIP 0	
JR118	1-216-864-11	SHORT CHIP 0	
JR119	1-216-864-11	SHORT CHIP 0	
JR120	1-216-864-11	SHORT CHIP 0 (EXCEPT RG290: MX)	
JR121	1-216-864-11	SHORT CHIP 0	
JR122	1-216-864-11	SHORT CHIP 0	
JR123	1-216-864-11	SHORT CHIP 0	
		< TRANSISTOR >	
Q002	8-729-120-28	TRANSISTOR 2SC1623-L5L6	
Q011	8-729-027-43	TRANSISTOR DTC114EKA-T146	
Q041	8-729-120-28	TRANSISTOR 2SC1623-L5L6	
Q042	8-729-037-13	TRANSISTOR KTA1271Y	
Q043	8-729-037-03	TRANSISTOR KTA1266GR-AT	
Q044	8-729-120-28	TRANSISTOR 2SC1623-L5L6	

Ref. No.	Part No.	Description	Remark
Q045	8-729-120-28	TRANSISTOR 2SC1623-L5L6	
Q046	8-729-045-62	FET 2SK2158-T2B	
Q111	8-729-120-28	TRANSISTOR 2SC1623-L5L6	
Q112	8-729-120-28	TRANSISTOR 2SC1623-L5L6	
Q113	8-729-120-28	TRANSISTOR 2SC1623-L5L6	
Q114	8-729-120-28	TRANSISTOR 2SC1623-L5L6	
Q251	8-729-120-28	TRANSISTOR 2SC1623-L5L6	
Q252	8-729-120-28	TRANSISTOR 2SC1623-L5L6	
Q261	8-729-027-23	TRANSISTOR DTA114EKA-T146	
Q901	8-729-120-28	TRANSISTOR 2SC1623-L5L6	
Q902	8-729-120-28	TRANSISTOR 2SC1623-L5L6	
Q903	8-729-037-13	TRANSISTOR KTA1271Y	
Q904	8-729-120-28	TRANSISTOR 2SC1623-L5L6	
		< RESISTOR >	
R001	1-216-801-11	METAL CHIP 22 5% 1/10W	
R005	1-216-829-11	METAL CHIP 4.7K 5% 1/10W	
R006	1-216-829-11	METAL CHIP 4.7K 5% 1/10W	
R010	1-216-837-11	METAL CHIP 22K 5% 1/10W	
R011	1-216-833-11	METAL CHIP 10K 5% 1/10W	
R013	1-216-837-11	METAL CHIP 22K 5% 1/10W	
R014	1-216-833-11	METAL CHIP 10K 5% 1/10W	
R016	1-216-845-11	METAL CHIP 100K 5% 1/10W	
R032	1-216-823-11	METAL CHIP 1.5K 5% 1/10W	(RG290)
R032	1-216-864-11	SHORT CHIP 0	(RG190)
R033	1-216-837-11	METAL CHIP 22K 5% 1/10W	
R034	1-216-837-11	METAL CHIP 22K 5% 1/10W	
R035	1-216-829-11	METAL CHIP 4.7K 5% 1/10W	
R036	1-216-829-11	METAL CHIP 4.7K 5% 1/10W	
R037	1-216-825-11	METAL CHIP 2.2K 5% 1/10W	(RG290)
R037	1-216-832-11	METAL CHIP 8.2K 5% 1/10W	(RG190)
R039	1-260-308-11	CARBON 22 5% 1/2W	
R041	1-216-864-11	SHORT CHIP 0	
R042	1-216-833-11	METAL CHIP 10K 5% 1/10W	
R043	1-216-829-11	METAL CHIP 4.7K 5% 1/10W	
R045	1-216-821-11	METAL CHIP 1K 5% 1/10W	
R046	1-216-805-11	METAL CHIP 47 5% 1/10W	
R047	1-216-797-11	METAL CHIP 10 5% 1/10W	
R048	1-216-797-11	METAL CHIP 10 5% 1/10W	
R049	1-216-849-11	METAL CHIP 220K 5% 1/10W	
R050	1-216-825-11	METAL CHIP 2.2K 5% 1/10W	
R051	1-216-825-11	METAL CHIP 2.2K 5% 1/10W	
R052	1-216-853-11	METAL CHIP 470K 5% 1/10W	
R053	1-216-837-11	METAL CHIP 22K 5% 1/10W	
R054	1-216-837-11	METAL CHIP 22K 5% 1/10W	
R055	1-216-825-11	METAL CHIP 2.2K 5% 1/10W	
R056	1-216-833-11	METAL CHIP 10K 5% 1/10W	
R057	1-216-821-11	METAL CHIP 1K 5% 1/10W	
⚠R059	1-215-890-11	METAL OXIDE 470 5% 2W F	(RG190)
⚠R059	1-215-892-11	METAL OXIDE 1K 5% 2W F	(RG290)
⚠R060	1-215-890-11	METAL OXIDE 470 5% 2W F	(RG190)

MAIN

Ref. No.	Part No.	Description			Remark
⚠R060	1-215-892-11	METAL OXIDE	1K	5%	2W F (RG290)
R061	1-216-864-11	SHORT CHIP	0		
R063	1-216-805-11	METAL CHIP	47	5%	1/10W (RG190)
R063	1-216-809-11	METAL CHIP	100	5%	1/10W (RG290)
R064	1-216-805-11	METAL CHIP	47	5%	1/10W (RG190)
R064	1-216-809-11	METAL CHIP	100	5%	1/10W (RG290)
R068	1-216-797-11	METAL CHIP	10	5%	1/10W (RG190: E2, E51, AR/RG290: E2, E51, MX, AR)
R070	1-216-833-11	METAL CHIP	10K	5%	1/10W
R101	1-216-833-11	METAL CHIP	10K	5%	1/10W
R102	1-216-821-11	METAL CHIP	1K	5%	1/10W
R103	1-216-833-11	METAL CHIP	10K	5%	1/10W
R104	1-216-833-11	METAL CHIP	10K	5%	1/10W
R105	1-216-809-11	METAL CHIP	100	5%	1/10W
R106	1-216-821-11	METAL CHIP	1K	5%	1/10W (RG190: E2, E51, AR/RG290: E2, E51, MX, AR)
R108	1-216-825-11	METAL CHIP	2.2K	5%	1/10W
R109	1-216-829-11	METAL CHIP	4.7K	5%	1/10W
R110	1-216-841-11	METAL CHIP	47K	5%	1/10W
R111	1-216-845-11	METAL CHIP	100K	5%	1/10W
R112	1-216-817-11	METAL CHIP	470	5%	1/10W
R113	1-216-829-11	METAL CHIP	4.7K	5%	1/10W
R114	1-216-825-11	METAL CHIP	2.2K	5%	1/10W
R116	1-216-809-11	METAL CHIP	100	5%	1/10W
R119	1-216-817-11	METAL CHIP	470	5%	1/10W
R120	1-216-817-11	METAL CHIP	470	5%	1/10W
R121	1-216-809-11	METAL CHIP	100	5%	1/10W
R122	1-216-809-11	METAL CHIP	100	5%	1/10W
R123	1-216-825-11	METAL CHIP	2.2K	5%	1/10W
R124	1-216-825-11	METAL CHIP	2.2K	5%	1/10W
R125	1-216-829-11	METAL CHIP	4.7K	5%	1/10W
R126	1-216-829-11	METAL CHIP	4.7K	5%	1/10W
R127	1-216-821-11	METAL CHIP	1K	5%	1/10W (RG190: E2, E51, AR/RG290: E2, E51, MX, AR)
R127	1-216-825-11	METAL CHIP	2.2K	5%	1/10W (RG190: AEP, RU, E3, EA, SP, AUS/ RG290: AEP, UK, RU, E3, SP, AUS)
R128	1-216-821-11	METAL CHIP	1K	5%	1/10W (RG190: E2, E51, AR/RG290: E2, E51, MX, AR)
R128	1-216-825-11	METAL CHIP	2.2K	5%	1/10W (RG190: AEP, RU, E3, EA, SP, AUS/ RG290: AEP, UK, RU, E3, SP, AUS)
R129	1-216-841-11	METAL CHIP	47K	5%	1/10W (RG190: E2, E51, AR/RG290: E2, E51, MX, AR)
R129	1-216-853-11	METAL CHIP	470K	5%	1/10W (RG190: AEP, RU, E3, EA, SP, AUS/ RG290: AEP, UK, RU, E3, SP, AUS)
R130	1-216-841-11	METAL CHIP	47K	5%	1/10W (RG190: E2, E51, AR/RG290: E2, E51, MX, AR)
R130	1-216-853-11	METAL CHIP	470K	5%	1/10W (RG190: AEP, RU, E3, EA, SP, AUS/ RG290: AEP, UK, RU, E3, SP, AUS)
R131	1-216-809-11	METAL CHIP	100	5%	1/10W
R132	1-216-809-11	METAL CHIP	100	5%	1/10W
R133	1-216-864-11	SHORT CHIP	0		(RG190: E2, E51, AR/RG290: E2, E51, MX, AR)
R134	1-216-864-11	SHORT CHIP	0		(RG190: E2, E51, AR/RG290: E2, E51, MX, AR)
R135	1-216-833-11	METAL CHIP	10K	5%	1/10W
R136	1-216-833-11	METAL CHIP	10K	5%	1/10W
R137	1-216-825-11	METAL CHIP	2.2K	5%	1/10W
R138	1-216-825-11	METAL CHIP	2.2K	5%	1/10W
R139	1-216-821-11	METAL CHIP	1K	5%	1/10W
R140	1-216-821-11	METAL CHIP	1K	5%	1/10W
R143	1-216-813-11	METAL CHIP	220	5%	1/10W
R144	1-216-813-11	METAL CHIP	220	5%	1/10W
R145	1-216-841-11	METAL CHIP	47K	5%	1/10W
R147	1-216-841-11	METAL CHIP	47K	5%	1/10W
R148	1-216-841-11	METAL CHIP	47K	5%	1/10W
R154	1-216-857-11	METAL CHIP	1M	5%	1/10W
R155	1-216-849-11	METAL CHIP	220K	5%	1/10W
R156	1-216-849-11	METAL CHIP	220K	5%	1/10W
R157	1-216-849-11	METAL CHIP	220K	5%	1/10W
R158	1-216-849-11	METAL CHIP	220K	5%	1/10W
R159	1-216-841-11	METAL CHIP	47K	5%	1/10W
R160	1-216-841-11	METAL CHIP	47K	5%	1/10W
R161	1-216-837-11	METAL CHIP	22K	5%	1/10W
R162	1-216-837-11	METAL CHIP	22K	5%	1/10W
R163	1-216-841-11	METAL CHIP	47K	5%	1/10W
R164	1-216-841-11	METAL CHIP	47K	5%	1/10W
R165	1-216-829-11	METAL CHIP	4.7K	5%	1/10W
R166	1-216-829-11	METAL CHIP	4.7K	5%	1/10W
R167	1-216-821-11	METAL CHIP	1K	5%	1/10W
R168	1-216-821-11	METAL CHIP	1K	5%	1/10W
R171	1-216-864-11	SHORT CHIP	0		
R172	1-216-864-11	SHORT CHIP	0		
R175	1-216-825-11	METAL CHIP	2.2K	5%	1/10W
R176	1-216-825-11	METAL CHIP	2.2K	5%	1/10W
R177	1-216-825-11	METAL CHIP	2.2K	5%	1/10W
R178	1-216-825-11	METAL CHIP	2.2K	5%	1/10W
R201	1-216-825-11	METAL CHIP	2.2K	5%	1/10W
R202	1-216-825-11	METAL CHIP	2.2K	5%	1/10W
R250	1-216-829-11	METAL CHIP	4.7K	5%	1/10W (RG290)
R250	1-216-833-11	METAL CHIP	10K	5%	1/10W (RG190)
R251	1-216-813-11	METAL CHIP	220	5%	1/10W (RG190: AEP, RU)
R251	1-216-817-11	METAL CHIP	470	5%	1/10W (EXCEPT RG190: AEP, RU)
R252	1-216-813-11	METAL CHIP	220	5%	1/10W (RG190: AEP, RU)
R252	1-216-817-11	METAL CHIP	470	5%	1/10W (EXCEPT RG190: AEP, RU)
R253	1-216-829-11	METAL CHIP	4.7K	5%	1/10W (RG290)
R253	1-216-833-11	METAL CHIP	10K	5%	1/10W (RG190)
R254	1-216-825-11	METAL CHIP	2.2K	5%	1/10W (RG290)
R254	1-216-833-11	METAL CHIP	10K	5%	1/10W (RG190)
R257	1-216-825-11	METAL CHIP	2.2K	5%	1/10W (RG290)
R257	1-216-833-11	METAL CHIP	10K	5%	1/10W (RG190)

Ref. No.	Part No.	Description			Remark
R261	1-216-833-11	METAL CHIP	10K	5%	1/10W
R262	1-216-833-11	METAL CHIP	10K	5%	1/10W
R263	1-216-825-11	METAL CHIP	2.2K	5%	1/10W
R264	1-216-825-11	METAL CHIP	2.2K	5%	1/10W
R265	1-216-809-11	METAL CHIP	100	5%	1/10W
R267	1-216-841-11	METAL CHIP	47K	5%	1/10W
R268	1-216-829-11	METAL CHIP	4.7K	5%	1/10W
R271	1-216-864-11	SHORT CHIP	0		
R291	1-216-825-11	METAL CHIP	2.2K	5%	1/10W
R292	1-216-825-11	METAL CHIP	2.2K	5%	1/10W
R315	1-216-809-11	METAL CHIP	100	5%	1/10W
R316	1-216-809-11	METAL CHIP	100	5%	1/10W
R317	1-216-809-11	METAL CHIP	100	5%	1/10W
R318	1-216-809-11	METAL CHIP	100	5%	1/10W
R319	1-216-809-11	METAL CHIP	100	5%	1/10W
R320	1-216-809-11	METAL CHIP	100	5%	1/10W (RG290: MX)
R321	1-216-809-11	METAL CHIP	100	5%	1/10W
R322	1-216-809-11	METAL CHIP	100	5%	1/10W
R323	1-216-809-11	METAL CHIP	100	5%	1/10W
R324	1-216-809-11	METAL CHIP	100	5%	1/10W
R325	1-216-837-11	METAL CHIP	22K	5%	1/10W
R326	1-216-837-11	METAL CHIP	22K	5%	1/10W
R329	1-216-809-11	METAL CHIP	100	5%	1/10W (RG290: MX)
R330	1-216-821-11	METAL CHIP	1K	5%	1/10W (RG290: MX)
R331	1-216-809-11	METAL CHIP	100	5%	1/10W (RG290: MX)
R332	1-216-809-11	METAL CHIP	100	5%	1/10W (RG290: MX)
R333	1-216-833-11	METAL CHIP	10K	5%	1/10W (RG290: MX)
R334	1-216-809-11	METAL CHIP	100	5%	1/10W (RG290: MX)
R335	1-216-809-11	METAL CHIP	100	5%	1/10W (RG290: MX)
R336	1-216-833-11	METAL CHIP	10K	5%	1/10W (RG290: MX)
R337	1-216-809-11	METAL CHIP	100	5%	1/10W (RG290: MX)
R338	1-216-809-11	METAL CHIP	100	5%	1/10W (RG290: MX)
R339	1-216-821-11	METAL CHIP	1K	5%	1/10W (RG290: MX)
R340	1-216-821-11	METAL CHIP	1K	5%	1/10W (RG290: MX)
R341	1-216-833-11	METAL CHIP	10K	5%	1/10W
R342	1-216-821-11	METAL CHIP	1K	5%	1/10W
R343	1-216-837-11	METAL CHIP	22K	5%	1/10W
R344	1-216-837-11	METAL CHIP	22K	5%	1/10W
R345	1-216-833-11	METAL CHIP	10K	5%	1/10W
R346	1-216-821-11	METAL CHIP	1K	5%	1/10W
R347	1-216-837-11	METAL CHIP	22K	5%	1/10W
R348	1-216-837-11	METAL CHIP	22K	5%	1/10W
R349	1-216-833-11	METAL CHIP	10K	5%	1/10W
R350	1-216-821-11	METAL CHIP	1K	5%	1/10W (RG190: RU/RG290: RU)
R350	1-216-833-11	METAL CHIP	10K	5%	1/10W (RG190: E2, E51, EA, AR/RG290: E2, E51, AR)
R351	1-216-825-11	METAL CHIP	2.2K	5%	1/10W (RG190: RU/RG290: RU)
R351	1-216-833-11	METAL CHIP	10K	5%	1/10W (RG190: E2, E51, AR/RG290: E2, E51, AR)
R351	1-216-835-11	METAL CHIP	100K	5%	1/10W (RG190: EA)
R352	1-216-821-11	METAL CHIP	1K	5%	1/10W (R190: AEP/RG290: AEP, UK)
R352	1-216-833-11	METAL CHIP	10K	5%	1/10W (RG290: MX)
R352	1-216-853-11	METAL CHIP	470K	5%	1/10W (RG190: EA)
R353	1-216-833-11	METAL CHIP	10K	5%	1/10W
R354	1-216-833-11	METAL CHIP	10K	5%	1/10W (RG290)
R355	1-216-845-11	METAL CHIP	100K	5%	1/10W (RG290)
R356	1-216-853-11	METAL CHIP	470K	5%	1/10W (RG290)
R363	1-216-864-11	SHORT CHIP	0		
R364	1-216-864-11	SHORT CHIP	0		
R365	1-216-864-11	SHORT CHIP	0		
R366	1-216-864-11	SHORT CHIP	0		
R372	1-216-809-11	METAL CHIP	100	5%	1/10W (RG290: MX)
R381	1-216-821-11	METAL CHIP	1K	5%	1/10W
R382	1-216-821-11	METAL CHIP	1K	5%	1/10W
R383	1-216-821-11	METAL CHIP	1K	5%	1/10W
R901	1-216-845-11	METAL CHIP	100K	5%	1/10W
R902	1-216-864-11	SHORT CHIP	0		
R903	1-216-833-11	METAL CHIP	10K	5%	1/10W
R904	1-216-825-11	METAL CHIP	2.2K	5%	1/10W
R905	1-216-833-11	METAL CHIP	10K	5%	1/10W
R907	1-216-841-11	METAL CHIP	47K	5%	1/10W
R908	1-216-841-11	METAL CHIP	47K	5%	1/10W
R909	1-216-837-11	METAL CHIP	22K	5%	1/10W
R910	1-216-833-11	METAL CHIP	10K	5%	1/10W
R911	1-216-821-11	METAL CHIP	1K	5%	1/10W
R912	1-216-821-11	METAL CHIP	1K	5%	1/10W
R913	1-216-821-11	METAL CHIP	1K	5%	1/10W
R914	1-216-833-11	METAL CHIP	10K	5%	1/10W
R918	1-216-849-11	METAL CHIP	220K	5%	1/10W
R919	1-216-864-11	SHORT CHIP	0		
R920	1-216-853-11	METAL CHIP	470K	5%	1/10W
R921	1-216-809-11	METAL CHIP	100	5%	1/10W
R922	1-216-849-11	METAL CHIP	220K	5%	1/10W
R923	1-216-809-11	METAL CHIP	100	5%	1/10W
R924	1-216-809-11	METAL CHIP	100	5%	1/10W
R925	1-216-809-11	METAL CHIP	100	5%	1/10W (RG290: MX)
R925	1-216-821-11	METAL CHIP	1K	5%	1/10W (RG190: AEP/G290: AEP, UK)
R932	1-216-825-11	METAL CHIP	2.2K	5%	1/10W
R935	1-216-833-11	METAL CHIP	10K	5%	1/10W
R936	1-216-837-11	METAL CHIP	22K	5%	1/10W
R941	1-216-825-11	METAL CHIP	2.2K	5%	1/10W
R942	1-216-833-11	METAL CHIP	10K	5%	1/10W
R943	1-216-829-11	METAL CHIP	4.7K	5%	1/10W
R944	1-216-849-11	METAL CHIP	220K	5%	1/10W

Ref. No.	Part No.	Description			Remark
R945	1-216-813-11	METAL CHIP	220	5%	1/10W
R946	1-216-864-11	SHORT CHIP	0		
R947	1-216-849-11	METAL CHIP	220K	5%	1/10W
R948	1-216-825-11	METAL CHIP	2.2K	5%	1/10W
R949	1-216-833-11	METAL CHIP	10K	5%	1/10W
R950	1-216-829-11	METAL CHIP	4.7K	5%	1/10W
R951	1-216-813-11	METAL CHIP	220	5%	1/10W
R952	1-216-841-11	METAL CHIP	47K	5%	1/10W
R953	1-216-833-11	METAL CHIP	10K	5%	1/10W
R955	1-216-821-11	METAL CHIP	1K	5%	1/10W
R956	1-216-809-11	METAL CHIP	100	5%	1/10W
R957	1-216-809-11	METAL CHIP	100	5%	1/10W
R959	1-216-809-11	METAL CHIP	100	5%	1/10W
R961	1-216-809-11	METAL CHIP	100	5%	1/10W (RG290: MX)
R961	1-216-821-11	METAL CHIP	1K	5%	1/10W (RG190: AEP/G290: AEP, UK)
R963	1-216-809-11	METAL CHIP	100	5%	1/10W
R965	1-216-809-11	METAL CHIP	100	5%	1/10W
R967	1-216-809-11	METAL CHIP	100	5%	1/10W
R968	1-216-809-11	METAL CHIP	100	5%	1/10W (RG290: MX)
R969	1-216-809-11	METAL CHIP	100	5%	1/10W
R970	1-216-809-11	METAL CHIP	100	5%	1/10W
R971	1-216-809-11	METAL CHIP	100	5%	1/10W
R972	1-216-809-11	METAL CHIP	100	5%	1/10W
R973	1-216-809-11	METAL CHIP	100	5%	1/10W
R974	1-216-809-11	METAL CHIP	100	5%	1/10W
R975	1-216-809-11	METAL CHIP	100	5%	1/10W
R976	1-216-809-11	METAL CHIP	100	5%	1/10W
R977	1-216-809-11	METAL CHIP	100	5%	1/10W (RG290: MX)
R979	1-216-809-11	METAL CHIP	100	5%	1/10W
R980	1-216-809-11	METAL CHIP	100	5%	1/10W
R981	1-216-809-11	METAL CHIP	100	5%	1/10W
R982	1-216-817-11	METAL CHIP	470	5%	1/10W
R996	1-216-809-11	METAL CHIP	100	5%	1/10W
R997	1-216-809-11	METAL CHIP	100	5%	1/10W
R999	1-216-809-11	METAL CHIP	100	5%	1/10W
		< VIBRATOR >			
X901	1-579-463-11	VIBRATOR, CRYSTAL (32.768kHz)			
X902	1-795-482-11	VIBRATOR, CERAMIC (16MHz)			

****

	A-1159-739-A	MIC. AUX. HP BOARD, COMPLETE (RG190: AEP, RU, E3, EA, SP, AUS/ RG290: AEP, UK, RU, E3, SP, AUS)			
	A-1159-740-A	MIC. AUX. HP BOARD, COMPLETE (RG190: E2, E51, AR/RG290: E2, E51, AR)			
	A-1159-741-A	MIC. AUX. HP BOARD, COMPLETE(RG290: MX)			
		**********			
		< CAPACITOR >			
C781	1-162-964-11	CERAMIC CHIP	0.001uF	10%	50V (RG190: E2, E51, AR/RG290: E2, E51, MX, AR)
C781	1-162-966-11	CERAMIC CHIP	0.0022uF	10%	50V (RG190: AEP, RU, E3, EA, SP, AUS/ RG290: AEP, UK, RU, E3, SP, AUS)
C782	1-162-964-11	CERAMIC CHIP	0.001uF	10%	50V (RG190: E2, E51, AR/RG290: E2, E51, MX, AR)
C782	1-162-966-11	CERAMIC CHIP	0.0022uF	10%	50V (RG190: AEP, RU, E3, EA, SP, AUS/ RG290: AEP, UK, RU, E3, SP, AUS)
C783	1-165-621-11	CERAMIC CHIP	0.1uF		50V
C784	1-165-621-11	CERAMIC CHIP	0.1uF		50V
C801	1-126-157-11	ELECT	10uF	20%	16V (RG190: E2, E51, AR/RG290: E2, E51, MX, AR)
C802	1-115-416-11	CERAMIC CHIP	0.001uF	5%	25V (RG190: E2, E51, AR/RG290: E2, E51, MX, AR)
C803	1-136-157-00	FILM	0.022uF	5%	50V (RG190: E2, E51, AR/RG290: E2, E51, MX, AR)
C805	1-136-157-00	FILM	0.022uF	5%	50V (RG190: E2, E51, AR/RG290: E2, E51, MX, AR)
C807	1-115-416-11	CERAMIC CHIP	0.001uF	5%	25V (RG190: E2, E51, AR/RG290: E2, E51, MX, AR)
C808	1-164-230-11	CERAMIC CHIP	220PF	5%	50V (RG190: E2, E51, AR/RG290: E2, E51, MX, AR)
C809	1-126-157-11	ELECT	10uF	20%	16V (RG190: E2, E51, AR/RG290: E2, E51, MX, AR)
C810	1-164-315-11	CERAMIC CHIP	470PF	5%	50V (RG190: E2, E51, AR/RG290: E2, E51, MX, AR)
C811	1-124-463-00	ELECT	0.1uF	20%	50V (RG190: E2, E51, AR/RG290: E2, E51, MX, AR)
C813	1-125-972-11	ELECT	100uF	20%	16V (RG190: E2, E51, AR/RG290: E2, E51, MX, AR)
C814	1-124-257-00	ELECT	2.2uF	20%	50V (RG190: E2, E51, AR/RG290: E2, E51, MX, AR)
C815	1-162-923-11	CERAMIC CHIP	47PF	5%	50V (RG190: E2, E51, AR/RG290: E2, E51, MX, AR)
C816	1-164-816-11	CERAMIC CHIP	220PF	2%	50V (RG190: E2, E51, AR/RG290: E2, E51, MX, AR)
C817	1-124-257-00	ELECT	2.2uF	20%	50V (RG190: E2, E51, AR/RG290: E2, E51, MX, AR)
C818	1-126-157-11	ELECT	10uF	20%	16V (RG190: E2, E51, AR/RG290: E2, E51, MX, AR)
C819	1-164-156-11	CERAMIC CHIP	0.1uF		25V (RG190: E2, E51, AR/RG290: E2, E51, MX, AR)
C820	1-162-964-11	CERAMIC CHIP	0.001uF	10%	50V (RG190: AEP, RU, E3, EA, SP, AUS/ RG290: AEP, UK, RU, E3, SP, AUS)
C821	1-162-964-11	CERAMIC CHIP	0.001uF	10%	50V (RG190: AEP, RU, E3, EA, SP, AUS/ RG290: AEP, UK, RU, E3, SP, AUS)
C833	1-164-156-11	CERAMIC CHIP	0.1uF		25V (RG190: E2, E51, AR/RG290: E2, E51, MX, AR)
C851	1-126-160-11	ELECT	1uF	20%	50V (RG290: MX)
C852	1-162-964-11	CERAMIC CHIP	0.001uF	10%	50V (RG290: MX)
C853	1-165-176-11	CERAMIC CHIP	0.047uF	10%	16V (RG290: MX)
C854	1-164-227-11	CERAMIC CHIP	0.022uF	10%	25V (RG290: MX)
C856	1-162-968-11	CERAMIC CHIP	0.0047uF	10%	50V (RG290: MX)
C857	1-124-465-00	ELECT	0.47uF	20%	50V (RG290: MX)
C858	1-124-465-00	ELECT	0.47uF	20%	50V (RG290: MX)
C859	1-107-826-11	CERAMIC CHIP	0.1uF	10%	16V (RG290: MX)

Ref. No.	Part No.	Description	Remark
C861	1-126-160-11	ELECT 1uF 20% 50V	(RG290: MX)
C862	1-165-176-11	CERAMIC CHIP 0.047uF 10% 16V	(RG290: MX)
C863	1-124-257-00	ELECT 2.2uF 20% 50V	(RG290: MX)
C864	1-162-964-11	CERAMIC CHIP 0.001uF 10% 50V	(RG290: MX)
C865	1-162-968-11	CERAMIC CHIP 0.0047uF 10% 50V	(RG290: MX)
C867	1-165-176-11	CERAMIC CHIP 0.047uF 10% 16V	(RG290: MX)
C868	1-164-227-11	CERAMIC CHIP 0.022uF 10% 25V	(RG290: MX)
C869	1-124-589-11	ELECT 47uF 20% 16V	(RG290: MX)
C870	1-124-589-11	ELECT 47uF 20% 16V	(RG290: MX)
		< DIODE >	
D851	6-501-167-01	DIODE UDZW-TE17-5.1B (RG290: MX)	
		< EARTH TERMINAL >	
* EP701	1-537-738-21	TERMINAL, EARTH	
* EP801	1-537-738-21	TERMINAL, EARTH	(RG190: E2, E51, AR/RG290: E2, E51, MX, AR)
		< IC >	
IC801	8-759-909-71	IC BA4558F	(RG190: E2, E51, AR/RG290: E2, E51, MX, AR)
IC802	8-759-496-41	IC M65850FP-E1 (RG290: MX)	
		< JACK >	
J701	1-794-702-11	JACK, HEADPHONE (PHONES)	
J702	1-794-702-11	JACK, HEADPHONE (AUDIO IN)	
JK801	1-816-573-11	JACK (MIC 1) (RG290: MX)	
JK802	1-816-573-11	JACK (MIC)	(RG190: E2, E51, AR/RG290: E2, E51, AR)
JK802	1-816-573-11	JACK (MIC 2) (RG290: MX/)	
		< JUMPER RESISTOR >	
JR801	1-216-864-11	SHORT CHIP 0	(RG190: E2, E51, AR/RG290: E2, E51, AR)
JR802	1-216-864-11	SHORT CHIP 0	(RG190: E2, E51, AR/RG290: E2, E51, AR)
		< TRANSISTOR >	
Q801	8-729-120-28	TRANSISTOR 2SC1623-L5L6	(RG190: E2, E51, AR/RG290: E2, E51, MX, AR)
		< RESISTOR >	
R801	1-216-829-11	METAL CHIP 4.7K 5% 1/10W	(RG290: MX)
R802	1-216-864-11	SHORT CHIP 0 (RG290: MX)	
R803	1-216-829-11	METAL CHIP 4.7K 5% 1/10W	(RG190: E2, E51, AR/RG290: E2, E51, MX, AR)
R804	1-216-864-11	SHORT CHIP 0	(RG190: E2, E51, AR/RG290: E2, E51, MX, AR)
R805	1-216-845-11	METAL CHIP 100K 5% 1/10W	(RG190: E2, E51, AR/RG290: E2, E51, MX, AR)
R806	1-216-845-11	METAL CHIP 100K 5% 1/10W	(RG190: E2, E51, AR/RG290: E2, E51, MX, AR)
R807	1-216-833-11	METAL CHIP 10K 5% 1/10W	(RG190: E2, E51, AR/RG290: E2, E51, MX, AR)
R808	1-216-833-11	METAL CHIP 10K 5% 1/10W	(RG190: E2, E51, AR/RG290: E2, E51, MX, AR)
R809	1-216-845-11	METAL CHIP 100K 5% 1/10W	(RG190: E2, E51, AR/RG290: E2, E51, MX, AR)
R810	1-216-821-11	METAL CHIP 1K 5% 1/10W	(RG190: E2, E51, AR/RG290: E2, E51, MX, AR)
R811	1-216-841-11	METAL CHIP 47K 5% 1/10W	(RG190: E2, E51, AR/RG290: E2, E51, MX, AR)
R812	1-216-809-11	METAL CHIP 100 5% 1/10W	(RG190: E2, E51, AR/RG290: E2, E51, MX, AR)
R813	1-216-833-11	METAL CHIP 10K 5% 1/10W	(RG190: E2, E51, AR/RG290: E2, E51, MX, AR)
R814	1-216-849-11	METAL CHIP 220K 5% 1/10W	(RG190: E2, E51, AR/RG290: E2, E51, MX, AR)
R815	1-216-809-11	METAL CHIP 100 5% 1/10W	(RG190: E2, E51, AR/RG290: E2, E51, MX, AR)
R816	1-216-845-11	METAL CHIP 100K 5% 1/10W	(RG190: E2, E51, AR/RG290: E2, E51, MX, AR)
R817	1-216-829-11	METAL CHIP 4.7K 5% 1/10W	(RG190: E2, E51, AR/RG290: E2, E51, MX, AR)
R818	1-216-829-11	METAL CHIP 4.7K 5% 1/10W	(RG190: E2, E51, AR/RG290: E2, E51, MX, AR)
R819	1-216-853-11	METAL CHIP 470K 5% 1/10W	(RG190: E2, E51, AR/RG290: E2, E51, MX, AR)
R820	1-216-837-11	METAL CHIP 22K 5% 1/10W	(RG190: E2, E51, AR/RG290: E2, E51, MX, AR)
R821	1-216-833-11	METAL CHIP 10K 5% 1/10W	(RG190: E2, E51, AR/RG290: E2, E51, MX, AR)
R823	1-216-825-11	METAL CHIP 2.2K 5% 1/10W	
R824	1-216-837-11	METAL CHIP 22K 5% 1/10W	
R825	1-216-821-11	METAL CHIP 1K 5% 1/10W	
R826	1-216-821-11	METAL CHIP 1K 5% 1/10W	
R827	1-216-833-11	METAL CHIP 10K 5% 1/10W	
R831	1-216-853-11	METAL CHIP 470K 5% 1/10W	
R832	1-216-853-11	METAL CHIP 470K 5% 1/10W	
R851	1-216-837-11	METAL CHIP 22K 5% 1/10W	(RG290: MX)
R852	1-216-837-11	METAL CHIP 22K 5% 1/10W	(RG290: MX)
R853	1-216-837-11	METAL CHIP 22K 5% 1/10W	(RG290: MX)
R854	1-216-841-11	METAL CHIP 47K 5% 1/10W	(RG290: MX)
R855	1-216-837-11	METAL CHIP 22K 5% 1/10W	(RG290: MX)
R856	1-216-833-11	METAL CHIP 10K 5% 1/10W	(RG290: MX)
R857	1-216-837-11	METAL CHIP 22K 5% 1/10W	(RG290: MX)
R858	1-216-837-11	METAL CHIP 22K 5% 1/10W	(RG290: MX)
R859	1-216-837-11	METAL CHIP 22K 5% 1/10W	(RG290: MX)
R860	1-216-845-11	METAL CHIP 100K 5% 1/10W	(RG290: MX)
R861	1-216-817-11	METAL CHIP 470 5% 1/10W	(RG290: MX)

Ref. No.	Part No.	Description			Remark
R862	1-216-817-11	METAL CHIP	470	5%	1/10W (RG290: MX)
		< VARIABLE RESISTOR >			
VR801	1-223-983-11	RES, VAR, CARBON 50K (MIC LEVEL) (RG190: E2, E51, AR/RG290: E2, E51, MX, AR)			
VR851	1-223-983-11	RES, VAR, CARBON 50K (ECHO LEVEL)			(RG290: MX)
**********					
	1-687-133-12	MOTOR (LD) BOARD			
		**********			
**********					
	1-687-134-12	MOTOR (TB) BOARD			
		**********			
		< CONNECTOR >			
CN742	1-784-727-11	CONNECTOR, FFC 5P			
**********					
	A-1163-359-A	PANEL BOARD, COMPLETE			(EXCEPT RG290: MX)
	A-1163-360-A	PANEL BOARD, COMPLETE (RG290: MX)			
		**********			
	2-658-282-01	GUIDE, FL			
		< CAPACITOR >			
C621	1-126-961-11	ELECT	2.2uF	20%	50V
C622	1-126-961-11	ELECT	2.2uF	20%	50V
C625	1-128-131-11	ELECT	22uF	20%	50V
C631	1-126-947-11	ELECT	47uF	20%	35V
C641	1-162-970-11	CERAMIC CHIP	0.01uF	10%	25V
C642	1-162-970-11	CERAMIC CHIP	0.01uF	10%	25V
C701	1-164-156-11	CERAMIC CHIP	0.1uF		25V
C702	1-126-947-11	ELECT	47uF	20%	35V
C703	1-164-156-11	CERAMIC CHIP	0.1uF		25V
C704	1-162-962-11	CERAMIC CHIP	470PF	10%	50V
C705	1-162-962-11	CERAMIC CHIP	470PF	10%	50V
C707	1-162-968-11	CERAMIC CHIP	0.0047uF	10%	50V
C708	1-164-156-11	CERAMIC CHIP	0.1uF		25V
C709	1-126-947-11	ELECT	47uF	20%	35V
C710	1-164-156-11	CERAMIC CHIP	0.1uF		25V
C711	1-165-621-11	CERAMIC CHIP	0.1uF		50V
C712	1-126-965-11	ELECT	22uF	20%	50V
		< CONNECTOR >			
CN601	1-784-780-11	CONNECTOR, FFC 19P			
		< DIODE >			
D601	6-501-452-01	LED 1L4345V22DOTDT02 (STREAM)			
D602	6-501-452-01	LED 1L4345V22DOTDT02 (STREAM)			
D603	6-501-452-01	LED 1L4345V22DOTDT02 (STREAM)			
D604	6-501-452-01	LED 1L4345V22DOTDT02 (STREAM)			
D605	6-501-452-01	LED 1L4345V22DOTDT02 (STREAM)			
D711	8-719-000-07	DIODE MC2836			

Ref. No.	Part No.	Description			Remark
		< FLUORESCENT INDICATOR >			
FL701	1-519-871-21	INDICATOR TUBE, FLUORESCENT			
		< IC >			
IC610	6-600-446-01	IC RPM7240-H18			
IC701	6-806-287-01	IC uPD780232GC-509-8BT-A			
		< JUMPER RESISTOR >			
JR602	1-216-864-11	SHORT CHIP	0		
JR603	1-216-864-11	SHORT CHIP	0		
JR604	1-216-864-11	SHORT CHIP	0		
JR605	1-216-864-11	SHORT CHIP	0		
JR606	1-216-864-11	SHORT CHIP	0		
JR607	1-216-864-11	SHORT CHIP	0		
JR608	1-216-864-11	SHORT CHIP	0		
JR609	1-216-864-11	SHORT CHIP	0		
JR610	1-216-864-11	SHORT CHIP	0		
JR611	1-216-864-11	SHORT CHIP	0		
JR612	1-216-864-11	SHORT CHIP	0		
JR613	1-216-864-11	SHORT CHIP	0		
JR614	1-216-864-11	SHORT CHIP	0		
		< TRANSISTOR >			
Q601	8-729-120-28	TRANSISTOR	2SC1623-L5L6		
Q602	8-729-120-28	TRANSISTOR	2SC1623-L5L6		
Q603	8-729-120-28	TRANSISTOR	2SC1623-L5L6		
Q604	8-729-120-28	TRANSISTOR	2SC1623-L5L6		
Q605	8-729-120-28	TRANSISTOR	2SC1623-L5L6		
Q701	6-551-276-01	TRANSISTOR	RT1N431C-TP-1		
Q702	6-551-276-01	TRANSISTOR	RT1N431C-TP-1		
Q703	6-551-276-01	TRANSISTOR	RT1N431C-TP-1		
Q704	8-729-040-76	TRANSISTOR	KTA1273-Y-AT		
Q705	8-729-037-13	TRANSISTOR	KTA1271Y		
Q706	8-729-037-13	TRANSISTOR	KTA1271Y		
		< RESISTOR >			
R601	1-216-821-11	METAL CHIP	1K	5%	1/10W
R602	1-216-821-11	METAL CHIP	1K	5%	1/10W
R603	1-216-821-11	METAL CHIP	1K	5%	1/10W
R604	1-216-821-11	METAL CHIP	1K	5%	1/10W
R605	1-216-821-11	METAL CHIP	1K	5%	1/10W
R607	1-216-833-11	METAL CHIP	10K	5%	1/10W
R608	1-216-833-11	METAL CHIP	10K	5%	1/10W
R609	1-216-809-11	METAL CHIP	100	5%	1/10W
R610	1-216-845-11	METAL CHIP	100K	5%	1/10W
R611	1-216-821-11	METAL CHIP	1K	5%	1/10W
R612	1-216-821-11	METAL CHIP	1K	5%	1/10W
R613	1-216-821-11	METAL CHIP	1K	5%	1/10W
R614	1-216-821-11	METAL CHIP	1K	5%	1/10W
R615	1-216-821-11	METAL CHIP	1K	5%	1/10W
R617	1-216-833-11	METAL CHIP	10K	5%	1/10W
R618	1-216-833-11	METAL CHIP	10K	5%	1/10W
R627	1-216-809-11	METAL CHIP	100	5%	1/10W
R628	1-216-805-11	METAL CHIP	47	5%	1/10W
R629	1-216-809-11	METAL CHIP	100	5%	1/10W
R631	1-216-833-11	METAL CHIP	10K	5%	1/10W

Ref. No.	Part No.	Description			Remark
R632	1-216-833-11	METAL CHIP	10K	5%	1/10W
R633	1-216-833-11	METAL CHIP	10K	5%	1/10W
R634	1-216-833-11	METAL CHIP	10K	5%	1/10W
R635	1-216-833-11	METAL CHIP	10K	5%	1/10W
R650	1-216-837-11	METAL CHIP	22K	5%	1/10W
R651	1-216-841-11	METAL CHIP	47K	5%	1/10W
R660	1-216-837-11	METAL CHIP	22K	5%	1/10W
R661	1-216-841-11	METAL CHIP	47K	5%	1/10W
R662	1-216-825-11	METAL CHIP	2.2K	5%	1/10W
R663	1-216-825-11	METAL CHIP	2.2K	5%	1/10W
R670	1-216-837-11	METAL CHIP	22K	5%	1/10W
R671	1-216-841-11	METAL CHIP	47K	5%	1/10W
R672	1-216-825-11	METAL CHIP	2.2K	5%	1/10W
R673	1-216-825-11	METAL CHIP	2.2K	5%	1/10W
R674	1-216-829-11	METAL CHIP	4.7K	5%	1/10W
R680	1-216-837-11	METAL CHIP	22K	5%	1/10W
R681	1-216-841-11	METAL CHIP	47K	5%	1/10W
R690	1-216-833-11	METAL CHIP	10K	5%	1/10W
R701	1-216-864-11	SHORT CHIP	0		
R702	1-216-813-11	METAL CHIP	220	5%	1/10W
R703	1-216-809-11	METAL CHIP	100	5%	1/10W
R704	1-216-864-11	SHORT CHIP	0		
R705	1-216-809-11	METAL CHIP	100	5%	1/10W
R706	1-216-809-11	METAL CHIP	100	5%	1/10W
R707	1-216-809-11	METAL CHIP	100	5%	1/10W
R708	1-216-809-11	METAL CHIP	100	5%	1/10W
R709	1-216-825-11	METAL CHIP	2.2K	5%	1/10W
R710	1-216-821-11	METAL CHIP	1K	5%	1/10W
R711	1-216-821-11	METAL CHIP	1K	5%	1/10W
R712	1-216-821-11	METAL CHIP	1K	5%	1/10W
R713	1-216-864-11	SHORT CHIP	0		
R715	1-216-809-11	METAL CHIP	100	5%	1/10W
R716	1-216-809-11	METAL CHIP	100	5%	1/10W
R717	1-216-809-11	METAL CHIP	100	5%	1/10W
R718	1-216-809-11	METAL CHIP	100	5%	1/10W
R719	1-216-809-11	METAL CHIP	100	5%	1/10W
R741	1-216-801-11	METAL CHIP	22	5%	1/10W
R742	1-216-801-11	METAL CHIP	22	5%	1/10W
R743	1-216-837-11	METAL CHIP	22K	5%	1/10W
R744	1-216-837-11	METAL CHIP	22K	5%	1/10W
R745	1-216-829-11	METAL CHIP	4.7K	5%	1/10W
R746	1-216-829-11	METAL CHIP	4.7K	5%	1/10W
R762	1-216-841-11	METAL CHIP	47K	5%	1/10W
R763	1-216-825-11	METAL CHIP	2.2K	5%	1/10W
R764	1-216-841-11	METAL CHIP	47K	5%	1/10W
R765	1-216-841-11	METAL CHIP	47K	5%	1/10W
R766	1-216-825-11	METAL CHIP	2.2K	5%	1/10W
R771	1-216-821-11	METAL CHIP	1K	5%	1/10W
R772	1-216-833-11	METAL CHIP	10K	5%	1/10W
R773	1-216-821-11	METAL CHIP	1K	5%	1/10W
R774	1-216-833-11	METAL CHIP	10K	5%	1/10W
R775	1-216-821-11	METAL CHIP	1K	5%	1/10W
R776	1-216-833-11	METAL CHIP	10K	5%	1/10W
		< SWITCH >			
S611	1-762-875-21	SWITCH, KEYBOARD (◁◁, SELECT FOLDER +)			
S612	1-762-875-21	SWITCH, KEYBOARD (▷▷I, TUNING +)			
S613	1-762-875-21	SWITCH, KEYBOARD (▷II)			

Ref. No.	Part No.	Description			Remark
S621	1-762-875-21	SWITCH, KEYBOARD (◁◁, SELECT FOLDER –)			
S622	1-762-875-21	SWITCH, KEYBOARD (I◁◁, TUNING –)			
S623	1-762-875-21	SWITCH, KEYBOARD (□)			
S671	1-479-670-11	ENCODER, ROTARY (VOLUME)			
		< VIBRATOR >			
X701	1-795-054-21	VIBRATOR, CERAMIC (4.19MHz)			
**********					
	A-1163-402-A	POWER BOARD, COMPLETE			(RG290: AEP, UK, RU)
	A-1163-403-A	POWER BOARD, COMPLETE			(RG290: E3, SP, AUS)
	A-1163-404-A	POWER BOARD, COMPLETE			(RG290: E2, E51, MX, AR)
	A-1163-446-A	POWER BOARD, COMPLETE (RG190: AEP, RU)			
	A-1163-447-A	POWER BOARD, COMPLETE			(RG190: E3, EA, SP, AUS)
	A-1163-448-A	POWER BOARD, COMPLETE			(RG190: E2, E51, AR)
		**********			
	7-685-872-01	SCREW +BVTT 3X8 (S)			
		< CAPACITOR/JUMPER RESISTOR >			
C403	1-137-749-11	MYLAR	0.1uF		100V
C404	1-137-749-11	MYLAR	0.1uF		100V
C405	1-135-832-21	ELECT	2200uF	20%	50V (RG190: AEP, RU, E3, EA, SP, AUS)
C405	1-135-928-21	ELECT	2200uF	20%	63V (RG290: AEP, UK, RU, E3, SP, AUS)
C405	1-137-839-11	ELECT	2200uF	20%	50V (RG190: E2, E51, AR)
C405	1-137-840-11	ELECT	2200uF	20%	63V (RG290: E2, E51, MX, AR)
C406	1-135-832-21	ELECT	2200uF	20%	50V (RG190: AEP, RU, E3, EA, SP, AUS)
C406	1-135-928-21	ELECT	2200uF	20%	63V (RG290: AEP, UK, RU, E3, SP, AUS)
C406	1-137-839-11	ELECT	2200uF	20%	50V (RG190: E2, E51, AR)
C406	1-137-840-11	ELECT	2200uF	20%	63V (RG290: E2, E51, MX, AR)
C411	1-162-970-11	CERAMIC CHIP	0.01uF	10%	25V
C441	1-126-964-11	ELECT	10uF	20%	50V
C442	1-126-964-11	ELECT	10uF	20%	50V
C443	1-162-964-11	CERAMIC CHIP	0.001uF	10%	50V
C444	1-162-964-11	CERAMIC CHIP	0.001uF	10%	50V
C445	1-162-927-11	CERAMIC CHIP	100PF	5%	50V
C446	1-162-927-11	CERAMIC CHIP	100PF	5%	50V
C447	1-126-965-11	ELECT	22uF	20%	50V
C448	1-126-965-11	ELECT	22uF	20%	50V
C451	1-136-497-81	FILM	0.1uF	5%	50V
C452	1-136-497-81	FILM	0.1uF	5%	50V
C453	1-136-497-81	FILM	0.1uF	5%	50V
C454	1-136-497-81	FILM	0.1uF	5%	50V
C459	1-102-074-00	CERAMIC	0.001uF	10%	50V (RG190: AEP, RU)
C459	1-104-987-11	MYLAR	0.001uF	5%	200V (RG290: AEP, UK, RU)

Ref. No.	Part No.	Description			Remark
C460	1-102-074-00	CERAMIC	0.001uF	10%	50V (RG190: AEP, RU)
C460	1-104-987-11	MYLAR	0.001uF	5%	200V (RG290: AEP, UK, RU)
C481	1-104-665-11	ELECT	100uF	20%	25V
C486	1-126-961-11	ELECT	2.2uF	20%	50V
C488	1-126-965-11	ELECT	22uF	20%	50V
C489	1-126-967-11	ELECT	47uF	20%	50V (RG190)
C489	1-128-552-51	ELECT	47uF	20%	63V (RG290)
C490	1-126-968-11	ELECT	100uF	20%	50V (RG190)
C490	1-128-576-11	ELECT	100uF	20%	63V (RG490)
C491	1-162-964-11	CERAMIC CHIP	0.001uF	10%	50V (RG190: AEP, RU/RG290: AEP, UK, RU)
C493	1-162-964-11	CERAMIC CHIP	0.001uF	10%	50V (RG190: AEP, RU)
C493	1-162-966-11	CERAMIC CHIP	0.0022uF	10%	50V (RG290: AEP, UK, RU)
C494	1-162-966-11	CERAMIC CHIP	0.0022uF	10%	50V (RG290: AEP, UK, RU)
C494	1-216-864-11	SHORT CHIP	0 (RG190: AEP, RU)		
		< CONNECTOR >			
* CN441	1-573-087-11	PIN, CONNECTOR 13P			
		< DIODE >			
D401	6-500-360-01	DIODE D10XB20			
D441	8-719-000-07	DIODE MC2836			
D443	8-719-988-61	DIODE 1SS355TE-17			
D481	8-719-988-61	DIODE 1SS355TE-17			
D483	8-719-988-61	DIODE 1SS355TE-17			
		< IC >			
IC441	6-600-221-01	IC STK403-130-E (RG290)			
IC441	6-704-107-01	IC STK403-100-E (RG190: E2, E3, E51, EA, SP, AR, AUS)			
IC441	6-705-845-01	IC STK403-090 (RG190: AEP, RU)			
		< TERMINAL BOARD>			
JK441	1-694-785-11	TERMINAL BOARD (SPEAKER)			
		< COIL >			
L441	1-422-009-13	COIL, AIR-CORE			
L442	1-422-009-13	COIL, AIR-CORE			
		< TRANSISTOR >			
Q441	6-551-268-01	TRANSISTOR	2SC5625		
Q442	6-551-268-01	TRANSISTOR	2SC5625		
Q481	8-729-120-28	TRANSISTOR	2SC1623-L5L6		
Q482	8-729-120-28	TRANSISTOR	2SC1623-L5L6		
Q483	8-729-120-28	TRANSISTOR	2SC1623-L5L6		
Q484	8-729-120-28	TRANSISTOR	2SC1623-L5L6		
Q485	8-729-600-22	TRANSISTOR	2SA1235-F		
Q486	8-729-120-28	TRANSISTOR	2SC1623-L5L6		
Q487	8-729-120-28	TRANSISTOR	2SC1623-L5L6		
Q488	8-729-120-28	TRANSISTOR	2SC1623-L5L6		

Ref. No.	Part No.	Description			Remark
Q489	6-551-268-01	TRANSISTOR	2SC5625 (RG290)		
Q489	8-729-120-28	TRANSISTOR	2SC1623-L5L6 (RG190)		
		< RESISTOR >			
R401	1-216-845-11	METAL CHIP	100K	5%	1/10W
R402	1-216-845-11	METAL CHIP	100K	5%	1/10W
R407	1-216-809-11	METAL CHIP	100	5%	1/10W
R411	1-216-797-11	METAL CHIP	10	5%	1/10W
R412	1-216-797-11	METAL CHIP	10	5%	1/10W
R413	1-216-797-11	METAL CHIP	10	5%	1/10W
R414	1-216-797-11	METAL CHIP	10	5%	1/10W
R415	1-216-797-11	METAL CHIP	10	5%	1/10W
R416	1-216-797-11	METAL CHIP	10	5%	1/10W
R417	1-216-809-11	METAL CHIP	100	5%	1/10W
R418	1-216-809-11	METAL CHIP	100	5%	1/10W
R419	1-216-809-11	METAL CHIP	100	5%	1/10W
R420	1-216-797-11	METAL CHIP	10	5%	1/10W
R421	1-216-797-11	METAL CHIP	10	5%	1/10W
R422	1-216-797-11	METAL CHIP	10	5%	1/10W
R423	1-216-797-11	METAL CHIP	10	5%	1/10W
R424	1-216-797-11	METAL CHIP	10	5%	1/10W
R425	1-216-797-11	METAL CHIP	10	5%	1/10W
R434	1-216-864-11	SHORT CHIP	0		
R435	1-216-864-11	SHORT CHIP	0		
R440	1-216-837-11	METAL CHIP	22K	5%	1/10W
R441	1-216-825-11	METAL CHIP	2.2K	5%	1/10W
R442	1-216-825-11	METAL CHIP	2.2K	5%	1/10W
R443	1-216-841-11	METAL CHIP	47K	5%	1/10W
R444	1-216-841-11	METAL CHIP	47K	5%	1/10W
R445	1-216-821-11	METAL CHIP	1K	5%	1/10W
R446	1-216-821-11	METAL CHIP	1K	5%	1/10W
R447	1-216-841-11	METAL CHIP	47K	5%	1/10W
R448	1-216-841-11	METAL CHIP	47K	5%	1/10W
⚠R449	1-212-974-00	FUSIBLE	47	5%	1/2W F
⚠R451	1-208-602-11	METAL	0.22	10%	2W F (RG190)
⚠R451	1-220-893-11	METAL	0.22	10%	5W F (RG290)
⚠R452	1-208-602-11	METAL	0.22	10%	2W F (RG190)
⚠R452	1-220-893-11	METAL	0.22	10%	5W F (RG290)
R453	1-216-797-11	METAL CHIP	10	5%	1/10W
R454	1-216-797-11	METAL CHIP	10	5%	1/10W
R455	1-216-821-11	METAL CHIP	1K	5%	1/10W
R456	1-216-821-11	METAL CHIP	1K	5%	1/10W
R457	1-216-837-11	METAL CHIP	22K	5%	1/10W
R458	1-216-837-11	METAL CHIP	22K	5%	1/10W
R459	1-216-841-11	METAL CHIP	47K	5%	1/10W
R460	1-216-841-11	METAL CHIP	47K	5%	1/10W
R461	1-216-797-11	METAL CHIP	10	5%	1/10W
R462	1-216-797-11	METAL CHIP	10	5%	1/10W
R465	1-216-841-11	METAL CHIP	47K	5%	1/10W
R466	1-216-845-11	METAL CHIP	100K	5%	1/10W
R468	1-216-825-11	METAL CHIP	2.2K	5%	1/10W (RG190: AEP, RU)
R469	1-216-825-11	METAL CHIP	2.2K	5%	1/10W (RG190: AEP, RU)
R480	1-216-845-11	METAL CHIP	100K	5%	1/10W

Ref. No.	Part No.	Description			Remark
R481	1-216-829-11	METAL CHIP	4.7K	5%	1/10W
R482	1-216-833-11	METAL CHIP	10K	5%	1/10W
R483	1-216-801-11	METAL CHIP	22	5%	1/10W
R484	1-216-845-11	METAL CHIP	100K	5%	1/10W
R485	1-216-845-11	METAL CHIP	100K	5%	1/10W
R486	1-216-845-11	METAL CHIP	100K	5%	1/10W
R487	1-216-841-11	METAL CHIP	47K	5%	1/10W
R488	1-216-837-11	METAL CHIP	22K	5%	1/10W
R490	1-216-829-11	METAL CHIP	4.7K	5%	1/10W
R491	1-216-833-11	METAL CHIP	10K	5%	1/10W
R492	1-216-821-11	METAL CHIP	1K	5%	1/10W
R493	1-216-841-11	METAL CHIP	47K	5%	1/10W
⚠R495	1-202-972-61	FUSIBLE	1	5%	1/4W F
⚠R496	1-212-881-11	FUSIBLE	100	5%	1/4W F
R497	1-216-845-11	METAL CHIP	100K	5%	1/10W
R498	1-216-821-11	METAL CHIP	1K	5%	1/10W
R499	1-216-821-11	METAL CHIP	1K	5%	1/10W
		< RELAY >			
RY441	1-755-307-11	RELAY			
		< THERMISTOR >			
TH441	1-807-796-11	THERMISTOR			

****

	1-687-132-12	SENSOR BOARD			
		**********			
		< CONNECTOR >			
CN731	1-785-329-21	PIN, CONNECTOR (LIGHT ANGLE) 3P			
		< IC >			
IC731	6-600-022-01	IC RPI-576			

****

	1-687-669-12	SW BOARD			
		*********			
		< SWITCH >			
S751	1-786-514-11	SWITCH, LEVER (SLIDE) (DISC TABLE OPEN/CLOSE DETECT)			

****

Ref. No.	Part No.	Description			Remark
	A-1163-242-A	TRANSFORMER BOARD, COMPLETE (RG290: AEP, UK, RU)			
	A-1163-243-A	TRANSFORMER BOARD, COMPLETE (RG290: E2, E3, E51, SP)			
	A-1163-244-A	TRANSFORMER BOARD, COMPLETE (RG290: AUS)			
	A-1163-246-A	TRANSFORMER BOARD, COMPLETE (RG290: AR)			
	A-1163-247-A	TRANSFORMER BOARD, COMPLETE (RG290: MX)			
	A-1163-460-A	TRANSFORMER BOARD, COMPLETE (RG190: AEP, RU)			
	A-1163-461-A	TRANSFORMER BOARD, COMPLETE (RG190: E2, E3, E51, SP)			
	A-1163-463-A	TRANSFORMER BOARD, COMPLETE (RG190: AUS)			
	A-1163-464-A	TRANSFORMER BOARD, COMPLETE (RG190: EA)			
	A-1163-465-A	TRANSFORMER BOARD, COMPLETE (RG190: AR)			
		**********			
	1-533-233-31	FUSE HOLDER			
		< CAPACITOR >			
C907	1-136-497-81	FILM	0.1uF	5%	50V
C908	1-128-553-11	ELECT	220uF	20%	63V
C909	1-126-964-11	ELECT	10uF	20%	50V
C910	1-126-968-11	ELECT	100uF	20%	50V
C911	1-126-942-61	ELECT	1000uF	20%	25V
		< CONNECTOR >			
* CN901	1-793-660-11	PIN, CONNECTOR (PC BOARD) 3P			
CN903	1-819-131-11	PIN, CONNECTOR 3P			
CN907	1-819-139-11	PIN, CONNECTOR 11P			
		< DIODE >			
D901	8-719-988-61	DIODE 1SS355TE-17			
D902	6-500-522-21	DIODE 10EDB40-TB3			
D903	6-500-522-21	DIODE 10EDB40-TB3			
D904	6-500-522-21	DIODE 10EDB40-TB3			
D905	6-500-522-21	DIODE 10EDB40-TB3			
D906	6-501-184-01	DIODE UDZW-TE17-27B			
D908	6-500-522-21	DIODE 10EDB40-TB3			
D910	8-719-000-08	DIODE MC2838 (RG190: AEP, RU, E2, E3, E51, SP/RG290: AEP, UK, RU, E2, E3, E51, MX, SP)			
D910	6-500-335-01	DIODE MC2838 -T112-1 (RG190: EA, AR, AUS/RG290: AR, AUS)			
		< TRANSFORMER >			
⚠PT902	1-443-927-11	TRANSFORMER, POWER (RG190: EA/RG290: MX)			
⚠PT902	1-443-928-11	TRANSFORMER, POWER (RG190: E2, E3, E51, SP, AR, AUS/ RG290: E2, E3, E51, SP, AR, AUS)			
⚠PT902	1-443-929-11	TRANSFORMER, POWER (RG190: AEP, RU/ RG290: AEP, UK, RU)			
		< TRANSISTOR >			
Q902	8-729-048-66	TRANSISTOR	2SB1238-PQR-TV2		
		< RESISTOR >			
R903	1-216-833-11	METAL CHIP	10K	5%	1/10W

TRANSFORMER **VIDEO OUT**

Ref. No.	Part No.	Description			Remark
R904	1-216-821-11	METAL CHIP	1K	5%	1/10W
⚠R908	1-202-972-61	FUSIBLE	1	5%	1/4W F
R910	1-216-801-11	METAL CHIP	22	5%	1/10W (EXCEPT RG290: MX)
R910	1-216-864-11	SHORT CHIP	0 (RG290)		
R911	1-216-864-11	SHORT CHIP	0		
R914	1-216-833-11	METAL CHIP	10K	5%	1/10W
		< RELAY >			
⚠RY901	1-755-276-11	RELAY, POWER (RG290: MX)			
⚠RY901	1-755-334-11	RELAY, AC POWER (EXCEPT RG290: MX)			
		< SWITCH >			
⚠S901	1-786-055-31	SELECTOR, VOLTAGE (VOLTAGE SELECTOR) (RG190: E2, E3, E51, EA, SP/ RG290: E2, E3, E51, SP)			

****

VIDEO OUT BOARD (RG290: MX)
****

		< CAPACITOR >			
C803	1-100-566-91	CERAMIC CHIP	0.1uF	10%	25V
		< JACK >			
J803	1-774-227-11	JACK, PIN 1P (VIDEO OUT)			

****

MISCELLANEOUS
****

5	1-832-838-21	WIRE (FLAT TYPE) (13 CORE) (RG290: MX)
61	1-831-952-21	CABLE, FLEXIBLE FLAT (19 CORE)
62	1-831-779-21	CABLE, FLEXIBLE FLAT (11 CORE)
158	1-417-656-21	MECHA DECK (CWN42FF609)
168	1-831-772-21	CABLE, FLEXIBLE FLAT (9 CORE) (RG190: AEP, RU, E3, EA, SP, AUS/ RG290: AEP, UK, RU, E3, SP, AUS)
168	1-831-789-21	CABLE, FLEXIBLE FLAT (13 CORE) (RG190: E2, E51, AR/RG290: E2, E51, MX, AR)
204	1-693-710-11	TUNER (FM/AM) (RG190: RU/RG290: RU)
204	1-693-711-11	TUNER (FM/AM) (RG190: E2, E3, E51, EA, SP, AR, AUS/ RG290: E2, E3, E51, MX, SP, AR, AUS)
204	1-693-712-11	TUNER (FM/AM) (RG190: AEP/RG290: AEP, UK)
205	1-831-619-21	CABLE, FLEXIBLE FLAT (11 CORE) (RG190: AEP/RG290: AEP, UK)
205	1-831-769-21	CABLE, FLEXIBLE FLAT (9 CORE) (RG190: RU, E2, E3, E51, EA, SP, AR, AUS/ RG290: RU, E2, E3, E51, MX, SP, AR, AUS)
206	1-831-786-21	CABLE, FLEXIBLE FLAT (13 CORE)
208	1-831-771-21	CABLE, FLEXIBLE FLAT (23 CORE) (EXCEPT RG290: MX)
208	1-832-043-21	CABLE, FLEXIBLE FLAT (31 CORE) (RG290: MX)
303	1-831-928-21	CABLE, FLEXIBLE FLAT (11 CORE)
⚠306	1-775-790-71	CORD, POWER (RG190: AUS/RG290: AUS)
⚠306	1-827-226-31	CORD, POWER (RG190: E2, E3/RG290: E2, E3, MX)
⚠306	1-829-387-11	CORD, POWER (RG190: AR/RG290: AR)
⚠306	1-830-188-11	CORD, POWER (RG190: AEP, RU, E51, SP/ RG290: AEP, RU, E51, SP)
309	1-500-868-11	CORE, FERRITE (RG290: MX)
502	1-828-938-51	WIRE (FLAT TYPE) (5 CORE)
576	1-832-404-21	CABLE, FLEXIBLE FLAT (16 CORE)
⚠579	8-820-244-01	OPTICAL PICK-UP BLOCK (KSM-215DCP/C2NP) (MX)
⚠579	A-4735-357-A	OPTICAL PICK-UP BLOCK (KSM-213DHAP) (EXCEPT MX)
580	1-471-035-21	MAGNET ASSY
⚠F904	1-532-506-33	FUSE (T6.3AL/250V) (RG190)
⚠F904	1-533-949-33	FUSE, CYLINDRICAL (TIME LUG) (T8AL/250V) (RG290)
⚠F905	1-532-506-33	FUSE (T6.3AL/250V) (RG190)
⚠F905	1-533-949-33	FUSE, CYLINDRICAL (TIME LUG) (T8AL/250V) (RG290)
⚠F906	1-532-464-33	FUSE (T2.5AL/250V) (RG190: AEP, RU)
⚠F906	1-532-465-33	FUSE (T3.15AL/250V) (RG190: E2, E3, E51, EA, SP, AR, AUS/RG290)
⚠F907	1-532-464-33	FUSE (T2.5AL/250V) (RG190: AEP, RU)
⚠F907	1-532-465-33	FUSE (T3.15AL/250V) (RG190: E2, E3, E51, EA, SP, AR, AUS/RG290)
M001	1-787-319-12	FAN, DC
M741	A-1108-965-A	MOTOR ASSY, TABLE
M751	A-1108-966-A	MOTOR ASSY, LOADING
⚠PT901	1-443-921-11	TRANSFORMER, POWER (RG290: AEP, UK, RU)
⚠PT901	1-443-932-11	TRANSFORMER, POWER (RG290: MX)
⚠PT901	1-443-934-11	TRANSFORMER, POWER (RG190: E2, E3, E51, SP, AR, AUS)
⚠PT901	1-443-936-11	TRANSFORMER, POWER (RG190: AEP, RU)
⚠PT901	1-443-937-11	TRANSFORMER, POWER (RG290: E2, E3, E51, SP, AR, AUS)
⚠PT901	1-443-938-11	TRANSFORMER, POWER (RG190: EA)
S101	1-771-853-11	SWITCH, DETECTION (LIMIT)
S711	1-477-680-12	ENCODER, ROTARY (DISC TABLE ADDRESS DETECT)

****

ACCESSORIES
****

⚠	1-569-007-12	ADAPTOR, CONVERSION 2P (RG190: E3/RG290: E3)
⚠	1-569-008-32	ADAPTOR, CONVERSION 2P (RG190: E51, SP/RG290: E51, SP)
⚠	1-770-019-61	ADAPTOR, CONVERSION PLUG (RG190: EA/RG290: UK)

HCD-RG190/RG290

SONY

SERVICE MANUAL

Ver. 1.1 2006.04

AEP Model
E Model
Australian Model
HCD-RG190/RG290
UK Model
Mexican Model
HCD-RG290

SUPPLEMENT-1

Subject: Change of DECK board (Suffix-12)

In this set, DECK board has been changed in the midway of production. Printed wiring board and schematic diagram of new type, and changed parts list are described in this supplement-1.
Refer to original service manual and supplement-2 for other information.

1. NEW/FORMER DESCRIPTION

– DECK Board (Component Side) –

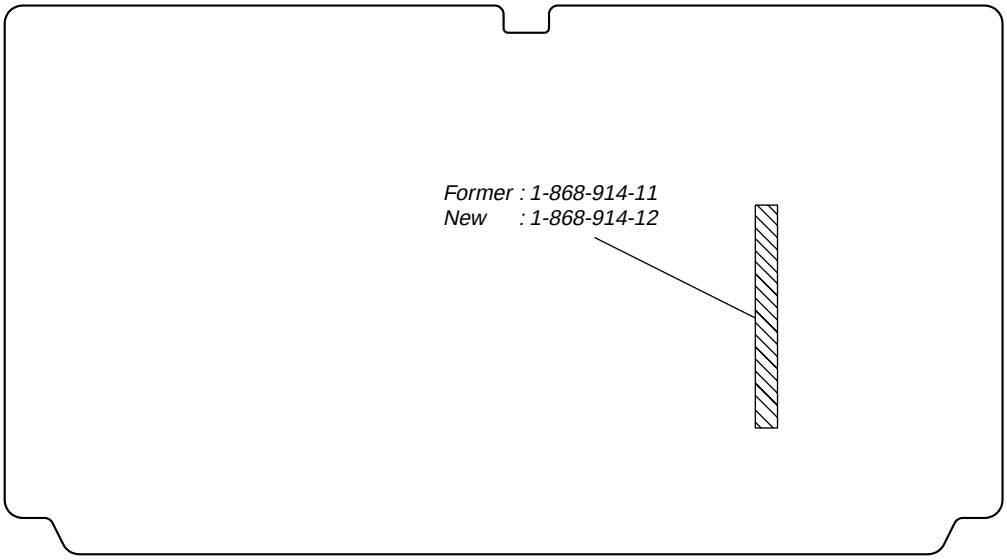

9-887-145-81

2. DIAGRAMS

• Note for Printed Wiring Boards and Schematic Diagrams

Note on Printed Wiring Board:

- : parts extracted from the component side.
- : parts extracted from the conductor side.
- : Pattern from the side which enables seeing.

(The other layers' patterns are not indicated.)

- Indication of transistor

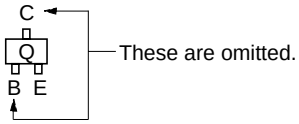

Note on Schematic Diagram:

- All capacitors are in µF unless otherwise noted. (p: pF) 50 WV or less are not indicated except for electrolytics and tantalums.
- All resistors are in Ω and 1/4 W or less unless otherwise specified.

Note: The components identified by mark ⚠ or dotted line with mark ⚠ are critical for safety.
Replace only with part number specified.

- : B+ Line.
- Voltages and waveforms are dc with respect to ground under no-signal (detuned) conditions.
  ⟨⟨ ⟩⟩ : TAPE PLAY
  { } : REC
- Voltages are taken with a VOM (Input impedance 10 MΩ). Voltage variations may be noted due to normal production tolerances.
- Signal path.
  : TAPE PLAY (DECK-A)
  : TAPE PLAY (DECK-B)
  : REC
- Abbreviation
  MX : Mexican model

2-1. PRINTED WIRING BOARD – DECK Board – : Uses unleaded solder.

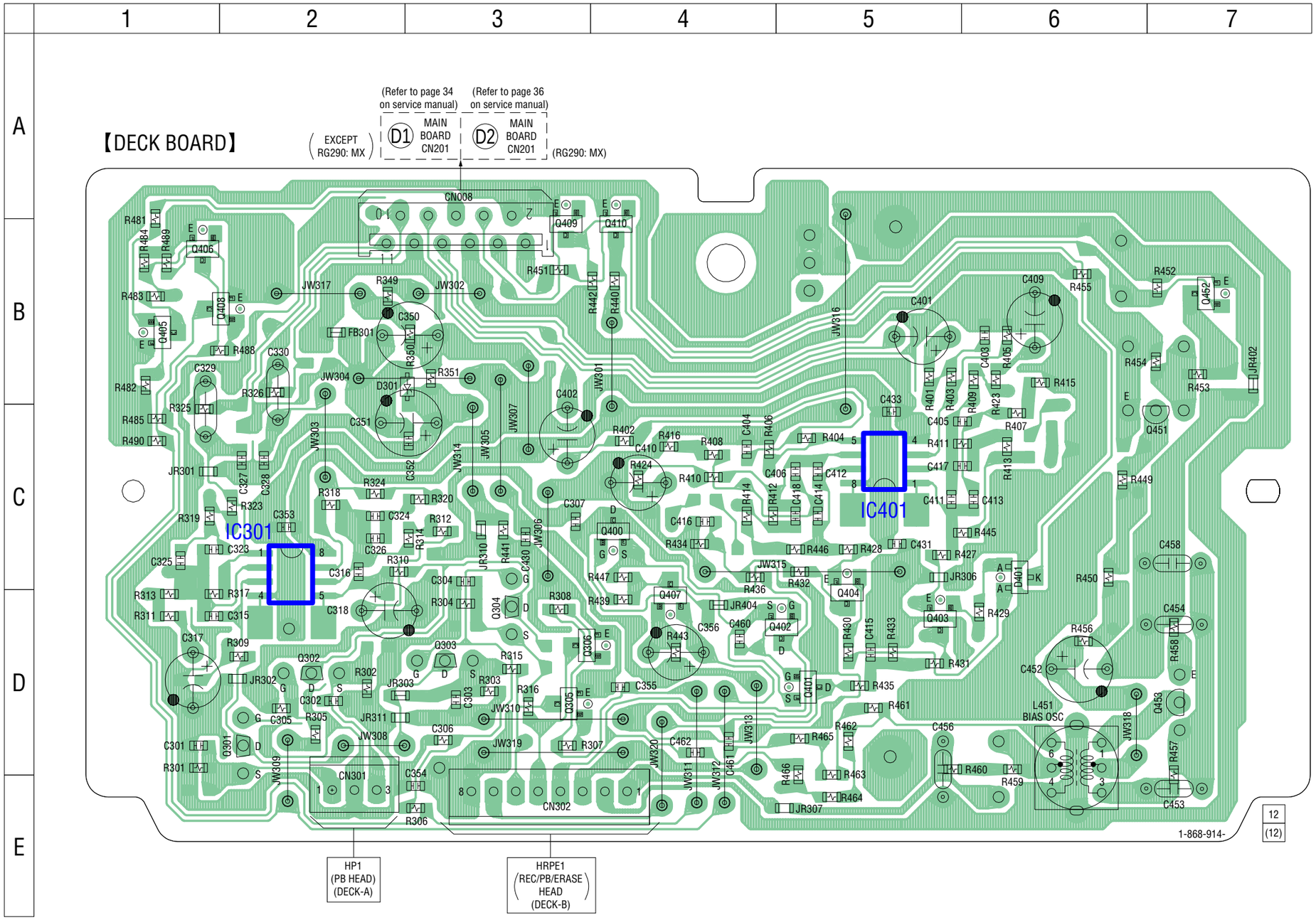

- **Semiconductor Location**

Ref. No.	Location
D301	B-3
D401	C-6
IC301	C-2
IC401	C-5
Q301	D-2
Q302	D-2
Q303	D-3
Q304	D-3
Q305	D-3
Q306	D-3
Q400	C-4
Q401	D-5
Q402	D-5
Q403	D-5
Q404	D-5
Q405	B-1
Q406	B-1
Q407	D-4
Q408	B-2
Q409	B-3
Q410	B-4
Q451	C-7
Q452	B-7
Q453	D-7

2-2. SCHEMATIC DIAGRAM – DECK Board –

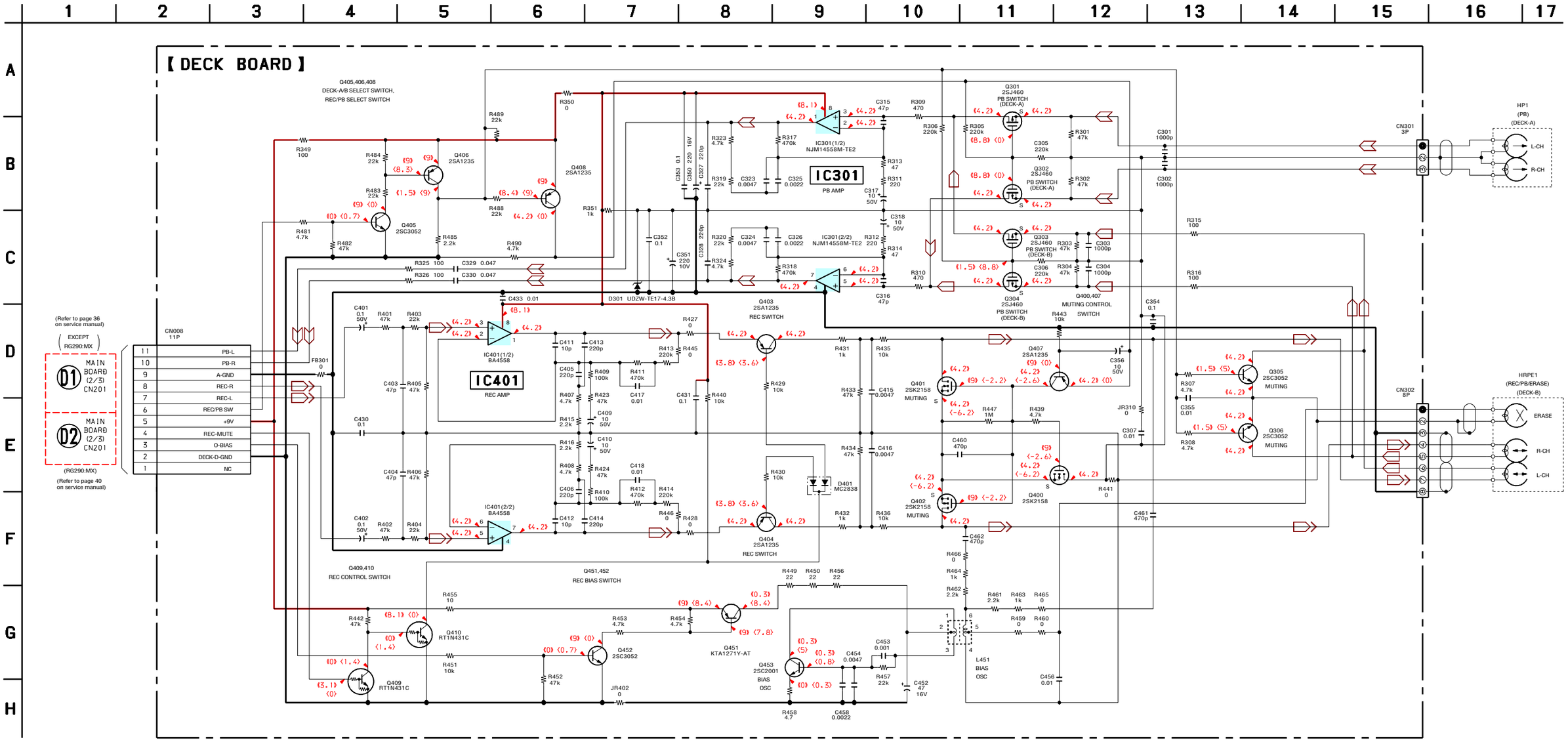

DECK

3. ELECTRICAL PARTS LIST

NOTE:

- Due to standardization, replacements in the parts list may be different from the parts specified in the diagrams or the components used on the set.
- -XX and -X mean standardized parts, so they may have some difference from the original one.
- RESISTORS
  All resistors are in ohms.
  METAL: Metal-film resistor.
  METAL OXIDE: Metal oxide-film resistor.
  F: nonflammable
- Items marked "*" are not stocked since they are seldom required for routine service. Some delay should be anticipated when ordering these items.
- SEMICONDUCTORS
  In each case, u: µ, for example:
  uA... : µA... uPA... : µPA...
  uPB... : µPB... uPC... : µPC...
  uPD... : µPD...
- CAPACITORS
  uF: µF
- COILS
  uH: µH

When indicating parts by reference number, please include the board.

Ref. No.	Part No.	Description			Remark
	A-1171-482-A	DECK BOARD, COMPLETE			
		**********			
		< CAPACITOR/RESISTOR >			
C301	1-162-964-11	CERAMIC CHIP	0.001uF	10%	50V
C302	1-162-964-11	CERAMIC CHIP	0.001uF	10%	50V
C303	1-162-964-11	CERAMIC CHIP	0.001uF	10%	50V
C304	1-162-964-11	CERAMIC CHIP	0.001uF	10%	50V
C305	1-216-849-11	METAL CHIP	220K	5%	1/10W
C306	1-216-849-11	METAL CHIP	220K	5%	1/10W
C307	1-162-970-11	CERAMIC CHIP	0.01uF	10%	25V
C315	1-162-923-11	CERAMIC CHIP	47PF	5%	50V
C316	1-162-923-11	CERAMIC CHIP	47PF	5%	50V
C317	1-126-964-11	ELECT	10uF	20%	50V
C318	1-126-964-11	ELECT	10uF	20%	50V
C323	1-162-968-11	CERAMIC CHIP	0.0047uF	10%	50V
C324	1-162-968-11	CERAMIC CHIP	0.0047uF	10%	50V
C325	1-162-966-11	CERAMIC CHIP	0.0022uF	10%	50V
C326	1-162-966-11	CERAMIC CHIP	0.0022uF	10%	50V
C327	1-162-960-11	CERAMIC CHIP	220PF	10%	50V
C328	1-162-960-11	CERAMIC CHIP	220PF	10%	50V
C329	1-136-161-00	MYLAR	0.047uF	5%	50V
C330	1-136-161-00	MYLAR	0.047uF	5%	50V
C350	1-126-934-11	ELECT	220uF	20%	16V
C351	1-126-934-11	ELECT	220uF	20%	16V
C352	1-107-826-11	CERAMIC CHIP	0.1uF	10%	16V
C353	1-107-826-11	CERAMIC CHIP	0.1uF	10%	16V
C354	1-107-826-11	CERAMIC CHIP	0.1uF	10%	16V
C355	1-162-970-11	CERAMIC CHIP	0.01uF	10%	25V
C356	1-126-964-11	ELECT	10uF	20%	50V
C401	1-126-956-11	ELECT	0.1uF	20%	50V
C402	1-126-956-11	ELECT	0.1uF	20%	50V
C403	1-162-923-11	CERAMIC CHIP	47PF	5%	50V
C404	1-162-923-11	CERAMIC CHIP	47PF	5%	50V
C405	1-162-960-11	CERAMIC CHIP	220PF	10%	50V
C406	1-162-960-11	CERAMIC CHIP	220PF	10%	50V
C409	1-126-964-11	ELECT	10uF	20%	50V
C410	1-126-964-11	ELECT	10uF	20%	50V
C411	1-162-915-11	CERAMIC CHIP	10PF	0.5PF	50V
C412	1-162-915-11	CERAMIC CHIP	10PF	0.5PF	50V
C413	1-162-960-11	CERAMIC CHIP	220PF	10%	50V
C414	1-162-960-11	CERAMIC CHIP	220PF	10%	50V
C415	1-162-968-11	CERAMIC CHIP	0.0047uF	10%	50V
C416	1-162-968-11	CERAMIC CHIP	0.0047uF	10%	50V
C417	1-107-726-91	CERAMIC CHIP	0.01uF	10%	16V
C418	1-107-726-91	CERAMIC CHIP	0.01uF	10%	16V
C430	1-164-156-11	CERAMIC CHIP	0.1uF		25V
C431	1-164-156-11	CERAMIC CHIP	0.1uF		25V
C433	1-162-970-11	CERAMIC CHIP	0.01uF	10%	25V
C452	1-126-947-11	ELECT	47uF	20%	35V
C453	1-130-471-00	MYLAR	0.001uF	5%	50V
C454	1-130-479-00	MYLAR	0.0047uF	5%	50V
C456	1-130-483-00	MYLAR	0.01uF	5%	50V
C458	1-130-475-00	MYLAR	0.0022uF	5%	50V
C460	1-162-962-11	CERAMIC CHIP	470PF	10%	50V
C461	1-162-962-11	CERAMIC CHIP	470PF	10%	50V
C462	1-162-962-11	CERAMIC CHIP	470PF	10%	50V
		< CONNECTOR >			
CN008	1-568-830-11	CONNECTOR, FFC 11P			
CN301	1-815-444-11	PIN, CONNECTOR (PWB) 3P			
CN302	1-815-449-11	PIN, CONNECTOR (PWB) 8P			
		< DIODE >			
D301	6-501-165-01	DIODE UDZW-TE17-4.3B			
D401	6-500-335-01	DIODE MC2838-T112-1			
		< JUMPER RESISTOR >			
FB301	1-216-864-11	SHORT CHIP	0		
		< IC >			
IC301	6-702-457-01	IC NJM14558M-TE2			
IC401	8-759-909-71	IC BA4558F			
		< JUMPER RESISTOR >			
JR301	1-216-864-11	SHORT CHIP	0		
JR302	1-216-864-11	SHORT CHIP	0		
JR306	1-216-864-11	SHORT CHIP	0		
JR307	1-216-864-11	SHORT CHIP	0		
JR310	1-216-864-11	SHORT CHIP	0		
JR311	1-216-864-11	SHORT CHIP	0		
JR402	1-216-864-11	SHORT CHIP	0		
JR404	1-216-864-11	SHORT CHIP	0		
		< TRANSFORMER >			
L451	1-443-760-11	TRANSFORMER, BIAS OSCILLATION			

DECK

Ref. No.	Part No.	Description			Remark
		< TRANSISTOR >			
Q301	6-550-290-01	FET	2SJ460-T		
Q302	6-550-290-01	FET	2SJ460-T		
Q303	6-550-290-01	FET	2SJ460-T		
Q304	6-550-290-01	FET	2SJ460-T		
Q305	8-729-120-28	TRANSISTOR	2SC1623-L5L6		
Q306	8-729-120-28	TRANSISTOR	2SC1623-L5L6		
Q400	8-729-045-62	FET	2SK2158-T2B		
Q401	8-729-045-62	FET	2SK2158-T2B		
Q402	8-729-045-62	FET	2SK2158-T2B		
Q403	8-729-600-22	TRANSISTOR	2SA1235-F		
Q404	8-729-600-22	TRANSISTOR	2SA1235-F		
Q405	8-729-120-28	TRANSISTOR	2SC1623-L5L6		
Q406	8-729-600-22	TRANSISTOR	2SA1235-F		
Q407	8-729-600-22	TRANSISTOR	2SA1235-F		
Q408	8-729-600-22	TRANSISTOR	2SA1235-F		
Q409	6-551-276-01	TRANSISTOR	RT1N431C-TP-1		
Q410	6-551-276-01	TRANSISTOR	RT1N431C-TP-1		
Q451	8-729-037-13	TRANSISTOR	KTA1271Y		
Q452	8-729-120-28	TRANSISTOR	2SC1623-L5L6		
Q453	8-729-011-92	TRANSISTOR	2SC2001TP-K1K2		
		< RESISTOR >			
R301	1-216-841-11	METAL CHIP	47K	5%	1/10W
R302	1-216-841-11	METAL CHIP	47K	5%	1/10W
R303	1-216-841-11	METAL CHIP	47K	5%	1/10W
R304	1-216-841-11	METAL CHIP	47K	5%	1/10W
R305	1-216-849-11	METAL CHIP	220K	5%	1/10W
R306	1-216-849-11	METAL CHIP	220K	5%	1/10W
R307	1-216-829-11	METAL CHIP	4.7K	5%	1/10W
R308	1-216-829-11	METAL CHIP	4.7K	5%	1/10W
R309	1-216-817-11	METAL CHIP	470	5%	1/10W
R310	1-216-817-11	METAL CHIP	470	5%	1/10W
R311	1-216-813-11	METAL CHIP	220	5%	1/10W
R312	1-216-813-11	METAL CHIP	220	5%	1/10W
R313	1-216-805-11	METAL CHIP	47	5%	1/10W
R314	1-216-805-11	METAL CHIP	47	5%	1/10W
R315	1-216-809-11	METAL CHIP	100	5%	1/10W
R316	1-216-809-11	METAL CHIP	100	5%	1/10W
R317	1-216-853-11	METAL CHIP	470K	5%	1/10W
R318	1-216-853-11	METAL CHIP	470K	5%	1/10W
R319	1-216-837-11	METAL CHIP	22K	5%	1/10W
R320	1-216-837-11	METAL CHIP	22K	5%	1/10W
R323	1-216-829-11	METAL CHIP	4.7K	5%	1/10W
R324	1-216-829-11	METAL CHIP	4.7K	5%	1/10W
R325	1-216-809-11	METAL CHIP	100	5%	1/10W
R326	1-216-809-11	METAL CHIP	100	5%	1/10W
R349	1-216-809-11	METAL CHIP	100	5%	1/10W
R350	1-216-864-11	SHORT CHIP	0		
R351	1-216-821-11	METAL CHIP	1K	5%	1/10W
R401	1-216-841-11	METAL CHIP	47K	5%	1/10W
R402	1-216-841-11	METAL CHIP	47K	5%	1/10W
R403	1-216-837-11	METAL CHIP	22K	5%	1/10W
R404	1-216-837-11	METAL CHIP	22K	5%	1/10W
R405	1-216-841-11	METAL CHIP	47K	5%	1/10W
R406	1-216-841-11	METAL CHIP	47K	5%	1/10W
R407	1-216-829-11	METAL CHIP	4.7K	5%	1/10W
R408	1-216-829-11	METAL CHIP	4.7K	5%	1/10W
R409	1-216-845-11	METAL CHIP	100K	5%	1/10W
R410	1-216-845-11	METAL CHIP	100K	5%	1/10W
R411	1-216-853-11	METAL CHIP	470K	5%	1/10W
R412	1-216-853-11	METAL CHIP	470K	5%	1/10W
R413	1-216-849-11	METAL CHIP	220K	5%	1/10W
R414	1-216-849-11	METAL CHIP	220K	5%	1/10W
R415	1-216-825-11	METAL CHIP	2.2K	5%	1/10W
R416	1-216-825-11	METAL CHIP	2.2K	5%	1/10W
R423	1-216-841-11	METAL CHIP	47K	5%	1/10W
R424	1-216-841-11	METAL CHIP	47K	5%	1/10W
R427	1-216-864-11	SHORT CHIP	0		
R428	1-216-864-11	SHORT CHIP	0		
R429	1-216-833-11	METAL CHIP	10K	5%	1/10W
R430	1-216-833-11	METAL CHIP	10K	5%	1/10W
R431	1-216-821-11	METAL CHIP	1K	5%	1/10W
R432	1-216-821-11	METAL CHIP	1K	5%	1/10W
R433	1-216-841-11	METAL CHIP	47K	5%	1/10W
R434	1-216-841-11	METAL CHIP	47K	5%	1/10W
R435	1-216-833-11	METAL CHIP	10K	5%	1/10W
R436	1-216-833-11	METAL CHIP	10K	5%	1/10W
R439	1-216-829-11	METAL CHIP	4.7K	5%	1/10W
R440	1-216-833-11	METAL CHIP	10K	5%	1/10W
R441	1-216-864-11	SHORT CHIP	0		
R442	1-216-841-11	METAL CHIP	47K	5%	1/10W
R443	1-216-833-11	METAL CHIP	10K	5%	1/10W
R445	1-216-864-11	SHORT CHIP	0		
R446	1-216-864-11	SHORT CHIP	0		
R447	1-216-857-11	METAL CHIP	1M	5%	1/10W
R449	1-216-801-11	METAL CHIP	22	5%	1/10W
R450	1-216-801-11	METAL CHIP	22	5%	1/10W
R451	1-216-833-11	METAL CHIP	10K	5%	1/10W
R452	1-216-841-11	METAL CHIP	47K	5%	1/10W
R453	1-216-829-11	METAL CHIP	4.7K	5%	1/10W
R454	1-216-829-11	METAL CHIP	4.7K	5%	1/10W
R455	1-216-797-11	METAL CHIP	10	5%	1/10W
R456	1-216-801-11	METAL CHIP	22	5%	1/10W
R457	1-216-837-11	METAL CHIP	22K	5%	1/10W
R458	1-216-793-11	METAL CHIP	4.7	5%	1/10W
R459	1-216-864-11	SHORT CHIP	0		
R460	1-216-864-11	SHORT CHIP	0		
R461	1-216-825-11	METAL CHIP	2.2K	5%	1/10W
R462	1-216-825-11	METAL CHIP	2.2K	5%	1/10W
R463	1-216-821-11	METAL CHIP	1K	5%	1/10W
R464	1-216-821-11	METAL CHIP	1K	5%	1/10W
R465	1-216-864-11	SHORT CHIP	0		
R466	1-216-864-11	SHORT CHIP	0		
R481	1-216-829-11	METAL CHIP	4.7K	5%	1/10W
R482	1-216-841-11	METAL CHIP	47K	5%	1/10W
R483	1-216-837-11	METAL CHIP	22K	5%	1/10W
R484	1-216-837-11	METAL CHIP	22K	5%	1/10W
R485	1-216-825-11	METAL CHIP	2.2K	5%	1/10W
R488	1-216-837-11	METAL CHIP	22K	5%	1/10W
R489	1-216-837-11	METAL CHIP	22K	5%	1/10W
R490	1-216-829-11	METAL CHIP	4.7K	5%	1/10W

HCD-RG190/RG290

SONY

SERVICE MANUAL

Ver. 1.2 2006.06

AEP Model
E Model
Australian Model
HCD-RG190/RG290
UK Model
Mexican Model
HCD-RG290

SUPPLEMENT-2

Subject: Change of MAIN and KEY RIGHT boards (Suffix-12 (RG290: Mexican model) or Suffix-13 (Except RG290: Mexican model))

In this set, MAIN and KEY RIGHT boards have been changed in the midway of production.
Printed wiring board and schematic diagram of new type, and changed parts list are described in this supplement-2.
Refer to original service manual and supplement-1 for other information.

TABLE OF CONTENTS

1. NEW/FORMER DESCRIPTION 1

2. DIAGRAMS
2-1. Printed Wiring Board – MAIN Board (Except RG290: MX model) – 3
2-2. Schematic Diagram – MAIN Board (1/3) (Except RG290: MX model) – 4
2-3. Schematic Diagram – MAIN Board (2/3) (Except RG290: MX model) – 5
2-4. Schematic Diagram – MAIN Board (3/3) (Except RG290: MX model) – 6
2-5. Printed Wiring Board – MAIN Board (RG290: MX model) – 7
2-6. Schematic Diagram – MAIN Board (1/3) (RG290: MX model) – 8
2-7. Schematic Diagram – MAIN Board (2/3) (RG290: MX model) – 9
2-8. Schematic Diagram – MAIN Board (3/3) (RG290: MX model) – 10
2-9. Printed Wiring Board – KEY RIGHT (Except RG290: MX model) Board – 11
2-10. Schematic Diagram – KEY RIGHT (Except RG290: MX model) Board – 11
2-11. Printed Wiring Board – KEY RIGHT Board (RG290: MX model) – 12
2-12. Schematic Diagram – KEY RIGHT Board (RG290: MX model) – 12

3. ELECTRICAL PARTS LIST 13

- Abbreviation
  MX: Mexican model

1. NEW/FORMER DESCRIPTION

– MAIN Board (Component Side) –

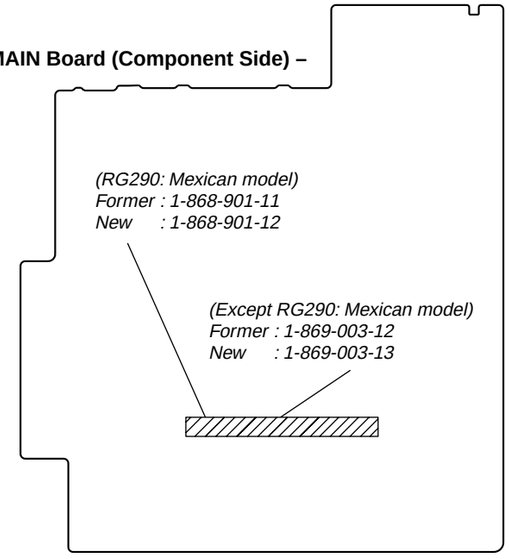

– KEY RIGHT Board (Component Side) –

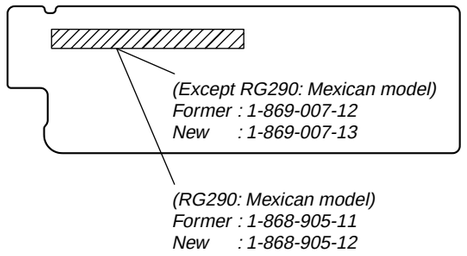

9-887-145-82
HCD-RG190/RG290

2. DIAGRAMS

• Note for Printed Wiring Boards and Schematic Diagrams

Note on Printed Wiring Board:

- ○——— : parts extracted from the component side.
- ——— : parts extracted from the conductor side.
- △ : internal component.
- ▬ : Pattern from the side which enables seeing.

(The other layers' patterns are not indicated.)

- Indication of transistor

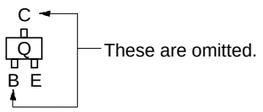

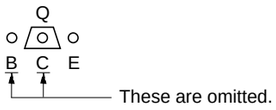

Note on Schematic Diagram:

- All capacitors are in µF unless otherwise noted. (p: pF) 50 WV or less are not indicated except for electrolytics and tantalums.
- All resistors are in Ω and 1/4 W or less unless otherwise specified.
- △ : internal component.
- : nonflammable resistor.
- ▭ : panel designation.

Note: The components identified by mark ⚠ or dotted line with mark ⚠ are critical for safety.
Replace only with part number specified.

- ▬▬ : B+ Line.
- ▬ ▬ ▬ : B– Line.
- Voltages are dc with respect to ground under no-signal (detuned) conditions.
  no mark : TUNER (FM/AM)
  ( ) : CD PLAY
  《 》 : TAPE PLAY
  { } : TAPE REC
- Voltages are taken with a VOM (Input impedance 10 MΩ). Voltage variations may be noted due to normal production tolerances.
- Signal path.
  ⇨ : TUNER (FM/AM)
  : CD PLAY
  : TAPE PLAY
  : REC
  ▷ : MIC
  ➡ : AUDIO IN
  : VIDEO
- Abbreviation

AR	: Argentina model
AUS	: Australian model
E2	: 120 V AC area in E model
E3	: 240 V AC area in E model
E51	: Chilean and Peruvian models
EA	: Saudi Arabia model
MX	: Mexican model
RU	: Russian model
SP	: Singapore model

2-1. PRINTED WIRING BOARD – MAIN Board (Except RG290: MX model) – : Uses unleaded solder.

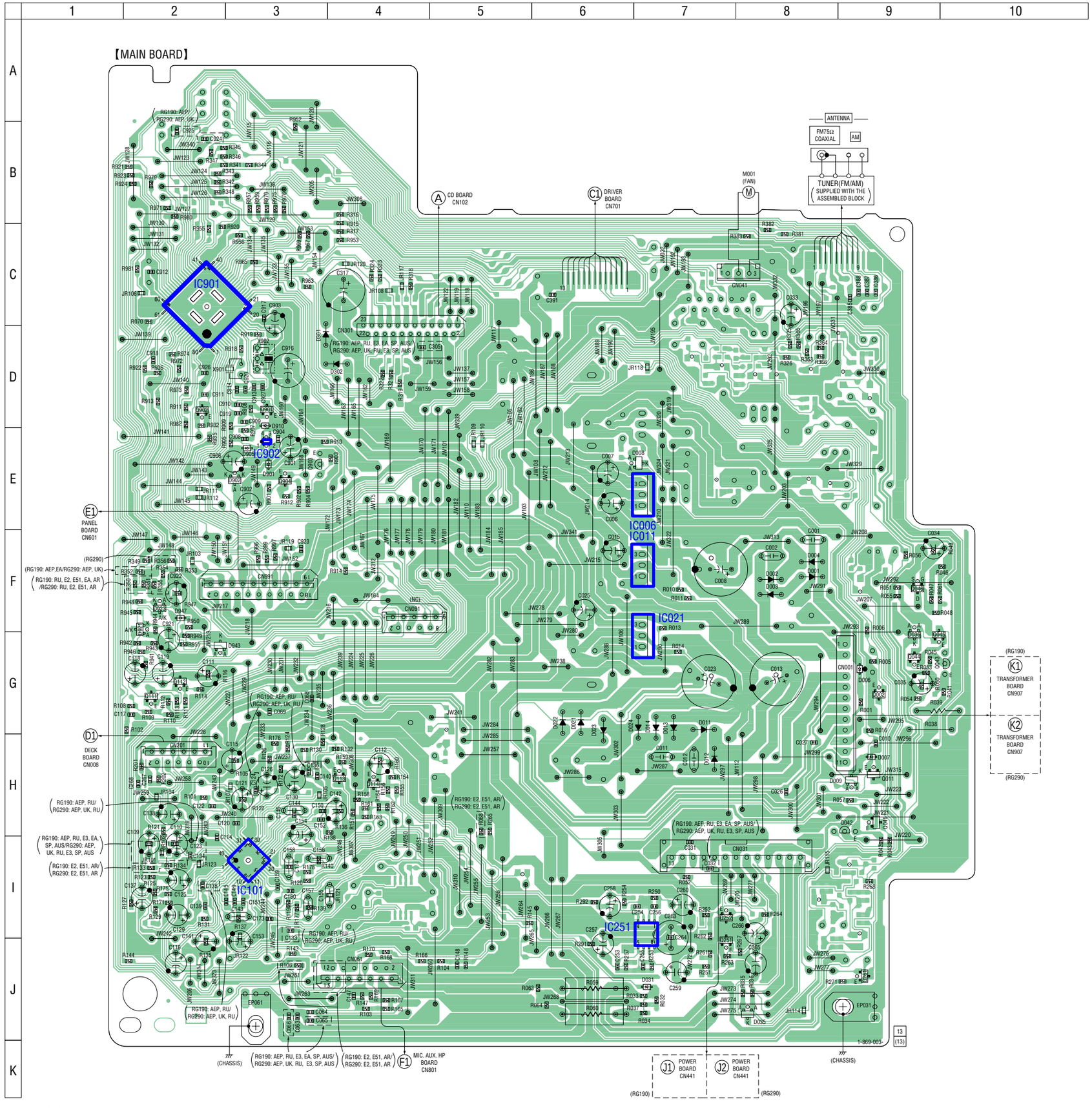

- **Semiconductor Location**

Ref. No.	Location
D001	F-8
D002	F-8
D003	F-8
D004	F-8
D006	G-9
D007	H-9
D008	E-7
D009	H-9
D011	G-7
D012	H-7
D013	G-7
D014	G-7
D021	G-6
D022	G-6
D023	G-6
D024	G-7
D031	J-7
D035	J-8
D036	G-9
D301	D-3
D302	D-4
D901	E-3
D902	E-3
D905	E-3
D910	D-3
D921	F-2
D923	F-2
D943	G-2
D947	F-2
IC006	E-7
IC011	F-7
IC021	G-7
IC101	I-3
IC251	I-7
IC901	C-2
IC902	E-3
Q002	G-9
Q011	H-9
Q041	H-9
Q042	H-9
Q043	G-9
Q044	G-9
Q045	G-9
Q046	F-9
Q111	G-2
Q112	G-2
Q113	H-4
Q114	H-4
Q251	J-7
Q252	I-7
Q261	J-9
Q901	D-3
Q902	D-2
Q903	E-3
Q904	E-3

2-2. SCHEMATIC DIAGRAM – MAIN Board (1/3) (Except RG290: MX model) –

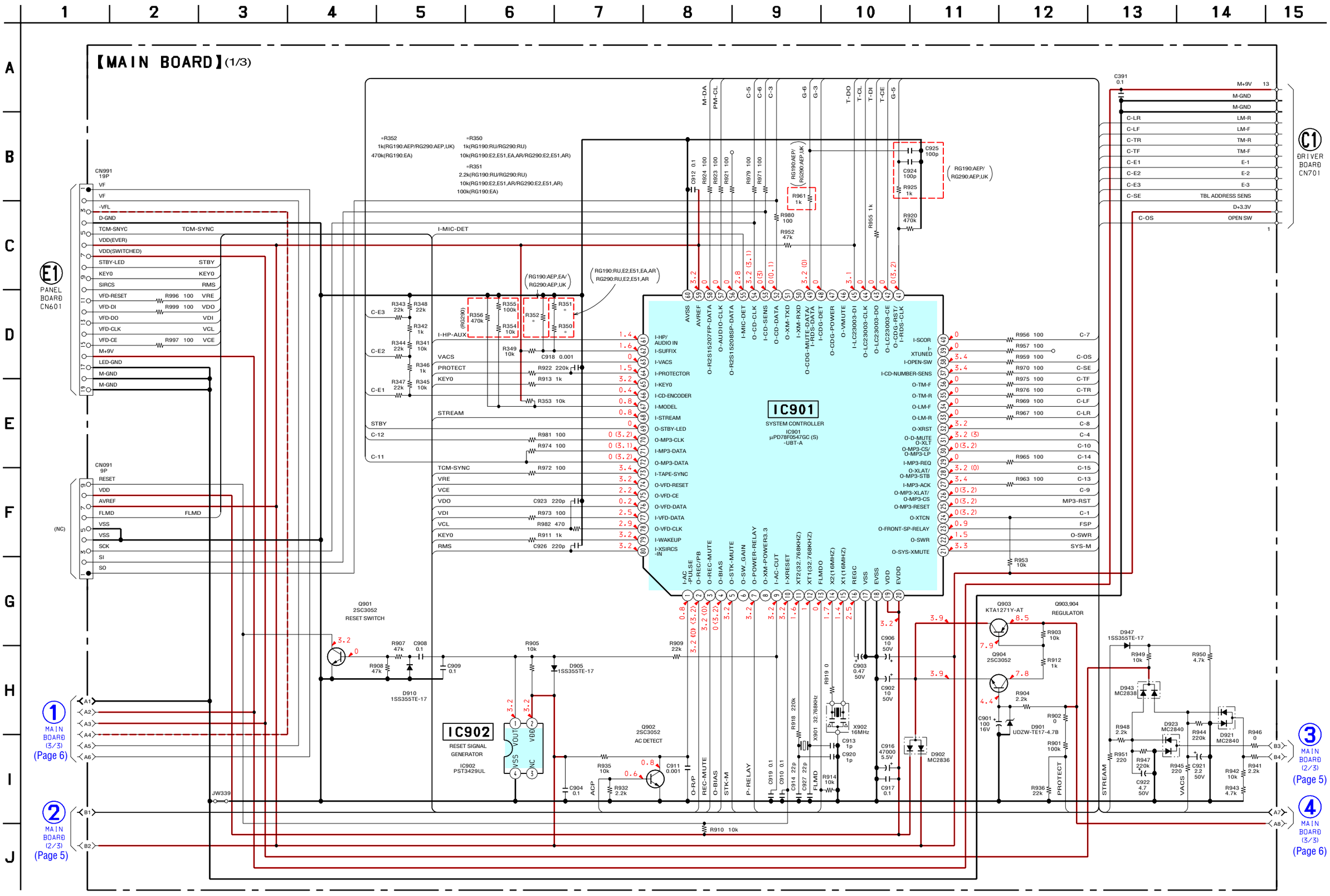

2-3. SCHEMATIC DIAGRAM – MAIN Board (2/3) (Except RG290: MX model) –

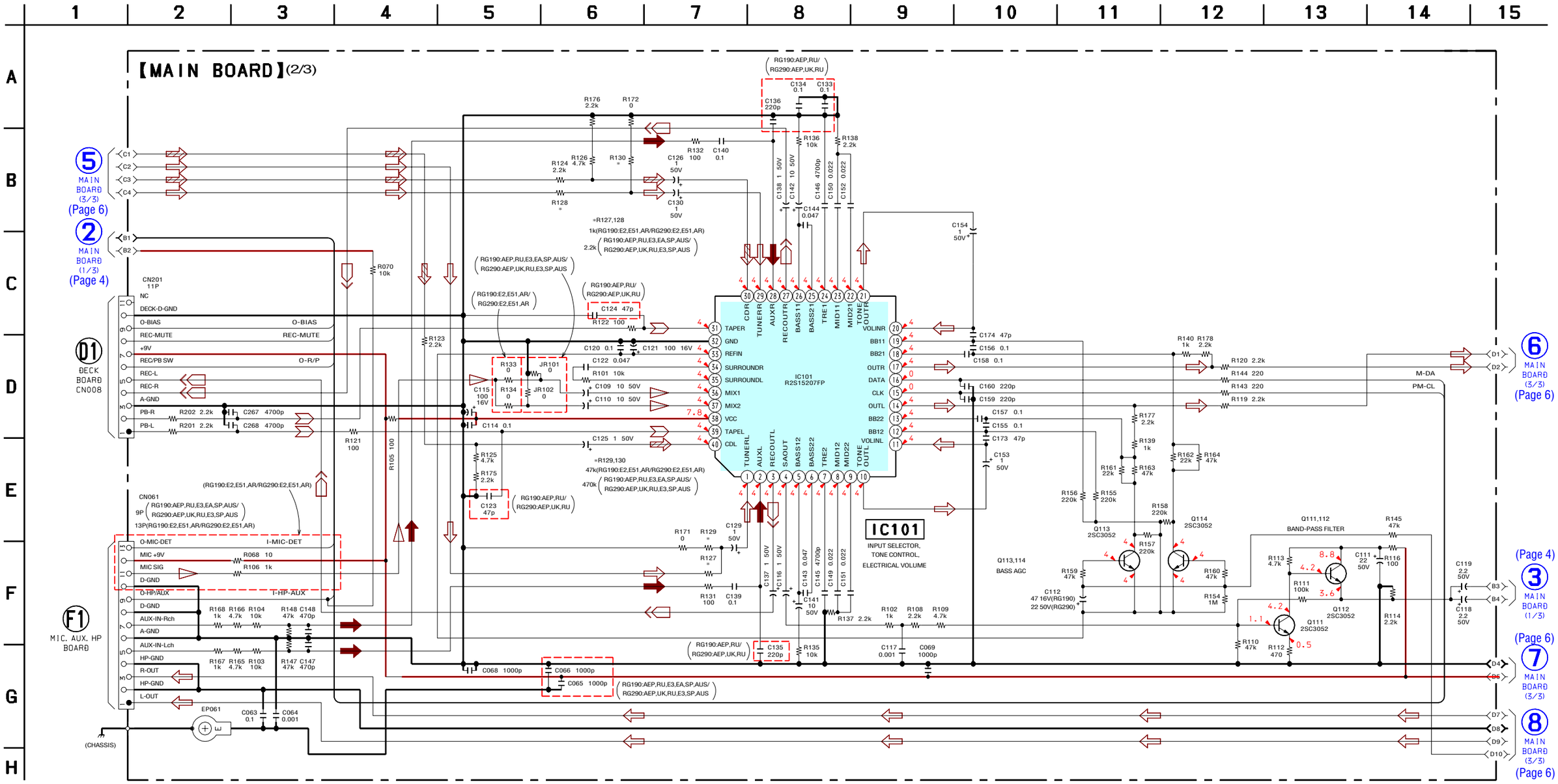

2-4. SCHEMATIC DIAGRAM – MAIN Board (3/3) (Except RG290: MX model) –

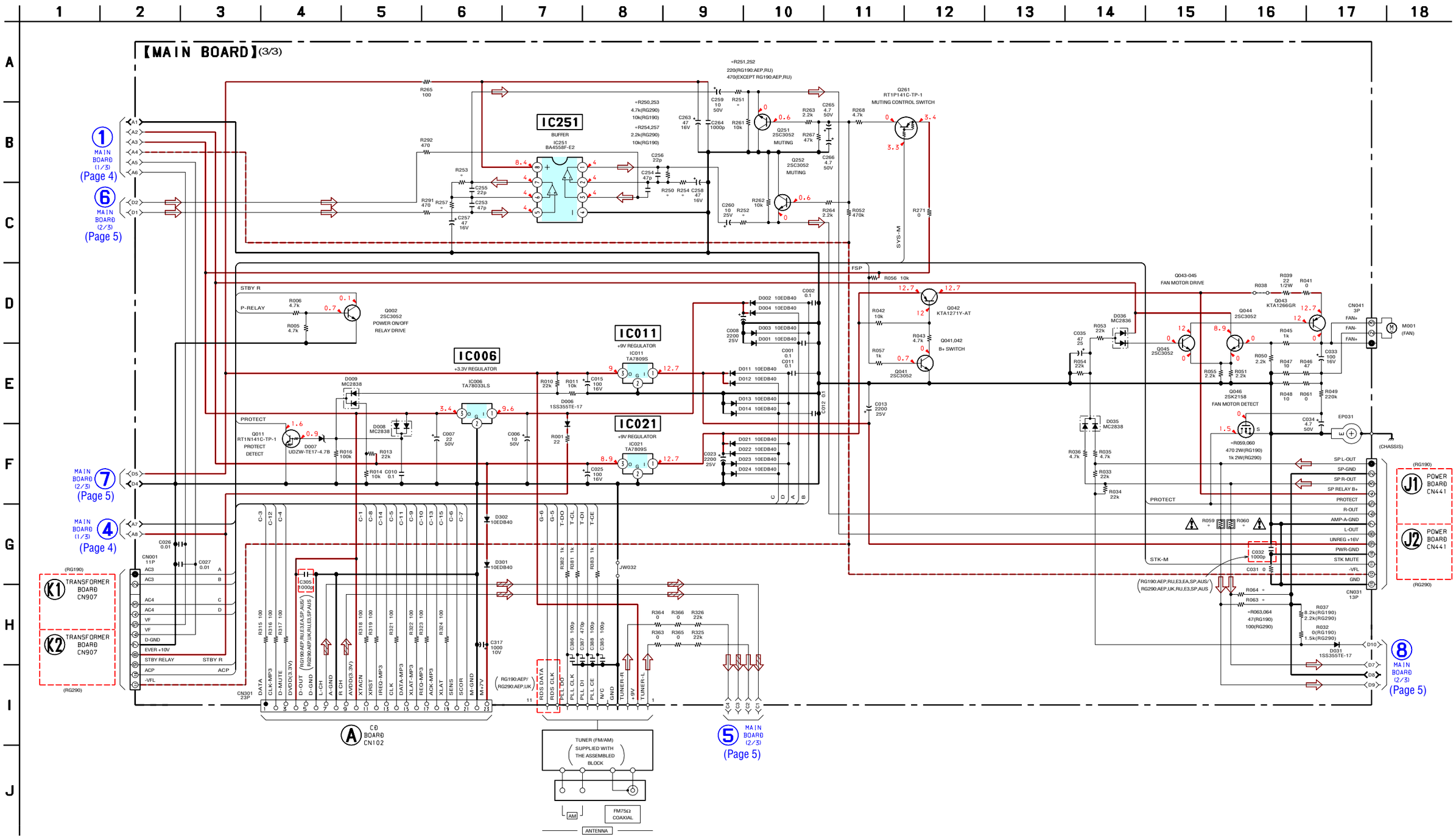

2-5. PRINTED WIRING BOARD – MAIN Board (RG290: MX model) – : Uses unleaded solder.

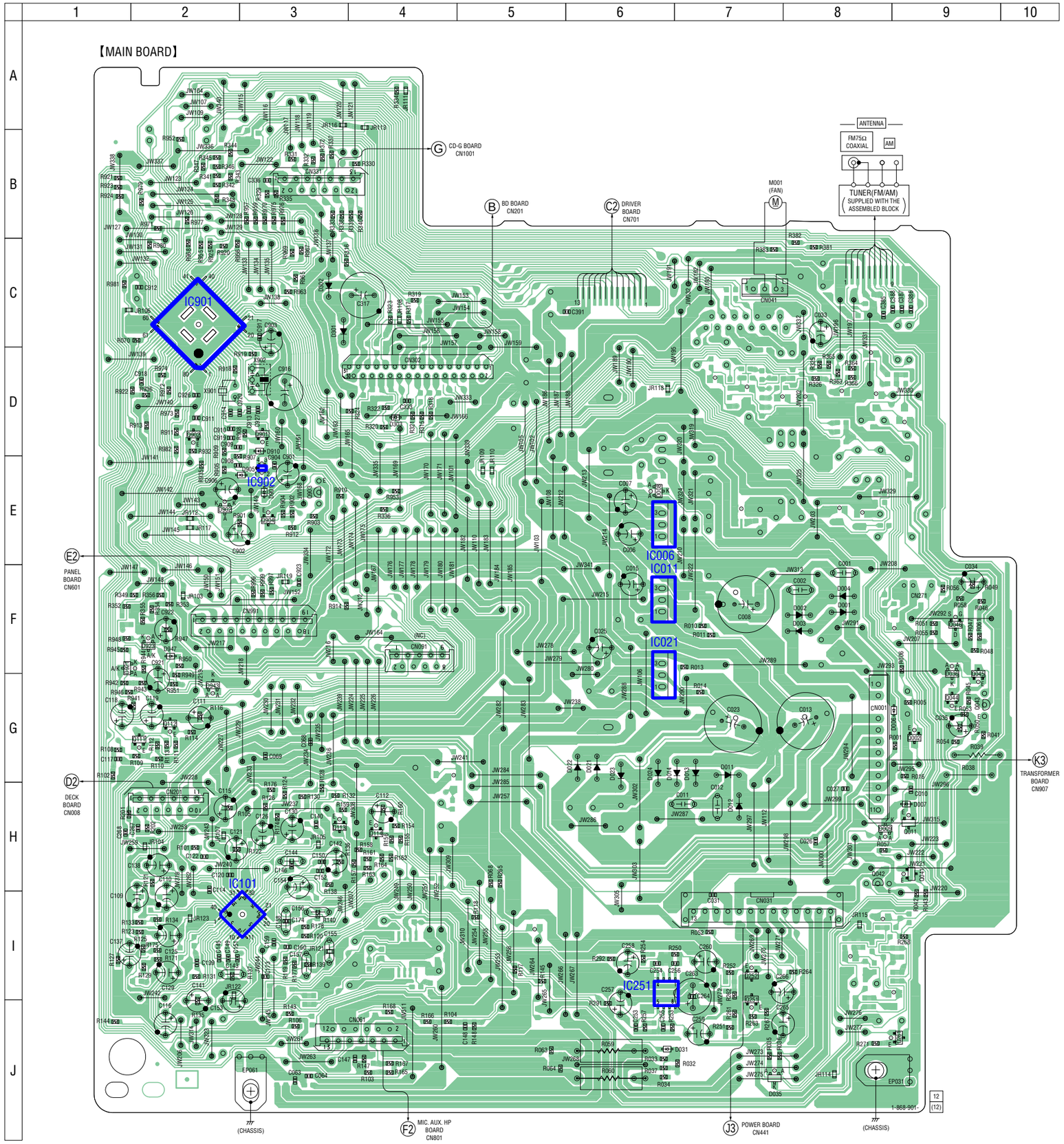

- **Semiconductor Location**

Ref. No.	Location
D001	F-8
D002	F-8
D003	F-8
D004	F-8
D006	G-9
D007	H-9
D008	E-6
D009	H-8
D011	G-7
D012	H-7
D013	G-7
D014	G-7
D021	G-6
D022	G-6
D023	G-6
D024	G-6
D031	J-6
D035	J-7
D036	G-9
D301	C-3
D302	C-3
D303	D-4
D901	E-3
D902	E-2
D905	E-3
D910	D-3
D921	F-1
D923	F-2
D943	G-2
D947	F-2
IC006	E-6
IC011	F-6
IC021	G-6
IC101	I-3
IC251	I-6
IC901	C-2
IC902	E-3
Q002	G-9
Q011	H-9
Q041	H-9
Q042	H-8
Q043	G-9
Q044	G-9
Q045	G-9
Q046	F-9
Q111	G-2
Q112	G-2
Q113	H-3
Q114	H-4
Q251	I-7
Q252	I-7
Q261	J-9
Q901	D-3
Q902	D-2
Q903	E-3
Q904	E-3

2-6. SCHEMATIC DIAGRAM – MAIN Board (1/3) (RG290: MX model) –

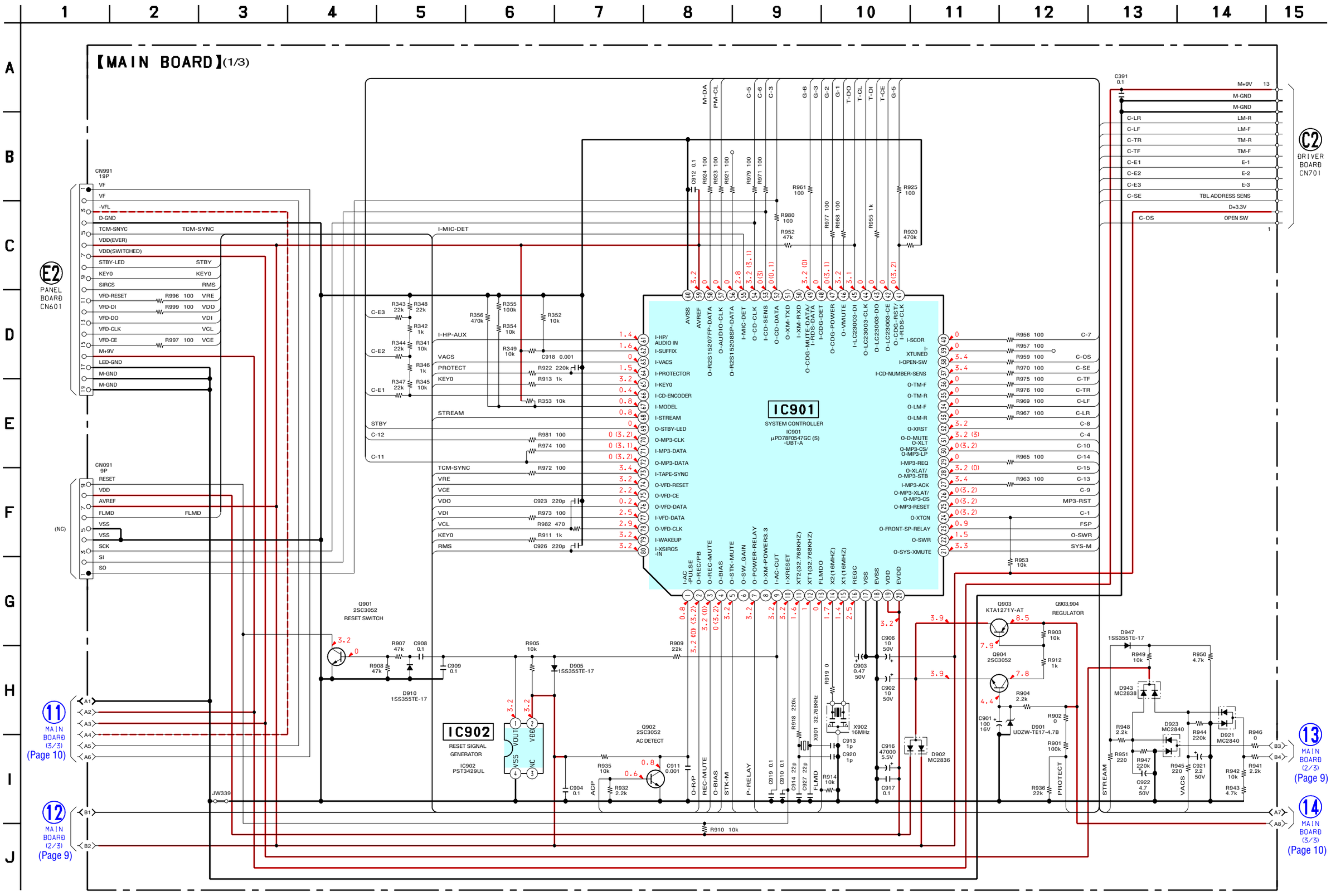

2-7. SCHEMATIC DIAGRAM – MAIN Board (2/3) (RG290: MX model) –

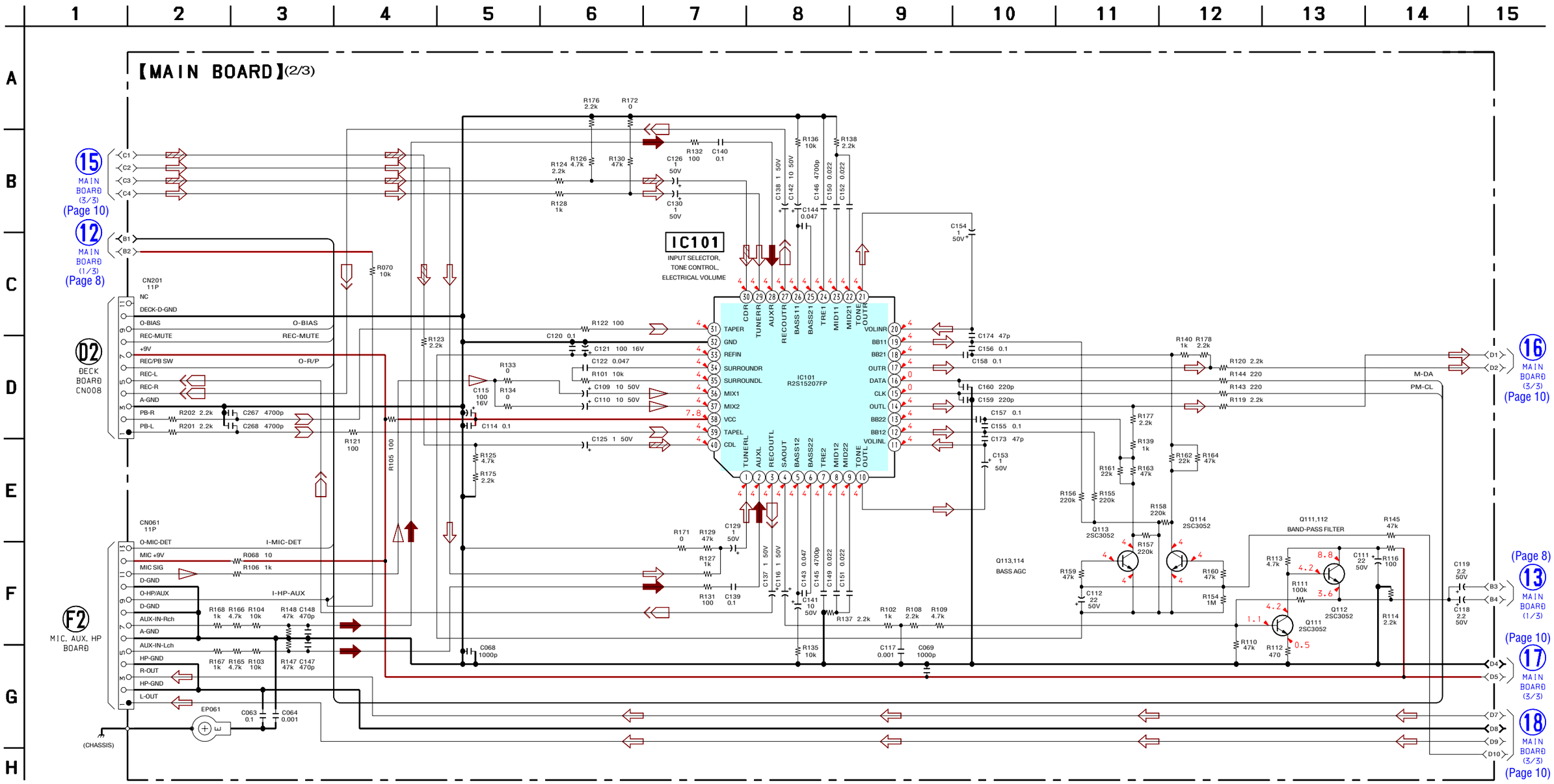

2-8. SCHEMATIC DIAGRAM – MAIN Board (3/3) (RG290: MX model) –

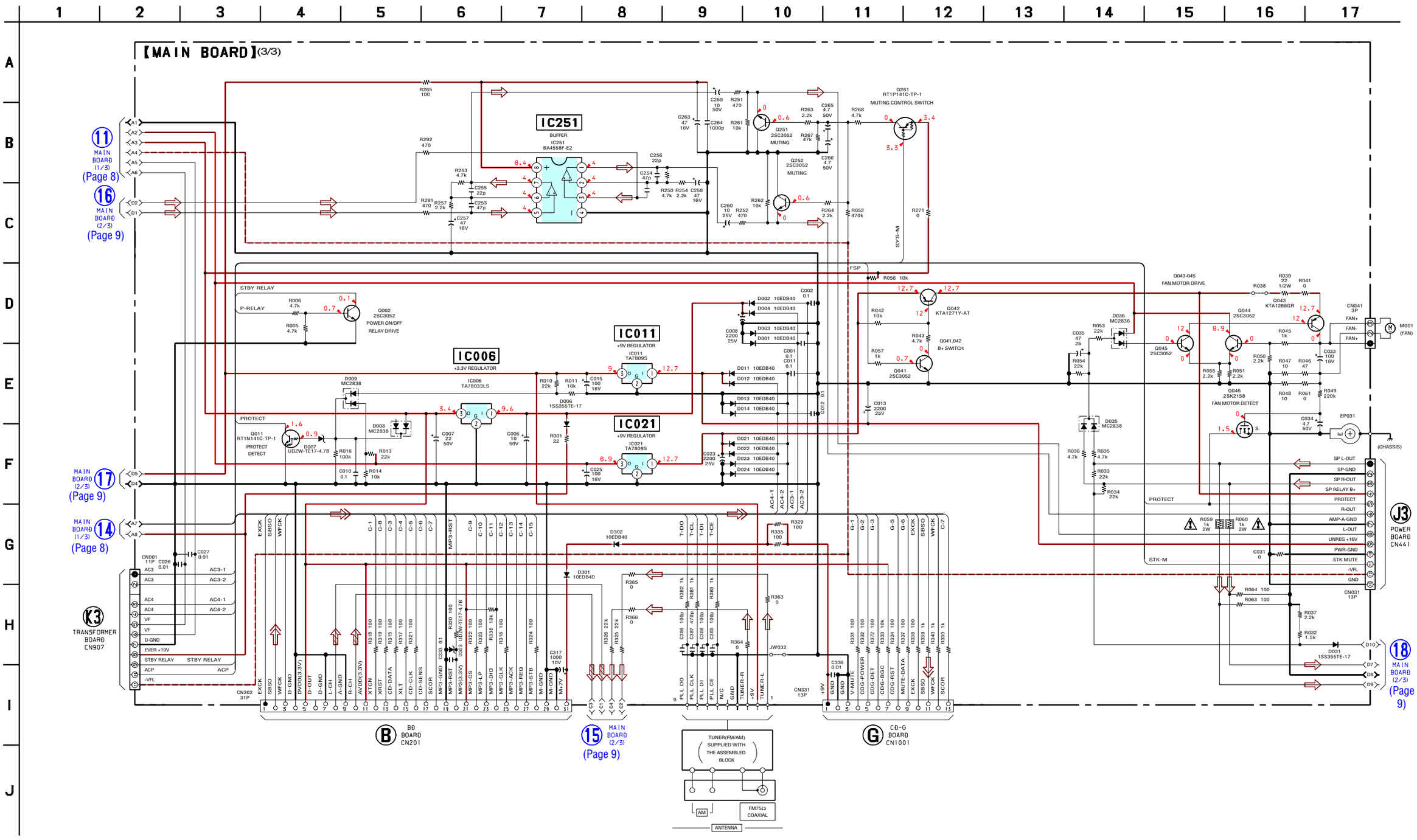

2-9. PRINTED WIRING BOARD – KEY RIGHT (Except RG290: MX model) Board –

: Uses unleaded solder.

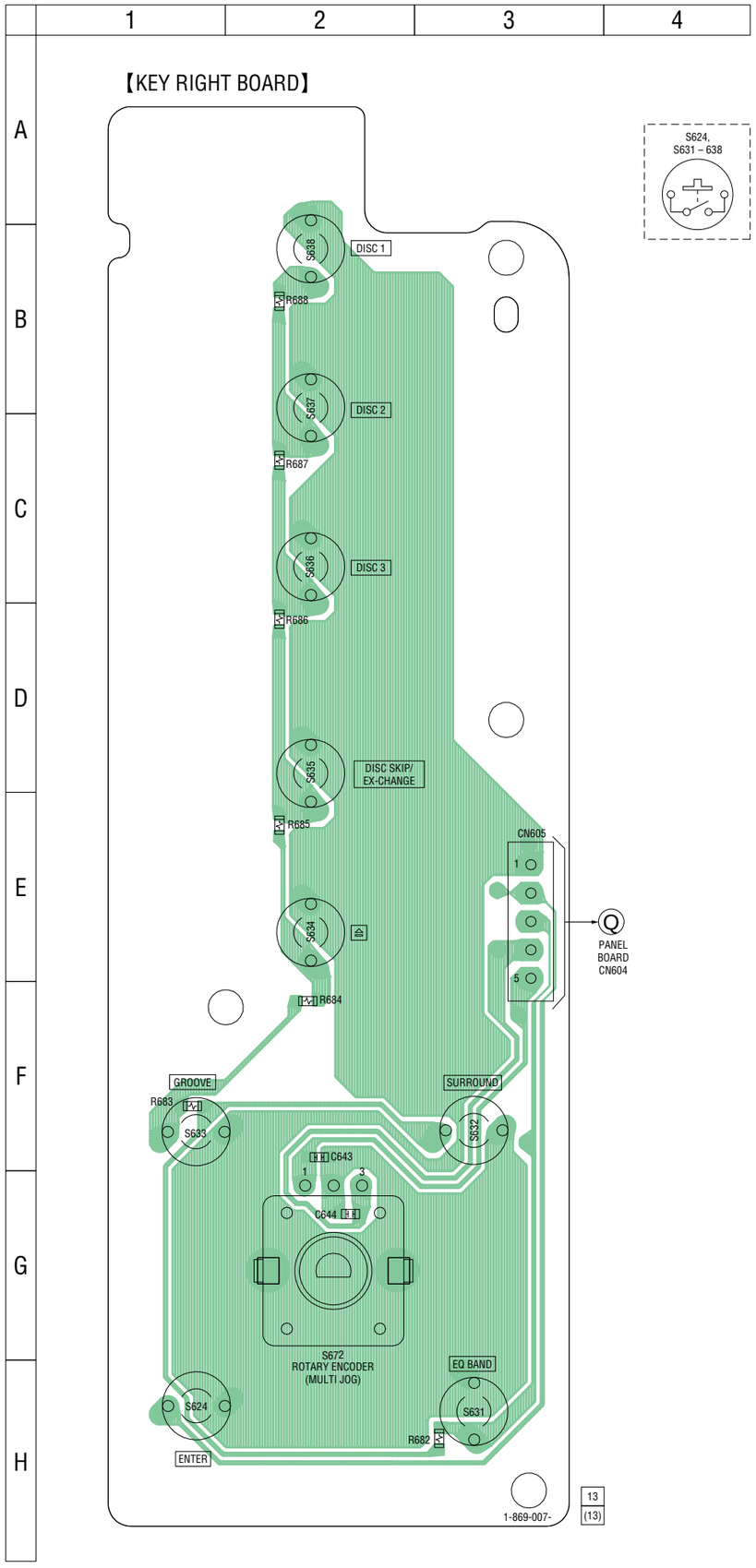

2-10. SCHEMATIC DIAGRAM – KEY RIGHT (Except RG290: MX model) Board –

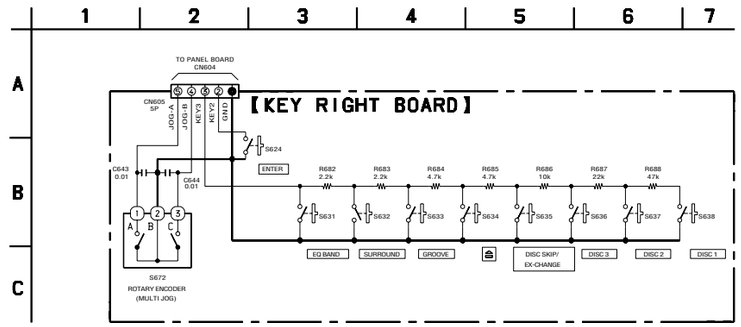

2-11. PRINTED WIRING BOARD – KEY RIGHT Board (RG290: MX model) –

: Uses unleaded solder.

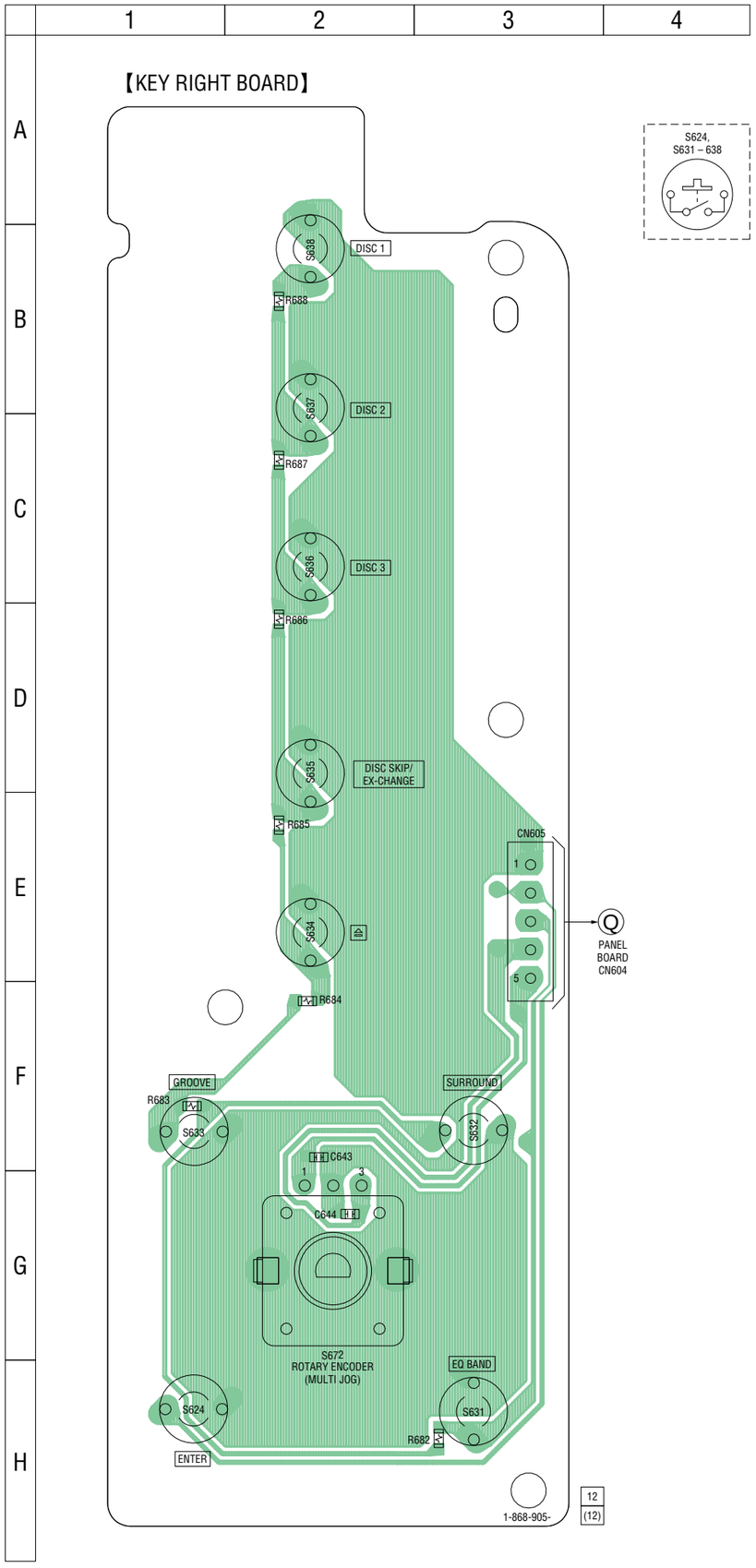

2-12. SCHEMATIC DIAGRAM – KEY RIGHT Board (RG290: MX model) –

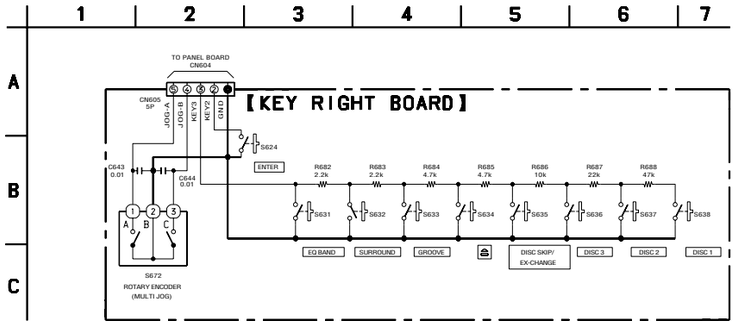

KEY RIGHT | MAIN

3. ELECTRICAL PARTS LIST

NOTE:

- Due to standardization, replacements in the parts list may be different from the parts specified in the diagrams or the components used on the set.
- -XX and -X mean standardized parts, so they may have some difference from the original one.
- RESISTORS
  All resistors are in ohms.
  METAL: Metal-film resistor.
  METAL OXIDE: Metal oxide-film resistor.
  F: nonflammable
- Abbreviation
  AUS : Australian model
  AR : Argentina model
  E2 : 120V AC area in E model
  E3 : 240V AC area in E model
  E51 : Chilean and Peruvian models
  EA : Saudi Arabia model
  MX : Mexican model
  RU : Russian model
  SP : Singapore model
- Items marked "*" are not stocked since they are seldom required for routine service. Some delay should be anticipated when ordering these items.
- SEMICONDUCTORS
  In each case, u: µ, for example:
  uA... : µA... uPA... : µPA...
  uPB... : µPB... uPC... : µPC...
  uPD... : µPD...
- CAPACITORS
  uF: µF
- COILS
  uH: µH

The components identified by mark ⚠ or dotted line with mark ⚠ are critical for safety.
Replace only with part number specified.

When indicating parts by reference number, please include the board.

Ref. No.	Part No.	Description			Remark
	A-1159-681-A	KEY RIGHT BOARD, COMPLETE (EXCEPT RG290: MX)			
	A-1159-682-A	KEY RIGHT BOARD, COMPLETE (RG290: MX)			
		**********			
		< CAPACITOR >			
C643	1-162-970-11	CERAMIC CHIP	0.01uF	10%	25V
C644	1-162-970-11	CERAMIC CHIP	0.01uF	10%	25V
		< RESISTOR >			
R682	1-216-825-11	METAL CHIP	2.2K	5%	1/10W
R683	1-216-825-11	METAL CHIP	2.2K	5%	1/10W
R684	1-216-829-11	METAL CHIP	4.7K	5%	1/10W
R685	1-216-829-11	METAL CHIP	4.7K	5%	1/10W
R686	1-216-833-11	METAL CHIP	10K	5%	1/10W
R687	1-216-837-11	METAL CHIP	22K	5%	1/10W
R688	1-216-841-11	METAL CHIP	47K	5%	1/10W
		< SWITCH >			
S624	1-762-875-21	SWITCH, KEYBOARD (ENTER)			
S631	1-762-875-21	SWITCH, KEYBOARD (EQ BAND)			
S632	1-762-875-21	SWITCH, KEYBOARD (SURRROUND)			
S633	1-762-875-21	SWITCH, KEYBOARD (GROOVE)			
S634	1-762-875-21	SWITCH, KEYBOARD (≙)			
S635	1-762-875-21	SWITCH, KEYBOARD (DISC SKIP/EX-CHANGE)			
S636	1-762-875-21	SWITCH, KEYBOARD (DISC 3)			
S637	1-762-875-21	SWITCH, KEYBOARD (DISC 2)			
S638	1-762-875-21	SWITCH, KEYBOARD (DISC 1)			
S672	1-786-418-11	SWITCH, ROTARY (ENCODER) (MULTI JOG)			
**********					
	A-1163-371-A	MAIN BOARD, COMPLETE (RG290: AEP, UK)			
	A-1163-372-A	MAIN BOARD, COMPLETE (RG290: RU)			
	A-1163-373-A	MAIN BOARD, COMPLETE(RG290: E3, SP, AUS)			
	A-1163-375-A	MAIN BOARD, COMPLETE(RG290: E2, E51, AR)			
	A-1163-376-A	MAIN BOARD, COMPLETE (RG290: MX)			
	A-1163-423-A	MAIN BOARD, COMPLETE (RG190: AEP)			
	A-1163-424-A	MAIN BOARD, COMPLETE (RG190: RU)			
	A-1163-425-A	MAIN BOARD, COMPLETE(RG190: E3, SP, AUS)			
	A-1163-426-A	MAIN BOARD, COMPLETE (RG190: EA)			
	A-1163-427-A	MAIN BOARD, COMPLETE(RG190: E2, E51, AR)			
		**********			
	7-685-872-01	SCREW +BVTT 3X8 (S)			

Ref. No.	Part No.	Description			Remark
		< CAPACITOR >			
C001	1-136-497-81	FILM	0.1uF	5%	50V
C002	1-136-497-81	FILM	0.1uF	5%	50V
C006	1-126-964-11	ELECT	10uF	20%	50V
C007	1-126-965-11	ELECT	22uF	20%	50V
C008	1-126-943-11	ELECT	2200uF	20%	25V
C010	1-165-621-11	CERAMIC CHIP	0.1uF		50V
C011	1-136-497-81	FILM	0.1uF	5%	50V
C012	1-136-497-81	FILM	0.1uF	5%	50V
C013	1-126-943-11	ELECT	2200uF	20%	25V
C015	1-126-933-11	ELECT	100uF	20%	16V
C023	1-126-943-11	ELECT	2200uF	20%	25V
C025	1-126-933-11	ELECT	100uF	20%	16V
C026	1-162-974-11	CERAMIC CHIP	0.01uF		50V
C027	1-162-974-11	CERAMIC CHIP	0.01uF		50V
C031	1-216-864-11	SHORT CHIP	0		
C032	1-162-964-11	CERAMIC CHIP	0.001uF	10%	50V (RG190: AEP, RU, E3, EA, SP, AUS/ RG290: AEP, UK, RU, E3, SP, AUS)
C033	1-126-933-11	ELECT	100uF	20%	16V
C034	1-126-963-11	ELECT	4.7uF	20%	50V
C035	1-126-947-11	ELECT	47uF	20%	35V
C063	1-164-156-11	CERAMIC CHIP	0.1uF		25V
C064	1-162-964-11	CERAMIC CHIP	0.001uF	10%	50V
C065	1-162-964-11	CERAMIC CHIP	0.001uF	10%	50V (RG190: AEP, RU, E3, EA, SP, AUS/ RG290: AEP, UK, RU, E3, SP, AUS)
C066	1-162-964-11	CERAMIC CHIP	0.001uF	10%	50V (RG190: AEP, RU, E3, EA, SP, AUS/ RG290: AEP, UK, RU, E3, SP, AUS)
C068	1-162-964-11	CERAMIC CHIP	0.001uF	10%	50V
C069	1-162-964-11	CERAMIC CHIP	0.001uF	10%	50V
C109	1-126-964-11	ELECT	10uF	20%	50V
C110	1-126-964-11	ELECT	10uF	20%	50V
C111	1-126-965-11	ELECT	22uF	20%	50V
C112	1-126-947-11	ELECT	47uF	20%	35V (RG190)
C112	1-126-965-11	ELECT	22uF	20%	50V (RG290)
C114	1-164-360-11	CERAMIC CHIP	0.1uF		16V
C115	1-126-933-11	ELECT	100uF	20%	16V
C116	1-126-960-11	ELECT	1uF	20%	50V
C117	1-162-964-11	CERAMIC CHIP	0.001uF	10%	50V
C118	1-126-961-11	ELECT	2.2uF	20%	50V

MAIN

Ref. No.	Part No.	Description			Remark
C119	1-126-961-11	ELECT	2.2uF	20%	50V
C120	1-164-360-11	CERAMIC CHIP	0.1uF		16V
C121	1-126-933-11	ELECT	100uF	20%	16V
C122	1-165-176-11	CERAMIC CHIP	0.047uF	10%	16V
C123	1-162-923-11	CERAMIC CHIP	47PF	5%	50V
		(RG190: AEP, RU/RG290: AEP, UK, RU)			
C124	1-162-923-11	CERAMIC CHIP	47PF	5%	50V
		(RG190: AEP, RU/RG290: AEP, UK, RU)			
C125	1-126-960-11	ELECT	1uF	20%	50V
C126	1-126-960-11	ELECT	1uF	20%	50V
C129	1-126-960-11	ELECT	1uF	20%	50V
C130	1-126-960-11	ELECT	1uF	20%	50V
C133	1-164-156-11	CERAMIC CHIP	0.1uF		25V
		(RG190: AEP, RU/RG290: AEP, UK, RU)			
C134	1-164-156-11	CERAMIC CHIP	0.1uF		25V
		(RG190: AEP, RU/RG290: AEP, UK, RU)			
C135	1-162-960-11	CERAMIC CHIP	220PF	10%	50V
		(RG190: AEP, RU/RG290: AEP, UK, RU)			
C136	1-162-960-11	CERAMIC CHIP	220PF	10%	50V
		(RG190: AEP, RU/RG290: AEP, UK, RU)			
C137	1-126-960-11	ELECT	1uF	20%	50V
C138	1-126-960-11	ELECT	1uF	20%	50V
C139	1-107-826-11	CERAMIC CHIP	0.1uF	10%	16V
C140	1-107-826-11	CERAMIC CHIP	0.1uF	10%	16V
C141	1-126-964-11	ELECT	10uF	20%	50V
C142	1-126-964-11	ELECT	10uF	20%	50V
C143	1-137-374-11	MYLAR	0.047uF	5%	50V
C144	1-137-374-11	MYLAR	0.047uF	5%	50V
C145	1-162-968-11	CERAMIC CHIP	0.0047uF	10%	50V
C146	1-162-968-11	CERAMIC CHIP	0.0047uF	10%	50V
C147	1-164-362-11	CERAMIC CHIP	470PF	5%	50V
C148	1-164-362-11	CERAMIC CHIP	470PF	5%	50V
C149	1-164-227-11	CERAMIC CHIP	0.022uF	10%	25V
C150	1-164-227-11	CERAMIC CHIP	0.022uF	10%	25V
C151	1-164-227-11	CERAMIC CHIP	0.022uF	10%	25V
C152	1-164-227-11	CERAMIC CHIP	0.022uF	10%	25V
C153	1-126-960-11	ELECT	1uF	20%	50V
C154	1-126-960-11	ELECT	1uF	20%	50V
C155	1-136-497-81	FILM	0.1uF	5%	50V
C156	1-136-497-81	FILM	0.1uF	5%	50V
C157	1-136-497-81	FILM	0.1uF	5%	50V
C158	1-136-497-81	FILM	0.1uF	5%	50V
C159	1-162-960-11	CERAMIC CHIP	220PF	10%	50V
C160	1-162-960-11	CERAMIC CHIP	220PF	10%	50V
C173	1-162-949-11	CERAMIC CHIP	47PF	5%	50V
C174	1-162-949-11	CERAMIC CHIP	47PF	5%	50V
C253	1-162-923-11	CERAMIC CHIP	47PF	5%	50V
C254	1-162-923-11	CERAMIC CHIP	47PF	5%	50V
C255	1-162-919-11	CERAMIC CHIP	22PF	5%	50V
C256	1-162-919-11	CERAMIC CHIP	22PF	5%	50V
C257	1-126-947-11	ELECT	47uF	20%	35V
C258	1-126-947-11	ELECT	47uF	20%	35V
C259	1-126-964-11	ELECT	10uF	20%	50V
C260	1-124-261-00	ELECT	10uF	20%	25V
C263	1-126-947-11	ELECT	47uF	20%	35V
C264	1-162-964-11	CERAMIC CHIP	0.001uF	10%	50V
C265	1-126-963-11	ELECT	4.7uF	20%	50V
C266	1-126-963-11	ELECT	4.7uF	20%	50V
C267	1-162-968-11	CERAMIC CHIP	0.0047uF	10%	50V
C268	1-162-968-11	CERAMIC CHIP	0.0047uF	10%	50V
C305	1-162-964-11	CERAMIC CHIP	0.001uF	10%	50V
		(RG190: AEP, RU, E3, EA, SP, AUS/ RG290: AEP, UK, RU, E3, SP, AUS)			
C317	1-126-926-11	ELECT	1000uF	20%	10V
C333	1-164-156-11	CERAMIC CHIP	0.1uF		25V
					(RG290: MX)
C336	1-162-970-11	CERAMIC CHIP	0.01uF	10%	25V
					(RG290: MX)
C385	1-162-927-11	CERAMIC CHIP	100PF	5%	50V
C386	1-162-927-11	CERAMIC CHIP	100PF	5%	50V
C387	1-162-962-11	CERAMIC CHIP	470PF	10%	50V
C388	1-162-927-11	CERAMIC CHIP	100PF	5%	50V
C391	1-164-156-11	CERAMIC CHIP	0.1uF		25V
C901	1-126-933-11	ELECT	100uF	20%	16V
C902	1-126-964-11	ELECT	10uF	20%	50V
C903	1-126-959-11	ELECT	0.47uF	20%	50V
C904	1-164-156-11	CERAMIC CHIP	0.1uF		25V
C906	1-126-964-11	ELECT	10uF	20%	50V
C908	1-164-156-11	CERAMIC CHIP	0.1uF		25V
C909	1-164-156-11	CERAMIC CHIP	0.1uF		25V
C910	1-164-156-11	CERAMIC CHIP	0.1uF		25V
C911	1-162-964-11	CERAMIC CHIP	0.001uF	10%	50V
C912	1-164-156-11	CERAMIC CHIP	0.1uF		25V
C913	1-162-905-11	CERAMIC CHIP	1PF	0.25PF	50V
C914	1-162-919-11	CERAMIC CHIP	22PF	5%	50V
C916	1-114-154-11	DOUBLE LAYER	47000uF		5.5V
C917	1-164-156-11	CERAMIC CHIP	0.1uF		25V
C918	1-162-964-11	CERAMIC CHIP	0.001uF	10%	50V
C919	1-164-156-11	CERAMIC CHIP	0.1uF		25V
C920	1-162-905-11	CERAMIC CHIP	1PF	0.25PF	50V
C921	1-126-961-11	ELECT	2.2uF	20%	50V
C922	1-126-963-11	ELECT	4.7uF	20%	50V
C923	1-162-960-11	CERAMIC CHIP	220PF	10%	50V
C924	1-162-927-11	CERAMIC CHIP	100PF	5%	50V
			(RG190: AEP/RG290: AEP, UK)		
C925	1-162-927-11	CERAMIC CHIP	100PF	5%	50V
			(RG190: AEP/RG290: AEP, UK)		
C926	1-162-960-11	CERAMIC CHIP	220PF	10%	50V
C927	1-162-919-11	CERAMIC CHIP	22PF	5%	50V
		< CONNECTOR >			
* CN031	1-573-094-11	SOCKET, CONNECTOR 13P			
CN041	1-819-131-11	PIN, CONNECTOR 3P			
CN061	1-568-828-11	CONNECTOR, FFC 9P (RG190: AEP, RU, E3, EA, SP, AUS/RG290: AEP, UK, RU, E3, SP, AUS)			
CN061	1-784-774-11	CONNECTOR, FFC 13P (RG190: E2, E51, AR/RG290: E2, E51, MX, AR)			
CN091	1-568-828-11	CONNECTOR FFC 9P			
CN201	1-568-830-11	CONNECTOR, FFC11P			
CN301	1-779-291-11	CONNECTOR, FFC (LIF (NON-ZIF)) 23P (EXCEPT RG290: MX)			
CN302	1-779-299-11	CONNECTOR, FFC (LIF (NON-ZIF)) 31P (RG290: MX)			
CN331	1-784-774-11	CONNECTOR, FFC 13P (RG290: MX)			
CN991	1-784-780-11	CONNECTOR, FFC 19P			

Ref. No.	Part No.	Description	Remark
		< DIODE >	
D001	6-500-522-21	DIODE 10EDB40-TB3	
D002	6-500-522-21	DIODE 10EDB40-TB3	
D003	6-500-522-21	DIODE 10EDB40-TB3	
D004	6-500-522-21	DIODE 10EDB40-TB3	
D006	8-719-988-61	DIODE 1SS355TE-17	
D007	6-501-166-01	DIODE UDZW-TE17-4.7B	
D008	8-719-000-08	DIODE MC2838	
D009	6-500-335-01	DIODE MC2838-T112-1	
D011	6-500-522-21	DIODE 10EDB40-TB3	
D012	6-500-522-21	DIODE 10EDB40-TB3	
D013	6-500-522-21	DIODE 10EDB40-TB3	
D014	6-500-522-21	DIODE 10EDB40-TB3	
D021	6-500-522-21	DIODE 10EDB40-TB3	
D022	6-500-522-21	DIODE 10EDB40-TB3	
D023	6-500-522-21	DIODE 10EDB40-TB3	
D024	6-500-522-21	DIODE 10EDB40-TB3	
D031	8-719-988-61	DIODE 1SS355TE-17	
D035	8-719-000-08	DIODE MC2838	
D036	8-719-000-07	DIODE MC2836	
D301	6-500-522-21	DIODE 10EDB40-TB3	
D302	6-500-522-21	DIODE 10EDB40-TB3	
D303	6-501-166-01	DIODE UDZW-TE17-4.7B (RG290: MX)	
D901	6-501-166-01	DIODE UDZW-TE17-4.7B	
D902	8-719-000-07	DIODE MC2836	
D905	8-719-988-61	DIODE 1SS355TE-17	
D910	8-719-988-61	DIODE 1SS355TE-17	
D921	6-500-848-01	DIODE MC2840-T112-1	
D923	6-500-848-01	DIODE MC2840-T112-1	
D943	8-719-000-08	DIODE MC2838	
D947	8-719-988-61	DIODE 1SS355TE-17	
		< IC >	
IC006	6-702-771-01	IC TA78033LS (EXCEPT RG290: MX)	
IC006	6-702-771-01	IC TA78033LS (RG290: MX)	
IC011	8-759-701-59	IC NJM78M09FA (EXCEPT RG290: MX)	
IC011	8-759-701-59	IC NJM78M09FA (RG290: MX)	
IC021	8-759-701-59	IC NJM78M09FA (EXCEPT RG290: MX)	
IC021	8-759-701-59	IC NJM78M09FA (RG290: MX)	
IC101	6-709-331-01	IC R2S15207FP (EXCEPT RG290: MX)	
IC101	6-709-331-01	IC R2S15207FP (RG290: MX)	
IC251	8-759-909-71	IC BA4558F (EXCEPT RG290: MX)	
IC251	8-759-909-71	IC BA4558F (RG290: MX)	
IC901	6-808-126-01	IC uPD78F0547GC-RGCDGA-UBT-A (for SERVICE)(RG290: MX)	
IC901	6-808-402-01	IC uPD78F0547GC-RGSTDA-UBT-A (for SERVICE) (EXCEPT RG290: MX)	
IC902	8-759-713-61	IC PST3429UL (EXCEPT RG290: MX)	
IC902	8-759-713-61	IC PST3429UL (RG290: MX)	
		< JUMPER RESISTOR >	
JR101	1-216-864-11	SHORT CHIP 0 (RG190: AEP, RU, E3, EA, SP, AUS/RG290: AEP, UK, RU, E3, SP, AUS)	
JR102	1-216-864-11	SHORT CHIP 0 (RG190: AEP, RU, E3, EA, SP, AUS/RG290: AEP, UK, RU, E3, SP, AUS)	
JR103	1-216-864-11	SHORT CHIP 0	
JR104	1-216-864-11	SHORT CHIP 0	
JR105	1-216-864-11	SHORT CHIP 0	
JR106	1-216-864-11	SHORT CHIP 0	
JR107	1-216-864-11	SHORT CHIP 0	
JR108	1-216-864-11	SHORT CHIP 0	
JR109	1-216-864-11	SHORT CHIP 0	
JR110	1-216-864-11	SHORT CHIP 0	
JR111	1-216-864-11	SHORT CHIP 0	
JR112	1-216-864-11	SHORT CHIP 0	
JR113	1-216-864-11	SHORT CHIP 0 (RG290: MX)	
JR114	1-216-864-11	SHORT CHIP 0	
JR115	1-216-864-11	SHORT CHIP 0	
JR116	1-216-864-11	SHORT CHIP 0 (RG290: MX)	
JR117	1-216-864-11	SHORT CHIP 0	
JR118	1-216-864-11	SHORT CHIP 0	
JR119	1-216-864-11	SHORT CHIP 0	
JR120	1-216-864-11	SHORT CHIP 0 (EXCEPT RG290: MX)	
JR121	1-216-864-11	SHORT CHIP 0	
JR122	1-216-864-11	SHORT CHIP 0	
JR123	1-216-864-11	SHORT CHIP 0	
		< TRANSISTOR >	
Q002	8-729-120-28	TRANSISTOR 2SC1623-L5L6	
Q011	8-729-027-43	TRANSISTOR DTC114EKA-T146	
Q041	8-729-120-28	TRANSISTOR 2SC1623-L5L6	
Q042	8-729-037-13	TRANSISTOR KTA1271Y	
Q043	8-729-037-03	TRANSISTOR KTA1266GR-AT	
Q044	8-729-120-28	TRANSISTOR 2SC1623-L5L6	
Q045	8-729-120-28	TRANSISTOR 2SC1623-L5L6	
Q046	8-729-045-62	FET 2SK2158-T2B	
Q111	8-729-120-28	TRANSISTOR 2SC1623-L5L6	
Q112	8-729-120-28	TRANSISTOR 2SC1623-L5L6	
Q113	8-729-120-28	TRANSISTOR 2SC1623-L5L6	
Q114	8-729-120-28	TRANSISTOR 2SC1623-L5L6	
Q251	8-729-120-28	TRANSISTOR 2SC1623-L5L6	
Q252	8-729-120-28	TRANSISTOR 2SC1623-L5L6	
Q261	8-729-027-23	TRANSISTOR DTA114EKA-T146	
Q901	8-729-120-28	TRANSISTOR 2SC1623-L5L6	
Q902	8-729-120-28	TRANSISTOR 2SC1623-L5L6	
Q903	8-729-037-13	TRANSISTOR KTA1271Y	
Q904	8-729-120-28	TRANSISTOR 2SC1623-L5L6	
		< RESISTOR >	
R001	1-216-801-11	METAL CHIP 22 5% 1/10W	
R005	1-216-829-11	METAL CHIP 4.7K 5% 1/10W	
R006	1-216-829-11	METAL CHIP 4.7K 5% 1/10W	
R010	1-216-837-11	METAL CHIP 22K 5% 1/10W	
R011	1-216-833-11	METAL CHIP 10K 5% 1/10W	
R013	1-216-837-11	METAL CHIP 22K 5% 1/10W	
R014	1-216-833-11	METAL CHIP 10K 5% 1/10W	
R016	1-216-845-11	METAL CHIP 100K 5% 1/10W	
R032	1-216-823-11	METAL CHIP 1.5K 5% 1/10W	(RG290)
R032	1-216-864-11	SHORT CHIP 0	(RG190)
R033	1-216-837-11	METAL CHIP 22K 5% 1/10W	
R034	1-216-837-11	METAL CHIP 22K 5% 1/10W	
R035	1-216-829-11	METAL CHIP 4.7K 5% 1/10W	
R036	1-216-829-11	METAL CHIP 4.7K 5% 1/10W	

MAIN

Ref. No.	Part No.	Description			Remark
R037	1-216-825-11	METAL CHIP	2.2K	5%	1/10W (RG290)
R037	1-216-832-11	METAL CHIP	8.2K	5%	1/10W (RG190)
R039	1-260-308-11	CARBON	22	5%	1/2W
R041	1-216-864-11	SHORT CHIP	0		
R042	1-216-833-11	METAL CHIP	10K	5%	1/10W
R043	1-216-829-11	METAL CHIP	4.7K	5%	1/10W
R045	1-216-821-11	METAL CHIP	1K	5%	1/10W
R046	1-216-805-11	METAL CHIP	47	5%	1/10W
R047	1-216-797-11	METAL CHIP	10	5%	1/10W
R048	1-216-797-11	METAL CHIP	10	5%	1/10W
R049	1-216-849-11	METAL CHIP	220K	5%	1/10W
R050	1-216-825-11	METAL CHIP	2.2K	5%	1/10W
R051	1-216-825-11	METAL CHIP	2.2K	5%	1/10W
R052	1-216-853-11	METAL CHIP	470K	5%	1/10W
R053	1-216-837-11	METAL CHIP	22K	5%	1/10W
R054	1-216-837-11	METAL CHIP	22K	5%	1/10W
R055	1-216-825-11	METAL CHIP	2.2K	5%	1/10W
R056	1-216-833-11	METAL CHIP	10K	5%	1/10W
R057	1-216-821-11	METAL CHIP	1K	5%	1/10W
⚠R059	1-215-890-11	METAL OXIDE	470	5%	2W F (RG190)
⚠R059	1-215-892-11	METAL OXIDE	1K	5%	2W F (RG290)
⚠R060	1-215-890-11	METAL OXIDE	470	5%	2W F (RG190)
⚠R060	1-215-892-11	METAL OXIDE	1K	5%	2W F (RG290)
R061	1-216-864-11	SHORT CHIP	0		
R063	1-216-805-11	METAL CHIP	47	5%	1/10W (RG190)
R063	1-216-809-11	METAL CHIP	100	5%	1/10W (RG290)
R064	1-216-805-11	METAL CHIP	47	5%	1/10W (RG190)
R064	1-216-809-11	METAL CHIP	100	5%	1/10W (RG290)
R068	1-216-797-11	METAL CHIP	10	5%	1/10W (RG190: E2, E51, AR/RG290: E2, E51, MX, AR)
R070	1-216-833-11	METAL CHIP	10K	5%	1/10W
R101	1-216-833-11	METAL CHIP	10K	5%	1/10W
R102	1-216-821-11	METAL CHIP	1K	5%	1/10W
R103	1-216-833-11	METAL CHIP	10K	5%	1/10W
R104	1-216-833-11	METAL CHIP	10K	5%	1/10W
R105	1-216-809-11	METAL CHIP	100	5%	1/10W
R106	1-216-821-11	METAL CHIP	1K	5%	1/10W (RG190: E2, E51, AR/RG290: E2, E51, MX, AR)
R108	1-216-825-11	METAL CHIP	2.2K	5%	1/10W
R109	1-216-829-11	METAL CHIP	4.7K	5%	1/10W
R110	1-216-841-11	METAL CHIP	47K	5%	1/10W
R111	1-216-845-11	METAL CHIP	100K	5%	1/10W
R112	1-216-817-11	METAL CHIP	470	5%	1/10W
R113	1-216-829-11	METAL CHIP	4.7K	5%	1/10W
R114	1-216-825-11	METAL CHIP	2.2K	5%	1/10W
R116	1-216-809-11	METAL CHIP	100	5%	1/10W
R119	1-216-825-11	METAL CHIP	2.2K	5%	1/10W
R120	1-216-825-11	METAL CHIP	2.2K	5%	1/10W
R121	1-216-809-11	METAL CHIP	100	5%	1/10W
R122	1-216-809-11	METAL CHIP	100	5%	1/10W
R123	1-216-825-11	METAL CHIP	2.2K	5%	1/10W
R124	1-216-825-11	METAL CHIP	2.2K	5%	1/10W
R125	1-216-829-11	METAL CHIP	4.7K	5%	1/10W
R126	1-216-829-11	METAL CHIP	4.7K	5%	1/10W
R127	1-216-821-11	METAL CHIP	1K	5%	1/10W (RG190: E2, E51, AR/RG290: E2, E51, MX, AR)
R127	1-216-825-11	METAL CHIP	2.2K	5%	1/10W (RG190: AEP, RU, E3, EA, SP, AUS/ RG290: AEP, UK, RU, E3, SP, AUS)
R128	1-216-821-11	METAL CHIP	1K	5%	1/10W (RG190: E2, E51, AR/RG290: E2, E51, MX, AR)
R128	1-216-825-11	METAL CHIP	2.2K	5%	1/10W (RG190: AEP, RU, E3, EA, SP, AUS/ RG290: AEP, UK, RU, E3, SP, AUS)
R129	1-216-841-11	METAL CHIP	47K	5%	1/10W (RG190: E2, E51, AR/RG290: E2, E51, MX, AR)
R129	1-216-853-11	METAL CHIP	470K	5%	1/10W (RG190: AEP, RU, E3, EA, SP, AUS/ RG290: AEP, UK, RU, E3, SP, AUS)
R130	1-216-841-11	METAL CHIP	47K	5%	1/10W (RG190: E2, E51, AR/RG290: E2, E51, MX, AR)
R130	1-216-853-11	METAL CHIP	470K	5%	1/10W (RG190: AEP, RU, E3, EA, SP, AUS/ RG290: AEP, UK, RU, E3, SP, AUS)
R131	1-216-809-11	METAL CHIP	100	5%	1/10W
R132	1-216-809-11	METAL CHIP	100	5%	1/10W
R133	1-216-864-11	SHORT CHIP	0		(RG190: E2, E51, AR/RG290: E2, E51, MX, AR)
R134	1-216-864-11	SHORT CHIP	0		(RG190: E2, E51, AR/RG290: E2, E51, MX, AR)
R135	1-216-833-11	METAL CHIP	10K	5%	1/10W
R136	1-216-833-11	METAL CHIP	10K	5%	1/10W
R137	1-216-825-11	METAL CHIP	2.2K	5%	1/10W
R138	1-216-825-11	METAL CHIP	2.2K	5%	1/10W
R139	1-216-821-11	METAL CHIP	1K	5%	1/10W
R140	1-216-821-11	METAL CHIP	1K	5%	1/10W
R143	1-216-813-11	METAL CHIP	220	5%	1/10W
R144	1-216-813-11	METAL CHIP	220	5%	1/10W
R145	1-216-841-11	METAL CHIP	47K	5%	1/10W
R147	1-216-841-11	METAL CHIP	47K	5%	1/10W
R148	1-216-841-11	METAL CHIP	47K	5%	1/10W
R154	1-216-857-11	METAL CHIP	1M	5%	1/10W
R155	1-216-849-11	METAL CHIP	220K	5%	1/10W
R156	1-216-849-11	METAL CHIP	220K	5%	1/10W
R157	1-216-849-11	METAL CHIP	220K	5%	1/10W
R158	1-216-849-11	METAL CHIP	220K	5%	1/10W
R159	1-216-841-11	METAL CHIP	47K	5%	1/10W
R160	1-216-841-11	METAL CHIP	47K	5%	1/10W
R161	1-216-837-11	METAL CHIP	22K	5%	1/10W
R162	1-216-837-11	METAL CHIP	22K	5%	1/10W
R163	1-216-841-11	METAL CHIP	47K	5%	1/10W
R164	1-216-841-11	METAL CHIP	47K	5%	1/10W
R165	1-216-829-11	METAL CHIP	4.7K	5%	1/10W
R166	1-216-829-11	METAL CHIP	4.7K	5%	1/10W
R167	1-216-821-11	METAL CHIP	1K	5%	1/10W
R168	1-216-821-11	METAL CHIP	1K	5%	1/10W
R171	1-216-864-11	SHORT CHIP	0		
R172	1-216-864-11	SHORT CHIP	0		
R175	1-216-825-11	METAL CHIP	2.2K	5%	1/10W

MAIN

Ref. No.	Part No.	Description			Remark
R176	1-216-825-11	METAL CHIP	2.2K	5%	1/10W
R177	1-216-825-11	METAL CHIP	2.2K	5%	1/10W
R178	1-216-825-11	METAL CHIP	2.2K	5%	1/10W
R201	1-216-825-11	METAL CHIP	2.2K	5%	1/10W
R202	1-216-825-11	METAL CHIP	2.2K	5%	1/10W
R250	1-216-829-11	METAL CHIP	4.7K	5%	1/10W (RG290)
R250	1-216-833-11	METAL CHIP	10K	5%	1/10W (RG190)
R251	1-216-813-11	METAL CHIP	220	5%	1/10W (RG190: AEP, RU)
R251	1-216-817-11	METAL CHIP	470	5%	1/10W (EXCEPT RG190: AEP, RU)
R252	1-216-813-11	METAL CHIP	220	5%	1/10W (RG190: AEP, RU)
R252	1-216-817-11	METAL CHIP	470	5%	1/10W (EXCEPT RG190: AEP, RU)
R253	1-216-829-11	METAL CHIP	4.7K	5%	1/10W (RG290)
R253	1-216-833-11	METAL CHIP	10K	5%	1/10W (RG190)
R254	1-216-825-11	METAL CHIP	2.2K	5%	1/10W (RG290)
R254	1-216-833-11	METAL CHIP	10K	5%	1/10W (RG190)
R257	1-216-825-11	METAL CHIP	2.2K	5%	1/10W (RG290)
R257	1-216-833-11	METAL CHIP	10K	5%	1/10W (RG190)
R261	1-216-833-11	METAL CHIP	10K	5%	1/10W
R262	1-216-833-11	METAL CHIP	10K	5%	1/10W
R263	1-216-825-11	METAL CHIP	2.2K	5%	1/10W
R264	1-216-825-11	METAL CHIP	2.2K	5%	1/10W
R265	1-216-809-11	METAL CHIP	100	5%	1/10W
R267	1-216-841-11	METAL CHIP	47K	5%	1/10W
R268	1-216-829-11	METAL CHIP	4.7K	5%	1/10W
R271	1-216-864-11	SHORT CHIP	0		
R291	1-216-817-11	METAL CHIP	470	5%	1/10W
R292	1-216-817-11	METAL CHIP	470	5%	1/10W
R315	1-216-809-11	METAL CHIP	100	5%	1/10W
R316	1-216-809-11	METAL CHIP	100	5%	1/10W
R317	1-216-809-11	METAL CHIP	100	5%	1/10W
R318	1-216-809-11	METAL CHIP	100	5%	1/10W
R319	1-216-809-11	METAL CHIP	100	5%	1/10W
R320	1-216-809-11	METAL CHIP	100	5%	1/10W (RG290: MX)
R321	1-216-809-11	METAL CHIP	100	5%	1/10W
R322	1-216-809-11	METAL CHIP	100	5%	1/10W
R323	1-216-809-11	METAL CHIP	100	5%	1/10W
R324	1-216-809-11	METAL CHIP	100	5%	1/10W
R325	1-216-837-11	METAL CHIP	22K	5%	1/10W
R326	1-216-837-11	METAL CHIP	22K	5%	1/10W
R329	1-216-809-11	METAL CHIP	100	5%	1/10W (RG290: MX)
R330	1-216-821-11	METAL CHIP	1K	5%	1/10W (RG290: MX)
R331	1-216-809-11	METAL CHIP	100	5%	1/10W (RG290: MX)
R332	1-216-809-11	METAL CHIP	100	5%	1/10W (RG290: MX)
R333	1-216-833-11	METAL CHIP	10K	5%	1/10W (RG290: MX)
R334	1-216-809-11	METAL CHIP	100	5%	1/10W (RG290: MX)
R335	1-216-809-11	METAL CHIP	100	5%	1/10W (RG290: MX)
R336	1-216-833-11	METAL CHIP	10K	5%	1/10W (RG290: MX)
R337	1-216-809-11	METAL CHIP	100	5%	1/10W (RG290: MX)
R338	1-216-809-11	METAL CHIP	100	5%	1/10W (RG290: MX)
R339	1-216-821-11	METAL CHIP	1K	5%	1/10W (RG290: MX)
R340	1-216-821-11	METAL CHIP	1K	5%	1/10W (RG290: MX)
R341	1-216-833-11	METAL CHIP	10K	5%	1/10W
R342	1-216-821-11	METAL CHIP	1K	5%	1/10W
R343	1-216-837-11	METAL CHIP	22K	5%	1/10W
R344	1-216-837-11	METAL CHIP	22K	5%	1/10W
R345	1-216-833-11	METAL CHIP	10K	5%	1/10W
R346	1-216-821-11	METAL CHIP	1K	5%	1/10W
R347	1-216-837-11	METAL CHIP	22K	5%	1/10W
R348	1-216-837-11	METAL CHIP	22K	5%	1/10W
R349	1-216-833-11	METAL CHIP	10K	5%	1/10W
R350	1-216-821-11	METAL CHIP	1K	5%	1/10W (RG190: RU/RG290: RU)
R350	1-216-833-11	METAL CHIP	10K	5%	1/10W (RG190: E2, E51, EA, AR/RG290: E2, E51, AR)
R351	1-216-825-11	METAL CHIP	2.2K	5%	1/10W (RG190: RU/RG290: RU)
R351	1-216-833-11	METAL CHIP	10K	5%	1/10W (RG190: E2, E51, AR/RG290: E2, E51, AR)
R351	1-216-845-11	METAL CHIP	100K	5%	1/10W (RG190: EA)
R352	1-216-821-11	METAL CHIP	1K	5%	1/10W (R190: AEP/RG290: AEP, UK)
R352	1-216-833-11	METAL CHIP	10K	5%	1/10W (RG290: MX)
R352	1-216-853-11	METAL CHIP	470K	5%	1/10W (RG190: EA)
R353	1-216-833-11	METAL CHIP	10K	5%	1/10W
R354	1-216-833-11	METAL CHIP	10K	5%	1/10W (RG290)
R355	1-216-845-11	METAL CHIP	100K	5%	1/10W (RG290)
R356	1-216-853-11	METAL CHIP	470K	5%	1/10W (RG290)
R363	1-216-864-11	SHORT CHIP	0		
R364	1-216-864-11	SHORT CHIP	0		
R365	1-216-864-11	SHORT CHIP	0		
R366	1-216-864-11	SHORT CHIP	0		
R372	1-216-809-11	METAL CHIP	100	5%	1/10W (RG290: MX)
R381	1-216-821-11	METAL CHIP	1K	5%	1/10W
R382	1-216-821-11	METAL CHIP	1K	5%	1/10W
R383	1-216-821-11	METAL CHIP	1K	5%	1/10W
R901	1-216-845-11	METAL CHIP	100K	5%	1/10W
R902	1-216-864-11	SHORT CHIP	0		
R903	1-216-833-11	METAL CHIP	10K	5%	1/10W

MAIN

Ref. No.	Part No.	Description			Remark
R904	1-216-825-11	METAL CHIP	2.2K	5%	1/10W
R905	1-216-833-11	METAL CHIP	10K	5%	1/10W
R907	1-216-841-11	METAL CHIP	47K	5%	1/10W
R908	1-216-841-11	METAL CHIP	47K	5%	1/10W
R909	1-216-837-11	METAL CHIP	22K	5%	1/10W
R910	1-216-833-11	METAL CHIP	10K	5%	1/10W
R911	1-216-821-11	METAL CHIP	1K	5%	1/10W
R912	1-216-821-11	METAL CHIP	1K	5%	1/10W
R913	1-216-821-11	METAL CHIP	1K	5%	1/10W
R914	1-216-833-11	METAL CHIP	10K	5%	1/10W
R918	1-216-849-11	METAL CHIP	220K	5%	1/10W
R919	1-216-864-11	SHORT CHIP	0		
R920	1-216-853-11	METAL CHIP	470K	5%	1/10W
R921	1-216-809-11	METAL CHIP	100	5%	1/10W
R922	1-216-849-11	METAL CHIP	220K	5%	1/10W
R923	1-216-809-11	METAL CHIP	100	5%	1/10W
R924	1-216-809-11	METAL CHIP	100	5%	1/10W
R925	1-216-809-11	METAL CHIP	100	5%	1/10W (RG290: MX)
R925	1-216-821-11	METAL CHIP	1K	5%	1/10W (RG190: AEP/G290: AEP, UK)
R932	1-216-825-11	METAL CHIP	2.2K	5%	1/10W
R935	1-216-833-11	METAL CHIP	10K	5%	1/10W
R936	1-216-837-11	METAL CHIP	22K	5%	1/10W
R941	1-216-825-11	METAL CHIP	2.2K	5%	1/10W
R942	1-216-833-11	METAL CHIP	10K	5%	1/10W
R943	1-216-829-11	METAL CHIP	4.7K	5%	1/10W
R944	1-216-849-11	METAL CHIP	220K	5%	1/10W
R945	1-216-813-11	METAL CHIP	220	5%	1/10W
R946	1-216-864-11	SHORT CHIP	0		
R947	1-216-849-11	METAL CHIP	220K	5%	1/10W
R948	1-216-825-11	METAL CHIP	2.2K	5%	1/10W
R949	1-216-833-11	METAL CHIP	10K	5%	1/10W
R950	1-216-829-11	METAL CHIP	4.7K	5%	1/10W
R951	1-216-813-11	METAL CHIP	220	5%	1/10W
R952	1-216-841-11	METAL CHIP	47K	5%	1/10W
R953	1-216-833-11	METAL CHIP	10K	5%	1/10W
R955	1-216-821-11	METAL CHIP	1K	5%	1/10W
R956	1-216-809-11	METAL CHIP	100	5%	1/10W
R957	1-216-809-11	METAL CHIP	100	5%	1/10W
R959	1-216-809-11	METAL CHIP	100	5%	1/10W
R961	1-216-809-11	METAL CHIP	100	5%	1/10W (RG290: MX)
R961	1-216-821-11	METAL CHIP	1K	5%	1/10W (RG190: AEP/G290: AEP, UK)
R963	1-216-809-11	METAL CHIP	100	5%	1/10W
R965	1-216-809-11	METAL CHIP	100	5%	1/10W
R967	1-216-809-11	METAL CHIP	100	5%	1/10W
R968	1-216-809-11	METAL CHIP	100	5%	1/10W (RG290: MX)
R969	1-216-809-11	METAL CHIP	100	5%	1/10W
R970	1-216-809-11	METAL CHIP	100	5%	1/10W
R971	1-216-809-11	METAL CHIP	100	5%	1/10W
R972	1-216-809-11	METAL CHIP	100	5%	1/10W
R973	1-216-809-11	METAL CHIP	100	5%	1/10W
R974	1-216-809-11	METAL CHIP	100	5%	1/10W
R975	1-216-809-11	METAL CHIP	100	5%	1/10W
R976	1-216-809-11	METAL CHIP	100	5%	1/10W
R977	1-216-809-11	METAL CHIP	100	5%	1/10W (RG290: MX)
R979	1-216-809-11	METAL CHIP	100	5%	1/10W
R980	1-216-809-11	METAL CHIP	100	5%	1/10W
R981	1-216-809-11	METAL CHIP	100	5%	1/10W
R982	1-216-817-11	METAL CHIP	470	5%	1/10W
R996	1-216-809-11	METAL CHIP	100	5%	1/10W
R997	1-216-809-11	METAL CHIP	100	5%	1/10W
R999	1-216-809-11	METAL CHIP	100	5%	1/10W
		< VIBRATOR >			
X901	1-579-463-11	VIBRATOR, CRYSTAL (32.768kHz)			
X902	1-795-482-11	VIBRATOR, CERAMIC (16MHz)			

MEMO

REVISION HISTORY

Clicking the version allows you to jump to the revised page.
Also, clicking the version at the top of the revised page allows you to jump to the next revised page.

Ver.	Date	Description of Revision
1.0	2006.03	New
1.1	2006.04	Addition of AEP, Russian, Saudi Arabia, Singapore, Argentina and Australian models to HCD-RG190 Addition of AEP, UK, Russian, Singapore, Argentina and Australian models to HCD-RG290 Change of DECK board (Suffix-12) (SUPPLEMENT-1) (ECN-ECB57489)
1.2	2006.06	Change of KEY LEFT, MIC. AUX. HP and PANEL Boards (Suffix-12 (RG290: Mexican model) or Suffix-13 (Except RG290: Mexican model)) Change of MAIN and KEY RIGHT boards (Suffix-12 (RG290: Mexican model) or Suffix-13 (Except RG290: Mexican model)) (SUPPLEMENT-2) (ECN-ECB62070)
1.3	2008.09	Addition of Part No. for Ref. No. IC901 on MAIN board (SMR-08118)