OZ9972/72A

FEATURES

- **OZ9972:** System synchronization for dimming and operation frequency
- Full-bridge topology
- Integrated high side N-MOSFET driver
- High drive capability and soft start function
- Constant operating frequency
- Built-in intelligence to manage lamp ignition and normal operation of CCFLs
- Open-lamp, over-voltage, over-current, and under-voltage lockout protection
- User-defined striking and shutdown delay timers
- Soft-start function

GENERAL DESCRIPTION

OZ9972/72A are high performance, Pulse Width Modulation (PWM) controllers designed for large-size LCD TV applications requiring multiple lamps. They achieve high efficiency power conversion with minimal switching loss in a PWM, full-bridge, N-Channel MOSFET topology.

OZ9972/72A provide high drive capability, support a wide input range, and provide a constant user-defined operating frequency.

APPLICATIONS

- LCD TV

APPLICATION DIAGRAMS

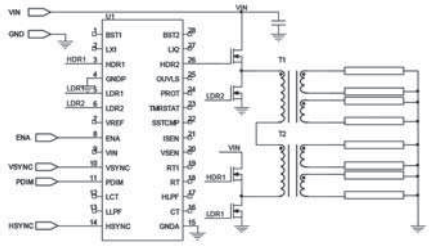

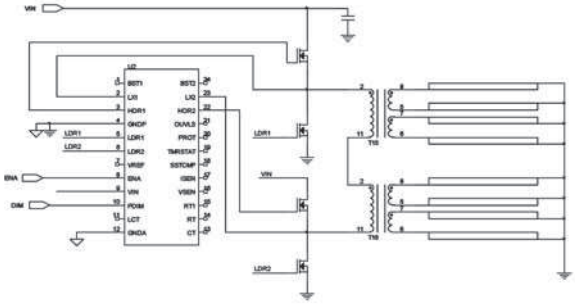

U.S. Patent #'s 6,259,615; 6,396,722; 6,570,344; 6,781,325; 6,804,129; 6,897,698; 6,936,975; 7,075,245; 7,126,289; 7,151,394; 7,190,123; 7,248,240; 7,345,431; 7,394,209; 7,417,382; 7,425,949; 7,515,445; 7,515,446; 7,550,928; 7,554,273; and more patents pending.