# HCD-SH2000

# SERVICE MANUAL

*E Model*

**Ver. 1.2 2012.02**

- HCD-SH2000 is the tuner, USB, CD and amplifier section in FST-SH2000/LBT-SH2000.

- "WALKMAN" and "WALKMAN" logo are registered trademarks of Sony Corporation.
- MPEG Layer-3 audio coding technology and patents licensed from Fraunhofer IIS and Thomson.
- Windows Media is either a registered trademark or trademark of Microsoft Corporation in the United States and/or other countries.
- This product contains technology subject to certain intellectual property rights of Microsoft. Use or distribution of this technology outside of this product is prohibited without the appropriate license(s) from Microsoft.

| | | |
|---|---|---|
| CD Section | CD Mechanism Type | CDM86B-DVBU101 |
| | Optical Pick-up Name | KHM-313CAB/C2NP |

## SPECIFICATIONS

### Amplifier section
The following are measured at AC 120 V - 240 V, 50/60 Hz
Power output (rated):
High channel
300 W + 300 W (at 4 Ω, 1 kHz, 1% THD)
Low channel
300 W + 300 W (at 4 Ω, 100 Hz, 1% THD)
RMS output power (reference):
High channel
500 W + 500 W (per channel at 4 Ω, 1 kHz)
Low channel
500 W + 500 W (per channel at 4 Ω, 100 Hz)

### Inputs
PC (AUDIO IN) L/R, TV (AUDIO IN) L/R, DVD/SAT (AUDIO IN) L/R, GAME (AUDIO IN) L/R
Voltage 2 V, impedance 47 kΩ
MIC
Sensitivity 1 mV, impedance 10 kΩ
⭠ A, ⭠ B port: Type A

### USB section
Supported bit rate
MP3 (MPEG 1 Audio Layer-3):
32 kbps – 320 kbps, VBR
WMA: 48 kbps – 192 kbps
AAC: 48 kbps – 320 kbps
Sampling frequencies
MP3 (MPEG 1 Audio Layer-3):
32 kHz/44.1 kHz/48 kHz
WMA: 44.1 kHz
AAC: 44.1 kHz
Transfer speed
Full-Speed
Supported USB device
Mass Storage Class
Maximum current
500 mA

### Disc player section
System
Compact disc and digital audio system
Laser Diode Properties
Emission Duration: Continuous
Laser Output*: Less than 44.6 µW
* This output is the value measurement at a distance of 200 mm from the objective lens surface on the Optical Pick-up Block with 7 mm aperture.
Frequency response
20 Hz – 20 kHz
Signal-to-noise ratio
More than 90 dB
Dynamic range
More than 88 dB

### Tuner section
FM stereo, FM/AM superheterodyne tuner
Antenna:
FM lead antenna
AM loop antenna

### FM tuner section
Tuning range
87.5 MHz – 108.0 MHz (50 kHz step)

### AM tuner section
Tuning range
AR, E2, E51 and MX models:
530 kHz – 1,710 kHz (10 kHz step)
531 kHz – 1,710 kHz (9 kHz step)
MY model:
530 kHz – 1,610 kHz (10 kHz step)
531 kHz – 1,602 kHz (9 kHz step)

### General
Power requirements
AC 120 V – 240 V, 50/60 Hz
Power consumption
320 W
Dimensions (w/h/d) (excl. speakers) (Approx.)
510 mm × 235 mm × 420 mm
Mass (excl. speakers) (Approx.)
10.0 kg
Supplied accessories
Remote control (1)
R6 (Size AA) batteries (2)
FM lead/AM loop antenna (1)
Speaker foot (8)

Design and specifications are subject to change without notice.

- Abbreviation
  - E2 : 120V AC area in E model
  - E51 : Chilean and Peruvian models
  - EA : Saudi Arabia model
  - MX : Mexican model
  - MY : Malaysia model
  - SAF : South African model

## MINI HI-FI COMPONENT SYSTEM

**9-890-576-03**
2012B08-1
© 2012.02
**Sony Corporation**
**Published by Sony EMCS (Malaysia) PG Tec**

SONY®

## SAFETY CHECK-OUT

After correcting the original service problem, perform the following safety check before releasing the set to the customer:
Check the antenna terminals, metal trim, "metallized" knobs, screws, and all other exposed metal parts for AC leakage. Check leakage as described below.

## LEAKAGE TEST

The AC leakage from any exposed metal part to earth ground and from all exposed metal parts to any exposed metal part having a return to chassis, must not exceed 0.5 mA (500 microamperes). Leakage current can be measured by any one of three methods.

1. A commercial leakage tester, such as the Simpson 229 or RCA WT-540A. Follow the manufacturers' instructions to use these instruments.
2. A battery-operated AC milliammeter. The Data Precision 245 digital multimeter is suitable for this job.
3. Measuring the voltage drop across a resistor by means of a VOM or battery-operated AC voltmeter. The "limit" indication is 0.75 V, so analog meters must have an accurate low-voltage scale. The Simpson 250 and Sanwa SH-63Trd are examples of a passive VOM that is suitable. Nearly all battery operated digital multimeters that have a 2V AC range are suitable. (See Fig. A)

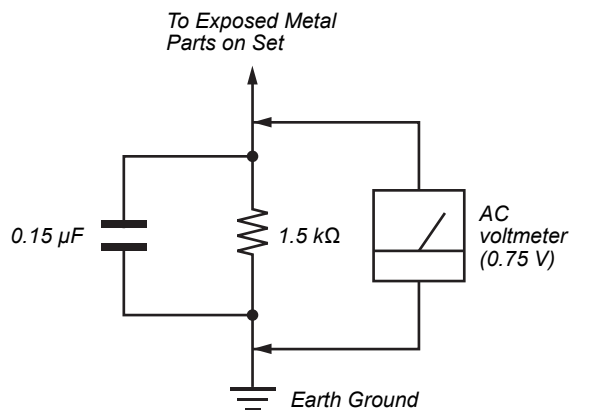


***Fig. A. Using an AC voltmeter to check AC leakage.***

**SAFETY-RELATED COMPONENT WARNING!**

**COMPONENTS IDENTIFIED BY MARK ⚠ OR DOTTED LINE WITH MARK ⚠ ON THE SCHEMATIC DIAGRAMS AND IN THE PARTS LIST ARE CRITICAL TO SAFE OPERATION. REPLACE THESE COMPONENTS WITH SONY PARTS WHOSE PART NUMBERS APPEAR AS SHOWN IN THIS MANUAL OR IN SUPPLEMENTS PUBLISHED BY SONY.**

TABLE OF CONTENTS


**1. SERVICING NOTES** ..... 4

**2. DISASSEMBLY**
2-1. Side Panel A, Side Panel B and Top Panel Section ..... 6
2-2. Back Panel Section ..... 7
2-3. Front Panel Section ..... 7
2-4. DMB21 Board..... 8
2-5. CDM Section ..... 8
2-6. CD MECHANISM DECK BLOCK (1) ..... 9
2-7. CD MECHANISM DECK BLOCK (2) ..... 9
2-8. DAMP Board, MAIN Board..... 10
2-9. SWITCHING REGULATOR ..... 10

**3. TEST MODE** ..... 11

**4. ELECTRICAL CHECK** ..... 13

**5. DIAGRAMS**
5-1. Block Diagram - RS SERVO, USB Section -..... 15
5-2. Block Diagram - MAIN Section -..... 16
5-3. Block Diagram - AMP Section -..... 17
5-4. Block Diagram - PANEL, POWER SUPPLY Section - . 18
5-5. Printed Wiring Board
- MAIN Board (Component Side) (Suffix 11) -..... 20
5-6. Printed Wiring Board
- MAIN Board (Conductor Side) (Suffix 11) - ..... 21
5-7. Printed Wiring Board
- MAIN Board (Component Side) (Suffix 12) - ..... 22
5-8. Printed Wiring Board
- MAIN Board (Conductor Side) (Suffix 12) - ..... 23
5-9. Schematic Diagram - MAIN Board (1/4) (Suffix 11) -... 24
5-10. Schematic Diagram - MAIN Board (2/4) (Suffix 11) -... 25
5-11. Schematic Diagram - MAIN Board (3/4) (Suffix 11) -... 26
5-12. Schematic Diagram - MAIN Board (4/4) (Suffix 11) -... 27
5-13. Schematic Diagram - MAIN Board (1/4) (Suffix 12) - .. 28
5-14. Schematic Diagram - MAIN Board (2/4) (Suffix 12) - .. 29
5-15. Schematic Diagram - MAIN Board (3/4) (Suffix 12) - .. 30
5-16. Schematic Diagram - MAIN Board (4/4) (Suffix 12) - .. 31
5-17. Printed Wiring Board
- DMB21 Board (Component Side) - ..... 32
5-18. Printed Wiring Board
- DMB21 Board (Conductor Side) - ..... 33
5-19. Schematic Diagram - DMB21 Board (1/3) - ..... 34
5-20. Schematic Diagram - DMB21 Board (2/3) - ..... 35
5-21. Schematic Diagram - DMB21 Board (3/3) - ..... 36
5-22. Printed Wiring Boards
- DAMP Board (Component Side) - ..... 37
5-23. Printed Wiring Boards
- DAMP Board (Conductor Side) -..... 38
5-24. Schematic Diagram - DAMP Board (1/4) - ..... 39
5-25. Schematic Diagram - DAMP Board (2/4) - ..... 40
5-26. Schematic Diagram - DAMP Board (3/4) - ..... 41
5-27. Schematic Diagram - DAMP Board (4/4) - ..... 42
5-28. Printed Wiring Boards - DISPLAY Board - ..... 43
5-29. Schematic Diagram - DISPLAY Board -..... 44
5-30. Printed Wiring Boards - VOLUME Board-..... 45
5-31. Schematic Diagram - VOLUME Board - ..... 46
5-32. Printed Wiring Boards - BUTTON, USB Board -..... 47
5-33. Schematic Diagram - BUTTON, USB Board - ..... 48
5-34. Printed Wiring Boards - VOLUME LED,
BOTTON LED AND TUNER Board -..... 49
5-35. Schematic Diagram - VOLUME LED,
BOTTON LED AND TUNER Board -..... 50
5-36. Printed Wiring Boards - AUDIO-IN Board - ..... 51
5-37. Schematic Diagram - AUDIO-IN Board -..... 51
5-38. Printed Wiring Boards - MIC Board - ..... 52
5-39. Schematic Diagram - MIC Board -..... 52

**6. EXPLODED VIEWS**
6-1. Main Section..... 65
6-2. Front Panel Section (1) ..... 66
6-3. Back Panel Section ..... 67
6-4. Chassis Section ..... 68
6-5. CDM Section ..... 69

**7. ELECTRICAL PARTS LIST** ..... 70

# SECTION 1
# SERVICING NOTES

### Notes on chip component replacement

- Never reuse a disconnected chip component.
- Notice that the minus side of a tantalum capacitor may be damaged by heat.

### Flexible Circuit Board Repairing

- Keep the temperature of the soldering iron around 270 °C during repairing.
- Do not touch the soldering iron on the same conductor of the circuit board (within 3 times).
- Be careful not to apply force on the conductor when soldering or unsoldering.

### UNLEADED SOLDER

Boards requiring use of unleaded solder are printed with the leadfree mark (LF) indicating the solder contains no lead.
(Caution: Some printed circuit boards may not come printed with the lead free mark due to their particular size)

### : LEAD FREE MARK

Unleaded solder has the following characteristics.

- Unleaded solder melts at a temperature about 40 °C higher than ordinary solder.
  Ordinary soldering irons can be used but the iron tip has to be applied to the solder joint for a slightly longer time.
  Soldering irons using a temperature regulator should be set to about 350 °C.
  Caution: The printed pattern (copper foil) may peel away if the heated tip is applied for too long, so be careful!
- Strong viscosity
  Unleaded solder is more viscous (sticky, less prone to flow) than ordinary solder so use caution not to let solder bridges occur such as on IC pins, etc.
- Usable with ordinary solder
  It is best to use only unleaded solder but unleaded solder may also be added to ordinary solder.

**CAUTION**
Use of controls or adjustments or performance of procedures other than those specified herein may result in hazardous radiation exposure.

### NOTES ON HANDLING THE OPTICAL PICK-UP BLOCK OR BASE UNIT

The laser diode in the optical pick-up block may suffer electrostatic break-down because of the potential difference generated by the charged electrostatic load, etc. on clothing and the human body.
During repair, pay attention to electrostatic break-down and also use the procedure in the printed matter which is included in the repair parts.
The flexible board is easily damaged and should be handled with care.

### NOTES ON LASER DIODE EMISSION CHECK

The laser beam on this model is concentrated so as to be focused on the disc reflective surface by the objective lens in the optical pickup block. Therefore, when checking the laser diode emission, observe from more than 30 cm away from the objective lens.

CLASS 1 LASER PRODUCT
LUOKAN 1 LASERLAITE
KLASS 1 LASERAPPARAT

This appliance is claassified as a CLASS 1 LASER product. This label is located on the rear exterior.

### MODEL IDENTIFICATION

*- BACK PANEL -*

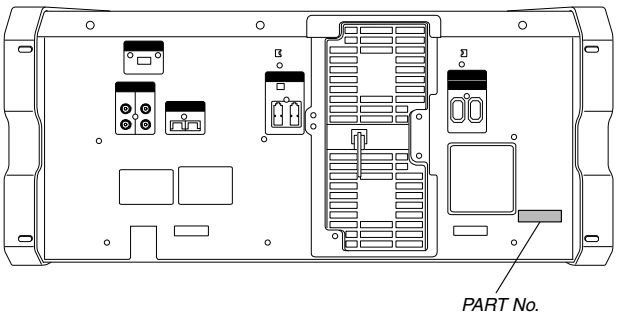


| Model | Part No. |
|---|---|
| E2, E51, EA, MY, SAF | 4-275-656-0□ |
| MX | 4-275-656-1□ |

- Abbreviation
  E2 : 120 V AC area in E model
  E51 : Chilean and Peruvian models
  EA : Saudi Arabian model
  MX : Mexican model
  MY : Malaysia model
  SAF : South African model

### PLAYABLE DISC

| Format of discs | Logo |
|---|---|
| • AUDIO CD | COMPACT disc DIGITAL AUDIO |
| • CD-R/-RW in AUDIO CD format<br>• CD-R/-RW in DATA CD format, containing MP3 audio tracks [1] that conforms to ISO 9660 [2] Level 1/Level 2, Joliet (in expansion format), or Multi Session [3] | COMPACT disc DIGITAL AUDIO Recordable<br>COMPACT disc Recordable<br>COMPACT disc ReWritable<br>COMPACT disc DIGITAL AUDIO ReWritable |

1) MP3 (MPEG 1 Audio Layer 3) is a standard format defined by ISO/MPEG which compresses audio data. MP3 audio tracks must be in MPEG 1 Audio Layer 3 format.
2) A logical format of files and folders on CD-ROMs, defined by ISO (International Organization for Standardization).
3) This is a recording method that enables adding of data using the Track-At-Once method. Conventional discs begin at a disc control area called the Lead-in and end at an area called Lead-out. A Multi Session disc is a disc having multiple sessions, with each segment from Lead-in to Lead-out regarded as a single session.

### NOTE OF REPLACING THE IC102 AND IC4605 ON THE DMB21 BOARD

IC102 and IC4605 on the DMB21 board cannot exchange with single. When these parts on the DMB21 board are damaged, exchange the entire mounted board.

### NOTE OF REPLACEMENT OF THE MS-214 BOARD

When the MS-214 board is defective, exchange the entire MD (AU) ASSY.

### MAIN BOARD DISCRIMINATION

In this set, the MAIN board has been changed in the midway of production.
Repair after distinguishing each type set to doing the repair referring to the following.

**– MAIN Board (Component Side) –**

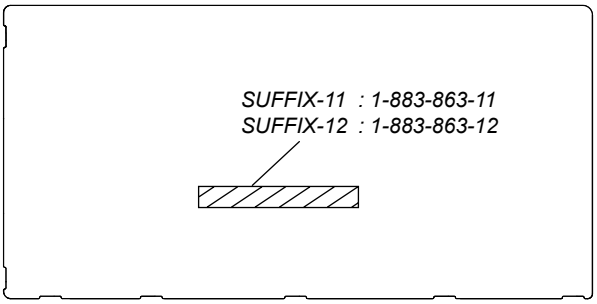


### NOTE OF REPLACING THE IC103 AND C242 (Combination: TYPE B) ON THE MAIN BOARD (Suffix-12)

IC103 and C242 (Combination: TYPE B) on the MAIN board (Suffix-12) cannot exchange with single. When these parts on the MAIN board (Suffix-12) are damaged, remove IC103 and C242 (Combination: TYPE B) and replace with IC102 and C239 (Combination: TYPE A)

## HOW TO EJECT THE DISC WHEN POWER SWITCH TURNS OFF

**Note:** Please take out the CD mechanism block from a set referring to “SECTION 2 DISASSEMBLY”.

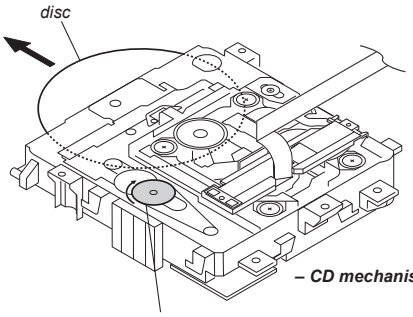


***– CD mechanism block bottom view –***

*Please rotate the pully in the direction of the arrow and eject the disc.*

# SECTION 2
# DISASSEMBLY

**Note:** Disassemble the unit in the order as shown below.

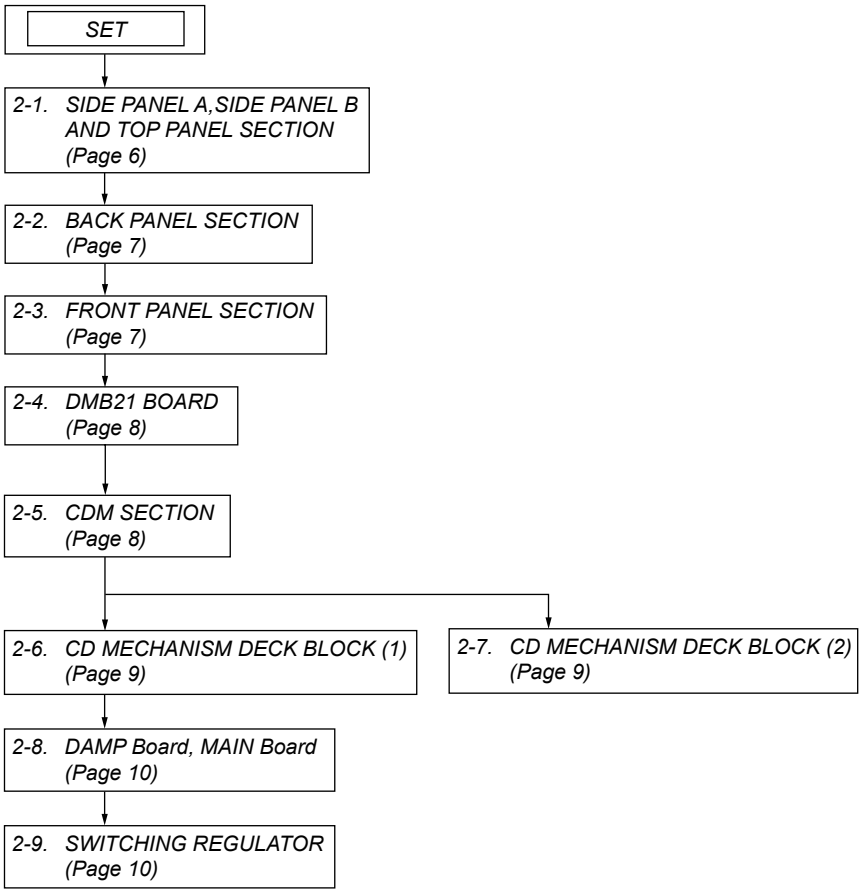


**Note:** Follow the disassembly procedure in the numerical order given.

## 2-1. SIDE PANEL A, SIDE PANEL B AND TOP PANEL SECTION

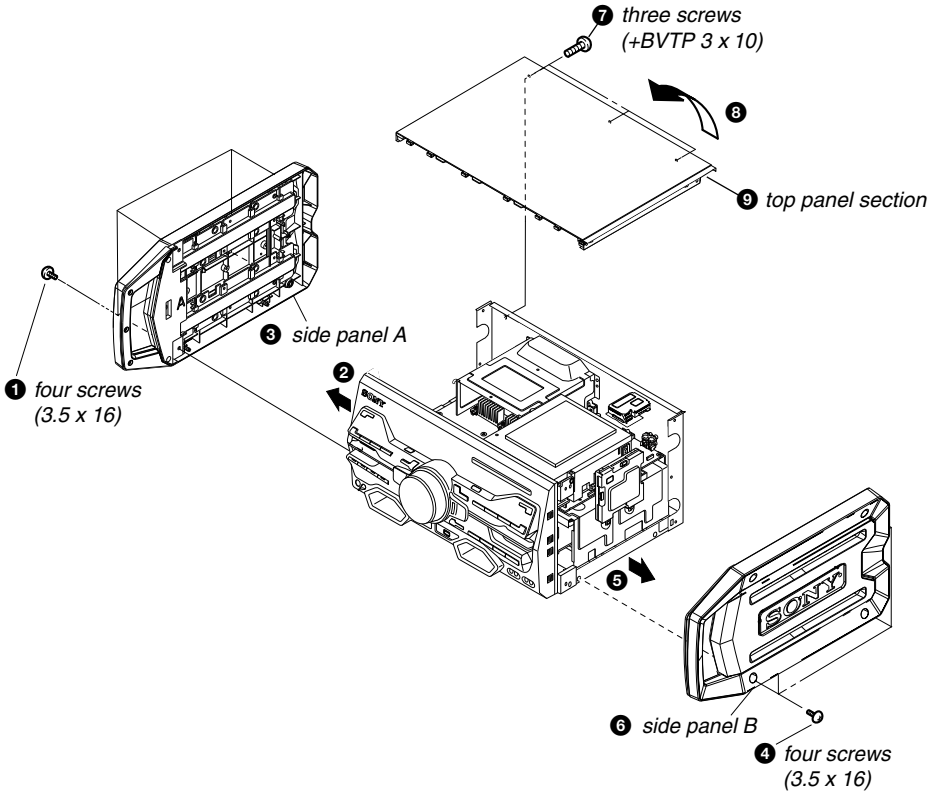

## 2-2. BACK PANEL SECTION

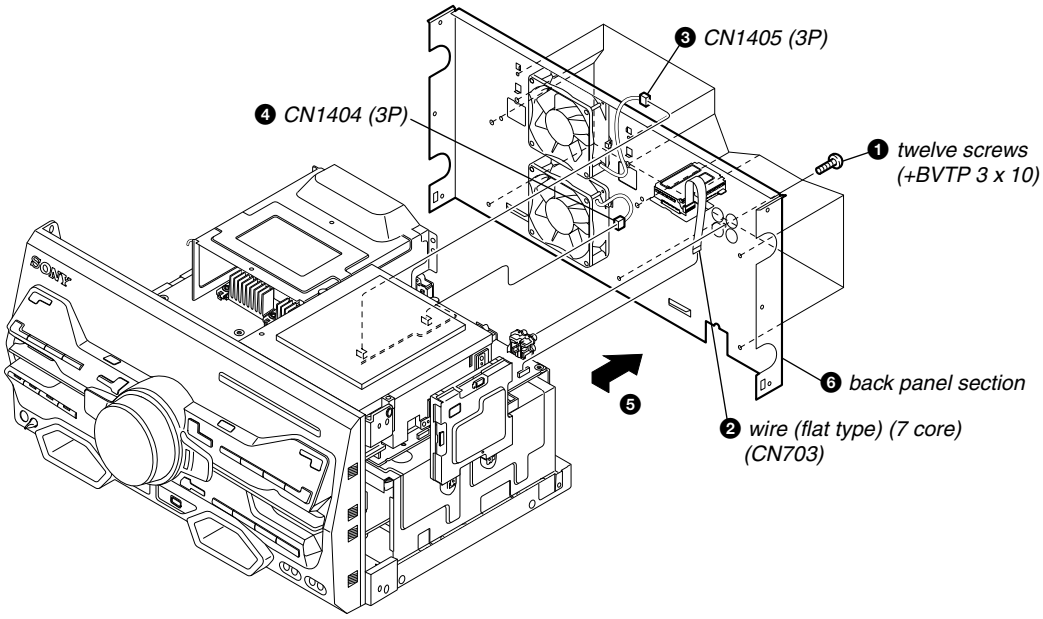


## 2-3. FRONT PANEL SECTION

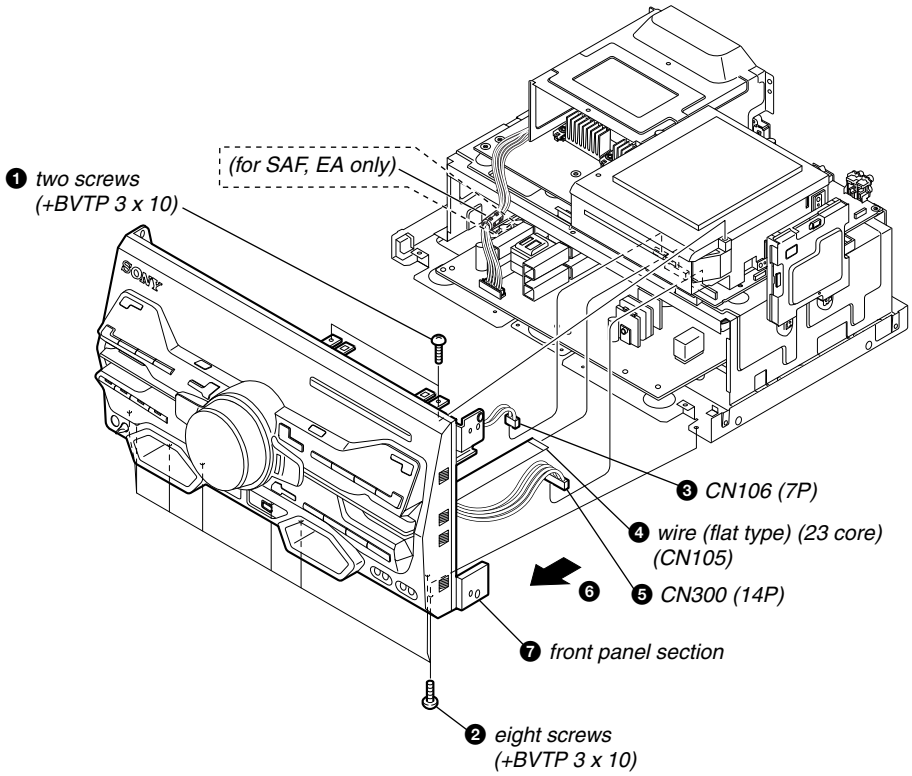

## 2-4. DMB21 BOARD

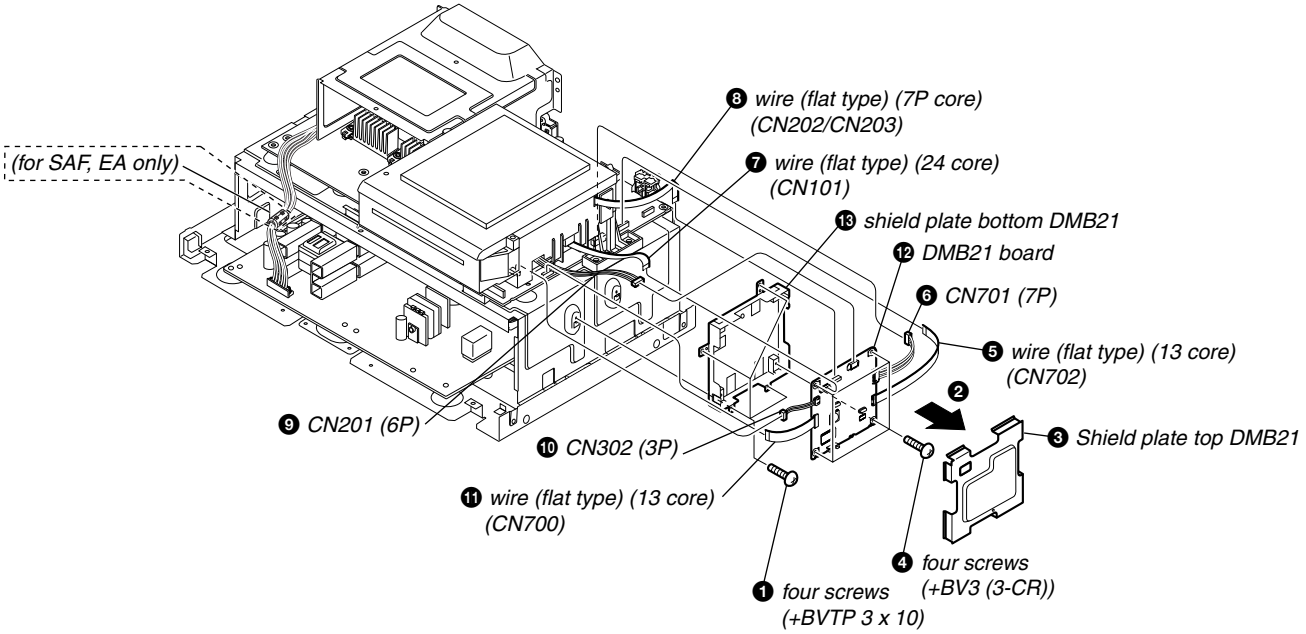


## 2-5. CDM SECTION

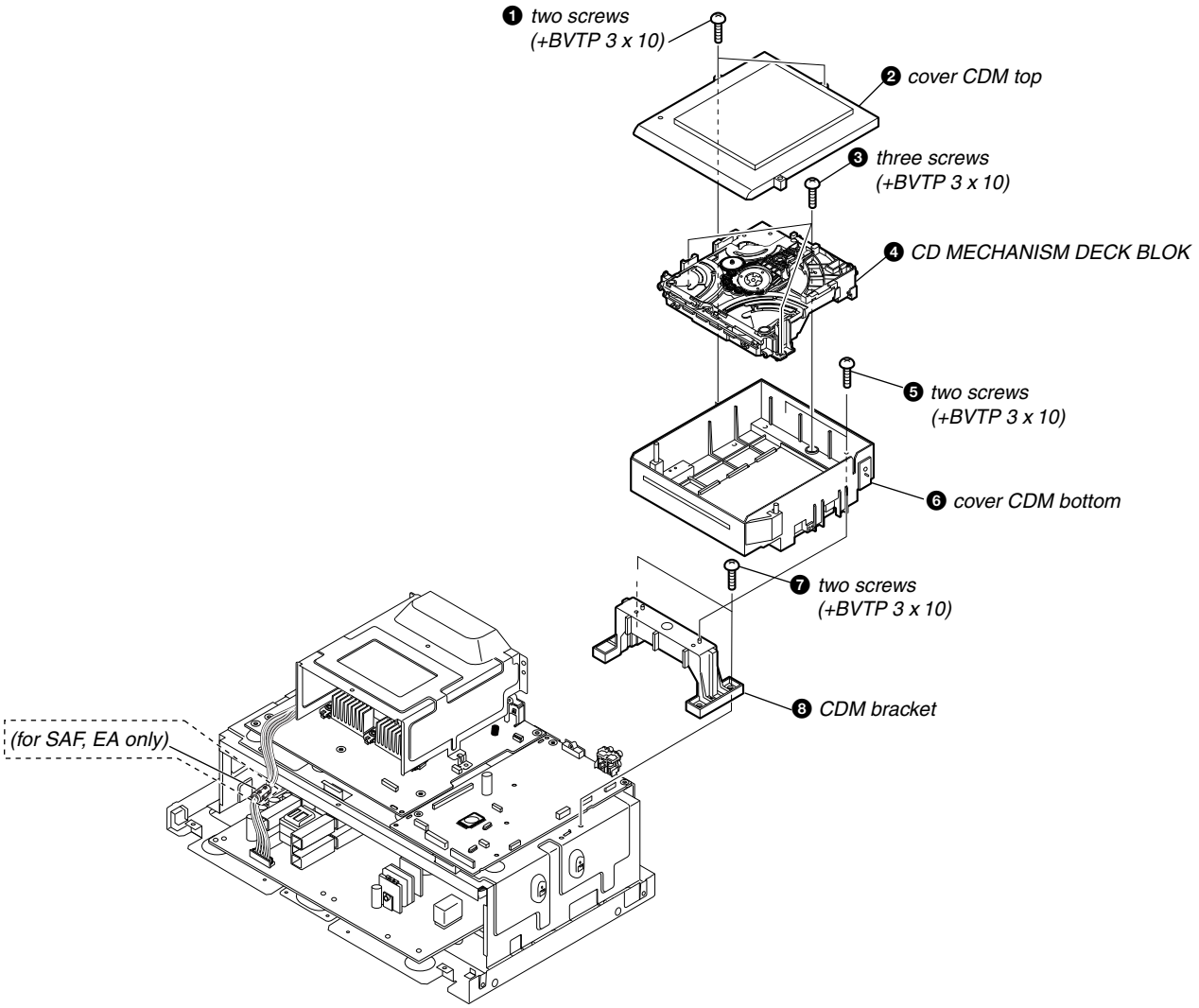

## 2-6. CD MECHANISM DECK BLOCK (1)

**Note 1 :** Before disconnecting the wire (flat type) (24 core) of optical pick-up block, solder the short-land.

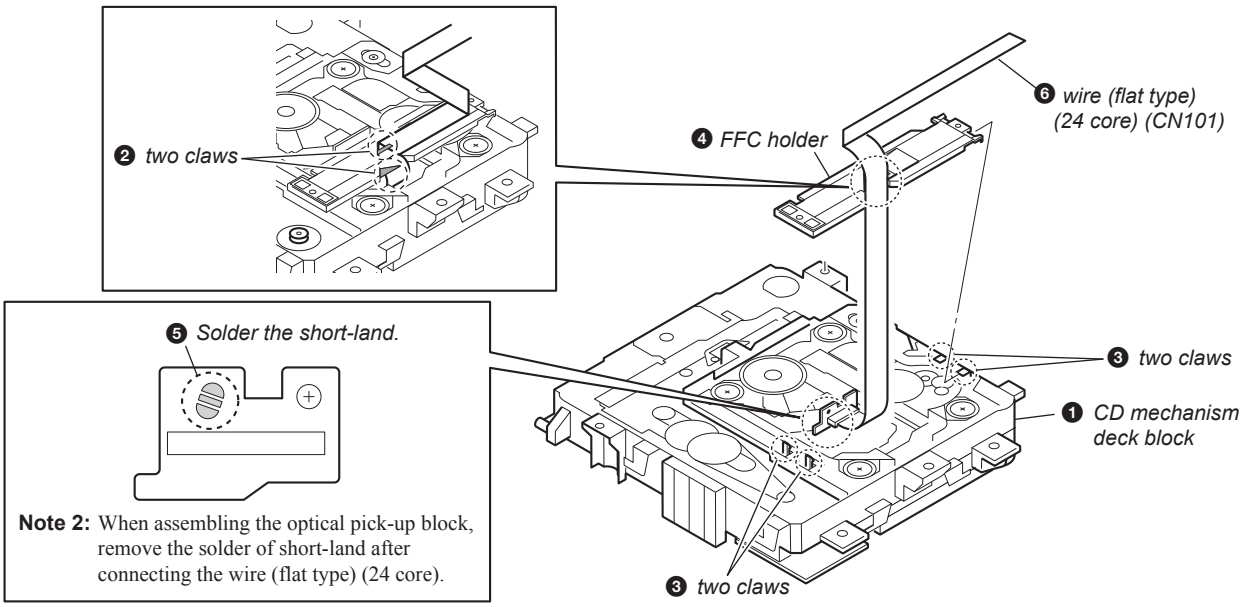


***– CD mechanism deck block bottom view –***

## 2-7. CD MECHANISM DECK BLOCK (2)

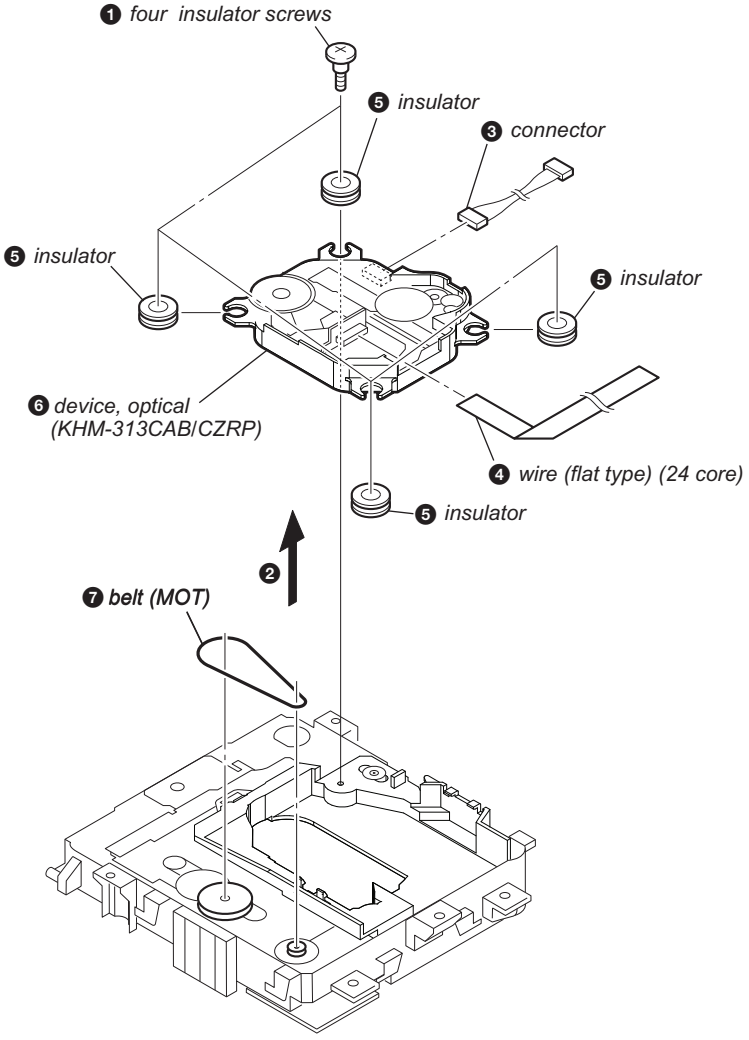


***– CD mechanism deck block bottom view –***

## 2-8. DAMP BOARD, MAIN BOARD

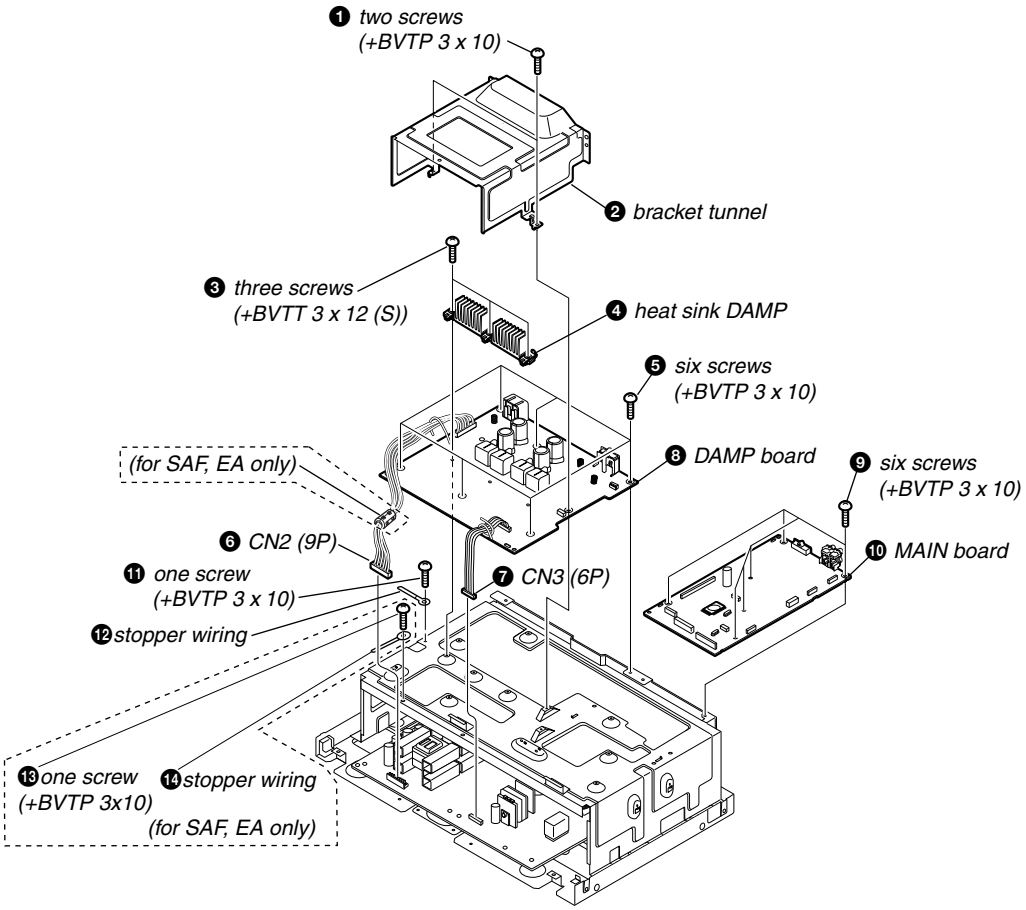


## 2-9. SWITCHING REGULATOR

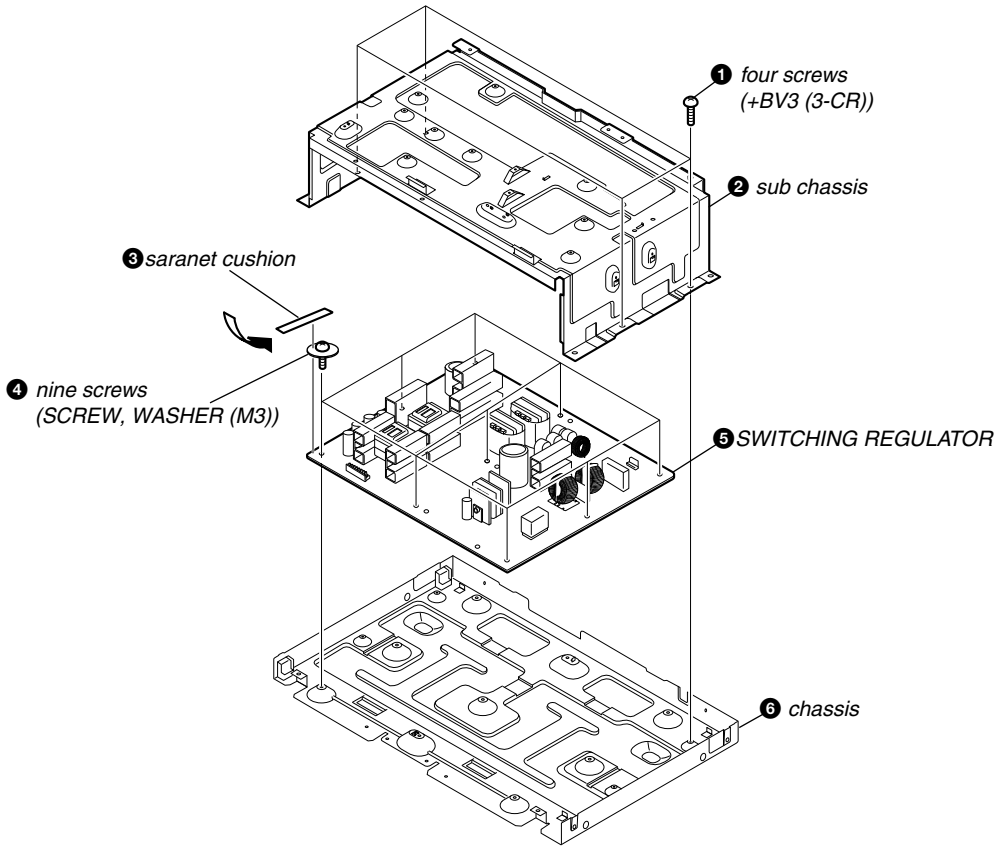

# SECTION 3
# TEST MODE

## PANEL TEST MODE

This mode is used to check the fluorescent indicator tube, LEDs, keys, [MASTER VOLUME] jog, model, destination and software version.

**Procedure:**

1. Press [SEARCH] button and [OPTIONS] button simultaneously and hold 3 seconds.
2. All LEDs and segments in fluorescent indicator tube will light up.
3. When you want to enter to the software version display mode, press [FLANGER] button. The model information appears on the fluorescent indicator tube. Press [FLANGER] button again to view the destination information.
4. During the destination information display, press [FLANGER] button. Each time [FLANGER] button is pressed, the fluorescent indicator tube shows the version of each category software in the following sequence: SC, MTK (DMB Board firmware version), UI, PF, SYS, CD, CDMA, CDMB, ST, TA, TAS, TM and return back to model information display.
5. When [SEARCH] button is pressed while the version numbers are being displayed except model and destination, the date of the software creation appears. When [SEARCH] button is pressed again, the display returns to the software version display.
6. Press [ISOLATOR] button, the key check mode is activated.
7. In the key check mode, the fluorescent indicator tube displays "K 0 V0". Each time a button is pressed, "K" value increases. However, once a button has been pressed, it is no longer taken into account.
   "V" value increases in the manner of 0, 1, 2, 3 ... if [MASTER VOLUME] knob is turned clockwise, or it decreases in the manner of 0, 9, 8, 7 ... if [MASTER VOLUME] knob is turned counterclockwise.
8. When [SOUND FLASH] button is pressed after all LEDs and segments in fluorescent indicator tube light up, alternate segments in fluorescent indicator tube and LEDs would light up. If you press [SOUND FLASH] button again, another half of alternate segments in fluorescent indicator tube and LEDs would light up. Pressing [SOUND FLASH] button again would cause all segments in fluorescent indicator tube and LEDs light OFF. Pressing [SOUND FLASH] button again would cause all segments in fluorescent indicator tube and all LEDs light up.
9. To release from this mode, press the [SEARCH] button and [OPTIONS] button in the same manner as step 1, or disconnect the power cord.

## COMMON TEST MODE

This mode is used to check operations of the Amplifier section.

**Procedure:**

To enter Common Test Mode

1. Press [USB/USB SELECT] button and [PRESET EQ] button simultaneously and hold for 3 seconds.
2. The upper segments of fluorescent indicator tube will blink. The function is changed to TV and the volume is changed to VOLUME MIN.

Check of Amplifier

1. Press [PRESET EQ] button repeatedly until a message "GEQ MAX" appears on the fluorescent indicator tube. GEQ increases to its maximum.
2. Press [PRESET EQ] button repeatedly until a message "GEQ MIN" appears on the fluorescent indicator tube. GEQ decreases to its minimum.
3. Press [PRESET EQ] button repeatedly until a message "GEQ FLAT" appears on the fluorescent indicator tube. GEQ is set to flat.
4. When the [MASTER VOLUME] knob is turned clockwise even slightly, the sound volume increases to its maximum and a message "VOLUME MAX" appears on the fluorescent indicator tube.
5. When the [MASTER VOLUME] knob is turned counterclockwise even slightly, the sound volume decreases to its minimum and a message "VOLUME MIN" appears on the fluorescent indicator tube.

To release from Common Test mode

1. To release from this mode, press [I/⏻] button.
2. The cold reset is enforced at the same time.

## COLD RESET

The cold reset clears all data including preset data stored in the EEPROM to initial conditions. Execute this mode when returning the set to the customer.

**Procedure:**

1. Press [I/⏻] button to turn on the system.
2. Press [ ■ ] button and [I/⏻] button simultaneously for 3 seconds.
3. "COLD RESET" appears on the fluorescent indicator tube. After that, the fluorescent indicator tube becomes blank for a while, and the system is reset.

## TUNER STEP CHANGE

The step interval of AM channels can be toggled between 9 kHz and 10 kHz. This mode is not available for Saudi Arabian, European and Russian models.

**Procedure:**

1. Press [I/⏻] button to turn on the system.
2. Press [FUNCTION] button repeatedly to select the "AM".
3. Press [I/⏻] button to turn off the system.
4. Press [ENTER] button and [I/⏻] button simultaneously. The system turns on automatically. The message "AM 9K STEP" or "AM 10K STEP" appears on the fluorescent indicator tube and thus the channel step is changed.

## CD SHIP MODE (WITH MEMORY CLEAR)

This mode moves the optical pick-up to the position durable to vibration and clears all data including preset data stored in the data flash to initial conditions during the next AC-In. Use this mode when returning the set to the customer after repair.

**Procedure:**

1. Press [I/⏻] button to turn on the system.
2. Select CD function and without dics inserted.
3. Press [EJECT] button and [I/⏻] button simultaneously for 3 seconds. The system turns off automatically.
4. A message "MECHA LOCK" is displayed on the fluorescent indicator tube and the CD ship mode is set.

## CD SHIP MODE (WITHOUT MEMORY CLEAR)

This mode moves the optical pick-up to the position durable to vibration. Use this mode when returning the set to the customer after repair.

**Procedure:**

5. Press [I/⏻] button to turn on the system.
6. Select CD function and without dics inserted.
7. Press [CD] button and [I/⏻] button simultaneously. The system turns off automatically.
8. A message "MECHA LOCK" is displayed on the fluorescent indicator tube and the CD ship mode is set.

### DISC THEFT PREVENTION MODE

This mode let prevent disc to be ejected. When this mode is activated, the disc will not eject when [EJECT] button is pressed. The message "LOCKED" will be displayed on the fluorescent indicator tube. This mode only applied when there is disc.

**Procedure:**

1. Press [I/⏻] button to turn on the system.
2. Select CD function.
3. Press [PLAY/PAUSE] button and [EJECT] button simultaneously for 3 seconds. The message "LOCKED" or "UNLOCKED" displayed on the fluorescent indicator tube.

### FACTORY PRESET

This mode is use to load all the factory use preset frequencies into FM 1-FM 20 and AM 1-AM 10. Originally, frequency of FM 1-FM 20 and AM 1-AM10 are set to the minimum frequency.

**Procedure:**

1. Press [I/⏻] button to turn on the system.
2. Press [SEARCH] button and [TUNER/BAND] button simultaneously and hold for 3 seconds, message "FACTORY" appears on the fluorescent indicator tube. The function is changed to TUNER automatically.

### [PROTECT KIND CHECK TEST MODE]

- This mode is used to check types of protect occurred during protector on.

**Procedure:**

1. During protection on, fluorescent indicator tube shows blinking message "PROTECT".
2. Press [PLAY/PAUSE] button and [STOP] button simultaneously.
3. Fluorescent indicator tube display will toggle between "PROTECT" message and type of protection mode.
   Below table explains on different types of protection mode.

| Indication on display tube | Breakdown of defect |
|---|---|
| AMPLIFIER | Defect of AMP circuit |
| MTK POWER | No power supply to DMB mount |
| POWER SUPPLY | Defect of power supply circuit to AMP |
| FANBLOCK | Defect of DC FAN and DC FAN driver circuit |

**1. Defect of AMP circuit**

**1-1. If PROTECT mode is "AMPLIFIER",**

The following defect might be possible.

| Defects | Possible cause |
|---|---|
| OTP (Over Temperature Protection) | Unusual heat up of MOSFET by improper assembly of heatsink, destruction of MOSFET etc.. |
| UVP (Under Voltage Protection) | Unusual output voltage of Q1403, Q1404 and IC1402. |
| OCP (Over Current Protection) | The overcurrent condition to MOSFET occurs by defect of MOSFET or defect of SP output line or output is short-circuit. |
| DC Detection | DC appears in SP terminal by defect of AMP IC and MOSFET. |
| Unusual output of Power mount | The power mount has unusual output. |

**1-2. If speaker does not have output even if the set status is not in PROTECT mode**

The following defect might be possible.

| Defects | Possible cause |
|---|---|
| RESET defect | Reset signal status from micon is not 'H' . |

**2. Defect of power supply circuit to AMP**

**2-1. If the PROTECT mode is "POWER SUPPLY",**

There is possibility of unusual power supply of any of the AMP IC or Pre-amplier.

- To release from this mode.
  Press [PLAY/PAUSE] button and [STOP] button simultaneously again or unplug and re-plug in the power cord.

# SECTION 4
# ELECTRICAL CHECK

**TUNER SECTION** | 0 dB = 1 μV

**FM AUTO STOP CHECK**

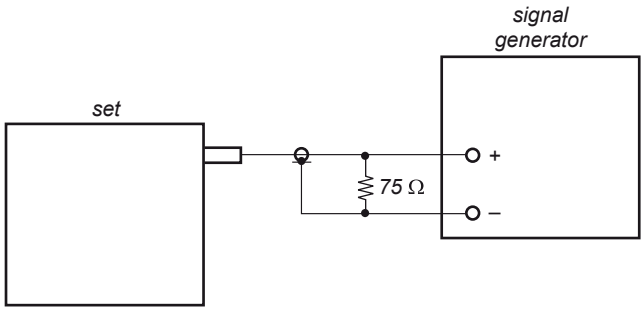


**Procedure:**

1. Turn the power on.
2. Input the following signal from Signal Generator to FM antenna input directly.

Carrier frequency : A = 87.5 MHz, B = 98 MHz, C = 108 MHz
Deviation : 75 kHz
Modulation : 1 kHz
ANT input : 35 dBu (EMF)

**Note:** Please use 75 ohm "coaxial cable" to connect SG and the set. You cannot use video cable for checking.
Please use SG whose output impedance is 75 ohm.

3. Set to FM tuner function and scan the input FM signal with automatic scanning.
4. Confirm that input Frequency of A, B and C detected and automatic scanning stops.

The stop of automatic scanning means "The station signal is received in good condition".

# SECTION 5
# DIAGRAMS

- **Circuit Boards Location**

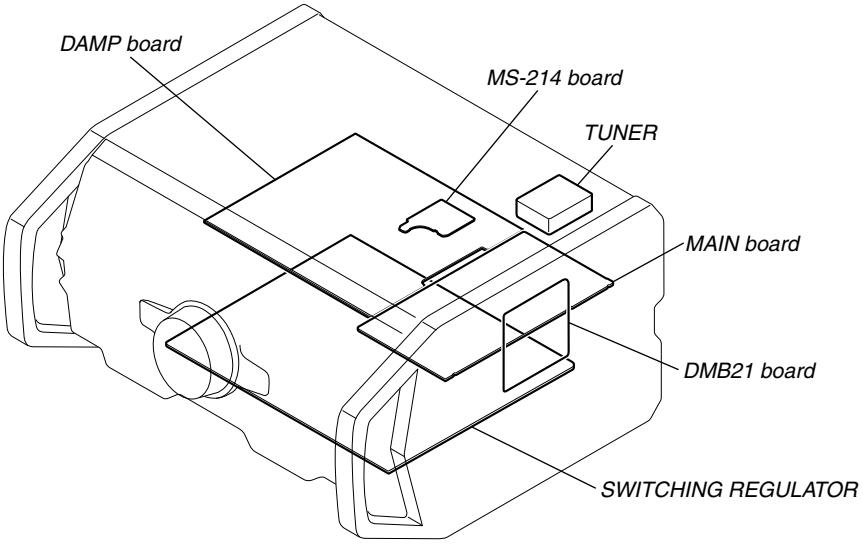


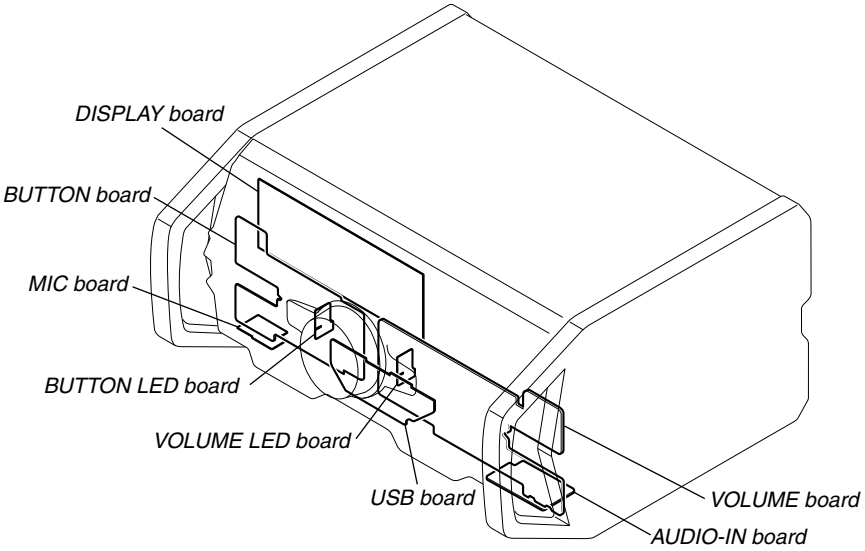

## 5-1. BLOCK DIAGRAM – RS SERVO, USB Section –

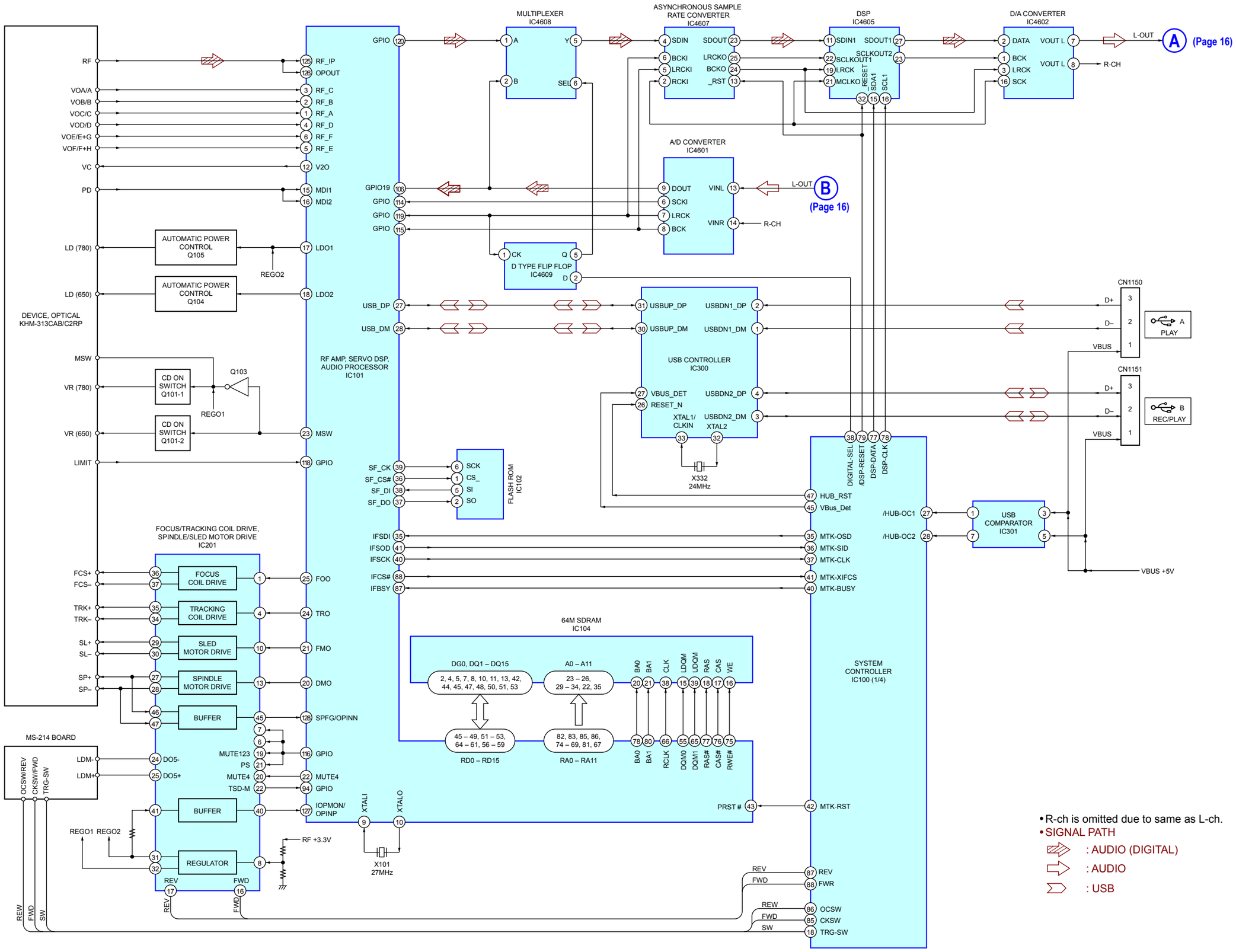


- R-ch is omitted due to same as L-ch.
- SIGNAL PATH
  - : AUDIO (DIGITAL)
  - : AUDIO
  - : USB

## 5-2. BLOCK DIAGRAM – MAIN Section –

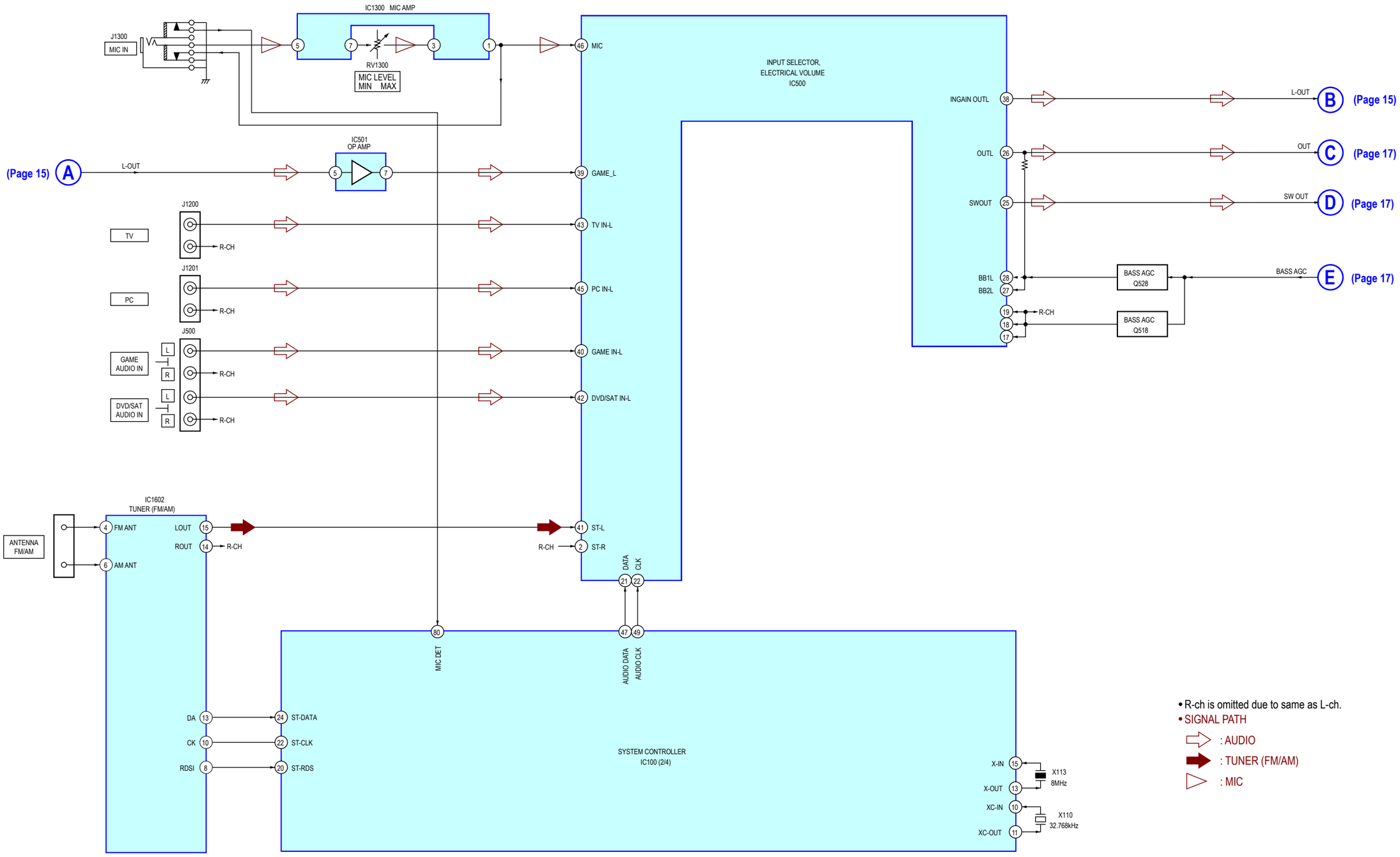


- R-ch is omitted due to same as L-ch.
- SIGNAL PATH
  - : AUDIO
  - : TUNER (FM/AM)
  - : MIC

## 5-3. BLOCK DIAGRAM – AMP Section –

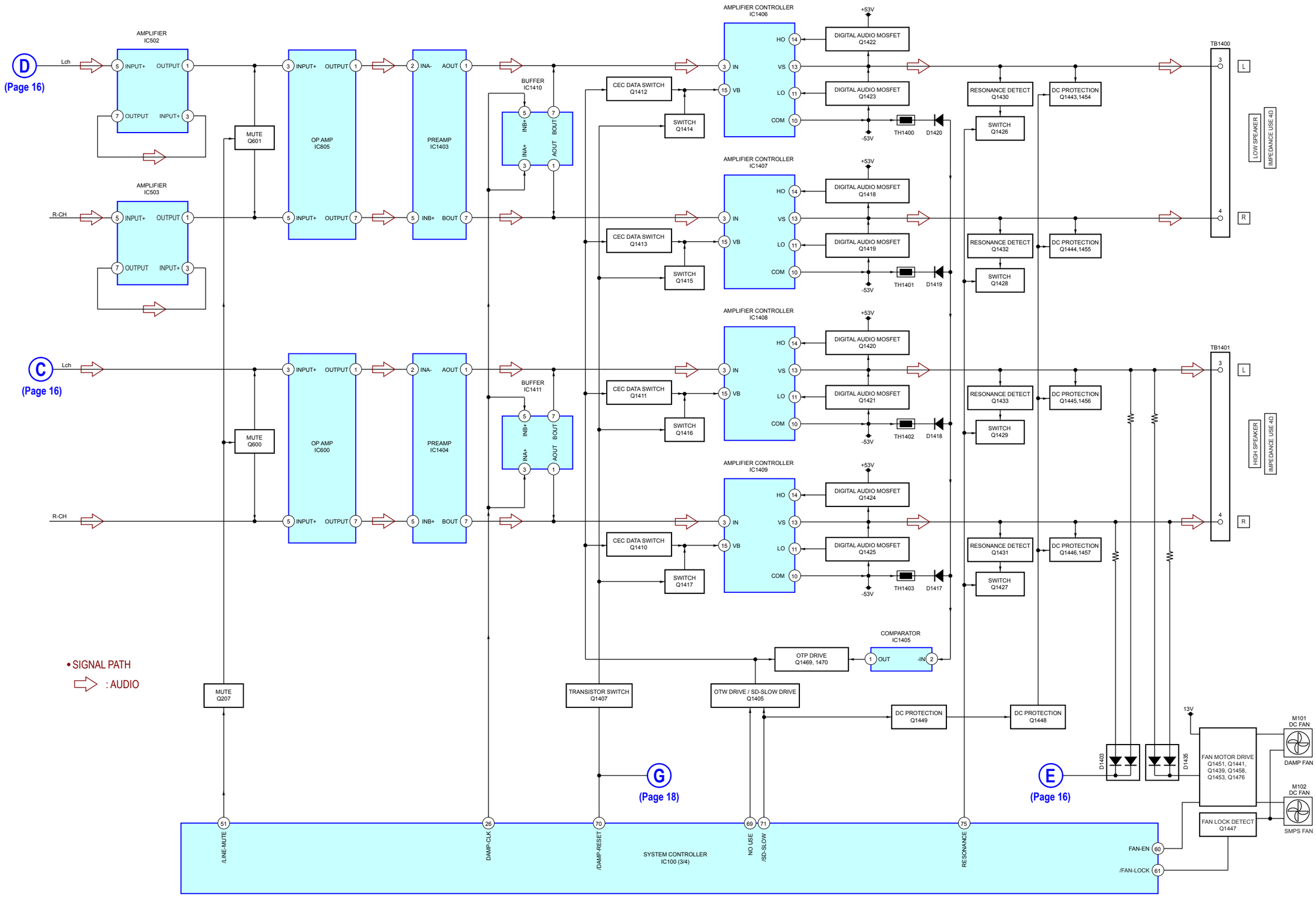

## 5-4. BLOCK DIAGRAM – PANEL, POWER SUPPLY Section –

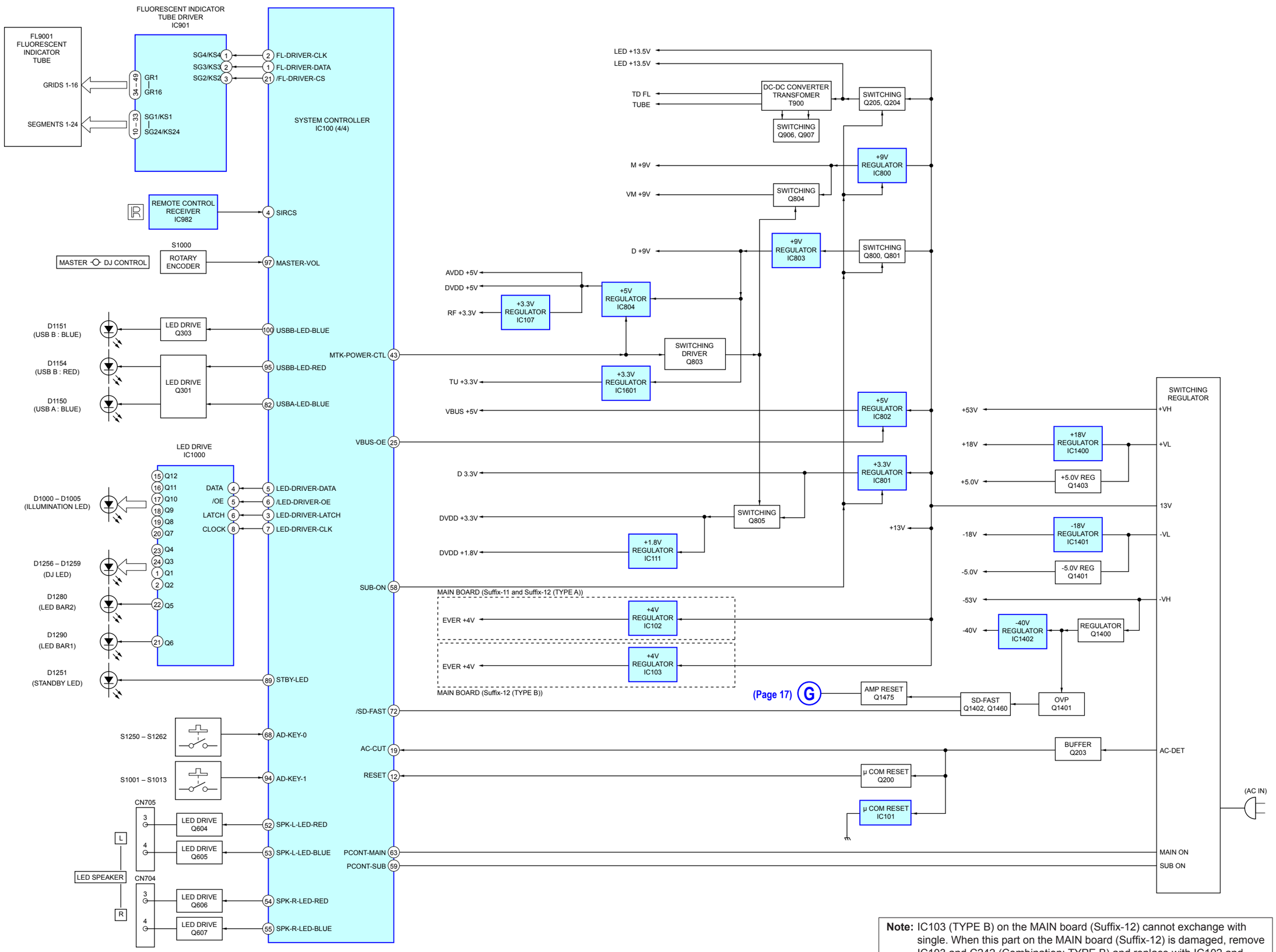


**Note:** IC103 (TYPE B) on the MAIN board (Suffix-12) cannot exchange with single. When this part on the MAIN board (Suffix-12) is damaged, remove IC103 and C242 (Combination: TYPE B) and replace with IC102 and C239 (Combination: TYPE A).

## • Note for Printed Wiring Boards and Schematic Diagrams

**Note on Printed Wiring Board:**
- ○——— : parts extracted from the component side.
- ——— : parts extracted from the conductor side.
- ▭ : Pattern from the side which enables seeing.
  (The other layer's patterns are not indicated.)

**Caution:**

| | |
|---|---|
| Pattern face side: (Conductor Side) | Parts on the pattern face side seen from the pattern face are indicated. |
| Parts face side: (Component Side) | Parts on the parts face side seen from the parts face are indicated. |

- Indication of transistor

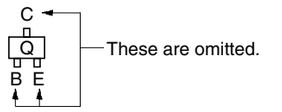


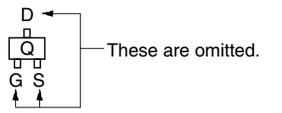


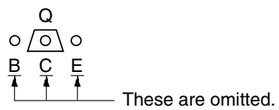


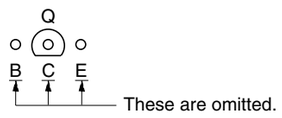


- Abbreviation
  E2 : 120 V AC area in E model
  E51 : Chilean and Peruvian models
  EA : Saudi Arabia model
  MX : Mexican model
  MY : Malaysia model
  SAF : South African model

**Note on Schematic Diagram:**
- All capacitors are in μF unless otherwise noted. (p: pF) 50 WV or less are not indicated except for electrolytics and tantalums.
- All resistors are in Ω and 1/4 W or less unless otherwise specified.
- : nonflammable resistor.
- ▭ : panel designation.

**Note:** The components identified by mark ⚠ or dotted line with mark ⚠ are critical for safety. Replace only with part number specified.

- ▬▬ : B+ Line.
- ▬ ▬ ▬ : B– Line.
- Voltage and waveforms are dc with respect to ground under no-signal (detuned) conditions.
  no mark : TUNER
  < > : CD PLAY
  * : Impossible to measure
- Voltages are taken with a VOM (Input impedance 10 MΩ). Voltage variations may be noted due to normal production tolerances.
- Waveforms are taken with a oscilloscope. Voltage variations may be noted due to normal production tolerances.
- Circled numbers refer to waveforms.
- Signal path.
  ⇨ : AUDIO
  ⇨ : USB
  ➡ : TUNER
  ⇨ : AUDIO (DIGITAL)
- Abbreviation
  E2 : 120 V AC area in E model
  E51 : Chilean and Peruvian models
  EA : Saudi Arabia model
  MX : Mexican model
  MY : Malaysia model
  SAF : South African model

5-5. PRINTED WIRING BOARDS – MAIN BOARD (Component Side) (Suffix-11) – • See page 14 for Circuit Boards Location. • : Uses unleaded solder.

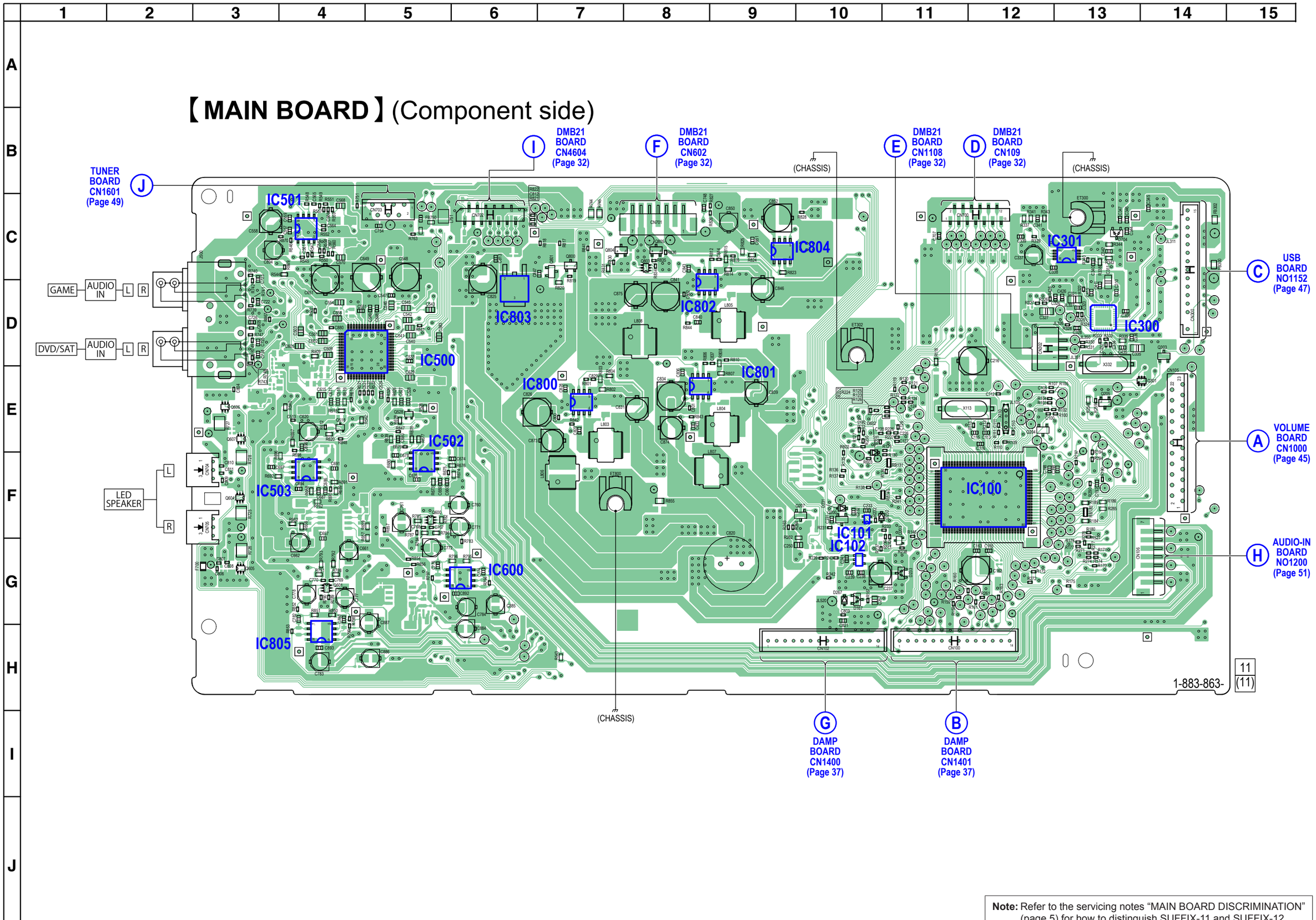


**Note:** Refer to the servicing notes "MAIN BOARD DISCRIMINATION" (page 5) for how to distinguish SUFFIX-11 and SUFFIX-12.

5-6. PRINTED WIRING BOARDS – MAIN BOARD (Conductor Side) (Suffix-11) – • See page 14 for Circuit Boards Location. • : Uses unleaded solder.

## 【MAIN BOARD】(Conductor side)

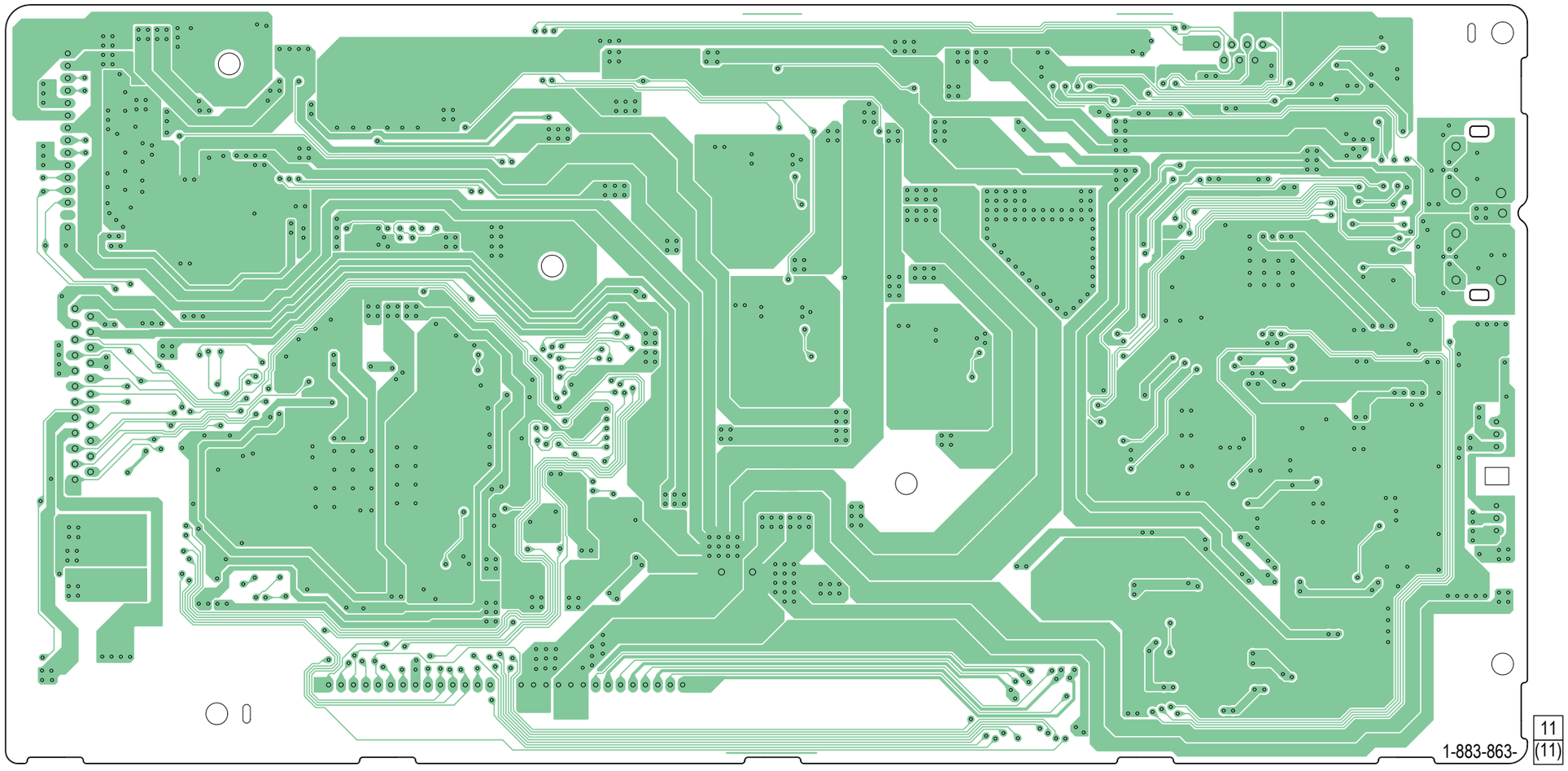


**Note:** Refer to the servicing notes "MAIN BOARD DISCRIMINATION" (page 5) for how to distinguish SUFFIX-11 and SUFFIX-12.

5-7. PRINTED WIRING BOARDS – MAIN BOARD (Component Side) (Suffix-12) – • See page 14 for Circuit Boards Location. • : Uses unleaded solder.

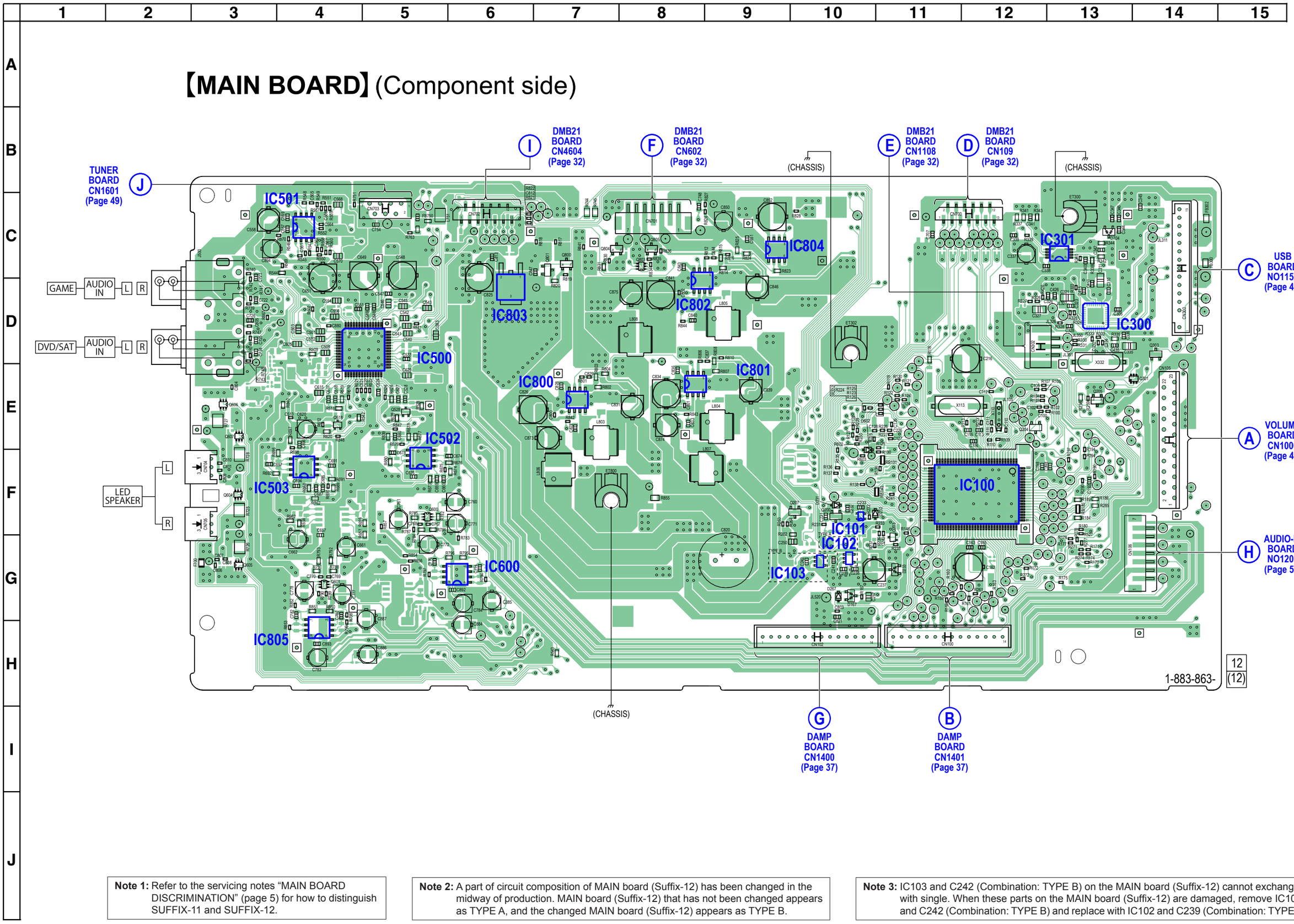


**Note 1:** Refer to the servicing notes "MAIN BOARD DISCRIMINATION" (page 5) for how to distinguish SUFFIX-11 and SUFFIX-12.

**Note 2:** A part of circuit composition of MAIN board (Suffix-12) has been changed in the midway of production. MAIN board (Suffix-12) that has not been changed appears as TYPE A, and the changed MAIN board (Suffix-12) appears as TYPE B.

**Note 3:** IC103 and C242 (Combination: TYPE B) on the MAIN board (Suffix-12) cannot exchange with single. When these parts on the MAIN board (Suffix-12) are damaged, remove IC103 and C242 (Combination: TYPE B) and replace with IC102 and C239 (Combination: TYPE A).

5-8. PRINTED WIRING BOARDS – MAIN BOARD (Conductor Side) (Suffix-12) – • See page 14 for Circuit Boards Location. • : Uses unleaded solder.

## 【MAIN BOARD】(Conductor side)

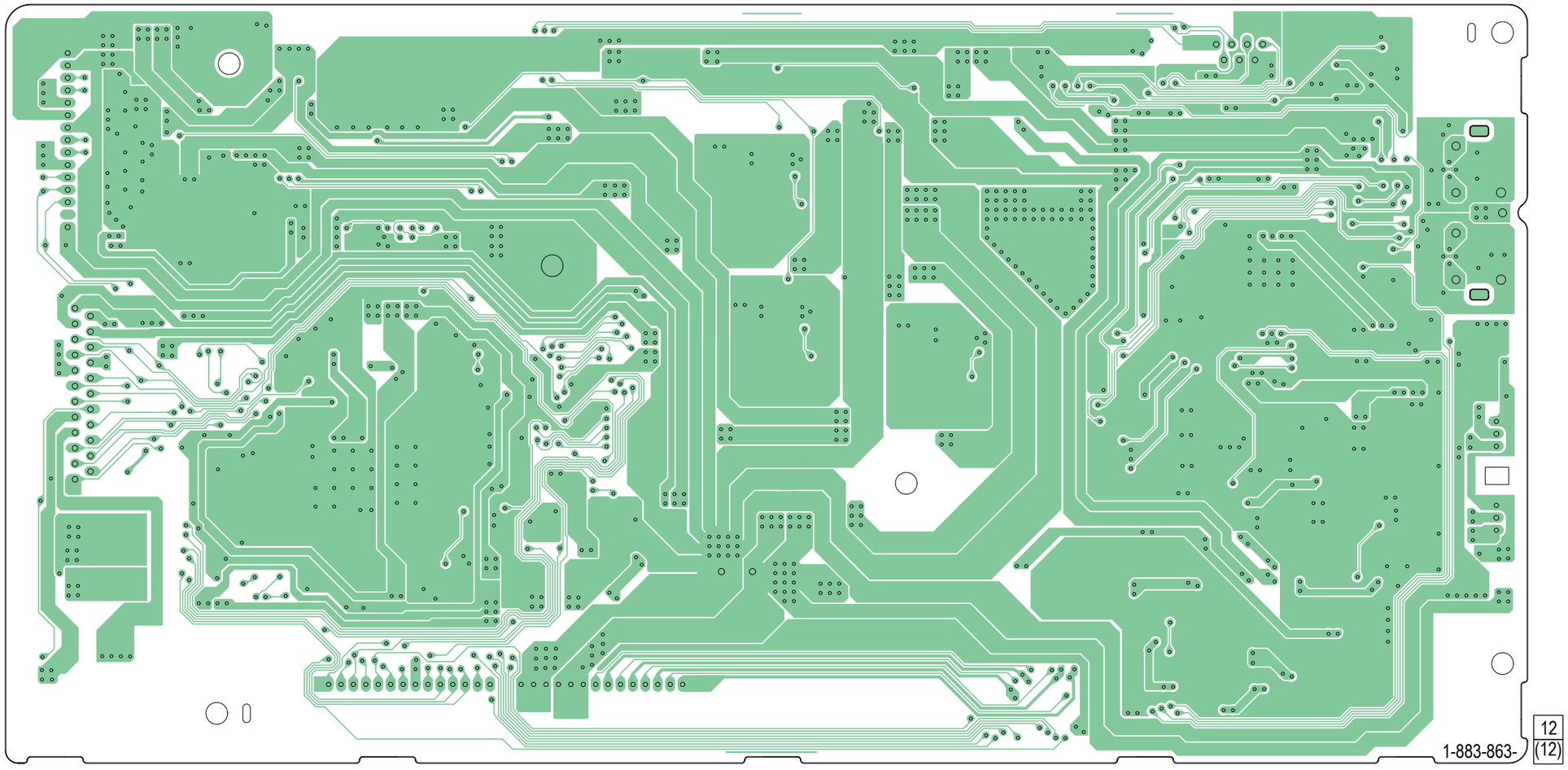


**Note:** Refer to the servicing notes "MAIN BOARD DISCRIMINATION" (page 5) for how to distinguish SUFFIX-11 and SUFFIX-12.

5-9. SCHEMATIC DIAGRAM – MAIN BOARD (1/4) (Suffix 11) – • See page 53 for Waveforms. • See page 61 for IC Pin Function Descriptions.

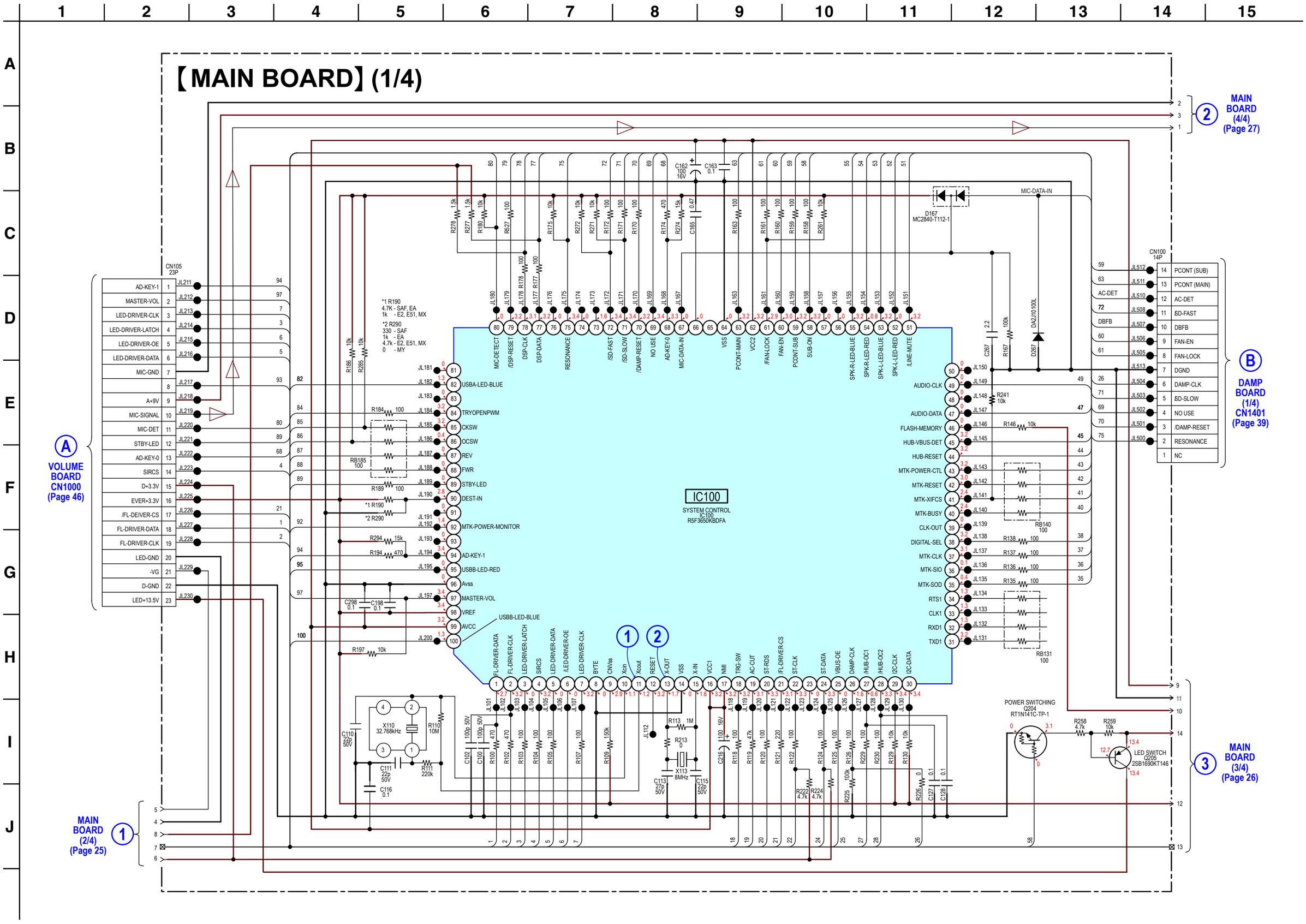

## 5-10. SCHEMATIC DIAGRAM – MAIN BOARD (2/4) (Suffix 11) –

• See page 53 for Waveforms. • See page 54 for IC Block Diagrams.

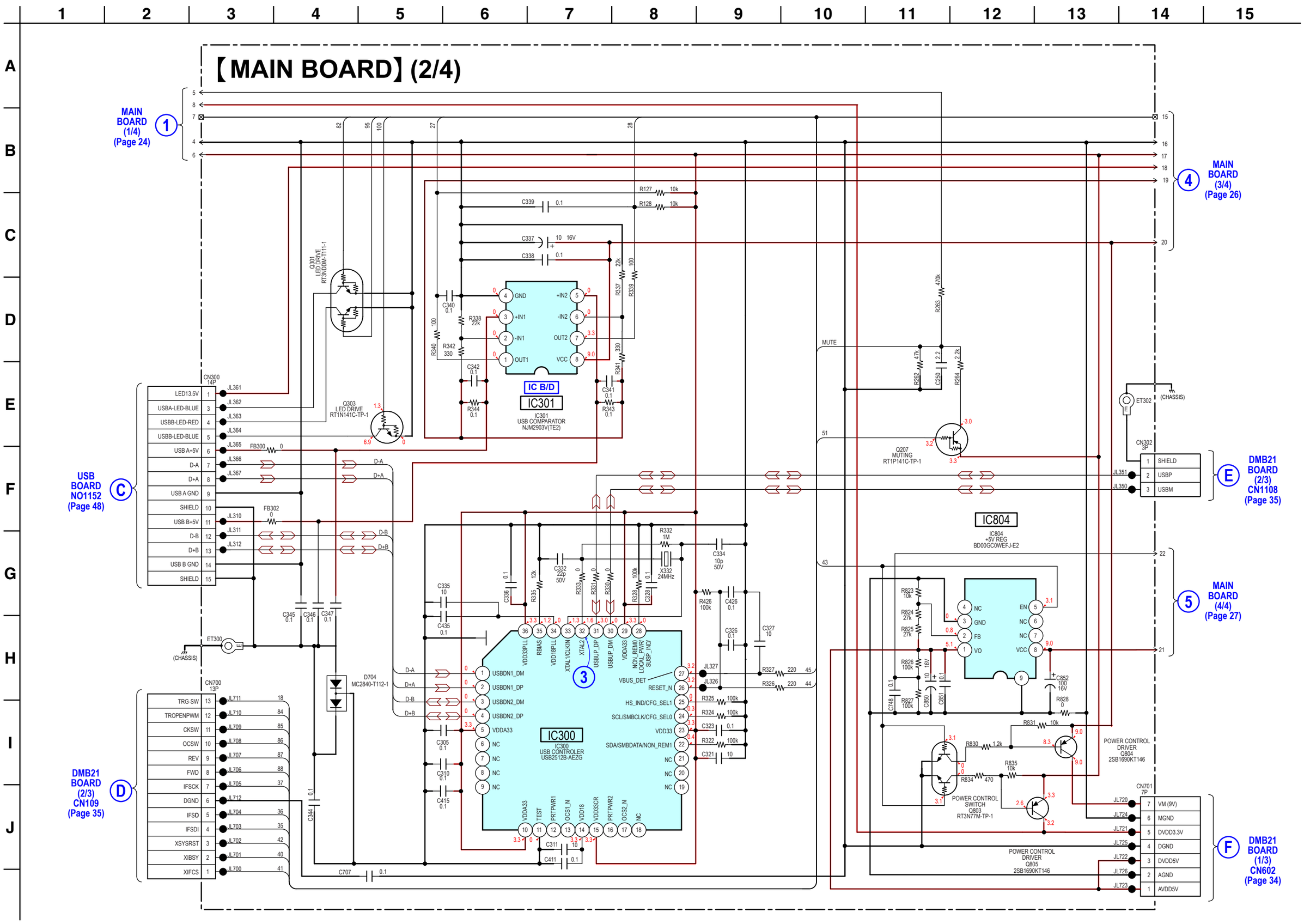

## 5-11. SCHEMATIC DIAGRAM – MAIN BOARD (3/4) (Suffix 11) –

• See page 54 for IC Block Diagrams.

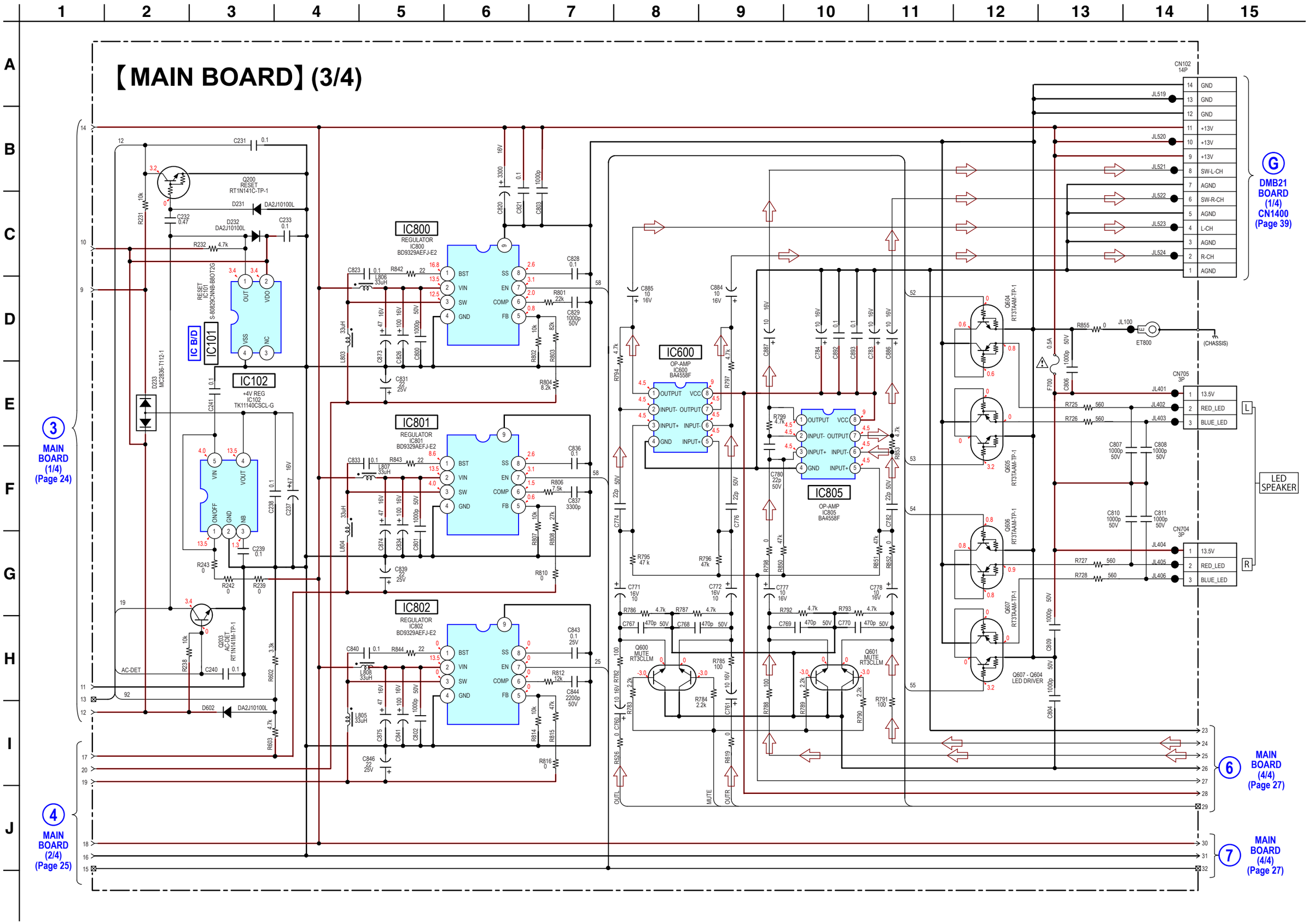

## 5-12. SCHEMATIC DIAGRAM – MAIN BOARD (4/4) (Suffix 11) –

• See page 54 for IC Block Diagrams.

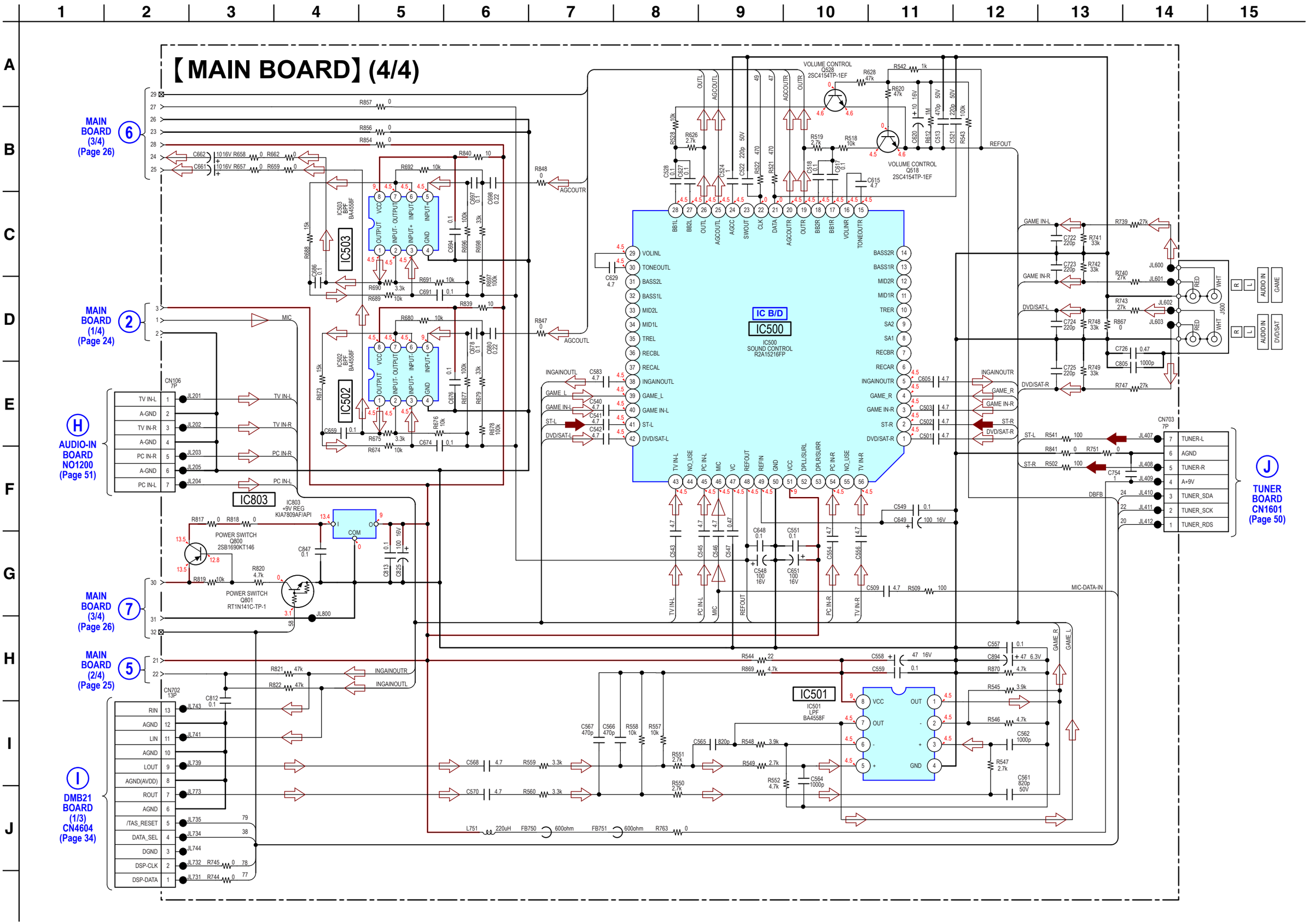

## 5-13. SCHEMATIC DIAGRAM – MAIN BOARD (1/4) (Suffix 12) –

• See page 53 for Waveforms. • See page 61 for IC Pin Function Descriptions.

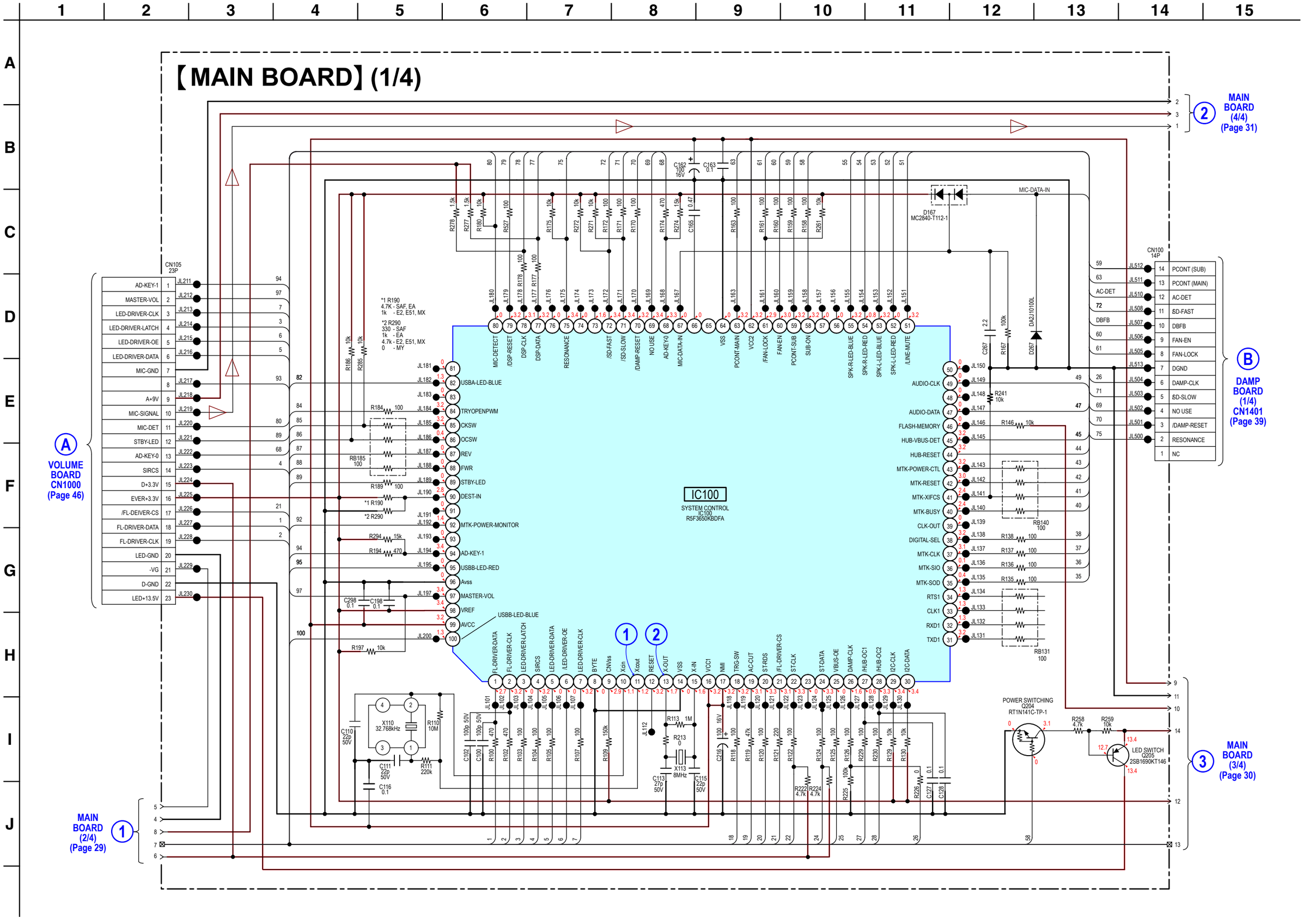

## 5-14. SCHEMATIC DIAGRAM – MAIN BOARD (2/4) (Suffix 12) –

• See page 53 for Waveforms. • See page 54 for IC Block Diagrams.

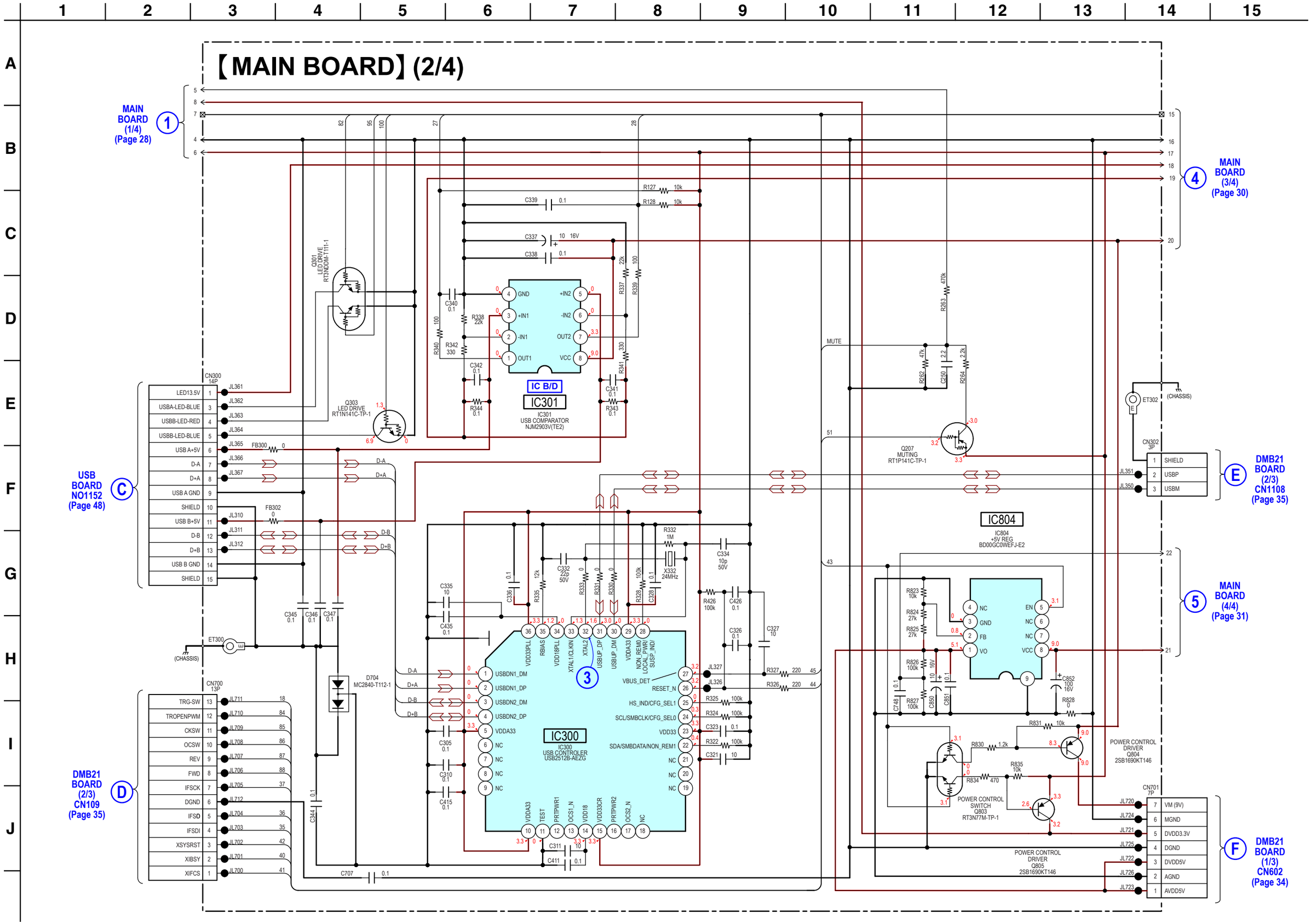

## 5-15. SCHEMATIC DIAGRAM – MAIN BOARD (3/4) (Suffix 12) –

• See page 54 for IC Block Diagrams.

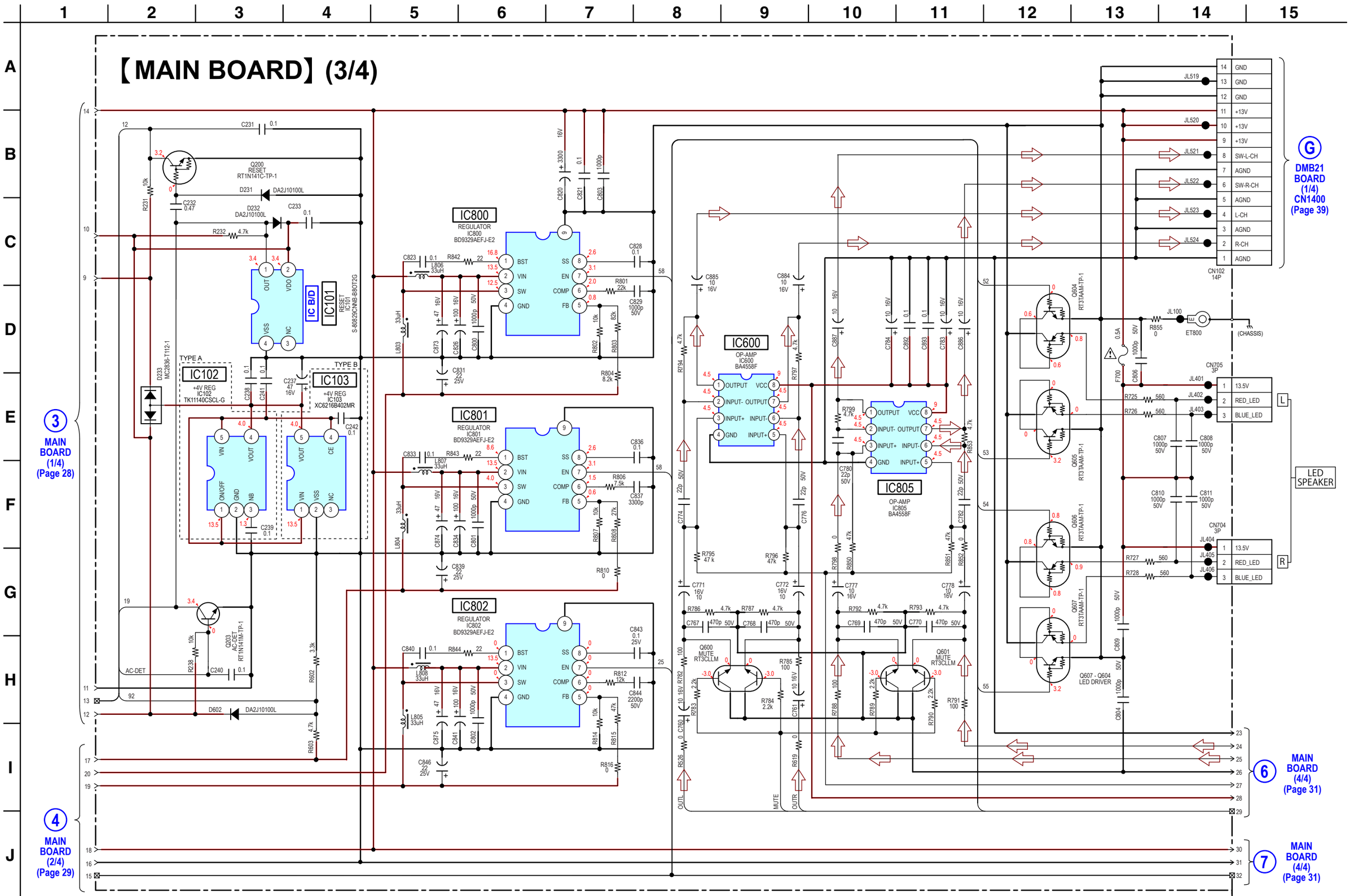


**Note 1:** Refer to the servicing notes "MAIN BOARD DISCRIMINATION" (page 5) for how to distinguish SUFFIX-11 and SUFFIX-12.

**Note 2:** A part of circuit composition of MAIN board (Suffix-12) has been changed in the midway of production. MAIN board (Suffix-12) that has not been changed appears as TYPE A, and the changed MAIN board (Suffix-12) appears as TYPE B.

**Note 3:** IC103 and C242 (Combination: TYPE B) on the MAIN board (Suffix-12) cannot exchange with single. When these parts on the MAIN board (Suffix-12) are damaged, remove IC103 and C242 (Combination: TYPE B) and replace with IC102 and C239 (Combination: TYPE A).

## 5-16. SCHEMATIC DIAGRAM – MAIN BOARD (4/4) (Suffix 12) –

• See page 54 for IC Block Diagrams.

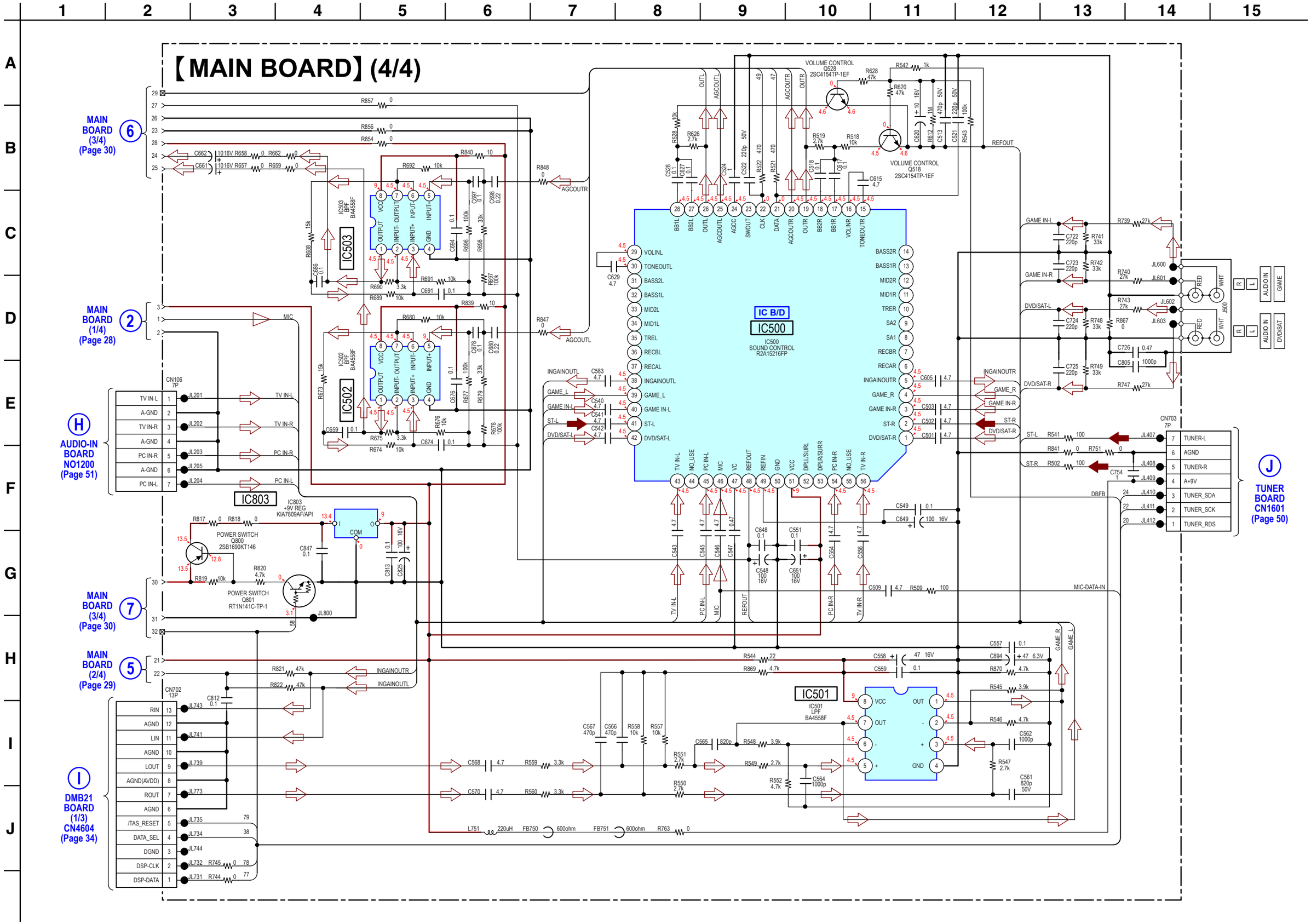

## 5-17. PRINTED WIRING BOARDS – DMB21 BOARD (Component Side) –

• See page 14 for Circuit Boards Location. • : Uses unleaded solder.

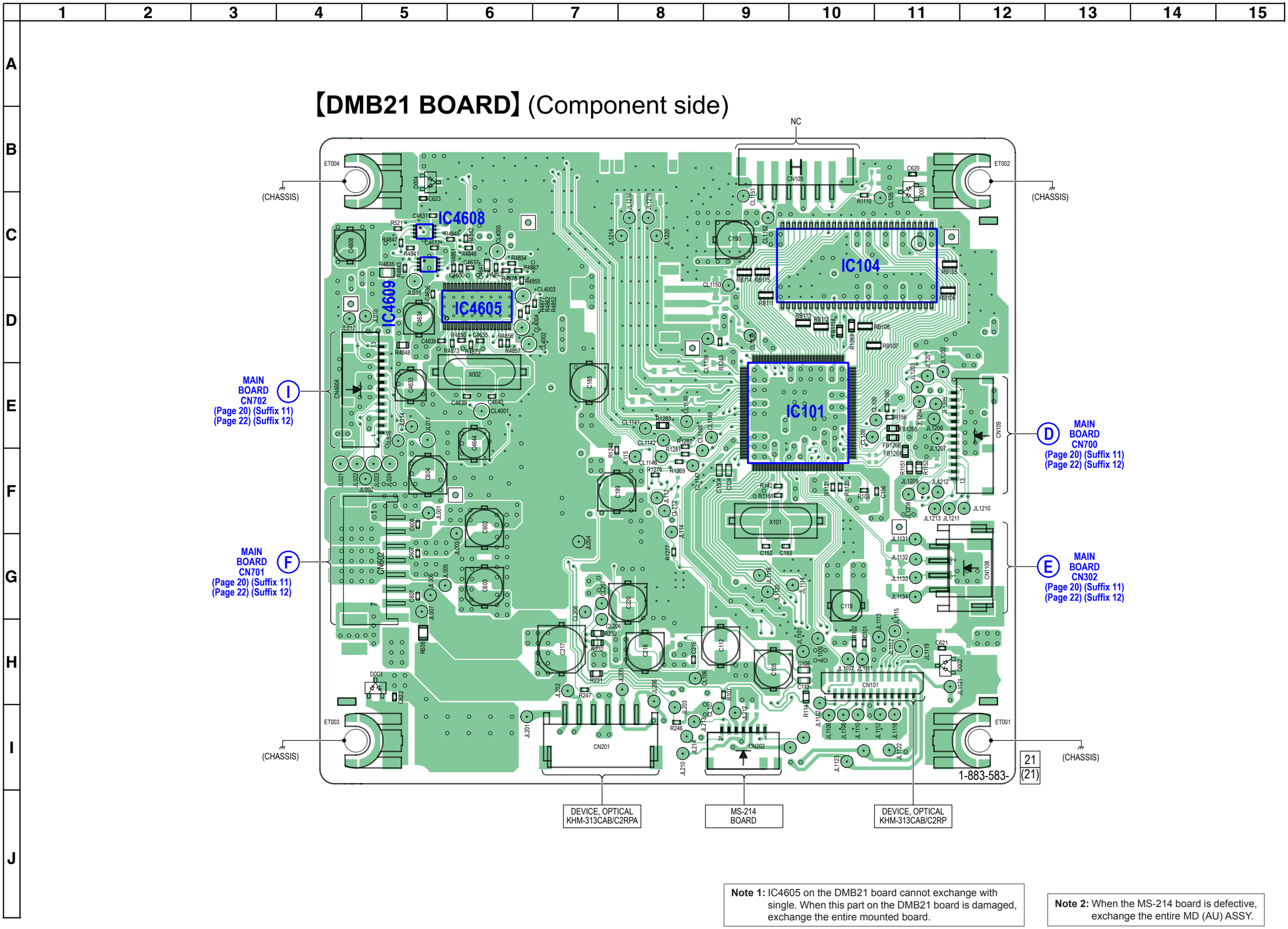


**Note 1:** IC4605 on the DMB21 board cannot exchange with single. When this part on the DMB21 board is damaged, exchange the entire mounted board.

**Note 2:** When the MS-214 board is defective, exchange the entire MD (AU) ASSY.

## 5-18. PRINTED WIRING BOARDS – DMB21 BOARD (Conductor Side) –

• See page 14 for Circuit Boards Location. • : Uses unleaded solder.

# 【DMB21 BOARD】(Conductor side)

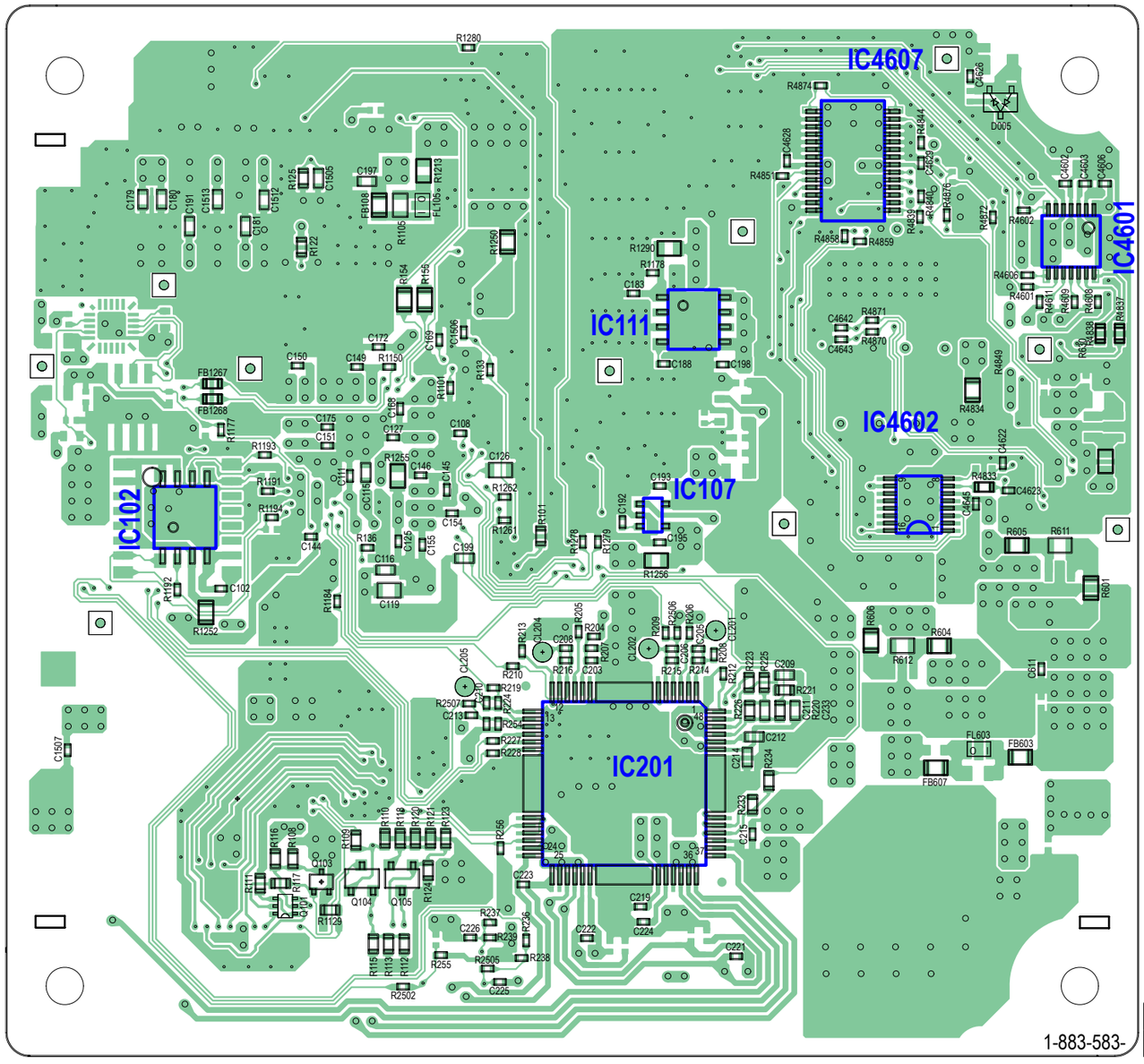


**Note:** IC102 on the DMB21 board cannot exchange with single. When this part on the DMB21 board is damaged, exchange the entire mounted board.

## 5-19. SCHEMATIC DIAGRAM – DMB21 BOARD (1/3) –

• See page 53 for Waveforms. • See page 54 for IC Block Diagrams.

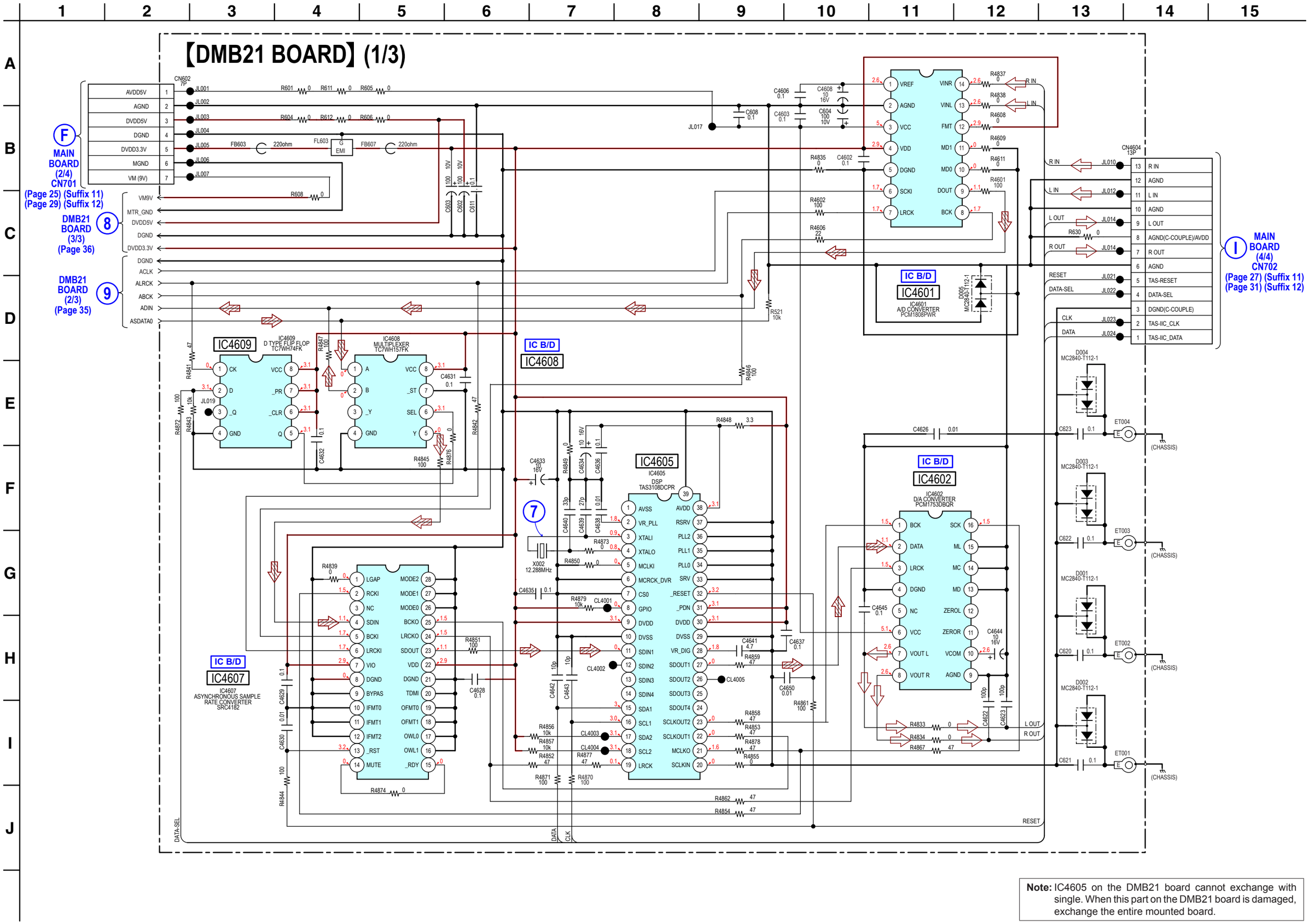


**Note:** IC4605 on the DMB21 board cannot exchange with single. When this part on the DMB21 board is damaged, exchange the entire mounted board.

## 5-20. SCHEMATIC DIAGRAM – DMB21 BOARD (2/3) –

• See page 53 for Waveforms. • See page 54 for IC Block Diagrams. • See page 61 for IC Pin Function Descriptions.

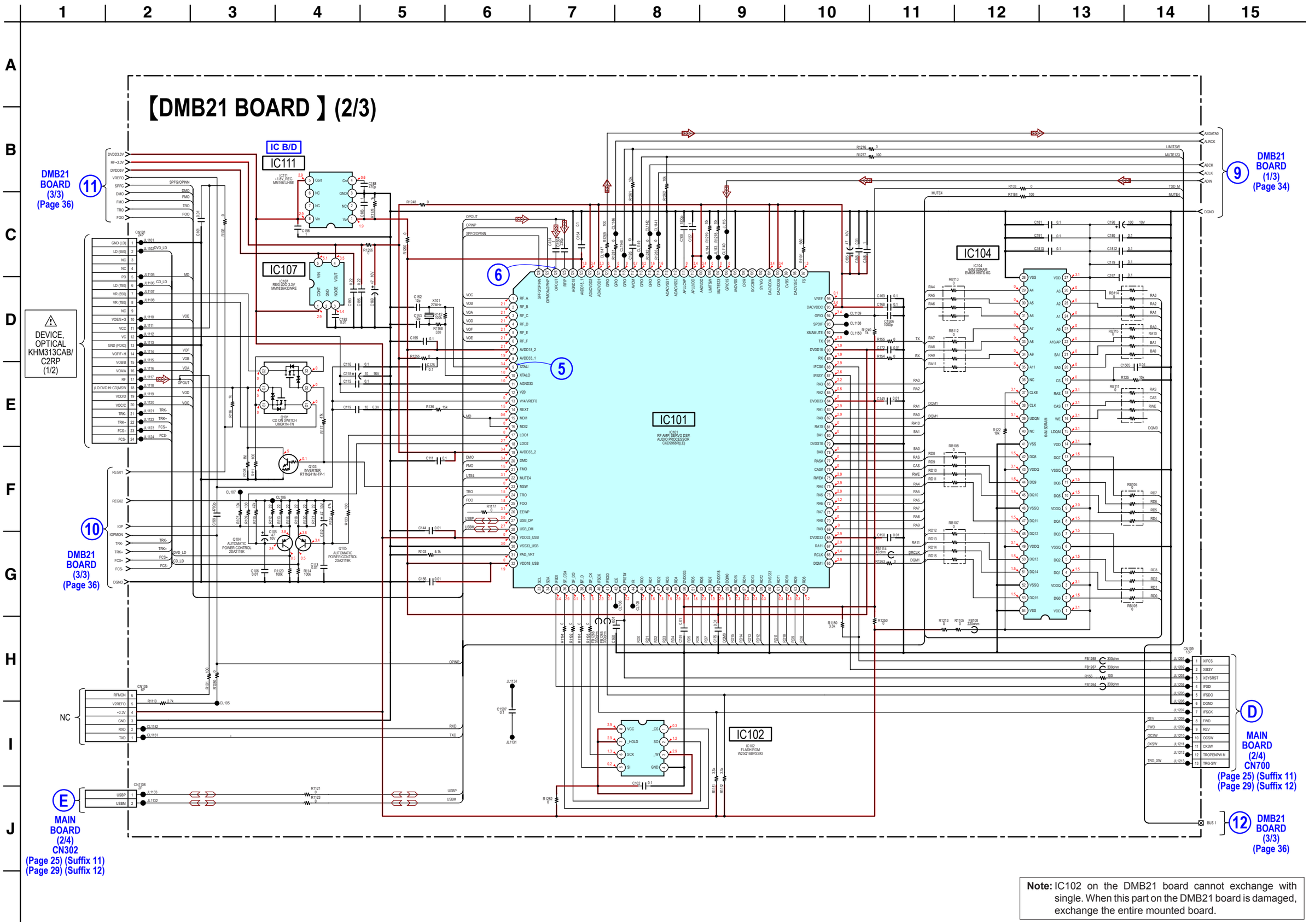


**Note:** IC102 on the DMB21 board cannot exchange with single. When this part on the DMB21 board is damaged, exchange the entire mounted board.

## 5-21. SCHEMATIC DIAGRAM – DMB21 BOARD (3/3) –

• See page 54 for IC Block Diagrams.

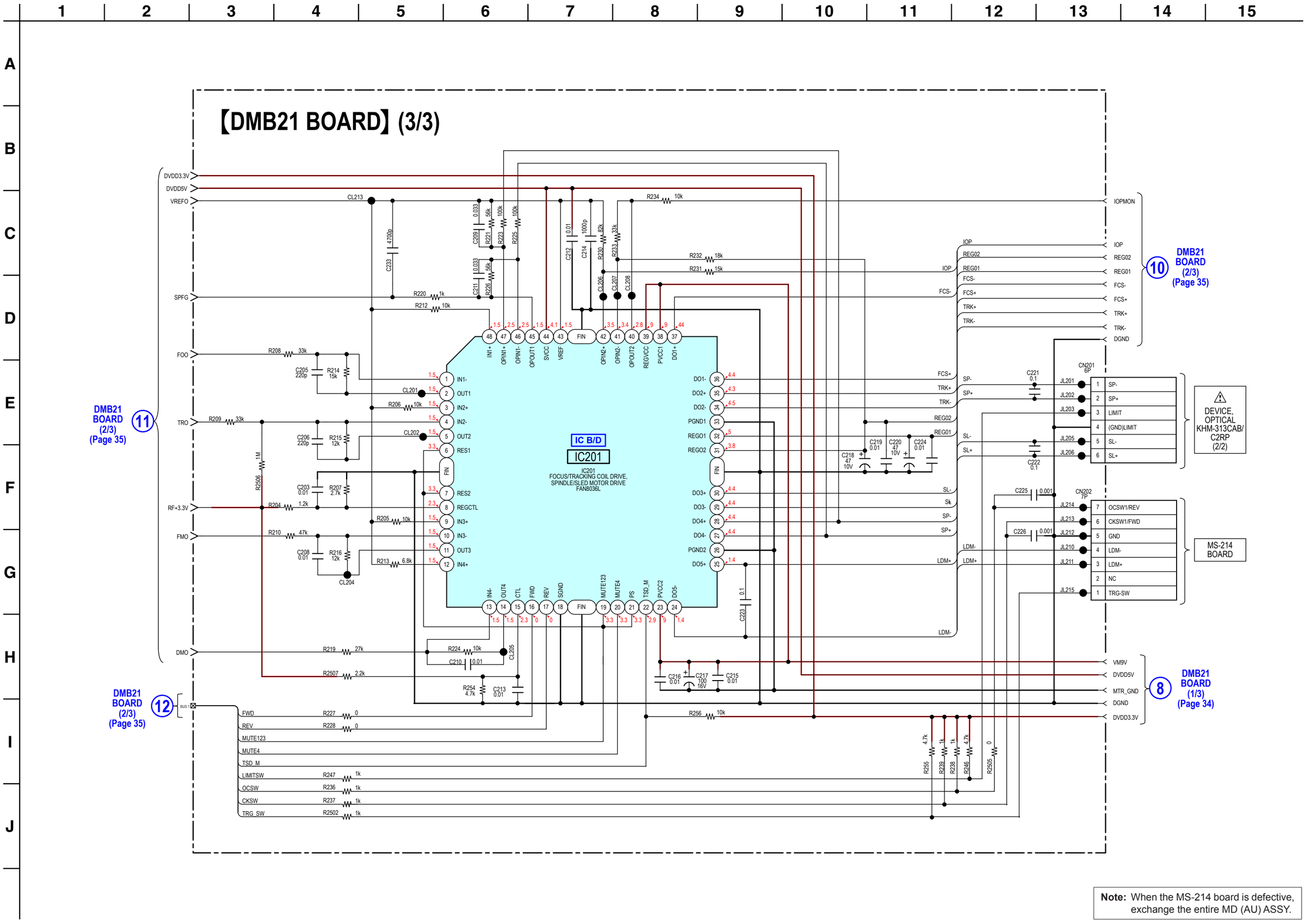


**Note:** When the MS-214 board is defective, exchange the entire MD (AU) ASSY.

## 5-22. PRINTED WIRING BOARDS – DAMP BOARD (Component Side) –

• See page 14 for Circuit Boards Location. • : Uses unleaded solder.

# 【DAMP BOARD】(Component side)

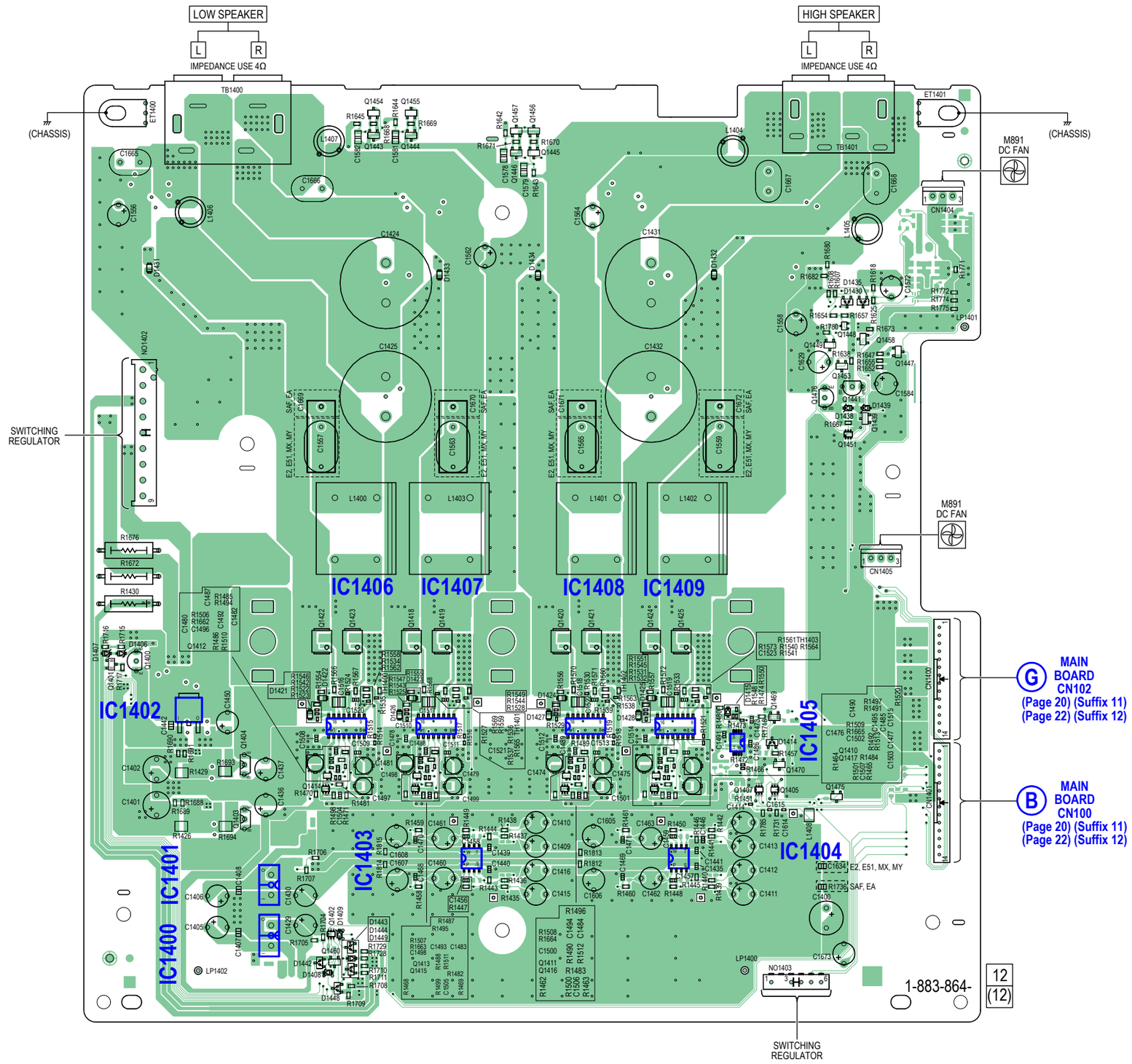

5-23. PRINTED WIRING BOARDS – DAMP BOARD (Conductor Side) – • See page 14 for Circuit Boards Location. • : Uses unleaded solder.

## 【DAMP BOARD】(Conductor side)

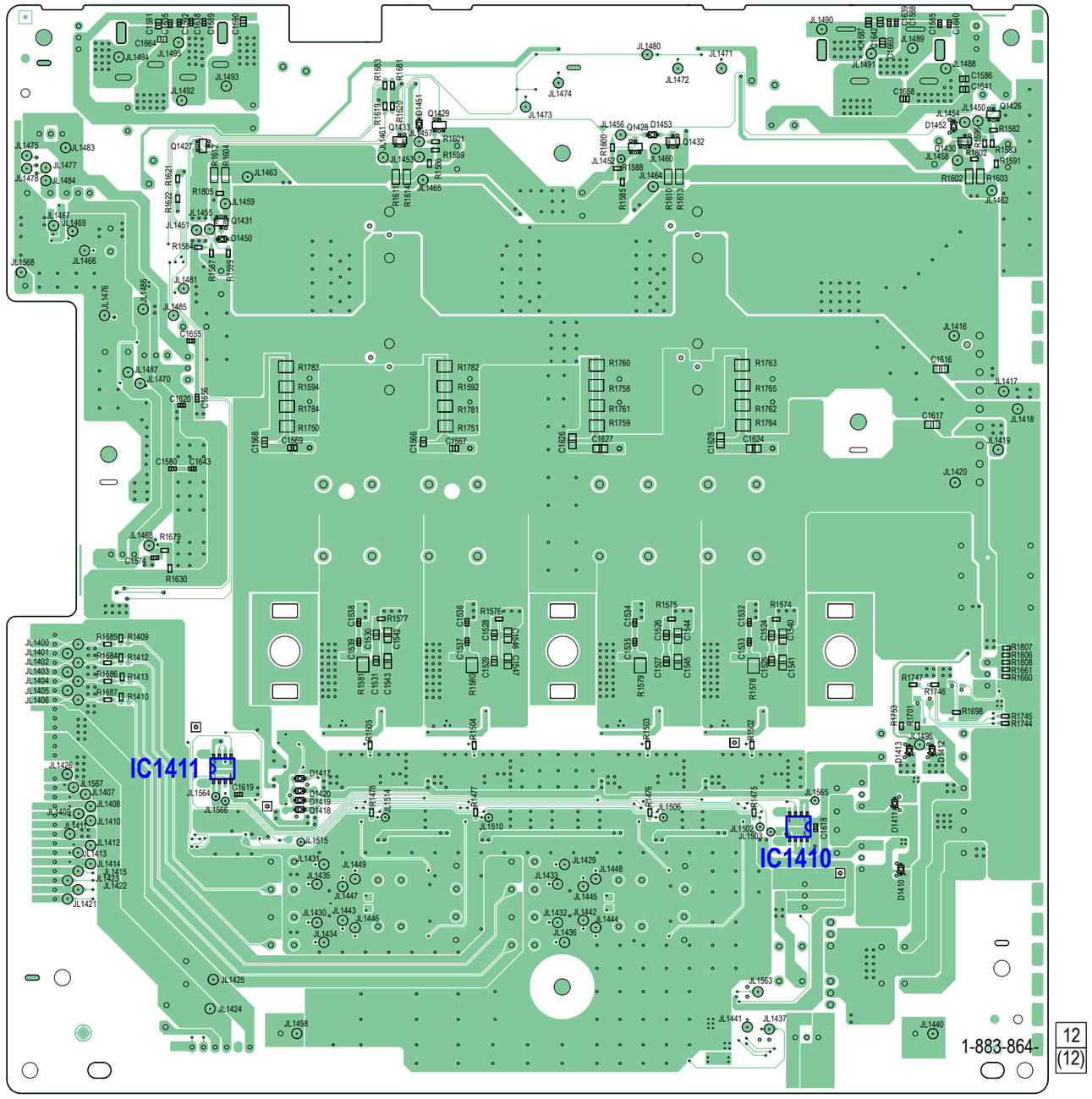

## 5-24. SCHEMATIC DIAGRAM – DAMP BOARD (1/4) –

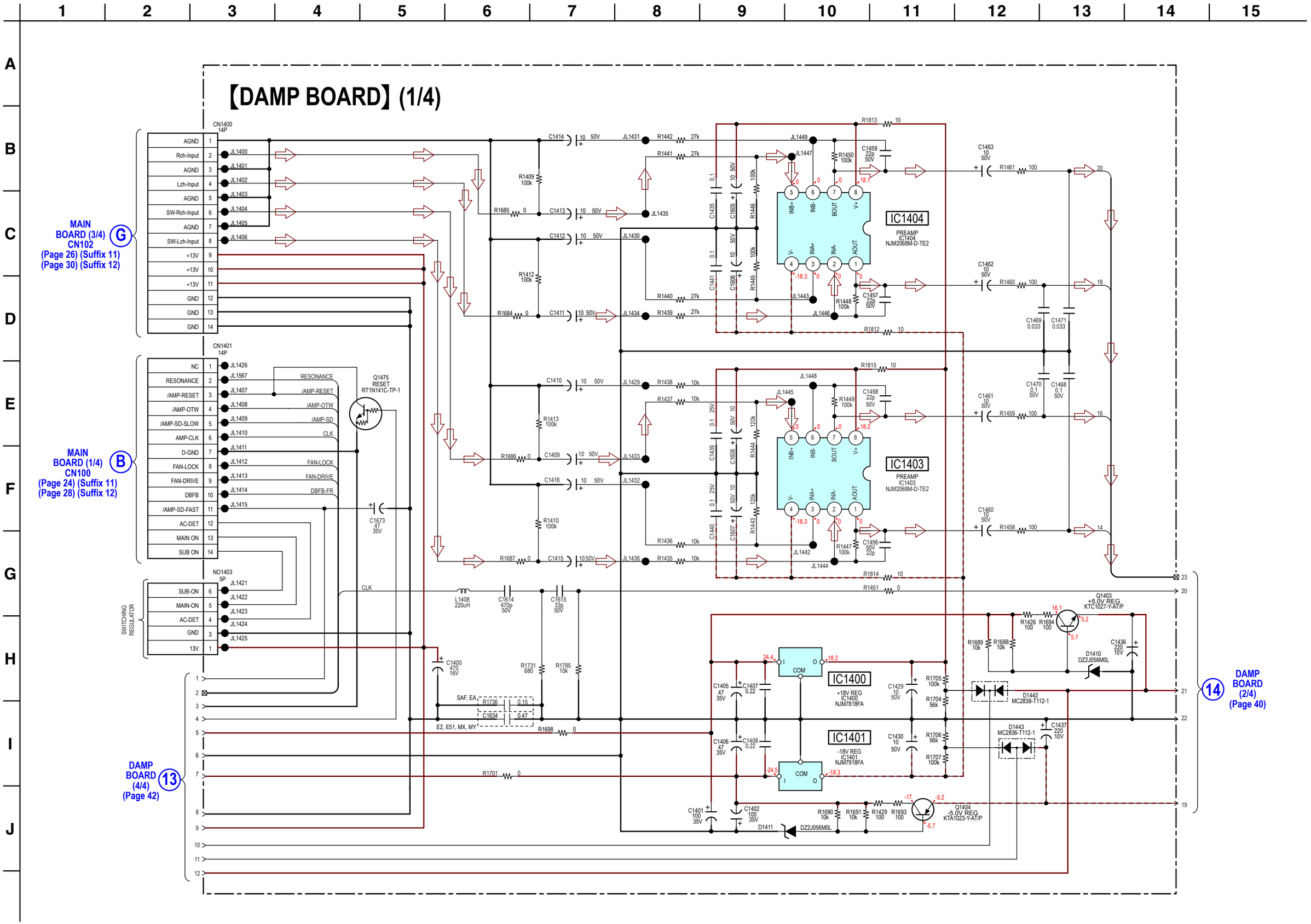

## 5-25. SCHEMATIC DIAGRAM – DAMP BOARD (2/4) –

• See page 54 for IC Block Diagrams.

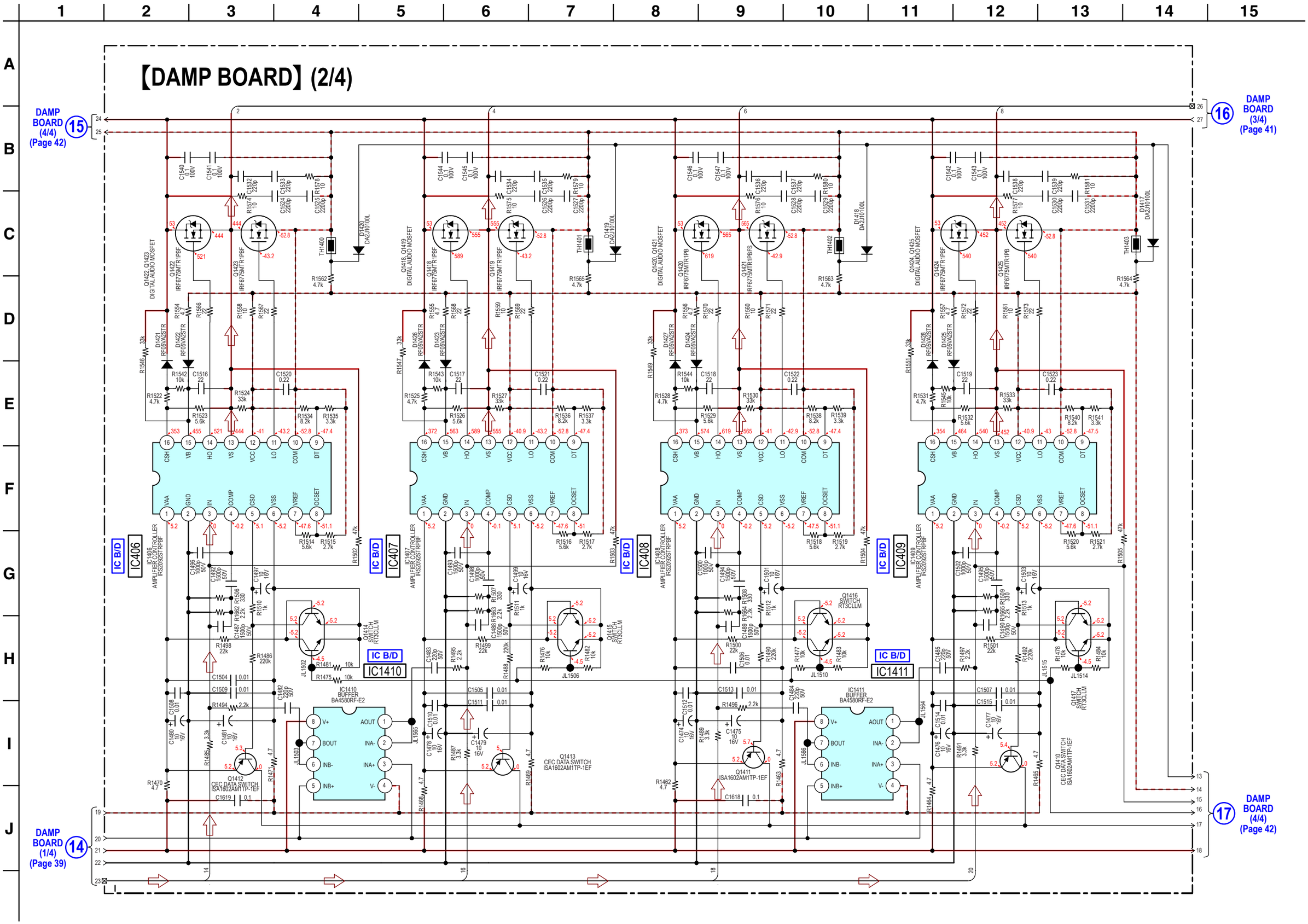

## 5-26. SCHEMATIC DIAGRAM – DAMP BOARD (3/4) –

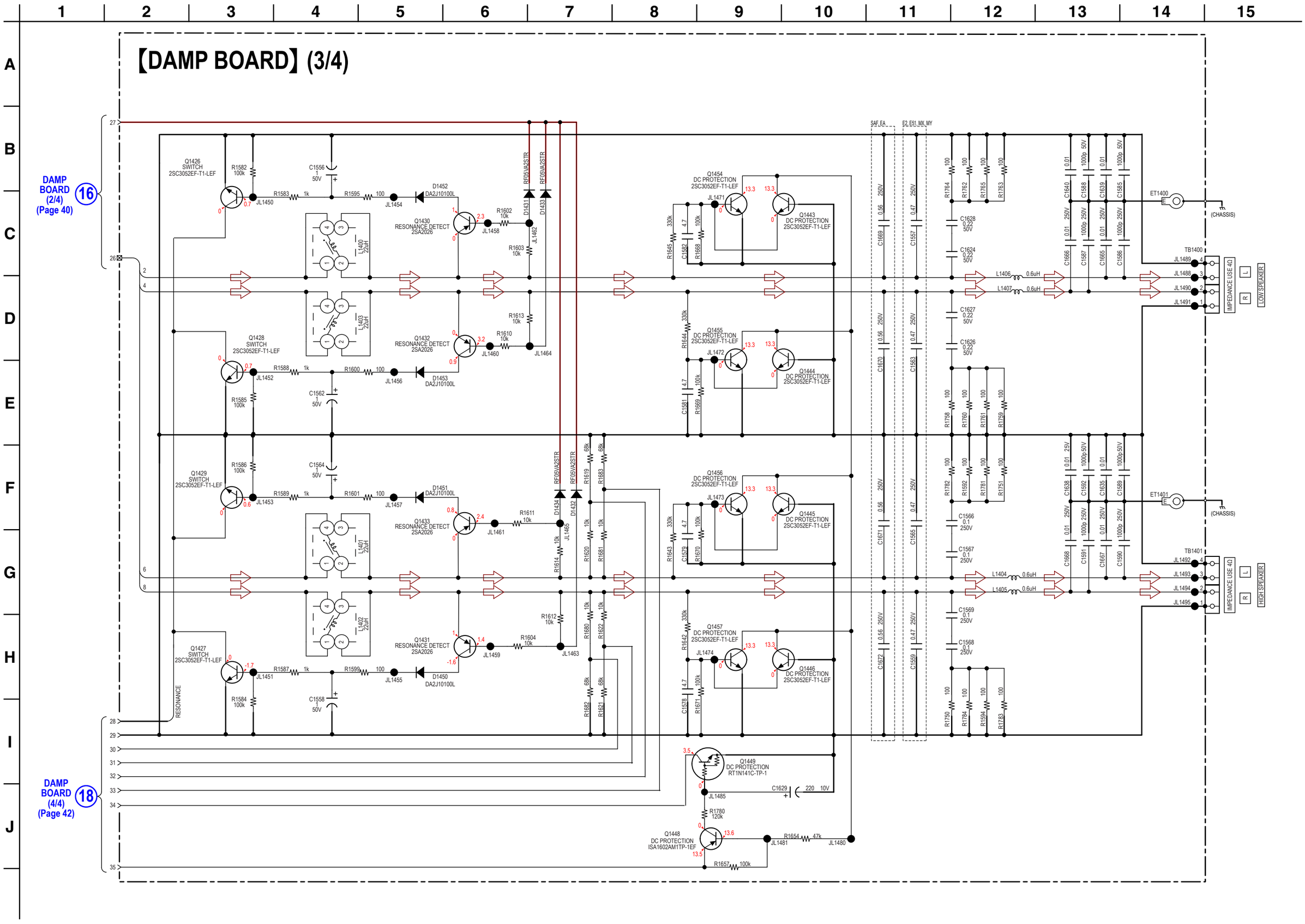

## 5-27. SCHEMATIC DIAGRAM – DAMP BOARD (4/4) –

• See page 54 for IC Block Diagrams.

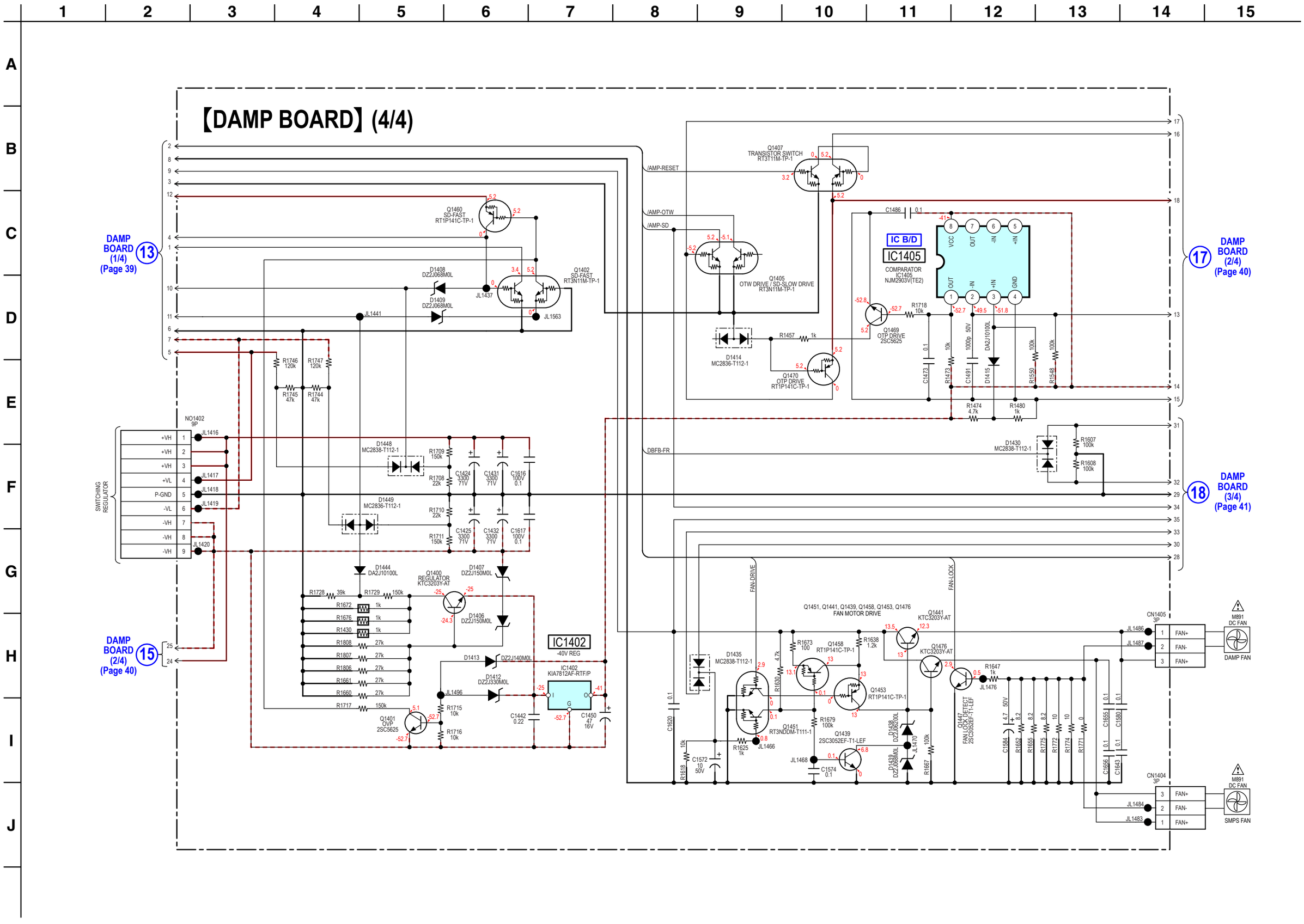

## 5-28. PRINTED WIRING BOARDS – DISPLAY BOARD –

• See page 14 for Circuit Boards Location. • : Uses unleaded solder.

# 【DISPLAY BOARD】

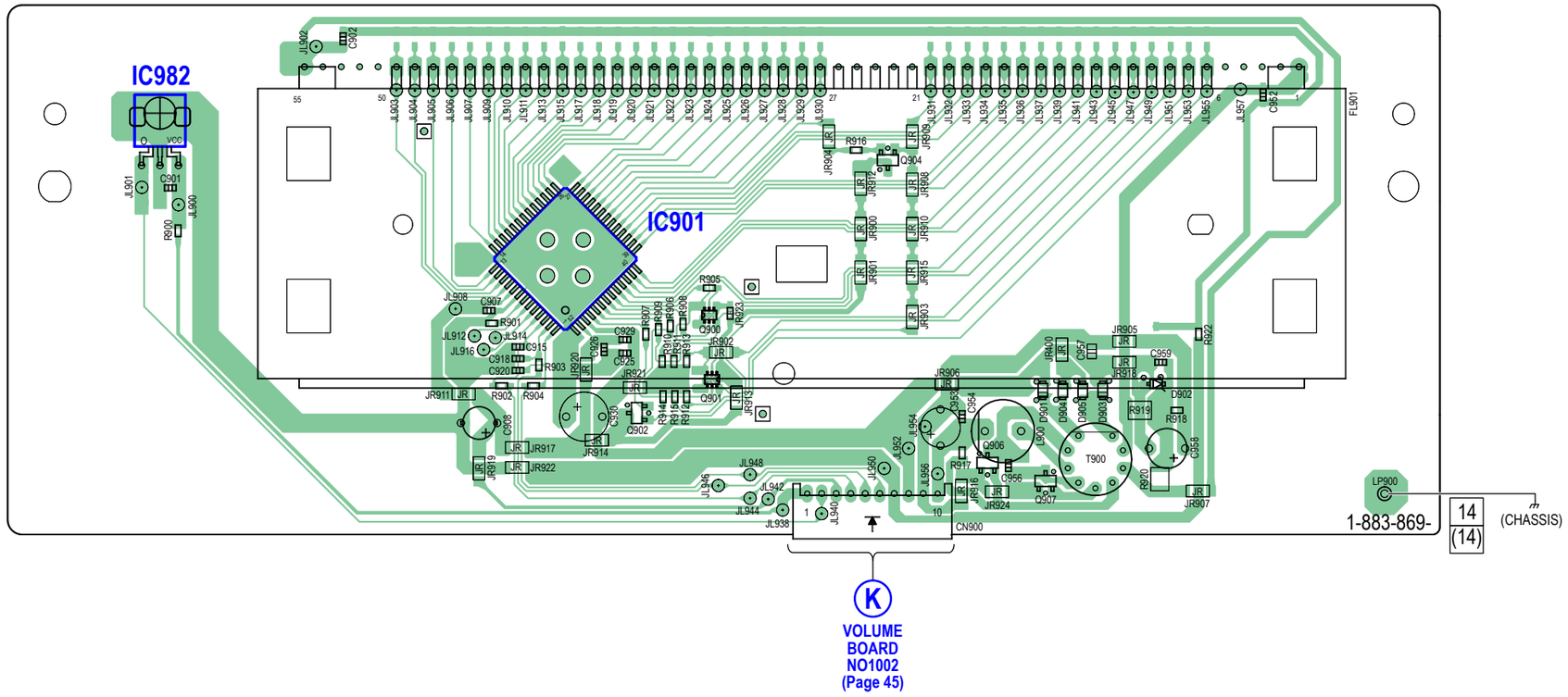

## 5-29. SCHEMATIC DIAGRAM – DISPLAY BOARD –

• See page 54 for IC Block Diagrams.

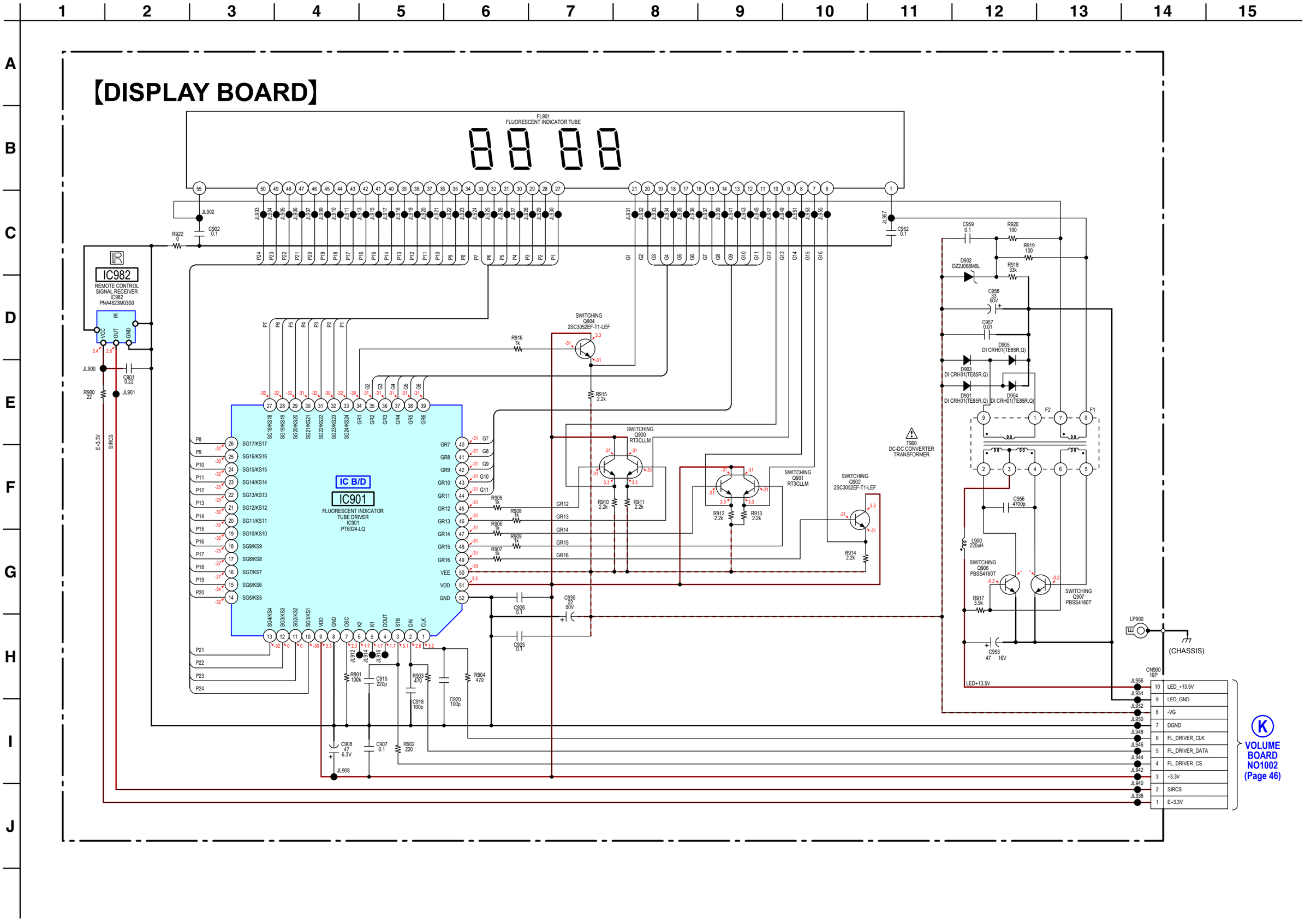

## 5-30. PRINTED WIRING BOARDS – VOLUME BOARD –

• See page 14 for Circuit Boards Location. • : Uses unleaded solder.

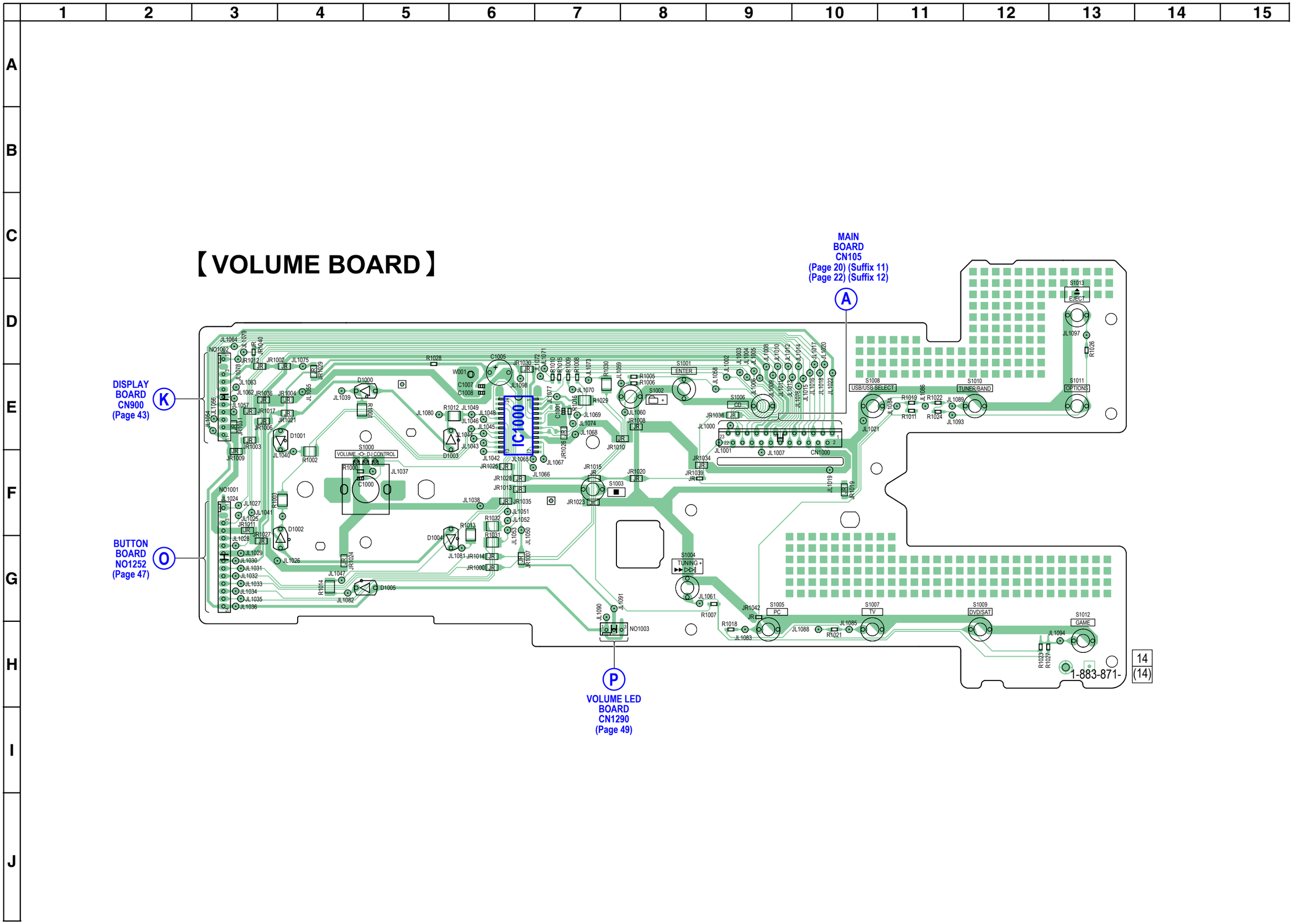

## 5-31. SCHEMATIC DIAGRAM – VOLUME BOARD –

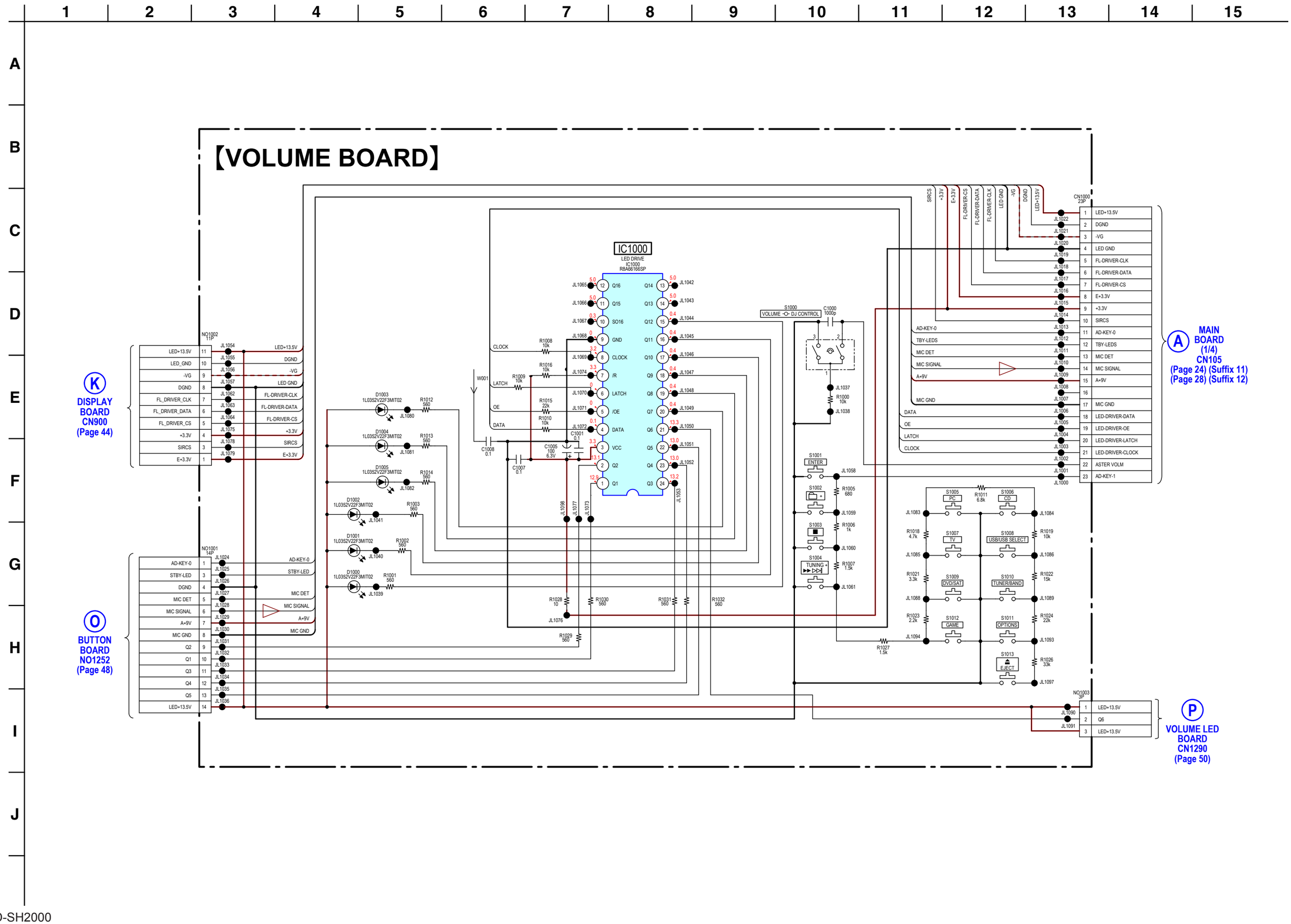

## 5-32. PRINTED WIRING BOARDS – BUTTON, USB BOARD –

• See page 14 for Circuit Boards Location. • : Uses unleaded solder.

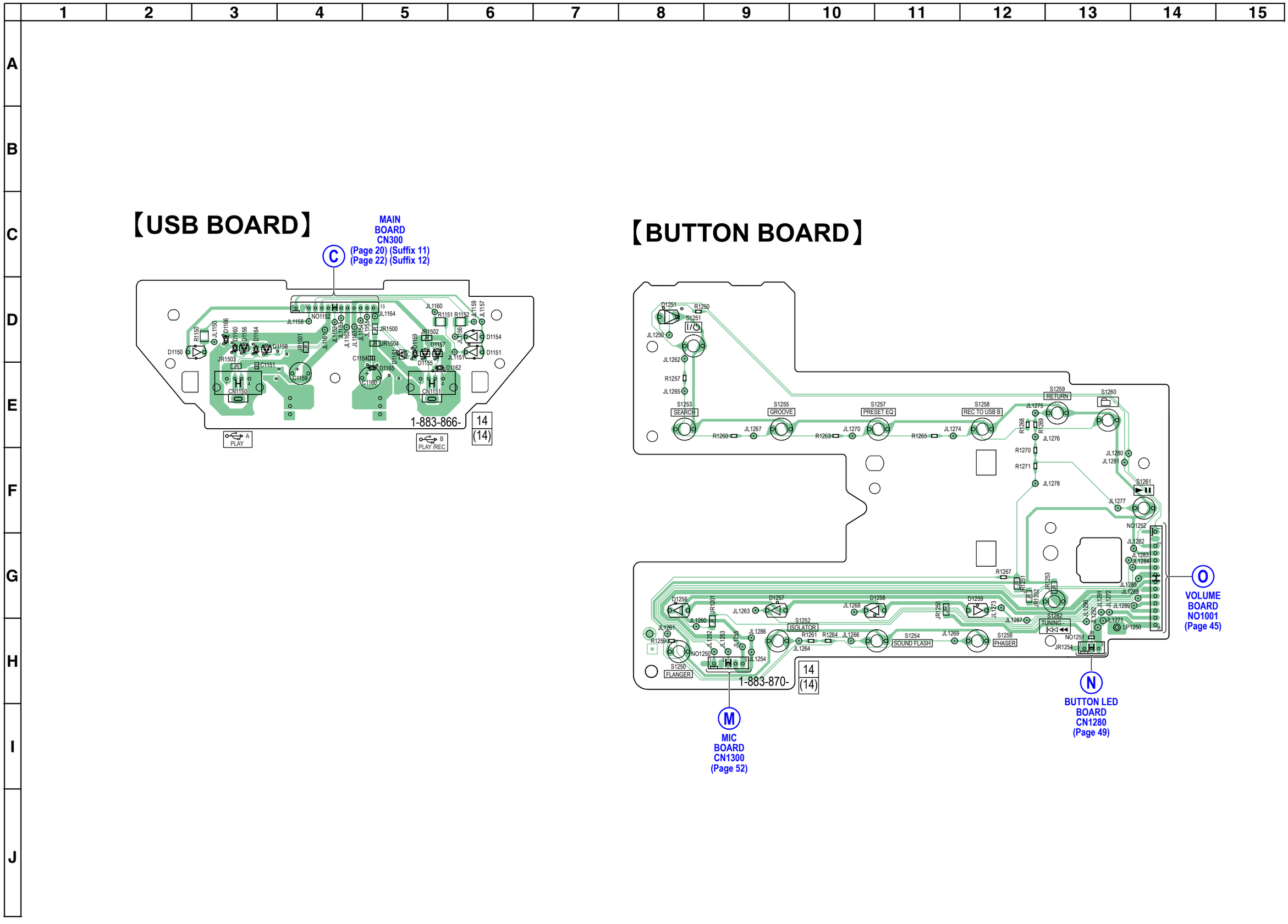

## 5-33. SCHEMATIC DIAGRAM – BUTTON, USB BOARD –

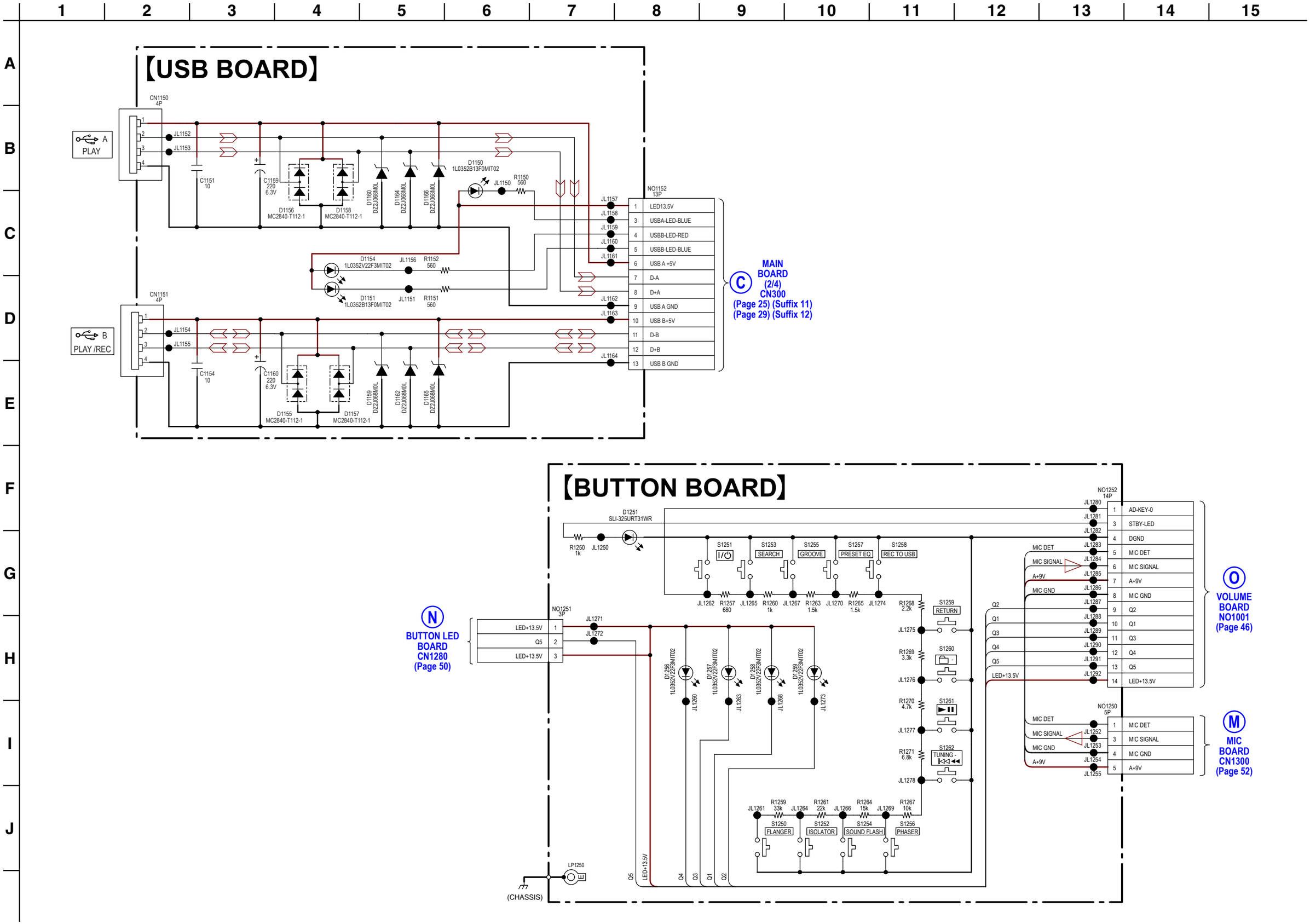

## 5-34. PRINTED WIRING BOARDS – VOLUME LED, BUTTON LED AND TUNER BOARD –

• See page 14 for Circuit Boards Location. • : Uses unleaded solder.

### 【TUNER BOARD】(Component side)

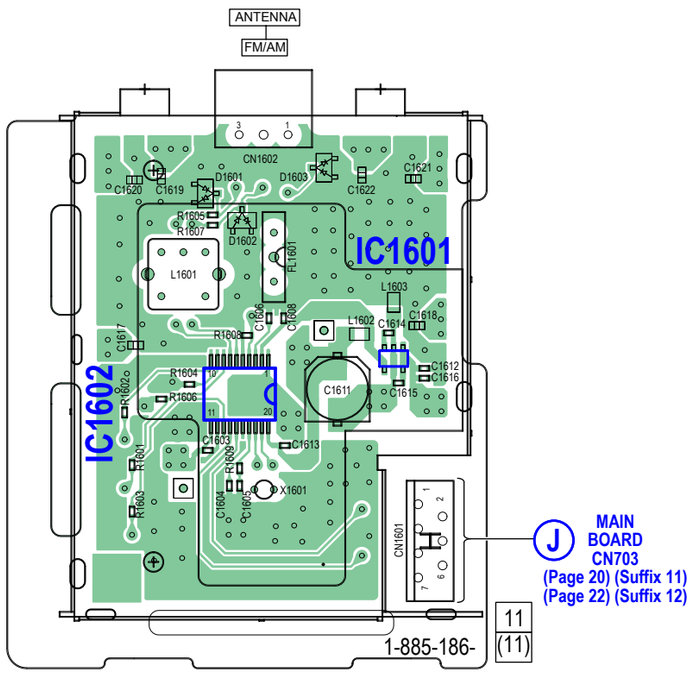


### 【TUNER BOARD】(Conductor side)

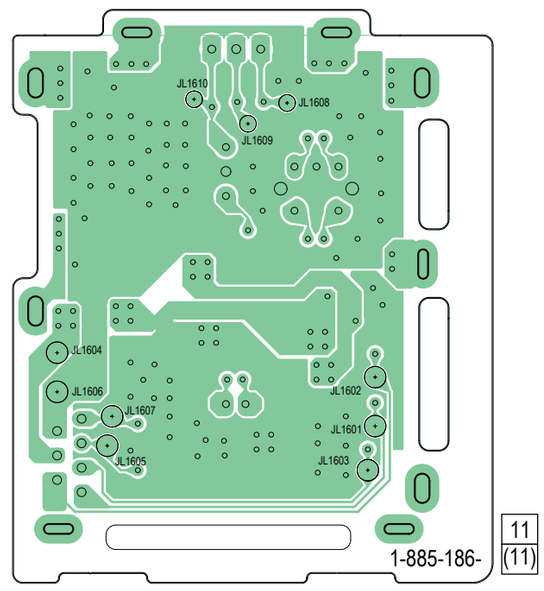


### 【VOLUME LED BOARD】

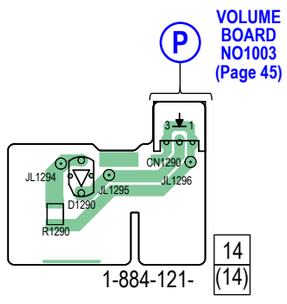


### 【BUTTON LED BOARD】

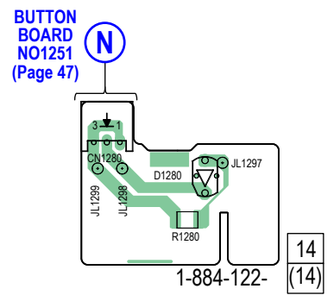

## 5-35. SCHEMATIC DIAGRAM – VOLUME LED, BUTTON LED AND TUNER BOARD –

• See page 53 for Waveforms. • See page 54 for IC Block Diagrams.

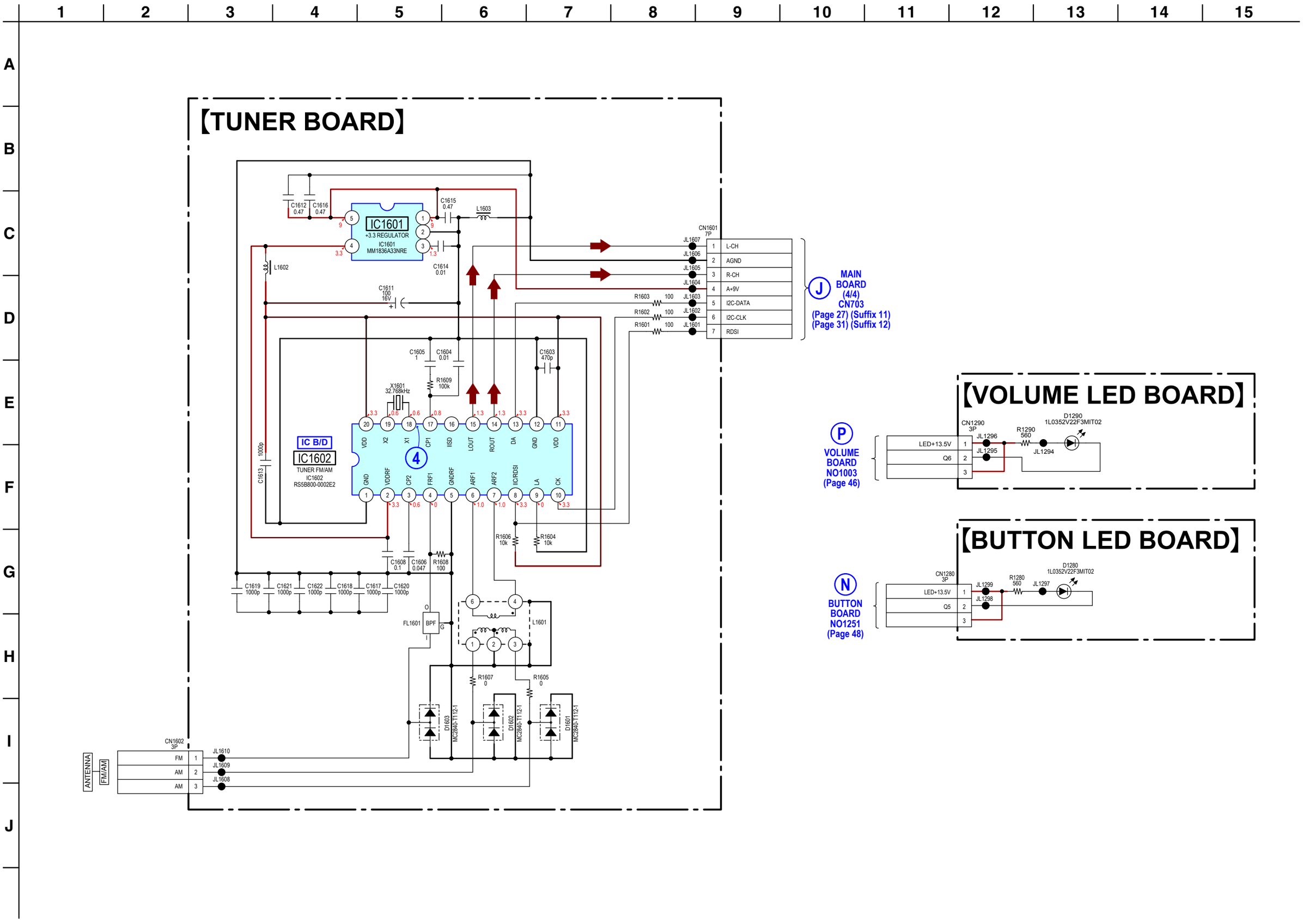

• : Uses unleaded solder.
• See page 14 for Circuit Boards Location.

## 5-36. PRINTED WIRING BOARDS – AUDIO-IN BOARD –

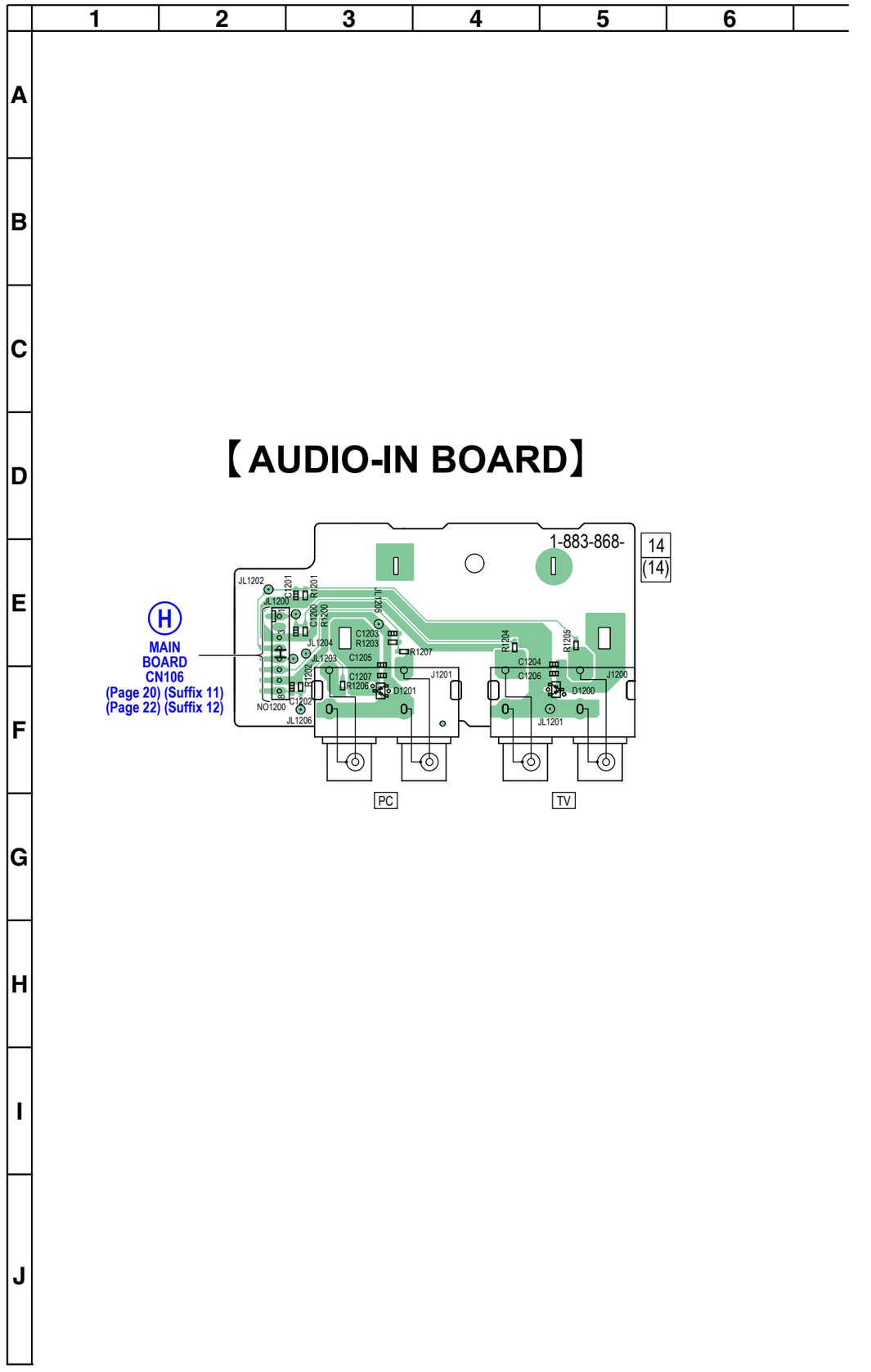


## 5-37. SCHEMATIC DIAGRAM – AUDIO-IN BOARD –

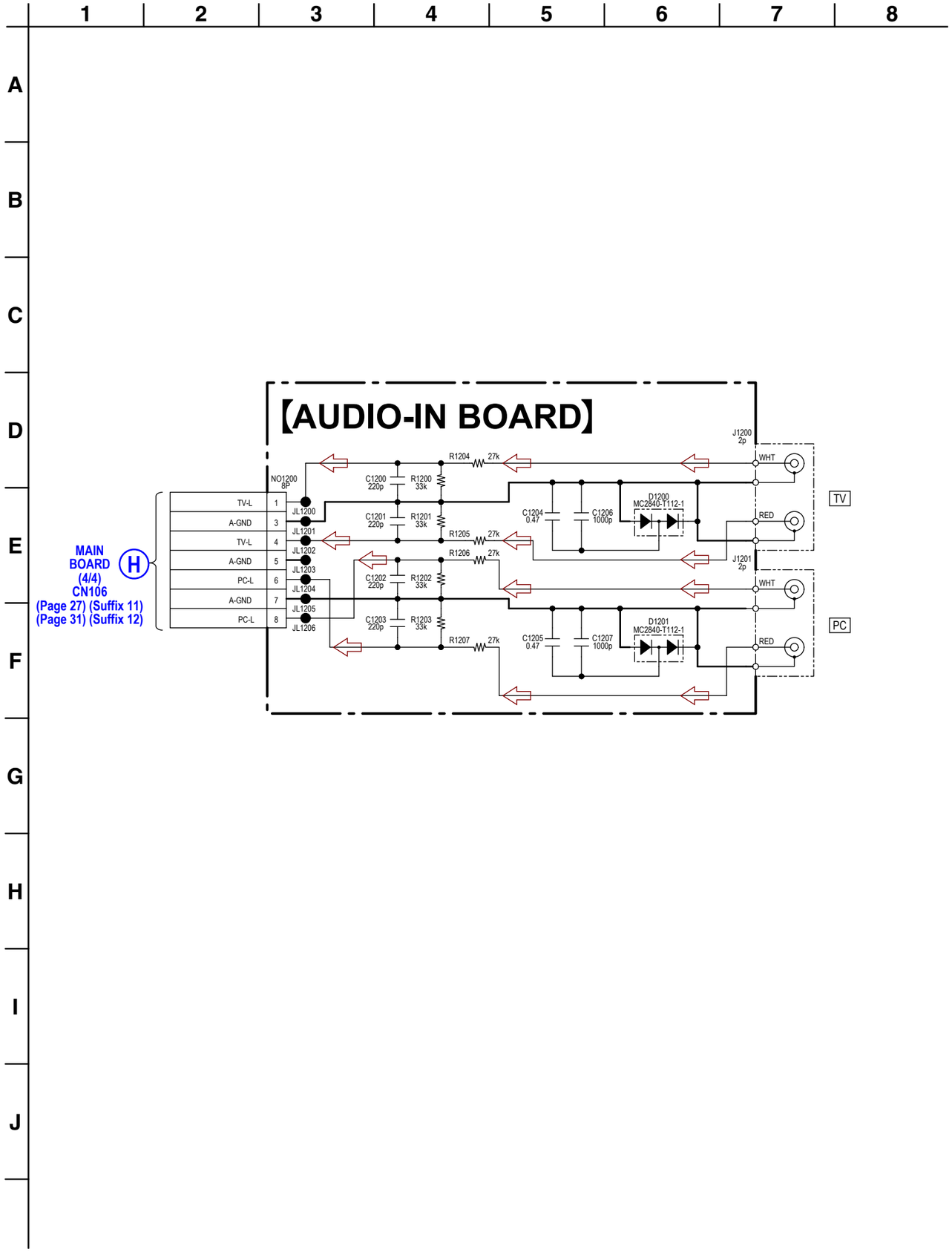

## 5-38. PRINTED WIRING BOARDS – MIC BOARD –

• See page 14 for Circuit Boards Location. • : Uses unleaded solder.

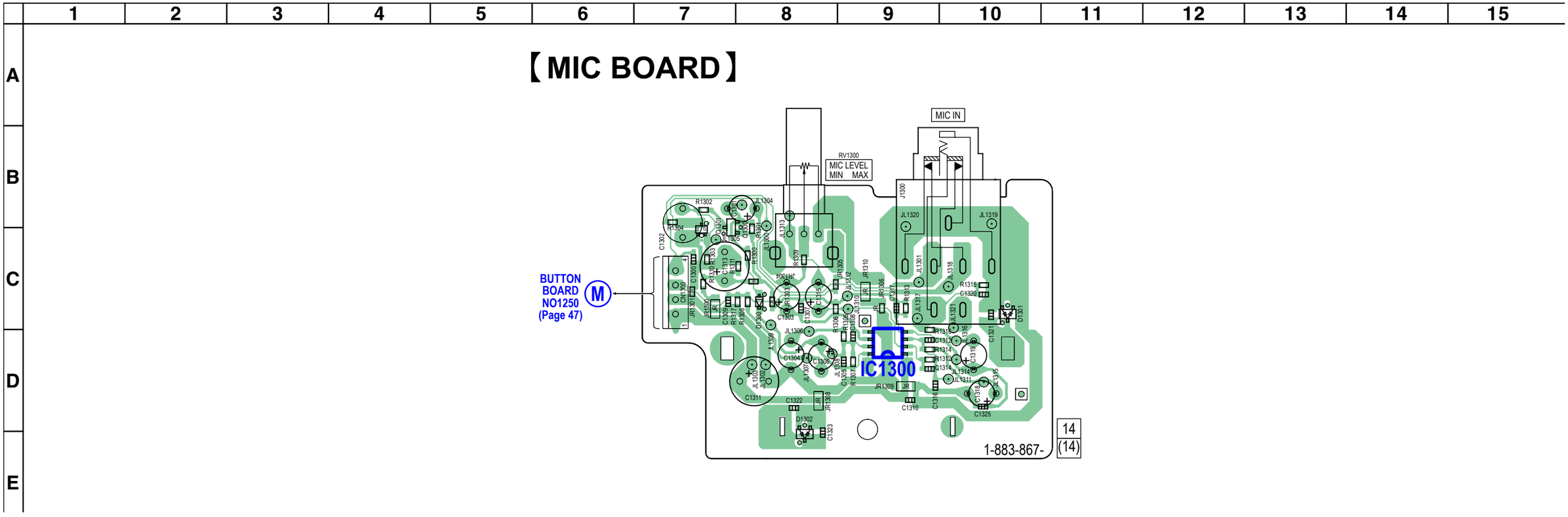


## 5-39. SCHEMATIC DIAGRAM – MIC BOARD –

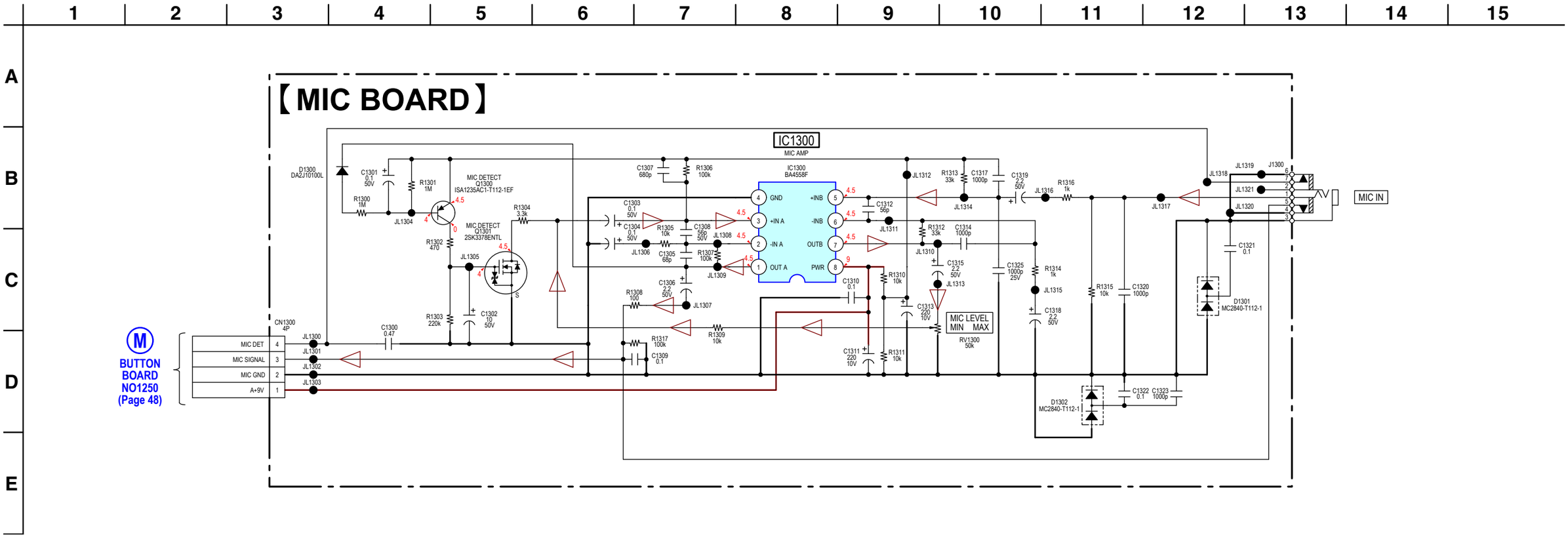

• **Waveforms**

**– DMB21 Board –**

**⑤ IC101 ⑨ (XTALI)**

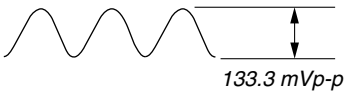


*26.99 MHz*

*125 mV/DIV, 37 nsec/DIV*

**⑥ IC101 ⑯(XTALI)**

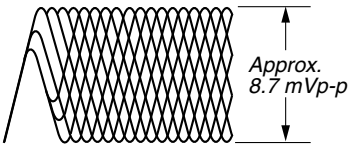


*30.32 MHz*

*5.26 mV/DIV, 4.1 µsec/DIV*

**⑦ IC4605 ③ (XTALI)**

*12.27 MHz*

*170 mV/DIV, 82 nsec/DIV*

**– MAIN Board –**

**① IC100 ⑪ (XC-OUT)**

*87.41 kHz*

*34 mV/DIV, 30 µssec/DIV*

**② IC100 ⑬ (X-OUT)**

*8 MHz*

*280 mV/DIV, 125 nssec/DIV*

**③ IC300 ㉜ (XTAL2)**

*284.4 MHz*

*90 mV/DIV, 23 nssec/DIV*

**– TUNER Board –**

**④ IC1602 ⑱ (X1)**

*32.8 kHz*

*60 mV/DIV, 30 µssec/DIV*

- **IC Block Diagrams**

### IC101 S-80829CNNB-B8OT2G (MAIN BOARD (3/4))

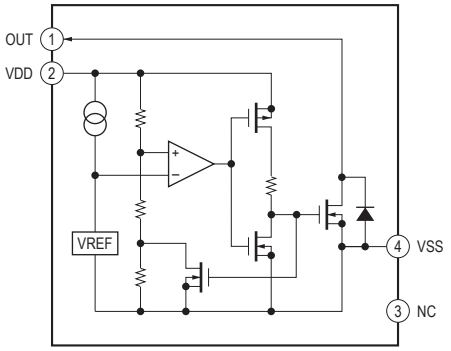


### IC500 R2A15216FP (MAIN BOARD (4/4))

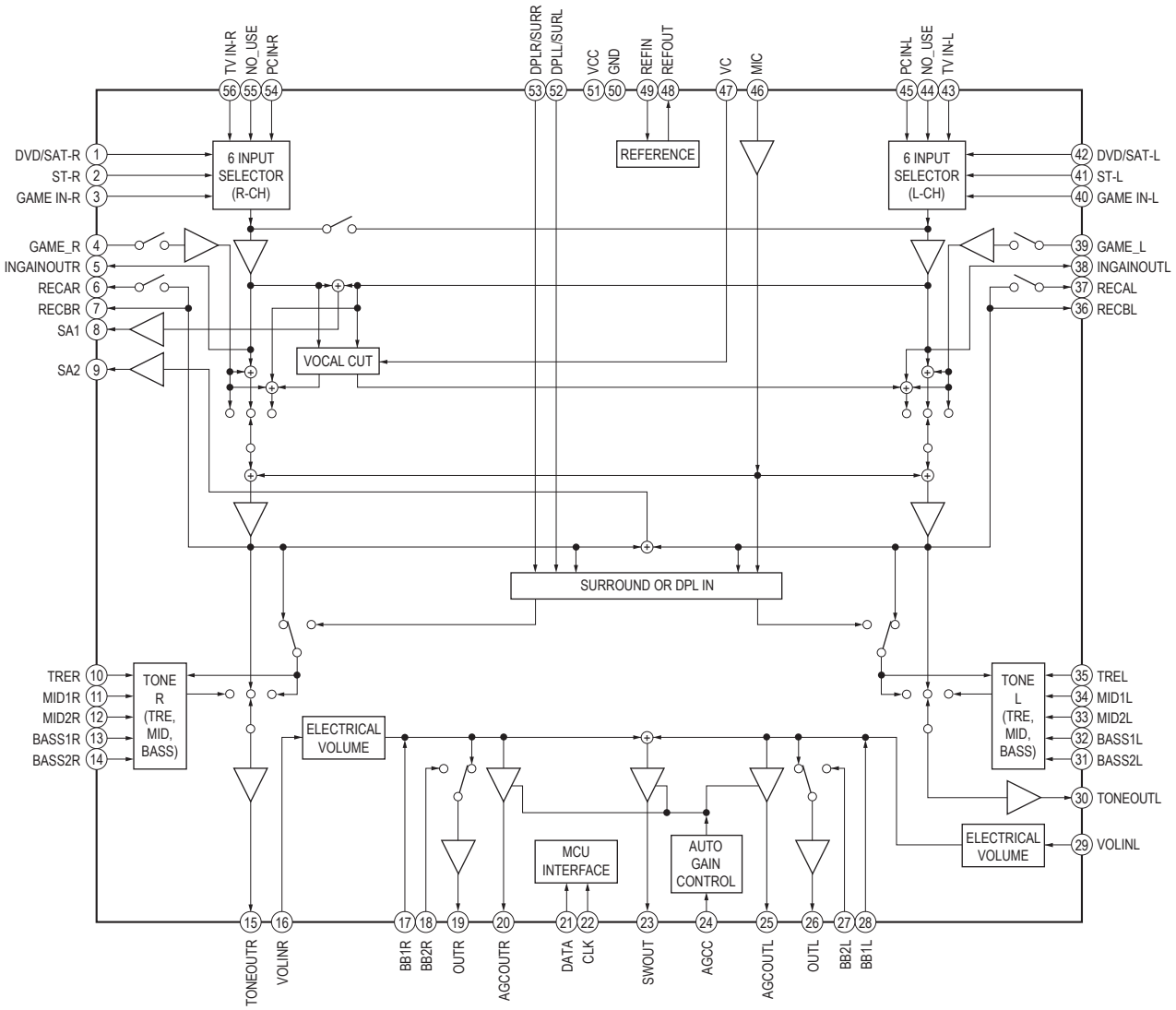

## IC111 MM1661JHBE (DMB21 BOARD (2/3))

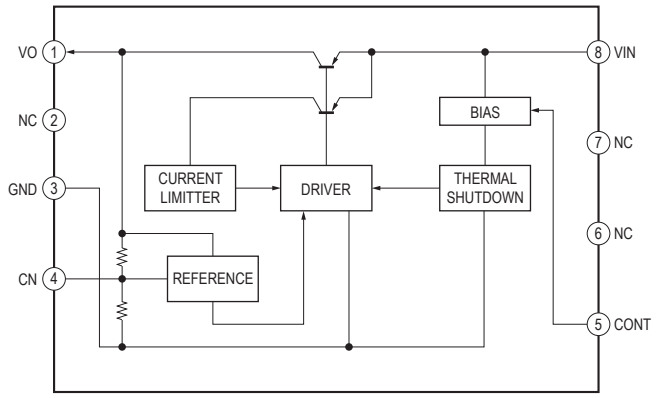


## IC201 FAN8036L (DMB21 BOARD (3/3))

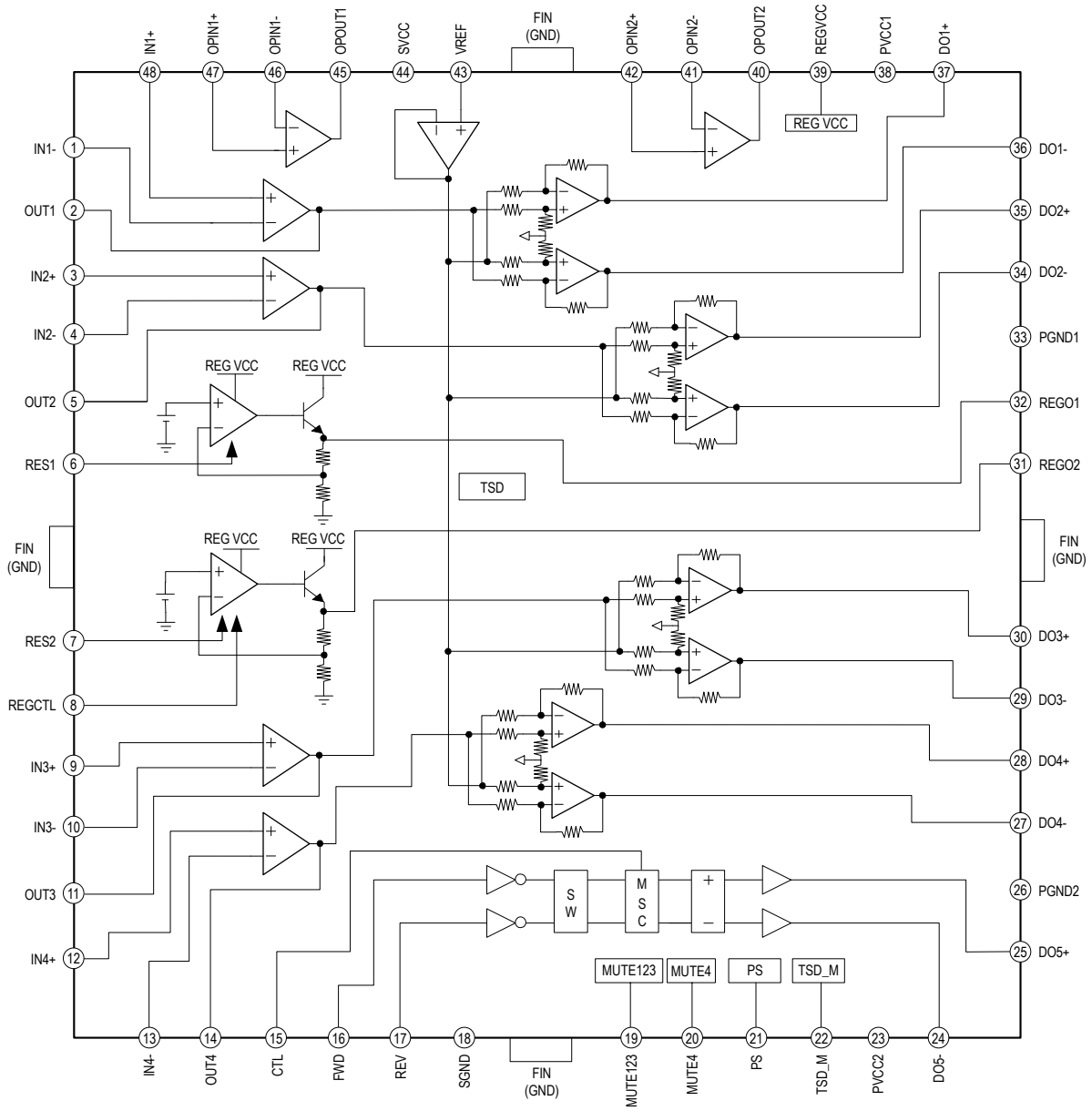

## IC4601 PCM1808PWR (DMB21 BOARD (1/3))

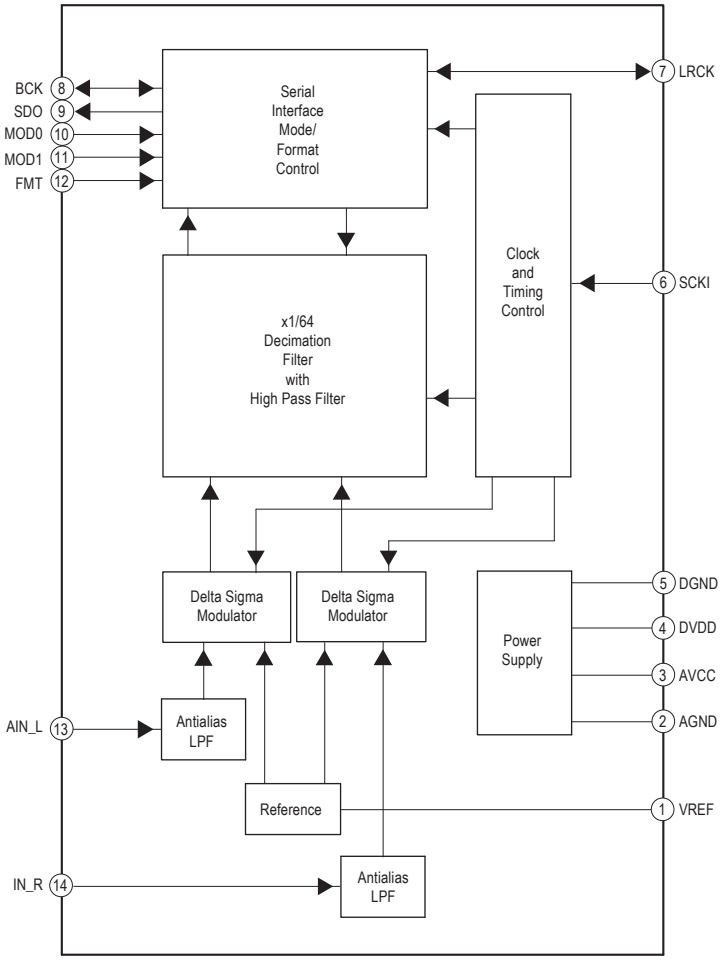

## IC4602 PCM1753DBQR (DMB21 BOARD (1/3))

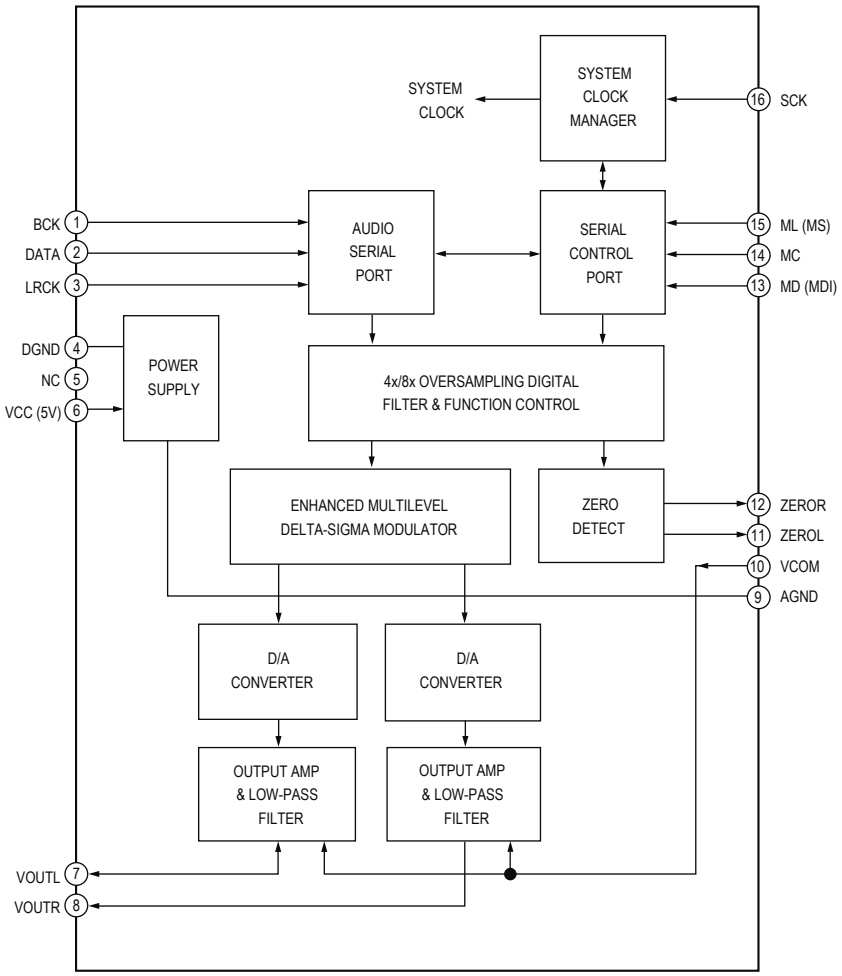


## IC4607 SRC4182 (DMB21 BOARD (1/3))

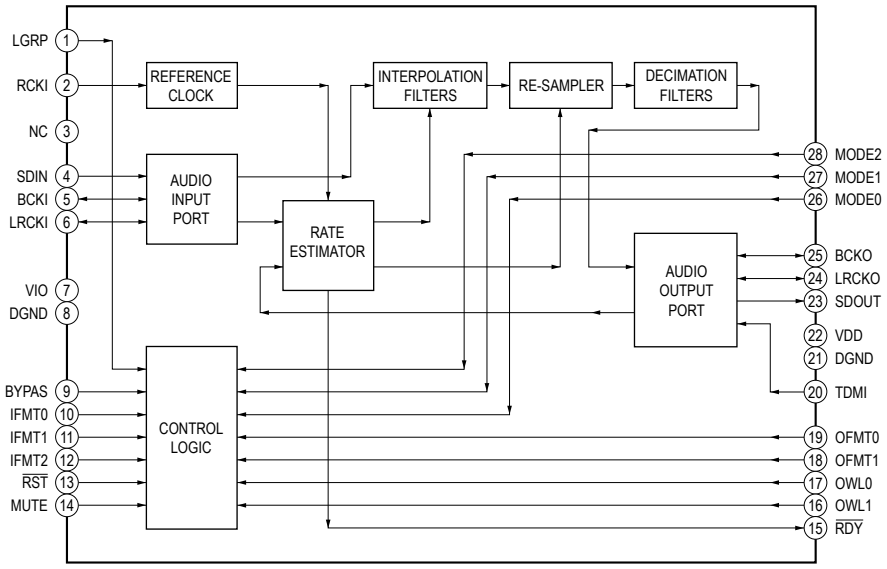

## IC4608 TC7WH157FK (DMB21 BOARD (1/3))

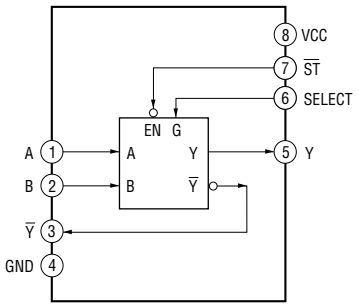


## IC901 PT6324-LQ (DISPLAY BOARD)

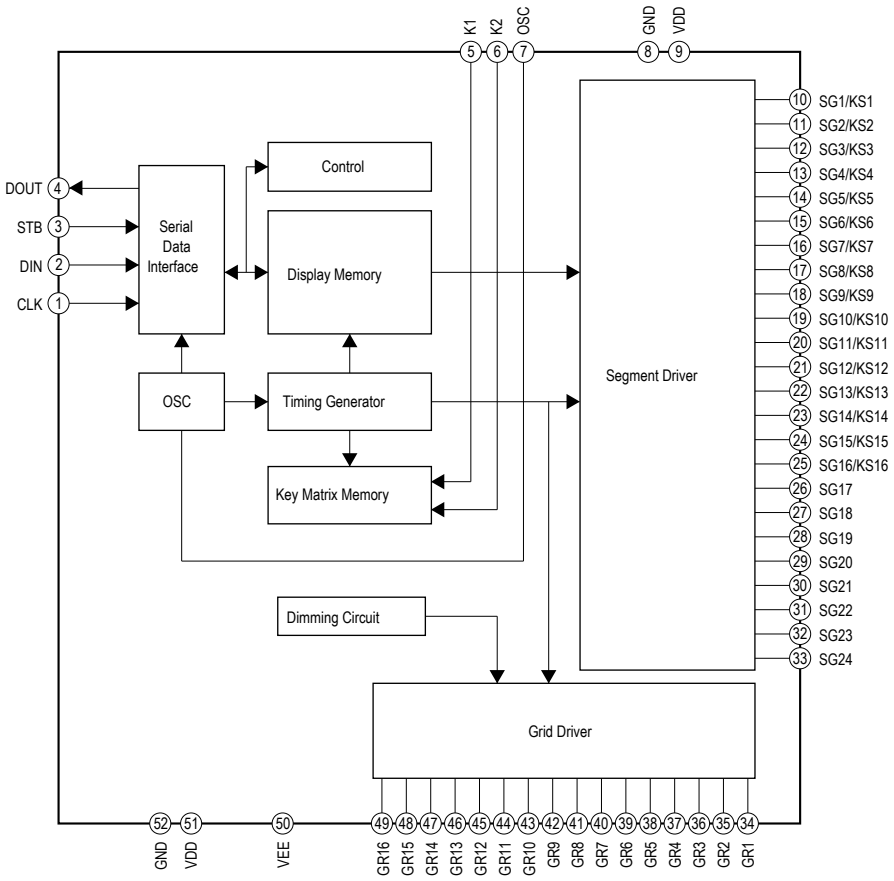

## IC1406, IC1407, IC1408, IC1409 IRS2092STRPBF (DAMP BOARD (2/4))

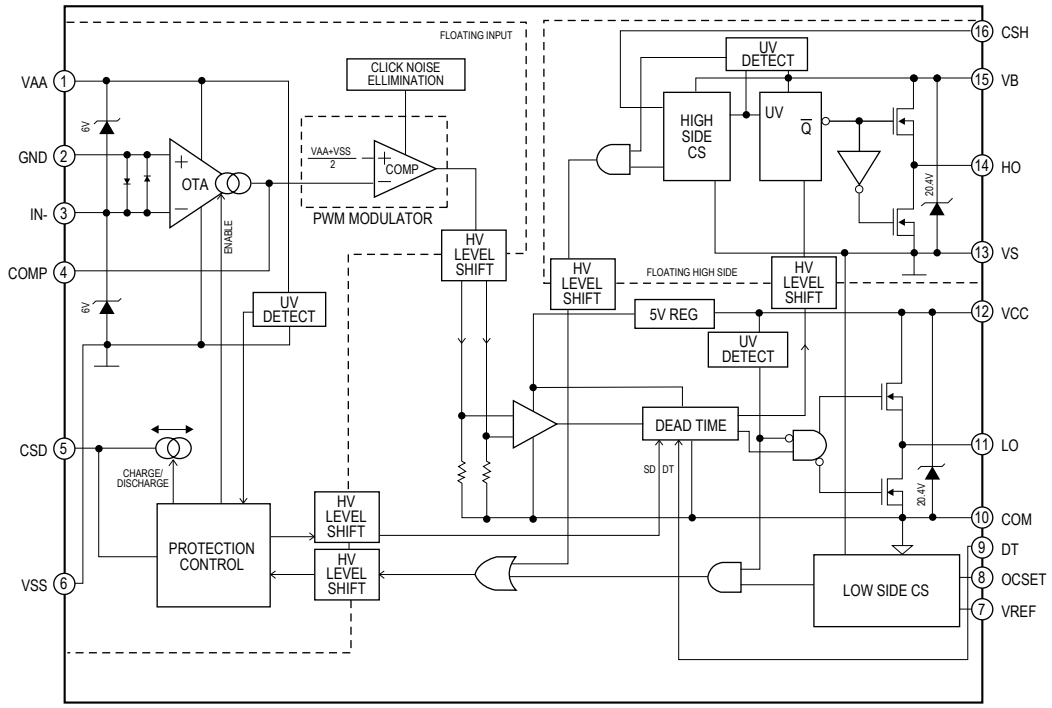


## IC1410, IC1411 BA4580RF-E2 (DAMP BOARD (2/4))
## IC1405 NJM2903V (TE2) (DAMP BOARD (4/4))
## IC301 NJM2903V (TE2) (MAIN BOARD (2/4))

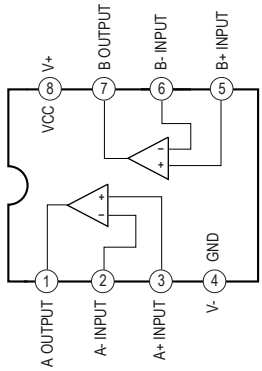

## IC1602 RS5B800-0002E2 (TUNER BOARD)

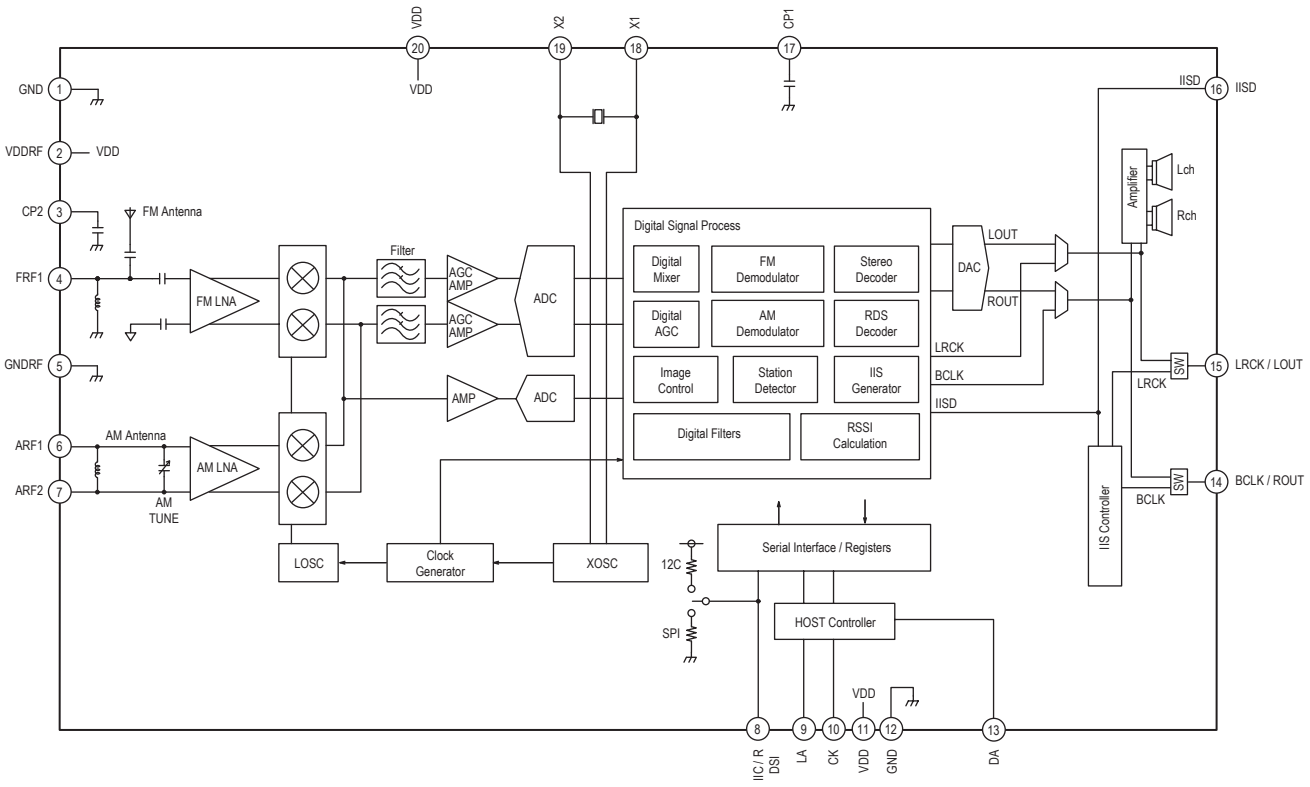

• **IC Pin Function Descriptions**

**MAIN BOARD (1/4) IC100 R5F3650KBDFA (SYSTEM CONTROL)**

| Pin No. | Pin Name | I/O | Description |
|---|---|---|---|
| 1 | FL-DATA | O | Serial data output signal to FL Driver, PT6324 |
| 2 | FL-CLK | O | Serial data clock signal to FL Driver, PT6324 |
| 3 | LED-DRIVER-LATCH | O | Latch Signal to LED Driver, R8A66166SP |
| 4 | SIRCS | I | Remote control signal input |
| 5 | LED-DRIVER-DATA | O | Serial data output signal to LED Driver, R8A66166SP |
| 6 | /LED-DRIVER-OE | O | Output Enable Signal to LED Driver, R8A66166SP |
| 7 | LED-DRIVER-CLK | O | Serial data clock signal to LED Driver, R8A66166SP |
| 8 | BYTE | - | Ground terminal |
| 9 | CNVSS | - | Ground terminal |
| 10 | XC-IN | I | Sub system clock input terminal (32.768kHz) |
| 11 | XC-OUT | O | Sub system clock output terminal (32.768kHz) |
| 12 | RESET | I | System reset signal input from the reset signal IC "L": reset<br>After the power supply rises, "L" is input for several hundreds msec and then change to "H". |
| 13 | XOUT | O | Main system clock output terminal (8MHz) |
| 14 | VSS | - | Ground terminal |
| 15 | XIN | I | Main system clock input terminal (8MHz) |
| 16 | VCC | - | Power supply terminal (+3.3V) |
| 17 | NMI | I | Non-maskable interrupt input terminal |
| 18 | TRG-SW | I | CDM Triggering switch |
| 19 | AC-CUT | I | AC off detection signal input from the reset signal IC "L": AC Cut detected |
| 20 | ST-RDS | I | Input for RDS Text Detect Signal (L: RDS Detect) |
| 21 | /FL-DRIVER-CS | O | Serial data chip select signal to FL Driver, PT6324 |
| 22 | ST-CLK | I/O | Tuner IC: Data signal for IIC communcation |
| 23 | NO-USE | O | Unused |
| 24 | ST-DATA | I/O | Tuner IC: Clock signal for IIC communcation |
| 25 | VBUS-OE | O | MTK Vbus Output enable control pin |
| 26 | DAMP-CLK | O | Clock to Digital Amp |
| 27 | /HUB-OC1 | I | USB Overcurrent Detection input port 1 |
| 28 | /HUB-OC2 | I | USB Overcurrent Detection input port 2 |
| 29 | I2C-CLK | I/O | Clock signal for IIC communcation between Master Control controller and Display Control controller |
| 30 | I2C-DATA | I/O | Data signal for IIC communcation between Master Control controller and Display Control controller |
| 31 | TXD1 | I | Unused |
| 32 | RXD1 | I | Unused |
| 33 | CLK1 | I | Unused |
| 34 | RTS1 | I | Unused |
| 35 | MTK-SOD | O | Data Out Signal to MTK DMB Board |
| 36 | MTK-SIO | I | Data In Signal from MTK DMB Board |
| 37 | MTK-CLK | I | Clock Signal from MTK DMB Board |
| 38 | DIGITAL_SEL | O | Digital Selector Pin |
| 39 | CLKOUT | O | Unused |
| 40 | MTK-BUSY | O | BUSY Signal communication between MTK Board |
| 41 | MTK-XIFCS | I | Chip Select Signal from MTK DMB Board |
| 42 | MTK-RESET | O | MTK DMB Board reset pin |
| 43 | MTK_POWER_CTRL | O | Power Control pin for MTK DMB board |
| 44 | HUB-RESET | O | MTK Hub Board reset pin |
| 45 | HUB-VBUS-DETECT | O | Hub Power (V-DET) Control Port |
| 46 | FLASH-MEMORY | O | Update software recovery |
| 47 | AUDIO-DATA | O | Serial data output to audio signal processor, R2A15216FP |
| 48 | NO-USE | O | Unused |
| 49 | AUDIO-CLK | O | Serial data transfer clock signal output to audio signal processor, R2A15216FP |
| 50 | NO-USE | O | Unused |
| 51 | /LINE-MUTE | O | Muting Control Switch for all speaker mute control pin. "L": MUTE on |

| Pin No. | Pin Name | I/O | Description |
|---|---|---|---|
| 52 | SPK-L-LED-RED | O | Speaker Left RED LED Control Pin. “H”: LED on |
| 53 | SPK-L-LED-BLUE | O | Speaker Left BLUE LED Control Pin. “H”: LED on |
| 54 | SPK-R-LED-RED | O | Speaker RIGHT RED LED Control Pin. “H”: LED on |
| 55 | SPK-R-LED-BLUE | O | Speaker RIGHT BLUE LED Control Pin. “H”: LED on |
| 56 | NO-USE | O | Unused |
| 57 | NO-USE | O | Unused |
| 58 | SUB-ON | O | Main power on/off control signal output “H”:power on |
| 59 | PCONT-SUB | O | 13.5V & 7V Power Switch Control pin. “H”: 13V |
| 60 | FAN-EN | O | Fan Control Switch “H”: fan on |
| 61 | /FANBLOCK | I | Fan Block Detection Pin. “L”: Block On |
| 62 | VCC2 | - | Power supply terminal (+3.3V) |
| 63 | PCONT-MAIN | O | Digital Amp Module Power Control Pin. “H”: ON |
| 64 | VSS | - | Ground terminal |
| 65 | NO-USE | O | Unused |
| 66 | NO-USE | O | Unused |
| 67 | MIC-DATA-IN | I | VACS level detection signal (A/D input) |
| 68 | AD-KEY-0 | I | Key input terminal (A/D input) |
| 69 | NO-USE | O | Unused |
| 70 | /DAMP-RESET | O | Digital Amp Reset Pin |
| 71 | /SD-SLOW | I | Digital Amp Shutdown Protection Detect on Amplifier Pin. “L”: Protect on’ |
| 72 | /SD-FAST | I | Protection Detect on power supply Pin. “L”: Protect on’ |
| 73 | NO-USE | O | Unused |
| 74 | NO-USE | O | Unused |
| 75 | RESONANCE | I | Resonance Protection Detection Pin |
| 76 | NO-USE | O | Unused |
| 77 | DSP-DATA | I/O | DSP IC: Data signal for IIC communcation |
| 78 | DSP-CLK | I/O | DSP IC: Clock signal for IIC communcation |
| 79 | DSP-RESET | O | DSP reset pin |
| 80 | MIC-DETECT | I | Mic Input Detection pin. “H”: Mic detected |
| 81 | NO-USE | O | Unused |
| 82 | USBA-LED-BLUE | O | USB A LED Control Pin. “H”: LED on |
| 83 | NO-USE | O | Unused |
| 84 | TRYOPENPWM | O | CDM tray open PWM |
| 85 | CKSW | I | CDM chucking switch |
| 86 | OCSW | I | CDM open close switch |
| 87 | REV | O | CDM motor revious |
| 88 | FWR | O | CDM motor forward |
| 89 | STBY-LED | O | Standby LED |
| 90 | DEST-IN | I | Destination setting terminal (A/D input) |
| 91 | NO-USE | O | Unused |
| 92 | MTK-POWER-MONITOR | I | MTK DMB Board power monitor input pin (A/D input) |
| 93 | NO-USE | O | Unused |
| 94 | AD-KEY-1 | I | Key input terminal (A/D input) |
| 95 | USBB-LED-RED | O | USB B RED LED Control Pin. “H”: LED on |
| 96 | AVSS | I | Ground terminal (for A/D conversion) |
| 97 | MASTER-VOLUME | I | Jog dial pulse input from the MASTER VOLUME encoder (A/D input) |
| 98 | VREF | I | A/D Converter reference voltage input terminal (+3.3V) |
| 99 | AVCC | - | Power supply terminal (+3.3V) (for A/D conversion) |
| 100 | USBB-LED-BLUE | O | USB B BLUE LED Control Pin. “H”: LED on |

**DMB21 BOARD (2/3) IC101 CXD9968R (LE)**

| Pin No. | Pin Name | I/O | Description |
|---|---|---|---|
| 1 | RF_A | I | RF main beam (C) input from the optical pick-up block |
| 2 | RF_B | I | RF main beam (B) input from the optical pick-up block |
| 3 | RF_C | I | RF main beam (A) input from the optical pick-up block |
| 4 | RF_D | I | RF main beam (D) input from the optical pick-up block |
| 5 | RF_E | I | RF sub beam (F) input from the optical pick-up block |
| 6 | RF_F | I | RF sub beam (E) input from the optical pick-up block |
| 7 | AVDD18_2 | - | Power supply terminal (+1.8V) |
| 8 | AVDD33_1 | - | Power supply terminal (+3.3V) |
| 9 | XTALI | I | System clock input terminal (27 MHz) |
| 10 | XTALO | O | System clock output terminal (27 MHz) |
| 11 | AGND33 | - | Ground terminal |
| 12 | V2O | O | Reference voltage (+2V) output to the optical pick-up block |
| 13 | V14/VREFO | O | Reference voltage (+1.4V) output terminal |
| 14 | REXT | I | Current reference input terminal Fixed at “L” in this set |
| 15, 16 | MDI1, MDI2 | I | Laser power monitor input from the optical pick-up block |
| 17, 18 | LDO1, LDO2 | O | Laser diode drive signal output to the optical pick-up block |
| 19 | AVDD33_2 | - | Power supply terminal (+3.3V) |
| 20 | DMO | O | Spindle motor control signal output to the motor driver |
| 21 | FMO | O | Sled motor control signal output to the motor driver |
| 22 | MUTE4 | O | Muting signal output to the coil/motor driver (for spindle motor) |
| 23 | MSW | O | CD/DVD selection signal output terminal “L”: CD, “H”: DVD |
| 24 | TRO | O | Tracking coil control signal output to the coil driver |
| 25 | FOO | O | Focus coil control signal output to the coil driver |
| 26 | EEWP | - | Not used |
| 27, 28 | USB_DP, USB_DM | I/O | Two-way audio serial data with the USB controller |
| 29 | VDD33_USB | - | Power supply terminal (+3.3V) |
| 30 | VSS33_USB | - | Ground terminal |
| 31 | PAD_VRT | I/O | USB generating reference current terminal |
| 32 | VDD18_USB | - | Power supply terminal (+1.8V) |
| 33 | SCL | O | Serial clock signal output terminal Not used |
| 34 | SDA | I/O | Two-way serial data bus terminal Not used |
| 35 | IFSDI | I | Serial data input from the system controller |
| 36 | FS_CS# | O | Chip select signal output to the flash ROM |
| 37 | SF_DO | O | Serial data output to the flash ROM |
| 38 | SF_DI | I | Serial data input from the flash ROM |
| 39 | SF_CK | O | Serial clock signal output to the flash ROM |
| 40 | IFSCK | O | Serial data transfer clock signal output to the system controller |
| 41 | IFSOD | O | Serial data output to the system controller |
| 42 | ICE | I | ICE mode enable setting terminal Not used |
| 43 | PRST# | I | Reset signal input from the system controller “L”: reset |
| 44 | IR | I | IR control signal input terminal Not used |
| 45 to 49 | RD0 to RD4 | I/O | Two-way data bus with the SD-RAM |
| 50 | DVDD33 | - | Power supply terminal (+3.3V) |
| 51 to 53 | RD5 to RD7 | I/O | Two-way data bus with the SD-RAM |
| 54 | DVDD18 | - | Power supply terminal (+1.8V) |
| 55 | DQM0 | O | Data mask signal output to the SD-RAM |
| 56 to 59 | RD15 to RD 12 | I/O | Two-way data bus with the SD-RAM |
| 60 | DVSS33 | - | Ground terminal |
| 61 to 64 | RD11 to RD8 | I/O | Two-way data bus with the SD-RAM |
| 65 | DQM1 | O | Data mask signal output to the SD-RAM |
| 66 | RCLK | O | Clock signal output to the SD-RAM |
| 67 | RA11 | O | Address signal output to the SD-RAM |
| 68 | DVDD33 | - | Power supply terminal (+3.3V) |

| Pin No. | Pin Name | I/O | Description |
|---|---|---|---|
| 69 to 74 | RA9 to RA4 | O | Address signal output to the SD-RAM |
| 75 | RWE# | O | Write enable signal output to the SD-RAM |
| 76 | CAS# | O | Column address strobe signal output to the SD-RAM |
| 77 | RAS# | O | Row address strobe signal output to the SD-RAM |
| 78 | BA0 | O | Bank address signal output to the SD-RAM |
| 79 | DVSS18 | - | Ground terminal |
| 80 | BA1 | O | Bank address signal output to the SD-RAM |
| 81 to 83 | RA10, RA0, RA1 | O | Address signal output to the SD-RAM |
| 84 | DVDD33 | - | Power supply terminal (+3.3V) |
| 85, 86 | RA2, RA3 | O | Address signal output to the SD-RAM |
| 87 | IFBSY | I | Communication initialization request signal input from the system controller |
| 88 | IFCS# | O | Communication initialization request acknowledge signal output to the system controller |
| 89 | RX | - | Not used |
| 90 | DVDD18 | - | Power supply terminal (+1.8V) |
| 91 | TX | - | Not used |
| 92 | XMAMUTE | - | Not used |
| 93 | SPDIF | O | SPDIF signal output terminal Not used |
| 94 | GPIO | I | Thermal shut down signal input from the coil/motor driver |
| 95 | DACVDDC | - | Power supply terminal (+3.3V) |
| 96 | VREF | I | Band gap reference voltage terminal |
| 97 | FS | I | Full scale adjustment terminal |
| 98 | DACVSSC | - | Ground terminal |
| 99 | CVBS | O | Composite video signal output terminal Not used |
| 100, 101 | DACVDDB, DACVDDA | - | Power supply terminal (+3.3V) |
| 102 | SY/Y/G | O | Component video (Y) signal output terminal Not used |
| 103 | SC/CB/B | O | Component video (Pb/Cb) signal output terminal Not used |
| 104 | CR/R | O | Component video (Pr/Cr) signal output terminal Not used |
| 105 | AADVSS | - | Ground terminal |
| 106 | GPIO19 | I | Audio data input from the A/D converter (for USB) |
| 107 | MUTE123 | - | Not used |
| 108 | LIMITSW | - | Not used |
| 109, 110 | AADVDD, APLLVDD | - | Power supply terminal (+3.3V) |
| 111 | APLLCAP | I | External capacitor connecting terminal |
| 112, 113 | ADACVSS2, ADACVSS1 | - | Ground terminal |
| 114 | GPIO | O | Master clock signal output to the A/D converter and D/A converter |
| 115 | GPIO | O | Bit clock signal output to the A/D converter and D/A converter |
| 116 | GPIO | O | Muting signal output to the coil/motor driver (for focus/tracking coil and sled motor) |
| 117 | AVCM | - | Audio D/A converter reference voltage terminal |
| 118 | GPIO | I | Limit detection switch input terminal |
| 119 | GPIO | O | L/R sampling clock signal output to the A/D converter and D/A converter |
| 120 | GPIO | O | Audio data output to the D/A converter |
| 121, 122 | ADACVDD1, ADACVDD2 | - | Power supply terminal (+3.3V) |
| 123 | AVDD18_1 | - | Power supply terminal (+1.8V) |
| 124 | AGND18 | - | Ground terminal |
| 125, 126 | RF_IP, OPOUT | I | AC coupled RF signal input from the optical pick-up block |
| 127 | IOPMON/OPINP | I | Power monitor terminal |
| 128 | SPFG/OPINN | I | Spindle motor hall sensor input from the motor driver |

# SECTION 6
# EXPLODED VIEWS

**Note:**
- The mechanical parts with no reference number in the exploded views are not supplied.
- Items marked "*" are not stocked since they are seldom required for routine service.
  Some delay should be anticipated when ordering these items.
- -XX and -X mean standardized parts, so they may have some difference from the original one.
- Accessories are given in the last of this parts list.

- Abbreviation
  E2 : 120 V AC area in E model
  E51 : Chilean and Peruvian models
  EA : Saudi Arabia model
  MX : Mexican model
  MY : Malaysia model
  SAF : South African model

The components identified by mark ⚠ or dotted line with mark ⚠ are critical for safety.
Replace only with part number specified.

## 6-1. MAIN SECTION

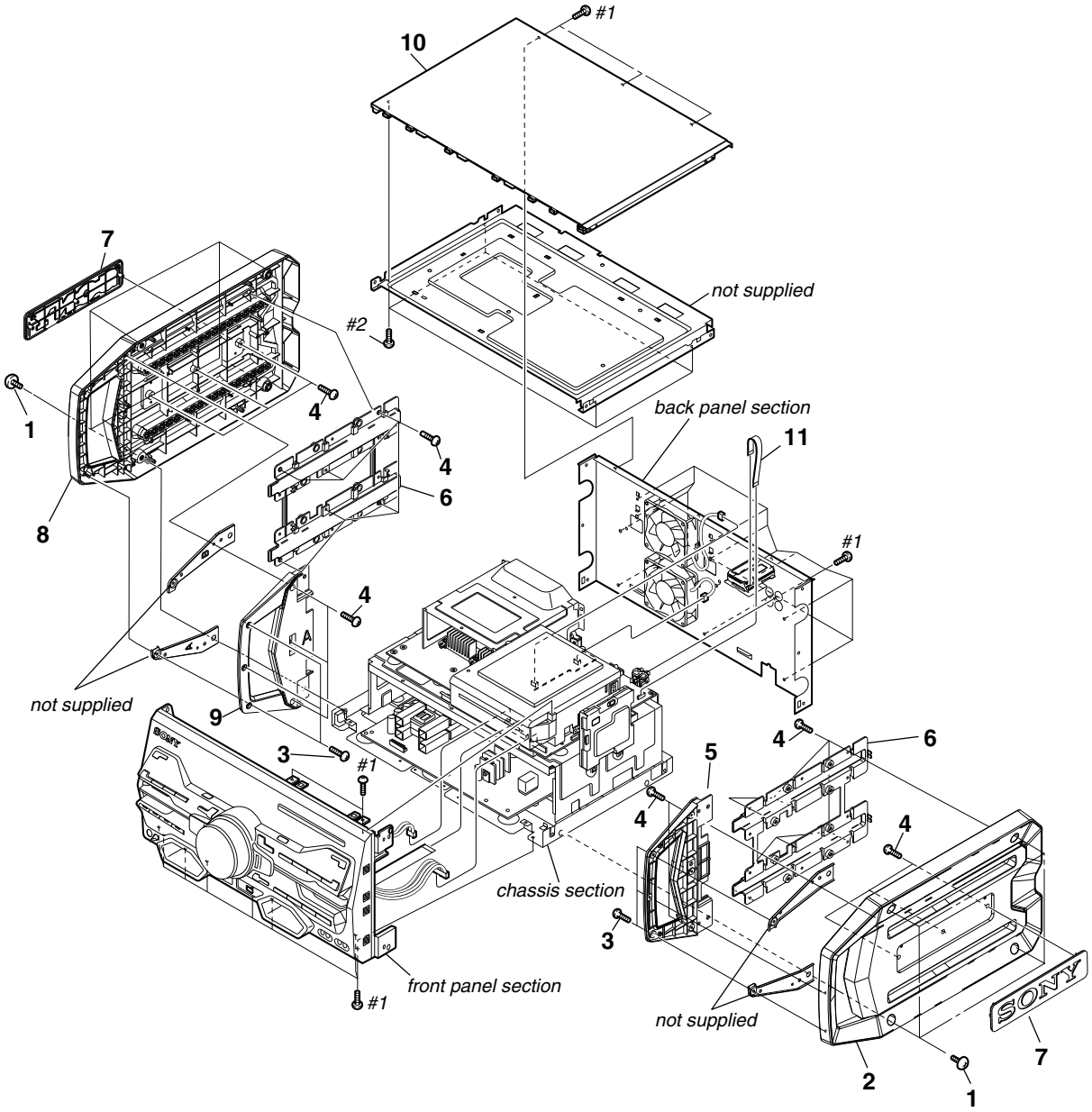


| Ref. No. | Part No. | Description | Remark |
|---|---|---|---|
| 1 | 4-874-614-62 | SCREW(1) (3.5 X 16), TAPPING | |
| 2 | 4-275-639-01 | PANEL, SIDE B | |
| 3 | 3-363-099-02 | SCREW (CASE 3 TP2) | |
| 4 | 3-087-053-01 | +BVTP2.6 (3CR) | |
| 5 | 4-275-641-01 | HANDLE, COVER B | |
| 6 | 4-291-803-01 | COVER, HOLE | |
| 7 | 4-277-991-01 | PLATE, SONY | |
| 8 | 4-275-638-01 | PANEL, SIDE A | |
| 9 | 4-275-640-01 | HANDLE, COVER A | |
| 10 | 4-275-642-01 | PANEL, TOP (E2, E51, MX) | |
| 10 | 4-275-642-11 | PANEL, TOP (SAF, EA, MY) | |
| 11 | 1-828-944-51 | WIRE (FLAT TYPE) (7 CORE) | |
| #1 | 7-685-647-71 | SCREW +BVTP 3X10 TYPE2 IT-3 | |
| #2 | 7-685-646-71 | SCREW +BVTP 3X8 TYPE2 IT-3 | |

## 6-2. FRONT PANEL SECTION

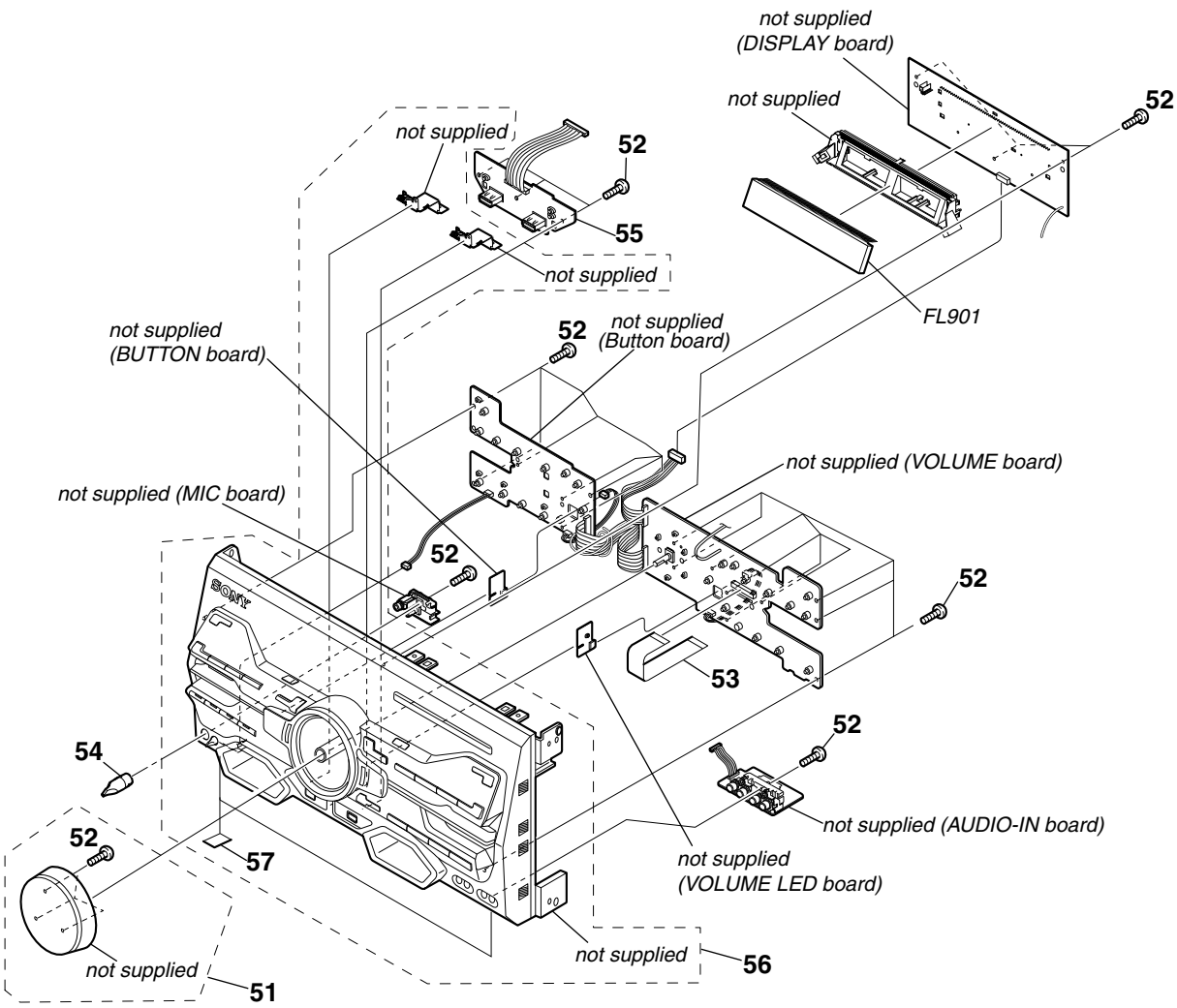


| Ref. No. | Part No. | Description | Remark |
|---|---|---|---|
| 51 | X-2581-185-1 | KNOB VOLUME, ASSY | |
| 52 | 3-087-053-01 | +BVTP2.6 (3CR) | |
| 53 | 1-829-021-51 | WIRE (FLAT TYPE) (23 CORE) | |
| 54 | 2-895-507-01 | KNOB (MIC) | |
| 55 | A-1820-972-A | USB BOARD, COMPLETE | |
| 56 | X-2581-184-1 | PANEL FRONT, ASSY | |
| 57 | 4-176-619-01 | FOOT, RUBBER | |
| FL901 | 1-483-367-11 | VACUUM FLUORESCENT DISPLAY | |

## 6-3. BACK PANEL SECTION

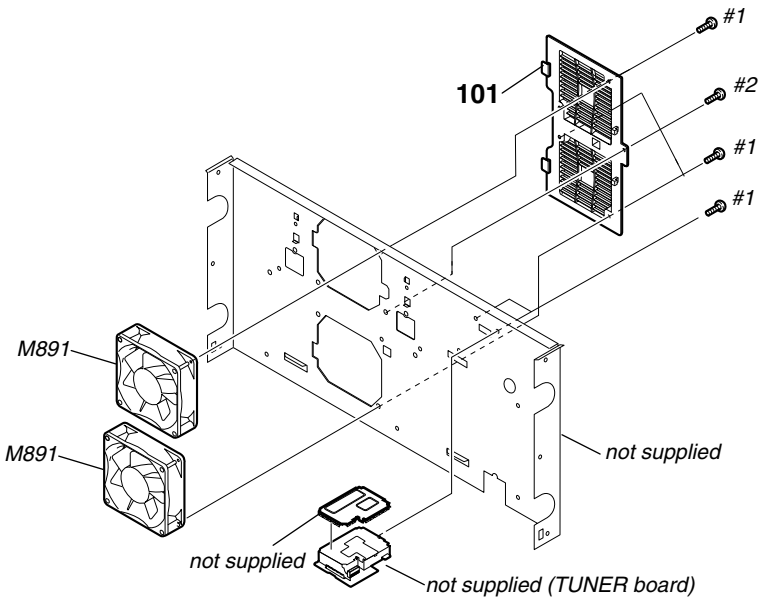


| Ref. No. | Part No. | Description | Remark |
|---|---|---|---|
| 101 | 4-275-644-01 | COVER, FAN | |
| ⚠ M891 | 1-855-006-11 | FAN, DC | |
| #1 | 7-685-647-71 | SCREW +BVTP 3X10 TYPE2 IT-3 | |
| #2 | 7-685-646-71 | SCREW +BVTP 3X8 TYPE2 IT-3 | |

## 6-4. CHASSIS SECTION

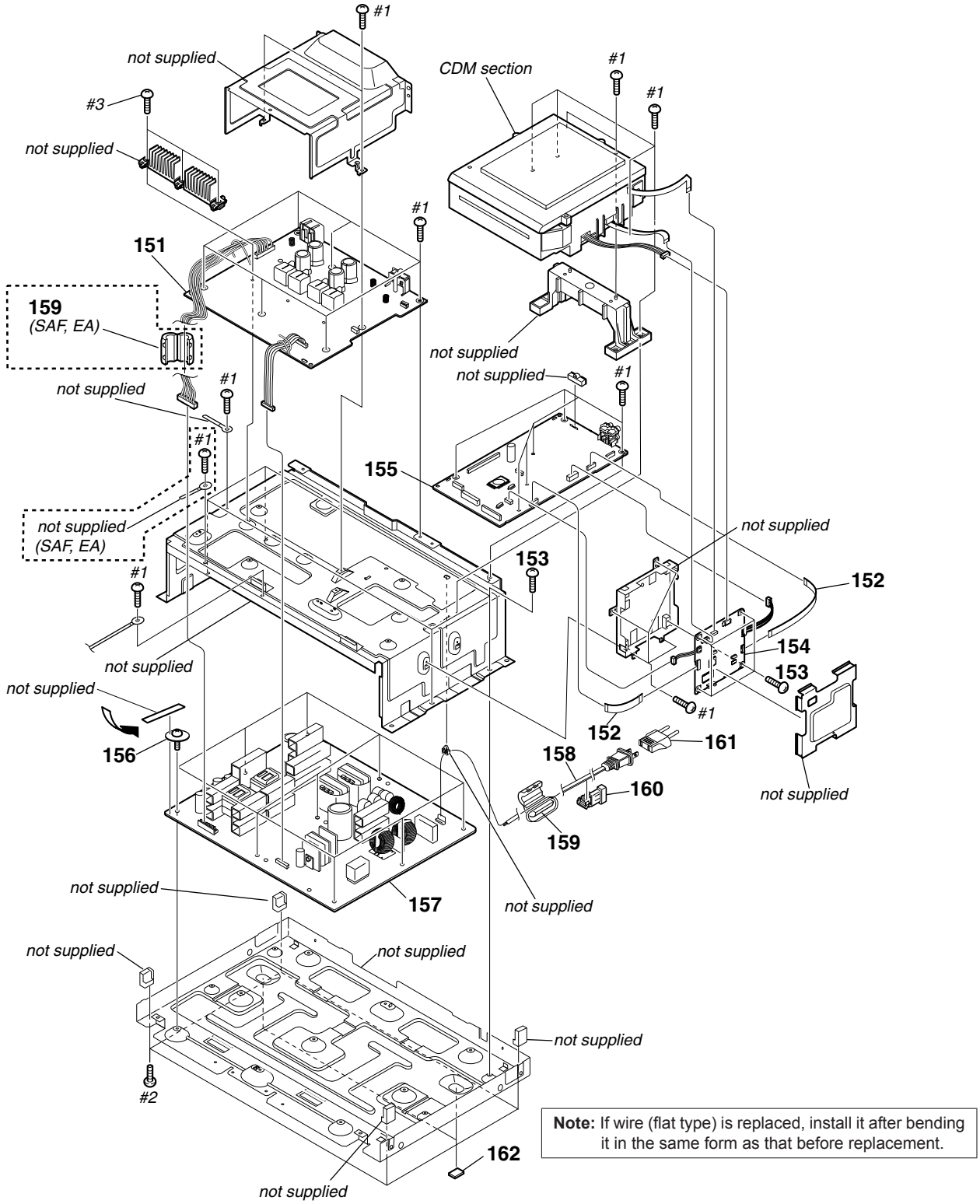


**Note:** If wire (flat type) is replaced, install it after bending it in the same form as that before replacement.

| Ref. No. | Part No. | Description | Remark |
|---|---|---|---|
| 151 | A-1820-978-A | DAMP BOARD, COMPLETE | |
| 152 | 1-828-328-51 | WIRE (FLAT TYPE) (13 CORE) | |
| 153 | 3-077-331-01 | +BV3 (3-CR) | |
| 154 | A-1820-980-A | DMB21 BOARD, COMPLETE | |
| 155 | A-1820-965-A | MAIN BOARD, COMPLETE (E2, E51) | |
| 155 | A-1820-984-A | MAIN BOARD, COMPLETE (EA) | |
| 155 | A-1833-646-A | MAIN BOARD, COMPLETE (MX) | |
| 155 | A-1833-653-A | MAIN BOARD, COMPLETE (MY) | |
| 156 | 4-295-657-01 | SCREW, WASHER (M3) | |
| 157 | 1-474-315-11 | SWITCHING REGULATOR | |
| 158 | 1-837-344-11 | CORD, POWER SUPPLY (E2, E51, MX) | |
| 158 | 1-838-939-11 | CORD, POWER (SAF) | |
| 158 | 1-838-969-11 | POWER-SUPPLY CORD (EA, MY) | |
| 159 | 1-457-369-12 | CORE, FERRITE | |
| 160 | 4-966-267-12 | BUSHING (FBS001), CORD | |
| 161 | 1-569-007-12 | ADAPTOR, CONVERSION 2P (E2, E51) | |
| 162 | 4-176-619-01 | FOOT, RUBBER | |
| #1 | 7-685-647-71 | SCREW +BVTP 3X10 TYPE2 IT-3 | |
| #2 | 7-685-646-71 | SCREW +BVTP 3X8 TYPE2 IT-3 | |
| #3 | 7-685-874-09 | SCREW +BVTT 3X12(S) | |

## 6-5. CDM SECTION

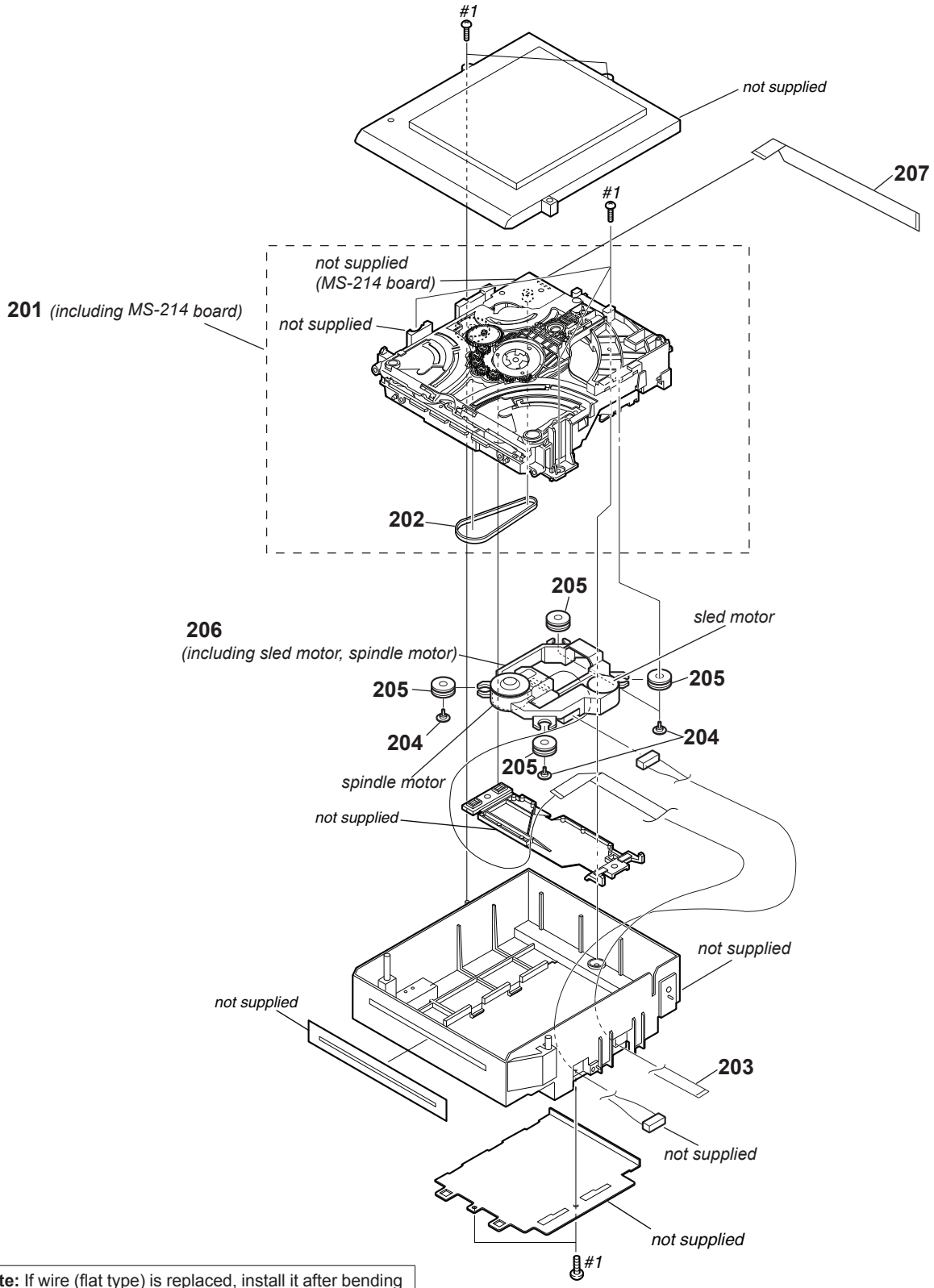


**Note:** If wire (flat type) is replaced, install it after bending it in the same form as that before replacement.

| Ref. No. | Part No. | Description | Remark |
|---|---|---|---|
| 201 | A-1114-646-A | MD (AU) ASSY (including MS-214 board) | |
| 202 | 4-245-653-01 | BELT (MOT) | |
| 203 | 1-828-252-51 | WIRE (FLAT TYPE) (24 CORE) | |
| 204 | 3-087-599-01 | INSULATOR SCREW | |
| 205 | 2-634-618-31 | INSULATOR | |
| ⚠ 206 | 8-820-322-04 | DEVICE, OPTICAL KHM-313CAB/C2RP (including sled motor, spindle motor) | |
| 207 | 1-828-300-11 | WIRE (FLAT TYPE) (7 CORE) | |
| #1 | 7-685-647-71 | SCREW +BVTP 3X10 TYPE2 IT-3 | |

AUDIO-IN | BUTTON | BUTTON LED

# SECTION 7
# ELECTRICAL PARTS LIST

**Note:**
- Due to standardization, replacements in the parts list may be different from the parts specified in the diagrams or the components used on the set.
- -XX and -X mean standardized parts, so they may have some difference from the original one.
- RESISTORS
  All resistors are in ohms.
  METAL: Metal-film resistor.
  METAL OXIDE: Metal oxide-film resistor.
  F: nonflammable

- Items marked "*" are not stocked since they are seldom required for routine service.
  Some delay should be anticipated when ordering these items.

- SEMICONDUCTORS
  In each case, u: µ, for example:
  uA. . : µA. . , uPA. . , µPA. . ,
  uPB. . : µPB. . , uPC. . , µPC. . ,
  uPD. . : µPD. .
- CAPACITORS
  uF: µF
- COILS
  uH: µH

The components identified by mark ⚠ or dotted line with mark ⚠ are critical for safety.
Replace only with part number specified.

When indicating parts by reference number, please include the board name.

- Abbreviation
  E2 : 120V AC area in E model
  E51 : Chilean and Peruvian models
  EA : Saudi Arabia model
  MX : Mexican model
  MY : Malaysia model
  SAF : South African model

| Ref. No. | Part No. | Description | | | Remark |
|---|---|---|---|---|---|
| | | AUDIO-IN BOARD | | | |
| | | ********** | | | |
| | | < CAPACITOR > | | | |
| C1200 | 1-162-960-11 | CERAMIC CHIP | 220PF | 10% | 50V |
| C1201 | 1-162-960-11 | CERAMIC CHIP | 220PF | 10% | 50V |
| C1202 | 1-162-960-11 | CERAMIC CHIP | 220PF | 10% | 50V |
| C1203 | 1-162-960-11 | CERAMIC CHIP | 220PF | 10% | 50V |
| C1204 | 1-100-385-91 | CERAMIC CHIP | 0.47uF | | 25V |
| C1205 | 1-100-385-91 | CERAMIC CHIP | 0.47uF | | 25V |
| C1206 | 1-162-964-11 | CERAMIC CHIP | 0.001uF | 10% | 50V |
| C1207 | 1-162-964-11 | CERAMIC CHIP | 0.001uF | 10% | 50V |
| | | < DIODE > | | | |
| D1200 | 6-500-848-01 | DIODE MC2840-T112-1 | | | |
| D1201 | 6-500-848-01 | DIODE MC2840-T112-1 | | | |
| | | < JACK > | | | |
| J1200 | 1-764-767-21 | JACK, PIN 2P (TV) | | | |
| J1201 | 1-764-767-21 | JACK, PIN 2P (PC) | | | |
| | | < RESISTOR > | | | |
| R1200 | 1-216-839-11 | METAL CHIP | 33K | 5% | 1/10W |
| R1201 | 1-216-839-11 | METAL CHIP | 33K | 5% | 1/10W |
| R1202 | 1-216-839-11 | METAL CHIP | 33K | 5% | 1/10W |
| R1203 | 1-216-839-11 | METAL CHIP | 33K | 5% | 1/10W |
| R1204 | 1-216-838-11 | METAL CHIP | 27K | 5% | 1/10W |
| R1205 | 1-216-838-11 | METAL CHIP | 27K | 5% | 1/10W |
| R1206 | 1-216-838-11 | METAL CHIP | 27K | 5% | 1/10W |
| R1207 | 1-216-838-11 | METAL CHIP | 27K | 5% | 1/10W |
| | | ********** | | | |
| | | BUTTON BOARD | | | |
| | | ********** | | | |
| | | < DIODE > | | | |
| D1251 | 6-502-469-01 | DI SLI-325URT31WR | | | |
| D1256 | 6-503-224-02 | DI 1L0352V22F3MIT02 | | | |
| D1257 | 6-503-224-02 | DI 1L0352V22F3MIT02 | | | |
| D1258 | 6-503-224-02 | DI 1L0352V22F3MIT02 | | | |
| D1259 | 6-503-224-02 | DI 1L0352V22F3MIT02 | | | |
| | | < JUMPER RESISTOR > | | | |
| JR1201 | 1-216-296-11 | SHORT CHIP | 0 | | |
| JR1250 | 1-216-296-11 | SHORT CHIP | 0 | | |
| JR1251 | 1-216-296-11 | SHORT CHIP | 0 | | |
| JR1252 | 1-216-296-11 | SHORT CHIP | 0 | | |
| JR1253 | 1-216-296-11 | SHORT CHIP | 0 | | |
| JR1254 | 1-216-864-11 | SHORT CHIP | 0 | | |
| | | < RESISTOR > | | | |
| R1250 | 1-216-821-11 | METAL CHIP | 1K | 5% | 1/10W |
| R1257 | 1-216-819-11 | METAL CHIP | 680 | 5% | 1/10W |
| R1259 | 1-216-839-11 | METAL CHIP | 33K | 5% | 1/10W |
| R1260 | 1-216-821-11 | METAL CHIP | 1K | 5% | 1/10W |
| R1261 | 1-216-837-11 | METAL CHIP | 22K | 5% | 1/10W |
| R1263 | 1-216-823-11 | METAL CHIP | 1.5K | 5% | 1/10W |
| R1264 | 1-216-835-11 | METAL CHIP | 15K | 5% | 1/10W |
| R1265 | 1-216-823-11 | METAL CHIP | 1.5K | 5% | 1/10W |
| R1267 | 1-216-833-11 | METAL CHIP | 10K | 5% | 1/10W |
| R1268 | 1-216-825-11 | METAL CHIP | 2.2K | 5% | 1/10W |
| R1269 | 1-216-827-11 | METAL CHIP | 3.3K | 5% | 1/10W |
| R1270 | 1-216-829-11 | METAL CHIP | 4.7K | 5% | 1/10W |
| R1271 | 1-218-867-11 | METAL CHIP | 6.8K | 0.5% | 1/10W |
| | | < SWITCH > | | | |
| S1250 | 1-771-410-21 | SWITCH, TACTILE (FLANGER) | | | |
| S1251 | 1-771-410-21 | SWITCH, TACTILE (I/⏻) | | | |
| S1252 | 1-771-410-21 | SWITCH, TACTILE (ISOLATOR) | | | |
| S1253 | 1-771-410-21 | SWITCH, TACTILE (SEARCH) | | | |
| S1254 | 1-771-410-21 | SWITCH, TACTILE (SOUND FLASH) | | | |
| S1255 | 1-771-410-21 | SWITCH, TACTILE (GROOVE) | | | |
| S1256 | 1-771-410-21 | SWITCH, TACTILE (PHASER) | | | |
| S1257 | 1-771-410-21 | SWITCH, TACTILE (PRESET EQ) | | | |
| S1258 | 1-771-410-21 | SWITCH, TACTILE (REC TO USB) | | | |
| S1259 | 1-771-410-21 | SWITCH, TACTILE (RETURN) | | | |
| S1260 | 1-771-410-21 | SWITCH, TACTILE (🗀-) | | | |
| S1261 | 1-771-410-21 | SWITCH, TACTILE (▶II) | | | |
| S1262 | 1-771-410-21 | SWITCH, TACTILE (TUNING - I◁◁◀◀) | | | |
| | | ********** | | | |
| | | BUTTON LED BOARD | | | |
| | | ********** | | | |
| | | < CONNECTOR > | | | |
| CN1280 | 1-564-719-11 | PIN, CONNECTOR (SMALL TYPE) 3P | | | |
| | | < DIODE > | | | |
| D1280 | 6-503-224-02 | DI 1L0352V22F3MIT02 | | | |

| Ref. No. | Part No. | Description | | | Remark |
|---|---|---|---|---|---|
| | | < RESISTOR > | | | |
| R1280 | 1-257-173-91 | METAL CHIP | 560 | 5% | 1/3W |
| ********** | | | | | |
| | A-1820-978-A | DAMP BOARD, COMPLETE (E2, E51, MX, MY) | | | |
| | A-1842-418-A | DAMP BOARD, COMPLETE (SAF, EA) | | | |
| | | ********** | | | |
| | | < CAPACITOR > | | | |
| C1400 | 1-126-935-11 | ELECT | 470uF | 20% | 16V |
| C1401 | 1-126-948-11 | ELECT | 100uF | 20% | 35V |
| C1402 | 1-126-948-11 | ELECT | 100uF | 20% | 35V |
| C1405 | 1-126-947-11 | ELECT | 47uF | 20% | 35V |
| C1406 | 1-126-947-11 | ELECT | 47uF | 20% | 35V |
| C1407 | 1-137-909-91 | CERAMIC CHIP | 0.22uF | 10% | 35V |
| C1408 | 1-137-909-91 | CERAMIC CHIP | 0.22uF | 10% | 35V |
| C1409 | 1-126-964-11 | ELECT | 10uF | 20% | 50V |
| C1410 | 1-126-964-11 | ELECT | 10uF | 20% | 50V |
| C1411 | 1-126-964-11 | ELECT | 10uF | 20% | 50V |
| C1412 | 1-126-964-11 | ELECT | 10uF | 20% | 50V |
| C1413 | 1-126-964-11 | ELECT | 10uF | 20% | 50V |
| C1414 | 1-126-964-11 | ELECT | 10uF | 20% | 50V |
| C1415 | 1-126-964-11 | ELECT | 10uF | 20% | 50V |
| C1416 | 1-126-964-11 | ELECT | 10uF | 20% | 50V |
| C1424 | 1-127-813-11 | ELECT (BLOCK) | 3300uF | 20% | 71V |
| C1425 | 1-127-813-11 | ELECT (BLOCK) | 3300uF | 20% | 71V |
| C1429 | 1-126-964-11 | ELECT | 10uF | 20% | 50V |
| C1430 | 1-126-964-11 | ELECT | 10uF | 20% | 50V |
| C1431 | 1-127-813-11 | ELECT (BLOCK) | 3300uF | 20% | 71V |
| C1432 | 1-127-813-11 | ELECT (BLOCK) | 3300uF | 20% | 71V |
| C1435 | 1-100-597-91 | CERAMIC CHIP | 0.1uF | 10% | 25V |
| C1436 | 1-126-923-91 | ELECT | 220uF | 20% | 10V |
| C1437 | 1-126-923-91 | ELECT | 220uF | 20% | 10V |
| C1439 | 1-100-597-91 | CERAMIC CHIP | 0.1uF | 10% | 25V |
| C1440 | 1-100-597-91 | CERAMIC CHIP | 0.1uF | 10% | 25V |
| C1441 | 1-100-597-91 | CERAMIC CHIP | 0.1uF | 10% | 25V |
| C1442 | 1-137-909-91 | CERAMIC CHIP | 0.22uF | 10% | 35V |
| C1450 | 1-126-947-11 | ELECT | 47uF | 20% | 35V |
| C1456 | 1-162-919-11 | CERAMIC CHIP | 22PF | 5% | 50V |
| C1457 | 1-162-919-11 | CERAMIC CHIP | 22PF | 5% | 50V |
| C1458 | 1-162-919-11 | CERAMIC CHIP | 22PF | 5% | 50V |
| C1459 | 1-162-919-11 | CERAMIC CHIP | 22PF | 5% | 50V |
| C1460 | 1-126-964-11 | ELECT | 10uF | 20% | 50V |
| C1461 | 1-126-964-11 | ELECT | 10uF | 20% | 50V |
| C1462 | 1-126-964-11 | ELECT | 10uF | 20% | 50V |
| C1463 | 1-126-964-11 | ELECT | 10uF | 20% | 50V |
| C1468 | 1-165-895-91 | CERAMIC CHIP | 0.1uF | 10% | 50V |
| C1469 | 1-100-436-91 | CERAMIC CHIP | 0.033uF | 10% | 25V |
| C1470 | 1-165-895-91 | CERAMIC CHIP | 0.1uF | 10% | 50V |
| C1471 | 1-100-436-91 | CERAMIC CHIP | 0.033uF | 10% | 25V |
| C1473 | 1-100-597-91 | CERAMIC CHIP | 0.1uF | 10% | 25V |
| C1474 | 1-124-779-00 | ELECT CHIP | 10uF | 20% | 16V |
| C1475 | 1-124-779-00 | ELECT CHIP | 10uF | 20% | 16V |
| C1476 | 1-124-779-00 | ELECT CHIP | 10uF | 20% | 16V |
| C1477 | 1-124-779-00 | ELECT CHIP | 10uF | 20% | 16V |
| C1478 | 1-124-779-00 | ELECT CHIP | 10uF | 20% | 16V |
| C1479 | 1-124-779-00 | ELECT CHIP | 10uF | 20% | 16V |
| C1480 | 1-124-779-00 | ELECT CHIP | 10uF | 20% | 16V |
| C1481 | 1-124-779-00 | ELECT CHIP | 10uF | 20% | 16V |
| C1482 | 1-164-933-11 | CERAMIC CHIP | 220PF | 10% | 50V |
| C1483 | 1-164-933-11 | CERAMIC CHIP | 220PF | 10% | 50V |
| C1484 | 1-164-933-11 | CERAMIC CHIP | 220PF | 10% | 50V |
| C1485 | 1-164-933-11 | CERAMIC CHIP | 220PF | 10% | 50V |
| C1486 | 1-100-597-91 | CERAMIC CHIP | 0.1uF | 10% | 25V |
| C1487 | 1-112-514-91 | CERAMIC CHIP | 1500PF | 5% | 50V |
| C1488 | 1-112-514-91 | CERAMIC CHIP | 1500PF | 5% | 50V |
| C1489 | 1-112-514-91 | CERAMIC CHIP | 1500PF | 5% | 50V |
| C1490 | 1-112-514-91 | CERAMIC CHIP | 1500PF | 5% | 50V |
| C1491 | 1-162-964-11 | CERAMIC CHIP | 0.001uF | 10% | 50V |
| C1492 | 1-112-514-91 | CERAMIC CHIP | 1500PF | 5% | 50V |
| C1493 | 1-112-514-91 | CERAMIC CHIP | 1500PF | 5% | 50V |
| C1494 | 1-112-514-91 | CERAMIC CHIP | 1500PF | 5% | 50V |
| C1495 | 1-112-514-91 | CERAMIC CHIP | 1500PF | 5% | 50V |
| C1496 | 1-112-692-11 | CERAMIC CHIP | 1000PF | 5% | 50V |
| C1497 | 1-124-779-00 | ELECT CHIP | 10uF | 20% | 16V |
| C1498 | 1-112-692-11 | CERAMIC CHIP | 1000PF | 5% | 50V |
| C1499 | 1-124-779-00 | ELECT CHIP | 10uF | 20% | 16V |
| C1500 | 1-112-692-11 | CERAMIC CHIP | 1000PF | 5% | 50V |
| C1501 | 1-124-779-00 | ELECT CHIP | 10uF | 20% | 16V |
| C1502 | 1-112-692-11 | CERAMIC CHIP | 1000PF | 5% | 50V |
| C1503 | 1-124-779-00 | ELECT CHIP | 10uF | 20% | 16V |
| C1504 | 1-107-726-91 | CERAMIC CHIP | 0.01uF | 10% | 16V |
| C1505 | 1-107-726-91 | CERAMIC CHIP | 0.01uF | 10% | 16V |
| C1506 | 1-107-726-91 | CERAMIC CHIP | 0.01uF | 10% | 16V |
| C1507 | 1-107-726-91 | CERAMIC CHIP | 0.01uF | 10% | 16V |
| C1508 | 1-107-726-91 | CERAMIC CHIP | 0.01uF | 10% | 16V |
| C1509 | 1-107-726-91 | CERAMIC CHIP | 0.01uF | 10% | 16V |
| C1510 | 1-107-726-91 | CERAMIC CHIP | 0.01uF | 10% | 16V |
| C1511 | 1-107-726-91 | CERAMIC CHIP | 0.01uF | 10% | 16V |
| C1512 | 1-107-726-91 | CERAMIC CHIP | 0.01uF | 10% | 16V |
| C1513 | 1-107-726-91 | CERAMIC CHIP | 0.01uF | 10% | 16V |
| C1514 | 1-107-726-91 | CERAMIC CHIP | 0.01uF | 10% | 16V |
| C1515 | 1-107-726-91 | CERAMIC CHIP | 0.01uF | 10% | 16V |
| C1516 | 1-114-236-21 | CERAMIC CHIP | 22uF | 10% | 25V |
| C1517 | 1-114-236-21 | CERAMIC CHIP | 22uF | 10% | 25V |
| C1518 | 1-114-236-21 | CERAMIC CHIP | 22uF | 10% | 25V |
| C1519 | 1-114-236-21 | CERAMIC CHIP | 22uF | 10% | 25V |
| C1520 | 1-127-715-11 | CERAMIC CHIP | 0.22uF | 10% | 16V |
| C1521 | 1-127-715-11 | CERAMIC CHIP | 0.22uF | 10% | 16V |
| C1522 | 1-127-715-11 | CERAMIC CHIP | 0.22uF | 10% | 16V |
| C1523 | 1-127-715-11 | CERAMIC CHIP | 0.22uF | 10% | 16V |
| C1524 | 1-164-161-11 | CERAMIC CHIP | 0.0022uF | 10% | 100V |
| C1525 | 1-164-161-11 | CERAMIC CHIP | 0.0022uF | 10% | 100V |
| C1526 | 1-164-161-11 | CERAMIC CHIP | 0.0022uF | 10% | 100V |
| C1527 | 1-164-161-11 | CERAMIC CHIP | 0.0022uF | 10% | 100V |
| C1528 | 1-164-161-11 | CERAMIC CHIP | 0.0022uF | 10% | 100V |
| C1529 | 1-164-161-11 | CERAMIC CHIP | 0.0022uF | 10% | 100V |
| C1530 | 1-164-161-11 | CERAMIC CHIP | 0.0022uF | 10% | 100V |
| C1531 | 1-164-161-11 | CERAMIC CHIP | 0.0022uF | 10% | 100V |
| C1532 | 1-100-153-91 | CERAMIC CHIP | 220PF | 5% | 100V |
| C1533 | 1-100-153-91 | CERAMIC CHIP | 220PF | 5% | 100V |
| C1534 | 1-100-153-91 | CERAMIC CHIP | 220PF | 5% | 100V |
| C1535 | 1-100-153-91 | CERAMIC CHIP | 220PF | 5% | 100V |
| C1536 | 1-100-153-91 | CERAMIC CHIP | 220PF | 5% | 100V |
| C1537 | 1-100-153-91 | CERAMIC CHIP | 220PF | 5% | 100V |
| C1538 | 1-100-153-91 | CERAMIC CHIP | 220PF | 5% | 100V |
| C1539 | 1-100-153-91 | CERAMIC CHIP | 220PF | 5% | 100V |
| C1540 | 1-100-623-91 | CERAMIC CHIP | 0.1uF | 10% | 100V |
| C1541 | 1-100-623-91 | CERAMIC CHIP | 0.1uF | 10% | 100V |
| C1542 | 1-100-623-91 | CERAMIC CHIP | 0.1uF | 10% | 100V |

| Ref. No. | Part No. | Description | | | Remark |
|---|---|---|---|---|---|
| C1543 | 1-100-623-91 | CERAMIC CHIP | 0.1uF | 10% | 100V |
| C1544 | 1-100-623-91 | CERAMIC CHIP | 0.1uF | 10% | 100V |
| C1545 | 1-100-623-91 | CERAMIC CHIP | 0.1uF | 10% | 100V |
| C1546 | 1-100-623-91 | CERAMIC CHIP | 0.1uF | 10% | 100V |
| C1547 | 1-100-623-91 | CERAMIC CHIP | 0.1uF | 10% | 100V |
| C1556 | 1-126-960-11 | ELECT | 1uF | 20% | 50V |
| C1557 | 1-116-881-11 | FILM | 0.47uF | 5% | 250V (E2, E51, MX, MY) |
| C1558 | 1-126-960-11 | ELECT | 1uF | 20% | 50V |
| C1559 | 1-116-881-11 | FILM | 0.47uF | 5% | 250V (E2, E51, MX, MY) |
| C1562 | 1-126-960-11 | ELECT | 1uF | 20% | 50V |
| C1563 | 1-116-881-11 | FILM | 0.47uF | 5% | 250V (E2, E51, MX, MY) |
| C1564 | 1-126-960-11 | ELECT | 1uF | 20% | 50V |
| C1565 | 1-116-881-11 | FILM | 0.47uF | 5% | 250V (E2, E51, MX, MY) |
| C1566 | 1-114-754-91 | CERAMIC CHIP | 0.1uF | 10% | 250V |
| C1567 | 1-114-754-91 | CERAMIC CHIP | 0.1uF | 10% | 250V |
| C1568 | 1-114-754-91 | CERAMIC CHIP | 0.1uF | 10% | 250V |
| C1569 | 1-114-754-91 | CERAMIC CHIP | 0.1uF | 10% | 250V |
| C1572 | 1-126-964-11 | ELECT | 10uF | 20% | 50V |
| C1574 | 1-100-597-91 | CERAMIC CHIP | 0.1uF | 10% | 25V |
| C1578 | 1-127-820-11 | CERAMIC CHIP | 4.7uF | 10% | 16V |
| C1579 | 1-127-820-11 | CERAMIC CHIP | 4.7uF | 10% | 16V |
| C1580 | 1-100-597-91 | CERAMIC CHIP | 0.1uF | 10% | 25V |
| C1581 | 1-127-820-11 | CERAMIC CHIP | 4.7uF | 10% | 16V |
| C1582 | 1-127-820-11 | CERAMIC CHIP | 4.7uF | 10% | 16V |
| C1584 | 1-126-963-11 | ELECT | 4.7uF | 20% | 50V |
| C1585 | 1-162-964-11 | CERAMIC CHIP | 0.001uF | 10% | 50V |
| C1586 | 1-100-245-21 | CERAMIC CHIP | 0.001uF | 10% | 250V |
| C1587 | 1-100-245-21 | CERAMIC CHIP | 0.001uF | 10% | 250V |
| C1588 | 1-162-964-11 | CERAMIC CHIP | 0.001uF | 10% | 50V |
| C1589 | 1-162-964-11 | CERAMIC CHIP | 0.001uF | 10% | 50V |
| C1590 | 1-100-245-21 | CERAMIC CHIP | 0.001uF | 10% | 250V |
| C1591 | 1-100-245-21 | CERAMIC CHIP | 0.001uF | 10% | 250V |
| C1592 | 1-162-964-11 | CERAMIC CHIP | 0.001uF | 10% | 50V |
| C1605 | 1-126-964-11 | ELECT | 10uF | 20% | 50V |
| C1606 | 1-126-964-11 | ELECT | 10uF | 20% | 50V |
| C1607 | 1-126-964-11 | ELECT | 10uF | 20% | 50V |
| C1608 | 1-126-964-11 | ELECT | 10uF | 20% | 50V |
| C1614 | 1-164-935-11 | CERAMIC CHIP | 470PF | 10% | 50V |
| C1615 | 1-164-862-11 | CERAMIC CHIP | 33PF | 5% | 50V |
| C1616 | 1-100-623-91 | CERAMIC CHIP | 0.1uF | 10% | 100V |
| C1617 | 1-100-623-91 | CERAMIC CHIP | 0.1uF | 10% | 100V |
| C1618 | 1-107-826-11 | CERAMIC CHIP | 0.1uF | 10% | 16V |
| C1619 | 1-107-826-11 | CERAMIC CHIP | 0.1uF | 10% | 16V |
| C1620 | 1-100-597-91 | CERAMIC CHIP | 0.1uF | 10% | 25V |
| C1624 | 1-125-898-11 | CERAMIC CHIP | 0.22uF | 10% | 50V |
| C1626 | 1-125-898-11 | CERAMIC CHIP | 0.22uF | 10% | 50V |
| C1627 | 1-125-898-11 | CERAMIC CHIP | 0.22uF | 10% | 50V |
| C1628 | 1-125-898-11 | CERAMIC CHIP | 0.22uF | 10% | 50V |
| C1629 | 1-126-923-91 | ELECT | 220uF | 20% | 10V |
| C1634 | 1-100-565-91 | CERAMIC CHIP | 0.47uF | 10% | 35V (E2, E51, MX, MY) |
| C1635 | 1-162-970-11 | CERAMIC CHIP | 0.01uF | 10% | 25V |
| C1638 | 1-162-970-11 | CERAMIC CHIP | 0.01uF | 10% | 25V |
| C1639 | 1-162-970-11 | CERAMIC CHIP | 0.01uF | 10% | 25V |
| C1640 | 1-162-970-11 | CERAMIC CHIP | 0.01uF | 10% | 25V |
| C1643 | 1-100-597-91 | CERAMIC CHIP | 0.1uF | 10% | 25V |
| C1655 | 1-100-597-91 | CERAMIC CHIP | 0.1uF | 10% | 25V |
| C1656 | 1-100-597-91 | CERAMIC CHIP | 0.1uF | 10% | 25V |
| C1665 | 1-114-754-91 | MYLAR | 0.01uF | 5% | 250V |
| C1666 | 1-114-754-91 | MYLAR | 0.01uF | 5% | 250V |
| C1667 | 1-114-754-91 | MYLAR | 0.01uF | 5% | 250V |
| C1668 | 1-114-754-91 | MYLAR | 0.01uF | 5% | 250V |
| C1669 | 1-118-020-11 | FILM | 0.56uF | 5% | 250V (SAF, EA) |
| C1670 | 1-118-020-11 | FILM | 0.56uF | 5% | 250V (SAF, EA) |
| C1671 | 1-118-020-11 | FILM | 0.56uF | 5% | 250V (SAF, EA) |
| C1672 | 1-118-020-11 | FILM | 0.56uF | 5% | 250V (SAF, EA) |
| C1673 | 1-126-947-11 | ELECT | 47uF | 20% | 35V |
| | | < CONNECTOR > | | | |
| CN1400 | 1-842-784-11 | CONNECTOR, BOARD TO BOARD 14P | | | |
| CN1401 | 1-842-784-11 | CONNECTOR, BOARD TO BOARD 14P | | | |
| * CN1404 | 1-564-506-11 | PLUG, CONNECTOR 3P | | | |
| * CN1405 | 1-564-506-11 | PLUG, CONNECTOR 3P | | | |
| | | < DIODE > | | | |
| D1406 | 6-502-976-01 | DI DZ2J150M0L | | | |
| D1407 | 6-502-976-01 | DI DZ2J150M0L | | | |
| D1408 | 6-502-970-01 | DI DZ2J068M0L | | | |
| D1409 | 6-502-970-01 | DI DZ2J068M0L | | | |
| D1410 | 6-502-966-01 | DI DZ2J056M0L | | | |
| D1411 | 6-502-966-01 | DI DZ2J056M0L | | | |
| D1412 | 6-503-042-01 | DI DZ2J330M0L | | | |
| D1413 | 6-502-974-01 | DI DZ2J140M0L | | | |
| D1414 | 6-500-334-01 | DIODE MC2836-T112-1 | | | |
| D1415 | 6-502-961-01 | DI DA2J10100L | | | |
| D1417 | 6-502-961-01 | DI DA2J10100L | | | |
| D1418 | 6-502-961-01 | DI DA2J10100L | | | |
| D1419 | 6-502-961-01 | DI DA2J10100L | | | |
| D1420 | 6-502-961-01 | DI DA2J10100L | | | |
| D1421 | 6-503-469-01 | DI RF05VA2STR | | | |
| D1422 | 6-503-469-01 | DI RF05VA2STR | | | |
| D1423 | 6-503-469-01 | DI RF05VA2STR | | | |
| D1424 | 6-503-469-01 | DI RF05VA2STR | | | |
| D1425 | 6-503-469-01 | DI RF05VA2STR | | | |
| D1426 | 6-503-469-01 | DI RF05VA2STR | | | |
| D1427 | 6-503-469-01 | DI RF05VA2STR | | | |
| D1428 | 6-503-469-01 | DI RF05VA2STR | | | |
| D1430 | 6-500-335-01 | DIODE MC2838-T112-1 | | | |
| D1431 | 6-503-469-01 | DI RF05VA2STR | | | |
| D1432 | 6-503-469-01 | DI RF05VA2STR | | | |
| D1433 | 6-503-469-01 | DI RF05VA2STR | | | |
| D1434 | 6-503-469-01 | DI RF05VA2STR | | | |
| D1435 | 6-500-335-01 | DIODE MC2838-T112-1 | | | |
| D1438 | 6-502-967-01 | DI DZ2J06200L | | | |
| D1439 | 6-502-970-01 | DI DZ2J068M0L | | | |
| D1442 | 6-500-335-01 | DIODE MC2838-T112-1 | | | |
| D1443 | 6-500-334-01 | DIODE MC2836-T112-1 | | | |
| D1444 | 6-502-961-01 | DI DA2J10100L | | | |
| D1448 | 6-500-335-01 | DIODE MC2838-T112-1 | | | |
| D1449 | 6-500-334-01 | DIODE MC2836-T112-1 | | | |
| D1450 | 6-502-961-01 | DI DA2J10100L | | | |
| D1451 | 6-502-961-01 | DI DA2J10100L | | | |
| D1452 | 6-502-961-01 | DI DA2J10100L | | | |
| D1453 | 6-502-961-01 | DI DA2J10100L | | | |

| Ref. No. | Part No. | Description | Remark |
|---|---|---|---|
| | | < IC > | |
| IC1400 | 8-759-982-17 | IC RC7818FA | |
| IC1401 | 8-759-982-42 | IC RC7918FA | |
| IC1402 | 6-717-191-01 | IC KIA7812AF-RTF/PW | |
| IC1403 | 8-759-394-76 | IC NJM2068M-D-TE2 | |
| IC1404 | 8-759-394-76 | IC NJM2068M-D-TE2 | |
| IC1405 | 8-759-338-95 | IC NJM2903V (TE2) | |
| IC1406 | 6-716-579-01 | IC IRS2092STRPBF | |
| IC1407 | 6-716-579-01 | IC IRS2092STRPBF | |
| IC1408 | 6-716-579-01 | IC IRS2092STRPBF | |
| IC1409 | 6-716-579-01 | IC IRS2092STRPBF | |
| IC1410 | 6-717-488-01 | IC BA4580RF-E2 | |
| IC1411 | 6-717-488-01 | IC BA4580RF-E2 | |
| | | < COIL > | |
| L1400 | 1-481-819-11 | INDUCTOR 22uH | |
| L1401 | 1-481-819-11 | INDUCTOR 22uH | |
| L1402 | 1-481-819-11 | INDUCTOR 22uH | |
| L1403 | 1-481-819-11 | INDUCTOR 22uH | |
| L1404 | 1-457-078-11 | AIR-CORE COIL | |
| L1405 | 1-457-078-11 | AIR-CORE COIL | |
| L1406 | 1-457-078-11 | AIR-CORE COIL | |
| L1407 | 1-457-078-11 | AIR-CORE COIL | |
| L1408 | 1-414-406-11 | INDUCTOR 220uH | |
| | | < TRANSISTOR > | |
| Q1400 | 8-729-036-86 | TRANSISTOR KTC3203Y-AT | |
| Q1401 | 6-551-268-01 | TRANSISTOR 2SC5625 | |
| Q1402 | 6-551-690-01 | TRANSISTOR RT3N11M-TP-1 | |
| Q1403 | 6-552-812-01 | TR KTC1027-Y-AT/P | |
| Q1404 | 6-552-810-01 | TR KTA1023-Y-AT/P | |
| Q1405 | 6-551-690-01 | TRANSISTOR RT3N11M-TP-1 | |
| Q1407 | 6-551-693-01 | TRANSISTOR RT3T11M-TP-1 | |
| Q1410 | 6-551-699-01 | TR ISA1602AM1-T111-1EF | |
| Q1411 | 6-551-699-01 | TR ISA1602AM1-T111-1EF | |
| Q1412 | 6-551-699-01 | TR ISA1602AM1-T111-1EF | |
| Q1413 | 6-551-699-01 | TR ISA1602AM1-T111-1EF | |
| Q1414 | 6-551-272-01 | TRANSISTOR RT3CLLM | |
| Q1415 | 6-551-272-01 | TRANSISTOR RT3CLLM | |
| Q1416 | 6-551-272-01 | TRANSISTOR RT3CLLM | |
| Q1417 | 6-551-272-01 | TRANSISTOR RT3CLLM | |
| Q1418 | 6-552-698-01 | TR IRF6775MTR1PBF | |
| Q1419 | 6-552-698-01 | TR IRF6775MTR1PBF | |
| Q1420 | 6-552-698-01 | TR IRF6775MTR1PBF | |
| Q1421 | 6-552-698-01 | TR IRF6775MTR1PBF | |
| Q1422 | 6-552-698-01 | TR IRF6775MTR1PBF | |
| Q1423 | 6-552-698-01 | TR IRF6775MTR1PBF | |
| Q1424 | 6-552-698-01 | TR IRF6775MTR1PBF | |
| Q1425 | 6-552-698-01 | TR IRF6775MTR1PBF | |
| Q1426 | 8-729-620-07 | TRANSISTOR 2SC3052EF-T1-LEF | |
| Q1427 | 8-729-620-07 | TRANSISTOR 2SC3052EF-T1-LEF | |
| Q1428 | 8-729-620-07 | TRANSISTOR 2SC3052EF-T1-LEF | |
| Q1429 | 8-729-620-07 | TRANSISTOR 2SC3052EF-T1-LEF | |
| Q1430 | 6-551-270-01 | TRANSISTOR 2SA2026 | |
| Q1431 | 6-551-270-01 | TRANSISTOR 2SA2026 | |
| Q1432 | 6-551-270-01 | TRANSISTOR 2SA2026 | |
| Q1433 | 6-551-270-01 | TRANSISTOR 2SA2026 | |
| Q1439 | 8-729-620-07 | TRANSISTOR 2SC3052EF-T1-LEF | |
| Q1441 | 8-729-036-86 | TRANSISTOR KTC3203Y-AT | |
| Q1443 | 8-729-620-07 | TRANSISTOR 2SC3052EF-T1-LEF | |

| Ref. No. | Part No. | Description | Remark |
|---|---|---|---|
| Q1444 | 8-729-620-07 | TRANSISTOR 2SC3052EF-T1-LEF | |
| Q1445 | 8-729-620-07 | TRANSISTOR 2SC3052EF-T1-LEF | |
| Q1446 | 8-729-620-07 | TRANSISTOR 2SC3052EF-T1-LEF | |
| Q1447 | 8-729-620-07 | TRANSISTOR 2SC3052EF-T1-LEF | |
| Q1448 | 6-551-699-01 | TR ISA1602AM1-T111-1EF | |
| Q1449 | 8-729-038-23 | TRANSISTOR RT1N141C-TP-1 | |
| Q1451 | 6-552-681-01 | TR RT3NDDM-T111-1 | |
| Q1453 | 8-729-027-23 | TRANSISTOR DTA114EKA-T146 | |
| Q1454 | 8-729-620-07 | TRANSISTOR 2SC3052EF-T1-LEF | |
| Q1455 | 8-729-620-07 | TRANSISTOR 2SC3052EF-T1-LEF | |
| Q1456 | 8-729-620-07 | TRANSISTOR 2SC3052EF-T1-LEF | |
| Q1457 | 8-729-620-07 | TRANSISTOR 2SC3052EF-T1-LEF | |
| Q1458 | 8-729-027-23 | TRANSISTOR DTA114EKA-T146 | |
| Q1460 | 8-729-027-23 | TRANSISTOR DTA114EKA-T146 | |
| Q1469 | 6-551-268-01 | TRANSISTOR 2SC5625 | |
| Q1470 | 8-729-027-23 | TRANSISTOR DTA114EKA-T146 | |
| Q1475 | 8-729-038-23 | TRANSISTOR RT1N141C-TP-1 | |
| Q1476 | 8-729-036-86 | TRANSISTOR KTC3203Y-AT | |
| | | < RESISTOR > | |
| R1409 | 1-216-845-11 | METAL CHIP 100K 5% 1/10W | |
| R1410 | 1-216-845-11 | METAL CHIP 100K 5% 1/10W | |
| R1412 | 1-216-845-11 | METAL CHIP 100K 5% 1/10W | |
| R1413 | 1-216-845-11 | METAL CHIP 100K 5% 1/10W | |
| R1426 | 1-227-869-21 | METAL CHIP 100 5% 1/2W | |
| R1429 | 1-227-869-21 | METAL CHIP 100 5% 1/2W | |
| R1430 | 1-215-892-11 | METAL OXIDE 1K 5% 2W | |
| R1435 | 1-216-833-11 | METAL CHIP 10K 5% 1/10W | |
| R1436 | 1-216-833-11 | METAL CHIP 10K 5% 1/10W | |
| R1437 | 1-216-833-11 | METAL CHIP 10K 5% 1/10W | |
| R1438 | 1-216-833-11 | METAL CHIP 10K 5% 1/10W | |
| R1439 | 1-216-838-11 | METAL CHIP 27K 5% 1/10W | |
| R1440 | 1-216-838-11 | METAL CHIP 27K 5% 1/10W | |
| R1441 | 1-216-838-11 | METAL CHIP 27K 5% 1/10W | |
| R1442 | 1-216-838-11 | METAL CHIP 27K 5% 1/10W | |
| R1443 | 1-216-846-11 | METAL CHIP 120K 5% 1/10W | |
| R1444 | 1-216-846-11 | METAL CHIP 120K 5% 1/10W | |
| R1445 | 1-216-845-11 | METAL CHIP 100K 5% 1/10W | |
| R1446 | 1-216-845-11 | METAL CHIP 100K 5% 1/10W | |
| R1447 | 1-216-845-11 | METAL CHIP 100K 5% 1/10W | |
| R1448 | 1-216-845-11 | METAL CHIP 100K 5% 1/10W | |
| R1449 | 1-216-845-11 | METAL CHIP 100K 5% 1/10W | |
| R1450 | 1-216-845-11 | METAL CHIP 100K 5% 1/10W | |
| R1451 | 1-218-990-81 | SHORT CHIP 0 | |
| R1457 | 1-216-821-11 | METAL CHIP 1K 5% 1/10W | |
| R1458 | 1-216-809-11 | METAL CHIP 100 5% 1/10W | |
| R1459 | 1-216-809-11 | METAL CHIP 100 5% 1/10W | |
| R1460 | 1-216-809-11 | METAL CHIP 100 5% 1/10W | |
| R1461 | 1-216-809-11 | METAL CHIP 100 5% 1/10W | |
| R1462 | 1-216-793-11 | METAL CHIP 4.7 5% 1/10W | |
| R1463 | 1-216-793-11 | METAL CHIP 4.7 5% 1/10W | |
| R1464 | 1-216-793-11 | METAL CHIP 4.7 5% 1/10W | |
| R1465 | 1-216-793-11 | METAL CHIP 4.7 5% 1/10W | |
| R1468 | 1-216-793-11 | METAL CHIP 4.7 5% 1/10W | |
| R1469 | 1-216-793-11 | METAL CHIP 4.7 5% 1/10W | |
| R1470 | 1-216-793-11 | METAL CHIP 4.7 5% 1/10W | |
| R1471 | 1-216-793-11 | METAL CHIP 4.7 5% 1/10W | |
| R1473 | 1-218-965-11 | METAL CHIP 10K 5% 1/16W | |
| R1474 | 1-208-699-11 | METAL CHIP 4.7K 0.5% 1/16W | |
| R1475 | 1-216-833-11 | METAL CHIP 10K 5% 1/10W | |

| Ref. No. | Part No. | Description | | | Remark |
|---|---|---|---|---|---|
| R1476 | 1-216-833-11 | METAL CHIP | 10K | 5% | 1/10W |
| R1477 | 1-216-833-11 | METAL CHIP | 10K | 5% | 1/10W |
| R1478 | 1-216-833-11 | METAL CHIP | 10K | 5% | 1/10W |
| R1480 | 1-218-847-11 | METAL CHIP | 1K | 0.5% | 1/10W |
| R1481 | 1-216-833-11 | METAL CHIP | 10K | 5% | 1/10W |
| R1482 | 1-216-833-11 | METAL CHIP | 10K | 5% | 1/10W |
| R1483 | 1-216-833-11 | METAL CHIP | 10K | 5% | 1/10W |
| R1484 | 1-216-833-11 | METAL CHIP | 10K | 5% | 1/10W |
| R1485 | 1-216-827-11 | METAL CHIP | 3.3K | 5% | 1/10W |
| R1486 | 1-218-981-91 | METAL CHIP | 220K | 5% | 1/16W |
| R1487 | 1-216-827-11 | METAL CHIP | 3.3K | 5% | 1/10W |
| R1488 | 1-218-981-91 | METAL CHIP | 220K | 5% | 1/16W |
| R1489 | 1-216-827-11 | METAL CHIP | 3.3K | 5% | 1/10W |
| R1490 | 1-218-981-91 | METAL CHIP | 220K | 5% | 1/16W |
| R1491 | 1-216-827-11 | METAL CHIP | 3.3K | 5% | 1/10W |
| R1492 | 1-218-981-91 | METAL CHIP | 220K | 5% | 1/16W |
| R1494 | 1-216-825-11 | METAL CHIP | 2.2K | 5% | 1/10W |
| R1495 | 1-216-825-11 | METAL CHIP | 2.2K | 5% | 1/10W |
| R1496 | 1-216-825-11 | METAL CHIP | 2.2K | 5% | 1/10W |
| R1497 | 1-216-825-11 | METAL CHIP | 2.2K | 5% | 1/10W |
| R1498 | 1-216-837-11 | METAL CHIP | 22K | 5% | 1/10W |
| R1499 | 1-216-837-11 | METAL CHIP | 22K | 5% | 1/10W |
| R1500 | 1-216-837-11 | METAL CHIP | 22K | 5% | 1/10W |
| R1501 | 1-216-837-11 | METAL CHIP | 22K | 5% | 1/10W |
| R1502 | 1-216-841-11 | METAL CHIP | 47K | 5% | 1/10W |
| R1503 | 1-216-841-11 | METAL CHIP | 47K | 5% | 1/10W |
| R1504 | 1-216-841-11 | METAL CHIP | 47K | 5% | 1/10W |
| R1505 | 1-216-841-11 | METAL CHIP | 47K | 5% | 1/10W |
| R1506 | 1-208-671-11 | METAL CHIP | 330 | 0.5% | 1/16W |
| R1507 | 1-208-671-11 | METAL CHIP | 330 | 0.5% | 1/16W |
| R1508 | 1-208-671-11 | METAL CHIP | 330 | 0.5% | 1/16W |
| R1509 | 1-208-671-11 | METAL CHIP | 330 | 0.5% | 1/16W |
| R1510 | 1-248-057-81 | METAL CHIP | 1K | 0.5% | 1/16W |
| R1511 | 1-248-057-81 | METAL CHIP | 1K | 0.5% | 1/16W |
| R1512 | 1-248-057-81 | METAL CHIP | 1K | 0.5% | 1/16W |
| R1513 | 1-248-057-81 | METAL CHIP | 1K | 0.5% | 1/16W |
| R1514 | 1-208-905-11 | METAL CHIP | 5.6K | 0.5% | 1/16W |
| R1515 | 1-218-958-11 | METAL CHIP | 2.7K | 5% | 1/16W |
| R1516 | 1-208-905-11 | METAL CHIP | 5.6K | 0.5% | 1/16W |
| R1517 | 1-218-958-11 | METAL CHIP | 2.7K | 5% | 1/16W |
| R1518 | 1-208-905-11 | METAL CHIP | 5.6K | 0.5% | 1/16W |
| R1519 | 1-218-958-11 | METAL CHIP | 2.7K | 5% | 1/16W |
| R1520 | 1-208-905-11 | METAL CHIP | 5.6K | 0.5% | 1/16W |
| R1521 | 1-218-958-11 | METAL CHIP | 2.7K | 5% | 1/16W |
| R1522 | 1-208-699-11 | METAL CHIP | 4.7K | 0.5% | 1/16W |
| R1523 | 1-208-905-11 | METAL CHIP | 5.6K | 0.5% | 1/16W |
| R1524 | 1-218-971-11 | METAL CHIP | 33K | 5% | 1/16W |
| R1525 | 1-208-699-11 | METAL CHIP | 4.7K | 0.5% | 1/16W |
| R1526 | 1-208-905-11 | METAL CHIP | 5.6K | 0.5% | 1/16W |
| R1527 | 1-218-971-11 | METAL CHIP | 33K | 5% | 1/16W |
| R1528 | 1-208-699-11 | METAL CHIP | 4.7K | 0.5% | 1/16W |
| R1529 | 1-208-905-11 | METAL CHIP | 5.6K | 0.5% | 1/16W |
| R1530 | 1-218-971-11 | METAL CHIP | 33K | 5% | 1/16W |
| R1531 | 1-208-699-11 | METAL CHIP | 4.7K | 0.5% | 1/16W |
| R1532 | 1-208-905-11 | METAL CHIP | 5.6K | 0.5% | 1/16W |
| R1533 | 1-218-971-11 | METAL CHIP | 33K | 5% | 1/16W |
| R1534 | 1-218-869-11 | METAL CHIP | 8.2K | 0.5% | 1/10W |
| R1535 | 1-208-695-11 | METAL CHIP | 3.3K | 0.5% | 1/16W |
| R1536 | 1-218-869-11 | METAL CHIP | 8.2K | 0.5% | 1/10W |
| R1537 | 1-208-695-11 | METAL CHIP | 3.3K | 0.5% | 1/16W |
| R1538 | 1-218-869-11 | METAL CHIP | 8.2K | 0.5% | 1/10W |
| R1539 | 1-208-695-11 | METAL CHIP | 3.3K | 0.5% | 1/16W |
| R1540 | 1-218-869-11 | METAL CHIP | 8.2K | 0.5% | 1/10W |
| R1541 | 1-208-695-11 | METAL CHIP | 3.3K | 0.5% | 1/16W |
| R1542 | 1-218-965-11 | METAL CHIP | 10K | 5% | 1/16W |
| R1543 | 1-218-965-11 | METAL CHIP | 10K | 5% | 1/16W |
| R1544 | 1-218-965-11 | METAL CHIP | 10K | 5% | 1/16W |
| R1545 | 1-218-965-11 | METAL CHIP | 10K | 5% | 1/16W |
| R1546 | 1-216-839-11 | METAL CHIP | 33K | 5% | 1/10W |
| R1547 | 1-216-839-11 | METAL CHIP | 33K | 5% | 1/10W |
| R1548 | 1-218-977-11 | METAL CHIP | 100K | 5% | 1/16W |
| R1549 | 1-216-839-11 | METAL CHIP | 33K | 5% | 1/10W |
| R1550 | 1-218-977-11 | METAL CHIP | 100K | 5% | 1/16W |
| R1551 | 1-216-839-11 | METAL CHIP | 33K | 5% | 1/10W |
| R1554 | 1-216-793-11 | METAL CHIP | 4.7 | 5% | 1/10W |
| R1555 | 1-216-793-11 | METAL CHIP | 4.7 | 5% | 1/10W |
| R1556 | 1-216-793-11 | METAL CHIP | 4.7 | 5% | 1/10W |
| R1557 | 1-216-793-11 | METAL CHIP | 4.7 | 5% | 1/10W |
| R1558 | 1-216-797-11 | METAL CHIP | 10 | 5% | 1/10W |
| R1559 | 1-216-797-11 | METAL CHIP | 10 | 5% | 1/10W |
| R1560 | 1-216-797-11 | METAL CHIP | 10 | 5% | 1/10W |
| R1561 | 1-216-797-11 | METAL CHIP | 10 | 5% | 1/10W |
| R1562 | 1-208-699-11 | METAL CHIP | 4.7K | 0.5% | 1/16W |
| R1563 | 1-208-699-11 | METAL CHIP | 4.7K | 0.5% | 1/16W |
| R1564 | 1-208-699-11 | METAL CHIP | 4.7K | 0.5% | 1/16W |
| R1565 | 1-208-699-11 | METAL CHIP | 4.7K | 0.5% | 1/16W |
| R1566 | 1-216-801-11 | METAL CHIP | 22 | 5% | 1/10W |
| R1567 | 1-216-801-11 | METAL CHIP | 22 | 5% | 1/10W |
| R1568 | 1-216-801-11 | METAL CHIP | 22 | 5% | 1/10W |
| R1569 | 1-216-801-11 | METAL CHIP | 22 | 5% | 1/10W |
| R1570 | 1-216-801-11 | METAL CHIP | 22 | 5% | 1/10W |
| R1571 | 1-216-801-11 | METAL CHIP | 22 | 5% | 1/10W |
| R1572 | 1-216-801-11 | METAL CHIP | 22 | 5% | 1/10W |
| R1573 | 1-216-801-11 | METAL CHIP | 22 | 5% | 1/10W |
| R1574 | 1-216-797-11 | METAL CHIP | 10 | 5% | 1/10W |
| R1575 | 1-216-797-11 | METAL CHIP | 10 | 5% | 1/10W |
| R1576 | 1-216-797-11 | METAL CHIP | 10 | 5% | 1/10W |
| R1577 | 1-216-797-11 | METAL CHIP | 10 | 5% | 1/10W |
| R1578 | 1-250-312-21 | METAL CHIP | 10 | 5% | 1/2W |
| R1579 | 1-250-312-21 | METAL CHIP | 10 | 5% | 1/2W |
| R1580 | 1-250-312-21 | METAL CHIP | 10 | 5% | 1/2W |
| R1581 | 1-250-312-21 | METAL CHIP | 10 | 5% | 1/2W |
| R1582 | 1-216-845-11 | METAL CHIP | 100K | 5% | 1/10W |
| R1583 | 1-216-821-11 | METAL CHIP | 1K | 5% | 1/10W |
| R1584 | 1-216-845-11 | METAL CHIP | 100K | 5% | 1/10W |
| R1585 | 1-216-845-11 | METAL CHIP | 100K | 5% | 1/10W |
| R1586 | 1-216-845-11 | METAL CHIP | 100K | 5% | 1/10W |
| R1587 | 1-216-821-11 | METAL CHIP | 1K | 5% | 1/10W |
| R1588 | 1-216-821-11 | METAL CHIP | 1K | 5% | 1/10W |
| R1589 | 1-216-821-11 | METAL CHIP | 1K | 5% | 1/10W |
| R1592 | 1-257-172-91 | METAL CHIP | 100 | 5% | 1/3W |
| R1594 | 1-257-172-91 | METAL CHIP | 100 | 5% | 1/3W |
| R1595 | 1-216-809-11 | METAL CHIP | 100 | 5% | 1/10W |
| R1599 | 1-216-809-11 | METAL CHIP | 100 | 5% | 1/10W |
| R1600 | 1-216-809-11 | METAL CHIP | 100 | 5% | 1/10W |
| R1601 | 1-216-809-11 | METAL CHIP | 100 | 5% | 1/10W |
| R1602 | 1-216-222-00 | RES-CHIP | 10K | 0.5% | 1/8W |
| R1603 | 1-216-222-00 | RES-CHIP | 10K | 0.5% | 1/8W |
| R1604 | 1-216-222-00 | RES-CHIP | 10K | 0.5% | 1/8W |
| R1607 | 1-216-845-11 | METAL CHIP | 100K | 5% | 1/10W |

| Ref. No. | Part No. | Description | | | Remark |
|---|---|---|---|---|---|
| R1608 | 1-216-845-11 | METAL CHIP | 100K | 5% | 1/10W |
| R1610 | 1-216-222-00 | RES-CHIP | 10K | 0.5% | 1/8W |
| R1611 | 1-216-222-00 | RES-CHIP | 10K | 0.5% | 1/8W |
| R1612 | 1-216-222-00 | RES-CHIP | 10K | 0.5% | 1/8W |
| R1613 | 1-216-222-00 | RES-CHIP | 10K | 0.5% | 1/8W |
| R1614 | 1-216-222-00 | RES-CHIP | 10K | 0.5% | 1/8W |
| R1618 | 1-216-833-11 | METAL CHIP | 10K | 5% | 1/10W |
| R1619 | 1-216-843-11 | METAL CHIP | 68K | 5% | 1/10W |
| R1620 | 1-216-833-11 | METAL CHIP | 10K | 5% | 1/10W |
| R1621 | 1-216-843-11 | METAL CHIP | 68K | 5% | 1/10W |
| R1622 | 1-216-833-11 | METAL CHIP | 10K | 5% | 1/10W |
| R1625 | 1-216-821-11 | METAL CHIP | 1K | 5% | 1/10W |
| R1630 | 1-216-829-11 | METAL CHIP | 4.7K | 5% | 1/10W |
| R1638 | 1-216-822-11 | METAL CHIP | 1.2K | 5% | 1/10W |
| R1642 | 1-216-851-11 | METAL CHIP | 330K | 5% | 1/10W |
| R1643 | 1-216-851-11 | METAL CHIP | 330K | 5% | 1/10W |
| R1644 | 1-216-851-11 | METAL CHIP | 330K | 5% | 1/10W |
| R1645 | 1-216-851-11 | METAL CHIP | 330K | 5% | 1/10W |
| R1647 | 1-216-821-11 | METAL CHIP | 1K | 5% | 1/10W |
| R1652 | 1-216-796-11 | METAL CHIP | 8.2 | 5% | 1/10W |
| R1654 | 1-216-841-11 | METAL CHIP | 47K | 5% | 1/10W |
| R1655 | 1-216-796-11 | METAL CHIP | 8.2 | 5% | 1/10W |
| R1657 | 1-216-845-11 | METAL CHIP | 100K | 5% | 1/10W |
| R1660 | 1-216-838-11 | METAL CHIP | 27K | 5% | 1/10W |
| R1661 | 1-216-838-11 | METAL CHIP | 27K | 5% | 1/10W |
| R1662 | 1-208-691-11 | METAL CHIP | 2.2K | 0.5% | 1/16W |
| R1663 | 1-208-691-11 | METAL CHIP | 2.2K | 0.5% | 1/16W |
| R1664 | 1-208-691-11 | METAL CHIP | 2.2K | 0.5% | 1/16W |
| R1665 | 1-208-691-11 | METAL CHIP | 2.2K | 0.5% | 1/16W |
| R1667 | 1-216-845-11 | METAL CHIP | 100K | 5% | 1/10W |
| R1668 | 1-216-845-11 | METAL CHIP | 100K | 5% | 1/10W |
| R1669 | 1-216-845-11 | METAL CHIP | 100K | 5% | 1/10W |
| R1670 | 1-216-845-11 | METAL CHIP | 100K | 5% | 1/10W |
| R1671 | 1-216-845-11 | METAL CHIP | 100K | 5% | 1/10W |
| R1672 | 1-215-892-11 | METAL OXIDE | 1K | 5% | 2W |
| R1673 | 1-216-809-11 | METAL CHIP | 100 | 5% | 1/10W |
| R1676 | 1-215-892-11 | METAL OXIDE | 1K | 5% | 2W |
| R1679 | 1-216-845-11 | METAL CHIP | 100K | 5% | 1/10W |
| R1680 | 1-216-833-11 | METAL CHIP | 10K | 5% | 1/10W |
| R1681 | 1-216-833-11 | METAL CHIP | 10K | 5% | 1/10W |
| R1682 | 1-216-843-11 | METAL CHIP | 68K | 5% | 1/10W |
| R1683 | 1-216-843-11 | METAL CHIP | 68K | 5% | 1/10W |
| R1684 | 1-216-864-11 | SHORT CHIP | 0 | | |
| R1685 | 1-216-864-11 | SHORT CHIP | 0 | | |
| R1686 | 1-216-864-11 | SHORT CHIP | 0 | | |
| R1687 | 1-216-864-11 | SHORT CHIP | 0 | | |
| R1688 | 1-216-833-11 | METAL CHIP | 10K | 5% | 1/10W |
| R1689 | 1-216-833-11 | METAL CHIP | 10K | 5% | 1/10W |
| R1690 | 1-216-833-11 | METAL CHIP | 10K | 5% | 1/10W |
| R1691 | 1-216-833-11 | METAL CHIP | 10K | 5% | 1/10W |
| R1693 | 1-227-869-21 | METAL CHIP | 100 | 5% | 1/2W |
| R1694 | 1-227-869-21 | METAL CHIP | 100 | 5% | 1/2W |
| R1698 | 1-216-864-11 | SHORT CHIP | 0 | | |
| R1701 | 1-216-864-11 | SHORT CHIP | 0 | | |
| R1704 | 1-216-842-11 | METAL CHIP | 56K | 5% | 1/10W |
| R1705 | 1-216-845-11 | METAL CHIP | 100K | 5% | 1/10W |
| R1706 | 1-216-842-11 | METAL CHIP | 56K | 5% | 1/10W |
| R1707 | 1-216-845-11 | METAL CHIP | 100K | 5% | 1/10W |
| R1708 | 1-216-837-11 | METAL CHIP | 22K | 5% | 1/10W |
| R1709 | 1-216-847-11 | METAL CHIP | 150K | 5% | 1/10W |

| Ref. No. | Part No. | Description | | | Remark |
|---|---|---|---|---|---|
| R1710 | 1-216-837-11 | METAL CHIP | 22K | 5% | 1/10W |
| R1711 | 1-216-847-11 | METAL CHIP | 150K | 5% | 1/10W |
| R1715 | 1-216-833-11 | METAL CHIP | 10K | 5% | 1/10W |
| R1716 | 1-216-833-11 | METAL CHIP | 10K | 5% | 1/10W |
| R1717 | 1-216-847-11 | METAL CHIP | 150K | 5% | 1/10W |
| R1718 | 1-216-833-11 | METAL CHIP | 10K | 5% | 1/10W |
| R1728 | 1-216-840-11 | METAL CHIP | 39K | 5% | 1/10W |
| R1729 | 1-216-847-11 | METAL CHIP | 150K | 5% | 1/10W |
| R1731 | 1-216-819-11 | METAL CHIP | 680 | 5% | 1/10W |
| R1736 | 1-131-664-91 | CERAMIC CHIP | 0.15uF | 10% | 10V (SAF, EA) |
| R1744 | 1-216-841-11 | METAL CHIP | 47K | 5% | 1/10W |
| R1745 | 1-216-841-11 | METAL CHIP | 47K | 5% | 1/10W |
| R1746 | 1-216-846-11 | METAL CHIP | 120K | 5% | 1/10W |
| R1747 | 1-216-846-11 | METAL CHIP | 120K | 5% | 1/10W |
| R1750 | 1-257-172-91 | METAL CHIP | 100 | 5% | 1/3W |
| R1751 | 1-257-172-91 | METAL CHIP | 100 | 5% | 1/3W |
| R1758 | 1-257-172-91 | METAL CHIP | 100 | 5% | 1/3W |
| R1759 | 1-257-172-91 | METAL CHIP | 100 | 5% | 1/3W |
| R1760 | 1-257-172-91 | METAL CHIP | 100 | 5% | 1/3W |
| R1761 | 1-257-172-91 | METAL CHIP | 100 | 5% | 1/3W |
| R1762 | 1-257-172-91 | METAL CHIP | 100 | 5% | 1/3W |
| R1763 | 1-257-172-91 | METAL CHIP | 100 | 5% | 1/3W |
| R1764 | 1-257-172-21 | RES, CHIP | 100 (3216) | | |
| R1765 | 1-257-172-21 | RES, CHIP | 100 (3216) | | |
| R1771 | 1-216-864-11 | SHORT CHIP | 0 | | |
| R1772 | 1-216-797-11 | METAL CHIP | 10 | 5% | 1/10W |
| R1774 | 1-216-797-11 | METAL CHIP | 10 | 5% | 1/10W |
| R1775 | 1-216-796-11 | METAL CHIP | 8.2 | 5% | 1/10W |
| R1780 | 1-216-846-11 | METAL CHIP | 120K | 5% | 1/10W |
| R1781 | 1-257-172-21 | RES, CHIP | 100 (3216) | | |
| R1782 | 1-257-172-21 | RES, CHIP | 100 (3216) | | |
| R1783 | 1-257-172-21 | RES, CHIP | 100 (3216) | | |
| R1784 | 1-257-172-21 | RES, CHIP | 100 (3216) | | |
| R1785 | 1-216-833-11 | METAL CHIP | 10K | 5% | 1/10W |
| R1806 | 1-216-838-11 | METAL CHIP | 27K | 5% | 1/10W |
| R1807 | 1-216-838-11 | METAL CHIP | 27K | 5% | 1/10W |
| R1808 | 1-216-838-11 | METAL CHIP | 27K | 5% | 1/10W |
| R1812 | 1-216-797-11 | METAL CHIP | 10 | 5% | 1/10W |
| R1813 | 1-216-797-11 | METAL CHIP | 10 | 5% | 1/10W |
| R1814 | 1-216-797-11 | METAL CHIP | 10 | 5% | 1/10W |
| R1815 | 1-216-797-11 | METAL CHIP | 10 | 5% | 1/10W |
| | | < TERMINAL > | | | |
| TB1400 | 1-780-886-11 | TERMINAL BOARD (SPEAKER) (LOW SPEAKER L/R IMPEDANCE USE 4Ω) | | | |
| TB1401 | 1-780-897-11 | TERMINAL BOARD, (SPEAKER) (HIGH SPEAKER L/R IMPEDANCE USE 4Ω) | | | |
| | | < THERMISTOR > | | | |
| TH1400 | 1-804-045-11 | THERMISTOR | | | |
| TH1401 | 1-804-045-11 | THERMISTOR | | | |
| TH1402 | 1-804-045-11 | THERMISTOR | | | |
| TH1403 | 1-804-045-11 | THERMISTOR | | | |

**********

DISPLAY BOARD
**********

< CAPACITOR >

| | | | | | |
|---|---|---|---|---|---|
| C901 | 1-127-715-11 | CERAMIC CHIP | 0.22uF | 10% | 16V |

| Ref. No. | Part No. | Description | | | Remark |
|---|---|---|---|---|---|
| C902 | 1-114-868-11 | CERAMIC CHIP | 0.1uF | 10% | 50V |
| C907 | 1-100-597-91 | CERAMIC CHIP | 0.1uF | 10% | 25V |
| C908 | 1-126-513-11 | ELECT | 47uF | 20% | 6.3V |
| C915 | 1-162-960-11 | CERAMIC CHIP | 220PF | 10% | 50V |
| C918 | 1-127-804-91 | CERAMIC CHIP | 100PF | 1% | 50V |
| C920 | 1-127-804-91 | CERAMIC CHIP | 100PF | 1% | 50V |
| C925 | 1-114-868-11 | CERAMIC CHIP | 0.1uF | 10% | 50V |
| C926 | 1-100-597-91 | CERAMIC CHIP | 0.1uF | 10% | 25V |
| C930 | 1-128-131-11 | ELECT | 22uF | 20% | 50V |
| C952 | 1-114-868-11 | CERAMIC CHIP | 0.1uF | 10% | 50V |
| C953 | 1-126-786-11 | ELECT | 47uF | 20% | 16V |
| C956 | 1-162-968-11 | CERAMIC CHIP | 0.0047uF | 10% | 50V |
| C957 | 1-163-021-91 | CERAMIC CHIP | 0.01uF | 10% | 50V |
| C958 | 1-126-966-11 | ELECT | 33uF | 20% | 50V |
| C959 | 1-100-597-91 | CERAMIC CHIP | 0.1uF | 10% | 25V |
| | | < CONNECTOR > | | | |
| * CN900 | 1-564-726-11 | PIN, CONNECTOR (SMALL TYPE) 10P | | | |
| | | < DIODE > | | | |
| D901 | 6-502-945-01 | DI CRH01(TE85R,Q) | | | |
| D902 | 6-502-970-01 | DI DZ2J068M0L | | | |
| D903 | 6-502-945-01 | DI CRH01(TE85R,Q) | | | |
| D904 | 6-502-945-01 | DI CRH01(TE85R,Q) | | | |
| D905 | 6-502-945-01 | DI CRH01(TE85R,Q) | | | |
| | | < FLUORESCENT INDICATOR TUBE > | | | |
| FL901 | 1-483-367-11 | VACUUM FLUORESCENT DISPLAY | | | |
| | | < IC > | | | |
| IC901 | 6-717-584-01 | IC PT6324-LQ | | | |
| IC982 | 6-600-768-01 | IC PNA4823M03S0 | | | |
| | | < JUMPER RESISTOR > | | | |
| JR400 | 1-216-296-11 | SHORT CHIP | 0 | | |
| JR900 | 1-216-296-11 | SHORT CHIP | 0 | | |
| JR901 | 1-216-296-11 | SHORT CHIP | 0 | | |
| JR902 | 1-216-296-11 | SHORT CHIP | 0 | | |
| JR903 | 1-216-296-11 | SHORT CHIP | 0 | | |
| JR904 | 1-216-296-11 | SHORT CHIP | 0 | | |
| JR905 | 1-216-296-11 | SHORT CHIP | 0 | | |
| JR906 | 1-216-296-11 | SHORT CHIP | 0 | | |
| JR907 | 1-216-296-11 | SHORT CHIP | 0 | | |
| JR908 | 1-216-296-11 | SHORT CHIP | 0 | | |
| JR909 | 1-216-296-11 | SHORT CHIP | 0 | | |
| JR910 | 1-216-296-11 | SHORT CHIP | 0 | | |
| JR911 | 1-216-296-11 | SHORT CHIP | 0 | | |
| JR912 | 1-216-296-11 | SHORT CHIP | 0 | | |
| JR913 | 1-216-296-11 | SHORT CHIP | 0 | | |
| JR914 | 1-216-296-11 | SHORT CHIP | 0 | | |
| JR915 | 1-216-296-11 | SHORT CHIP | 0 | | |
| JR916 | 1-216-296-11 | SHORT CHIP | 0 | | |
| JR917 | 1-216-296-11 | SHORT CHIP | 0 | | |
| JR918 | 1-216-296-11 | SHORT CHIP | 0 | | |
| JR919 | 1-216-296-11 | SHORT CHIP | 0 | | |
| JR920 | 1-216-296-11 | SHORT CHIP | 0 | | |
| JR921 | 1-216-296-11 | SHORT CHIP | 0 | | |
| JR922 | 1-216-296-11 | SHORT CHIP | 0 | | |
| JR923 | 1-216-864-11 | SHORT CHIP | 0 | | |
| JR924 | 1-216-296-11 | SHORT CHIP | 0 | | |

| Ref. No. | Part No. | Description | | | Remark |
|---|---|---|---|---|---|
| | | < COIL > | | | |
| L900 | 1-412-541-41 | INDUCTOR | 220uH | | |
| | | < TRANSISTOR > | | | |
| Q900 | 6-551-272-01 | TRANSISTOR | RT3CLLM | | |
| Q901 | 6-551-272-01 | TRANSISTOR | RT3CLLM | | |
| Q902 | 8-729-620-07 | TRANSISTOR | 2SC3052EF-T1-LEF | | |
| Q904 | 8-729-620-07 | TRANSISTOR | 2SC3052EF-T1-LEF | | |
| Q906 | 6-553-083-01 | TR PBSS4160T | | | |
| Q907 | 6-553-083-01 | TR PBSS4160T | | | |
| | | < RESISTOR > | | | |
| R900 | 1-216-801-11 | METAL CHIP | 22 | 5% | 1/10W |
| R901 | 1-216-845-11 | METAL CHIP | 100K | 5% | 1/10W |
| R902 | 1-216-813-11 | METAL CHIP | 220 | 5% | 1/10W |
| R903 | 1-216-817-11 | METAL CHIP | 470 | 5% | 1/10W |
| R904 | 1-216-817-11 | METAL CHIP | 470 | 5% | 1/10W |
| R905 | 1-216-821-11 | METAL CHIP | 1K | 5% | 1/10W |
| R906 | 1-216-821-11 | METAL CHIP | 1K | 5% | 1/10W |
| R907 | 1-216-821-11 | METAL CHIP | 1K | 5% | 1/10W |
| R908 | 1-216-821-11 | METAL CHIP | 1K | 5% | 1/10W |
| R909 | 1-216-821-11 | METAL CHIP | 1K | 5% | 1/10W |
| R910 | 1-216-825-11 | METAL CHIP | 2.2K | 5% | 1/10W |
| R911 | 1-216-825-11 | METAL CHIP | 2.2K | 5% | 1/10W |
| R912 | 1-216-825-11 | METAL CHIP | 2.2K | 5% | 1/10W |
| R913 | 1-216-825-11 | METAL CHIP | 2.2K | 5% | 1/10W |
| R914 | 1-216-825-11 | METAL CHIP | 2.2K | 5% | 1/10W |
| R915 | 1-216-825-11 | METAL CHIP | 2.2K | 5% | 1/10W |
| R916 | 1-216-821-11 | METAL CHIP | 1K | 5% | 1/10W |
| R917 | 1-216-828-11 | METAL CHIP | 3.9K | 5% | 1/10W |
| R918 | 1-216-839-11 | METAL CHIP | 33K | 5% | 1/10W |
| R919 | 1-257-172-91 | METAL CHIP | 100 | 5% | 1/3W |
| R920 | 1-257-172-91 | METAL CHIP | 100 | 5% | 1/3W |
| R922 | 1-216-864-11 | SHORT CHIP | 0 | | |
| | | < TRANSFORMER > | | | |
| ⚠ T900 | 1-697-047-11 | DC-DC CONVERTER TRANSFORMER | | | |

**********

| | | | | | |
|---|---|---|---|---|---|
| | A-1820-980-A | DMB21 BOARD, COMPLETE | | | |
| | | ********** | | | |
| | | < CAPACITOR > | | | |
| C101 | 1-100-567-81 | CERAMIC CHIP | 0.01uF | 10% | 25V |
| C102 | 1-125-777-11 | CERAMIC CHIP | 0.1uF | 10% | 10V |
| C105 | 1-128-994-21 | ELECT CHIP | 47uF | 20% | 10V |
| C106 | 1-162-970-11 | CERAMIC CHIP | 0.01uF | 10% | 25V |
| C108 | 1-164-938-11 | CERAMIC CHIP | 0.0015uF | 10% | 50V |
| C111 | 1-125-777-11 | CERAMIC CHIP | 0.1uF | 10% | 10V |
| C112 | 1-128-994-21 | ELECT CHIP | 47uF | 20% | 10V |
| C113 | 1-162-970-11 | CERAMIC CHIP | 0.01uF | 10% | 25V |
| C115 | 1-107-826-11 | CERAMIC CHIP | 0.1uF | 10% | 16V |
| C116 | 1-107-826-11 | CERAMIC CHIP | 0.1uF | 10% | 16V |
| C118 | 1-124-779-00 | ELECT CHIP | 10uF | 20% | 16V |
| C119 | 1-137-710-91 | CERAMIC CHIP | 10uF | 20% | 6.3V |
| C124 | 1-165-908-11 | CERAMIC CHIP | 1uF | 10% | 10V |
| C125 | 1-125-777-11 | CERAMIC CHIP | 0.1uF | 10% | 10V |
| C126 | 1-165-989-11 | CERAMIC CHIP | 10uF | 10% | 6.3V |
| C127 | 1-112-717-91 | CERAMIC CHIP | 1uF | 10% | 6.3V |

| Ref. No. | Part No. | Description | | | Remark |
|---|---|---|---|---|---|
| C144 | 1-100-567-81 | CERAMIC CHIP | 0.01uF | 10% | 25V |
| C145 | 1-100-567-81 | CERAMIC CHIP | 0.01uF | 10% | 25V |
| C146 | 1-112-717-91 | CERAMIC CHIP | 1uF | 10% | 6.3V |
| C149 | 1-100-567-81 | CERAMIC CHIP | 0.01uF | 10% | 25V |
| C150 | 1-100-567-81 | CERAMIC CHIP | 0.01uF | 10% | 25V |
| C151 | 1-100-567-81 | CERAMIC CHIP | 0.01uF | 10% | 25V |
| C152 | 1-164-852-11 | CERAMIC CHIP | 12PF | 5% | 50V |
| C153 | 1-164-850-11 | CERAMIC CHIP | 10PF | 0.5PF | 50V |
| C154 | 1-125-777-11 | CERAMIC CHIP | 0.1uF | 10% | 10V |
| C155 | 1-125-777-11 | CERAMIC CHIP | 0.1uF | 10% | 10V |
| C156 | 1-100-567-81 | CERAMIC CHIP | 0.01uF | 10% | 25V |
| C160 | 1-100-567-81 | CERAMIC CHIP | 0.01uF | 10% | 25V |
| C168 | 1-125-777-11 | CERAMIC CHIP | 0.1uF | 10% | 10V |
| C169 | 1-125-777-11 | CERAMIC CHIP | 0.1uF | 10% | 10V |
| C172 | 1-100-567-81 | CERAMIC CHIP | 0.01uF | 10% | 25V |
| C175 | 1-100-567-81 | CERAMIC CHIP | 0.01uF | 10% | 25V |
| C179 | 1-107-826-11 | CERAMIC CHIP | 0.1uF | 10% | 16V |
| C180 | 1-107-826-11 | CERAMIC CHIP | 0.1uF | 10% | 16V |
| C181 | 1-107-826-11 | CERAMIC CHIP | 0.1uF | 10% | 16V |
| C183 | 1-112-717-91 | CERAMIC CHIP | 1uF | 10% | 6.3V |
| C185 | 1-128-994-21 | ELECT CHIP | 47uF | 20% | 10V |
| C188 | 1-114-214-81 | CERAMIC CHIP | 470PF | 5% | 50V |
| C189 | 1-128-994-21 | ELECT CHIP | 47uF | 20% | 10V |
| C190 | 1-165-492-21 | ELECT CHIP | 100uF | 20% | 10V |
| C191 | 1-107-826-11 | CERAMIC CHIP | 0.1uF | 10% | 16V |
| C192 | 1-100-567-81 | CERAMIC CHIP | 0.01uF | 10% | 25V |
| C193 | 1-165-887-91 | CERAMIC CHIP | 0.22uF | 10% | 6.3V |
| C195 | 1-165-887-91 | CERAMIC CHIP | 0.22uF | 10% | 6.3V |
| C197 | 1-107-826-11 | CERAMIC CHIP | 0.1uF | 10% | 16V |
| C198 | 1-112-717-91 | CERAMIC CHIP | 1uF | 10% | 6.3V |
| C199 | 1-162-968-11 | CERAMIC CHIP | 0.0047uF | 10% | 50V |
| C203 | 1-100-567-81 | CERAMIC CHIP | 0.01uF | 10% | 25V |
| C205 | 1-164-882-11 | CERAMIC CHIP | 220PF | 5% | 16V |
| C206 | 1-164-882-11 | CERAMIC CHIP | 220PF | 5% | 16V |
| C208 | 1-100-567-81 | CERAMIC CHIP | 0.01uF | 10% | 25V |
| C209 | 1-164-677-11 | CERAMIC CHIP | 0.033uF | 10% | 16V |
| C210 | 1-100-567-81 | CERAMIC CHIP | 0.01uF | 10% | 25V |
| C211 | 1-164-677-11 | CERAMIC CHIP | 0.033uF | 10% | 16V |
| C212 | 1-162-970-11 | CERAMIC CHIP | 0.01uF | 10% | 25V |
| C213 | 1-100-567-81 | CERAMIC CHIP | 0.01uF | 10% | 25V |
| C214 | 1-162-964-11 | CERAMIC CHIP | 0.001uF | 10% | 50V |
| C215 | 1-100-567-81 | CERAMIC CHIP | 0.01uF | 10% | 25V |
| C216 | 1-100-567-81 | CERAMIC CHIP | 0.01uF | 10% | 25V |
| C217 | 1-117-681-11 | ELECT CHIP | 100uF | 20% | 16V |
| C218 | 1-128-994-21 | ELECT CHIP | 47uF | 20% | 10V |
| C219 | 1-100-567-81 | CERAMIC CHIP | 0.01uF | 10% | 25V |
| C220 | 1-128-994-21 | ELECT CHIP | 47uF | 20% | 10V |
| C221 | 1-107-820-81 | CERAMIC CHIP | 0.1uF | | 16V |
| C222 | 1-107-820-81 | CERAMIC CHIP | 0.1uF | | 16V |
| C223 | 1-107-820-81 | CERAMIC CHIP | 0.1uF | | 16V |
| C224 | 1-100-567-81 | CERAMIC CHIP | 0.01uF | 10% | 25V |
| C225 | 1-164-937-11 | CERAMIC CHIP | 0.001uF | 10% | 50V |
| C226 | 1-164-937-11 | CERAMIC CHIP | 0.001uF | 10% | 50V |
| C233 | 1-162-968-11 | CERAMIC CHIP | 0.0047uF | 10% | 50V |
| C602 | 1-165-492-21 | ELECT CHIP | 100uF | 20% | 10V |
| C603 | 1-165-492-21 | ELECT CHIP | 100uF | 20% | 10V |
| C604 | 1-165-492-21 | ELECT CHIP | 100uF | 20% | 10V |
| * C608 | 1-114-582-11 | CERAMIC CHIP | 0.1uF | 10% | 16V |
| C611 | 1-125-777-11 | CERAMIC CHIP | 0.1uF | 10% | 10V |
| C620 | 1-107-820-81 | CERAMIC CHIP | 0.1uF | | 16V |

| Ref. No. | Part No. | Description | | | Remark |
|---|---|---|---|---|---|
| C621 | 1-107-820-81 | CERAMIC CHIP | 0.1uF | | 16V |
| C622 | 1-107-820-81 | CERAMIC CHIP | 0.1uF | | 16V |
| C623 | 1-107-820-81 | CERAMIC CHIP | 0.1uF | | 16V |
| C1504 | 1-162-960-11 | CERAMIC CHIP | 220PF | 10% | 50V |
| C1505 | 1-162-970-11 | CERAMIC CHIP | 0.01uF | 10% | 25V |
| C1506 | 1-164-937-11 | CERAMIC CHIP | 0.001uF | 10% | 50V |
| C1507 | 1-125-777-11 | CERAMIC CHIP | 0.1uF | 10% | 10V |
| C1512 | 1-107-826-11 | CERAMIC CHIP | 0.1uF | 10% | 16V |
| C1513 | 1-107-826-11 | CERAMIC CHIP | 0.1uF | 10% | 16V |
| C4602 | 1-107-820-81 | CERAMIC CHIP | 0.1uF | | 16V |
| C4603 | 1-107-820-81 | CERAMIC CHIP | 0.1uF | | 16V |
| C4606 | 1-107-820-81 | CERAMIC CHIP | 0.1uF | | 16V |
| C4608 | 1-124-779-00 | ELECT CHIP | 10uF | 20% | 16V |
| C4622 | 1-164-874-11 | CERAMIC CHIP | 100PF | 5% | 50V |
| C4623 | 1-164-874-11 | CERAMIC CHIP | 100PF | 5% | 50V |
| C4626 | 1-100-567-81 | CERAMIC CHIP | 0.01uF | 10% | 25V |
| C4628 | 1-107-820-81 | CERAMIC CHIP | 0.1uF | | 16V |
| C4629 | 1-107-820-81 | CERAMIC CHIP | 0.1uF | | 16V |
| C4630 | 1-100-567-81 | CERAMIC CHIP | 0.01uF | 10% | 25V |
| C4631 | 1-107-820-81 | CERAMIC CHIP | 0.1uF | | 16V |
| C4632 | 1-107-820-81 | CERAMIC CHIP | 0.1uF | | 16V |
| C4633 | 1-124-779-00 | ELECT CHIP | 10uF | 20% | 16V |
| C4634 | 1-124-779-00 | ELECT CHIP | 10uF | 20% | 16V |
| C4635 | 1-107-820-81 | CERAMIC CHIP | 0.1uF | | 16V |
| C4636 | 1-107-820-81 | CERAMIC CHIP | 0.1uF | | 16V |
| C4637 | 1-107-820-81 | CERAMIC CHIP | 0.1uF | | 16V |
| C4638 | 1-100-567-81 | CERAMIC CHIP | 0.01uF | 10% | 25V |
| C4639 | 1-164-860-11 | CERAMIC CHIP | 27PF | 5% | 50V |
| C4640 | 1-164-862-11 | CERAMIC CHIP | 33PF | 5% | 50V |
| C4641 | 1-112-746-11 | CERAMIC CHIP | 4.7uF | 10% | 6.3V |
| C4642 | 1-164-850-11 | CERAMIC CHIP | 10PF | 0.5PF | 50V |
| C4643 | 1-164-850-11 | CERAMIC CHIP | 10PF | 0.5PF | 50V |
| C4644 | 1-124-779-00 | ELECT CHIP | 10uF | 20% | 16V |
| C4645 | 1-107-820-81 | CERAMIC CHIP | 0.1uF | | 16V |
| C4650 | 1-100-567-81 | CERAMIC CHIP | 0.01uF | 10% | 25V |
| | | < CONNECTOR > | | | |
| CN101 | 1-815-763-32 | CONNECTOR, FFC/FPC 24P | | | |
| CN105 | 1-770-470-21 | PIN, CONNECTOR (PC BOARD) 6P | | | |
| CN109 | 1-784-865-51 | CONNECTOR, FFC (LIF (NON-ZIF)) 13P | | | |
| CN201 | 1-770-161-21 | PIN, CONNECTOR (PC BOARD) 6P | | | |
| CN202 | 1-784-859-51 | CONNECTOR, FFC (LIF (NON-ZIF)) 7P | | | |
| CN602 | 1-774-297-21 | PIN, CONNECTOR (PC BOARD) 7P | | | |
| CN1108 | 1-770-160-21 | PIN, CONNECTOR (PC BOARD) 2P | | | |
| CN4604 | 1-784-865-51 | CONNECTOR, FFC (LIF (NON-ZIF)) 13P | | | |
| | | < DIODE > | | | |
| D001 | 6-500-848-01 | DIODE MC2840-T112-1 | | | |
| D002 | 6-500-848-01 | DIODE MC2840-T112-1 | | | |
| D003 | 6-500-848-01 | DIODE MC2840-T112-1 | | | |
| D004 | 6-500-848-01 | DIODE MC2840-T112-1 | | | |
| D005 | 6-500-848-01 | DIODE MC2840-T112-1 | | | |
| | | < TERMINAL, LUG > | | | |
| * ET001 | 1-780-408-11 | TERMINAL, LUG | | | |
| * ET002 | 1-780-408-11 | TERMINAL, LUG | | | |
| * ET003 | 1-780-408-11 | TERMINAL, LUG | | | |
| * ET004 | 1-780-408-11 | TERMINAL, LUG | | | |

| Ref. No. | Part No. | Description | | | Remark |
|---|---|---|---|---|---|
| | | < FERRITE BEAD > | | | |
| FB108 | 1-469-324-21 | FERRITE, EMI (SMD) (2012) | | | |
| FB603 | 1-469-324-21 | FERRITE, EMI (SMD) (2012) | | | |
| FB607 | 1-469-324-21 | FERRITE, EMI (SMD) (2012) | | | |
| FB1114 | 1-500-903-21 | EMI FERRITE (SMD) | | | |
| FB1264 | 1-469-118-21 | FERRITE, EMI (SMD) (1608) | | | |
| FB1265 | 1-469-118-21 | FERRITE, EMI (SMD) (1608) | | | |
| FB1266 | 1-469-118-21 | FERRITE, EMI (SMD) (1608) | | | |
| FB1267 | 1-469-118-21 | FERRITE, EMI (SMD) (1608) | | | |
| FB1268 | 1-469-118-21 | FERRITE, EMI (SMD) (1608) | | | |
| | | < FLUORESCENT INDICATOR TUBE > | | | |
| FL603 | 1-234-494-21 | FILTER, EMI REMOVAL (SMD) | | | |
| | | < IC > | | | |
| IC101 | 6-714-821-01 | IC CXD9968R (LE) | | | |
| IC102 | (Not supplied) | IC W25Q16BVSSIG | | | |
| IC104 | 6-714-642-01 | IC EM638165 TSA-6G | | | |
| IC107 | 6-716-993-01 | IC MM1836A33NRE | | | |
| IC111 | 6-706-838-01 | IC MM1661JHBE | | | |
| IC201 | 6-704-524-01 | IC FAN8036L | | | |
| IC4601 | 6-710-554-01 | IC PCM1808PWR | | | |
| IC4602 | 6-707-111-01 | IC PCM1753DBQR | | | |
| IC4605 | (Not supplied) | IC TAS3108DCPR | | | |
| IC4607 | 6-707-800-01 | IC SRC4182 | | | |
| IC4608 | 8-759-680-48 | IC TC7WH157FK | | | |
| IC4609 | 8-759-698-31 | IC TC7WH74FK | | | |
| | | < TRANSISTOR > | | | |
| Q101 | 6-550-008-01 | TRANSISTOR | UM6K1N-TN | | |
| Q103 | 8-729-029-06 | TRANSISTOR | DTC124EUA-T106 | | |
| Q104 | 6-551-120-01 | TRANSISTOR | 2SA2119K | | |
| Q105 | 6-551-120-01 | TRANSISTOR | 2SA2119K | | |
| | | < RESISTOR > | | | |
| R101 | 1-216-809-11 | METAL CHIP | 100 | 5% | 1/10W |
| R102 | 1-218-990-81 | SHORT CHIP | 0 | | |
| R103 | 1-218-864-11 | METAL CHIP | 5.1K | 0.5% | 1/10W |
| R107 | 1-218-965-11 | METAL CHIP | 10K | 5% | 1/16W |
| R108 | 1-216-857-11 | METAL CHIP | 1M | 5% | 1/10W |
| R109 | 1-216-809-11 | METAL CHIP | 100 | 5% | 1/10W |
| R110 | 1-216-841-11 | METAL CHIP | 47K | 5% | 1/10W |
| R111 | 1-216-809-11 | METAL CHIP | 100 | 5% | 1/10W |
| R112 | 1-211-977-11 | METAL CHIP | 22 | 0.5% | 1/10W |
| R113 | 1-211-977-11 | METAL CHIP | 22 | 0.5% | 1/10W |
| R114 | 1-216-845-11 | METAL CHIP | 100K | 5% | 1/10W |
| R115 | 1-211-977-11 | METAL CHIP | 22 | 0.5% | 1/10W |
| R116 | 1-216-821-11 | METAL CHIP | 1K | 5% | 1/10W |
| R117 | 1-216-841-11 | METAL CHIP | 47K | 5% | 1/10W |
| R118 | 1-216-801-11 | METAL CHIP | 22 | 5% | 1/10W |
| R120 | 1-216-801-11 | METAL CHIP | 22 | 5% | 1/10W |
| R121 | 1-216-801-11 | METAL CHIP | 22 | 5% | 1/10W |
| R122 | 1-216-833-11 | METAL CHIP | 10K | 5% | 1/10W |
| R123 | 1-216-809-11 | METAL CHIP | 100 | 5% | 1/10W |
| R124 | 1-216-841-11 | METAL CHIP | 47K | 5% | 1/10W |
| R125 | 1-216-833-11 | METAL CHIP | 10K | 5% | 1/10W |
| R133 | 1-218-990-81 | SHORT CHIP | 0 | | |
| R136 | 1-218-967-11 | METAL CHIP | 15K | 5% | 1/16W |
| R142 | 1-218-977-11 | METAL CHIP | 100K | 5% | 1/16W |
| R154 | 1-216-295-91 | SHORT CHIP | 0 | | |
| R155 | 1-216-295-91 | SHORT CHIP | 0 | | |
| R156 | 1-218-941-81 | METAL CHIP | 100 | 5% | 1/16W |
| R204 | 1-218-954-11 | METAL CHIP | 1.2K | 5% | 1/16W |
| R205 | 1-218-965-11 | METAL CHIP | 10K | 5% | 1/16W |
| R206 | 1-218-965-11 | METAL CHIP | 10K | 5% | 1/16W |
| R207 | 1-218-958-11 | METAL CHIP | 2.7K | 5% | 1/16W |
| R208 | 1-218-971-11 | METAL CHIP | 33K | 5% | 1/16W |
| R209 | 1-218-971-11 | METAL CHIP | 33K | 5% | 1/16W |
| R210 | 1-218-973-11 | METAL CHIP | 47K | 5% | 1/16W |
| R212 | 1-218-965-11 | METAL CHIP | 10K | 5% | 1/16W |
| R213 | 1-218-963-11 | METAL CHIP | 6.8K | 5% | 1/16W |
| R214 | 1-218-967-11 | METAL CHIP | 15K | 5% | 1/16W |
| R215 | 1-218-966-11 | METAL CHIP | 12K | 5% | 1/16W |
| R216 | 1-218-966-11 | METAL CHIP | 12K | 5% | 1/16W |
| R219 | 1-218-970-11 | METAL CHIP | 27K | 5% | 1/16W |
| R220 | 1-216-821-11 | METAL CHIP | 1K | 5% | 1/10W |
| R221 | 1-218-889-11 | METAL CHIP | 56K | 0.5% | 1/10W |
| R223 | 1-218-895-11 | METAL CHIP | 100K | 0.5% | 1/10W |
| R224 | 1-218-965-11 | METAL CHIP | 10K | 5% | 1/16W |
| R225 | 1-218-895-11 | METAL CHIP | 100K | 0.5% | 1/10W |
| R226 | 1-218-889-11 | METAL CHIP | 56K | 0.5% | 1/10W |
| R227 | 1-218-990-81 | SHORT CHIP | 0 | | |
| R228 | 1-218-990-81 | SHORT CHIP | 0 | | |
| R230 | 1-218-893-11 | METAL CHIP | 82K | 0.5% | 1/10W |
| R231 | 1-218-875-11 | METAL CHIP | 15K | 0.5% | 1/10W |
| R232 | 1-218-877-11 | METAL CHIP | 18K | 0.5% | 1/10W |
| R233 | 1-218-883-11 | METAL CHIP | 33K | 0.5% | 1/10W |
| R234 | 1-216-833-11 | METAL CHIP | 10K | 5% | 1/10W |
| R236 | 1-218-953-11 | METAL CHIP | 1K | 5% | 1/16W |
| R237 | 1-218-953-11 | METAL CHIP | 1K | 5% | 1/16W |
| R238 | 1-218-953-11 | METAL CHIP | 1K | 5% | 1/16W |
| R239 | 1-218-953-11 | METAL CHIP | 1K | 5% | 1/16W |
| R246 | 1-218-961-11 | METAL CHIP | 4.7K | 5% | 1/16W |
| R247 | 1-218-953-11 | METAL CHIP | 1K | 5% | 1/16W |
| R254 | 1-218-961-11 | METAL CHIP | 4.7K | 5% | 1/16W |
| R255 | 1-218-961-11 | METAL CHIP | 4.7K | 5% | 1/16W |
| R256 | 1-218-965-11 | METAL CHIP | 10K | 5% | 1/16W |
| R521 | 1-218-965-11 | METAL CHIP | 10K | 5% | 1/16W |
| R601 | 1-216-295-91 | SHORT CHIP | 0 | | |
| R604 | 1-216-295-91 | SHORT CHIP | 0 | | |
| R605 | 1-216-295-91 | SHORT CHIP | 0 | | |
| R606 | 1-216-295-91 | SHORT CHIP | 0 | | |
| R608 | 1-216-295-91 | SHORT CHIP | 0 | | |
| R611 | 1-216-295-91 | SHORT CHIP | 0 | | |
| R612 | 1-216-295-91 | SHORT CHIP | 0 | | |
| R630 | 1-218-990-81 | SHORT CHIP | 0 | | |
| R1101 | 1-208-677-11 | METAL CHIP | 560 | 0.5% | 1/16W |
| R1105 | 1-216-295-91 | SHORT CHIP | 0 | | |
| R1110 | 1-218-958-11 | METAL CHIP | 2.7K | 5% | 1/16W |
| R1121 | 1-218-990-81 | SHORT CHIP | 0 | | |
| R1123 | 1-218-990-81 | SHORT CHIP | 0 | | |
| R1129 | 1-216-845-11 | METAL CHIP | 100K | 5% | 1/10W |
| R1150 | 1-218-959-11 | METAL CHIP | 3.3K | 5% | 1/16W |
| R1151 | 1-216-827-11 | METAL CHIP | 3.3K | 5% | 1/10W |
| R1152 | 1-216-827-11 | METAL CHIP | 3.3K | 5% | 1/10W |
| R1168 | 1-218-947-11 | METAL CHIP | 330 | 5% | 1/16W |
| R1177 | 1-218-990-81 | SHORT CHIP | 0 | | |
| R1178 | 1-218-953-11 | METAL CHIP | 1K | 5% | 1/16W |
| R1184 | 1-218-941-81 | METAL CHIP | 100 | 5% | 1/16W |
| R1191 | 1-218-990-81 | SHORT CHIP | 0 | | |

**Note:** IC102 and IC4605 on the DMB21 board cannot exchange with single. When these parts on the DMB21 board are damaged, exchange the entire mounted board.

| Ref. No. | Part No. | Description | | | Remark |
|---|---|---|---|---|---|
| R1192 | 1-218-990-81 | SHORT CHIP | 0 | | |
| R1193 | 1-218-990-81 | SHORT CHIP | 0 | | |
| R1194 | 1-218-990-81 | SHORT CHIP | 0 | | |
| R1213 | 1-216-295-91 | SHORT CHIP | 0 | | |
| R1248 | 1-218-990-81 | SHORT CHIP | 0 | | |
| R1249 | 1-218-953-11 | METAL CHIP | 1K | 5% | 1/16W |
| R1250 | 1-216-295-91 | SHORT CHIP | 0 | | |
| R1252 | 1-216-295-91 | SHORT CHIP | 0 | | |
| R1255 | 1-216-295-91 | SHORT CHIP | 0 | | |
| R1256 | 1-216-295-91 | SHORT CHIP | 0 | | |
| R1261 | 1-218-965-11 | METAL CHIP | 10K | 5% | 1/16W |
| R1262 | 1-218-965-11 | METAL CHIP | 10K | 5% | 1/16W |
| R1263 | 1-216-864-11 | SHORT CHIP | 0 | | |
| R1269 | 1-218-941-81 | METAL CHIP | 100 | 5% | 1/16W |
| R1276 | 1-218-990-81 | SHORT CHIP | 0 | | |
| R1277 | 1-218-941-81 | METAL CHIP | 100 | 5% | 1/16W |
| R1278 | 1-218-965-11 | METAL CHIP | 10K | 5% | 1/16W |
| R1279 | 1-218-965-11 | METAL CHIP | 10K | 5% | 1/16W |
| R1280 | 1-218-990-81 | SHORT CHIP | 0 | | |
| R1281 | 1-218-990-81 | SHORT CHIP | 0 | | |
| R1282 | 1-218-990-81 | SHORT CHIP | 0 | | |
| R1283 | 1-216-864-11 | SHORT CHIP | 0 | | |
| R1290 | 1-216-295-91 | SHORT CHIP | 0 | | |
| R2502 | 1-218-953-11 | METAL CHIP | 1K | 5% | 1/16W |
| R2505 | 1-218-990-81 | SHORT CHIP | 0 | | |
| R2506 | 1-218-989-11 | METAL CHIP | 1M | 5% | 1/16W |
| R2507 | 1-218-957-11 | METAL CHIP | 2.2K | 5% | 1/16W |
| R4601 | 1-218-941-81 | METAL CHIP | 100 | 5% | 1/16W |
| R4602 | 1-218-941-81 | METAL CHIP | 100 | 5% | 1/16W |
| R4606 | 1-218-933-11 | METAL CHIP | 22 | 5% | 1/16W |
| R4608 | 1-218-990-81 | SHORT CHIP | 0 | | |
| R4609 | 1-218-990-81 | SHORT CHIP | 0 | | |
| R4611 | 1-218-990-81 | SHORT CHIP | 0 | | |
| R4833 | 1-216-864-11 | SHORT CHIP | 0 | | |
| R4834 | 1-216-864-11 | SHORT CHIP | 0 | | |
| R4835 | 1-216-295-91 | SHORT CHIP | 0 | | |
| R4837 | 1-216-864-11 | SHORT CHIP | 0 | | |
| R4838 | 1-216-864-11 | SHORT CHIP | 0 | | |
| R4839 | 1-218-990-81 | SHORT CHIP | 0 | | |
| R4841 | 1-218-937-11 | METAL CHIP | 47 | 5% | 1/16W |
| R4842 | 1-218-937-11 | METAL CHIP | 47 | 5% | 1/16W |
| R4843 | 1-218-965-11 | METAL CHIP | 10K | 5% | 1/16W |
| R4844 | 1-218-941-81 | METAL CHIP | 100 | 5% | 1/16W |
| R4845 | 1-218-941-81 | METAL CHIP | 100 | 5% | 1/16W |
| R4846 | 1-218-941-81 | METAL CHIP | 100 | 5% | 1/16W |
| R4847 | 1-218-941-81 | METAL CHIP | 100 | 5% | 1/16W |
| R4848 | 1-216-791-11 | METAL CHIP | 3.3 | 5% | 1/10W |
| R4849 | 1-216-295-91 | SHORT CHIP | 0 | | |
| R4850 | 1-218-990-81 | SHORT CHIP | 0 | | |
| R4851 | 1-218-941-81 | METAL CHIP | 100 | 5% | 1/16W |
| R4852 | 1-218-937-11 | METAL CHIP | 47 | 5% | 1/16W |
| R4853 | 1-218-937-11 | METAL CHIP | 47 | 5% | 1/16W |
| R4854 | 1-218-937-11 | METAL CHIP | 47 | 5% | 1/16W |
| R4855 | 1-218-990-81 | SHORT CHIP | 0 | | |
| R4856 | 1-218-965-11 | METAL CHIP | 10K | 5% | 1/16W |
| R4857 | 1-218-965-11 | METAL CHIP | 10K | 5% | 1/16W |
| R4858 | 1-218-937-11 | METAL CHIP | 47 | 5% | 1/16W |
| R4859 | 1-218-937-11 | METAL CHIP | 47 | 5% | 1/16W |
| R4861 | 1-218-941-81 | METAL CHIP | 100 | 5% | 1/16W |
| R4862 | 1-218-937-11 | METAL CHIP | 47 | 5% | 1/16W |
| R4867 | 1-218-937-11 | METAL CHIP | 47 | 5% | 1/16W |
| R4870 | 1-218-941-81 | METAL CHIP | 100 | 5% | 1/16W |
| R4871 | 1-218-941-81 | METAL CHIP | 100 | 5% | 1/16W |
| R4872 | 1-218-941-81 | METAL CHIP | 100 | 5% | 1/16W |
| R4873 | 1-218-990-81 | SHORT CHIP | 0 | | |
| R4874 | 1-218-990-81 | SHORT CHIP | 0 | | |
| R4876 | 1-218-990-81 | SHORT CHIP | 0 | | |
| R4877 | 1-218-937-11 | METAL CHIP | 47 | 5% | 1/16W |
| R4878 | 1-218-937-11 | METAL CHIP | 47 | 5% | 1/16W |
| R4879 | 1-218-965-11 | METAL CHIP | 10K | 5% | 1/16W |
| | | < COMPOSITION CIRCUIT BLOCK > | | | |
| RB105 | 1-234-400-21 | CONDUCTOR, NETWORK | (1005X4) | | |
| RB106 | 1-234-400-21 | CONDUCTOR, NETWORK | (1005X4) | | |
| RB107 | 1-234-400-21 | CONDUCTOR, NETWORK | (1005X4) | | |
| RB108 | 1-234-400-21 | CONDUCTOR, NETWORK | (1005X4) | | |
| RB111 | 1-234-400-21 | CONDUCTOR, NETWORK | (1005X4) | | |
| RB112 | 1-234-400-21 | CONDUCTOR, NETWORK | (1005X4) | | |
| RB113 | 1-234-400-21 | CONDUCTOR, NETWORK | (1005X4) | | |
| RB114 | 1-234-400-21 | CONDUCTOR, NETWORK | (1005X4) | | |
| RB115 | 1-234-400-21 | CONDUCTOR, NETWORK | (1005X4) | | |
| | | < VIBRATOR > | | | |
| X002 | 1-814-415-11 | QUARTZ CRYSTAL UNIT (12.288MHZ) | | | |
| X101 | 1-814-417-11 | QUARTZ CRYSTAL UNIT (27MHZ) | | | |
| ********** | | | | | |
| | A-1820-965-A | MAIN BOARD, COMPLETE (E2, E51, MX) | | | |
| | A-1820-982-A | MAIN BOARD, COMPLETE (SAF) | | | |
| | A-1820-984-A | MAIN BOARD, COMPLETE (EA) | | | |
| | A-1833-653-A | MAIN BOARD, COMPLETE (MY) | | | |
| | | ********** | | | |
| | | < CAPACITOR > | | | |
| C100 | 1-164-874-11 | CERAMIC CHIP | 100PF | 5% | 50V |
| C102 | 1-164-874-11 | CERAMIC CHIP | 100PF | 5% | 50V |
| C110 | 1-164-858-11 | CERAMIC CHIP | 22PF | 5% | 50V |
| C111 | 1-164-858-11 | CERAMIC CHIP | 22PF | 5% | 50V |
| C113 | 1-162-920-11 | CERAMIC CHIP | 27PF | 5% | 50V |
| C115 | 1-162-919-11 | CERAMIC CHIP | 22PF | 5% | 50V |
| C116 | 1-100-597-91 | CERAMIC CHIP | 0.1uF | 10% | 25V |
| C127 | 1-125-777-11 | CERAMIC CHIP | 0.1uF | 10% | 10V |
| C128 | 1-125-777-11 | CERAMIC CHIP | 0.1uF | 10% | 10V |
| C162 | 1-117-681-11 | ELECT CHIP | 100uF | 20% | 16V |
| C163 | 1-100-597-91 | CERAMIC CHIP | 0.1uF | 10% | 25V |
| C165 | 1-125-891-11 | CERAMIC CHIP | 0.47uF | 10% | 10V |
| C198 | 1-100-597-91 | CERAMIC CHIP | 0.1uF | 10% | 25V |
| C216 | 1-117-681-11 | ELECT CHIP | 100uF | 20% | 16V |
| C231 | 1-100-597-91 | CERAMIC CHIP | 0.1uF | 10% | 25V |
| C232 | 1-125-891-11 | CERAMIC CHIP | 0.47uF | 10% | 10V |
| C233 | 1-100-597-91 | CERAMIC CHIP | 0.1uF | 10% | 25V |

**Note 1:** Refer to the servicing notes “MAIN BOARD DISCRIMINATION” (page 5) for how to distinguish SUFFIX-11 and SUFFIX-12.

**Note 2:** A part of circuit composition of MAIN board (Suffix-12) has been changed in the midway of production. MAIN board (Suffix-12) that has not been changed appears as TYPE A, and the changed MAIN board (Suffix-12) appears as TYPE B.

| Ref. No. | Part No. | Description | | | Remark |
|---|---|---|---|---|---|
| C237 | 1-137-765-21 | ELECT CHIP | 47uF | 20% | 16V |
| C238 | 1-100-597-91 | CERAMIC CHIP | 0.1uF | 10% | 25V |
| C239 | 1-100-597-91 | CERAMIC CHIP | 0.1uF | 10% | 25V |
| | | | (SUFFIX-11, SUFFIX-12 (TYPE A)) | | |
| C240 | 1-125-777-11 | CERAMIC CHIP | 0.1uF | 10% | 10V |
| C241 | 1-100-597-91 | CERAMIC CHIP | 0.1uF | 10% | 25V |
| C242 | (Not supplied) | CERAMIC CHIP | 0.1uF | 10% | 25V |
| | | | | (SUFFIX-12 (TYPE B)) | |
| C250 | 1-125-889-11 | CERAMIC CHIP | 2.2uF | 10% | 10V |
| C267 | 1-125-889-11 | CERAMIC CHIP | 2.2uF | 10% | 10V |
| C298 | 1-100-597-91 | CERAMIC CHIP | 0.1uF | 10% | 25V |
| C305 | 1-100-597-91 | CERAMIC CHIP | 0.1uF | 10% | 25V |
| C310 | 1-100-597-91 | CERAMIC CHIP | 0.1uF | 10% | 25V |
| C311 | 1-127-692-11 | CERAMIC CHIP | 10uF | 10% | 16V |
| C321 | 1-127-692-11 | CERAMIC CHIP | 10uF | 10% | 16V |
| C323 | 1-100-597-91 | CERAMIC CHIP | 0.1uF | 10% | 25V |
| C326 | 1-100-597-91 | CERAMIC CHIP | 0.1uF | 10% | 25V |
| C327 | 1-127-692-11 | CERAMIC CHIP | 10uF | 10% | 16V |
| C328 | 1-100-597-91 | CERAMIC CHIP | 0.1uF | 10% | 25V |
| C332 | 1-164-858-11 | CERAMIC CHIP | 22PF | 5% | 50V |
| C334 | 1-164-850-11 | CERAMIC CHIP | 10PF | 0.5PF | 50V |
| C335 | 1-127-692-11 | CERAMIC CHIP | 10uF | 10% | 16V |
| C336 | 1-100-597-91 | CERAMIC CHIP | 0.1uF | 10% | 25V |
| C337 | 1-124-779-00 | ELECT CHIP | 10uF | 20% | 16V |
| C338 | 1-100-597-91 | CERAMIC CHIP | 0.1uF | 10% | 25V |
| C339 | 1-100-597-91 | CERAMIC CHIP | 0.1uF | 10% | 25V |
| C340 | 1-100-597-91 | CERAMIC CHIP | 0.1uF | 10% | 25V |
| C341 | 1-100-597-91 | CERAMIC CHIP | 0.1uF | 10% | 25V |
| C342 | 1-100-597-91 | CERAMIC CHIP | 0.1uF | 10% | 25V |
| C344 | 1-100-597-91 | CERAMIC CHIP | 0.1uF | 10% | 25V |
| C345 | 1-100-597-91 | CERAMIC CHIP | 0.1uF | 10% | 25V |
| C346 | 1-100-597-91 | CERAMIC CHIP | 0.1uF | 10% | 25V |
| C347 | 1-100-597-91 | CERAMIC CHIP | 0.1uF | 10% | 25V |
| C411 | 1-100-597-91 | CERAMIC CHIP | 0.1uF | 10% | 25V |
| C415 | 1-100-597-91 | CERAMIC CHIP | 0.1uF | 10% | 25V |
| C426 | 1-100-597-91 | CERAMIC CHIP | 0.1uF | 10% | 25V |
| C435 | 1-100-597-91 | CERAMIC CHIP | 0.1uF | 10% | 25V |
| C501 | 1-112-300-91 | CERAMIC CHIP | 4.7uF | 10% | 10V |
| C502 | 1-112-300-91 | CERAMIC CHIP | 4.7uF | 10% | 10V |
| C503 | 1-112-300-91 | CERAMIC CHIP | 4.7uF | 10% | 10V |
| C509 | 1-112-300-91 | CERAMIC CHIP | 4.7uF | 10% | 10V |
| C513 | 1-164-935-11 | CERAMIC CHIP | 470PF | 10% | 50V |
| C518 | 1-100-597-91 | CERAMIC CHIP | 0.1uF | 10% | 25V |
| C521 | 1-164-933-11 | CERAMIC CHIP | 220PF | 10% | 50V |
| C522 | 1-164-933-11 | CERAMIC CHIP | 220PF | 10% | 50V |
| C524 | 1-165-908-11 | CERAMIC CHIP | 1uF | 10% | 10V |
| C528 | 1-118-021-91 | CERAMIC CHIP | 0.12uF | 10% | 16V |
| C540 | 1-112-300-91 | CERAMIC CHIP | 4.7uF | 10% | 10V |
| C541 | 1-112-300-91 | CERAMIC CHIP | 4.7uF | 10% | 10V |
| C542 | 1-112-300-91 | CERAMIC CHIP | 4.7uF | 10% | 10V |
| C543 | 1-112-300-91 | CERAMIC CHIP | 4.7uF | 10% | 10V |
| C545 | 1-112-300-91 | CERAMIC CHIP | 4.7uF | 10% | 10V |
| C546 | 1-112-300-91 | CERAMIC CHIP | 4.7uF | 10% | 10V |
| C547 | 1-125-891-11 | CERAMIC CHIP | 0.47uF | 10% | 10V |
| C548 | 1-117-681-11 | ELECT CHIP | 100uF | 20% | 16V |

| Ref. No. | Part No. | Description | | | Remark |
|---|---|---|---|---|---|
| C549 | 1-100-597-91 | CERAMIC CHIP | 0.1uF | 10% | 25V |
| C551 | 1-100-597-91 | CERAMIC CHIP | 0.1uF | 10% | 25V |
| C554 | 1-112-300-91 | CERAMIC CHIP | 4.7uF | 10% | 10V |
| C556 | 1-112-300-91 | CERAMIC CHIP | 4.7uF | 10% | 10V |
| C557 | 1-100-597-91 | CERAMIC CHIP | 0.1uF | 10% | 25V |
| C558 | 1-137-765-21 | ELECT CHIP | 47uF | 20% | 16V |
| C559 | 1-100-597-91 | CERAMIC CHIP | 0.1uF | 10% | 25V |
| C561 | 1-117-949-81 | CERAMIC CHIP | 820PF | 10% | 50V |
| C562 | 1-112-692-11 | CERAMIC CHIP | 1000PF | 5% | 50V |
| C564 | 1-112-692-11 | CERAMIC CHIP | 1000PF | 5% | 50V |
| C565 | 1-117-949-81 | CERAMIC CHIP | 820PF | 10% | 50V |
| C566 | 1-164-935-11 | CERAMIC CHIP | 470PF | 10% | 50V |
| C567 | 1-164-935-11 | CERAMIC CHIP | 470PF | 10% | 50V |
| C568 | 1-112-300-91 | CERAMIC CHIP | 4.7uF | 10% | 10V |
| C570 | 1-112-300-91 | CERAMIC CHIP | 4.7uF | 10% | 10V |
| C583 | 1-112-300-91 | CERAMIC CHIP | 4.7uF | 10% | 10V |
| C605 | 1-112-300-91 | CERAMIC CHIP | 4.7uF | 10% | 10V |
| C615 | 1-112-300-91 | CERAMIC CHIP | 4.7uF | 10% | 10V |
| C617 | 1-118-021-91 | CERAMIC CHIP | 0.12uF | 10% | 16V |
| C620 | 1-124-779-00 | ELECT CHIP | 10uF | 20% | 16V |
| C627 | 1-100-597-91 | CERAMIC CHIP | 0.1uF | 10% | 25V |
| C629 | 1-112-300-91 | CERAMIC CHIP | 4.7uF | 10% | 10V |
| C648 | 1-100-597-91 | CERAMIC CHIP | 0.1uF | 10% | 25V |
| C649 | 1-117-681-11 | ELECT CHIP | 100uF | 20% | 16V |
| C651 | 1-117-681-11 | ELECT CHIP | 100uF | 20% | 16V |
| C659 | 1-100-597-91 | CERAMIC CHIP | 0.1uF | 10% | 25V |
| C661 | 1-124-779-00 | ELECT CHIP | 10uF | 20% | 16V |
| C662 | 1-124-779-00 | ELECT CHIP | 10uF | 20% | 16V |
| C674 | 1-100-597-91 | CERAMIC CHIP | 0.1uF | 10% | 25V |
| C676 | 1-100-597-91 | CERAMIC CHIP | 0.1uF | 10% | 25V |
| C678 | 1-100-597-91 | CERAMIC CHIP | 0.1uF | 10% | 25V |
| C680 | 1-118-022-91 | CERAMIC CHIP | 0.15uF | 10% | 16V |
| C686 | 1-100-597-91 | CERAMIC CHIP | 0.1uF | 10% | 25V |
| C691 | 1-100-597-91 | CERAMIC CHIP | 0.1uF | 10% | 25V |
| C694 | 1-100-597-91 | CERAMIC CHIP | 0.1uF | 10% | 25V |
| C697 | 1-100-597-91 | CERAMIC CHIP | 0.1uF | 10% | 25V |
| C698 | 1-118-022-91 | CERAMIC CHIP | 0.15uF | 10% | 16V |
| C707 | 1-100-597-91 | CERAMIC CHIP | 0.1uF | 10% | 25V |
| C722 | 1-162-960-11 | CERAMIC CHIP | 220PF | 10% | 50V |
| C723 | 1-162-960-11 | CERAMIC CHIP | 220PF | 10% | 50V |
| C724 | 1-162-960-11 | CERAMIC CHIP | 220PF | 10% | 50V |
| C725 | 1-162-960-11 | CERAMIC CHIP | 220PF | 10% | 50V |
| C726 | 1-100-385-91 | CERAMIC CHIP | 0.47uF | | 25V |
| C748 | 1-100-597-91 | CERAMIC CHIP | 0.1uF | 10% | 25V |
| C754 | 1-165-908-11 | CERAMIC CHIP | 1uF | 10% | 10V |
| C760 | 1-124-779-00 | ELECT CHIP | 10uF | 20% | 16V |
| C761 | 1-124-779-00 | ELECT CHIP | 10uF | 20% | 16V |
| C767 | 1-164-935-11 | CERAMIC CHIP | 470PF | 10% | 50V |
| C768 | 1-164-935-11 | CERAMIC CHIP | 470PF | 10% | 50V |
| C769 | 1-164-935-11 | CERAMIC CHIP | 470PF | 10% | 50V |
| C770 | 1-164-935-11 | CERAMIC CHIP | 470PF | 10% | 50V |
| C771 | 1-124-779-00 | ELECT CHIP | 10uF | 20% | 16V |
| C772 | 1-124-779-00 | ELECT CHIP | 10uF | 20% | 16V |
| C774 | 1-162-919-11 | CERAMIC CHIP | 22PF | 5% | 50V |
| C776 | 1-162-919-11 | CERAMIC CHIP | 22PF | 5% | 50V |

**Note 1:** Refer to the servicing notes “MAIN BOARD DISCRIMINATION” (page 5) for how to distinguish SUFFIX-11 and SUFFIX-12.

**Note 2:** A part of circuit composition of MAIN board (Suffix-12) has been changed in the midway of production. MAIN board (Suffix-12) that has not been changed appears as TYPE A, and the changed MAIN board (Suffix-12) appears as TYPE B.

**Note 3:** C242 (TYPE B) on the MAIN board (Suffix-12) cannot exchange with single. When this part on the MAIN board (Suffix-12) is damaged, remove IC103 and C242 (Combination: TYPE B) and replace with IC102 and C239 (Combination: TYPE A).

| Ref. No. | Part No. | Description | | | Remark |
|---|---|---|---|---|---|
| C777 | 1-124-779-00 | ELECT CHIP | 10uF | 20% | 16V |
| C778 | 1-124-779-00 | ELECT CHIP | 10uF | 20% | 16V |
| C780 | 1-162-919-11 | CERAMIC CHIP | 22PF | 5% | 50V |
| C782 | 1-162-919-11 | CERAMIC CHIP | 22PF | 5% | 50V |
| C783 | 1-124-779-00 | ELECT CHIP | 10uF | 20% | 16V |
| C784 | 1-124-779-00 | ELECT CHIP | 10uF | 20% | 16V |
| C800 | 1-164-937-11 | CERAMIC CHIP | 0.001uF | 10% | 50V |
| C801 | 1-164-937-11 | CERAMIC CHIP | 0.001uF | 10% | 50V |
| C802 | 1-164-937-11 | CERAMIC CHIP | 0.001uF | 10% | 50V |
| C803 | 1-164-937-11 | CERAMIC CHIP | 0.001uF | 10% | 50V |
| C804 | 1-164-937-11 | CERAMIC CHIP | 0.001uF | 10% | 50V |
| C805 | 1-164-937-11 | CERAMIC CHIP | 0.001uF | 10% | 50V |
| C806 | 1-164-937-11 | CERAMIC CHIP | 0.001uF | 10% | 50V |
| C807 | 1-164-937-11 | CERAMIC CHIP | 0.001uF | 10% | 50V |
| C808 | 1-164-937-11 | CERAMIC CHIP | 0.001uF | 10% | 50V |
| C809 | 1-164-937-11 | CERAMIC CHIP | 0.001uF | 10% | 50V |
| C810 | 1-164-937-11 | CERAMIC CHIP | 0.001uF | 10% | 50V |
| C811 | 1-164-937-11 | CERAMIC CHIP | 0.001uF | 10% | 50V |
| C812 | 1-125-777-11 | CERAMIC CHIP | 0.1uF | 10% | 10V |
| C813 | 1-100-597-91 | CERAMIC CHIP | 0.1uF | 10% | 25V |
| C820 | 1-126-936-11 | ELECT | 3300uF | 20% | 16V |
| C821 | 1-100-597-91 | CERAMIC CHIP | 0.1uF | 10% | 25V |
| C823 | 1-100-597-91 | CERAMIC CHIP | 0.1uF | 10% | 25V |
| C825 | 1-117-681-11 | ELECT CHIP | 100uF | 20% | 16V |
| C826 | 1-112-791-11 | ELECT CHIP | 100uF | 20% | 16V |
| C828 | 1-100-597-91 | CERAMIC CHIP | 0.1uF | 10% | 25V |
| C829 | 1-164-937-11 | CERAMIC CHIP | 0.001uF | 10% | 50V |
| C831 | 1-112-795-11 | ELECT CHIP | 22uF | 20% | 25V |
| C833 | 1-100-597-91 | CERAMIC CHIP | 0.1uF | 10% | 25V |
| C834 | 1-112-791-11 | ELECT CHIP | 100uF | 20% | 16V |
| C836 | 1-100-597-91 | CERAMIC CHIP | 0.1uF | 10% | 25V |
| C837 | 1-164-940-11 | CERAMIC CHIP | 0.0033uF | 10% | 16V |
| C839 | 1-112-795-11 | ELECT CHIP | 22uF | 20% | 25V |
| C840 | 1-100-597-91 | CERAMIC CHIP | 0.1uF | 10% | 25V |
| C841 | 1-112-791-11 | ELECT CHIP | 100uF | 20% | 16V |
| C843 | 1-100-597-91 | CERAMIC CHIP | 0.1uF | 10% | 25V |
| C844 | 1-164-939-11 | CERAMIC CHIP | 0.0022uF | 10% | 50V |
| C846 | 1-112-795-11 | ELECT CHIP | 22uF | 20% | 25V |
| C847 | 1-100-597-91 | CERAMIC CHIP | 0.1uF | 10% | 25V |
| C850 | 1-124-779-00 | ELECT CHIP | 10uF | 20% | 16V |
| C851 | 1-100-597-91 | CERAMIC CHIP | 0.1uF | 10% | 25V |
| C852 | 1-117-681-11 | ELECT CHIP | 100uF | 20% | 16V |
| C873 | 1-137-765-21 | ELECT CHIP | 47uF | 20% | 16V |
| C874 | 1-137-765-21 | ELECT CHIP | 47uF | 20% | 16V |
| C875 | 1-137-765-21 | ELECT CHIP | 47uF | 20% | 16V |
| C884 | 1-124-779-00 | ELECT CHIP | 10uF | 20% | 16V |
| C885 | 1-124-779-00 | ELECT CHIP | 10uF | 20% | 16V |
| C886 | 1-124-779-00 | ELECT CHIP | 10uF | 20% | 16V |
| C887 | 1-124-779-00 | ELECT CHIP | 10uF | 20% | 16V |
| C892 | 1-100-597-91 | CERAMIC CHIP | 0.1uF | 10% | 25V |
| C893 | 1-100-597-91 | CERAMIC CHIP | 0.1uF | 10% | 25V |
| C894 | 1-165-708-11 | ELECT CHIP | 47uF | 20% | 6.3V |
| | | < CONNECTOR > | | | |
| CN100 | 1-568-673-11 | CONNECTOR, BOARD TO BOARD 14P | | | |

| Ref. No. | Part No. | Description | Remark |
|---|---|---|---|
| CN102 | 1-568-673-11 | CONNECTOR, BOARD TO BOARD 14P | |
| CN105 | 1-784-784-11 | CONNECTOR, FFC 23P | |
| CN106 | 1-785-728-21 | PIN (PC BOARD), CONNECTOR 7P | |
| CN300 | 1-784-929-11 | PIN, CONNECTOR 14P | |
| CN302 | 1-794-509-11 | PIN, CONNECTOR (PC BOARD) (3P) | |
| CN700 | 1-785-468-51 | CONNECTOR, FFC/FPC 13P | |
| CN701 | 1-785-728-21 | PIN (PC BOARD), CONNECTOR 7P | |
| CN702 | 1-785-468-51 | CONNECTOR, FFC/FPC 13P | |
| CN703 | 1-568-826-11 | CONNECTOR, FFC 7P | |
| CN704 | 1-564-719-11 | PIN, CONNECTOR (SMALL TYPE) 3P (LED SPEAKER R) | |
| CN705 | 1-564-719-11 | PIN, CONNECTOR (SMALL TYPE) 3P (LED SPEAKER L) | |
| | | < DIODE > | |
| D167 | 6-500-848-01 | DIODE MC2840-T112-1 | |
| D231 | 6-502-961-01 | DI DA2J10100L | |
| D232 | 6-502-961-01 | DI DA2J10100L | |
| D233 | 6-500-334-01 | DIODE MC2836-T112-1 | |
| D267 | 6-502-961-01 | DI DA2J10100L | |
| D602 | 6-502-961-01 | DI DA2J10100L | |
| D704 | 6-500-848-01 | DIODE MC2840-T112-1 | |
| | | < TERMINAL, LUG > | |
| * ET300 | 1-780-408-11 | TERMINAL, LUG | |
| * ET302 | 1-780-408-11 | TERMINAL, LUG | |
| * ET800 | 1-780-408-11 | TERMINAL, LUG | |
| | | < FUSE > | |
| ⚠ F700 | 1-523-130-31 | FUSE 0.5A 50V | |
| | | < FERRITE BEAD > | |
| FB300 | 1-216-295-91 | SHORT CHIP 0 | |
| FB302 | 1-216-295-91 | SHORT CHIP 0 | |
| FB750 | 1-414-445-11 | FERRITE, EMI (SMD) (1608) | |
| FB751 | 1-414-445-11 | FERRITE, EMI (SMD) (1608) | |
| | | < IC > | |
| IC100 | A-1847-995-A | IC R5F3650KBDFA | |
| IC101 | 6-704-191-01 | IC S-80829CNNB-B8OT2G | |
| IC102 | 6-703-639-01 | IC TK11140CSCL-G (SUFFIX-11, SUFFIX-12 (TYPE A)) | |
| IC103 | (Not supplied) | IC XC6216B402MR (SUFFIX-12 (TYPE B)) | |
| IC300 | 6-716-675-01 | IC USB2512B-AEZG | |
| IC301 | 8-759-338-95 | IC NJM2903V (TE2) | |
| IC500 | 6-712-027-01 | IC R2A15216FP | |
| IC501 | 8-759-909-71 | IC BA4558F | |
| IC502 | 8-759-909-71 | IC BA4558F | |
| IC503 | 8-759-909-71 | IC BA4558F | |
| IC600 | 8-759-909-71 | IC BA4558F | |
| IC800 | 6-716-554-11 | IC BD9329AEFJ-E2 | |
| IC801 | 6-716-554-11 | IC BD9329AEFJ-E2 | |
| IC802 | 6-716-554-11 | IC BD9329AEFJ-E2 | |
| IC803 | 6-715-078-01 | IC KIA7809AF/API | |
| IC804 | 6-716-739-01 | IC BD00GC0WEFJ-SE2 | |

**Note 1:** Refer to the servicing notes “MAIN BOARD DISCRIMINATION” (page 5) for how to distinguish SUFFIX-11 and SUFFIX-12.

**Note 2:** A part of circuit composition of MAIN board (Suffix-12) has been changed in the midway of production. MAIN board (Suffix-12) that has not been changed appears as TYPE A, and the changed MAIN board (Suffix-12) appears as TYPE B.

**Note 3:** IC103 (TYPE B) on the MAIN board (Suffix-12) cannot exchange with single. When this part on the MAIN board (Suffix-12) is damaged, remove IC103 and C242 (Combination: TYPE B) and replace with IC102 and C239 (Combination: TYPE A).

| Ref. No. | Part No. | Description | | | Remark |
|---|---|---|---|---|---|
| IC805 | 8-759-909-71 | IC BA4558F | | | |
| | | < JACK > | | | |
| J500 | 1-794-981-11 | JACK, PIN 4P (GAME AUDIO IN R/L, DVD/SAT AUDIO IN R/L) | | | |
| | | < COIL > | | | |
| L751 | 1-414-406-11 | INDUCTOR | 220uH | | |
| L803 | 1-481-903-11 | INDUCTOR | 33uH | | |
| L804 | 1-481-903-11 | INDUCTOR | 33uH | | |
| L805 | 1-481-903-11 | INDUCTOR | 33uH | | |
| L806 | 1-481-903-11 | INDUCTOR | 33uH | | |
| L807 | 1-481-903-11 | INDUCTOR | 33uH | | |
| L808 | 1-481-903-11 | INDUCTOR | 33uH | | |
| | | < TRANSISTOR > | | | |
| Q200 | 8-729-038-23 | TRANSISTOR | RT1N141C-TP-1 | | |
| Q203 | 8-729-038-37 | TRANSISTOR | RT1N141M-TP-1 | | |
| Q204 | 8-729-038-23 | TRANSISTOR | RT1N141C-TP-1 | | |
| Q205 | 6-550-363-01 | TRANSISTOR | 2SB1690KT146 | | |
| Q207 | 8-729-027-23 | TRANSISTOR | DTA114EKA-T146 | | |
| Q301 | 6-552-681-01 | TR RT3NDDM-T111-1 | | | |
| Q303 | 8-729-038-23 | TRANSISTOR | RT1N141C-TP-1 | | |
| Q518 | 8-729-620-13 | TRANSISTOR | 2SC4154TP-1EF | | |
| Q528 | 8-729-620-13 | TRANSISTOR | 2SC4154TP-1EF | | |
| Q600 | 6-551-272-01 | TRANSISTOR | RT3CLLM | | |
| Q601 | 6-551-272-01 | TRANSISTOR | RT3CLLM | | |
| Q604 | 6-551-939-01 | TR RT3TAAM-TP-1 | | | |
| Q605 | 6-551-939-01 | TR RT3TAAM-TP-1 | | | |
| Q606 | 6-551-939-01 | TR RT3TAAM-TP-1 | | | |
| Q607 | 6-551-939-01 | TR RT3TAAM-TP-1 | | | |
| Q800 | 6-550-363-01 | TRANSISTOR | 2SB1690KT146 | | |
| Q801 | 8-729-038-23 | TRANSISTOR | RT1N141C-TP-1 | | |
| Q803 | 6-551-551-01 | TRANSISTOR | RT3N77M-TP-1 | | |
| Q804 | 6-550-363-01 | TRANSISTOR | 2SB1690KT146 | | |
| Q805 | 6-550-363-01 | TRANSISTOR | 2SB1690KT146 | | |
| | | < RESISTOR > | | | |
| R100 | 1-218-949-11 | METAL CHIP | 470 | 5% | 1/16W |
| R102 | 1-218-949-11 | METAL CHIP | 470 | 5% | 1/16W |
| R103 | 1-218-941-81 | METAL CHIP | 100 | 5% | 1/16W |
| R104 | 1-218-941-81 | METAL CHIP | 100 | 5% | 1/16W |
| R105 | 1-218-941-81 | METAL CHIP | 100 | 5% | 1/16W |
| R107 | 1-218-941-81 | METAL CHIP | 100 | 5% | 1/16W |
| R109 | 1-218-979-11 | METAL CHIP | 150K | 5% | 1/16W |
| R110 | 1-245-604-11 | METAL CHIP | 10M | 5% | 1/16W |
| R111 | 1-218-981-91 | METAL CHIP | 220K | 5% | 1/16W |
| R113 | 1-218-989-11 | METAL CHIP | 1M | 5% | 1/16W |
| R118 | 1-216-809-11 | METAL CHIP | 100 | 5% | 1/10W |
| R119 | 1-218-973-11 | METAL CHIP | 47K | 5% | 1/16W |
| R120 | 1-218-941-81 | METAL CHIP | 100 | 5% | 1/16W |
| R121 | 1-218-945-11 | METAL CHIP | 220 | 5% | 1/16W |
| R122 | 1-218-941-81 | METAL CHIP | 100 | 5% | 1/16W |
| R124 | 1-218-941-81 | METAL CHIP | 100 | 5% | 1/16W |
| R125 | 1-218-941-81 | METAL CHIP | 100 | 5% | 1/16W |
| R126 | 1-218-941-81 | METAL CHIP | 100 | 5% | 1/16W |
| R127 | 1-218-965-11 | METAL CHIP | 10K | 5% | 1/16W |
| R128 | 1-218-965-11 | METAL CHIP | 10K | 5% | 1/16W |
| R129 | 1-218-965-11 | METAL CHIP | 10K | 5% | 1/16W |
| R130 | 1-218-965-11 | METAL CHIP | 10K | 5% | 1/16W |

| Ref. No. | Part No. | Description | | | Remark |
|---|---|---|---|---|---|
| R134 | 1-218-973-11 | METAL CHIP | 47K | 5% | 1/16W |
| R135 | 1-218-941-81 | METAL CHIP | 100 | 5% | 1/16W |
| R136 | 1-218-941-81 | METAL CHIP | 100 | 5% | 1/16W |
| R137 | 1-218-941-81 | METAL CHIP | 100 | 5% | 1/16W |
| R138 | 1-218-941-81 | METAL CHIP | 100 | 5% | 1/16W |
| R146 | 1-218-965-11 | METAL CHIP | 10K | 5% | 1/16W |
| R158 | 1-218-941-81 | METAL CHIP | 100 | 5% | 1/16W |
| R159 | 1-218-941-81 | METAL CHIP | 100 | 5% | 1/16W |
| R160 | 1-218-941-81 | METAL CHIP | 100 | 5% | 1/16W |
| R161 | 1-218-941-81 | METAL CHIP | 100 | 5% | 1/16W |
| R163 | 1-218-941-81 | METAL CHIP | 100 | 5% | 1/16W |
| R167 | 1-218-977-11 | METAL CHIP | 100K | 5% | 1/16W |
| R170 | 1-218-941-81 | METAL CHIP | 100 | 5% | 1/16W |
| R171 | 1-218-941-81 | METAL CHIP | 100 | 5% | 1/16W |
| R172 | 1-218-941-81 | METAL CHIP | 100 | 5% | 1/16W |
| R174 | 1-218-949-11 | METAL CHIP | 470 | 5% | 1/16W |
| R175 | 1-218-965-11 | METAL CHIP | 10K | 5% | 1/16W |
| R177 | 1-218-941-81 | METAL CHIP | 100 | 5% | 1/16W |
| R178 | 1-218-941-81 | METAL CHIP | 100 | 5% | 1/16W |
| R180 | 1-218-965-11 | METAL CHIP | 10K | 5% | 1/16W |
| R184 | 1-216-809-11 | METAL CHIP | 100 | 5% | 1/10W |
| R186 | 1-216-833-11 | METAL CHIP | 10K | 5% | 1/10W |
| R189 | 1-216-809-11 | METAL CHIP | 100 | 5% | 1/10W |
| R190 | 1-218-953-11 | METAL CHIP | 1K | 5% | 1/16W (E2, E51, MX) |
| R190 | 1-218-961-11 | METAL CHIP | 4.7K | 5% | 1/16W (SAF, EA) |
| R194 | 1-218-949-11 | METAL CHIP | 470 | 5% | 1/16W |
| R197 | 1-218-965-11 | METAL CHIP | 10K | 5% | 1/16W |
| R213 | 1-218-990-81 | SHORT CHIP | 0 | | |
| R222 | 1-218-961-11 | METAL CHIP | 4.7K | 5% | 1/16W |
| R224 | 1-218-961-11 | METAL CHIP | 4.7K | 5% | 1/16W |
| R225 | 1-218-977-11 | METAL CHIP | 100K | 5% | 1/16W |
| R226 | 1-218-990-81 | SHORT CHIP | 0 | | |
| R229 | 1-218-941-81 | METAL CHIP | 100 | 5% | 1/16W |
| R230 | 1-218-941-81 | METAL CHIP | 100 | 5% | 1/16W |
| R231 | 1-218-965-11 | METAL CHIP | 10K | 5% | 1/16W |
| R232 | 1-218-961-11 | METAL CHIP | 4.7K | 5% | 1/16W |
| R238 | 1-218-965-11 | METAL CHIP | 10K | 5% | 1/16W |
| R239 | 1-218-990-81 | SHORT CHIP | 0 (SUFFIX-11) | | |
| R241 | 1-218-965-11 | METAL CHIP | 10K | 5% | 1/16W |
| R242 | 1-218-990-81 | SHORT CHIP | 0 (SUFFIX-11) | | |
| R243 | 1-218-990-81 | SHORT CHIP | 0 (SUFFIX-11) | | |
| R258 | 1-216-829-11 | METAL CHIP | 4.7K | 5% | 1/10W |
| R259 | 1-218-965-11 | METAL CHIP | 10K | 5% | 1/16W |
| R261 | 1-218-965-11 | METAL CHIP | 10K | 5% | 1/16W |
| R262 | 1-216-841-11 | METAL CHIP | 47K | 5% | 1/10W |
| R263 | 1-218-985-11 | METAL CHIP | 470K | 5% | 1/16W |
| R264 | 1-218-957-11 | METAL CHIP | 2.2K | 5% | 1/16W |
| R271 | 1-218-965-11 | METAL CHIP | 10K | 5% | 1/16W |
| R272 | 1-218-965-11 | METAL CHIP | 10K | 5% | 1/16W |
| R274 | 1-218-967-11 | METAL CHIP | 15K | 5% | 1/16W |
| R277 | 1-218-955-11 | METAL CHIP | 1.5K | 5% | 1/16W |
| R278 | 1-218-955-11 | METAL CHIP | 1.5K | 5% | 1/16W |
| R285 | 1-216-833-11 | METAL CHIP | 10K | 5% | 1/10W |
| R290 | 1-218-947-11 | METAL CHIP | 330 | 5% | 1/16W (SAF) |
| R290 | 1-218-953-11 | METAL CHIP | 1K | 5% | 1/16W (EA) |
| R290 | 1-218-961-11 | METAL CHIP | 4.7K | 5% | 1/16W (E2, E51, MX) |

**Note:** Refer to the servicing notes "MAIN BOARD DISCRIMINATION" (page 5) for how to distinguish SUFFIX-11 and SUFFIX-12.

| Ref. No. | Part No. | Description | | | Remark |
|---|---|---|---|---|---|
| R290 | 1-218-990-81 | SHORT CHIP | 0 (MY) | | |
| R294 | 1-218-967-11 | METAL CHIP | 15K | 5% | 1/16W |
| R322 | 1-218-977-11 | METAL CHIP | 100K | 5% | 1/16W |
| R324 | 1-218-977-11 | METAL CHIP | 100K | 5% | 1/16W |
| R325 | 1-218-977-11 | METAL CHIP | 100K | 5% | 1/16W |
| R326 | 1-218-945-11 | METAL CHIP | 220 | 5% | 1/16W |
| R327 | 1-218-945-11 | METAL CHIP | 220 | 5% | 1/16W |
| R328 | 1-218-977-11 | METAL CHIP | 100K | 5% | 1/16W |
| R330 | 1-218-990-81 | SHORT CHIP | 0 | | |
| R331 | 1-218-990-81 | SHORT CHIP | 0 | | |
| R332 | 1-218-989-11 | METAL CHIP | 1M | 5% | 1/16W |
| R333 | 1-218-990-81 | SHORT CHIP | 0 | | |
| R335 | 1-218-873-11 | METAL CHIP | 12K | 0.5% | 1/10W |
| R337 | 1-218-879-11 | METAL CHIP | 22K | 0.5% | 1/10W |
| R338 | 1-218-879-11 | METAL CHIP | 22K | 0.5% | 1/10W |
| R339 | 1-218-941-81 | METAL CHIP | 100 | 5% | 1/16W |
| R340 | 1-218-941-81 | METAL CHIP | 100 | 5% | 1/16W |
| R341 | 1-218-835-11 | METAL CHIP | 330 | 0.5% | 1/10W |
| R342 | 1-218-835-11 | METAL CHIP | 330 | 0.5% | 1/10W |
| R343 | 1-248-311-11 | RES-CHIP | 0.1 | 1% | 1/4W |
| R344 | 1-248-311-11 | RES-CHIP | 0.1 | 1% | 1/4W |
| R426 | 1-218-977-11 | METAL CHIP | 100K | 5% | 1/16W |
| R502 | 1-218-941-81 | METAL CHIP | 100 | 5% | 1/16W |
| R509 | 1-216-809-11 | METAL CHIP | 100 | 5% | 1/10W |
| R518 | 1-216-833-11 | METAL CHIP | 10K | 5% | 1/10W |
| R519 | 1-216-826-11 | METAL CHIP | 2.7K | 5% | 1/10W |
| R521 | 1-218-949-11 | METAL CHIP | 470 | 5% | 1/16W |
| R522 | 1-218-949-11 | METAL CHIP | 470 | 5% | 1/16W |
| R526 | 1-218-990-81 | SHORT CHIP | 0 | | |
| R527 | 1-218-941-81 | METAL CHIP | 100 | 5% | 1/16W |
| R528 | 1-216-833-11 | METAL CHIP | 10K | 5% | 1/10W |
| R541 | 1-218-941-81 | METAL CHIP | 100 | 5% | 1/16W |
| R542 | 1-216-821-11 | METAL CHIP | 1K | 5% | 1/10W |
| R543 | 1-216-845-11 | METAL CHIP | 100K | 5% | 1/10W |
| R544 | 1-216-801-11 | METAL CHIP | 22 | 5% | 1/10W |
| R545 | 1-218-960-11 | METAL CHIP | 3.9K | 5% | 1/16W |
| R546 | 1-218-961-11 | METAL CHIP | 4.7K | 5% | 1/16W |
| R547 | 1-218-958-11 | METAL CHIP | 2.7K | 5% | 1/16W |
| R548 | 1-218-960-11 | METAL CHIP | 3.9K | 5% | 1/16W |
| R549 | 1-218-958-11 | METAL CHIP | 2.7K | 5% | 1/16W |
| R550 | 1-218-958-11 | METAL CHIP | 2.7K | 5% | 1/16W |
| R551 | 1-218-958-11 | METAL CHIP | 2.7K | 5% | 1/16W |
| R552 | 1-218-961-11 | METAL CHIP | 4.7K | 5% | 1/16W |
| R557 | 1-218-965-11 | METAL CHIP | 10K | 5% | 1/16W |
| R558 | 1-218-965-11 | METAL CHIP | 10K | 5% | 1/16W |
| R559 | 1-218-959-11 | METAL CHIP | 3.3K | 5% | 1/16W |
| R560 | 1-218-959-11 | METAL CHIP | 3.3K | 5% | 1/16W |
| R602 | 1-218-959-11 | METAL CHIP | 3.3K | 5% | 1/16W |
| R603 | 1-218-961-11 | METAL CHIP | 4.7K | 5% | 1/16W |
| R612 | 1-218-989-11 | METAL CHIP | 1M | 5% | 1/16W |
| R619 | 1-218-990-81 | SHORT CHIP | 0 | | |
| R620 | 1-216-841-11 | METAL CHIP | 47K | 5% | 1/10W |
| R626 | 1-216-826-11 | METAL CHIP | 2.7K | 5% | 1/10W |
| R628 | 1-216-841-11 | METAL CHIP | 47K | 5% | 1/10W |
| R657 | 1-216-864-11 | SHORT CHIP | 0 | | |
| R658 | 1-216-864-11 | SHORT CHIP | 0 | | |
| R659 | 1-216-864-11 | SHORT CHIP | 0 | | |
| R662 | 1-216-864-11 | SHORT CHIP | 0 | | |
| R673 | 1-216-835-11 | METAL CHIP | 15K | 5% | 1/10W |
| R674 | 1-216-833-11 | METAL CHIP | 10K | 5% | 1/10W |

| Ref. No. | Part No. | Description | | | Remark |
|---|---|---|---|---|---|
| R675 | 1-218-959-11 | METAL CHIP | 3.3K | 5% | 1/16W |
| R676 | 1-216-833-11 | METAL CHIP | 10K | 5% | 1/10W |
| R677 | 1-216-845-11 | METAL CHIP | 100K | 5% | 1/10W |
| R678 | 1-216-845-11 | METAL CHIP | 100K | 5% | 1/10W |
| R679 | 1-218-971-11 | METAL CHIP | 33K | 5% | 1/16W |
| R680 | 1-216-833-11 | METAL CHIP | 10K | 5% | 1/10W |
| R688 | 1-216-835-11 | METAL CHIP | 15K | 5% | 1/10W |
| R689 | 1-216-833-11 | METAL CHIP | 10K | 5% | 1/10W |
| R690 | 1-218-959-11 | METAL CHIP | 3.3K | 5% | 1/16W |
| R691 | 1-216-833-11 | METAL CHIP | 10K | 5% | 1/10W |
| R692 | 1-216-833-11 | METAL CHIP | 10K | 5% | 1/10W |
| R696 | 1-216-845-11 | METAL CHIP | 100K | 5% | 1/10W |
| R697 | 1-216-845-11 | METAL CHIP | 100K | 5% | 1/10W |
| R698 | 1-218-971-11 | METAL CHIP | 33K | 5% | 1/16W |
| R725 | 1-257-173-91 | METAL CHIP | 560 | 5% | 1/3W |
| R726 | 1-257-173-91 | METAL CHIP | 560 | 5% | 1/3W |
| R727 | 1-257-173-91 | METAL CHIP | 560 | 5% | 1/3W |
| R728 | 1-257-173-91 | METAL CHIP | 560 | 5% | 1/3W |
| R739 | 1-218-970-11 | METAL CHIP | 27K | 5% | 1/16W |
| R740 | 1-218-970-11 | METAL CHIP | 27K | 5% | 1/16W |
| R741 | 1-218-971-11 | METAL CHIP | 33K | 5% | 1/16W |
| R742 | 1-218-971-11 | METAL CHIP | 33K | 5% | 1/16W |
| R743 | 1-218-970-11 | METAL CHIP | 27K | 5% | 1/16W |
| R744 | 1-216-295-91 | SHORT CHIP | 0 | | |
| R745 | 1-216-295-91 | SHORT CHIP | 0 | | |
| R747 | 1-218-970-11 | METAL CHIP | 27K | 5% | 1/16W |
| R748 | 1-218-971-11 | METAL CHIP | 33K | 5% | 1/16W |
| R749 | 1-218-971-11 | METAL CHIP | 33K | 5% | 1/16W |
| R751 | 1-218-990-81 | SHORT CHIP | 0 | | |
| R763 | 1-218-990-81 | SHORT CHIP | 0 | | |
| R782 | 1-216-809-11 | METAL CHIP | 100 | 5% | 1/10W |
| R783 | 1-218-957-11 | METAL CHIP | 2.2K | 5% | 1/16W |
| R784 | 1-218-957-11 | METAL CHIP | 2.2K | 5% | 1/16W |
| R785 | 1-216-809-11 | METAL CHIP | 100 | 5% | 1/10W |
| R786 | 1-216-829-11 | METAL CHIP | 4.7K | 5% | 1/10W |
| R787 | 1-216-829-11 | METAL CHIP | 4.7K | 5% | 1/10W |
| R788 | 1-216-809-11 | METAL CHIP | 100 | 5% | 1/10W |
| R789 | 1-218-957-11 | METAL CHIP | 2.2K | 5% | 1/16W |
| R790 | 1-218-957-11 | METAL CHIP | 2.2K | 5% | 1/16W |
| R791 | 1-216-809-11 | METAL CHIP | 100 | 5% | 1/10W |
| R792 | 1-216-829-11 | METAL CHIP | 4.7K | 5% | 1/10W |
| R793 | 1-216-829-11 | METAL CHIP | 4.7K | 5% | 1/10W |
| R794 | 1-218-961-11 | METAL CHIP | 4.7K | 5% | 1/16W |
| R795 | 1-216-841-11 | METAL CHIP | 47K | 5% | 1/10W |
| R796 | 1-216-841-11 | METAL CHIP | 47K | 5% | 1/10W |
| R797 | 1-218-961-11 | METAL CHIP | 4.7K | 5% | 1/16W |
| R798 | 1-218-990-81 | SHORT CHIP | 0 | | |
| R799 | 1-218-961-11 | METAL CHIP | 4.7K | 5% | 1/16W |
| R801 | 1-218-969-11 | METAL CHIP | 22K | 5% | 1/16W |
| R802 | 1-218-871-11 | METAL CHIP | 10K | 0.5% | 1/10W |
| R803 | 1-218-893-11 | METAL CHIP | 82K | 0.5% | 1/10W |
| R804 | 1-218-869-11 | METAL CHIP | 8.2K | 0.5% | 1/10W |
| R806 | 1-208-908-11 | METAL CHIP | 7.5K | 0.5% | 1/16W |
| R807 | 1-218-871-11 | METAL CHIP | 10K | 0.5% | 1/10W |
| R808 | 1-218-881-11 | METAL CHIP | 27K | 0.5% | 1/10W |
| R810 | 1-218-990-81 | SHORT CHIP | 0 | | |
| R812 | 1-218-966-11 | METAL CHIP | 12K | 5% | 1/16W |
| R814 | 1-218-871-11 | METAL CHIP | 10K | 0.5% | 1/10W |
| R815 | 1-218-887-11 | METAL CHIP | 47K | 0.5% | 1/10W |
| R816 | 1-218-990-81 | SHORT CHIP | 0 | | |

| Ref. No. | Part No. | Description | | | Remark |
|---|---|---|---|---|---|
| R817 | 1-218-990-81 | SHORT CHIP | 0 | | |
| R818 | 1-218-990-81 | SHORT CHIP | 0 | | |
| R819 | 1-218-965-11 | METAL CHIP | 10K | 5% | 1/16W |
| R820 | 1-216-829-11 | METAL CHIP | 4.7K | 5% | 1/10W |
| R821 | 1-218-973-11 | METAL CHIP | 47K | 5% | 1/16W |
| R822 | 1-218-973-11 | METAL CHIP | 47K | 5% | 1/16W |
| R823 | 1-218-871-11 | METAL CHIP | 10K | 0.5% | 1/10W |
| R824 | 1-218-881-11 | METAL CHIP | 27K | 0.5% | 1/10W |
| R825 | 1-218-881-11 | METAL CHIP | 27K | 0.5% | 1/10W |
| R826 | 1-218-977-11 | METAL CHIP | 100K | 5% | 1/16W |
| R827 | 1-218-977-11 | METAL CHIP | 100K | 5% | 1/16W |
| R828 | 1-218-990-81 | SHORT CHIP | 0 | | |
| R830 | 1-216-822-11 | METAL CHIP | 1.2K | 5% | 1/10W |
| R831 | 1-218-965-11 | METAL CHIP | 10K | 5% | 1/16W |
| R834 | 1-218-949-11 | METAL CHIP | 470 | 5% | 1/16W |
| R835 | 1-218-965-11 | METAL CHIP | 10K | 5% | 1/16W |
| R839 | 1-216-797-11 | METAL CHIP | 10 | 5% | 1/10W |
| R840 | 1-216-797-11 | METAL CHIP | 10 | 5% | 1/10W |
| R841 | 1-218-990-81 | SHORT CHIP | 0 | | |
| R842 | 1-218-933-11 | METAL CHIP | 22 | 5% | 1/16W |
| R843 | 1-218-933-11 | METAL CHIP | 22 | 5% | 1/16W |
| R844 | 1-218-933-11 | METAL CHIP | 22 | 5% | 1/16W |
| R847 | 1-218-990-81 | SHORT CHIP | 0 | | |
| R848 | 1-218-990-81 | SHORT CHIP | 0 | | |
| R850 | 1-216-841-11 | METAL CHIP | 47K | 5% | 1/10W |
| R851 | 1-216-841-11 | METAL CHIP | 47K | 5% | 1/10W |
| R852 | 1-218-990-81 | SHORT CHIP | 0 | | |
| R853 | 1-218-961-11 | METAL CHIP | 4.7K | 5% | 1/16W |
| R854 | 1-218-990-81 | SHORT CHIP | 0 | | |
| R855 | 1-216-295-91 | SHORT CHIP | 0 | | |
| R856 | 1-218-990-81 | SHORT CHIP | 0 | | |
| R857 | 1-218-990-81 | SHORT CHIP | 0 | | |
| R867 | 1-218-990-81 | SHORT CHIP | 0 | | |
| R869 | 1-218-961-11 | METAL CHIP | 4.7K | 5% | 1/16W |
| R870 | 1-218-961-11 | METAL CHIP | 4.7K | 5% | 1/16W |
| | | < COMPOSITION CIRCUIT BLOCK > | | | |
| RB131 | 1-234-372-11 | RES, NETWORK | 100 (1005X4) | | |
| RB140 | 1-234-372-11 | RES, NETWORK | 100 (1005X4) | | |
| RB185 | 1-234-372-11 | RES, NETWORK | 100 (1005X4) | | |
| | | < VIBRATOR > | | | |
| X110 | 1-814-273-11 | QUARTZ CRYSTAL UNIT | | | |
| X113 | 1-814-446-11 | QUARTZ CRYSTAL UNIT | | | |
| X332 | 1-814-306-11 | VIBRATOR, CRYSTAL | | | |

**********

MIC BOARD
*********

< CAPACITOR >

| Ref. No. | Part No. | Description | | | Remark |
|---|---|---|---|---|---|
| C1300 | 1-100-385-91 | CERAMIC CHIP | 0.47uF | | 25V |
| C1301 | 1-124-463-00 | ELECT | 0.1uF | 20% | 50V |
| C1302 | 1-124-261-00 | ELECT | 10uF | 20% | 50V |
| C1303 | 1-124-463-00 | ELECT | 0.1uF | 20% | 50V |
| C1304 | 1-124-463-00 | ELECT | 0.1uF | 20% | 50V |
| C1305 | 1-162-925-11 | CERAMIC CHIP | 68PF | 5% | 50V |
| C1306 | 1-124-257-00 | ELECT | 2.2uF | 20% | 50V |
| C1307 | 1-162-963-11 | CERAMIC CHIP | 680PF | 10% | 50V |
| C1308 | 1-162-924-11 | CERAMIC CHIP | 56PF | 5% | 50V |
| C1309 | 1-100-597-91 | CERAMIC CHIP | 0.1uF | 10% | 25V |
| C1310 | 1-100-597-91 | CERAMIC CHIP | 0.1uF | 10% | 25V |
| C1311 | 1-126-176-11 | ELECT | 220uF | 20% | 10V |
| C1312 | 1-162-924-11 | CERAMIC CHIP | 56PF | 5% | 50V |
| C1313 | 1-126-176-11 | ELECT | 220uF | 20% | 10V |
| C1314 | 1-162-964-11 | CERAMIC CHIP | 0.001uF | 10% | 50V |
| C1315 | 1-124-257-00 | ELECT | 2.2uF | 20% | 50V |
| C1317 | 1-162-964-11 | CERAMIC CHIP | 0.001uF | 10% | 50V |
| C1318 | 1-124-257-00 | ELECT | 2.2uF | 20% | 50V |
| C1319 | 1-124-257-00 | ELECT | 2.2uF | 20% | 50V |
| C1320 | 1-162-964-11 | CERAMIC CHIP | 0.001uF | 10% | 50V |
| C1321 | 1-100-597-91 | CERAMIC CHIP | 0.1uF | 10% | 25V |
| C1322 | 1-100-597-91 | CERAMIC CHIP | 0.1uF | 10% | 25V |
| C1323 | 1-115-416-11 | CERAMIC CHIP | 0.001uF | 5% | 25V |
| C1325 | 1-115-416-11 | CERAMIC CHIP | 0.001uF | 5% | 25V |
| | | < CONNECTOR > | | | |
| * CN1300 | 1-564-507-11 | PLUG, CONNECTOR 4P | | | |
| | | < DIODE > | | | |
| D1300 | 6-502-961-01 | DI DA2J10100L | | | |
| D1301 | 6-500-848-01 | DIODE MC2840-T112-1 | | | |
| D1302 | 6-500-848-01 | DIODE MC2840-T112-1 | | | |
| | | < IC > | | | |
| IC1300 | 8-759-909-71 | IC BA4558F | | | |
| | | < JACK > | | | |
| J1300 | 1-822-757-11 | JACK (LARGE TYPE) (MIC IN) | | | |
| | | < JUMPER RESISTOR > | | | |
| JR1300 | 1-216-296-11 | SHORT CHIP | 0 | | |
| JR1301 | 1-216-864-11 | SHORT CHIP | 0 | | |
| JR1303 | 1-216-864-11 | SHORT CHIP | 0 | | |
| JR1304 | 1-216-864-11 | SHORT CHIP | 0 | | |
| JR1305 | 1-216-864-11 | SHORT CHIP | 0 | | |
| JR1306 | 1-216-864-11 | SHORT CHIP | 0 | | |
| JR1308 | 1-216-296-11 | SHORT CHIP | 0 | | |
| JR1309 | 1-216-296-11 | SHORT CHIP | 0 | | |
| JR1310 | 1-216-296-11 | SHORT CHIP | 0 | | |
| | | < TRANSISTOR > | | | |
| Q1300 | 6-551-696-01 | TR ISA1235AC1-T112-1EF | | | |
| Q1301 | 8-729-055-10 | TR 2SK3378ENTL | | | |
| | | < RESISTOR > | | | |
| R1300 | 1-216-857-11 | METAL CHIP | 1M | 5% | 1/10W |
| R1301 | 1-216-857-11 | METAL CHIP | 1M | 5% | 1/10W |
| R1302 | 1-216-817-11 | METAL CHIP | 470 | 5% | 1/10W |
| R1303 | 1-216-849-11 | METAL CHIP | 220K | 5% | 1/10W |
| R1304 | 1-216-827-11 | METAL CHIP | 3.3K | 5% | 1/10W |
| R1305 | 1-216-833-11 | METAL CHIP | 10K | 5% | 1/10W |
| R1306 | 1-216-845-11 | METAL CHIP | 100K | 5% | 1/10W |
| R1307 | 1-216-845-11 | METAL CHIP | 100K | 5% | 1/10W |
| R1308 | 1-216-809-11 | METAL CHIP | 100 | 5% | 1/10W |
| R1309 | 1-216-833-11 | METAL CHIP | 10K | 5% | 1/10W |
| R1310 | 1-216-833-11 | METAL CHIP | 10K | 5% | 1/10W |
| R1311 | 1-216-833-11 | METAL CHIP | 10K | 5% | 1/10W |
| R1312 | 1-216-839-11 | METAL CHIP | 33K | 5% | 1/10W |

| Ref. No. | Part No. | Description | | | Remark |
|---|---|---|---|---|---|
| R1313 | 1-216-839-11 | METAL CHIP | 33K | 5% | 1/10W |
| R1314 | 1-216-821-11 | METAL CHIP | 1K | 5% | 1/10W |
| R1315 | 1-216-833-11 | METAL CHIP | 10K | 5% | 1/10W |
| R1316 | 1-216-821-11 | METAL CHIP | 1K | 5% | 1/10W |
| R1317 | 1-216-845-11 | METAL CHIP | 100K | 5% | 1/10W |
| | | < VARIABLE RESISTOR > | | | |
| RV1300 | 1-227-452-11 | RES, VAR, CARBON 50K (MIC LEVEL, MIN MAX) | | | |

**********

MS-214 BOARD
**********

When the MS-214 board is defective, exchange the entire MD (AU) ASSY.

**********

TUNER BOARD
**********

< CAPACITOR >

| | | | | | |
|---|---|---|---|---|---|
| C1603 | 1-164-935-11 | CERAMIC CHIP | 470PF | 10% | 50V |
| C1604 | 1-164-943-81 | CERAMIC CHIP | 0.01uF | 10% | 16V |
| C1605 | 1-112-717-91 | CERAMIC CHIP | 1uF | 10% | 6.3V |
| C1606 | 1-114-565-81 | CERAMIC CHIP | 0.047uF | 10% | 16V |
| C1608 | 1-125-777-11 | CERAMIC CHIP | 0.1uF | 10% | 10V |
| C1611 | 1-117-681-11 | ELECT CHIP | 100uF | 20% | 16V |
| C1612 | 1-100-415-91 | CERAMIC CHIP | 0.47uF | 10% | 6.3V |
| C1613 | 1-164-937-11 | CERAMIC CHIP | 0.001uF | 10% | 50V |
| C1614 | 1-164-943-81 | CERAMIC CHIP | 0.01uF | 10% | 16V |
| C1615 | 1-100-415-91 | CERAMIC CHIP | 0.47uF | 10% | 6.3V |
| C1616 | 1-100-415-91 | CERAMIC CHIP | 0.47uF | 10% | 6.3V |
| C1617 | 1-115-416-11 | CERAMIC CHIP | 0.001uF | 5% | 25V |
| C1618 | 1-115-416-11 | CERAMIC CHIP | 0.001uF | 5% | 25V |
| C1619 | 1-115-416-11 | CERAMIC CHIP | 0.001uF | 5% | 25V |
| C1620 | 1-115-416-11 | CERAMIC CHIP | 0.001uF | 5% | 25V |
| C1621 | 1-115-416-11 | CERAMIC CHIP | 0.001uF | 5% | 25V |
| C1622 | 1-115-416-11 | CERAMIC CHIP | 0.001uF | 5% | 25V |

< CONNECTOR >

| | | |
|---|---|---|
| CN1601 | 1-568-826-11 | CONNECTOR FFC 7P |
| * CN1602 | 1-506-680-11 | PLUG, CONNECTOR (2.5MM) 3P (FM/AM) |

< DIODE >

| | | |
|---|---|---|
| D1601 | 6-500-848-01 | DIODE MC2840-T112-1 |
| D1602 | 6-500-848-01 | DIODE MC2840-T112-1 |
| D1603 | 6-500-848-01 | DIODE MC2840-T112-1 |

< FLUORESCENT INDICATOR TUBE >

| | | |
|---|---|---|
| FL1601 | 1-236-711-21 | FILTER, BAND PASS |

< IC >

| | | |
|---|---|---|
| IC1601 | 6-716-993-01 | IC MM1836A33NRE |
| IC1602 | 6-716-361-01 | IC RS5B800-0002E2 |

< COIL >

| | | |
|---|---|---|
| L1601 | 1-457-998-11 | COIL, AM ANTENNA |
| * L1602 | 1-400-973-21 | INDUCTOR (EMI FERRITE) |
| * L1603 | 1-400-973-21 | INDUCTOR (EMI FERRITE) |

< RESISTOR >

| | | | | | |
|---|---|---|---|---|---|
| R1601 | 1-218-941-81 | METAL CHIP | 100 | 5% | 1/16W |
| R1602 | 1-218-941-81 | METAL CHIP | 100 | 5% | 1/16W |
| R1603 | 1-218-941-81 | METAL CHIP | 100 | 5% | 1/16W |
| R1604 | 1-218-965-11 | METAL CHIP | 10K | 5% | 1/16W |
| R1605 | 1-218-990-81 | SHORT CHIP | 0 | | |
| R1606 | 1-218-965-11 | METAL CHIP | 10K | 5% | 1/16W |
| R1607 | 1-218-990-81 | SHORT CHIP | 0 | | |
| R1608 | 1-218-941-81 | METAL CHIP | 100 | 5% | 1/16W |
| R1609 | 1-208-935-11 | METAL CHIP | 100K | 0.5% | 1/16W |

< VIBRATOR >

| | | |
|---|---|---|
| X1601 | 1-767-317-11 | VIBRATOR, CRYSTAL |

**********

| | | |
|---|---|---|
| | A-1820-972-A | USB BOARD, COMPLETE |

**********

< CAPACITOR >

| | | | | | |
|---|---|---|---|---|---|
| C1151 | 1-165-989-11 | CERAMIC CHIP | 10uF | 10% | 6.3V |
| C1154 | 1-165-989-11 | CERAMIC CHIP | 10uF | 10% | 6.3V |
| C1159 | 1-124-635-00 | ELECT | 220uF | 20% | 6.3V |
| C1160 | 1-124-635-00 | ELECT | 220uF | 20% | 6.3V |

< CONNECTOR >

| | | |
|---|---|---|
| CN1150 | 1-819-866-11 | CONNECTOR, USB (A) (•⇷ A PLAY) |
| CN1151 | 1-819-866-11 | CONNECTOR, USB (A) (•⇷ B PALY/REC) |

< DIODE >

| | | |
|---|---|---|
| D1150 | 6-503-388-01 | DI 1L0352B13F0MIT02 |
| D1151 | 6-503-388-01 | DI 1L0352B13F0MIT02 |
| D1154 | 6-503-224-02 | DI 1L0352V22F3MIT02 |
| D1155 | 6-500-848-01 | DIODE MC2840-T112-1 |
| D1156 | 6-500-848-01 | DIODE MC2840-T112-1 |
| D1157 | 6-500-848-01 | DIODE MC2840-T112-1 |
| D1158 | 6-500-848-01 | DIODE MC2840-T112-1 |
| D1159 | 6-502-970-01 | DI DZ2J068M0L |
| D1160 | 6-502-970-01 | DI DZ2J068M0L |
| D1162 | 6-502-970-01 | DI DZ2J068M0L |
| D1164 | 6-502-970-01 | DI DZ2J068M0L |
| D1165 | 6-502-970-01 | DI DZ2J068M0L |
| D1166 | 6-502-970-01 | DI DZ2J068M0L |

< JUMPER RESISTOR >

| | | | |
|---|---|---|---|
| JR1500 | 1-216-296-11 | SHORT CHIP | 0 |
| JR1501 | 1-216-296-11 | SHORT CHIP | 0 |
| JR1502 | 1-216-296-11 | SHORT CHIP | 0 |
| JR1503 | 1-216-296-11 | SHORT CHIP | 0 |
| JR1504 | 1-216-296-11 | SHORT CHIP | 0 |

< RESISTOR >

| | | | | | |
|---|---|---|---|---|---|
| R1150 | 1-257-173-91 | METAL CHIP | 560 | 5% | 1/3W |
| R1151 | 1-257-173-91 | METAL CHIP | 560 | 5% | 1/3W |
| R1152 | 1-257-173-91 | METAL CHIP | 560 | 5% | 1/3W |

**********

VOLUME BOARD
**********

< CAPACITOR >

| | | | | | |
|---|---|---|---|---|---|
| C1000 | 1-162-964-11 | CERAMIC CHIP | 0.001uF | 10% | 50V |

| Ref. No. | Part No. | Description | | | Remark |
|---|---|---|---|---|---|
| C1001 | 1-100-597-91 | CERAMIC CHIP | 0.1uF | 10% | 25V |
| C1005 | 1-124-584-00 | ELECT | 100uF | 20% | 6.3V |
| C1007 | 1-100-597-91 | CERAMIC CHIP | 0.1uF | 10% | 25V |
| C1008 | 1-100-597-91 | CERAMIC CHIP | 0.1uF | 10% | 25V |
| | | < CONNECTOR > | | | |
| CN1000 | 1-784-784-11 | CONNECTOR, FFC 23P | | | |
| | | < DIODE > | | | |
| D1000 | 6-503-224-02 | DI 1L0352V22F3MIT02 | | | |
| D1001 | 6-503-224-02 | DI 1L0352V22F3MIT02 | | | |
| D1002 | 6-503-224-02 | DI 1L0352V22F3MIT02 | | | |
| D1003 | 6-503-224-02 | DI 1L0352V22F3MIT02 | | | |
| D1004 | 6-503-224-02 | DI 1L0352V22F3MIT02 | | | |
| D1005 | 6-503-224-02 | DI 1L0352V22F3MIT02 | | | |
| | | < IC > | | | |
| IC1000 | 6-713-768-01 | IC R8A66166SP | | | |
| | | < JUMPER RESISTOR > | | | |
| JR1000 | 1-216-296-11 | SHORT CHIP | 0 | | |
| JR1002 | 1-216-296-11 | SHORT CHIP | 0 | | |
| JR1003 | 1-216-296-11 | SHORT CHIP | 0 | | |
| JR1004 | 1-216-296-11 | SHORT CHIP | 0 | | |
| JR1006 | 1-216-296-11 | SHORT CHIP | 0 | | |
| JR1007 | 1-216-296-11 | SHORT CHIP | 0 | | |
| JR1008 | 1-216-296-11 | SHORT CHIP | 0 | | |
| JR1009 | 1-216-296-11 | SHORT CHIP | 0 | | |
| JR1010 | 1-216-296-11 | SHORT CHIP | 0 | | |
| JR1011 | 1-216-296-11 | SHORT CHIP | 0 | | |
| JR1012 | 1-216-296-11 | SHORT CHIP | 0 | | |
| JR1013 | 1-216-296-11 | SHORT CHIP | 0 | | |
| JR1014 | 1-216-296-11 | SHORT CHIP | 0 | | |
| JR1015 | 1-216-296-11 | SHORT CHIP | 0 | | |
| JR1017 | 1-216-296-11 | SHORT CHIP | 0 | | |
| JR1019 | 1-216-296-11 | SHORT CHIP | 0 | | |
| JR1020 | 1-216-296-11 | SHORT CHIP | 0 | | |
| JR1021 | 1-216-296-11 | SHORT CHIP | 0 | | |
| JR1023 | 1-216-296-11 | SHORT CHIP | 0 | | |
| JR1024 | 1-216-296-11 | SHORT CHIP | 0 | | |
| JR1025 | 1-216-296-11 | SHORT CHIP | 0 | | |
| JR1026 | 1-216-296-11 | SHORT CHIP | 0 | | |
| JR1027 | 1-216-296-11 | SHORT CHIP | 0 | | |
| JR1028 | 1-216-296-11 | SHORT CHIP | 0 | | |
| JR1029 | 1-216-296-11 | SHORT CHIP | 0 | | |
| JR1030 | 1-216-296-11 | SHORT CHIP | 0 | | |
| JR1031 | 1-216-296-11 | SHORT CHIP | 0 | | |
| JR1034 | 1-216-296-11 | SHORT CHIP | 0 | | |
| JR1035 | 1-216-296-11 | SHORT CHIP | 0 | | |
| JR1036 | 1-216-296-11 | SHORT CHIP | 0 | | |
| JR1038 | 1-216-296-11 | SHORT CHIP | 0 | | |
| JR1039 | 1-216-864-11 | SHORT CHIP | 0 | | |
| JR1040 | 1-216-864-11 | SHORT CHIP | 0 | | |
| JR1042 | 1-216-864-11 | SHORT CHIP | 0 | | |
| | | < RESISTOR > | | | |
| R1000 | 1-216-833-11 | METAL CHIP | 10K | 5% | 1/10W |
| R1001 | 1-257-173-91 | METAL CHIP | 560 | 5% | 1/3W |
| R1002 | 1-257-173-91 | METAL CHIP | 560 | 5% | 1/3W |
| R1003 | 1-257-173-91 | METAL CHIP | 560 | 5% | 1/3W |

| Ref. No. | Part No. | Description | | | Remark |
|---|---|---|---|---|---|
| R1005 | 1-216-819-11 | METAL CHIP | 680 | 5% | 1/10W |
| R1006 | 1-216-821-11 | METAL CHIP | 1K | 5% | 1/10W |
| R1007 | 1-216-823-11 | METAL CHIP | 1.5K | 5% | 1/10W |
| R1008 | 1-216-833-11 | METAL CHIP | 10K | 5% | 1/10W |
| R1009 | 1-216-833-11 | METAL CHIP | 10K | 5% | 1/10W |
| R1010 | 1-216-833-11 | METAL CHIP | 10K | 5% | 1/10W |
| R1011 | 1-218-867-11 | METAL CHIP | 6.8K | 0.5% | 1/10W |
| R1012 | 1-257-173-91 | METAL CHIP | 560 | 5% | 1/3W |
| R1013 | 1-257-173-91 | METAL CHIP | 560 | 5% | 1/3W |
| R1014 | 1-257-173-91 | METAL CHIP | 560 | 5% | 1/3W |
| R1015 | 1-216-837-11 | METAL CHIP | 22K | 5% | 1/10W |
| R1016 | 1-216-833-11 | METAL CHIP | 10K | 5% | 1/10W |
| R1018 | 1-216-829-11 | METAL CHIP | 4.7K | 5% | 1/10W |
| R1019 | 1-216-833-11 | METAL CHIP | 10K | 5% | 1/10W |
| R1021 | 1-216-827-11 | METAL CHIP | 3.3K | 5% | 1/10W |
| R1022 | 1-216-835-11 | METAL CHIP | 15K | 5% | 1/10W |
| R1023 | 1-216-825-11 | METAL CHIP | 2.2K | 5% | 1/10W |
| R1024 | 1-216-837-11 | METAL CHIP | 22K | 5% | 1/10W |
| R1026 | 1-216-839-11 | METAL CHIP | 33K | 5% | 1/10W |
| R1027 | 1-216-823-11 | METAL CHIP | 1.5K | 5% | 1/10W |
| R1028 | 1-216-797-11 | METAL CHIP | 10 | 5% | 1/10W |
| R1029 | 1-257-173-91 | METAL CHIP | 560 | 5% | 1/3W |
| R1030 | 1-257-173-91 | METAL CHIP | 560 | 5% | 1/3W |
| R1031 | 1-257-173-91 | METAL CHIP | 560 | 5% | 1/3W |
| R1032 | 1-257-173-91 | METAL CHIP | 560 | 5% | 1/3W |
| | | < SWITCH > | | | |
| S1000 | 1-786-417-11 | ENCODER, ROTARY (VOLUME - O - DJ CONTROL) | | | |
| S1001 | 1-771-410-21 | SWITCH, TACTILE (ENTER) | | | |
| S1002 | 1-771-410-21 | SWITCH, TACTILE (🗁+) | | | |
| S1003 | 1-771-410-21 | SWITCH, TACTILE (■) | | | |
| S1004 | 1-771-410-21 | SWITCH, TACTILE (TUNING + ▶▶▷▷I) | | | |
| S1005 | 1-771-410-21 | SWITCH, TACTILE (PC) | | | |
| S1006 | 1-771-410-21 | SWITCH, TACTILE (CD) | | | |
| S1007 | 1-771-410-21 | SWITCH, TACTILE (TV) | | | |
| S1008 | 1-771-410-21 | SWITCH, TACTILE (USB/USB SELECT) | | | |
| S1009 | 1-771-410-21 | SWITCH, TACTILE (DVD/SAT) | | | |
| S1010 | 1-771-410-21 | SWITCH, TACTILE (TUNER/BAND) | | | |
| S1011 | 1-771-410-21 | SWITCH, TACTILE (OPTIONS) | | | |
| S1012 | 1-771-410-21 | SWITCH, TACTILE (GAME) | | | |
| S1013 | 1-771-410-21 | SWITCH, TACTILE (⏏ EJECT) | | | |

**********

VOLUME LED BOARD
**********

| | | | | | |
|---|---|---|---|---|---|
| | | < CONNECTOR > | | | |
| CN1290 | 1-564-719-11 | PIN, CONNECTOR (SMALL TYPE) 3P | | | |
| | | < DIODE > | | | |
| D1290 | 6-503-224-02 | DI 1L0352V22F3MIT02 | | | |
| | | < RESISTOR > | | | |
| R1290 | 1-257-173-91 | METAL CHIP | 560 | 5% | 1/3W |

**********

| Ref. No. | Part No. | Description | Remark |
|---|---|---|---|
| | | MISCELLANEOUS<br>********** | |
| 11 | 1-828-944-51 | WIRE (FLAT TYPE) (7 CORE) | |
| 53 | 1-829-021-51 | WIRE (FLAT TYPE) (23 CORE) | |
| 152 | 1-828-328-51 | WIRE (FLAT TYPE) (13 CORE) | |
| 157 | 1-474-315-11 | SWITCHING REGULATOR | |
| 158 | 1-837-344-11 | CORD, POWER SUPPLY (E2, E51, MX) | |
| 158 | 1-838-939-11 | CORD, POWER (SAF) | |
| 158 | 1-838-969-11 | POWER-SUPPLY CORD (EA, MY) | |
| 159 | 1-457-369-12 | CORE, FERRITE | |
| 161 | 1-569-007-12 | ADAPTOR, CONVERSION 2P (E2, E51) | |
| 201 | A-1114-646-A | MD (AU) ASSY (including MS-214 board) | |
| 203 | 1-828-252-51 | WIRE (FLAT TYPE) (24 CORE) | |
| ⚠ 206 | 8-820-322-04 | DEVICE, OPTICAL KHM-313CAB/C2RP<br>(including sled motor, spindle motor) | |
| 207 | 1-828-300-11 | WIRE (FLAT TYPE) (7 CORE) | |
| FL901 | 1-483-367-11 | VACUUM FLUORESCENT DISPLAY | |
| ⚠ M891 | 1-855-006-11 | FAN, DC | |

**********

| Ref. No. | Part No. | Description | Remark |
|---|---|---|---|

**Note:** If wire (flat type) is replaced, install it after bending it in the same form as that before replacement.

## REVISION HISTORY

Checking the version allows you to jump to the revised page.
Also, clicking the version at the top of the revised page allows you to jump to the next revised page.

| Ver. | Date | Description of Revision |
|---|---|---|
| 1.0 | 2011.06 | New |
| 1.1 | 2011.09 | Addition of South African model<br>Delete C1634 in DAMP board for Saudi Arabia model<br>Add R1736 in DAMP board for Saudi Arabia model<br>Change P/N of IC107 in DMB21 board<br>Change P/N of IC1601 in TUNER board<br>Change of AUDIO-IN, BUTTON, BUTTON LED, DISPLAY, MIC, USB, VOLUME and VOLUME LED boards (Suffix-13)<br>Change P/N of Q1301 in MIC board |
| 1.2 | 2012.02 | Add PROTECT KIND CHECK TEST MODE in page 12<br>Change P/N of R1447 and R1449 in DAMP board<br>Change P/N of Q205, Q800, Q804 and Q805 in MAIN board<br>Change P/N of Q906, Q907, D901, D903, D904 and D905 in DISPLAY board<br>Change P/N of Q1301 in MIC board<br>Add JR924 in DISPLAY board<br>Change of AUDIO-IN, BUTTON, BUTTON LED, DISPLAY, MIC, USB, VOLUME and VOLUME LED boards (Suffix-14)<br>Change of DMB21 board (Suffix-21)<br>Delete Q102 in DMB21 board<br>Add Q104 and Q105 in DMB21 board |
| | | |
| | | |
| | | |
| | | |
| | | |
| | | |
| | | |
| | | |
| | | |
| | | |
| | | |
| | | |
| | | |
| | | |
| | | |
| | | |
| | | |
| | | |
| | | |
| | | |
| | | |
| | | |
| | | |
| | | |
| | | |
| | | |
| | | |