HCD-GX750/RG551/RX550

SERVICE MANUAL

Ver 1.0 2004. 04

US Model
HCD-GX750/RX550
Canadian Model
HCD-GX750
E Model
HCD-RG551

(Photo: HCD-GX750)

- HCD-GX750/RG551/RX550 is the tuner, deck, CD and amplifier section in MHC-GX750/RG551S/RX550.

CD Section	Model Name Using Similar Mechanism	NEW
	CD Mechanism Type	CDM74-F1BD81
	Optical Pick-up Name	KSM-215DCP/C2NP
Tape Deck Section	Model Name Using Similar Machanism	NEW
	Tape Transport Mechanism Type	CWM43FF-05

SPECIFICATIONS

AUDIO POWER SPECIFICATIONS
(HCD-GX750 USA model only)
POWER OUTPUT AND TOTAL HARMONIC DISTORTION:
With 6 ohm loads, both channels driven, from 120 – 10,000 Hz; rated 160 watts per channel minimum RMS power, with no more than 10 % total harmonic distortion from 250 milliwatts to rated output.

Amplifier section

North American models:
HCD-GX750/RX550:
Front speaker
Continuous RMS power output (reference): 160 + 160 watts (6 ohms at 1 kHz, 10% THD)
Total harmonic distortion less than 0.07% (6 ohms at 1 kHz, 80 W)
Sub woofer
Continuous RMS power output (reference): 180 watts (6 ohms at 50 Hz, 10% THD)
Total harmonic distortion less than 0.07% (6 ohms at 50 Hz, 90 W)

Other models:
HCD-RG551:
The following measured at AC 120, 127, 220, 240 V, 50/60 Hz
Front speaker
DIN power output (rated): 100 + 100 watts (6 ohms at 1 kHz, DIN)
Continuous RMS power output (reference): 120 + 120 watts (6 ohms at 1 kHz, 10% THD)
Sub woofer
DIN power output (rated): 100 watts (6 ohms at 50 Hz, DIN)
Continuous RMS power output (reference): 120 watts (6 ohms at 50 Hz, 10% THD)

Inputs
GAME INPUT AUDIO L/R (phono jacks): voltage 250 mV, impedance 47 kilohms
GAME INPUT VIDEO (phono jack): 1 Vp-p, 75 ohms
Outputs
PHONES (stereo mini jack): accepts headphones of 8 ohms or more

– Continued on next page –

MINI HI-FI COMPONENT SYSTEM

9-877-777-01 **Sony Corporation**
2004D04-1 **Home Audio Company**
© 2004. 04
Published by Sony Engineering Corporation

SONY®

VIDEO OUT (phono jack):	max. output level 1 Vp-p, unbalanced, Sync negative, load impedance 75 ohms
SPEAKER:	accepts impedance of 6 to 16 ohms
SUB WOOFER OUT:	accepts impedance of 6 to 16 ohms

CD player section

System	Compact disc and digital audio system
Laser	Semiconductor laser (λ=770 – 810 nm) Emission duration: continuous
Frequency response	2 Hz – 20 kHz (±0.5 dB)
Signal-to-noise ratio	More than 90 dB
Dynamic range	More than 90 dB

Tape deck section

Recording system	4-track 2-channel, stereo
Frequency response	50 – 13,000 Hz (±3 dB), using Sony TYPE I cassettes

Tuner section

FM stereo, FM/AM superheterodyne tuner

FM tuner section

Tuning range	
North American model:	87.5 – 108.0 MHz (100 kHz step)
Other models:	87.5 – 108.0 MHz (50 kHz step)
Antenna	FM lead antenna
Antenna terminals	75 ohms unbalanced
Intermediate frequency	10.7 MHz

AM tuner section

Tuning range	
Pan-American models:	530 – 1,710 kHz (with the tuning interval set at 10 kHz) 531 – 1,710 kHz (with the tuning interval set at 9 kHz)
Other models:	530 – 1,710 kHz (with the tuning interval set at 10 kHz) 531 – 1,602 kHz (with the tuning interval set at 9 kHz)
Antenna	AM loop antenna
Antenna terminals	External antenna terminal
Intermediate frequency	450 kHz

General

Power requirements	
North American models:	120 V AC, 60 Hz
Argentine model:	220 V AC, 50/60 Hz
Mexican model:	127 V AC, 60 Hz
Other models:	120 V, 220 V or 230 – 240 V AC, 50/60 Hz Adjustable with voltage selector
Power consumption	
USA model:	
HCD-GX750/RX550:	230 watts
Canadian models:	
HCD-GX750:	280 VA
Other models:	
HCD-RG551:	275 watts
Dimensions (w/h/d) incl. projecting parts and controls	
Amplifier/Tuner/Tape/CD section:	Approx. 280 × 327 × 425 mm
Mass	
North American models:	
HCD-GX750/RX550:	Approx. 10.5 kg
Other models:	
HCD-RG551:	Approx. 10.5 kg

Design and specifications are subject to change without notice.

SAFETY CHECK-OUT

After correcting the original service problem, perform the following safety check before releasing the set to the customer:
Check the antenna terminals, metal trim, “metallized” knobs, screws, and all other exposed metal parts for AC leakage. Check leakage as described below.

LEAKAGE TEST

The AC leakage from any exposed metal part to earth ground and from all exposed metal parts to any exposed metal part having a return to chassis, must not exceed 0.5 mA (500 microamperes).
Leakage current can be measured by any one of three methods.

1. A commercial leakage tester, such as the Simpson 229 or RCA WT-540A. Follow the manufacturers’ instructions to use these instruments.

2. A battery-operated AC milliammeter. The Data Precision 245 digital multimeter is suitable for this job.

3. Measuring the voltage drop across a resistor by means of a VOM or battery-operated AC voltmeter. The “limit” indication is 0.75 V, so analog meters must have an accurate low-voltage scale. The Simpson 250 and Sanwa SH-63Trd are examples of a passive VOM that is suitable. Nearly all battery operated digital multimeters that have a 2V AC range are suitable. (See Fig. A)

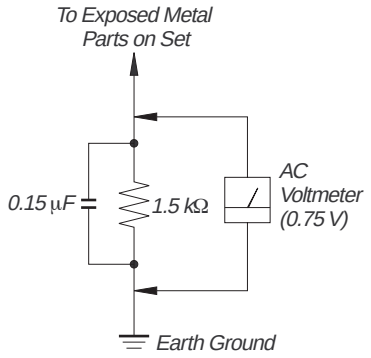

Fig. A. Using an AC voltmeter to check AC leakage.

SAFETY-RELATED COMPONENT WARNING!!

COMPONENTS IDENTIFIED BY MARK ⚠ OR DOTTED LINE WITH MARK ⚠ ON THE SCHEMATIC DIAGRAMS AND IN THE PARTS LIST ARE CRITICAL TO SAFE OPERATION. REPLACE THESE COMPONENTS WITH SONY PARTS WHOSE PART NUMBERS APPEAR AS SHOWN IN THIS MANUAL OR IN SUPPLEMENTS PUBLISHED BY SONY.

ATTENTION AU COMPOSANT AYANT RAPPORT À LA SÉCURITÉ!!

LES COMPOSANTS IDENTIFIÉS PAR UNE MARQUE ⚠ SUR LES DIAGRAMMES SCHÉMATIQUES ET LA LISTE DES PIÈCES SONT CRITIQUES POUR LA SÉCURITÉ DE FONCTIONNEMENT. NE REMPLACER CES COMPOSANTS QUE PAR DES PIÈCES SONY DONT LES NUMÉROS SONT DONNÉS DANS CE MANUEL OU DANS LES SUPPLÉMENTS PUBLIÉS PAR SONY.

The release method of a CD disc tray LOCK function

There is a disc lock function for the disc theft prevention for a demonstration at a shop front in this machine.
Procedue:
1. Press the I/⏻ button to turn the set on.
2. Press two buttons of ■ and ⏏ (EJECT) simultaneously for five seconds.
3. The message "LOCKED" is displayed and the tray is locked. (Even if exiting from this mode, the tray is still locked.)
4. Press two buttons of ■ and ⏏ (EJECT) simultaneously for five seconds again.
5. The message "UNLOCKED" is displayed and the tray is unlocked.
6. To exit from this mode, press the I/⏻ button to turn the set off.

Unleaded solder

Boards requiring use of unleaded solder are printed with the lead-free mark (LF) indicating the solder contains no lead.
(Caution: Some printed circuit boards may not come printed with the lead free mark due to their particular size.)

: LEAD FREE MARK

Unleaded solder has the following characteristics.
- Unleaded solder melts at a temperature about 40°C higher than ordinary solder.
  Ordinary soldering irons can be used but the iron tip has to be applied to the solder joint for a slightly longer time.
  Soldering irons using a temperature regulator should be set to about 350°C.
  Caution: The printed pattern (copper foil) may peel away if the heated tip is applied for too long, so be careful!
- Strong viscosity
  Unleaded solder is more viscous (sticky, less prone to flow) than ordinary solder so use caution not to let solder bridges occur such as on IC pins, etc.
- Usable with ordinary solder
  It is best to use only unleaded solder but unleaded solder may also be added to ordinary solder.

NOTES ON HANDLING THE OPTICAL PICK-UP BLOCK OR BASE UNIT

The laser diode in the optical pick-up block may suffer electrostatic breakdown because of the potential difference generated by the charged electrostatic load, etc. on clothing and the human body.
During repair, pay attention to electrostatic break-down and also use the procedure in the printed matter which is included in the repair parts.
The flexible board is easily damaged and should be handled with care.

NOTES ON LASER DIODE EMISSION CHECK

The laser beam on this model is concentrated so as to be focused on the disc reflective surface by the objective lens in the optical pick-up block. Therefore, when checking the laser diode emission, observe from more than 30 cm away from the objective lens.

Laser component in this product is capable of emitting radiation exceeding the limit for Class 1.

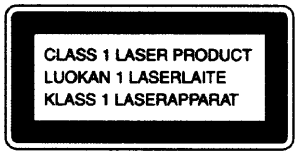

This appliance is classified as a CLASS 1 LASER product. This label is located on the rear exterior.

CAUTION

Use of controls or adjustments or performance of procedures other than those specified herein may result in hazardous radiation exposure.

Notes on Chip Component Replacement

- Never reuse a disconnected chip component.
- Notice that the minus side of a tantalum capacitor may be damaged by heat.

Flexible Circuit Board Repairing

- Keep the temperature of soldering iron around 270°C during repairing.
- Do not touch the soldering iron on the same conductor of the circuit board (within 3 times).
- Be careful not to apply force on the conductor when soldering or unsoldering.

TABLE OF CONTENTS

1. SERVICE NOTE
1-1. Service Position-1 (AMP Board) 6
1-2. Service Position-2 (BD81A Board) 6

2. GENERAL
Main Unit 7
Remote Control 8

3. DISASSEMBLY
3-1. Case (Top) 10
3-2. CD Door 10
3-3. Front Panel Section 11
3-4. CD Mechanism Deck 11
3-5. Tape Mechanism Deck, Game Jack Board 12
3-6. Panel Board 12
3-7. Back Panel Section, Sub Trans Board 13
3-8. Trans Board 13
3-9. Main Board 14
3-10. Sub Woofer Board 14
3-11. Amp Board 15
3-12. BD81A Board 15
3-13. Connect Board 16
3-14. Driver Board, SW Board 16
3-15. Optical Pick-up 17
3-16. Sensor Board 17
3-17. Motor (TB) Board 18
3-18. Motor (LD) Board 18

4. TEST MODE 19

5. DIAGRAMS
5-1. IC Pin Descriptions 22
5-2. Block Diagram –CD Section– 27
5-3. Block Diagram –Main Section– 28
5-4. Block Diagram –Panel/Power Section– 29
5-5. Block Diagram –Sub Woofer Section– 30
5-6. Circuit Boards Location 30
5-7. Note for Printed Wiring Boards and Schematic Diagrams 31
5-8. Waveforms 31
5-9. Printed Wiring Board –CD Mechanism Section (1/2)– 32
5-10. Schematic Diagram –CD Mechanism Section (1/2)– 33
5-11. Printed Wiring Boards –CD Mechanism Section (2/2)– 34
5-12. Schematic Diagram –CD Mechanism Section (2/2)– 35
5-13. Schematic Diagram –Main Section (1/2)– 36
5-14. Schematic Diagram –Main Section (2/2)– 37
5-15. Printed Wiring Board –Main Section– 38
5-16. Printed Wiring Boards –Panel Section– 39
5-17. Schematic Diagram –Panel Section (1/2)– 40
5-18. Schematic Diagram –Panel Section (2/2)– 41
5-19. Printed Wiring Boards –Jack Section– 42
5-20. Schematic Diagram –Jack Section– 43
5-21. Printed Wiring Board –Sub Woofer Section– 44
5-22. Schematic Diagram –Sub Woofer Section– 45
5-23. Printed Wiring Board –Power Amp Section (GX750/RX550)– 46
5-24. Printed Wiring Boards –Transformer Section (GX750/RX550)– 47
5-25. Schematic Diagram –Power Section (GX750/RX550)– 48
5-26. Printed Wiring Board –Power Amp Section (RG551)– 49
5-27. Printed Wiring Boards –Transformer Section (RG551)– 50
5-28. Schematic Diagram –Power Section (RG551)– 51
5-29. IC Block Diagrams 52

6. EXPLODED VIEWS
6-1. Main Section 54
6-2. Front Panel Section (1) 55
6-3. Front Panel Section (2) 56
6-4. Front Panel Section (3) 57
6-5. Main Board Section 58
6-6. CD Mechanism Section (1) 59
6-7. CD Mechanism Section (2) 60

7. ELECTRICAL PARTS LIST 61

SECTION 1
SERVICING NOTE

1-1. SERVICE POSITION-1 (AMP BOARD)

To inspect the AMP board, turn both of the front panel and the CD mechanism deck so that the left side of the product faces down.

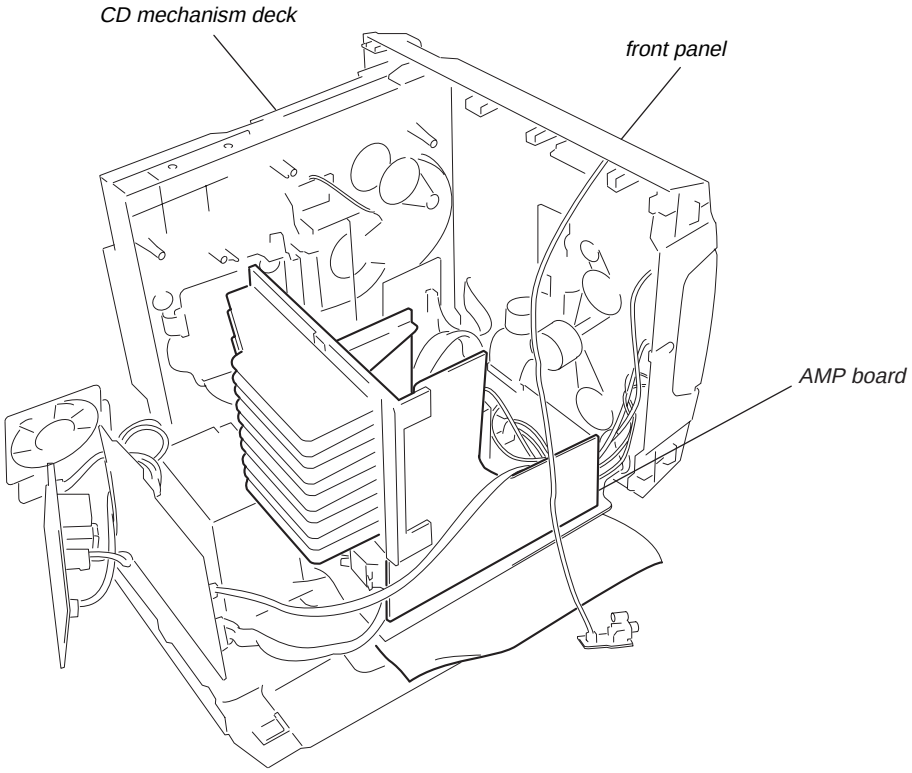

1-2. SERVICE POSITION-2 (BD81A BOARD)

Remove the CD mechanism deck and place it on top of the pedestal as shown.
Inspect the BD81A board in this set up.

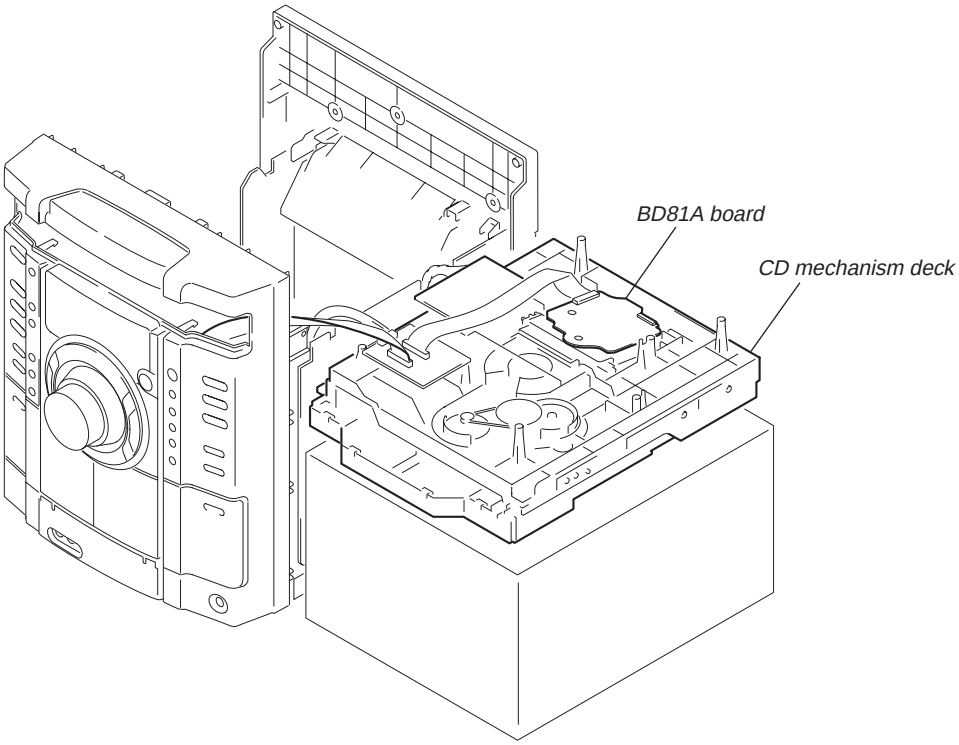

SECTION 2
GENERAL

This section is extracted from instruction manual.

List of button locations and reference pages

How to use this page

Use this page to find the location of buttons and other parts of the system that are mentioned in the text.

Illustration number

TAPE A/B 33 (18, 19, 20, 24)

Name of button/part — Reference page

Main unit

ALPHABETICAL ORDER

A - O

ALBUM +[1] 16 (12, 14, 19)
ALBUM –[1] 25 (12, 14, 19)
CD 35 (9, 11, 14, 19, 20)
CD SYNC 27 (19)
Deck A 28 (18)
Deck B 17 (18, 19, 20, 24)
DISC 1 – 3 10 (12, 14, 35)
DISC SKIP/EX-CHANGE 12 (11, 12, 14, 19)
Disc tray 9 (11)
DISPLAY 2 (17, 27, 28)
Display window 5
EFFECT ON/OFF 8 (22)
ENTER 11 (14, 15, 22)
EQ BAND 7 (22)
GAME 32 (20, 23, 30)
GAME INPUT AUDIO L/R jacks 23 (20, 29)
GAME INPUT VIDEO jack 24 (29)
GAME MIXING 26 (23)
GROOVE 8 (21)
ILLUMINATION[2] 3 (28)
MIC jack[3] 22 (24)
MIC LEVEL[3] 21 (24)
Operation Dial (– EQ +/⏮ ⏭) 6 (12, 14, 19, 22)

P - Z

P FILE 13 (22)
PHONES jack 19
PLAY MODE 29 (12, 14, 18, 19, 20, 35)
Power illuminator[2] 18 (28)
PRESET EQ 13 (22)
REC PAUSE/START 27 (19, 20, 23, 24)
Remote sensor 4
SURROUND 8 (23)
TAPE A/B 33 (18, 19, 20, 24)
TUNER/BAND 34 (15, 16, 20)
TUNING MODE 29 (15, 16, 35)
TUNING + 16 (15, 16)
TUNING – 25 (15, 16)
VIDEO/MD[3] 31 (20, 30)
VOLUME control 20 (21)
WIRELESS[4] 31 (32)

BUTTON DESCRIPTIONS

I/⏻ (power) 1 (8, 16, 27, 30, 33, 35)
❚❚ (pause) 25 (12, 19)
⏏ (eject) 14 (11)
PUSH ⏏ (deck B) (eject) 15 (18)
■ (stop) 25 (12, 19, 24, 35)
▶▶ (fast forward) 16 (12, 19)
▷ or ◁▷[3] (play) 16 (12, 18, 19)
◀◀ (rewind) 25 (12, 19)
⏏ PUSH (deck A) (eject) 30 (18)

1) MHC-GX750/GX450/RG555/RG551S/RG444S/RG441/RG333/RG222/RG221/RX550 only
2) MHC-GX750/GX450/RG555/RG551S/RG444S/RG441/RG333/RX550 only
3) MHC-RG555 only
4) MHC-GX750 only

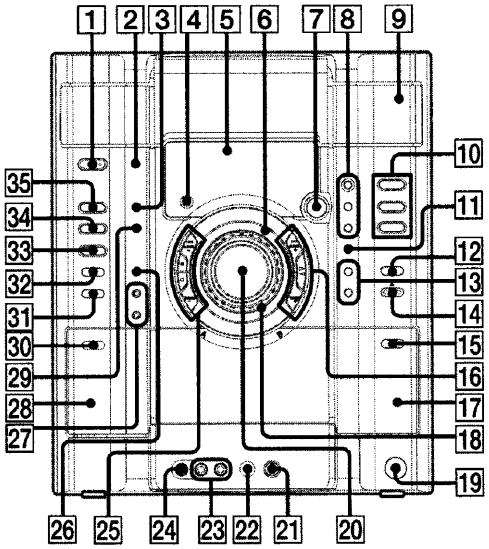

Remote control

ALPHABETICAL ORDER

A - E

ALBUM –* 13 (12, 14)
ALBUM +* 11 (12, 14)
CD 18 (11, 14)
CLEAR 15 (14)
CLOCK/TIMER SELECT 2 (26, 27)
CLOCK/TIMER SET 3 (10, 25, 26)
DISC SKIP 10 (12, 14)
DISPLAY 21 (17, 27, 28)
ENTER 9 (10, 14, 15, 25, 26)
EQ 14 (22)

F - Z

FM MODE 4 (17)
FUNCTION 6 (11, 14, 15, 16)
PLAY MODE 20 (12, 14, 18)
REPEAT 4 (13)
SLEEP 22 (25)
TAPE 17
TUNER BAND 5 (15, 16)
TUNER MEMORY 19 (15)
TUNING MODE 20 (15, 16)
VOLUME +/– 12 (21, 25)

BUTTON DESCRIPTIONS

I/⏻ (power) 1 (8, 26)
◀◀/▶▶ (rewind/fast forward) 7 (12, 19)
–/+ (tuning) 16 (15)
⏮/⏭ (go back/go forward) 16 (10, 12, 19)
▶ (play) 8 (12, 18)
❚❚ (pause) 8 (12, 19)
■ (stop) 8 (12, 19)

* MHC-GX750/GX450/RG555/RG551S/RG444S/RG441/RG333/RG222/RG221/RX550 only

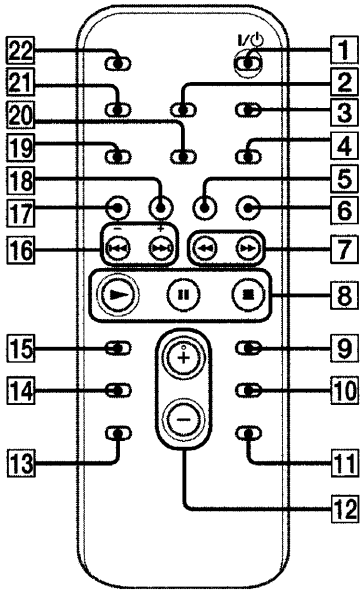

SECTION 3
DISASSEMBLY

Note : Disassemble the unit in the order as shown below.

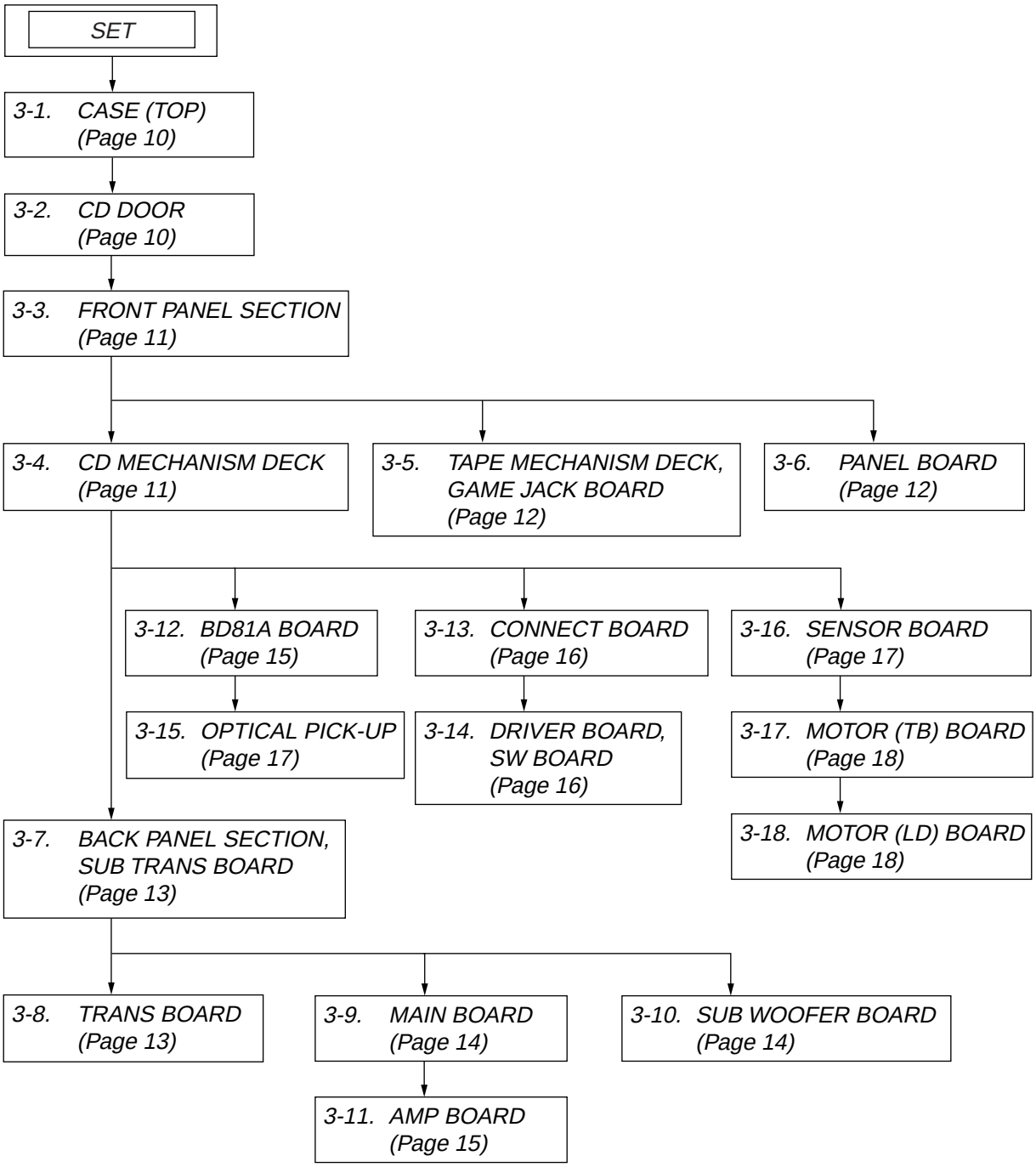

Note : Follow the disassembly procedure in the numerical order given.

3-1. CASE (TOP)

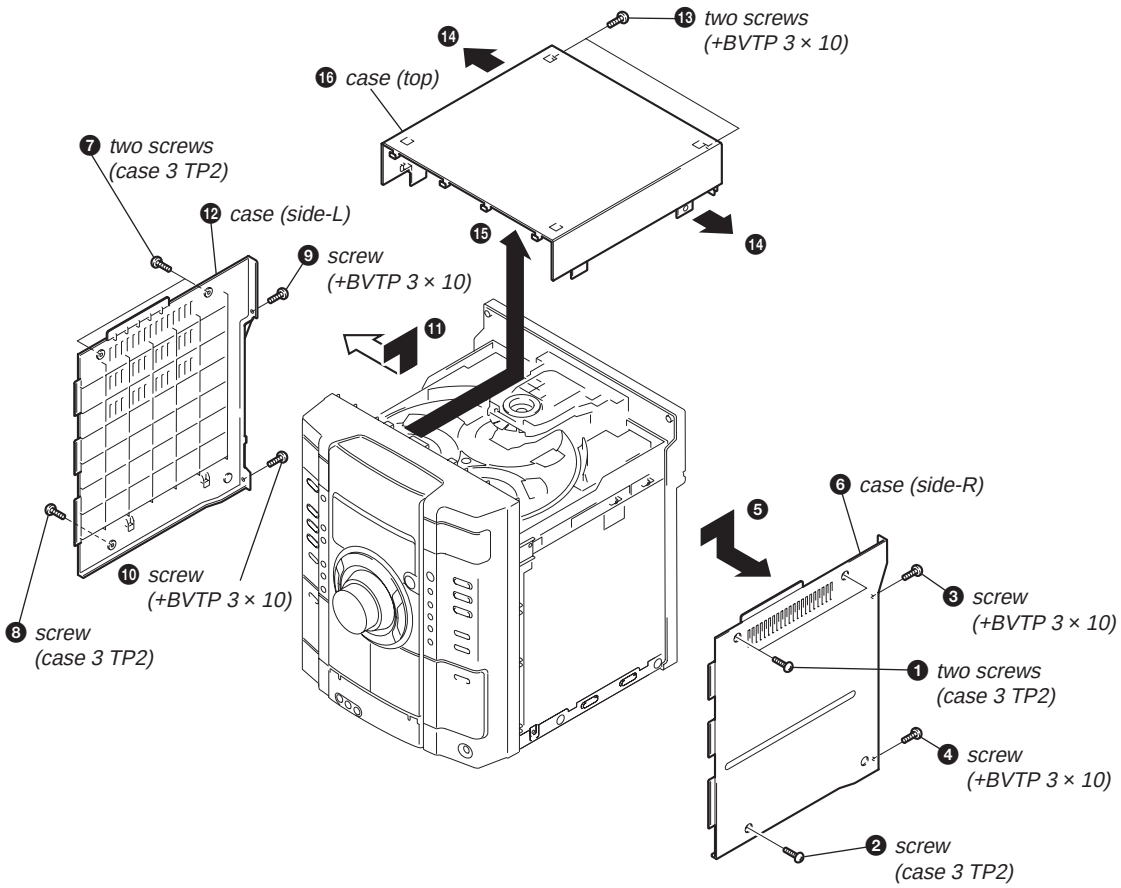

3-2. CD DOOR

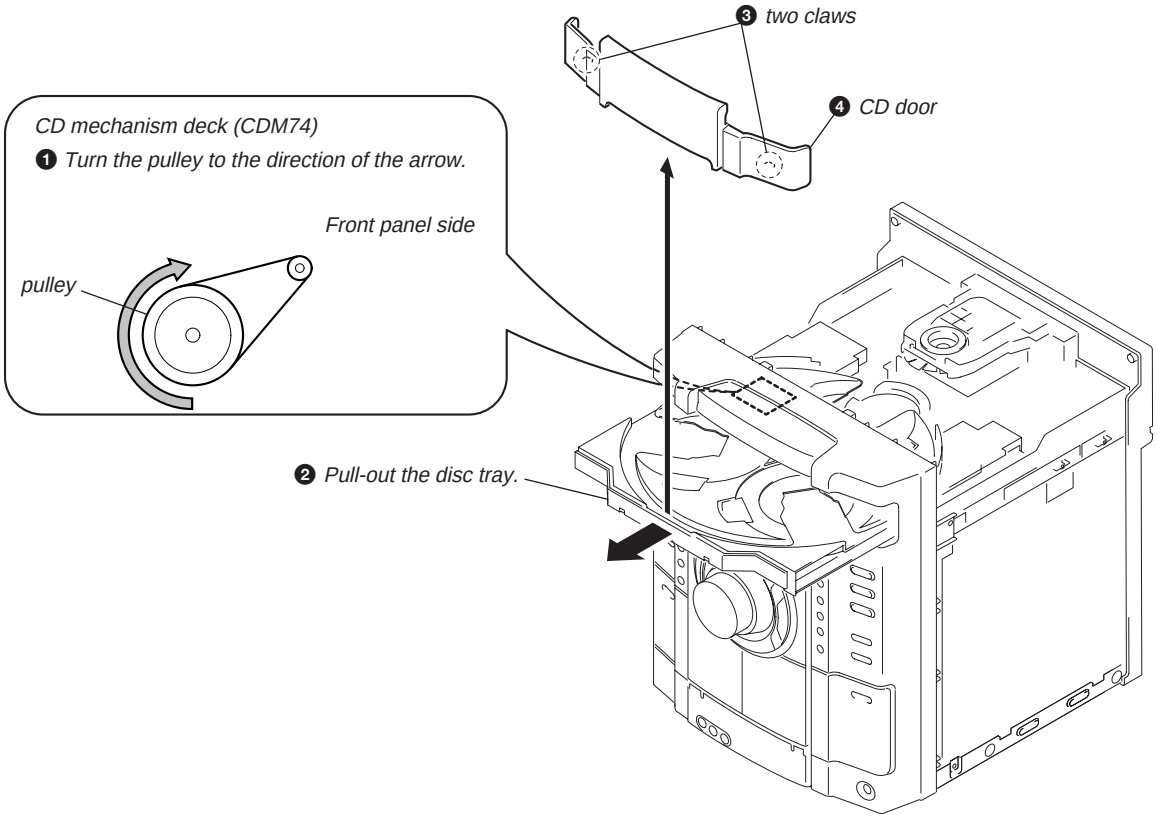

3-3. FRONT PANEL SECTION

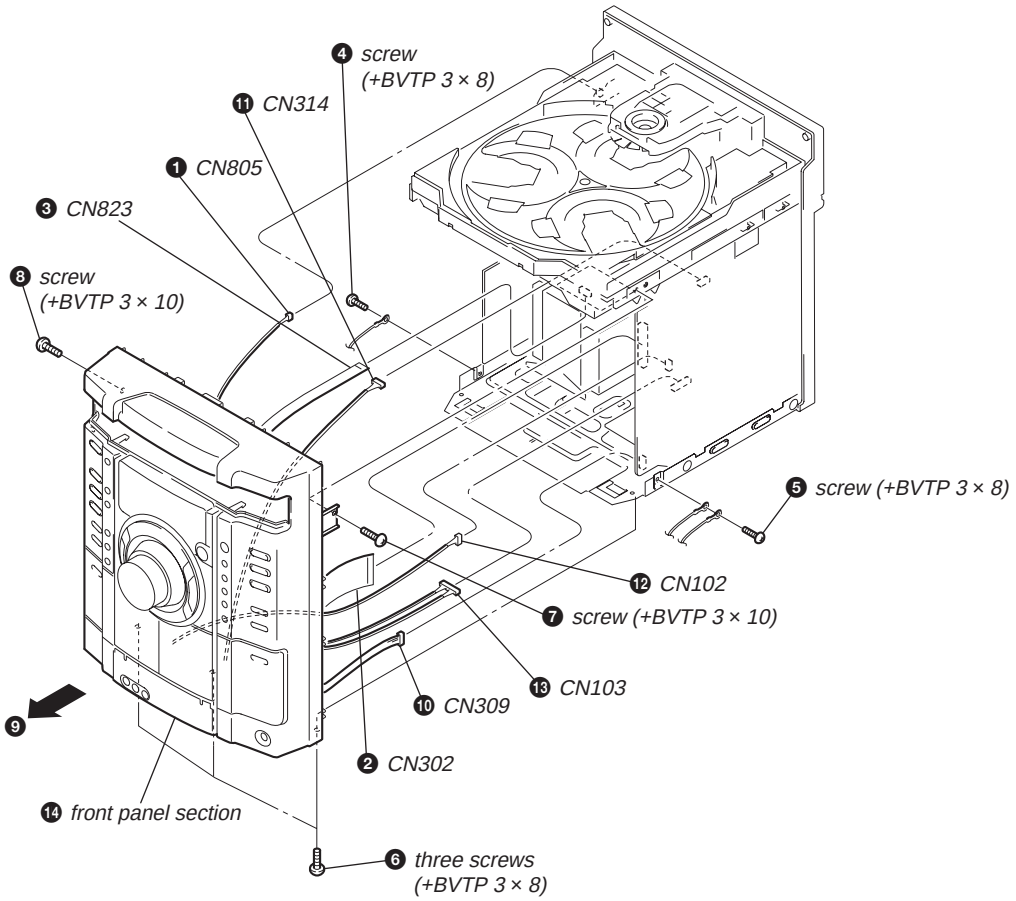

3-4. CD MECHANISM DECK

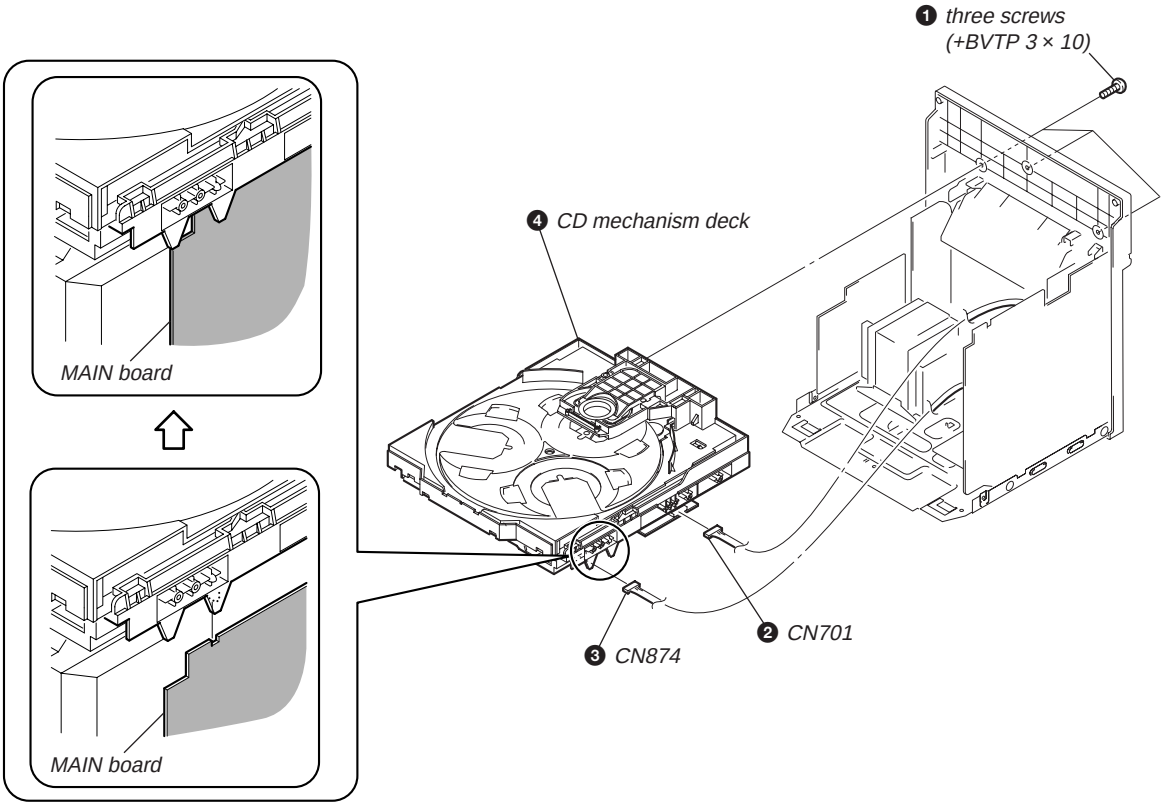

3-5. TAPE MECHANISM DECK, GAME JACK BOARD

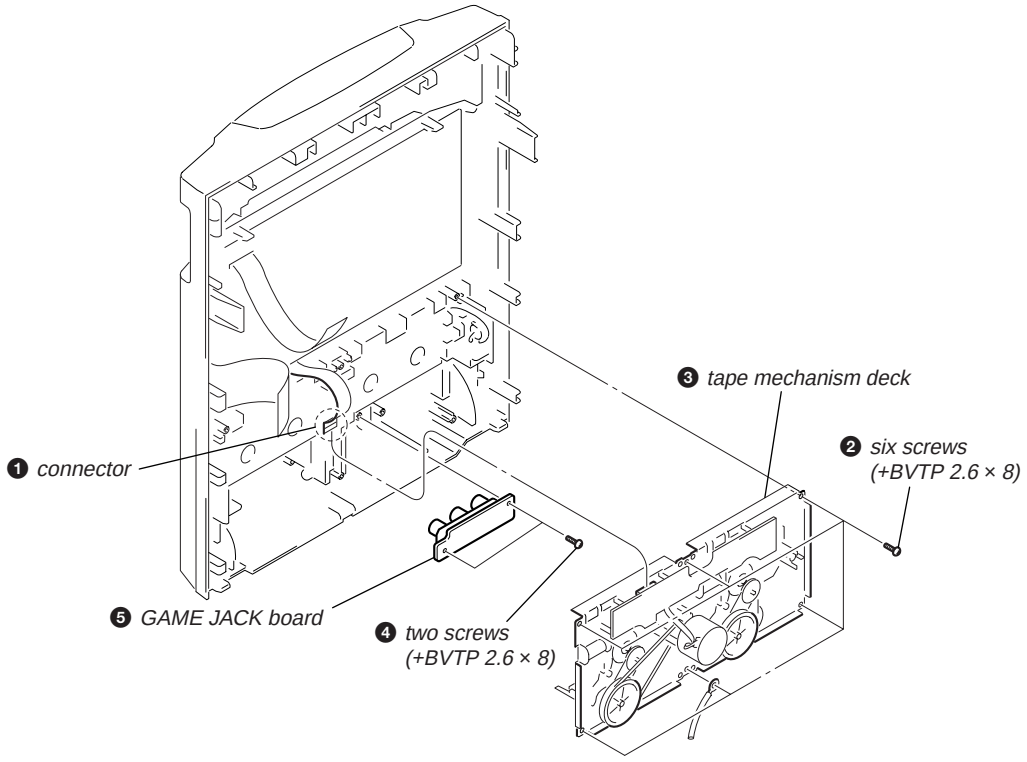

3-6. PANEL BOARD

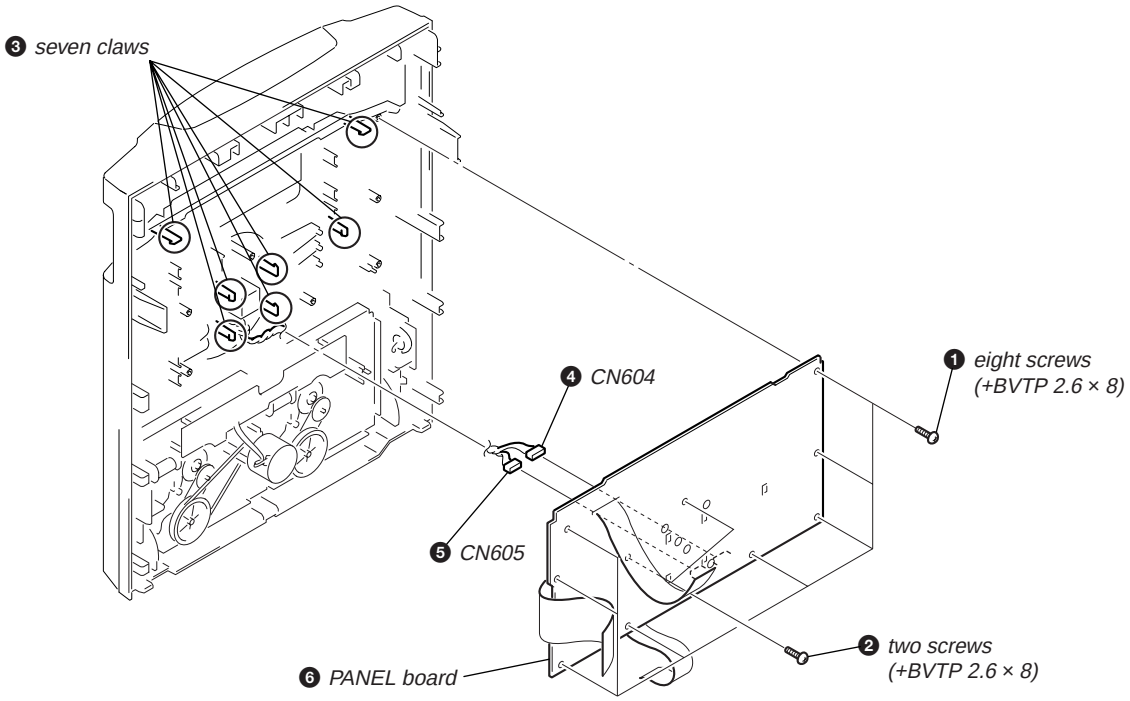

3-7. BACK PANEL SECTION, SUB TRANS BOARD

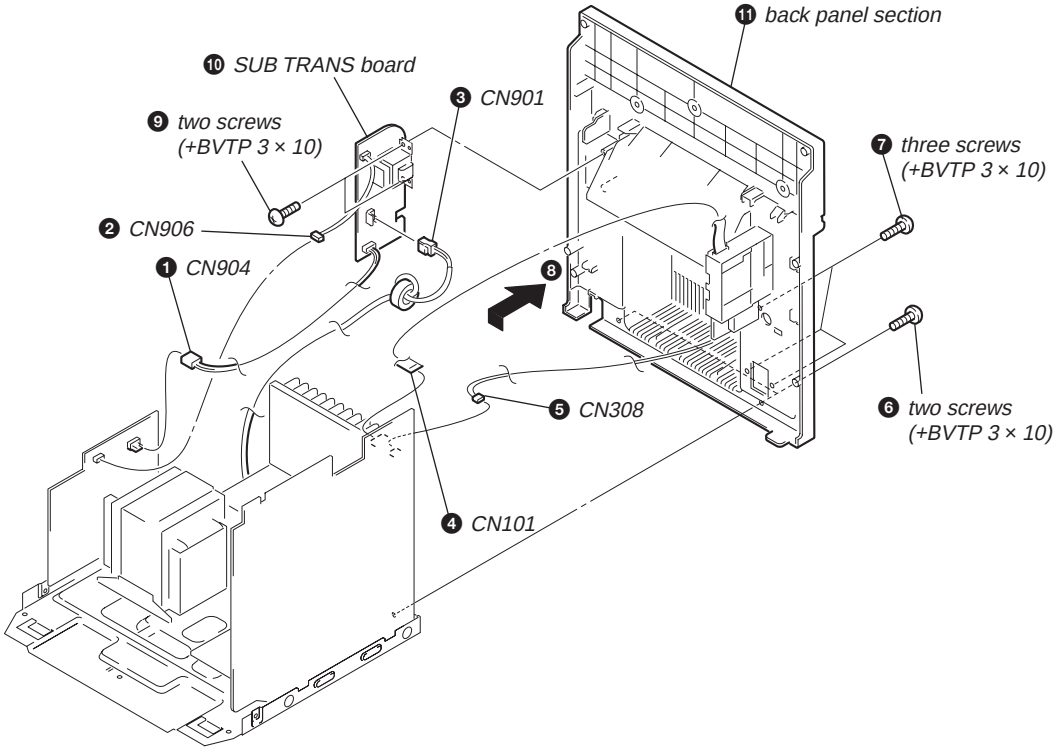

3-8. TRANS BOARD

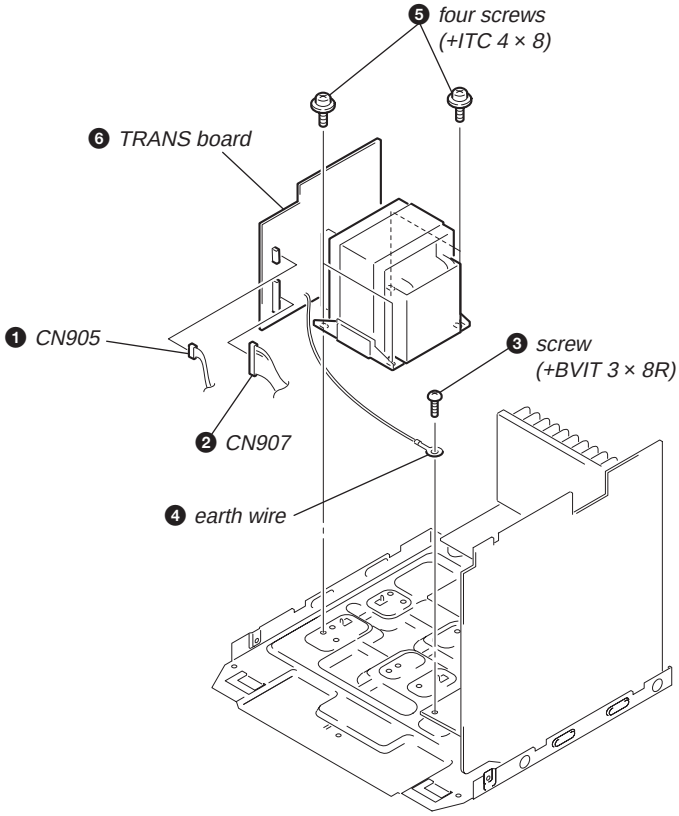

3-9. MAIN BOARD

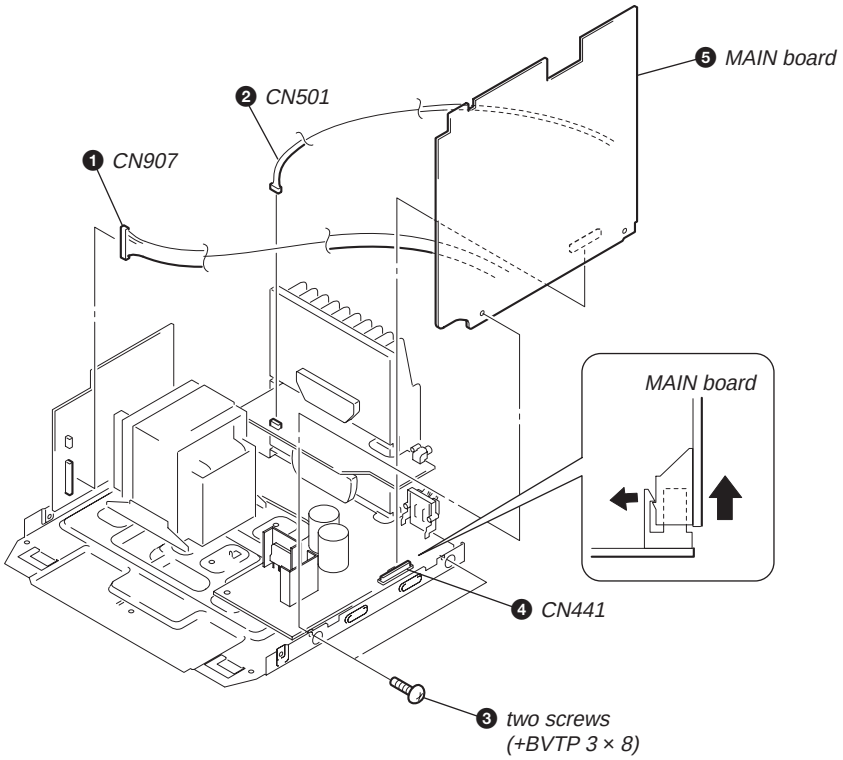

3-10. SUB WOOFER BOARD

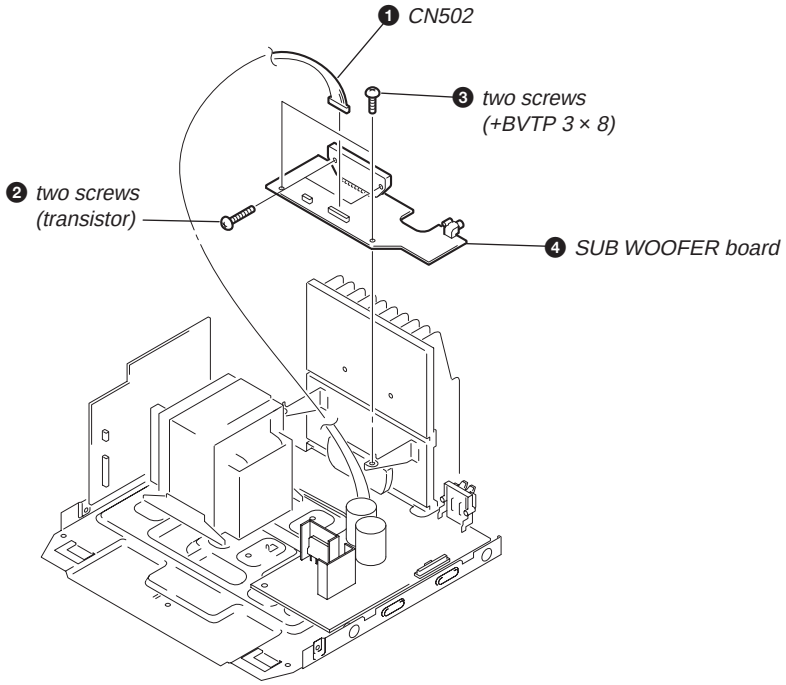

3-11. AMP BOARD

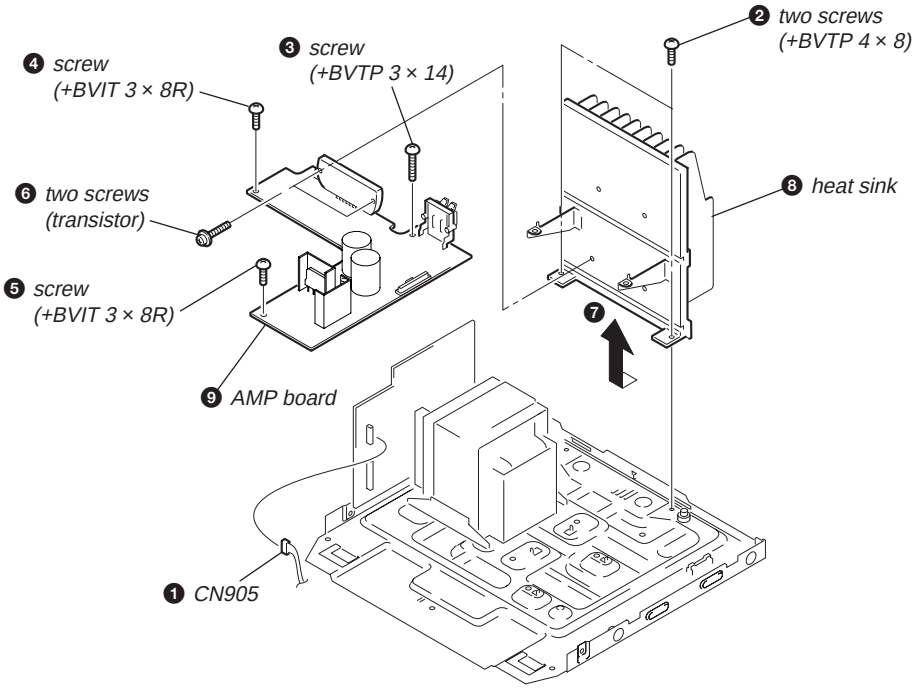

3-12. BD81A BOARD

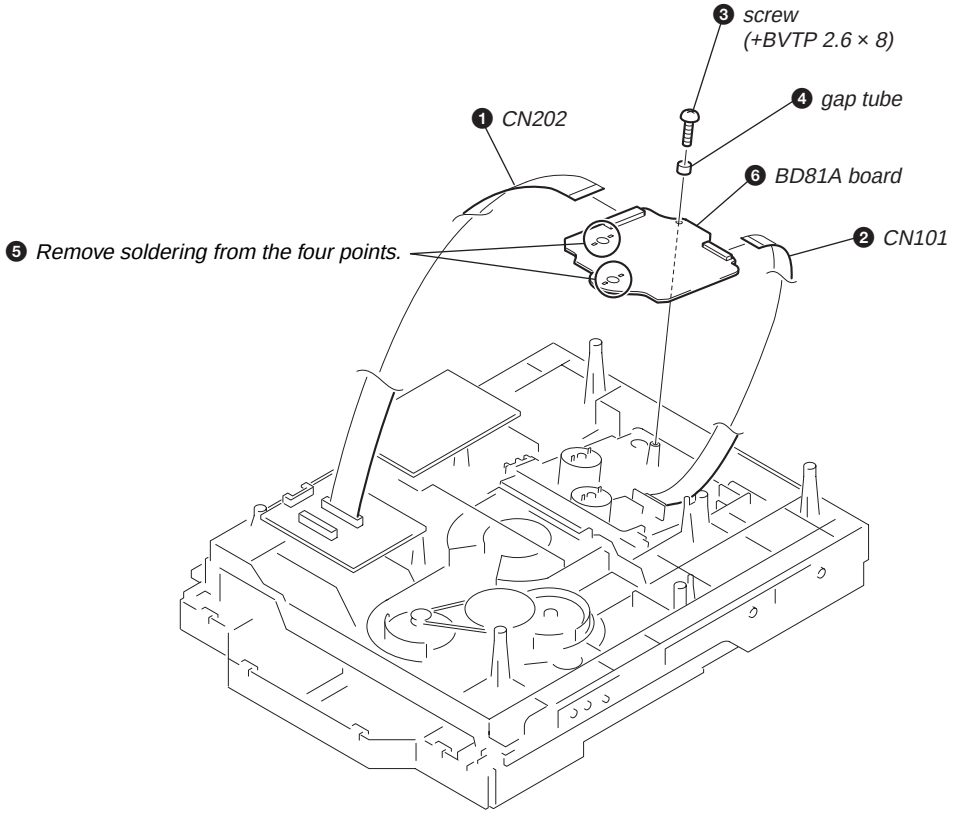

3-13. CONNECT BOARD

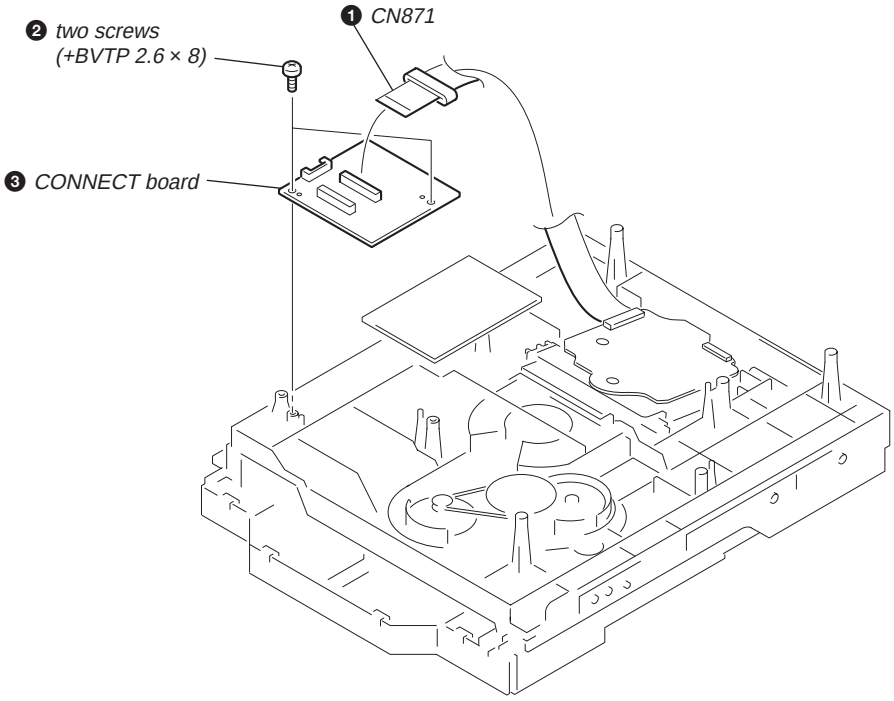

3-14. DRIVER BOARD, SW BOARD

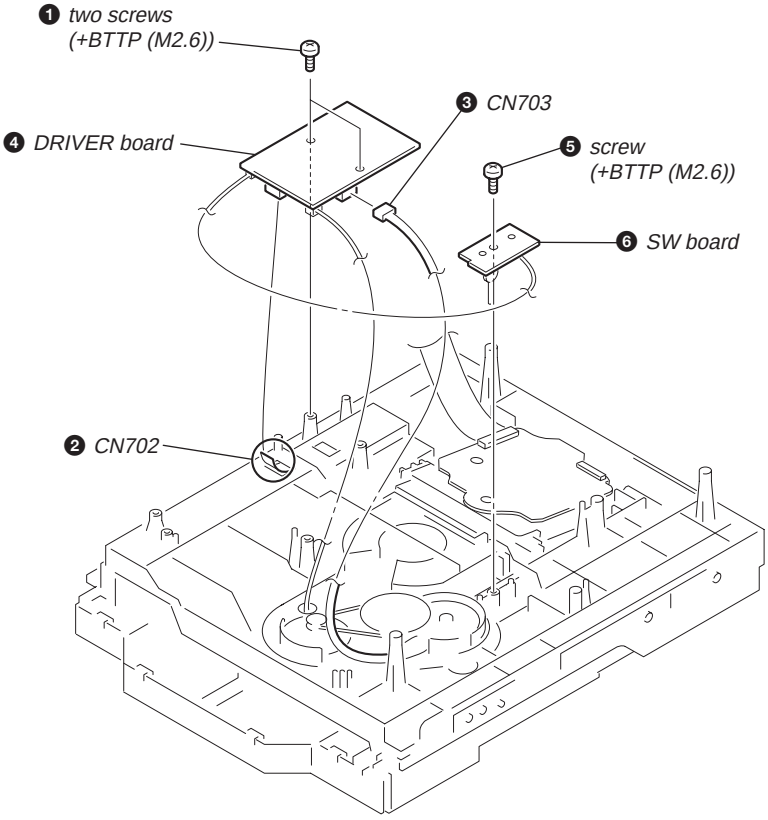

3-15. OPTICAL PICK-UP

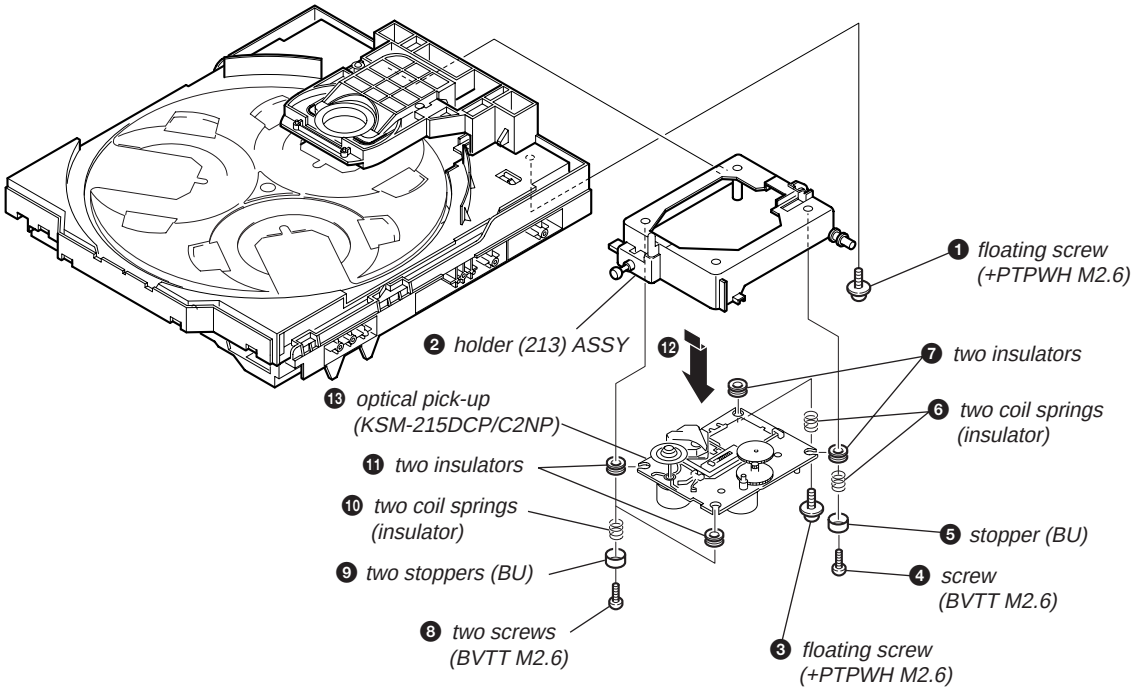

3-16. SENSOR BOARD

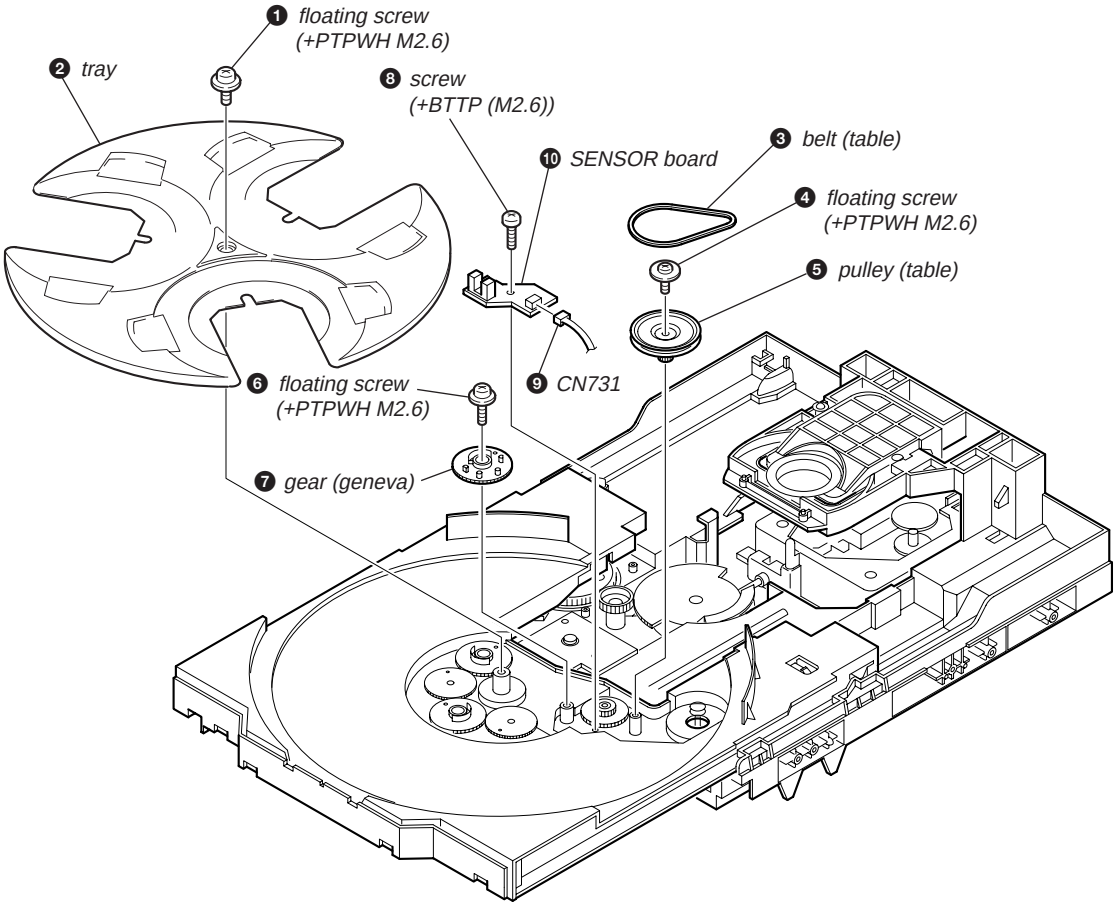

3-17. MOTOR (TB) BOARD

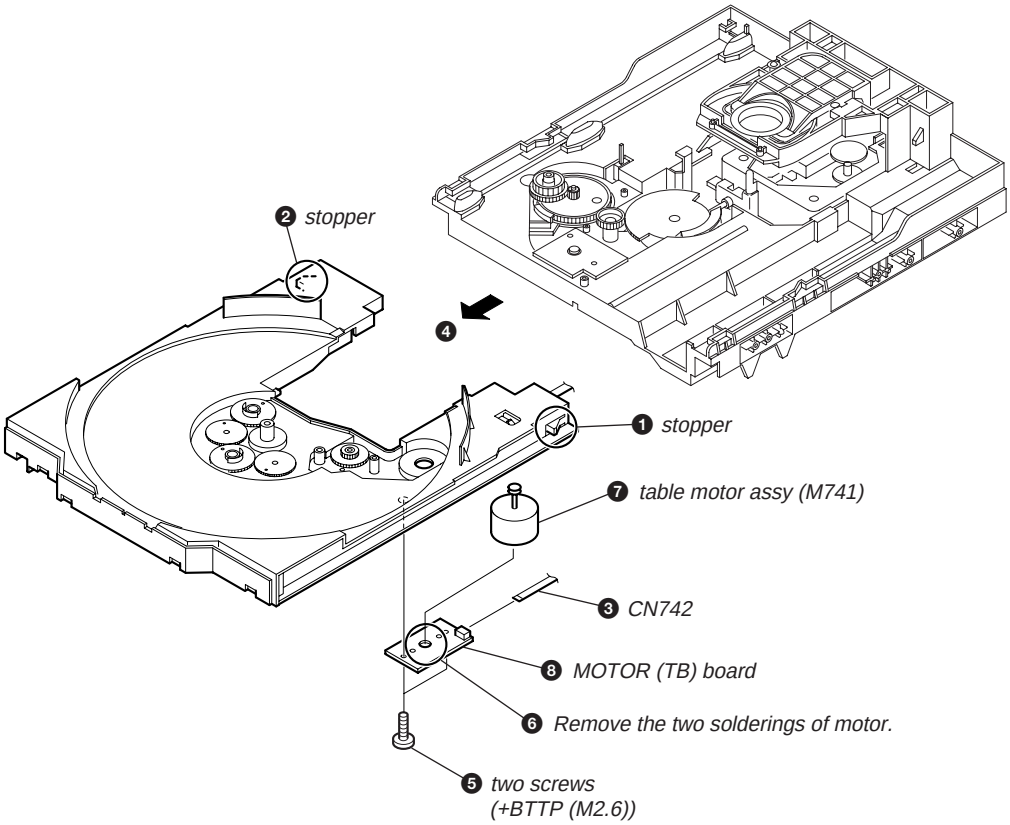

3-18. MOTOR (LD) BOARD

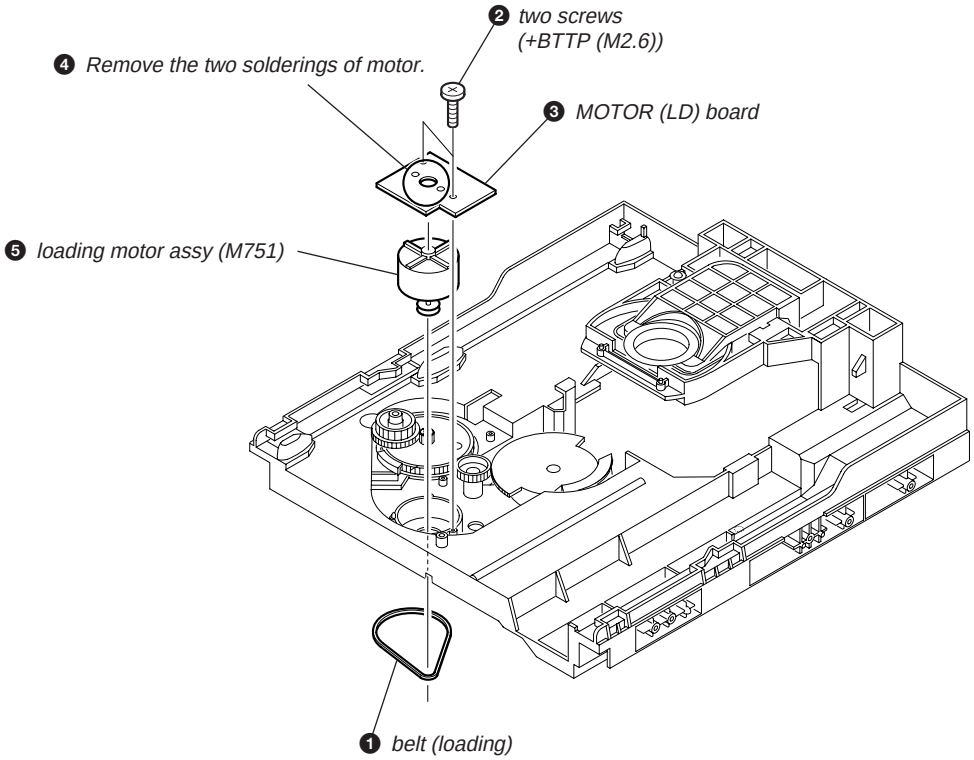

SECTION 4
TEST MODE

[Change-over of AM Tuner Step between 9 kHz and 10 kHz]

- A step of AM channels can be changed over between 9 kHz and 10 kHz.

Procedure:

1. Press I/⏻ button to turn the set ON.
2. Select the function "TUNER", and press TUNER/BAND button to select the BAND "AM".
3. Press I/⏻ button to turn the set OFF.
4. Press TUNER/BAND and I/⏻ buttons simultaneously, and the display of fluorescent indicator tube changes to "AM 9 k STEP" or "AM 10 k STEP", and thus the channel step is changed over.

[Cold Reset]

- The cold reset clears all data including preset data stored in the RAM to initial conditions. Execute this mode when returning the set to the customer.

Procedure:

1. Press three buttons ■ , PLAY MODE/TUNING MODE , and DISC 1 simultaneously.
2. The fluorescent indicator tube displays "COLD RESET" and the set is reset.

[Aging Mode]

This mode can be used for operation check of CD section and tape deck section.

- If an error occurred:
  The aging operation stops and is displayed status.
- If no error occurs:
  The aging operation continues repeatedly.

1. Operating method of Aging Mode

Turn on the main power and select "CD" of the function.

1) Set three discs in tray. Select ALL DISCS, and REPEAT OFF.
2) Load the tapes recording use into both decks.
3) Press three buttons ■ , PLAY MODE/TUNING MODE , and EX-CHANGE simultaneously.
4) Aging operations of CD and tape are started at the same time.
5) To exit the aging mode, perform [Cold Reset].

2. Aging mode in CD section

1) Operation during aging mode

- In the agining mode, the program is excuted in the following sequence.

(1) The disc tray opens and closes.
(2) The disc tray turns to select a disc 3.
(3) The pick-up accesses to the first track, and plays 3 seconds.
(4) The pick-up accesses to the last track, and plays 3 seconds.
(5) The disc tray opens and closes.
(6) The disc tray turns to select a disc 1.
(7) The same operation starts like step (3).
(8) After a disc 1 aging operation, a disc 2 is selected.
(9) When an aging operation of a disc 3 is completed, the display "AGING ∗∗∗∗" value increases.
(10) If no error occurs, the aging operation continues repeatedly.

2) Error display

Disc error	
Display	Error
E00D01022	Focus error (No disc)
E00D02022	Sub Q error (Focus is good)
E00D02023	TOC reading error
E00D02014	Access error (Unable within regular time)

Mechanism error	
Display	Error
E00M__E_0	Error during opening tray
E00M__C_2	EX-CHANGE disc error
E00M__D_0	Error during closing tray
E00M__F_3	EX-OPEN error
E00M__D_5	EX-CLOSE error
E00M__C_2	Chuck-up error
E00M__C_3	Unchucking error

3. Aging mode in Tape Deck section

1) Operation during aging mode

- In the agining mode, the program is excuted in the following sequence.

Step	Operation	Display	
1	Rewind the TAPE A	TAPE	AAG-1
2	Rewind the TAPE B	TAPE	BAG-2
3	Play the TAPE A (1 minute)	TAPE	AAG-2
4	Stop the TAPE A (1 second)	TAPE	AAG-3
5	Play the TAPE A (3 minutes)	TAPE	AAG-4
6	Rewind(AMS) the TAPE A	TAPE	AAG-5
7	F.F.(AMS) the TAPE A	TAPE	AAG-6
8	Play the TAPE B (1 minute)	TAPE	BAG-2
9	Stop the TAPE B (1 second)	TAPE	BAG-3
10	Record the TAPE B (3 minutes)	TAPE	BAG-4
11	Rewind(AMS) the TAPE B	TAPE	BAG-5
12	F.F.(AMS) the TAPE B	TAPE	BAG-6

2) Error display

- If error occurred, the display remains like "TAPE BAG-2".

4. Exiting from the aging mode

- Be sure to perform Cold Reset to exit from the aging mode.

[PANEL Test Mode]
- All fluorecent segments and LEDs are tested.
- Keyboard check.

Procedure:
1. Press I/⏻ button to turn the set ON.
2. To enter the test mode, press the three buttons ■, PLAY MODE/TUNING MODE and ENTER simultaneously.
3. All segments and LEDs (without STANDBY LED) are turned on.
4. Press ❚❚ and ENTER buttons simultaneously, and the key check mode is activated.
5. The message “KEY 0 0 0 ” is displayed.
   Each time a button is pressed, the key code number is displayed.
6. Press ❚❚ and ENTER buttons simultaneously, and the key count mode is activated.
7. The message “KEYCNT 0” is displayed.
   Each time a button is pressed, “KEYCNT 0” value increased. However, once a button is pressed, it is no longer taken into account.
8. Press ❚❚ and ENTER buttons simultaneously, and the head phone detect mode is activated.
9. The message “H_P OFF” is displayed when a headphone jack is not inserted.
   “H_P ON ” is displayed when a headphone jack is inserted.
10. Press ❚❚ and ENTER buttons simultaneously, and the volume control detect mode is activated.
11. The message “VOLUME FLAT” is displayed.
    “VOLUME UP” is displayed if rotating MASTER VOLUME knob clockwise, or “VOLUME DOWN” is displayed if rotating counterclockwise.
12. To exit from the GC test mode after the head phone detect mode, press ❚❚ and ENTER buttons simultaneously.

[Version and Destination Display Mode]
- The version or destination is displayed.

Procedure:
1. Press I/⏻ button to turn the set ON.
2. To enter the test mode, press the three buttons ■, PLAY MODE/TUNING MODE and DISC 2 simultaneously.
3. The destination is displayed.
4. Press DISPLAY buttons simultaneously.
5. The version is displayed.
6. To exit from this mode, press I/⏻ button to turn the set OFF.

[CD Service Mode]
- This mode can run the CD sled motor freely. Use this mode, for instance, when cleaning the pick-up.

Procedure:
1. Press I/⏻ button to turn the set ON.
2. Select the function “CD”.
3. To enter the test mode, press three buttons ■, PLAY MODE/TUNING MODE, and ⏏ simultaneously.
4. The CD service mode is selected.
5. With the CD in stop status, press ▶▶ button to move the pick-up to outside track, or press ◀◀ button to inside track.
6. To exit from this mode, perform as follows:
   1) Move the pick-up to the most inside track.
   2) Press I/⏻ button to turn the set OFF.

Note:
- Always move the pick-up to most inside track when exiting from this mode. Otherwise, a disc will not be unloaded.
- Do not run the sled motor excessively, otherwise the gear can be chipped.

[MC Test Mode]
- This mode is used to test the function of the equalizer.

Procedure:
1. Press I/⏻ button to turn the set ON.
2. To enter the test mode, press the three buttons ■, PLAY MODE/TUNING MODE and DISC 3 simultaneously.
3. Press the EQ + button.
   The function of the equalizer is set to “MIN”.
4. Press the EQ – button.
   The function of the equalizer is set to “MAX”.
5. Press the PRESET EQ button.
   The function of the equalizer is set to “EQ FLAT”.
6. MASTER VOLUME up and down.
   “VOLUME MIN” “VOLUME 16” “VOLUME MAX” is displayed.
7. Press the GROOVE button.
   The message “VACS OFF” or “VACS ON” is displayed.
8. To exit from this mode, press I/⏻ button to turn the set OFF.

[CD Ship Mode (LOCK)]
- This mode moves the pick-up to the position durable to vibration. Use this mode when returning the set to the customer after repair.

Procedure:
1. Press I/⏻ button to turn the set ON.
2. Select the function “CD”.
3. Press I/⏻ button to turn the set OFF.
4. Press CD button and I/⏻ button simultaneously.
5. The “STANDBY” display blinks instantaneously, and the CD ship mode is set.

[CD Ship (LOCK) & COLD RESET MODE]
Procedure:
1. Press I/⏻ button to turn the set ON.
2. Select the function “CD”.
3. Press I/⏻ button to turn the set OFF.
4. Press three buttons ■ , CD and DISPLAY simultaneously.
5. The “STANDBY” display blinks instantaneously and CD ship mode is set.
6. To fluorescent indicator tube displays “COLD RESET” and the set is reset.

[Disc Tray Lock]
Procedure:
1. Press the I/⏻ button to turn the set ON.
2. Press two buttons of ■ and ⏏ simultaneously for five seconds.
3. The message “LOCKED” is displayed and the tray is locked. (Even if exiting from this mode, the tray is still locked.)
4. Press two buttons of ■ and ⏏ simultaneously for five seconds again.
5. The message “UNLOCKED” is displayed and the tray is unlocked.
6. To exit from this mode, press the I/⏻ button to turn the set OFF.

[CD Repeat 5 Times Limit Release Mode]

Procedure:

1. Press [I/⏻] button to turn the set ON.
2. Select the function "CD".
3. Press three buttons [■], [CD] and [ENTER] simultaneously.
4. The message "LIMIT OFF" is displayed.
5. Press [I/⏻] button the set OFF.

[AMP TEST MODE]

Procedure:

1. Press [I/⏻] button to turn the set ON.
2. To enter the test mode, press three buttons [■], [PLAY MODE/TUNING MODE] and [ENTER] simultaneously.
3. Press the [DISPLAY] button.
   The message "V0 0 0" " 000" is displayed.
4. Press the [GROOVE] button.
   The message "DBFB ON" "DBFB OFF" is displayed.
5. Press the [SURROUND] button.
   The message "SURROUND ON" "SURROUND OFF" is displayed.
6. Press the [EQ BAND] button.
   The message "LOW" "MID" "HIGH" is displayed.
7. Press [I/⏻] button to turn the set OFF.

SECTION 5
DIAGRAMS

5-1. IC PIN DESCRIPTIONS

• IC101 CXD3059AR (RF AMP) (BD81A BOARD)

Pin No.	Pin Name	I/O	Pin Description
1	MIRR	I/O	Mirror signal input/output Not used in this set. (Open)
2	DFCT	I/O	Defect signal input/output Not used in this set. (Open)
3	FOK	I/O	Focus OK signal input/output Not used in this set. (Open)
4	VSS	—	Internal digital ground pin
5	LOCK	I/O	GFS is sampled at 460Hz; when GFS is high , this pin outputs a high signal If GFS is low eight consecutive
6	MDP	O	Spindle motor servo control signal output
7	SSTP	I	Disc innermost detection signal input
8	IOVSS1	—	I/O digital ground pin
9	SFDR	O	Sled drive signal output
10	SRDR	O	Sled drive signal output
11	TFDR	O	Tracking drive signal output
12	TRDR	O	Tracking drive signal output
13	FFDR	O	Focus drive signal output
14	FRDR	O	Focus drive signal output
15	IOVDD1	—	I/O digital power supply pin (+3.3 V)
16	AVDD0	—	Analog power supply pin (+3.3 V)
17	AVSS0	—	Analog ground pin
18	NC	—	Not used. (Open)
19	E	I	E signal input
20	F	I	F signal input
21	TEI	I	Tracking error signal input
22	TEO	O	Tracking error signal output
23	FEI	I	Focus error signal input
24	FEO	O	Focus error signal output
25	VC	O	Center voltage output
26	A	I	A signal input
27	B	I	B signal input
28	C	I	C signal input
29	D	I	D signal input
30	NC	—	Not used. (Open)
31	AVDD4	—	Analog power supply pin (+3.3 V)
32	RFDCO	O	RFDC signal output Not used in this set. (Open)
33	PDSENS	I	Reference voltage pin for PD Connect to ground in this set.
34	AC_SUM	O	RFAC summing amplifier signal output
35	EQ_IN	I	Equalizer circuit signal input
36	LD	O	APC amplifier signal output
37	PD	I	APC amplifier signal input
38	NC	—	Not used. (Open)
39	RFC	I	Equalizer cut-off frequency adjustment pin
40	AVSS4	—	Analog ground pin
41	RFACO	O	RFAC signal output
42	RFACI	I	RFAC signal input or EFM signal input
43	AVDD3	—	Analog power supply pin (+3.3 V)
44	BIAS	I	Asymmetry circuit constant current signal input
45	ASYI	I	Asymmetry comparator voltage signal input
46	ASYO	O	EFM full-swing signal output (Low=VSS, High=VDD)
47	VPCO	O	Wide-band EFM PLL charge pump signal output Not used in this set. (Open)
48	VCTL	I	Wide-band EFM PLL VCO2 control voltage signal input
49	AVSS3	—	Analog ground pin
50	CLTV	I	Multiplier VCO1 control voltage signal input

Pin No.	Pin Name	I/O	Pin Description
51	FILO	O	Master PLL (slave=digital PLL) filter signal output
52	FILI	I	Master PLL filter signal input
53	PCO	O	Master PLL charge pump signal output
54	AVDD5	—	Analog power supply pin (+3.3 V)
55	DDVROUT	O	DC/DC converter signal output
56	DDVRSEN	I	DC/DC converter output voltage monitor pin
57	AVSS5	—	Analog ground pin
58	DDCR	I	DC/DC converter reset pin
59	NC	—	Not used. (Open)
60	BCKI	I	D/A interface bit clock signal input
61	PCMDI	I	D/A interface serial data signal input (2's COMP, MSB first)
62	LRCKI	I	D/A interface LR clock signal input
63	LRCK	O	D/A interface LR clock signal output f=Fs
64	VSS	—	Internal digital ground pin
65	PCMD	O	D/A interface serial data signal output (2's COMP, MSB first)
66	BCK	O	D/A interface bit clock signal output
67	VDD	—	Internal digital power supply pin (+3.3 V)
68	EMPH	O	High when the playback disc has emphasis, low it has not
69	EMPHI	I	High when de-emphasis is ON, low when input OFF
70	IOVDD2	—	I/O digital power supply pin (+3.3 V)
71	DOUT	O	Digital signal output
72	TEST	I	Test pin Normally ground
73	TES1	I	Test pin Normally ground
74	IOVSS2	—	I/O digital ground pin
75	NC	—	Not used. (Open)
76	XVSS	—	Master clock ground pin
77	XTAO	O	Crystal oscillation circuit signal output (16.9 MHz)
78	XTAI	I	Crystal oscillation circuit signal input (16.9 MHz)
79	XVDD	—	Master clock power supply pin (+3.3 V)
80	AVDD1	—	Analog power supply pin (+3.3 V)
81	AOUT1	O	Lch analog signal output
82	VREFL	O	Lch reference voltage signal output
83	AVSS1	—	Analog ground pin
84	AVSS2	—	Analog ground pin
85	VREFR	O	Rch reference voltage signal output
86	AOUT2	O	Rch analog signal output
87	AVDD2	—	Analog power supply pin (+3.3 V)
88	NC	—	Not used. (Open)
89	IOVDD0	—	I/O digital power supply pin (+3.3 V)
90	RMUT	O	Rch "0" detection flag Not used in this set. (Open)
91	LMUT	O	Lch "0" detection flag Not used in this set. (Open)
92	NC	—	Not used. (Open)
93	XTSL	I	Crystal selection input Not used in this set. (Connect to ground.)
94	IOVSS0	—	I/O digital ground pin
95	XTACN	I	Oscillation circuit control signal input Self-oscillation when high, oscillation stop when low
96	SQSO	O	Subcode Q 80-bit and PCM peak and level data signal output CD TEXT data signal output Not used in this set. (Open)
97	SQCK	I	SQSO readout clock signal input
98	SBSO	O	Subcode P to W serial signal output Not used in this set. (Open)
99	EXCK	I	SBSO readout clock signal input Not used in this set. (Open)
100	XRST	I	System reset signal input "L": Reset
101	SYSM	I	Mute signal input "H": Mute Connect to ground in this set.

Pin No.	Pin Name	I/O	Pin Description
102	DATA	I	Serial data signal input
103	VSS	—	Internal digital ground pin
104	XLAT	I	Latch signal input The serial data is latched at the falling edge
105	CLOCK	I	Serial data transfer clock signal input
106	VDD	—	Internal digital power supply pin (+3.3 V)
107	SENS	O	SENS signal output
108	SCLK	I	SENS serial data readout clock signal input
109	ATSK	I/O	Anti-shock signal input/output Not used in this set. (Open)
110	WFCK	O	WFCK signal output Not used in this set. (Open)
111	XUGF	O	XUGF signal output Not used in this set. (Open)
112	XPCK	O	XPCK signal output Not used in this set. (Open)
113	GFS	O	GFS signal output Not used in this set. (Open)
114	C2PO	O	C2PO signal output Not used in this set. (Open)
115	SCOR	O	High output when the subcode sync, S0 or S1, is detected
116	VDD	—	Internal digital power supply pin (+3.3 V)
117	C4M	O	4.2336MHz signal output Not used in this set. (Open)
118	WDCK	O	Word clock signal output f=2Fs Not used in this set. (Open)
119	COUT	I/O	Track number count signal input/output Not used in this set. (Open)
120	NC	—	Not used. (Open)

• IC601 LC876996A-53H2-E (SYSTEM CONTROLLER) (PANEL BOARD)

Pin No.	Pin Name	I/O	Pin Description
1	O-MP3 CS	O	CS signal output to CD digital processor
2	O-MP3 LP MOTER	O	LP signal output to CD digital processor and motor signal output
3	I-MP3 ACK SOL-B	I	ACK signal input from CD digital processor and motor signal input
4	O-MP3 REQ SOL-A	O	REQ signal output to CD digital processor and motor signal output
5	I-SCOR	I	CD scor signal input
6	$\overline{\text{O-MP3 RESET}}$	O	RESET signal output to CD digital processor
7	I-BU1924 DATA	I	Data signal input Connect to ground in this set.
8	I-BU1924 CLK	I	Clock signal input
9	I-VOLUME-IN1	I	Volume signal input from the encoder
10	I-VOLUME-IN2	I	Volume signal input from the encoder
11	$\overline{\text{RESET}}$	I	Reset signal input
12	I-XT1	I	Connection for input a crystal resonator (32.768 kHz)
13	I-XT2	O	Connection for input a crystal resonator (32.768 kHz)
14	VSS1	—	Ground pin
15	CF1	I	Connection for input a ceramic resonator (10 MHz)
16	CF2	O	Connection for input a ceramic resonator (10 MHz)
17	VDD1	—	Power supply pin (+1.5 V)
18	$\overline{\text{I-PROTECT}}$	I	Power amplifier circuit protection signal input
19	WFR/HP/MIC-IN	I	SubWoofer or Headphone detection signal input
20	I-CD ENCODER	I	Signal input from the CD encoder
21	I-CD OPEN/CLOSE	I	CD tray open switch signal input
22	I-TAPE A START	I	TAPE A switches signal input
23	I-TAPE B START	I	TAPE B switches signal input
24	I-STREAM/VACS	I	Stream/Vacs signal input
25	I-KEY 3	I	Function key input 3
26	I-KEY 2	I	Function key input 2
27	I-KEY 1	I	Function key input 1
28	$\overline{\text{I-SIRDS-IN}}$	I	Data signal input from the remote contorol receiver
29	I-AC CUT	I	Power down signal input
30 to 42	G13 to G1	O	FL tube grid signal output
43 to 45	S1 to S3	O	FL tube segment signal output
46	VDD3	—	Power supply pin (+3.3 V)
47 to 49	S4 to S6	O	FL tube segment signal output
50	S7/METER-SW1	O	FL tube segment signal output
51	–VPP	—	Power supply (–) pin (–26 V)
52	S8/METER-SW2	O	FL tube segment signal output
53	S9/METER-SW3	O	FL tube segment signal output
54 to 63	S10/SW1 to S19/SW10	O	FL tube segment signal output
64, 65	S20, S21	O	FL tube segment signal output
66	I-SPEC/MODEL/METER	I	METER swich signal input
67	I-TUNED-IN	I	Tuning frequency signal input
68	I-STEREO-IN	I	Stereo tuning signal input
69	I-AMS-IN	I	AMS signal input
70	I-REEL-A-IN	I	A deck photo sensor signal input
71	I-REEL-B-IN	I	B deck photo sensor signal input
72	VDD4	—	Power supply pin (+3.3 V)
73	I-CD NUM SENSOR	I	Table address sensor swich signal input
74	O-POWER-RELAY	O	POWER RELAY control signal output
75	O-SYSTEM-MUTE	O	System muting signal output
76	O-POWER-LED	O	POWER LED control signal output
77	STREAM-LED6/SOL B	O	Illumination LED control signal output
78	STREAM-LED5/SOL A	O	Illumination LED control signal output

Pin No.	Pin Name	I/O	Pin Description
79	STREAM-LED4/MOTOR	O	Illumination LED control signal output
80	STREAM-LED3/MP3-STB	O	Illumination LED control signal output
81	STREAM-LED2	O	Illumination LED control signal output
82	STREAM-LED1	O	Illumination LED control signal output
83	I-LC72121 DI	I	Data signal input from tuner
84	O-LC72121 CE	O	Chip select signal output to tuner
85	O-LC72121/BU2099FV DO	O	Data signal input from tuner and SP driver
86	O-LC72121/BU2099FV CLK	O	Clock signal output to tuner and SP driver
87	O-BU2099FV LCH	O	LCH signal output to SP driver
88	O-BD3401 CLK	O	Clock signal output to sound processor
89	VSS2	—	Ground pin
90	VDD2	—	Power supply pin (+3.5 V)
91	O-BD3401 DATA	O	Data signal output to sound processor
92	O-XTCN	O	CD XTCN signal output
93	O-XRES (RESET)	O	CD reset signal output
94	O-XLT (CD-LAT)	O	CD latch signal output
95	O-CD-DATA	O	CD data signal output
96	I-SENS	I	CD SENS signal input
97	O-CD-CLK	O	CD clock signal output
98	O-MP3-DO	O	MP3 data signal output to CD digital processor
99	I-MP3-DI	I	MP3 data signal input from CD digital processor
100	O-MP3-CLK	O	MP3 clock signal output to CD digital processor

5-2. BLOCK DIAGRAM — CD SECTION —

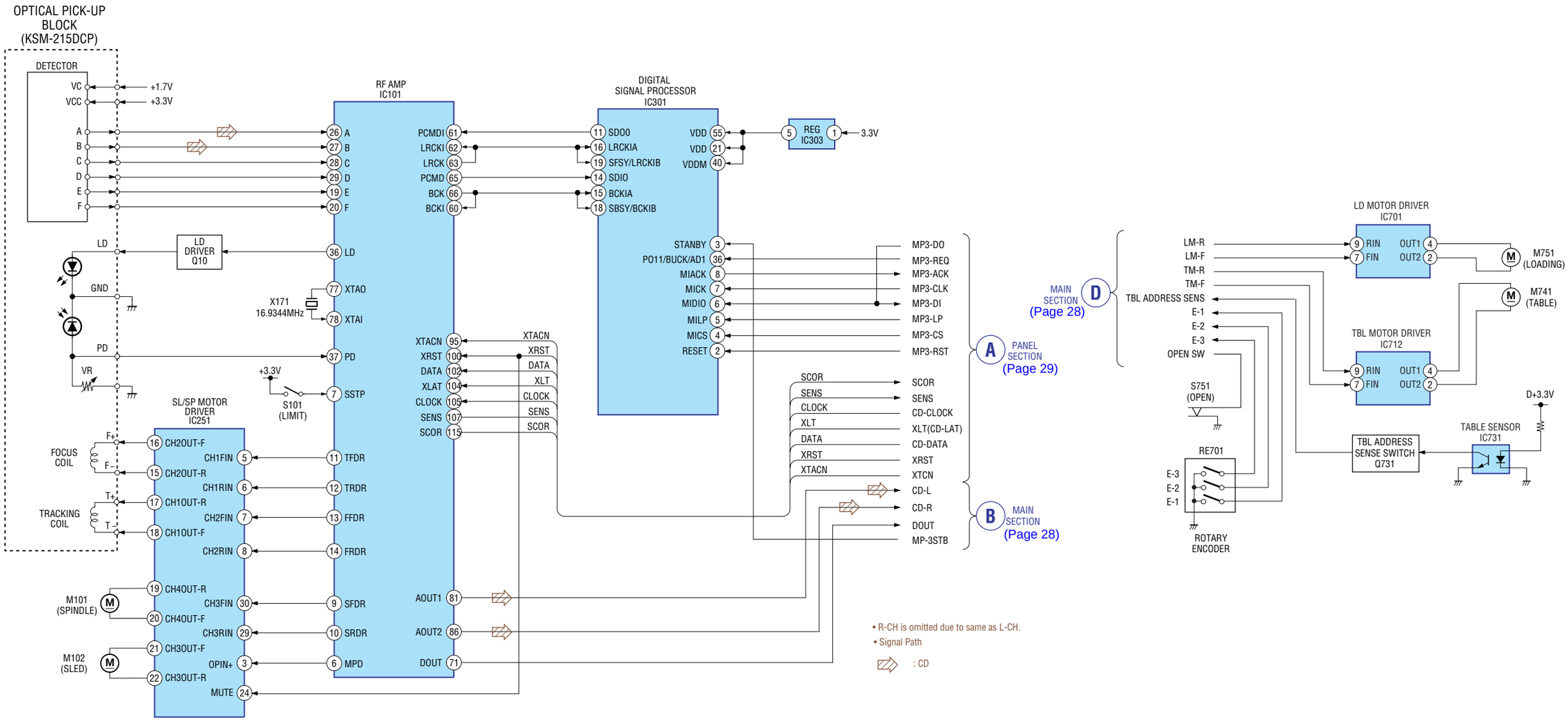

5-3. BLOCK DIAGRAM — MAIN SECTION —

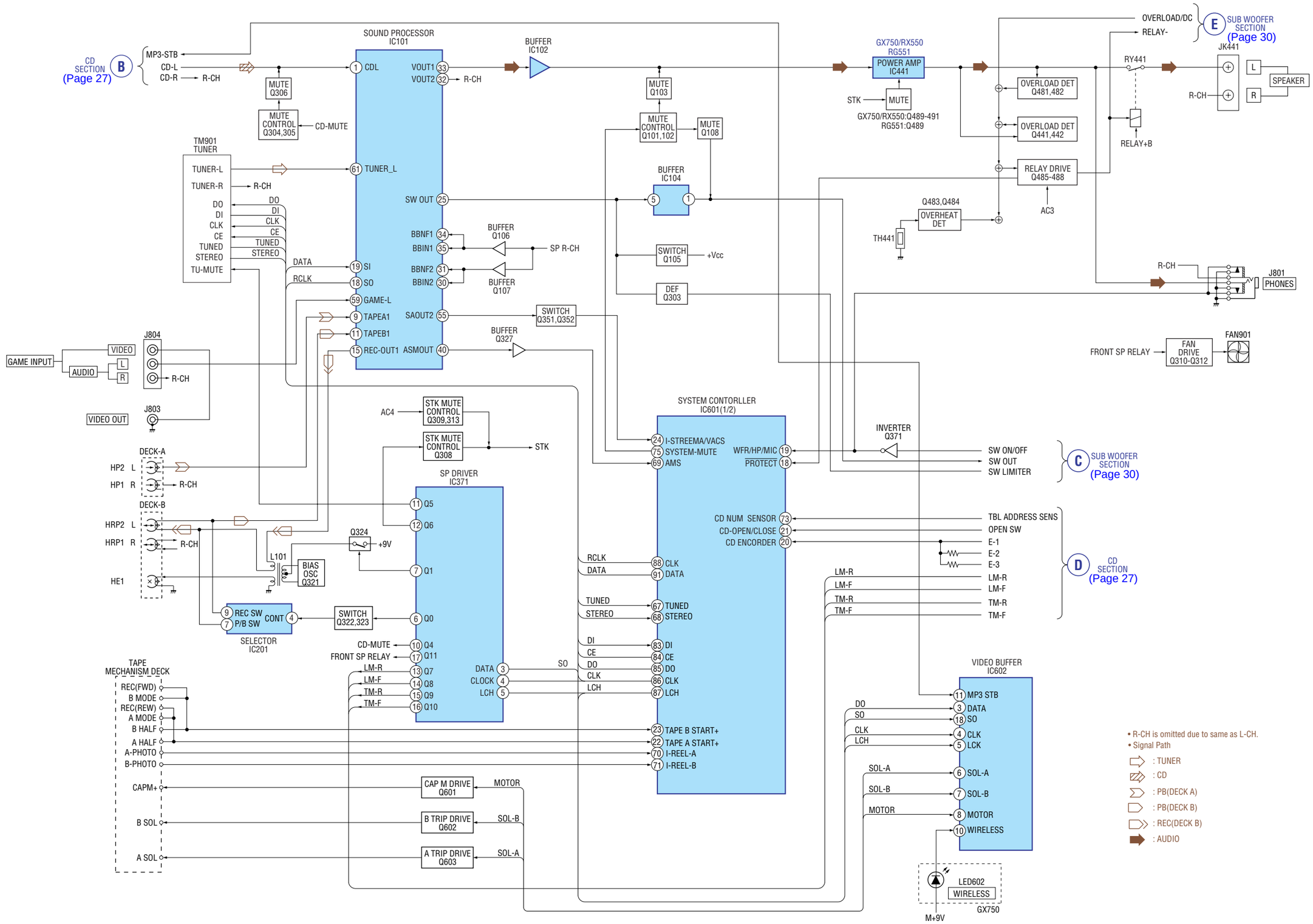

5-4. BLOCK DIAGRAM — PANEL/POWER SECTION —

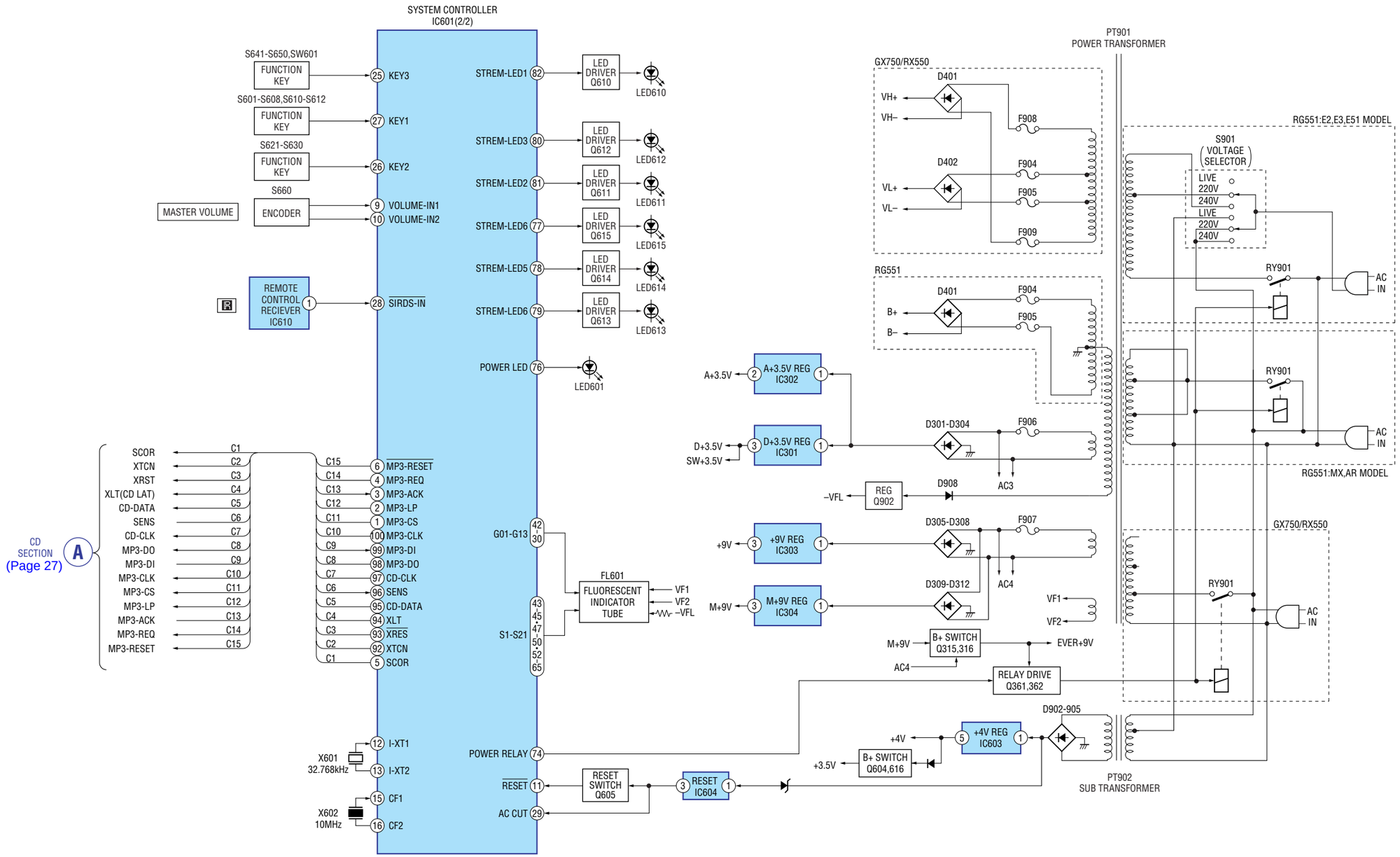

5-5. BLOCK DIAGRAM — SUB WOOFER SECTION —

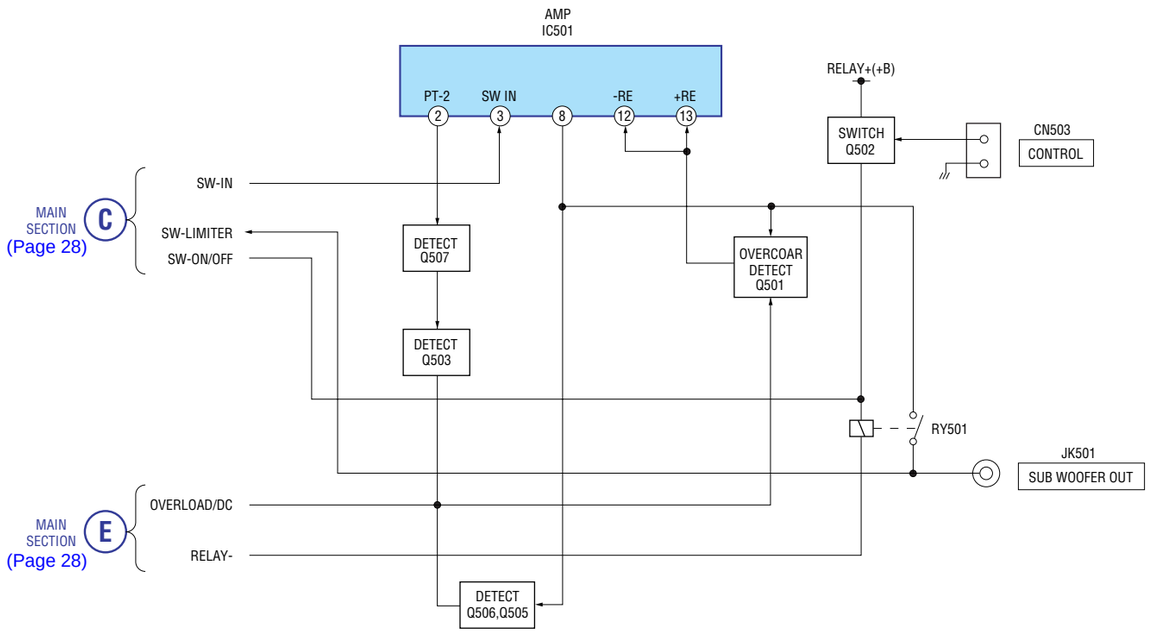

5-6. CIRCUIT BOARDS LOCATION

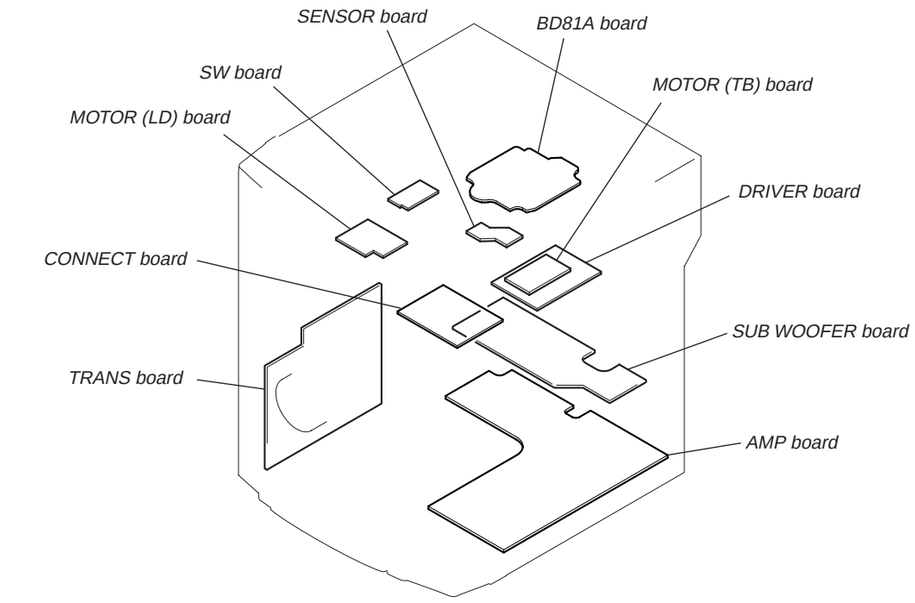

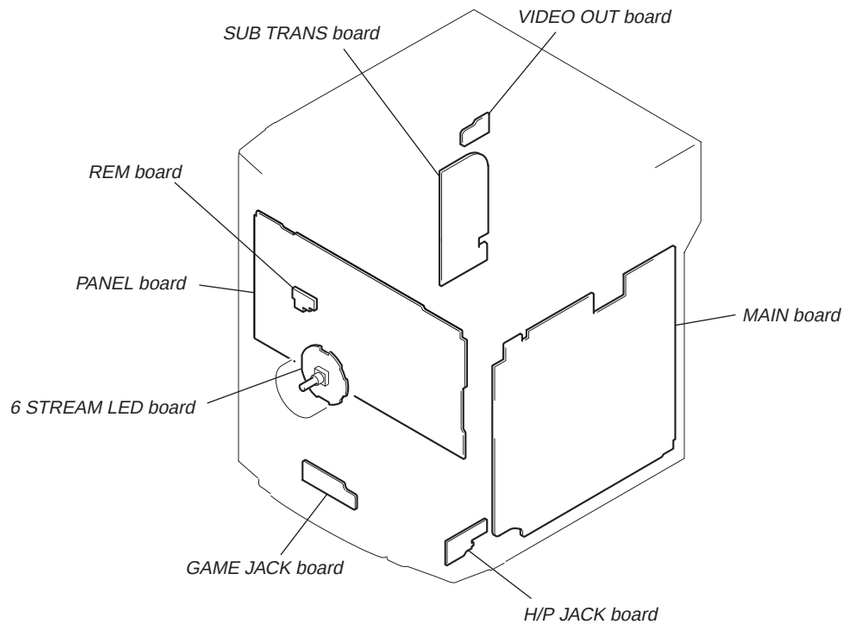

30

5-7. NOTE FOR PRINTED WIRING BOARDS AND SCHEMATIC DIAGRAMS

Note on Printed Wiring Board:

- ○——— : parts extracted from the component side.
- ——— : parts extracted from the conductor side.
- ▬ : Pattern from the side which enables seeing.
  (The other layer's patterns are not indicated.)

Caution:	
Pattern face side: (Conductor Side)	Parts on the pattern face side seen from the pattern face are indicated.
Parts face side: (Component Side)	Parts on the parts face side seen from the parts face are indicated.

- Indication of transistor.

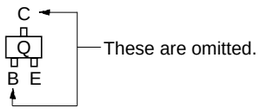

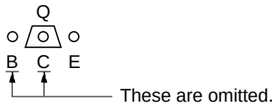

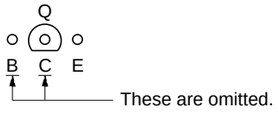

UNLEADED SOLDER

Boards requiring use of unleaded solder are printed with the lead free mark (LF) indicating the solder contains no lead.
(Caution: Some printed circuit boards may not come printed with the lead free mark due to their particular size)

: LEAD FREE MARK

Unleaded solder has the following characteristics.

- Unleaded solder melts at a temperature about 40 °C higher than ordinary solder.
  Ordinary soldering irons can be used but the iron tip has to be applied to the solder joint for a slightly longer time.
  Soldering irons using a temperature regulator should be set to about 350 °C.
  Caution: The printed pattern (copper foil) may peel away if the heated tip is applied for too long, so be careful!
- Strong viscosity
  Unleaded solder is more viscou-s (sticky, less prone to flow) than ordinary solder so use caution not to let solder bridges occur such as on IC pins, etc.
- Usable with ordinary solder
  It is best to use only unleaded solder but unleaded solder may also be added to ordinary solder.

Note on Schematic Diagram:

- All capacitors are in μF unless otherwise noted. pF: μμF 50 WV or less are not indicated except for electrolytics and tantalums.
- All resistors are in Ω and 1/4 W or less unless otherwise specified.
- : nonflammable resistor.
- : panel designation.

Note:	Note:
The components identified by mark ⚠ or dotted line with mark ⚠ are critical for safety. Replace only with part number specified.	Les composants identifiés par une marque ⚠ sont critiques pour la sécurité. Ne les remplacer que par une piéce portant le numéro spécifié.

- ▬▬ : B+ Line.
- ▬ ▬ ▬ : B– Line.
- Voltage and waveforms are dc with respect to ground under no-signal (detuned) conditions.
  no mark : FM
  ( ) : CD PLAY
  ＊ : Impossible to measure
- Voltages are taken with a VOM (Input impedance 10 MΩ). Voltage variations may be noted due to normal production tolerances.
- Waveforms are taken with a oscilloscope. Voltage variations may be noted due to normal production tolerances.
- Circled numbers refer to waveforms.
- Signal path.
  : TUNER (FM/AM)
  : CD PLAY
  : TAPE PLAY (DECK-A)
  : TAPE PLAY (DECK-B)
  : REC
  : AUDIO
- Abbreviation
  MX : Mexican model
  AR : Argentine model
  E2 : 120 V AC area in E model
  E3 : 240 V AC area in E model
  E51 : Chilean and Peruvian model

5-8. WAVEFORMS

– PANEL Board –

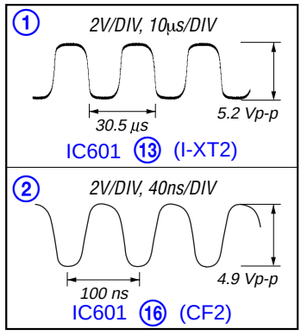

5-9. PRINTED WIRING BOARD — CD MECHANISM SECTION (1/2) — • Refer to page 30 for Circuit Boards Location. : Uses unleaded solder.

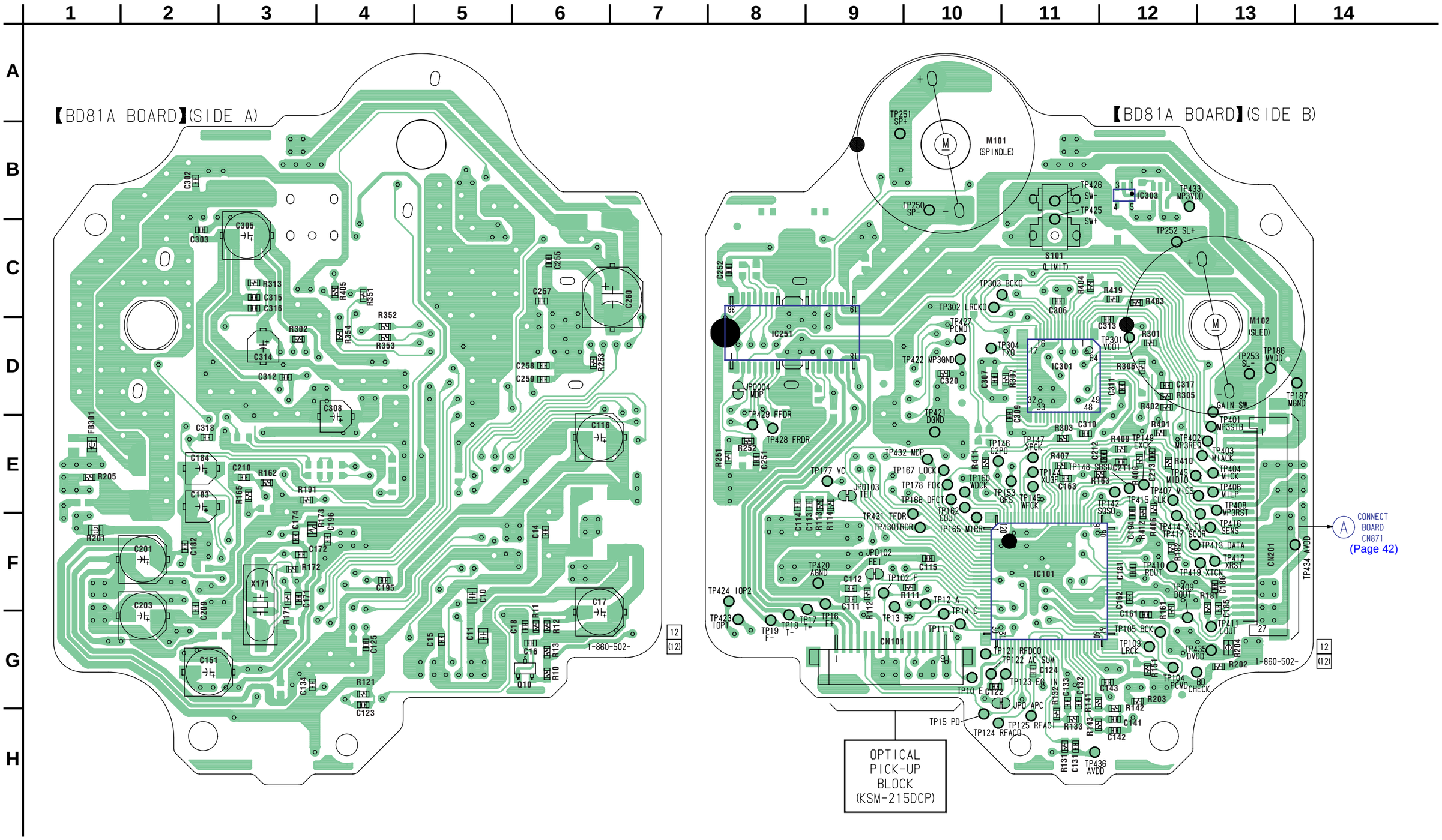

• **Semiconductor Location**

Ref. No.	Location
IC101	F-11
IC251	D-8
IC301	D-11
IC303	B-12
Q10	G-6

5-10. SCHEMATIC DIAGRAM — CD MECHANISM SECTION (1/2) — • Refer to page 52 for IC Block Diagrams.

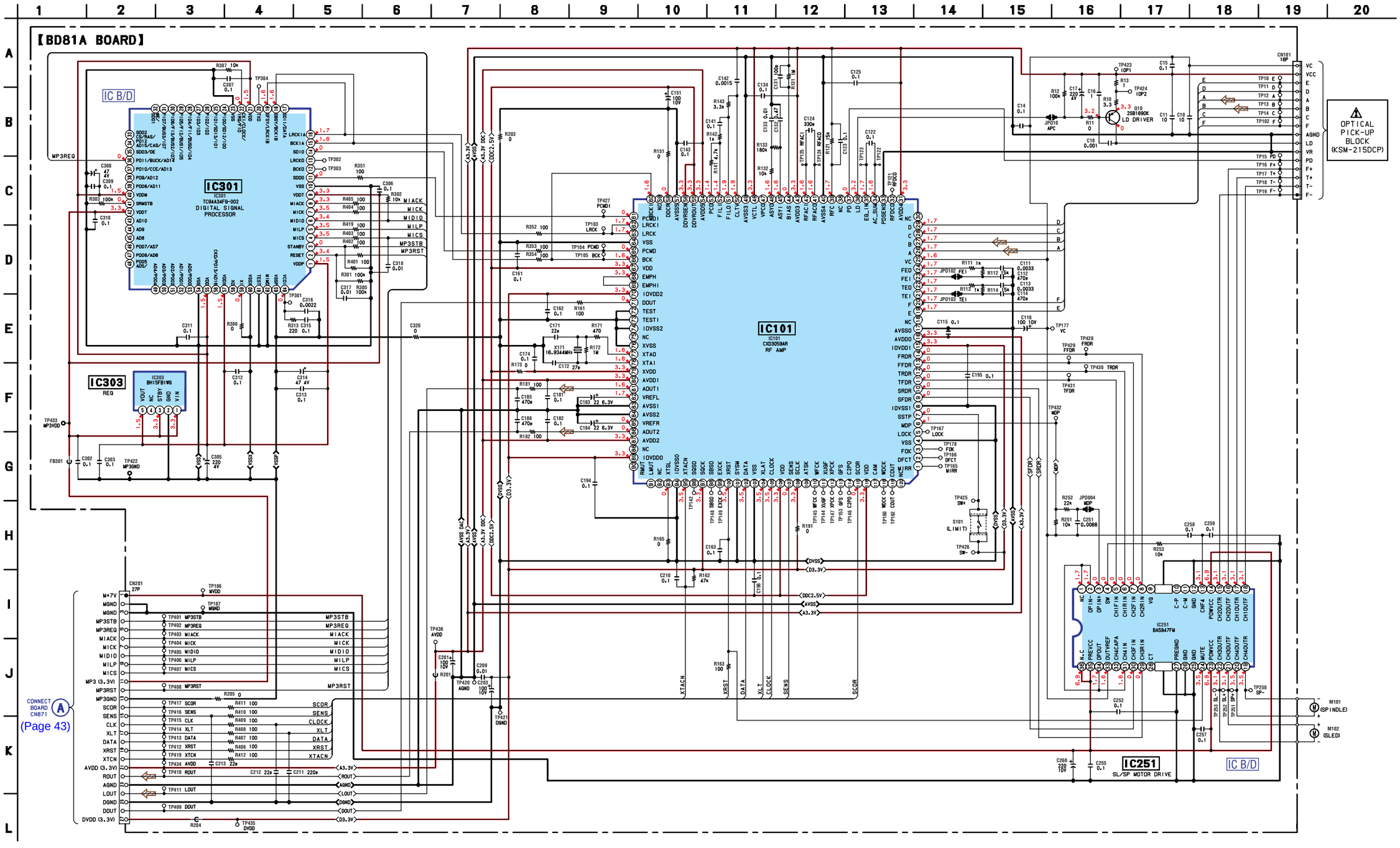

5-11. PRINTED WIRING BOARDS — CD MECHANISM SECTION (2/2) — • Refer to page 30 for Circuit Boards Location. : Uses unleaded solder.

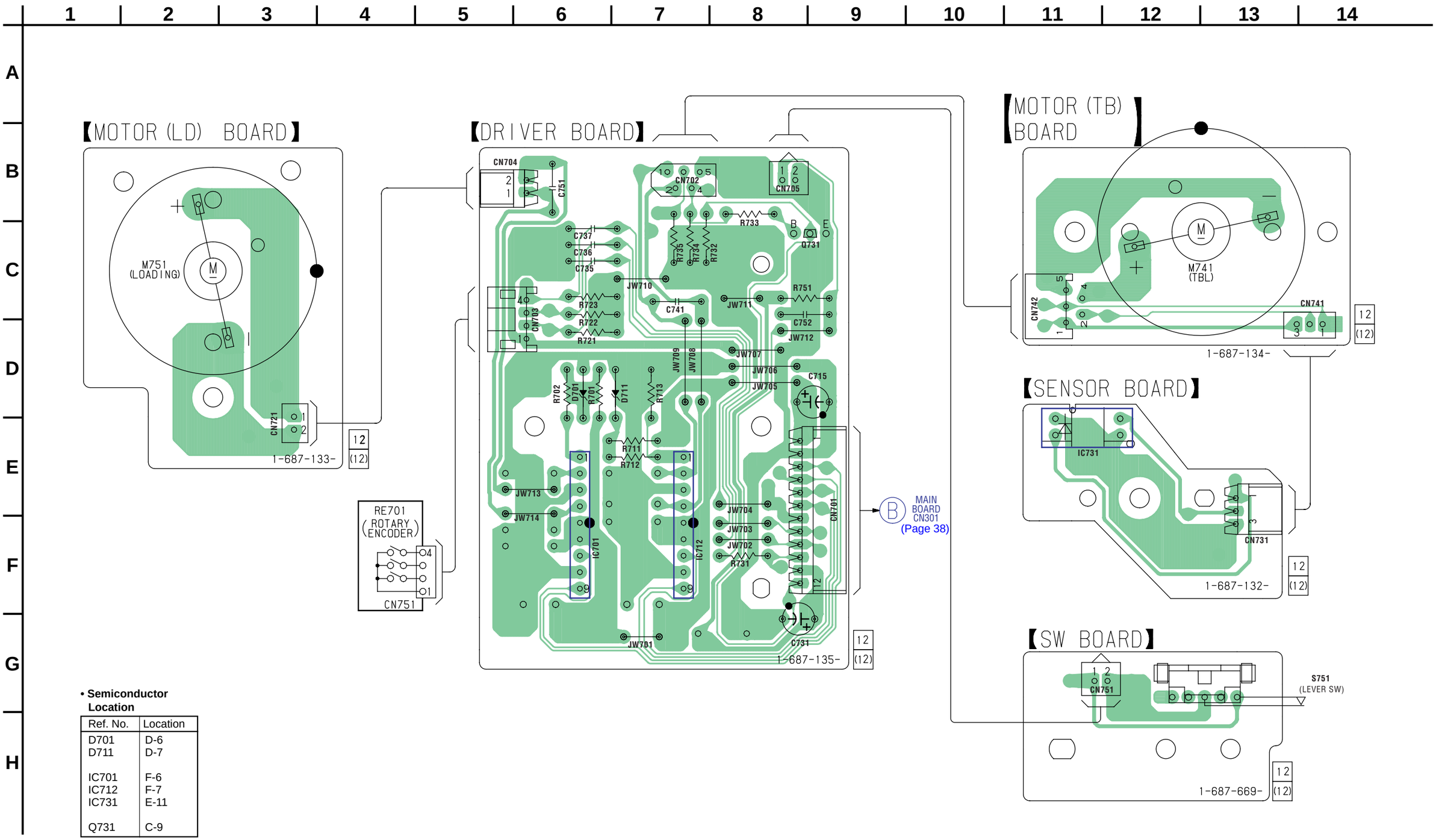

• **Semiconductor Location**

Ref. No.	Location
D701	D-6
D711	D-7
IC701	F-6
IC712	F-7
IC731	E-11
Q731	C-9

5-12. SCHEMATIC DIAGRAM — CD MECHANISM SECTION (2/2) — • Refer to page 52 for IC Block Diagrams.

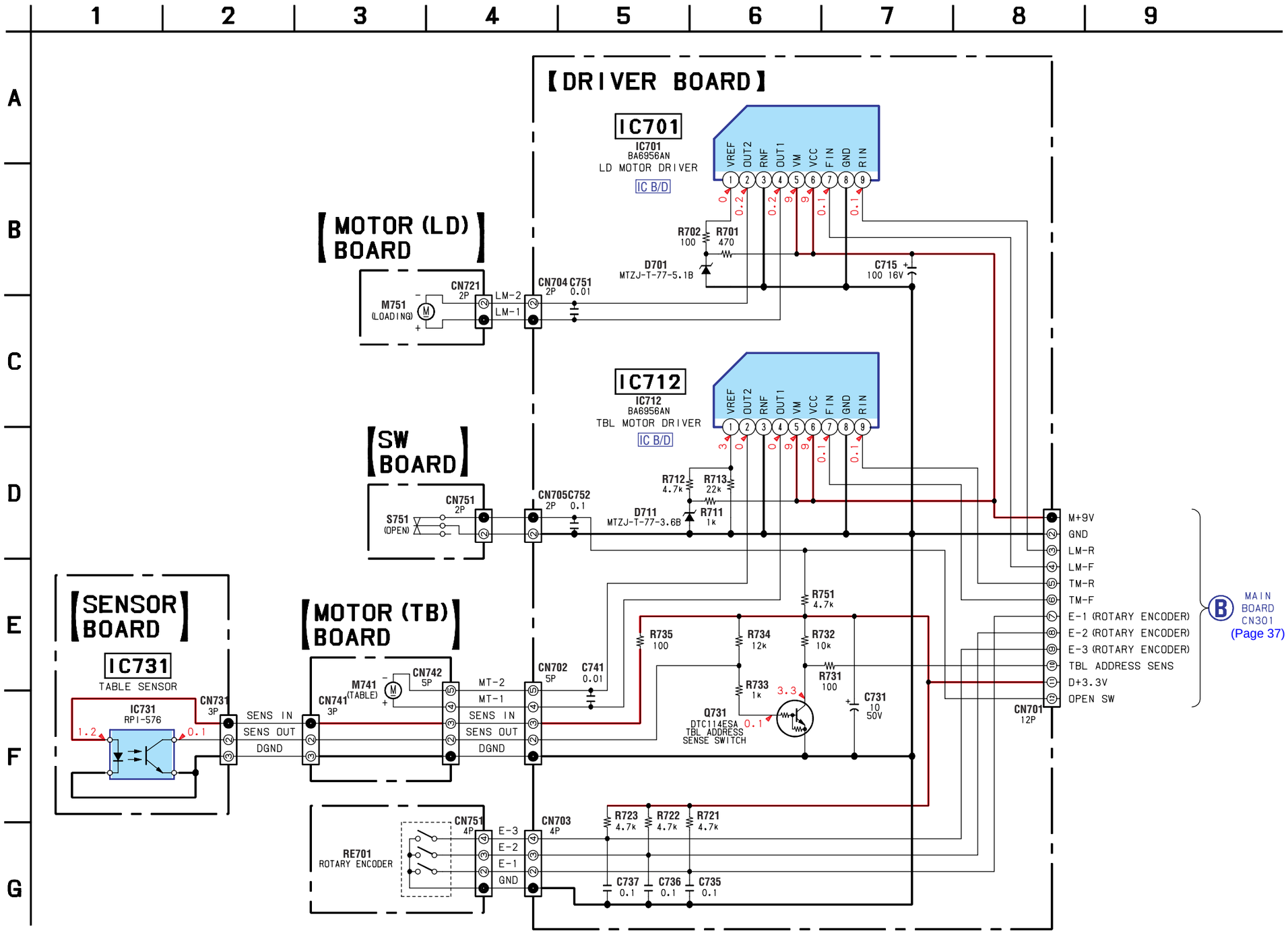

5-13. SCHEMATIC DIAGRAM — MAIN SECTION (1/2) — • Refer to page 53 for IC Block Diagram.

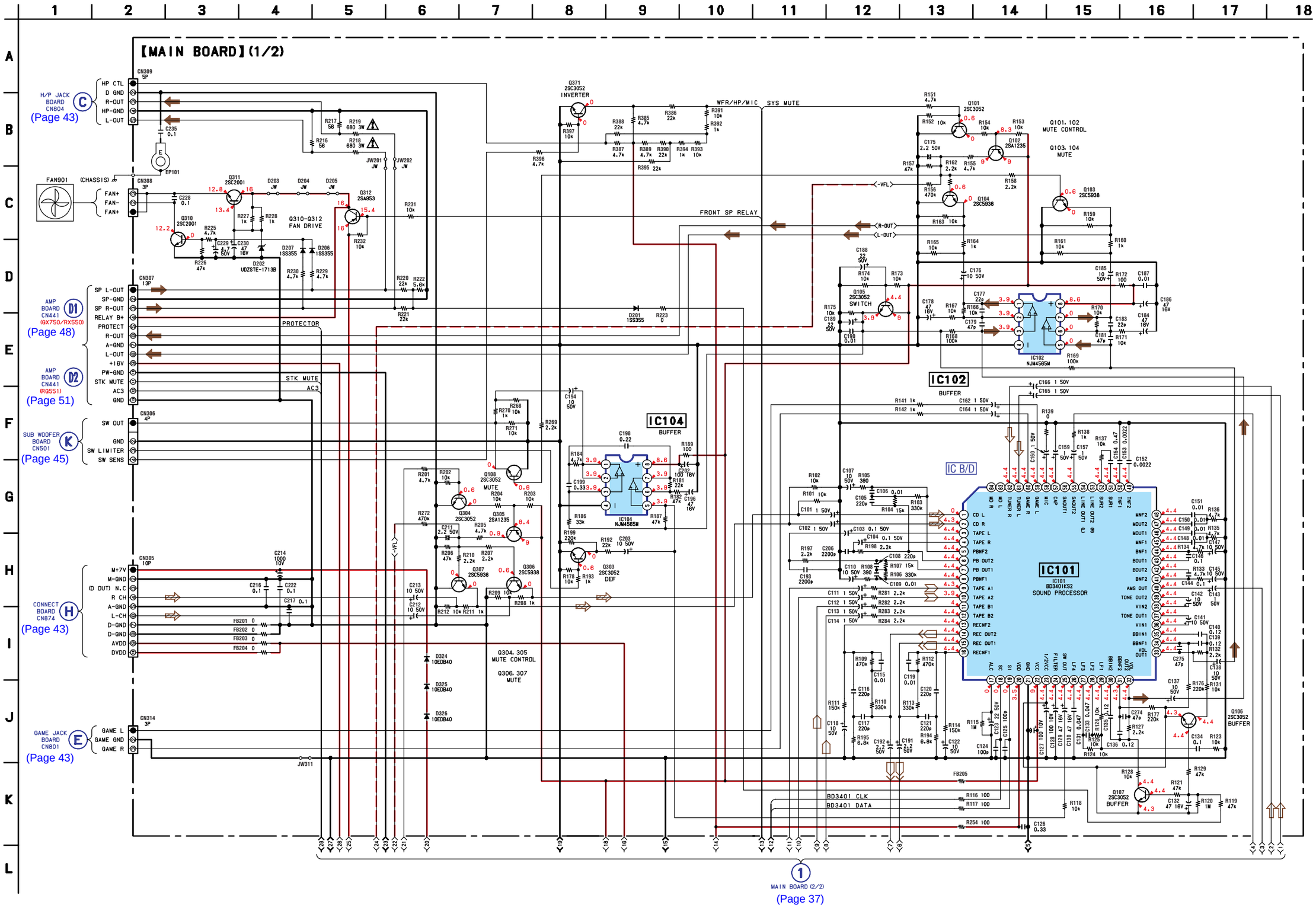

5-14. SCHEMATIC DIAGRAM — MAIN SECTION (2/2) — • Refer to page 53 for IC Block Diagrams.

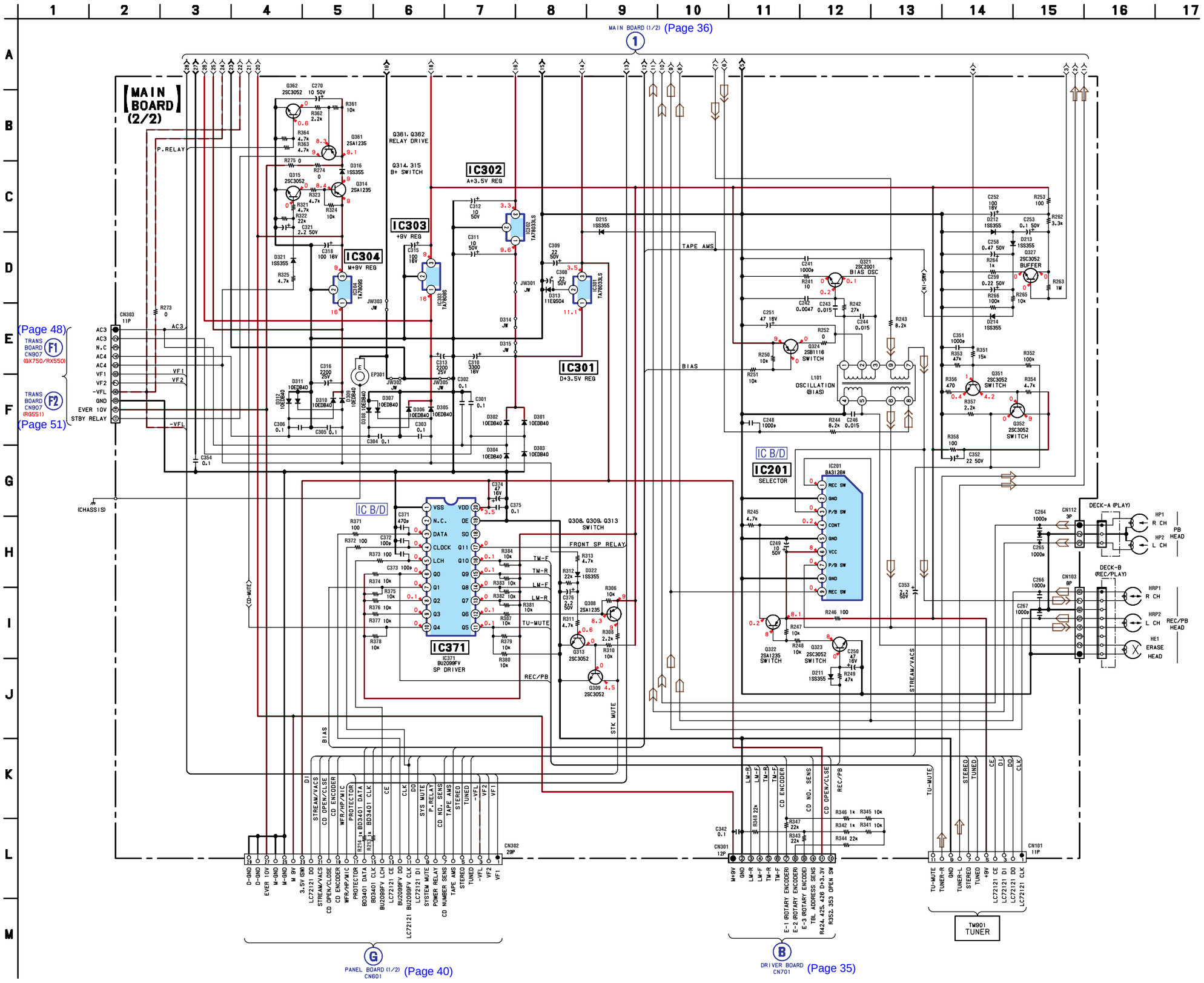

5-15. PRINTED WIRING BOARD — MAIN SECTION — • Refer to page 30 for Circuit Boards Location. : Uses unleaded solder.

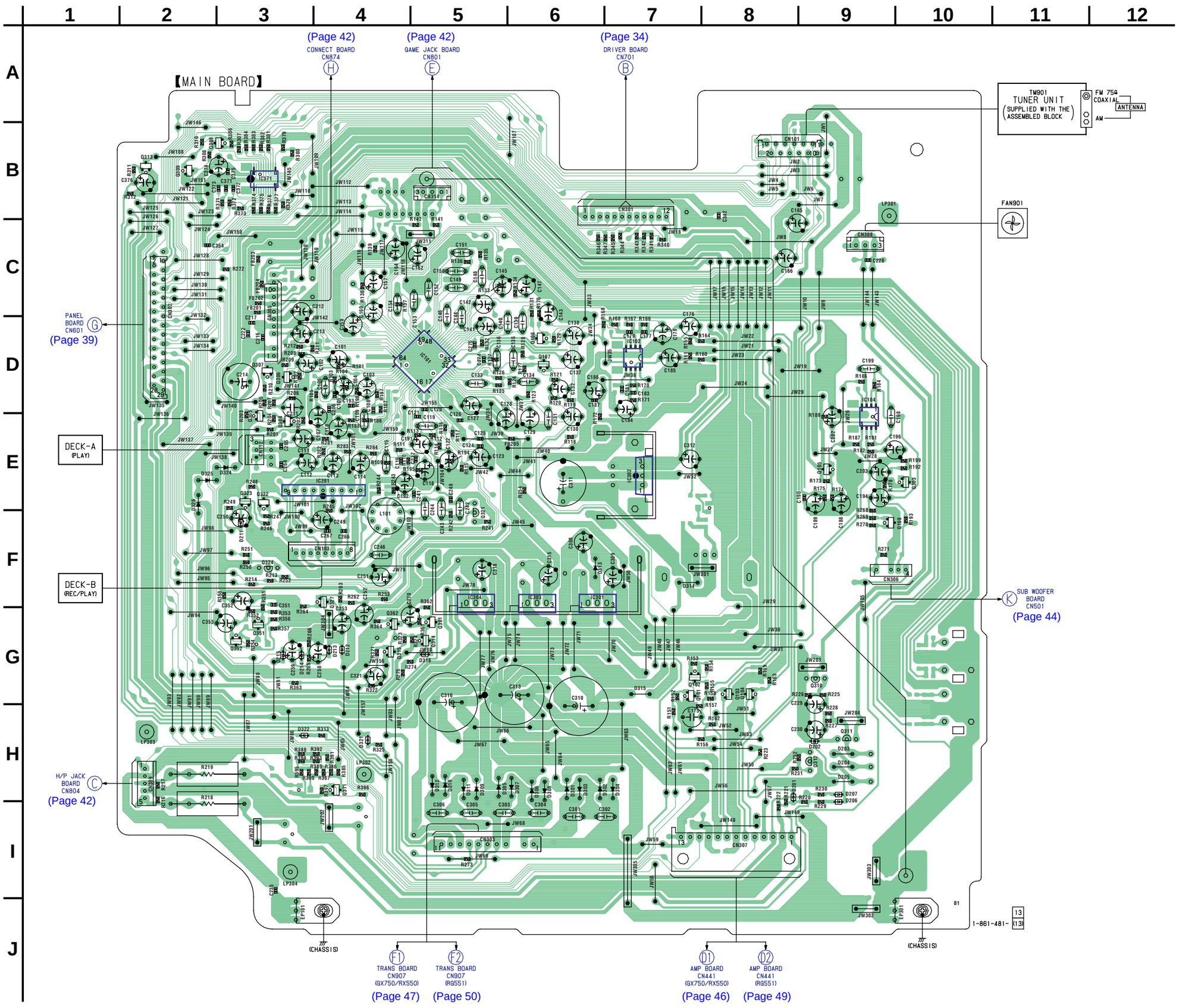

• **Semiconductor Location**

Ref. No.	Location
D201	H-8
D202	H-9
D206	H-9
D207	H-9
D211	F-3
D212	G-4
D213	G-4
D214	G-3
D215	G-3
D301	H-6
D302	H-6
D303	H-6
D304	H-7
D305	H-5
D306	H-6
D307	H-6
D308	H-6
D309	H-5
D310	H-5
D311	H-5
D312	H-5
D313	F-6
D316	G-5
D321	H-4
D322	H-3
D324	E-3
D325	E-2
D326	E-2
IC101	D-5
IC102	D-7
IC104	D-9
IC201	E-4
IC301	F-6
IC302	E-7
IC303	F-6
IC304	F-5
IC371	B-3
Q101	G-7
Q102	G-7
Q103	G-8
Q104	G-8
Q105	E-9
Q106	D-6
Q107	D-6
Q108	F-9
Q303	E-10
Q304	E-3
Q305	E-3
Q306	D-3
Q307	D-3
Q308	B-3
Q309	B-2
Q310	G-9
Q311	H-9
Q312	H-9
Q313	B-2
Q314	G-5
Q315	G-4
Q321	F-5
Q322	E-3
Q323	E-3
Q324	F-3
Q327	F-4
Q351	G-3
Q352	G-3
Q361	G-5
Q362	G-4
Q371	H-4

5-16. PRINTED WIRING BOARDS — PANEL SECTION — • Refer to page 30 for Circuit Boards Location. : Uses unleaded solder.

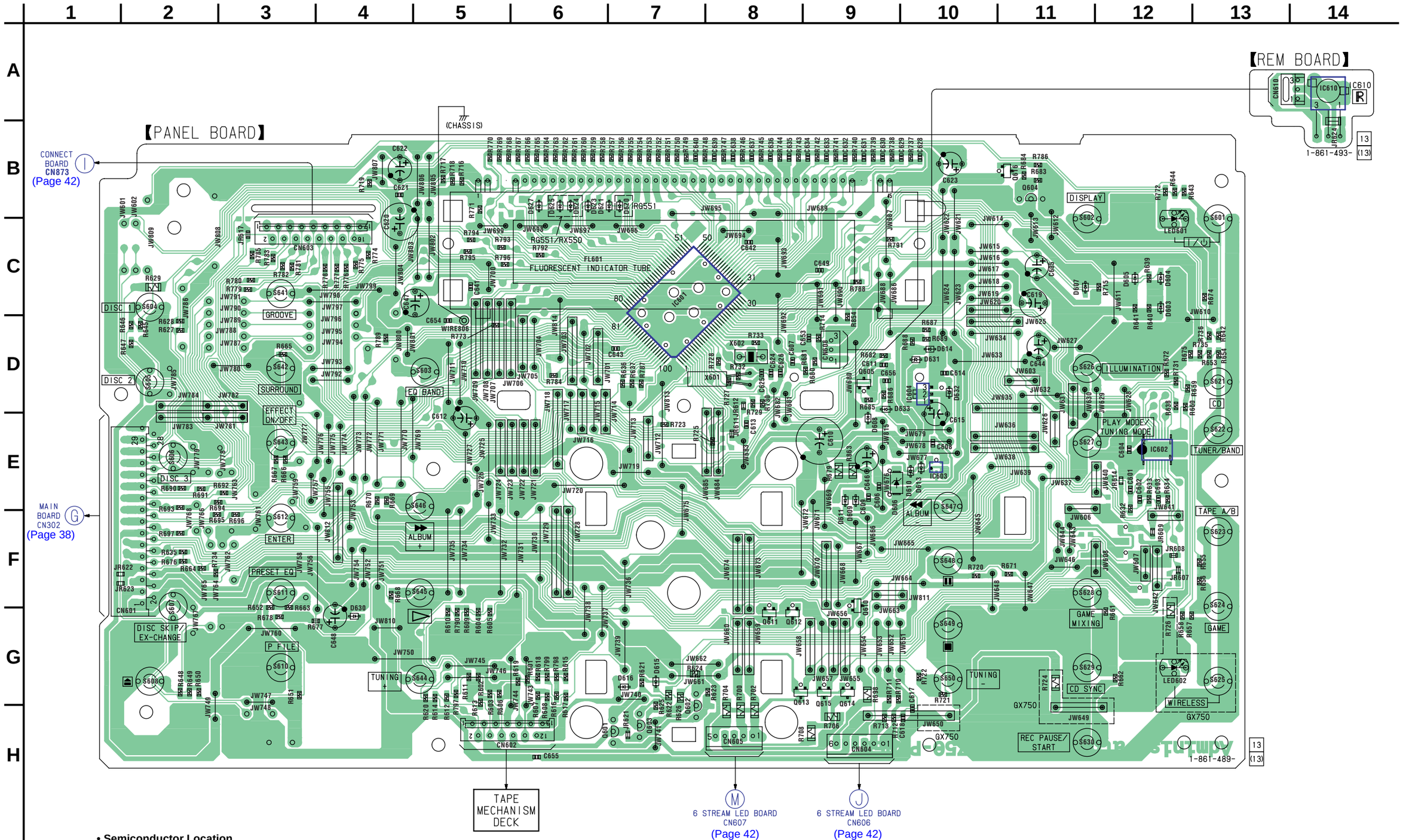

• **Semiconductor Location**

Ref. No.	Location	Ref. No.	Location	Ref. No.	Location	Ref. No.	Location	Ref. No.	Location
D603	C-12	D613	E-10	D627	B-6	IC604	D-10	Q604	B-11
D604	C-12	D614	D-10	D630	G-4	IC610	A-14	Q605	D-9
D605	C-12	D615	G-7	D631	D-10			Q610	G-9
D606	E-9	D616	G-7	D632	D-10	LED601	C-12	Q611	G-8
D607	C-11	D620	B-7	D633	D-9	LED602	G-12	Q612	G-8
D608	E-9	D621	B-6					Q613	G-9
D609	E-9	D623	B-6	IC601	C-7	Q601	H-7	Q614	G-9
D610	E-10	D624	B-6	IC602	E-12	Q602	G-7	Q615	G-9
D611	E-9	D625	B-6	IC603	E-10	Q603	H-7	Q616	B-11

5-17. SCHEMATIC DIAGRAM — PANEL SECTION (1/2) — • Refer to page 53 for IC Block Diagram.

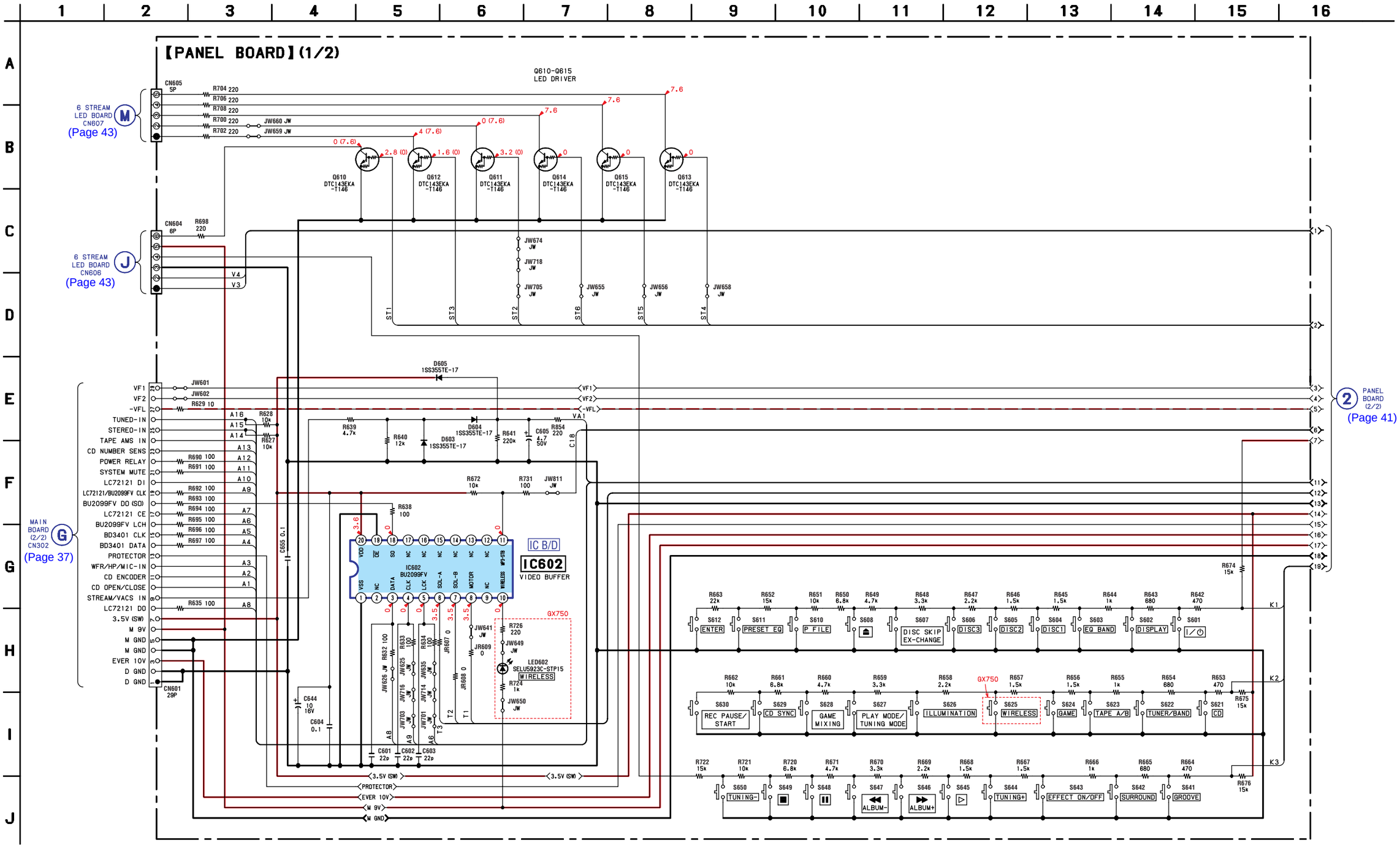

5-18. SCHEMATIC DIAGRAM — PANEL SECTION (2/2) — • Refer to page 31 for Waveforms.

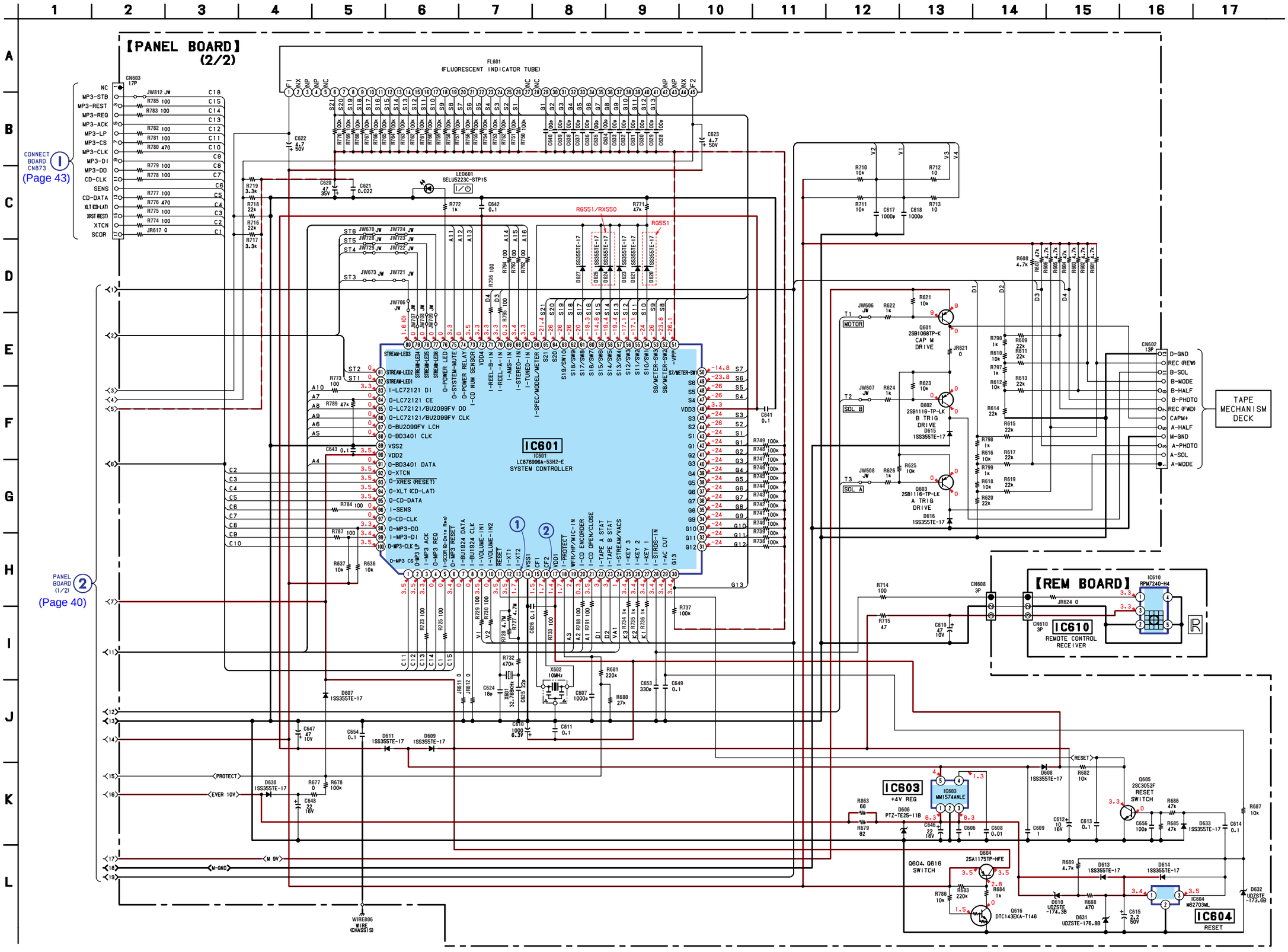

5-19. PRINTED WIRING BOARDS — JACK SECTION — • Refer to page 30 for Circuit Boards Location. : Uses unleaded solder.

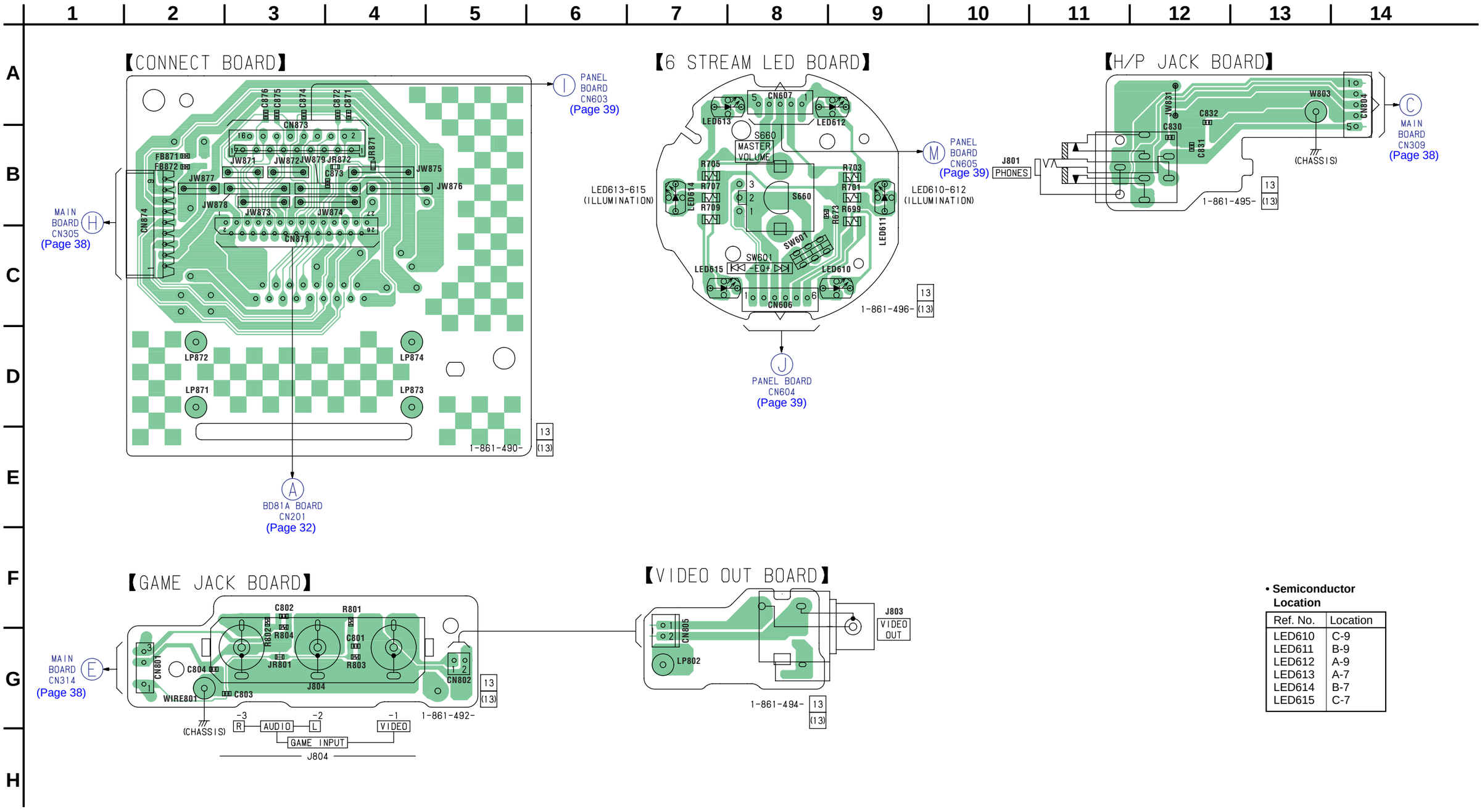

• **Semiconductor Location**

Ref. No.	Location
LED610	C-9
LED611	B-9
LED612	A-9
LED613	A-7
LED614	B-7
LED615	C-7

5-20. SCHEMATIC DIAGRAM — JACK SECTION —

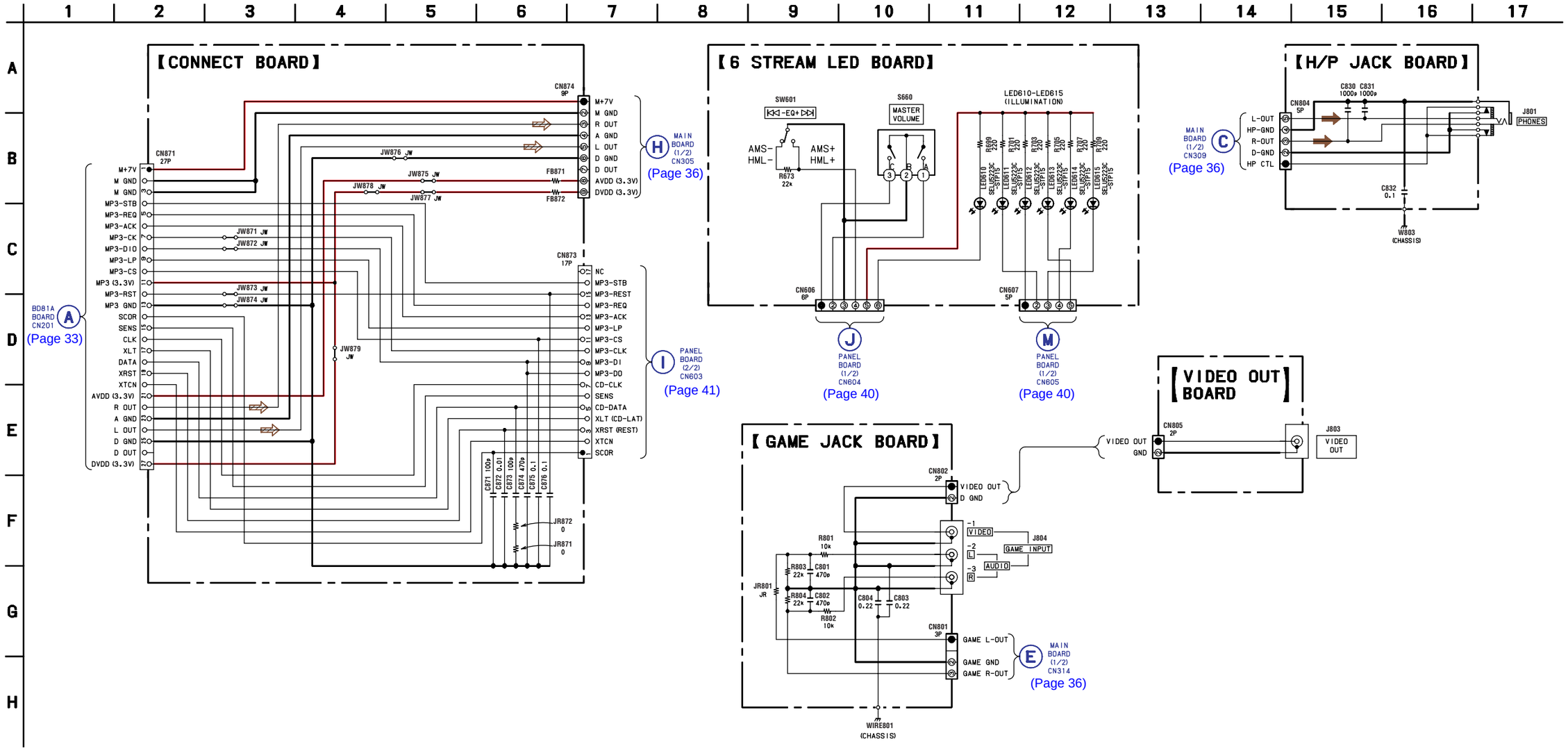

5-21. PRINTED WIRING BOARD — SUB WOOFER SECTION — • Refer to page 30 for Circuit Boards Location. : Uses unleaded solder.

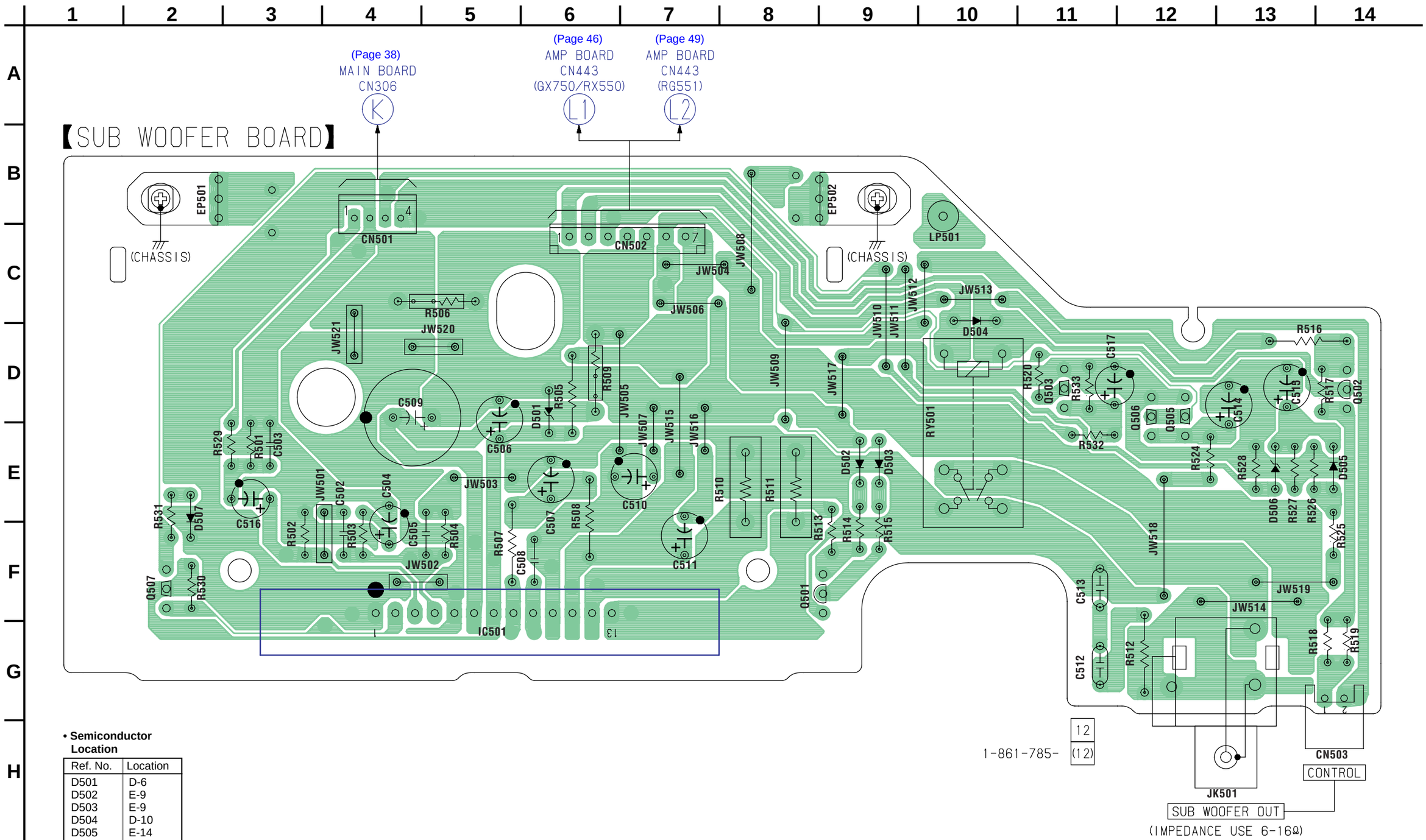

• **Semiconductor Location**

Ref. No.	Location
D501	D-6
D502	E-9
D503	E-9
D504	D-10
D505	E-14
D506	E-13
D507	E-2
IC501	G-5
Q501	F-8
Q502	D-14
Q503	D-11
Q505	D-12
Q506	D-12
Q507	F-2

5-22. SCHEMATIC DIAGRAM — SUB WOOFER SECTION —

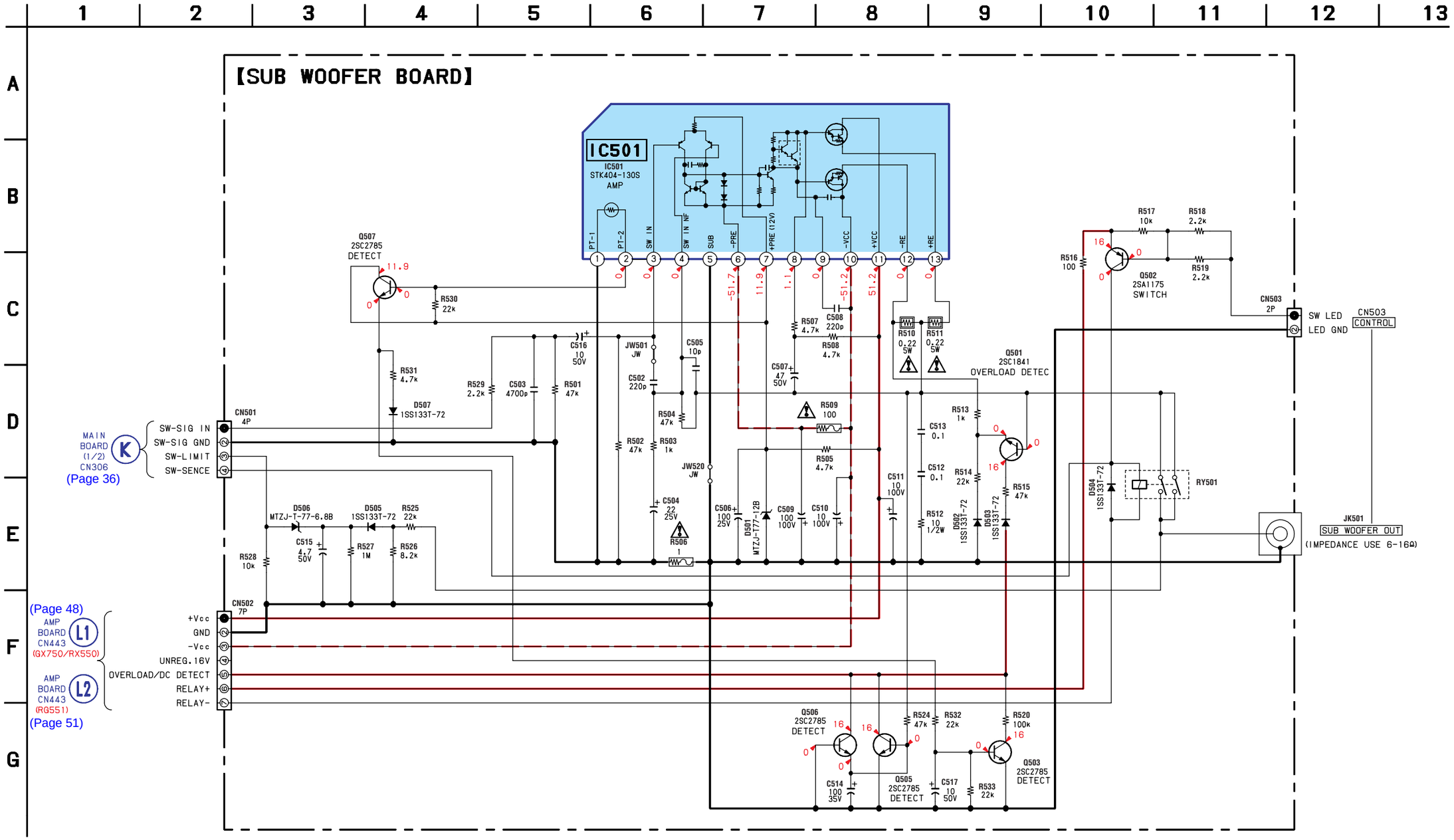

5-23. PRINTED WIRING BOARD — POWER AMP SECTION (GX750/RX550) — • Refer to page 30 for Circuit Boards Location. : Uses unleaded solder.

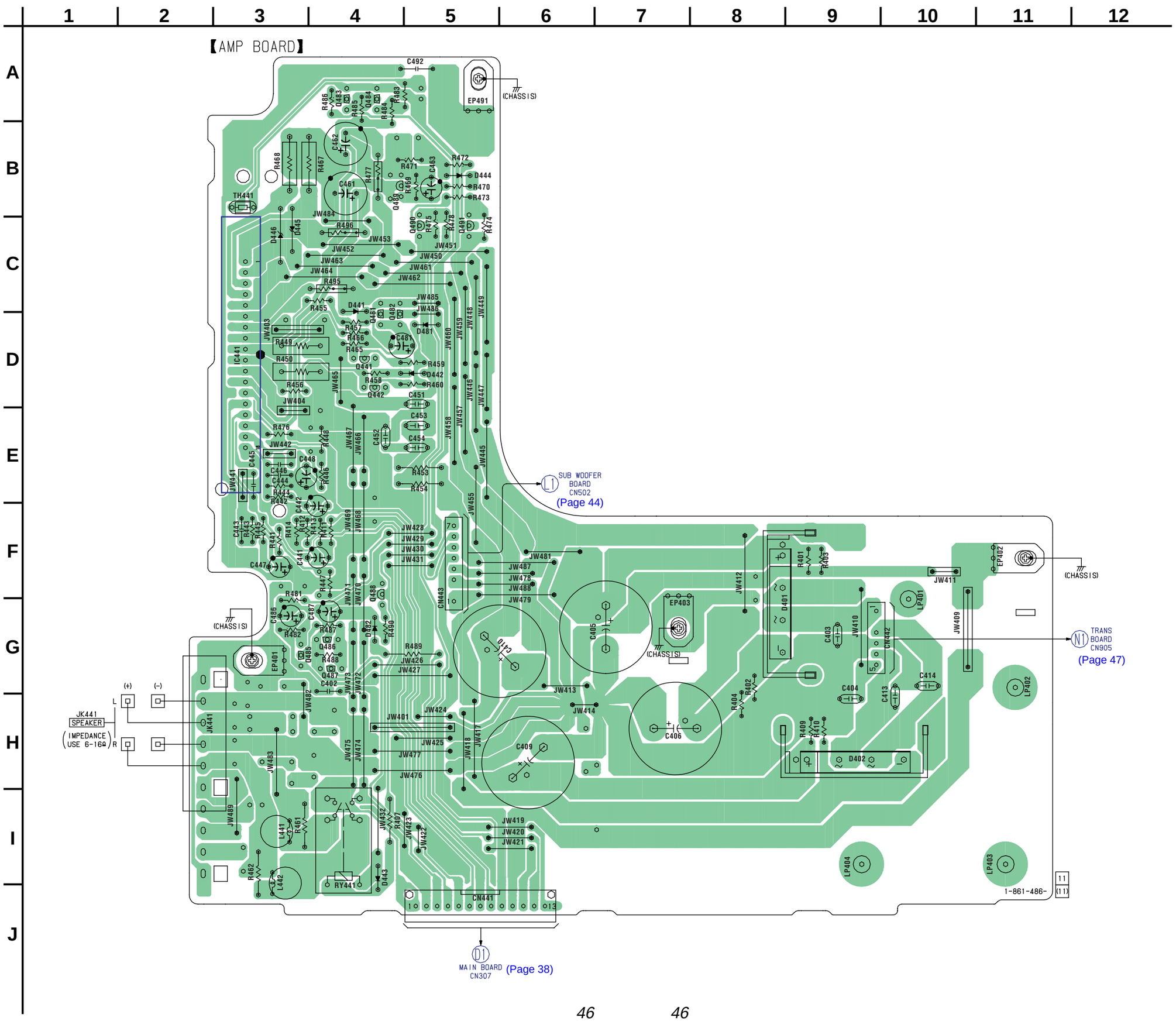

• **Semiconductor Location**

Ref. No.	Location
D401	G-8
D402	H-9
D441	C-4
D442	D-5
D443	I-4
D444	B-5
D445	C-3
D446	C-3
D481	D-5
D482	G-4
IC441	D-3
Q441	D-4
Q442	D-4
Q481	D-4
Q482	D-4
Q483	A-4
Q484	A-4
Q485	G-3
Q486	G-4
Q487	G-4
Q488	F-4
Q489	B-4
Q490	C-5
Q491	C-5

5-24. PRINTED WIRING BOARDS — TRANSFORMER SECTION (GX750/RX550) — • Refer to page 30 for Circuit Boards Location. : Uses unleaded solder.

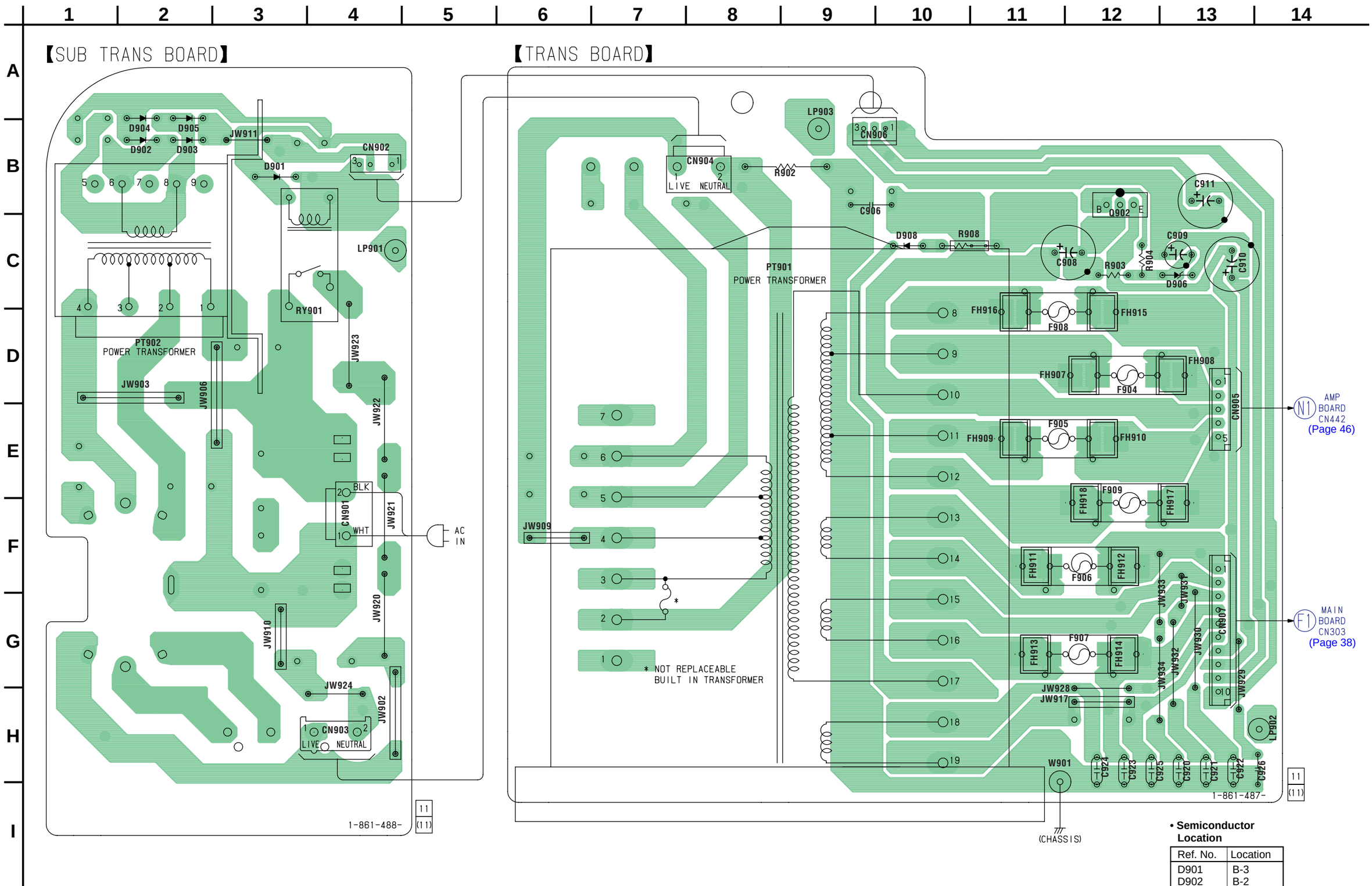

• **Semiconductor Location**

Ref. No.	Location
D901	B-3
D902	B-2
D903	B-2
D904	B-2
D905	B-2
D906	C-13
D908	C-10
Q902	B-12

5-25. SCHEMATIC DIAGRAM — POWER SECTION (GX750/RX550) —

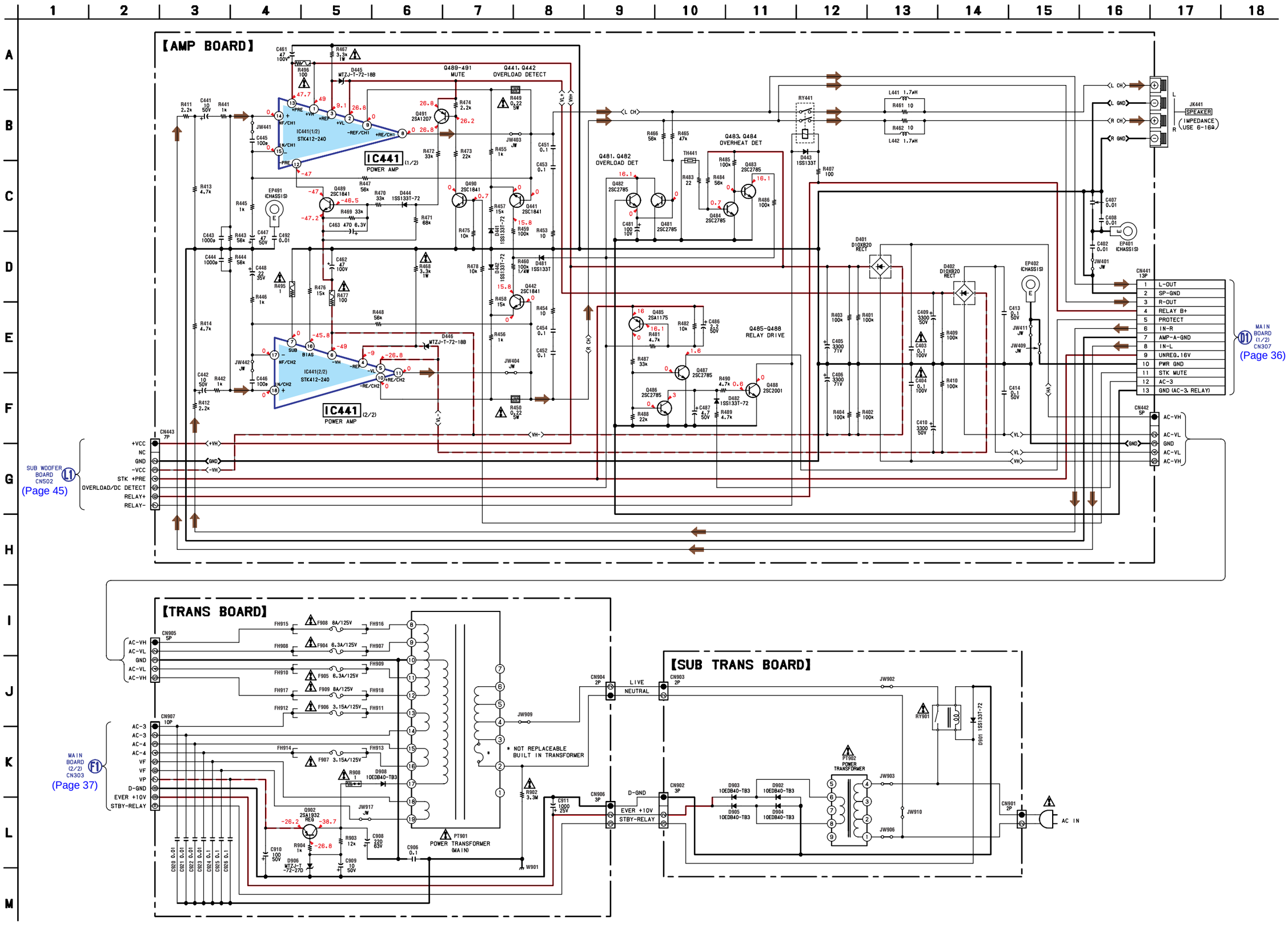

5-26. PRINTED WIRING BOARD — POWER AMP SECTION (RG551) — • Refer to page 30 for Circuit Boards Location. : Uses unleaded solder.

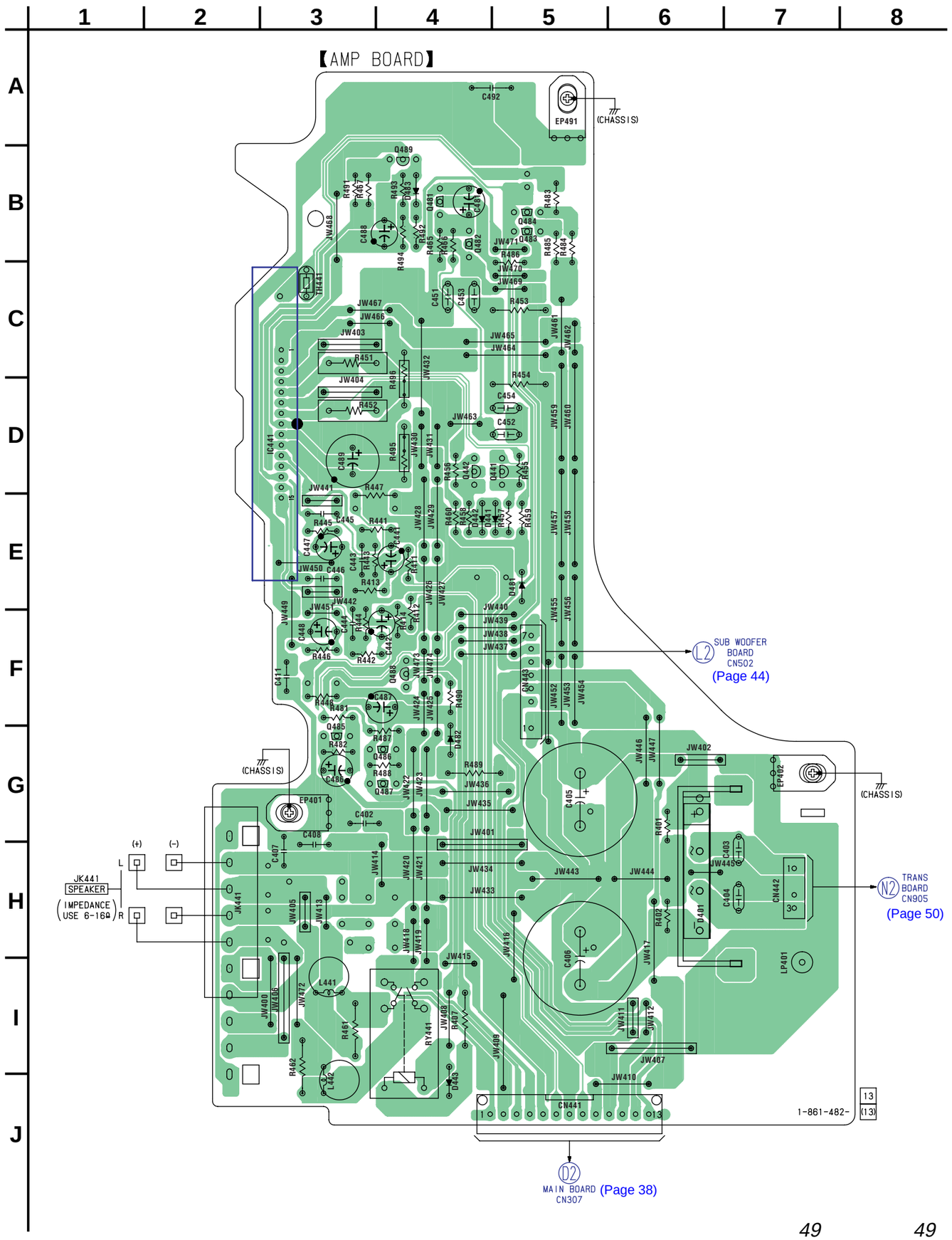

• **Semiconductor Location**

Ref. No.	Location
D401	H-6
D441	E-5
D442	E-4
D443	J-4
D481	E-5
D482	G-4
D483	B-4
IC441	D-3
Q441	D-5
Q442	D-4
Q481	B-4
Q482	B-4
Q483	B-5
Q484	B-5
Q485	G-3
Q486	G-4
Q487	G-4
Q488	F-4
Q489	B-4

5-27. PRINTED WIRING BOARDS — TRANSFORMER SECTION (RG551) — • Refer to page 30 for Circuit Boards Location. : Uses unleaded solder.

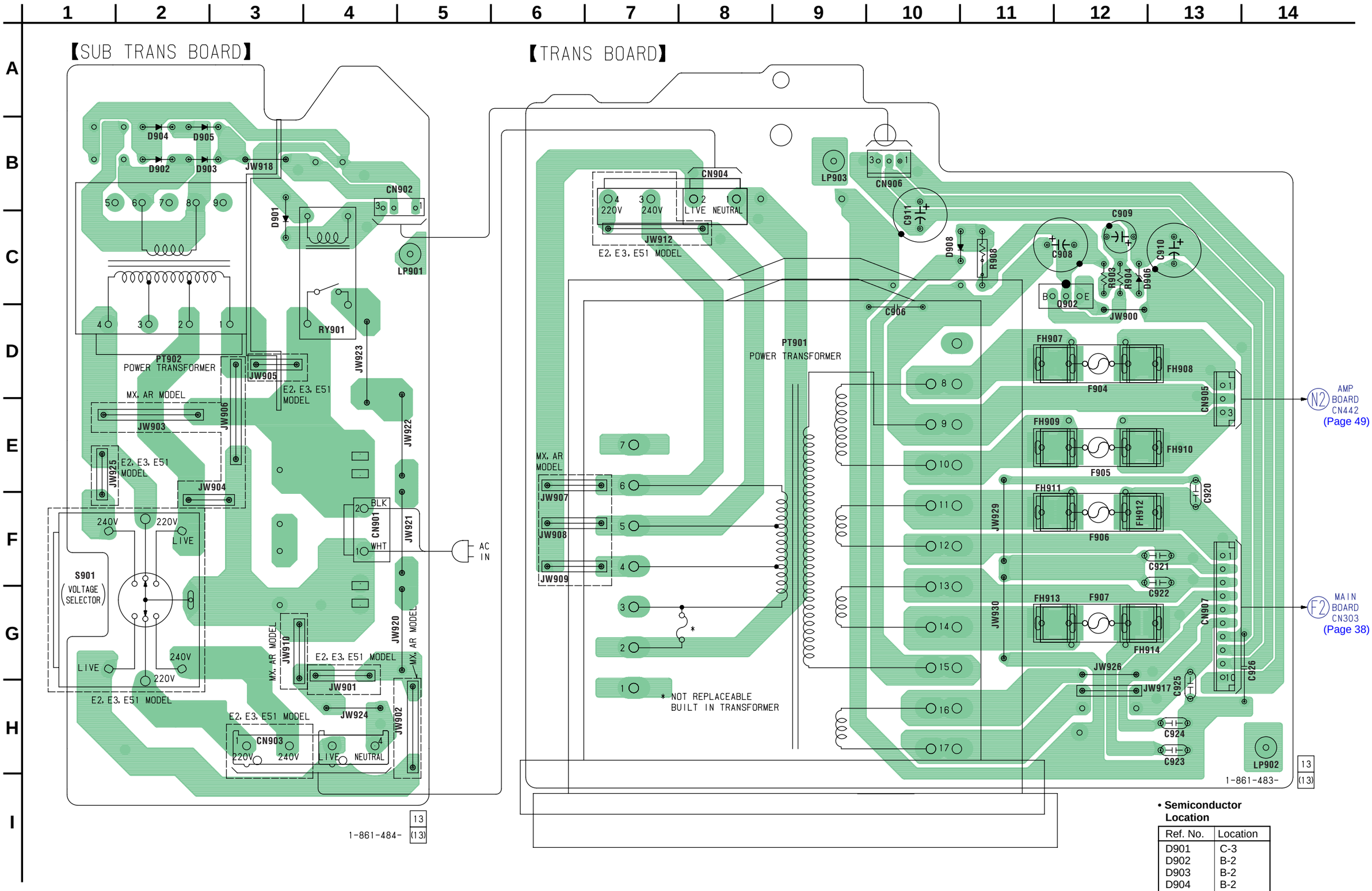

• **Semiconductor Location**

Ref. No.	Location
D901	C-3
D902	B-2
D903	B-2
D904	B-2
D905	B-2
D906	C-12
D908	C-10
Q902	C-12

5-28. SCHEMATIC DIAGRAM — POWER SECTION (RG551) —

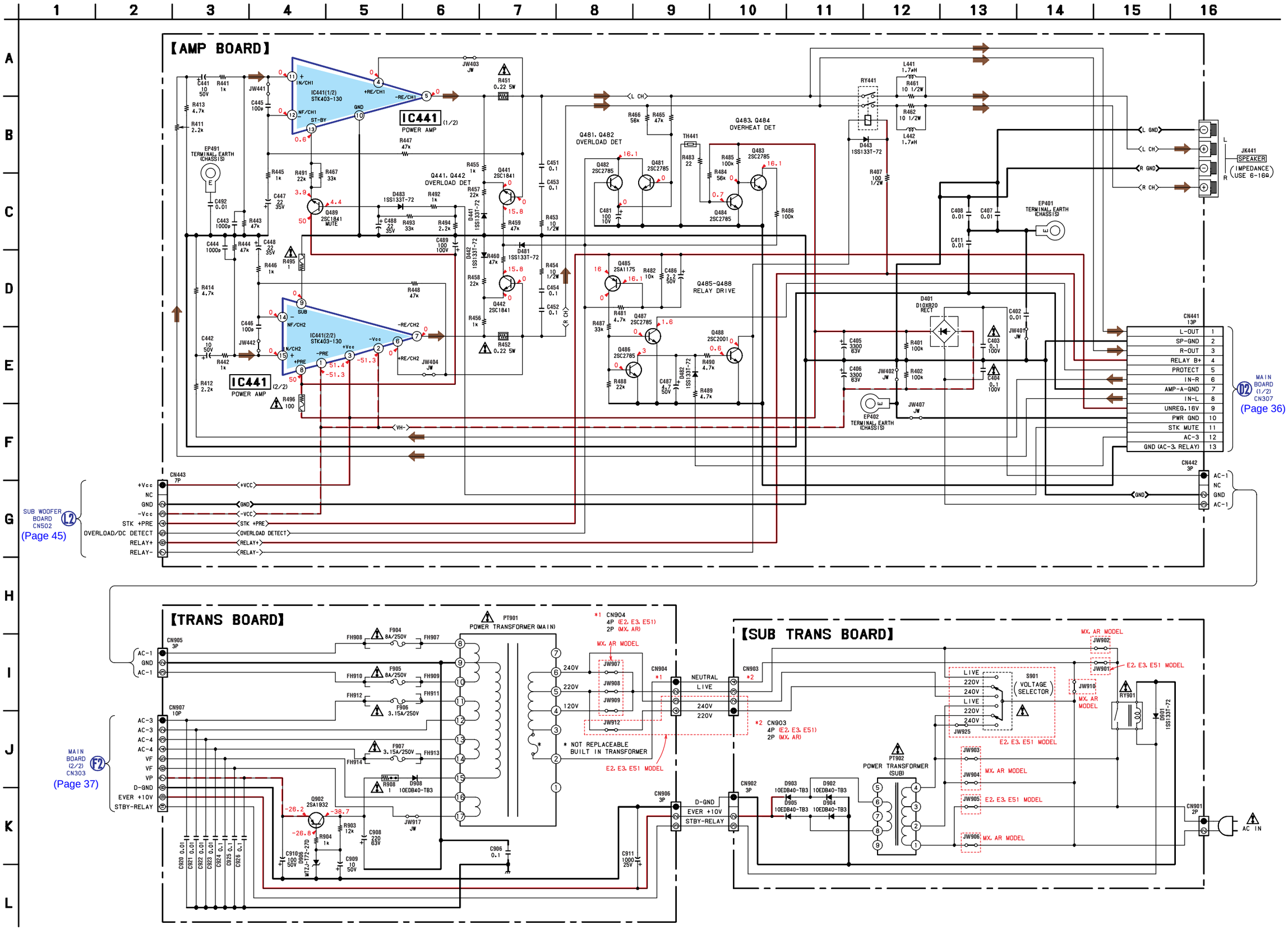

5-29. IC BLOCK DIAGRAMS

IC301 TC94A34FG-002 (BD81A BOARD)

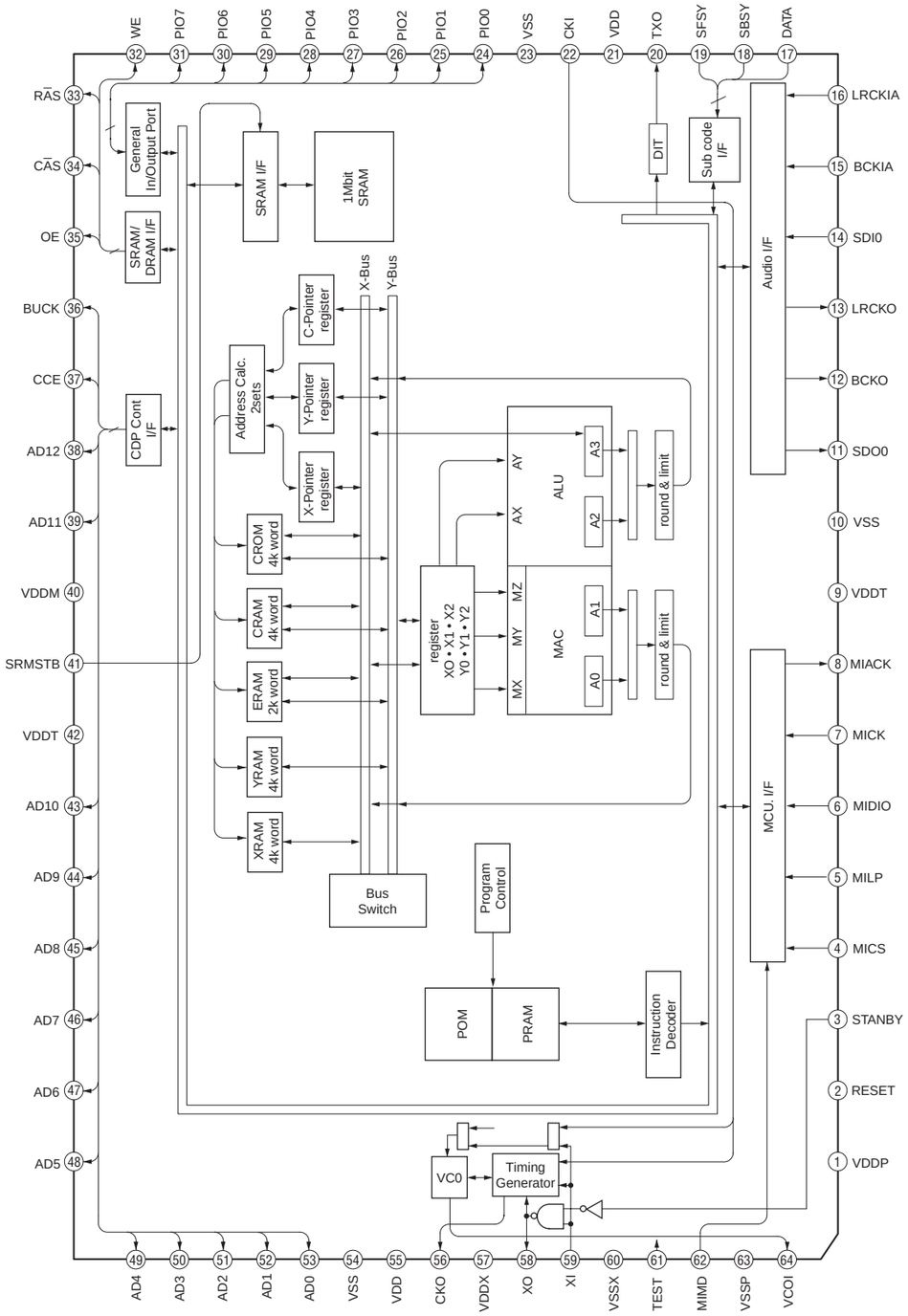

IC251 BA5947FM (BD81A BOARD)

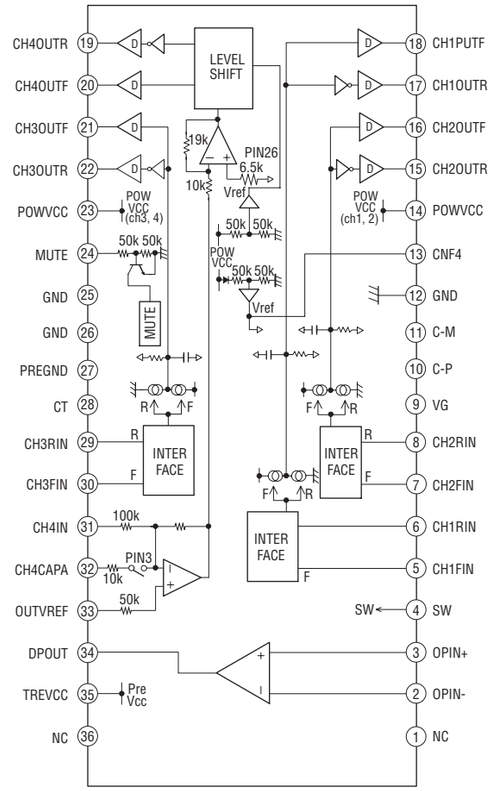

IC701 BA6956AN (DRIVER BOARD)
IC712 BA6956AN (DRIVER BOARD)

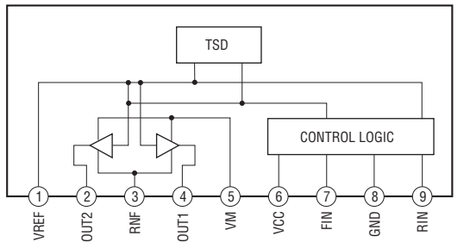

52

IC101 BD3401KS2 (MAIN BOARD)

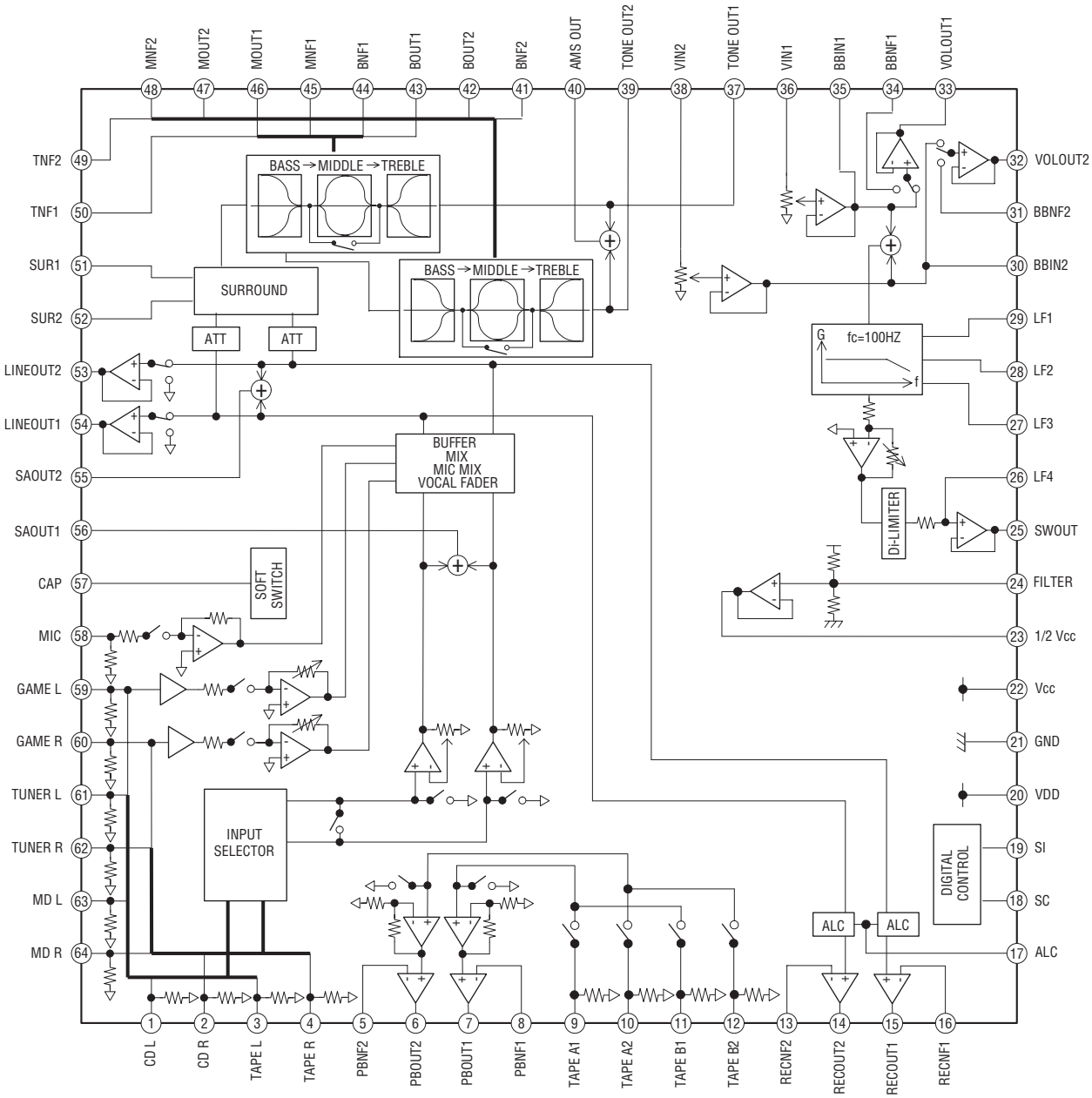

IC201 BA3126N (MAIN BOARD)

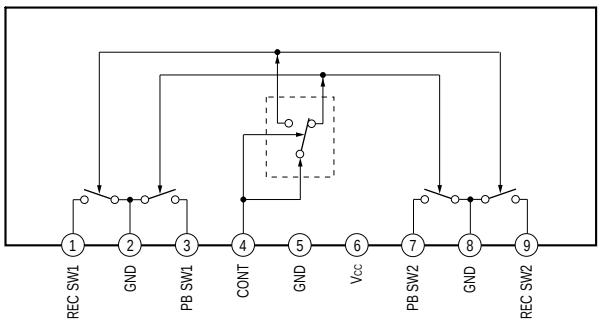

IC371 BU2099FV (MAIN BOARD)
IC602 BU2099FV (PANEL BOARD)

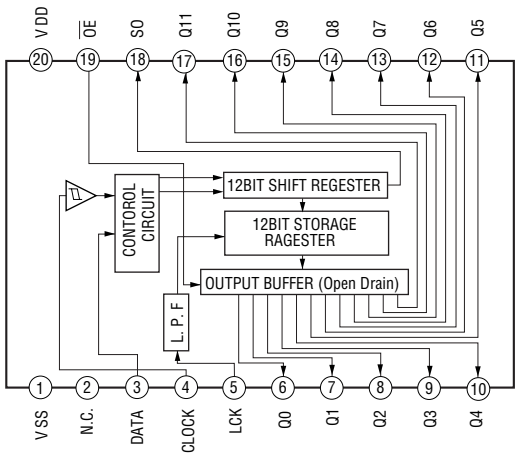

SECTION 6
EXPLODED VIEWS

NOTE:
- The mechanical parts with no reference number in the exploded views are not supplied.
- Items marked "*" are not stocked since they are seldom required for routine service. Some delay should be anticipated when ordering these items.
- -XX and -X mean standardized parts, so they may have some difference from the original one.
- Accessories are given in the last of this parts list.
- Abbreviation
  CND : Canadian model
  MX : Mexican model
  AR : Argentine model
  E2 : 120 V AC area in E model
  E3 : 240 V AC area in E model
  E51 : Chilean and Peruvian model

The components identified by mark ⚠ or dotted line with mark ⚠ are critical for safety.
Replace only with part number specified.

Les composants identifiés par une marque ⚠ sont critiques pour la sécurité.
Ne les remplacer que par une piéce portant le numéro spécifié.

6-1. MAIN SECTION

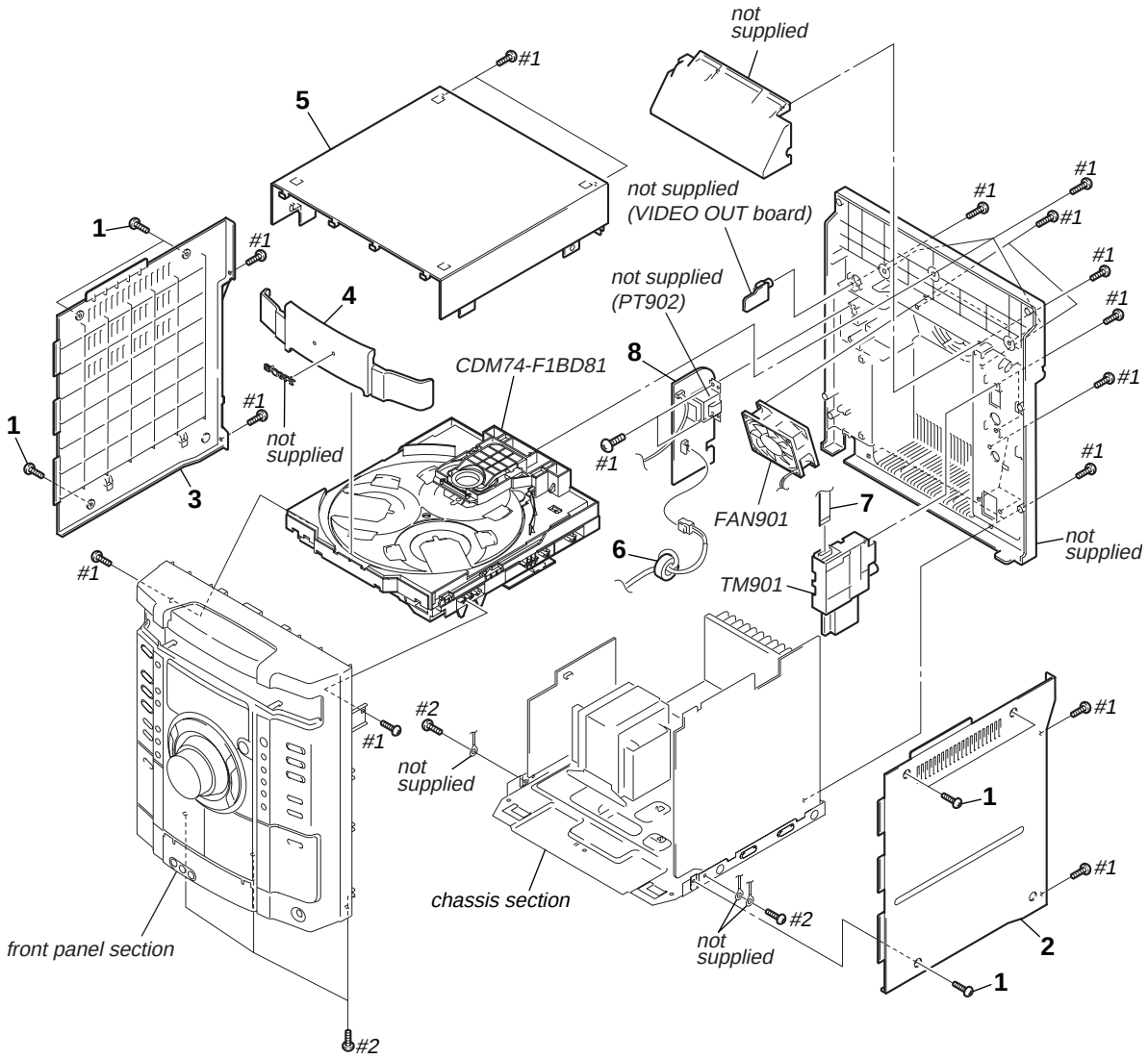

Ref. No.	Part No.	Description	Remark
1	3-363-099-32	SCREW (CASE 3 TP2)	
2	4-245-184-61	CASE (SIDE-R) (US)	
2	4-245-184-71	CASE (SIDE-R) (EXCEPT US)	
3	4-245-183-61	CASE (SIDE-L) (US)	
3	4-245-183-71	CASE (SIDE-L) (EXCEPT US)	
4	4-252-196-81	DOOR, CD (RX550)	
4	4-252-196-91	DOOR, CD (RG551)	
4	4-253-803-01	DOOR, CD (GX750)	
5	4-244-849-61	CASE (TOP) (US)	
5	4-244-849-71	CASE (TOP) (EXCEPT US)	
6	1-400-285-11	F-BEAD, E2515MRT	

Ref. No.	Part No.	Description	Remark
7	1-769-940-11	WIRE (FLAT TYPE) (11 CORE)	
8	X-4956-292-1	SUB TRANS BOARD, COMPLETE (GX750/RX550)	
8	X-4956-294-1	SUB TRANS BOARD, COMPLETE (RG551:E2,E3,E51,AR)	
8	X-4956-322-1	SUB TRANS BOARD, COMPLETE (RG551:MX)	
FAN901	1-763-117-13	FAN, DC	
TM901	1-693-615-11	TUNER PACK (FM/AM) (ANTENNA) (RG551)	
TM901	1-693-631-11	TUNER PACK (FM/AM) (ANTENNA) (RX550)	
TM901	1-693-655-11	TUNER PACK (FM/AM) (ANTENNA) (GX750)	
#1	7-685-647-79	SCREW +BVTP 3X10 TYPE2 IT-3	
#2	7-685-646-79	SCREW +BVTP 3X8 TYPE2 IT-3	

6-2. FRONT PANEL SECTION (1)

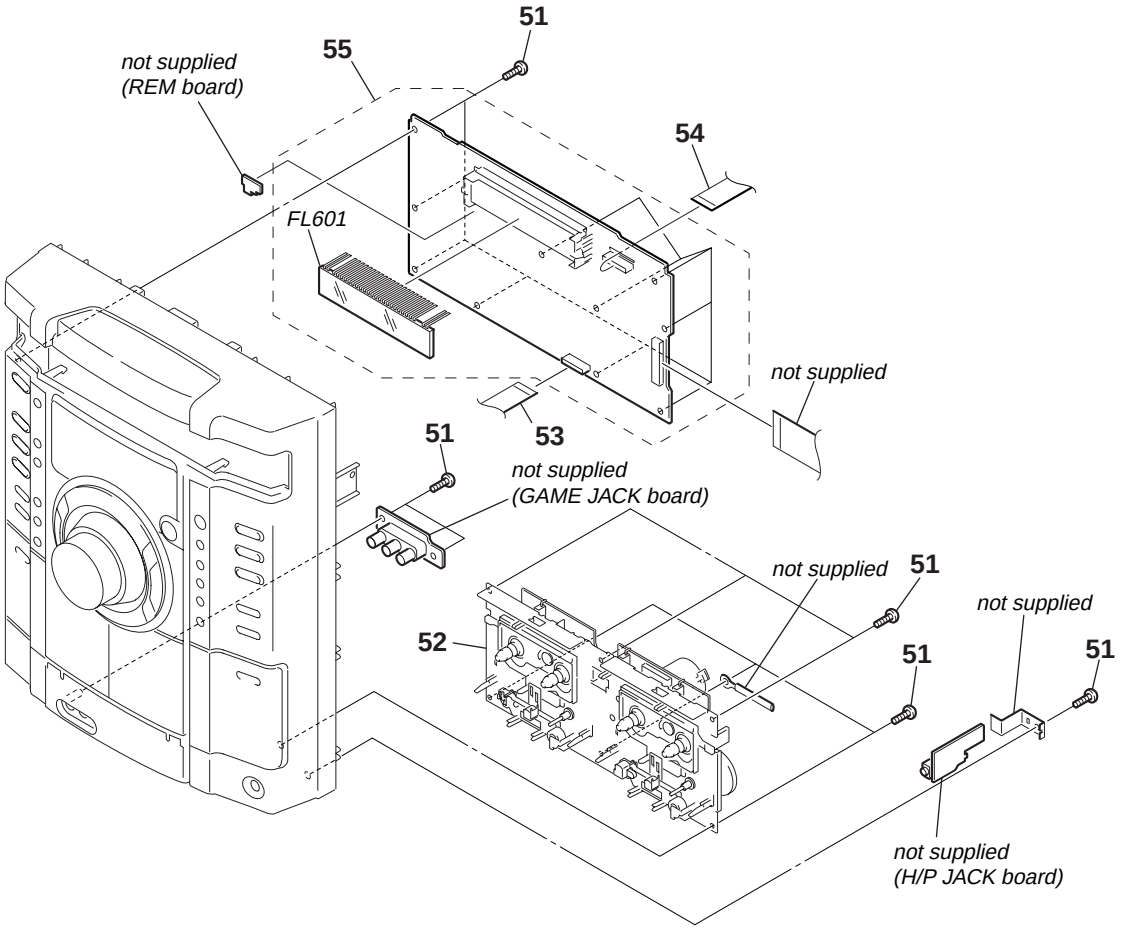

Ref. No.	Part No.	Description	Remark	Ref. No.	Part No.	Description	Remark
51	4-951-620-01	SCREW (2.6X8), +BVTP		55	A-4751-531-A	PANEL BOARD, COMPLETE (GX750)	
52	1-796-485-51	DECK, MECHANICAL		55	A-4751-540-A	PANEL BOARD, COMPLETE (RG551)	
53	1-769-975-11	WIRE (FLAT TYPE) (13 CORE)		55	A-4751-721-A	PANEL BOARD, COMPLETE (RX550)	
54	1-773-048-11	WIRE (FLAT TYPE) (17 CORE)		FL601	1-518-976-11	INDICATOR TUBE, FLUORESCENT	

6-3. FRONT PANEL SECTION (2)

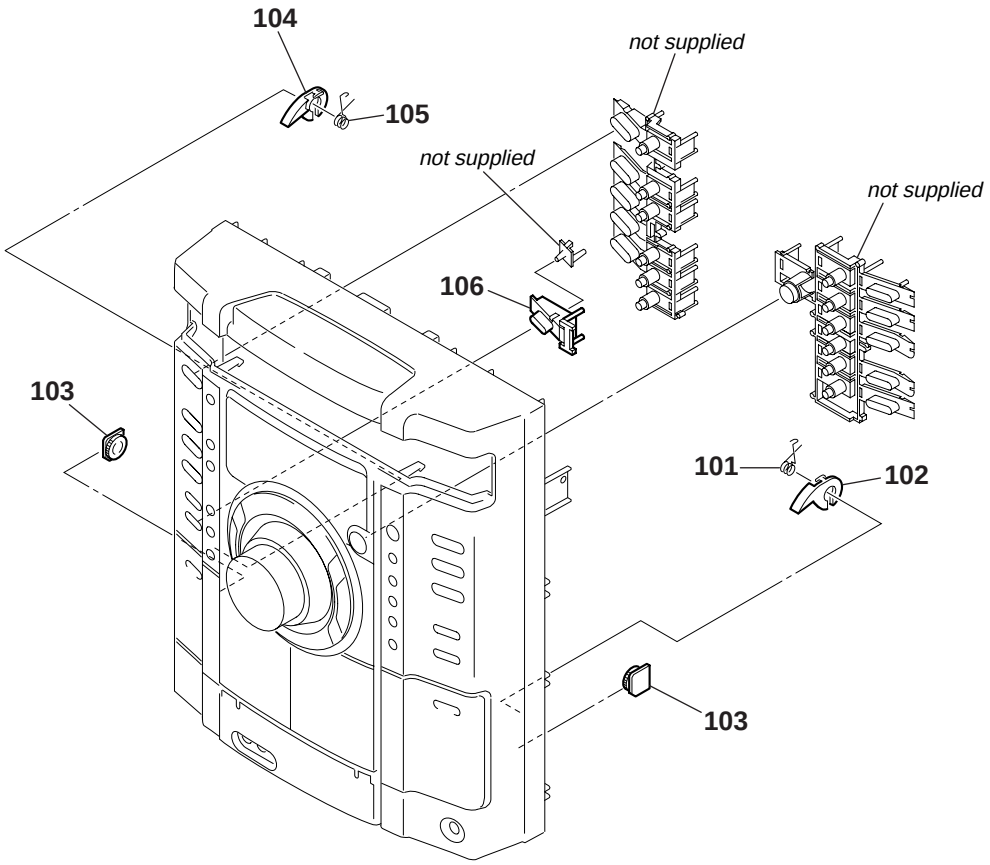

Ref. No.	Part No.	Description	Remark	Ref. No.	Part No.	Description	Remark
101	4-231-841-01	SPRING (HEART CAM-B)		104	4-231-824-01	CAM (A), HEART	
102	4-231-825-01	CAM (B), HEART		105	4-231-836-01	SPRING (HEART CAM-A)	
103	4-224-104-41	DAMPER		106	4-252-217-01	BUTTON, WAT (GX750)	

6-4. FRONT PANEL SECTION (3)

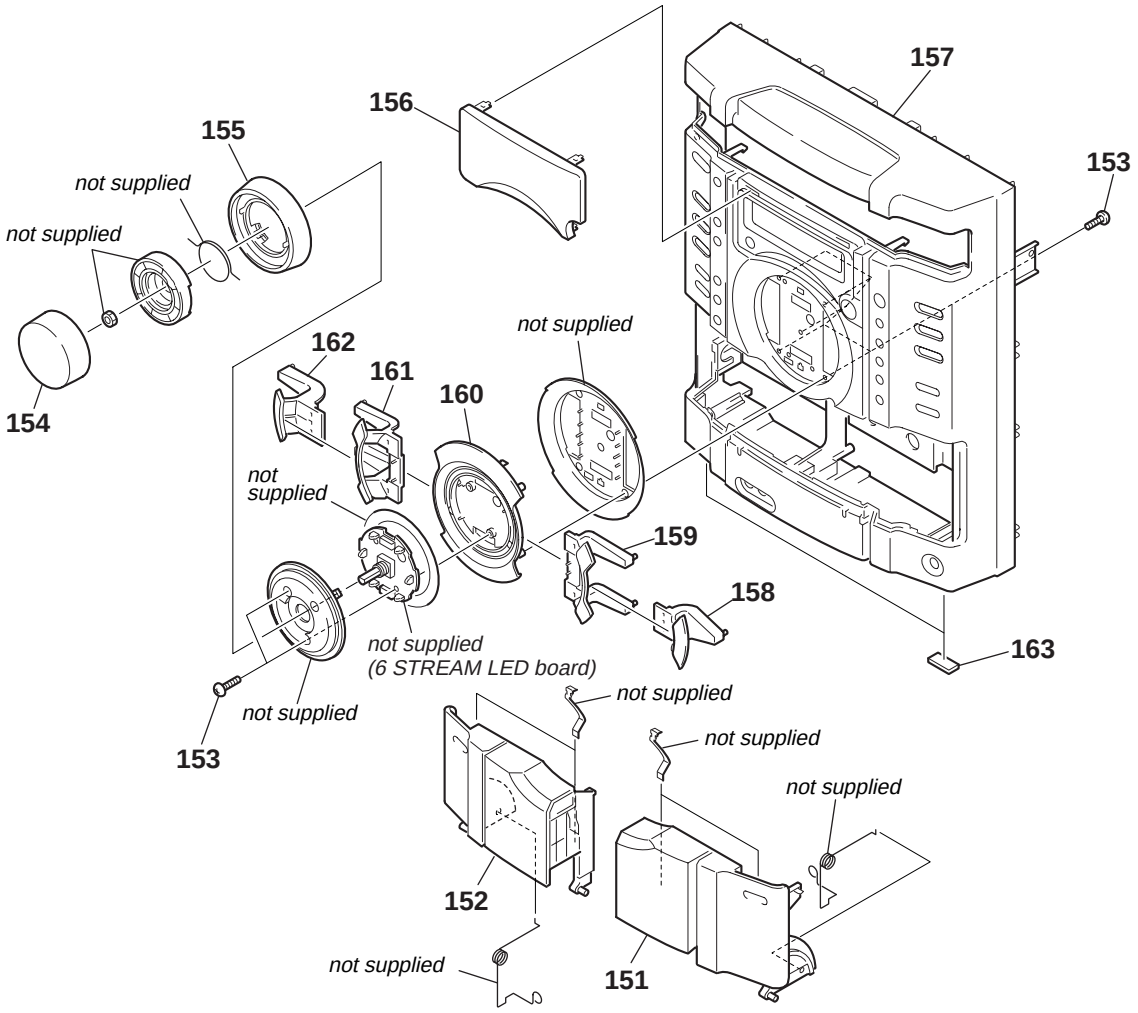

Ref. No.	Part No.	Description	Remark
151	4-252-202-01	DOOR (B), CASS	
152	4-252-201-01	DOOR (A), CASS	
153	4-951-620-01	SCREW (2.6X8), +BVTP	
154	4-252-214-01	KNOB, VOLUME	
155	X-4956-295-1	RING ASSY, KNOB (GX750/RG551)	
155	X-4956-477-1	RING ASSY, KNOB (RX550)	
156	4-252-198-01	WINDOW, DISPLAY	
157	4-252-195-21	PANEL, FRONT (RX550)	
157	4-252-195-31	PANEL, FRONT (RG551)	
157	4-252-195-61	PANEL, FRONT (GX750:US)	
157	4-252-195-71	PANEL, FRONT (GX750:CND)	

Ref. No.	Part No.	Description	Remark
158	4-252-205-01	BUTTON, PLAY (GX750/RG551)	
158	4-252-205-21	BUTTON, PLAY (RX550)	
159	4-252-207-11	BUTTON, FF/ALBUM+ (GX750/RG551)	
159	4-252-207-21	BUTTON, FF (RX550)	
160	4-252-200-01	COVER, BUTTON (GX750/RG551)	
160	4-252-200-11	COVER, BUTTON (RX550)	
161	4-252-208-11	BUTTON, FR/ALBUM– (GX750/RG551)	
161	4-252-208-21	BUTTON, FR (RX550)	
162	4-252-206-01	BUTTON, STOP (GX750/RG551)	
162	4-252-206-11	BUTTON, STOP (RX550)	
163	4-225-252-01	CUSHION (FOOT)	

6-5. MAIN BOARD SECTION

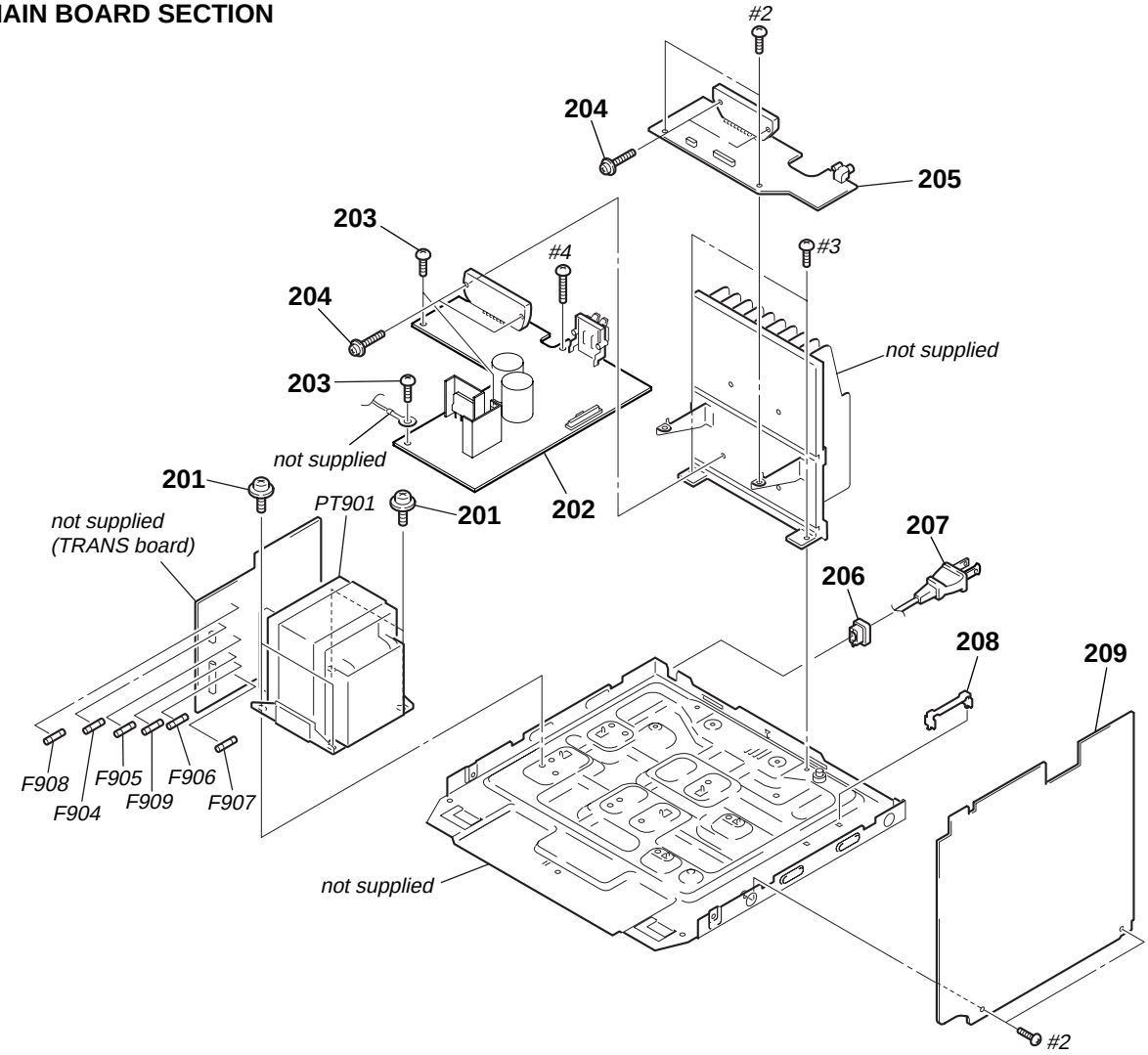

The components identified by mark ⚠ or dotted line with mark ⚠ are critical for safety. Replace only with part number specified.	Les composants identifiés par une marque ⚠ sont critiques pour la sécurité. Ne les remplacer que par une piéce portant le numéro spécifié.

Ref. No.	Part No.	Description	Remark
201	4-242-527-01	S-SCREW, ITC+4-8 R	
202	A-4751-535-A	AMP BOARD, COMPLETE (GX750)	
202	A-4751-543-A	AMP BOARD, COMPLETE (RG551:E2,E3,E51)	
202	A-4751-723-A	AMP BOARD, COMPLETE (RX550)	
202	A-4752-178-A	AMP BOARD, COMPLETE (RG551:MX)	
202	A-4752-188-A	AMP BOARD, COMPLETE (RG551:AR)	
203	4-242-539-01	BVIT3B+3-8R W/O SLOT	
204	3-905-609-41	SCREW (TRANSISTOR)	
205	A-4752-173-A	SUB WOOFER BOARD, COMPLETE	
206	3-703-244-00	BUSHING (2104), CORD (US,CND,E51,AR)	
206	3-703-571-00	BUSHING (S) (4516), CORD (MX)	
* 206	3-703-571-12	BUSHING (S) (4516), CORD (E2,E3)	
⚠207	1-783-531-12	CORD, POWER (GX750/RX550)	
⚠207	1-783-941-22	CORD, POWER (RG551:AR)	
⚠207	1-777-071-83	CORD, POWER (RG551:E51)	
⚠207	1-827-226-21	CORD, POWER (RG551:E2,E3,MX)	
208	4-988-533-01	HOLDER, PWB	
209	A-4752-167-A	MAIN BOARD, COMPLETE	
⚠F904	1-533-454-12	FUSE, GLASS TUBE (DIA.5) (6.3A/125V)	(GX750/RX550)
⚠F904	1-576-655-12	FUSE, GLASS TUBE (DIA.5) (T8AL/250V)	(RG551)
⚠F905	1-533-454-12	FUSE, GLASS TUBE (DIA.5) (6.3A/125V)	(GX750/RX550)
⚠F905	1-576-655-12	FUSE, GLASS TUBE (DIA.5) (T8AL/250V)	(RG551)
⚠F906	1-533-451-12	FUSE, GLASS TUBE (DIA.5) (3.15A/125V)	(GX750/RX550)
⚠F906	1-533-470-12	FUSE, GLASS TUBE (DIA.5) (T3.15AL/250V)	(RG551)
⚠F907	1-533-451-12	FUSE, GLASS TUBE (DIA.5) (3.15A/125V)	(GX750/RX550)
⚠F907	1-533-470-12	FUSE, GLASS TUBE (DIA.5) (T3.15AL/250V)	(RG551)
⚠F908	1-576-537-12	FUSE, GLASS TUBE (DIA.5) (8A/125V)	(GX750/RX550)
⚠F909	1-576-537-12	FUSE, GLASS TUBE (DIA.5) (8A/125V)	(GX750/RX550)
⚠PT901	1-443-237-11	TRANSFORMER, POWER (RG551:E2,E3,E51,AR)	
⚠PT901	1-443-253-11	TRANSFORMER, POWER (GX750/RX550)	
⚠PT901	1-443-284-11	TRANSFORMER, POWER (RG551:MX)	
#2	7-685-646-79	SCREW +BVTP 3X8 TYPE2 IT-3	
#3	7-685-881-09	SCREW +BVTT 4X8 (S)	
#4	7-685-649-79	SCREW +BVTP 3X14 TYPE2 IT-3	

6-6. CD MECHANISM SECTION (1) (CDM74-F1BD81)

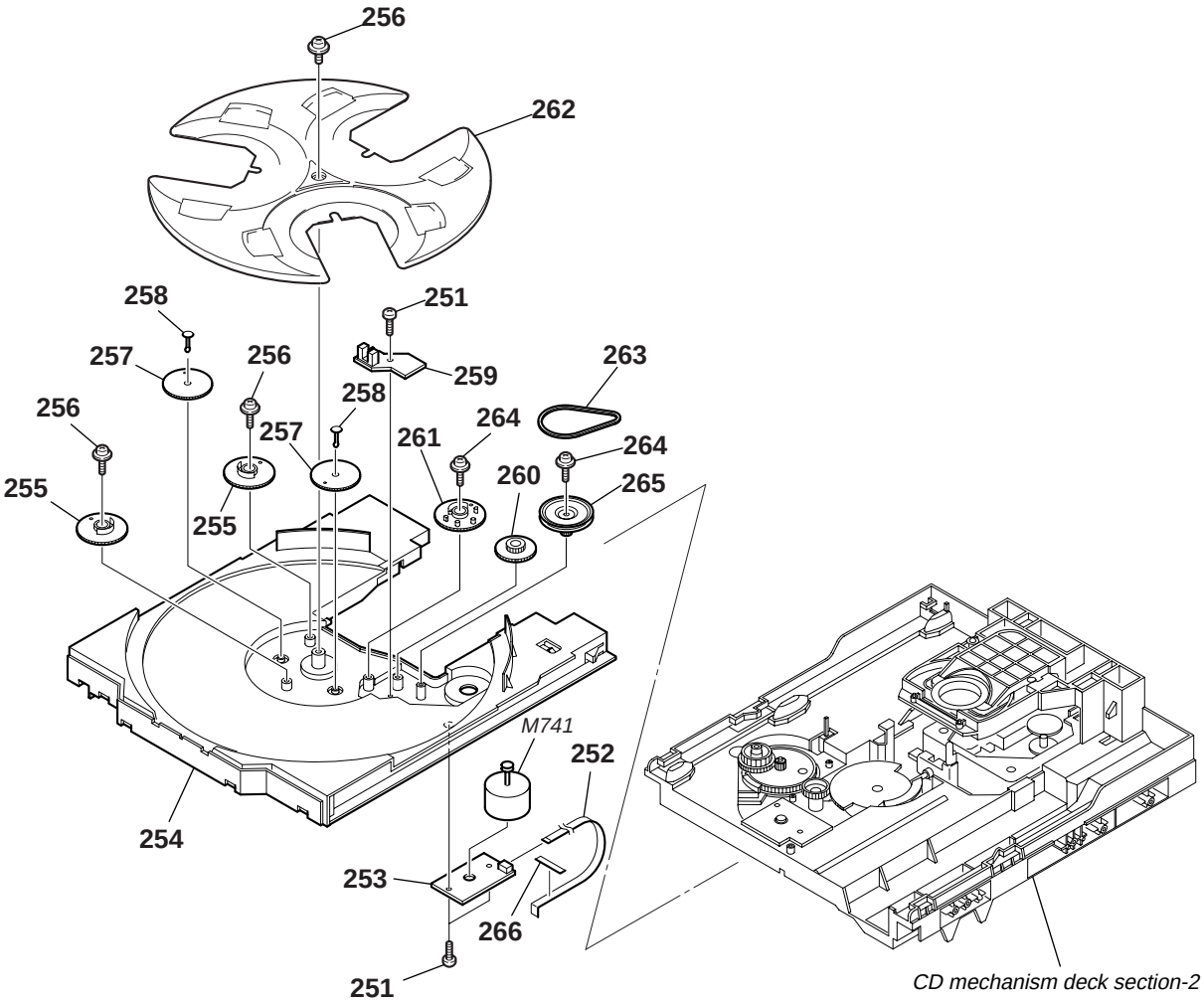

Ref. No.	Part No.	Description	Remark
251	4-218-253-21	SCREW (M2.6), +BTTP	
252	1-776-182-11	WIRE (FLAT TYPE) (5 CORE)	
253	1-687-134-12	MOTOR (TB) BOARD	
254	4-243-815-01	TABLE (LOADING)	
255	4-245-571-02	GEAR (STOPPER)	
256	4-218-252-61	SCREW (+PTPWH M2.6), FLOATING	
257	4-245-570-01	GEAR (JOINT)	
258	4-245-572-01	BUSHING (GEAR)	
259	1-687-132-12	SENSOR BOARD	
260	4-243-820-01	GEAR (TABLE)	
261	4-243-819-01	GEAR (GENEVA)	
262	4-243-816-01	TRAY	
263	4-243-823-01	BELT (TABLE)	
264	4-985-672-01	SCREW (+PTPWH M2.6), FLOATING	
265	4-243-821-01	PULLEY (TABLE)	
266	3-231-598-01	SHEET (BA)	
M741	A-4723-963-A	MOTOR ASSY, TABLE (TBL)	

6-7. CD MECHANISM SECTION (2) (CDM74-F1BD81)

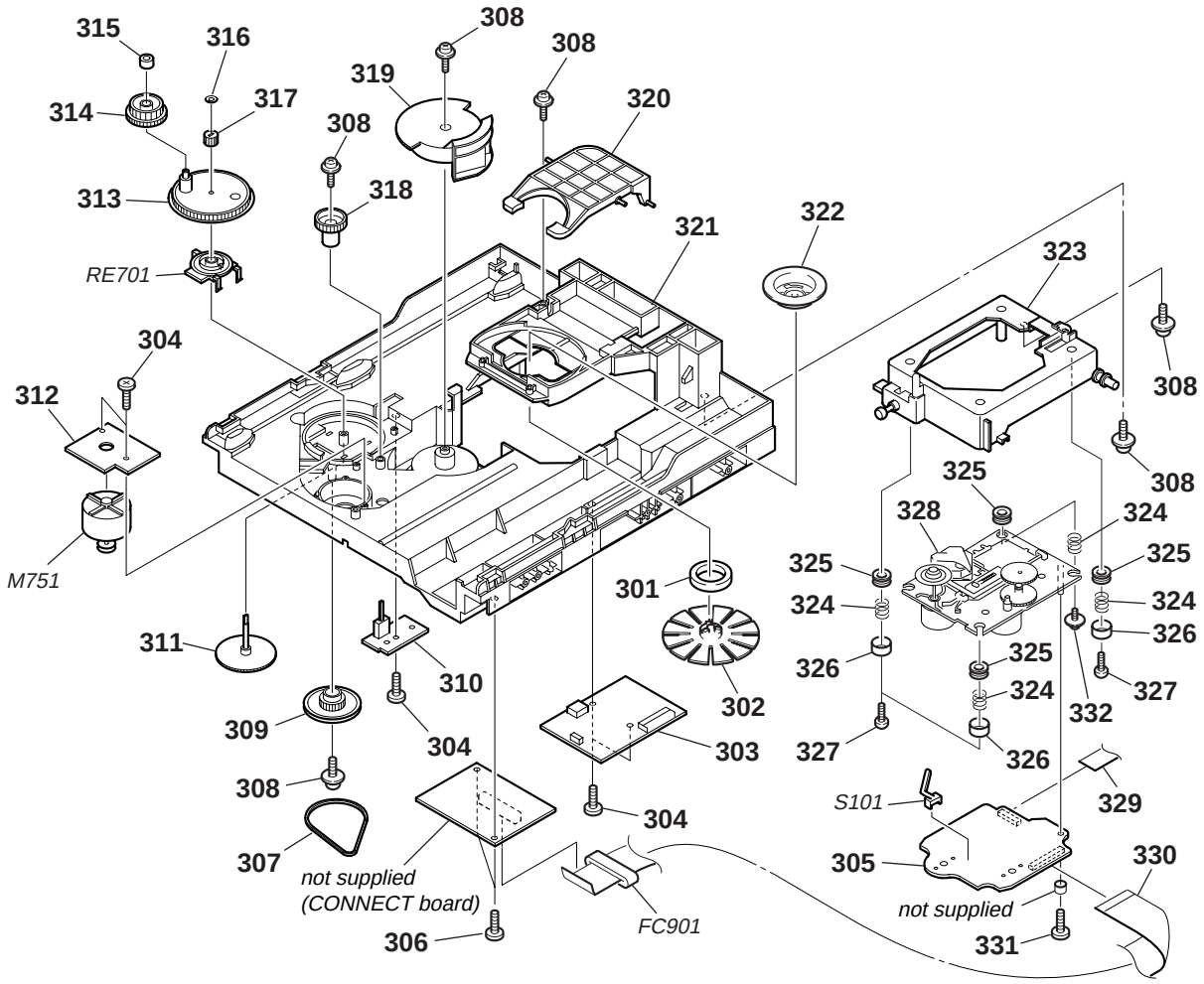

The components identified by mark ⚠ or dotted line with mark ⚠ are critical for safety. Replace only with part number specified.	Les composants identifiés par une marque ⚠ sont critiques pour la sécurité. Ne les remplacer que par une piéce portant le numéro spécifié.

Ref. No.	Part No.	Description	Remark
301	1-471-035-11	MAGNET ASSY	
302	X-4955-707-2	PULLEY (A5) ASSY, CHUCKING	
303	1-687-135-12	DRIVER BOARD	
304	4-218-253-31	+BTTP M2.6	
305	A-4751-431-A	BD81A BOARD, COMPLETE	
306	4-951-620-01	SCREW (2.6X8), +BVTP	
307	4-244-034-01	BELT (LOADING)	
308	4-218-252-61	SCREW (+PTPWH M2.6), FLOATING	
309	4-225-844-01	GEAR (LOADING A)	
310	1-687-669-12	SW BOARD	
311	4-224-613-01	GEAR (SHAFT)	
312	1-687-133-12	MOTOR (LD) BOARD	
313	4-244-108-01	GEAR, SWING	
314	4-224-609-01	GEAR (LOADING C)	
315	4-224-608-01	COLLAR, SWING	
316	3-016-533-11	WASHER (FR), STOPPER	
317	4-224-611-01	GEAR (LOADING B)	
318	4-224-606-01	GEAR (RV)	

Ref. No.	Part No.	Description	Remark
319	4-243-818-01	GEAR (U/D)	
320	4-243-822-02	LEVER (LIFTER)	
321	4-243-817-01	CHASSIS	
322	4-231-189-01	PULLEY (B), CHUCKING	
323	X-4955-536-1	HOLDER (213) ASSY	
324	4-227-045-31	SPRING (INSULATOR), COIL	
325	4-227-549-11	INSULATOR	
326	4-231-151-01	STOPPER (BU)	
327	4-218-253-31	+BTTP M2.6	
⚠328	8-820-244-01	OPTICAL PICK-UP (KSM-215DCP/C2RP)	
329	1-827-992-11	WIRE (FLAT TYPE) (16 CORE)	
330	1-775-251-11	WIRE (FLAT TYPE) (27 CORE)	
331	4-951-620-01	SCREW (2.6X8), +BVTP	
332	4-985-672-01	SCREW (+PTPWH M2.6), FLOATING	
FC901	1-469-854-11	CORE, FERRITE	
M751	A-4736-655-A	MOTOR ASSY, LOADING (LOADING)	
RE701	1-477-680-12	ENCODER, ROTARY	
S101	1-771-853-11	SWITCH, DETECTION (LIMIT)	

SECTION 7
ELECTRICAL PARTS LIST

AMP

NOTE:
- Due to standardization, replacements in the parts list may be different from the parts specified in the diagrams or the components used on the set.
- -XX and -X mean standardized parts, so they may have some difference from the original one.
- RESISTORS
  All resistors are in ohms.
  METAL:Metal-film resistor.
  METAL OXIDE: Metal oxide-film resistor.
  F:nonflammable
- Items marked "*" are not stocked since they are seldom required for routine service. Some delay should be anticipated when ordering these items.
- SEMICONDUCTORS
  In each case, u : µ, for example:
  uA.. : µA.. uPA.. : µPA..
  uPB.. : µPB.. uPC.. : µPC.. uPD.. : µPD..
- CAPACITORS
  uF : µF
- COILS
  uH : µH
- Abbreviation
  CND : Canadian model
  MX : Mexican model
  AR : Argentine model
  E2 : 120 V AC area in E model
  E3 : 240 V AC area in E model
  E51 : Chilean and Peruvian model

The components identified by mark ⚠ or dotted line with mark ⚠ are critical for safety.
Replace only with part number specified.

Les composants identifiés par une marque ⚠ sont critiques pour la sécurité.
Ne les remplacer que par une piéce portant le numéro spécifié.

When indicating parts by reference number, please include the board.

Ref. No.	Part No.	Description			Remark
	A-4751-535-A	AMP BOARD, COMPLETE (GX750)			
	A-4751-543-A	AMP BOARD, COMPLETE (RG551:E2,E3,E51)			
	A-4751-723-A	AMP BOARD, COMPLETE (RX550)			
	A-4752-178-A	AMP BOARD, COMPLETE (RG551:MX)			
	A-4752-188-A	AMP BOARD, COMPLETE (RG551:AR)			
		**********			
	7-685-872-09	SCREW +BVTT 3X8 (S)			
		< CAPACITOR >			
C402	1-162-306-11	CERAMIC	0.01uF	20%	16V
⚠C403	1-137-749-11	MYLAR	0.1uF		100V
⚠C404	1-137-749-11	MYLAR	0.1uF		100V
C405	1-127-812-11	ELECT	3300uF	20%	63V (RG551)
C405	1-135-517-11	ELECT	3300uF	20%	71V (GX750/RX550)
C406	1-127-812-11	ELECT	3300uF	20%	63V (RG551)
C406	1-135-517-11	ELECT	3300uF	20%	71V (GX750/RX550)
C407	1-162-306-11	CERAMIC	0.01uF	20%	16V (RG551)
C408	1-162-306-11	CERAMIC	0.01uF	20%	16V (RG551)
C409	1-135-515-11	ELECT	3300uF	20%	50V (GX750/RX550)
C410	1-135-515-11	ELECT	3300uF	20%	50V (GX750/RX550)
C411	1-162-306-11	CERAMIC	0.01uF	20%	16V (RG551)
C413	1-136-497-81	FILM	0.1uF	5%	50V (GX750/RX550)
C414	1-136-497-81	FILM	0.1uF	5%	50V (GX750/RX550)
C441	1-126-964-11	ELECT	10uF	20%	50V
C442	1-126-964-11	ELECT	10uF	20%	50V
C443	1-162-294-31	CERAMIC	0.001uF	10%	50V
C444	1-162-294-31	CERAMIC	0.001uF	10%	50V
C445	1-162-282-31	CERAMIC	100PF	10%	50V
C446	1-162-282-31	CERAMIC	100PF	10%	50V
C447	1-126-965-11	ELECT	22uF	20%	50V (RG551)
C447	1-126-967-11	ELECT	47uF	20%	50V (GX750/RX550)
C448	1-126-965-11	ELECT	22uF	20%	50V (RG551)
C448	1-126-967-11	ELECT	47uF	20%	50V (GX750/RX550)
C451	1-136-497-81	FILM	0.1uF	5%	50V
C452	1-136-497-81	FILM	0.1uF	5%	50V
C453	1-136-497-81	FILM	0.1uF	5%	50V
C454	1-136-497-81	FILM	0.1uF	5%	50V
C461	1-128-562-11	ELECT	47uF	20%	100V (GX750/RX550)
C462	1-128-562-11	ELECT	47uF	20%	100V (GX750/RX550)
C463	1-104-655-91	ELECT	470uF	20%	6.3V (GX750/RX550)
C481	1-104-658-91	ELECT	100uF	20%	10V
C486	1-126-961-11	ELECT	2.2uF	20%	50V
C487	1-126-963-11	ELECT	4.7uF	20%	50V
C488	1-126-965-11	ELECT	22uF	20%	50V (RG551)
C489	1-128-563-11	ELECT	100uF	20%	100V (RG551)
C492	1-162-306-11	CERAMIC	0.01uF	20%	16V (RG551)
C492	1-162-306-11	CERAMIC	0.01uF	20%	16V (GX750/RX550)
		< CONNECTOR >			
CN441	1-778-981-21	CONNECTOR, BOARD TO BOARD 13P			
		< DIODE >			
D401	6-500-360-01	DIODE D10XB20			
D402	6-500-360-01	DIODE D10XB20 (GX750/RX550)			
D441	8-719-991-33	DIODE 1SS133T-77			
D442	8-719-991-33	DIODE 1SS133T-77			
D443	8-719-991-33	DIODE 1SS133T-77			
D444	8-719-991-33	DIODE 1SS133T-77 (GX750/RX550)			
D445	8-719-947-70	DIODE MTZJ-T-72-18C (GX750/RX550)			
D446	8-719-947-70	DIODE MTZJ-T-72-18C (GX750/RX550)			
D481	8-719-991-33	DIODE 1SS133T-77			
D482	8-719-991-33	DIODE 1SS133T-77			
D483	8-719-991-33	DIODE 1SS133T-77 (RG551)			
		< EARTH TERMINAL >			
EP401	1-537-771-21	TERMINAL BOARD, GROUND			
EP402	1-537-771-21	TERMINAL BOARD, GROUND			
EP491	1-537-771-21	TERMINAL BOARD, GROUND			

AMP

Ref. No.	Part No.	Description	Remark
		< IC >	
IC441	6-600-169-01	IC STK412-240 (GX750/RX550)	
IC441	6-600-221-01	IC STK403-130 (RG551)	
		< TERMINAL BOARD >	
JK441	1-694-884-11	TERMINAL BOARD (4P) (SPEAKER)	
		< COIL >	
L441	1-422-009-13	COIL, AIR-CORE (GX750/RX550)	
L441	1-422-009-13	COIL, AIR-CORE (RG551)	
L442	1-422-009-13	COIL, AIR-CORE (GX750/RX550)	
L442	1-422-009-13	COIL, AIR-CORE (RG551)	
		< TRANSISTOR >	
Q441	8-729-140-84	TRANSISTOR 2SC1841-PAFAEA	
Q442	8-729-140-84	TRANSISTOR 2SC1841-PAFAEA	
Q481	8-729-119-79	TRANSISTOR 2SC2785-FEK	
Q482	8-729-119-79	TRANSISTOR 2SC2785-FEK	
Q483	8-729-119-79	TRANSISTOR 2SC2785-FEK	
Q484	8-729-119-79	TRANSISTOR 2SC2785-FEK	
Q485	8-729-119-76	TRANSISTOR 2SA1175-HFE	
Q486	8-729-119-79	TRANSISTOR 2SC2785-FEK	
Q487	8-729-119-79	TRANSISTOR 2SC2785-FEK	
Q488	8-729-142-46	TRANSISTOR 2SC2001-LK	
Q489	8-729-140-84	TRANSISTOR 2SC1841-PAFAEA	
Q490	8-729-140-84	TRANSISTOR 2SC1841-PAFAEA	(GX750/RX550)
Q491	8-729-821-00	TRANSISTOR 2SA1207 (GX750/RX550)	
		< RESISTOR >	
R401	1-247-879-91	CARBON 100K 5% 1/4W	
R402	1-247-879-91	CARBON 100K 5% 1/4W	
R403	1-247-879-91	CARBON 100K 5% 1/4W	(GX750/RX550)
R404	1-247-879-91	CARBON 100K 5% 1/4W	(GX750/RX550)
R407	1-260-316-51	CARBON 100 5% 1/2W	
R409	1-247-879-91	CARBON 100K 5% 1/4W	(GX750/RX550)
R410	1-247-879-91	CARBON 100K 5% 1/4W	(GX750/RX550)
R411	1-249-421-11	CARBON 2.2K 5% 1/4W	
R412	1-249-421-11	CARBON 2.2K 5% 1/4W	
R413	1-247-847-91	CARBON 4.7K 5% 1/4W	
R414	1-247-847-91	CARBON 4.7K 5% 1/4W	
R441	1-247-831-91	CARBON 1K 5% 1/4W	
R442	1-247-831-91	CARBON 1K 5% 1/4W	
R443	1-247-871-91	CARBON 47K 5% 1/4W	(RG551)
R443	1-247-873-91	CARBON 56K 5% 1/4W	(GX750/RX550)
R444	1-247-871-91	CARBON 47K 5% 1/4W	(RG551)
R444	1-247-873-91	CARBON 56K 5% 1/4W	(GX750/RX550)
R445	1-247-831-91	CARBON 1K 5% 1/4W	
R446	1-247-831-91	CARBON 1K 5% 1/4W	
R447	1-247-871-91	CARBON 47K 5% 1/4W	(RG551)
R447	1-247-873-91	CARBON 56K 5% 1/4W	(GX750/RX550)
R448	1-247-871-91	CARBON 47K 5% 1/4W	(RG551)
R448	1-247-873-91	CARBON 56K 5% 1/4W	(GX750/RX550)
⚠R449	1-217-156-00	METAL 0.22 10% 5W F	(GX750/RX550)
⚠R450	1-217-156-00	METAL 0.22 10% 5W F	(GX750/RX550)
⚠R451	1-217-156-00	METAL 0.22 10% 5W F	(RG551)
⚠R452	1-217-156-00	METAL 0.22 10% 5W F	(RG551)
R453	1-260-076-11	CARBON 10 5% 1/2W	
R454	1-260-076-11	CARBON 10 5% 1/2W	
R455	1-247-831-91	CARBON 1K 5% 1/4W	
R456	1-247-831-91	CARBON 1K 5% 1/4W	
R457	1-249-431-11	CARBON 15K 5% 1/4W	(GX750/RX550)
R457	1-247-863-91	CARBON 22K 5% 1/4W	(RG551)
R458	1-249-431-11	CARBON 15K 5% 1/4W	(GX750/RX550)
R458	1-247-863-91	CARBON 22K 5% 1/4W	(RG551)
R459	1-247-871-91	CARBON 47K 5% 1/4W	(RG551)
R459	1-247-879-91	CARBON 100K 5% 1/4W	(GX750/RX550)
R460	1-247-871-91	CARBON 47K 5% 1/4W	(RG551)
R460	1-247-879-91	CARBON 100K 5% 1/4W	(GX750/RX550)
R461	1-260-076-11	CARBON 10 5% 1/2W	
R462	1-260-076-11	CARBON 10 5% 1/2W	
R465	1-247-871-91	CARBON 47K 5% 1/4W	
R466	1-247-873-91	CARBON 56K 5% 1/4W	
⚠R467	1-215-872-11	METAL OXIDE 3.3K 5% 1W F	(GX750/RX550)
R467	1-249-435-11	CARBON 33K 5% 1/4W	(RG551)
⚠R468	1-215-872-11	METAL OXIDE 3.3K 5% 1W F	(GX750/RX550)
R469	1-249-435-11	CARBON 33K 5% 1/4W	(GX750/RX550)
R470	1-249-435-11	CARBON 33K 5% 1/4W	(GX750/RX550)
R471	1-249-439-11	CARBON 68K 5% 1/4W	(GX750/RX550)
R472	1-249-435-11	CARBON 33K 5% 1/4W	(GX750/RX550)
R473	1-247-863-91	CARBON 22K 5% 1/4W	(GX750/RX550)
R474	1-249-421-11	CARBON 2.2K 5% 1/4W	(GX750/RX550)
R475	1-249-429-11	CARBON 10K 5% 1/4W	(GX750/RX550)
R476	1-249-431-11	CARBON 15K 5% 1/4W	(GX750/RX550)
⚠R477	1-212-881-11	FUSIBLE 100 5% 1/4W F	(GX750/RX550)

The components identified by mark ⚠ or dotted line with mark ⚠ are critical for safety. Replace only with part number specified.	Les composants identifiés par une marque ⚠ sont critiques pour la sécurité. Ne les remplacer que par une piéce portant le numéro spécifié.

Ref. No.	Part No.	Description			Remark
R478	1-249-429-11	CARBON	10K	5%	1/4W (GX750/RX550)
R481	1-247-847-91	CARBON	4.7K	5%	1/4W
R482	1-249-429-11	CARBON	10K	5%	1/4W
R483	1-247-791-91	CARBON	22	5%	1/4W
R484	1-247-873-91	CARBON	56K	5%	1/4W
R485	1-247-879-91	CARBON	100K	5%	1/4W
R486	1-247-879-91	CARBON	100K	5%	1/4W
R487	1-249-435-11	CARBON	33K	5%	1/4W
R488	1-247-863-91	CARBON	22K	5%	1/4W
R489	1-247-847-91	CARBON	4.7K	5%	1/4W
R490	1-247-847-91	CARBON	4.7K	5%	1/4W
R491	1-247-863-91	CARBON	22K	5%	1/4W (RG551)
R492	1-247-831-91	CARBON	1K	5%	1/4W (RG551)
R493	1-249-435-11	CARBON	33K	5%	1/4W (RG551)
R494	1-249-421-11	CARBON	2.2K	5%	1/4W (RG551)
⚠R495	1-202-972-61	FUSIBLE	1	5%	1/4W F
⚠R496	1-212-881-11	FUSIBLE	100	5%	1/4W F
		< RELAY >			
RY441	1-755-372-11	RELAY (GX750/RX550)			
RY441	1-755-373-11	RELAY (RG551)			
		< THERMISTOR >			
TH441	1-807-796-11	THERMISTOR			

****

	A-4751-431-A	BD81A BOARD, COMPLETE			
		**********			
		< CAPACITOR >			
C10	1-165-989-11	CERAMIC CHIP	10uF	10%	6.3V
C11	1-165-989-11	CERAMIC CHIP	10uF	10%	6.3V
C14	1-164-360-11	CERAMIC CHIP	0.1uF		16V
C15	1-164-360-11	CERAMIC CHIP	0.1uF		16V
C16	1-115-156-11	CERAMIC CHIP	1uF		10V
C17	1-126-246-11	ELECT CHIP	220uF	20%	4V
C18	1-162-964-11	CERAMIC CHIP	0.001uF	10%	50V
C111	1-162-967-11	CERAMIC CHIP	0.0033uF	10%	50V
C112	1-164-315-11	CERAMIC CHIP	470PF	5%	50V
C113	1-162-967-11	CERAMIC CHIP	0.0033uF	10%	50V
C114	1-164-315-11	CERAMIC CHIP	470PF	5%	50V
C115	1-164-360-11	CERAMIC CHIP	0.1uF		16V
C116	1-128-995-21	ELECT CHIP	100uF	20%	10V
C122	1-107-826-11	CERAMIC CHIP	0.1uF	10%	16V
C123	1-107-826-11	CERAMIC CHIP	0.1uF	10%	16V
C124	1-162-959-11	CERAMIC CHIP	330PF	5%	50V
C125	1-164-360-11	CERAMIC CHIP	0.1uF		16V
C131	1-162-927-11	CERAMIC CHIP	100PF	5%	50V
C132	1-117-863-11	CERAMIC CHIP	0.47uF	10%	6.3V
C133	1-162-970-11	CERAMIC CHIP	0.01uF	10%	25V
C134	1-164-360-11	CERAMIC CHIP	0.1uF		16V
C141	1-107-826-11	CERAMIC CHIP	0.1uF	10%	16V
C142	1-162-965-11	CERAMIC CHIP	0.0015uF	10%	50V
C143	1-164-360-11	CERAMIC CHIP	0.1uF		16V
C151	1-128-995-21	ELECT CHIP	100uF	20%	10V
C161	1-164-360-11	CERAMIC CHIP	0.1uF		16V
C162	1-164-360-11	CERAMIC CHIP	0.1uF		16V
C163	1-164-360-11	CERAMIC CHIP	0.1uF		16V
C171	1-162-919-11	CERAMIC CHIP	22PF	5%	50V
C172	1-162-920-11	CERAMIC CHIP	27PF	5%	50V
C174	1-164-360-11	CERAMIC CHIP	0.1uF		16V
C181	1-164-360-11	CERAMIC CHIP	0.1uF		16V
C182	1-164-360-11	CERAMIC CHIP	0.1uF		16V
C183	1-124-778-00	ELECT CHIP	22uF	20%	6.3V
C184	1-124-778-00	ELECT CHIP	22uF	20%	6.3V
C185	1-164-315-11	CERAMIC CHIP	470PF	5%	50V
C186	1-164-315-11	CERAMIC CHIP	470PF	5%	50V
C194	1-164-360-11	CERAMIC CHIP	0.1uF		16V
C195	1-164-360-11	CERAMIC CHIP	0.1uF		16V
C196	1-164-360-11	CERAMIC CHIP	0.1uF		16V
C201	1-128-995-21	ELECT CHIP	100uF	20%	10V
C203	1-128-995-21	ELECT CHIP	100uF	20%	10V
C209	1-162-970-11	CERAMIC CHIP	0.01uF	10%	25V
C210	1-107-826-11	CERAMIC CHIP	0.1uF	10%	16V
C211	1-164-230-11	CERAMIC CHIP	220PF	5%	50V
C212	1-162-919-11	CERAMIC CHIP	22PF	5%	50V
C213	1-162-919-11	CERAMIC CHIP	22PF	5%	50V
C251	1-162-969-11	CERAMIC CHIP	0.0068uF	10%	25V
C252	1-164-360-11	CERAMIC CHIP	0.1uF		16V
C255	1-164-360-11	CERAMIC CHIP	0.1uF		16V
C257	1-164-360-11	CERAMIC CHIP	0.1uF		16V
C258	1-164-360-11	CERAMIC CHIP	0.1uF		16V
C259	1-164-360-11	CERAMIC CHIP	0.1uF		16V
C260	1-128-394-11	ELECT CHIP	220uF	20%	10V
C302	1-164-360-11	CERAMIC CHIP	0.1uF		16V
C303	1-164-360-11	CERAMIC CHIP	0.1uF		16V
C305	1-126-246-11	ELECT CHIP	220uF	20%	4V
C306	1-164-360-11	CERAMIC CHIP	0.1uF		16V
C307	1-164-360-11	CERAMIC CHIP	0.1uF		16V
C308	1-126-208-21	ELECT CHIP	47uF	20%	4V
C309	1-164-360-11	CERAMIC CHIP	0.1uF		16V
C310	1-164-360-11	CERAMIC CHIP	0.1uF		16V
C311	1-164-360-11	CERAMIC CHIP	0.1uF		16V
C312	1-164-360-11	CERAMIC CHIP	0.1uF		16V
C313	1-164-360-11	CERAMIC CHIP	0.1uF		16V
C314	1-126-208-21	ELECT CHIP	47uF	20%	4V
C315	1-107-826-11	CERAMIC CHIP	0.1uF	10%	16V
C316	1-162-966-11	CERAMIC CHIP	0.0022uF	10%	50V
C317	1-162-970-11	CERAMIC CHIP	0.01uF	10%	25V
C318	1-162-970-11	CERAMIC CHIP	0.01uF	10%	25V
C320	1-216-864-11	SHORT CHIP	0		
		< CONNECTOR >			
CN101	1-770-425-11	CONNECTOR, FFC/FPC 16P			
CN201	1-818-350-11	CONNECTOR (FFC) 27P			
		< FERRITE BEAD >			
FB301	1-500-445-21	FERRITE, EMI (SMD) (2012)			
		< IC >			
IC101	8-752-425-12	IC CXD3059AR			

The components identified by mark ⚠ or dotted line with mark ⚠ are critical for safety. Replace only with part number specified.	Les composants identifiés par une marque ⚠ sont critiques pour la sécurité. Ne les remplacer que par une piéce portant le numéro spécifié.

BD81A **CONNECT** **DRIVER**

Ref. No.	Part No.	Description			Remark
IC251	6-705-808-01	IC BA5947FM			
IC301	6-705-365-01	IC TC94A34FG-002			
IC303	6-705-807-01	IC BH15FB1WG			
		< TRANSISTOR >			
Q10	6-550-363-01	TRANSISTOR 2SB1690KT146			
		< RESISTOR >			
R10	1-216-791-11	METAL CHIP	3.3	5%	1/10W
R11	1-216-864-11	SHORT CHIP	0		
R12	1-216-845-11	METAL CHIP	100K	5%	1/10W
R13	1-218-446-11	METAL CHIP	1	5%	1/10W
R111	1-216-821-11	METAL CHIP	1K	5%	1/10W
R112	1-216-835-11	METAL CHIP	15K	5%	1/10W
R113	1-216-821-11	METAL CHIP	1K	5%	1/10W
R114	1-216-835-11	METAL CHIP	15K	5%	1/10W
R121	1-216-835-11	METAL CHIP	15K	5%	1/10W
R131	1-216-857-11	METAL CHIP	1M	5%	1/10W
R132	1-216-833-11	METAL CHIP	10K	5%	1/10W
R133	1-216-848-11	METAL CHIP	180K	5%	1/10W
R141	1-216-829-11	METAL CHIP	4.7K	5%	1/10W
R142	1-216-821-11	METAL CHIP	1K	5%	1/10W
R143	1-216-827-11	METAL CHIP	3.3K	5%	1/10W
R151	1-216-864-11	SHORT CHIP	0		
R161	1-216-809-11	METAL CHIP	100	5%	1/10W
R162	1-216-841-11	METAL CHIP	47K	5%	1/10W
R163	1-216-809-11	METAL CHIP	100	5%	1/10W
R165	1-216-864-11	SHORT CHIP	0		
R171	1-216-817-11	METAL CHIP	470	5%	1/10W
R172	1-216-857-11	METAL CHIP	1M	5%	1/10W
R173	1-216-295-91	SHORT CHIP	0		
R181	1-216-809-11	METAL CHIP	100	5%	1/10W
R182	1-216-809-11	METAL CHIP	100	5%	1/10W
R191	1-216-864-11	SHORT CHIP	0		
R201	1-500-445-21	FERRITE, EMI (SMD) (2012)			
R203	1-216-864-11	SHORT CHIP	0		
R204	1-500-445-21	FERRITE, EMI (SMD) (2012)			
R205	1-216-864-11	SHORT CHIP	0		
R251	1-216-833-11	METAL CHIP	10K	5%	1/10W
R252	1-216-837-11	METAL CHIP	22K	5%	1/10W
R253	1-216-833-11	METAL CHIP	10K	5%	1/10W
R301	1-216-845-11	METAL CHIP	100K	5%	1/10W
R302	1-216-833-11	METAL CHIP	10K	5%	1/10W
R303	1-216-845-11	METAL CHIP	100K	5%	1/10W
R305	1-216-845-11	METAL CHIP	100K	5%	1/10W
R306	1-216-864-11	SHORT CHIP	0		
R307	1-216-833-11	METAL CHIP	10K	5%	1/10W
R313	1-216-813-11	METAL CHIP	220	5%	1/10W
R351	1-216-809-11	METAL CHIP	100	5%	1/10W
R352	1-216-809-11	METAL CHIP	100	5%	1/10W
R353	1-216-809-11	METAL CHIP	100	5%	1/10W
R354	1-216-809-11	METAL CHIP	100	5%	1/10W
R401	1-216-809-11	METAL CHIP	100	5%	1/10W
R402	1-216-809-11	METAL CHIP	100	5%	1/10W
R403	1-216-809-11	METAL CHIP	100	5%	1/10W
R404	1-216-809-11	METAL CHIP	100	5%	1/10W
R405	1-216-809-11	METAL CHIP	100	5%	1/10W
R406	1-216-809-11	METAL CHIP	100	5%	1/10W
R407	1-216-809-11	METAL CHIP	100	5%	1/10W
R408	1-216-809-11	METAL CHIP	100	5%	1/10W
R409	1-216-809-11	METAL CHIP	100	5%	1/10W
R410	1-216-809-11	METAL CHIP	100	5%	1/10W
R411	1-216-809-11	METAL CHIP	100	5%	1/10W
R412	1-216-809-11	METAL CHIP	100	5%	1/10W
R419	1-216-809-11	METAL CHIP	100	5%	1/10W
		< VIBRATOR >			
X171	1-767-408-21	VIBRATOR, CRYSTAL (16.9344MHz)			
**********					
		CONNECT BOARD			
		**********			
		< CAPACITOR >			
C871	1-162-927-11	CERAMIC CHIP	100PF	5%	50V
C872	1-162-970-11	CERAMIC CHIP	0.01uF	10%	25V
C873	1-162-927-11	CERAMIC CHIP	100PF	5%	50V
C874	1-164-315-11	CERAMIC CHIP	470PF	5%	50V
C875	1-164-156-11	CERAMIC CHIP	0.1uF		25V
C876	1-164-156-11	CERAMIC CHIP	0.1uF		25V
		< CONNECTOR >			
CN871	1-779-295-11	CONNECTOR, FFC (LIF(NON-ZIF)) 27P			
CN873	1-784-778-11	CONNECTOR, FFC 17P			
* CN874	1-564-725-11	PIN, CONNECTOR (SMALL TYPE) 9P			
		< JUMPER RESISTOR >			
FB871	1-216-864-11	SHORT CHIP	0		
FB872	1-216-864-11	SHORT CHIP	0		
JR871	1-216-864-11	SHORT CHIP	0		
JR872	1-216-864-11	SHORT CHIP	0		
**********					
	1-687-135-12	DRIVER BOARD			
		**********			
		< CAPACITOR >			
C715	1-126-933-11	ELECT	100uF	20%	16V
C731	1-126-964-11	ELECT	10uF	20%	50V
C735	1-164-159-21	CERAMIC	0.1uF		50V
C736	1-164-159-21	CERAMIC	0.1uF		50V
C737	1-164-159-21	CERAMIC	0.1uF		50V
C741	1-162-306-11	CERAMIC	0.01uF	20%	16V
C751	1-162-306-11	CERAMIC	0.01uF	20%	16V
C752	1-164-159-21	CERAMIC	0.1uF		50V
		< CONNECTOR >			
CN701	1-785-338-11	PIN, CONNECTOR (LIGHT ANGLE) 12P			
CN702	1-784-766-11	CONNECTOR, FFC 5P			
* CN703	1-564-720-11	PIN, CONNECTOR (SMALL TYPE) 4P			
CN704	1-785-328-11	PIN, CONNECTOR (LIGHT ANGLE) 2P			
		< DIODE >			
D701	8-719-921-42	DIODE MTZJ-5.1A			
D711	8-719-109-69	DIODE RD3.6ESB2			

DRIVER | GAME JACK | H/P JACK | MAIN

Ref. No.	Part No.	Description			Remark
		< IC >			
IC701	8-759-598-69	IC BA6956AN			
IC712	8-759-598-69	IC BA6956AN			
		< TRANSISTOR >			
Q731	8-729-029-66	TRANSISTOR DTC114ESA			
		< RESISTOR >			
R701	1-249-413-11	CARBON	470	5%	1/4W
R702	1-247-807-31	CARBON	100	5%	1/4W
R711	1-249-417-11	CARBON	1K	5%	1/4W
R712	1-249-425-11	CARBON	4.7K	5%	1/4W
R713	1-249-433-11	CARBON	22K	5%	1/4W
R721	1-249-425-11	CARBON	4.7K	5%	1/4W
R722	1-249-425-11	CARBON	4.7K	5%	1/4W
R723	1-249-425-11	CARBON	4.7K	5%	1/4W
R731	1-247-807-31	CARBON	100	5%	1/4W
R732	1-249-429-11	CARBON	10K	5%	1/4W
R733	1-249-417-11	CARBON	1K	5%	1/4W
R734	1-249-430-11	CARBON	12K	5%	1/4W
R735	1-247-807-31	CARBON	100	5%	1/4W
R751	1-249-425-11	CARBON	4.7K	5%	1/4W

****

GAME JACK BOARD
****

Ref. No.	Part No.	Description			Remark
		< CAPACITOR >			
C801	1-162-962-11	CERAMIC CHIP	470PF	10%	50V
C802	1-162-962-11	CERAMIC CHIP	470PF	10%	50V
C803	1-165-128-11	CERAMIC CHIP	0.22uF		16V
C804	1-165-128-11	CERAMIC CHIP	0.22uF		16V
		< JACK >			
J804	1-815-684-11	JACK, PIN 3P (VIDEO,AUDIO L/R)			
		< JUMPER RESISTOR >			
JR801	1-216-864-11	SHORT CHIP	0		
		< RESISTOR >			
R801	1-216-833-11	METAL CHIP	10K	5%	1/10W
R802	1-216-833-11	METAL CHIP	10K	5%	1/10W
R803	1-216-837-11	METAL CHIP	22K	5%	1/10W
R804	1-216-837-11	METAL CHIP	22K	5%	1/10W

****

H/P JACK BOARD
****

Ref. No.	Part No.	Description			Remark
		< CAPACITOR >			
C830	1-162-964-11	CERAMIC CHIP	0.001uF	10%	50V
C831	1-162-964-11	CERAMIC CHIP	0.001uF	10%	50V
C832	1-164-156-11	CERAMIC CHIP	0.1uF		25V
		< JACK >			
J801	1-793-829-11	JACK, HEADPHONE (PHONES)			

****

Ref. No.	Part No.	Description			Remark
	A-4752-167-A	MAIN BOARD, COMPLETE			
		**********			
	7-685-872-09	SCREW +BVTT 3X8 (S)			
		< CAPACITOR >			
C101	1-126-960-11	ELECT	1uF	20%	50V
C102	1-126-960-11	ELECT	1uF	20%	50V
C103	1-126-956-91	ELECT	0.1uF	20%	50V
C104	1-126-956-91	ELECT	0.1uF	20%	50V
C105	1-164-816-11	CERAMIC CHIP	220PF	2%	50V
C106	1-131-679-31	FILM	0.01uF	5%	50V
C107	1-126-964-11	ELECT	10uF	20%	50V
C108	1-164-816-11	CERAMIC CHIP	220PF	2%	50V
C109	1-131-679-31	FILM	0.01uF	5%	50V
C110	1-126-964-11	ELECT	10uF	20%	50V
C111	1-126-960-11	ELECT	1uF	20%	50V
C112	1-126-960-11	ELECT	1uF	20%	50V
C113	1-126-960-11	ELECT	1uF	20%	50V
C114	1-126-960-11	ELECT	1uF	20%	50V
C115	1-131-679-31	FILM	0.01uF	5%	50V
C116	1-164-816-11	CERAMIC CHIP	220PF	2%	50V
C117	1-164-816-11	CERAMIC CHIP	220PF	2%	50V
C118	1-126-964-11	ELECT	10uF	20%	50V
C119	1-131-679-31	FILM	0.01uF	5%	50V
C120	1-164-816-11	CERAMIC CHIP	220PF	2%	50V
C121	1-164-816-11	CERAMIC CHIP	220PF	2%	50V
C122	1-126-964-11	ELECT	10uF	20%	50V
C123	1-126-965-91	ELECT	22uF	20%	50V
C124	1-162-953-11	CERAMIC CHIP	100PF	5%	50V
C125	1-162-953-11	CERAMIC CHIP	100PF	5%	50V
C126	1-165-112-11	CERAMIC CHIP	0.33uF	10%	16V
C127	1-104-658-91	ELECT	100uF	20%	10V
C128	1-104-658-91	ELECT	100uF	20%	10V
C129	1-126-947-11	ELECT	47uF	20%	35V
C130	1-126-947-11	ELECT	47uF	20%	35V
C131	1-131-688-31	FILM	0.047uF	5%	50V
C132	1-126-947-11	ELECT	47uF	20%	35V
C133	1-131-688-31	FILM	0.047uF	5%	50V
C134	1-136-165-00	FILM	0.1uF	5%	50V
C135	1-131-693-31	FILM	0.12uF	5%	50V
C136	1-131-693-31	FILM	0.12uF	5%	50V
C137	1-126-964-11	ELECT	10uF	20%	50V
C138	1-126-964-11	ELECT	10uF	20%	50V
C139	1-131-693-31	FILM	0.12uF	5%	50V
C140	1-131-693-31	FILM	0.12uF	5%	50V
C141	1-126-964-11	ELECT	10uF	20%	50V
C142	1-126-964-11	ELECT	10uF	20%	50V
C143	1-126-960-11	ELECT	1uF	20%	50V
C144	1-136-165-00	FILM	0.1uF	5%	50V
C145	1-126-964-11	ELECT	10uF	20%	50V
C146	1-136-165-00	FILM	0.1uF	5%	50V
C147	1-126-964-11	ELECT	10uF	20%	50V
C148	1-131-679-31	FILM	0.01uF	5%	50V
C149	1-131-679-31	FILM	0.01uF	5%	50V
C150	1-131-679-31	FILM	0.01uF	5%	50V
C151	1-131-679-31	FILM	0.01uF	5%	50V
C152	1-130-475-00	MYLAR	0.0022uF	5%	50V

MAIN

Ref. No.	Part No.	Description			Remark
C153	1-130-475-00	MYLAR	0.0022uF	5%	50V
C154	1-131-700-31	FILM	0.47uF	5%	50V
C157	1-126-960-11	ELECT	1uF	20%	50V
C159	1-126-960-11	ELECT	1uF	20%	50V
C160	1-126-960-11	ELECT	1uF	20%	50V
C162	1-126-960-11	ELECT	1uF	20%	50V
C164	1-126-960-11	ELECT	1uF	20%	50V
C165	1-126-960-11	ELECT	1uF	20%	50V
C166	1-126-960-11	ELECT	1uF	20%	50V
C175	1-109-953-11	ELECT	2.2uF	20%	50V
C176	1-126-964-11	ELECT	10uF	20%	50V
C177	1-162-945-11	CERAMIC CHIP	22PF	5%	50V
C178	1-126-947-11	ELECT	47uF	20%	35V
C179	1-162-949-11	CERAMIC CHIP	47PF	5%	50V
C181	1-162-949-11	CERAMIC CHIP	47PF	5%	50V
C183	1-162-945-11	CERAMIC CHIP	22PF	5%	50V
C184	1-126-947-11	ELECT	47uF	20%	35V
C185	1-126-964-11	ELECT	10uF	20%	50V
C186	1-126-947-11	ELECT	47uF	20%	35V
C187	1-162-974-11	CERAMIC CHIP	0.01uF		50V
C188	1-126-965-91	ELECT	22uF	20%	50V
C189	1-126-965-91	ELECT	22uF	20%	50V
C190	1-162-974-11	CERAMIC CHIP	0.01uF		50V
C191	1-126-961-11	ELECT	2.2uF	20%	50V
C192	1-126-961-11	ELECT	2.2uF	20%	50V
C193	1-162-966-11	CERAMIC CHIP	0.0022uF	10%	50V
C194	1-126-964-11	ELECT	10uF	20%	50V
C196	1-126-947-11	ELECT	47uF	20%	35V
C198	1-131-696-11	FILM	0.22uF	5%	50V
C199	1-131-698-31	FILM	0.33uF	5%	50V
C202	1-126-933-11	ELECT	100uF	20%	16V
C203	1-126-964-11	ELECT	10uF	20%	50V
C206	1-162-966-11	CERAMIC CHIP	0.0022uF	10%	50V
C211	1-109-953-11	ELECT	2.2uF	20%	50V
C212	1-126-964-11	ELECT	10uF	20%	50V
C213	1-126-964-11	ELECT	10uF	20%	50V
C214	1-126-926-11	ELECT	1000uF	20%	10V
C216	1-164-156-11	CERAMIC CHIP	0.1uF		25V
C217	1-164-156-11	CERAMIC CHIP	0.1uF		25V
C222	1-164-156-11	CERAMIC CHIP	0.1uF		25V
C228	1-164-156-11	CERAMIC CHIP	0.1uF		25V
C229	1-126-963-11	ELECT	4.7uF	20%	50V
C230	1-126-947-11	ELECT	47uF	20%	35V
C235	1-164-156-11	CERAMIC CHIP	0.1uF		25V
C241	1-162-964-11	CERAMIC CHIP	0.001uF	10%	50V
C242	1-130-479-00	MYLAR	0.0047uF	5%	50V
C243	1-131-681-31	FILM	0.015uF	5%	50V
C244	1-131-681-31	FILM	0.015uF	5%	50V
C246	1-131-681-31	FILM	0.015uF	5%	50V
C248	1-162-964-11	CERAMIC CHIP	0.001uF	10%	50V
C249	1-126-964-11	ELECT	10uF	20%	50V
C250	1-126-947-11	ELECT	47uF	20%	35V
C251	1-126-947-11	ELECT	47uF	20%	35V
C252	1-126-933-11	ELECT	100uF	20%	16V
C253	1-126-956-91	ELECT	0.1uF	20%	50V
C258	1-126-959-11	ELECT	0.47uF	20%	50V
C259	1-126-957-11	ELECT	0.22uF	20%	50V
C264	1-162-971-11	CERAMIC CHIP	0.001uF	10%	50V
C265	1-162-971-11	CERAMIC CHIP	0.001uF	10%	50V
C266	1-162-971-11	CERAMIC CHIP	0.001uF	10%	50V
C267	1-162-971-11	CERAMIC CHIP	0.001uF	10%	50V
C270	1-126-964-11	ELECT	10uF	20%	50V
C274	1-162-949-11	CERAMIC CHIP	47PF	5%	50V
C275	1-162-949-11	CERAMIC CHIP	47PF	5%	50V
C301	1-136-165-00	FILM	0.1uF	5%	50V
C302	1-136-165-00	FILM	0.1uF	5%	50V
C303	1-136-165-00	FILM	0.1uF	5%	50V
C304	1-136-165-00	FILM	0.1uF	5%	50V
C305	1-136-165-00	FILM	0.1uF	5%	50V
C306	1-136-165-00	FILM	0.1uF	5%	50V
C308	1-126-965-91	ELECT	22uF	20%	50V
C309	1-126-965-91	ELECT	22uF	20%	50V
C310	1-126-936-11	ELECT	3300uF	20%	16V
C311	1-126-964-11	ELECT	10uF	20%	50V
C312	1-126-964-11	ELECT	10uF	20%	50V
C313	1-126-943-11	ELECT	2200uF	20%	25V
C315	1-126-933-11	ELECT	100uF	20%	16V
C316	1-126-943-11	ELECT	2200uF	20%	25V
C318	1-126-933-11	ELECT	100uF	20%	16V
C321	1-126-961-11	ELECT	2.2uF	20%	50V
C342	1-164-156-11	CERAMIC CHIP	0.1uF		25V
C351	1-164-357-11	CERAMIC CHIP	0.001uF	5%	50V
C352	1-126-965-91	ELECT	22uF	20%	50V
C353	1-126-961-11	ELECT	2.2uF	20%	50V
C354	1-164-156-11	CERAMIC CHIP	0.1uF		25V
C371	1-164-362-11	CERAMIC CHIP	470PF	5%	50V
C372	1-162-953-11	CERAMIC CHIP	100PF	5%	50V
C373	1-162-953-11	CERAMIC CHIP	100PF	5%	50V
C374	1-126-947-11	ELECT	47uF	20%	35V
C375	1-164-156-11	CERAMIC CHIP	0.1uF		25V
C376	1-126-961-11	ELECT	2.2uF	20%	50V
		< CONNECTOR >			
CN101	1-568-830-11	CONNECTOR, FFC 11P			
* CN103	1-564-710-11	PIN, CONNECTOR (SMALL TYPE) 8P			
* CN112	1-564-705-11	PIN, CONNECTOR (SMALL TYPE) 3P			
CN302	1-568-844-11	CONNECTOR, FFC 29P			
CN307	1-778-982-21	CONNECTOR, BOARD TO BOARD 13P			
CN308	1-564-506-11	PLUG, CONNECTOR 3P			
CN309	1-564-707-11	PIN, CONNECTOR (SMALL TYPE) 5P			
CN314	1-564-506-11	PLUG, CONNECTOR 3P			
		< DIODE >			
D201	8-719-988-61	DIODE 1SS355TE-17			
D202	8-719-083-63	DIODE UDZSTE-1713B			
D206	8-719-988-61	DIODE 1SS355TE-17			
D207	8-719-988-61	DIODE 1SS355TE-17			
D211	8-719-988-61	DIODE 1SS355TE-17			
D212	8-719-988-61	DIODE 1SS355TE-17			
D213	8-719-988-61	DIODE 1SS355TE-17			
D214	8-719-988-61	DIODE 1SS355TE-17			
D215	8-719-988-61	DIODE 1SS355TE-17			
D301	6-500-522-21	DIODE 10EDB40-TB3			
D302	6-500-522-21	DIODE 10EDB40-TB3			
D303	6-500-522-21	DIODE 10EDB40-TB3			
D304	6-500-522-21	DIODE 10EDB40-TB3			

Ref. No.	Part No.	Description	Remark
D305	6-500-522-21	DIODE 10EDB40-TB3	
D306	6-500-522-21	DIODE 10EDB40-TB3	
D307	6-500-522-21	DIODE 10EDB40-TB3	
D308	6-500-522-21	DIODE 10EDB40-TB3	
D309	6-500-522-21	DIODE 10EDB40-TB3	
D310	6-500-522-21	DIODE 10EDB40-TB3	
D311	6-500-522-21	DIODE 10EDB40-TB3	
D312	6-500-522-21	DIODE 10EDB40-TB3	
D313	8-719-085-36	DIODE 11EQS04-TB5	
D316	8-719-988-61	DIODE 1SS355TE-17	
D321	8-719-988-61	DIODE 1SS355TE-17	
D322	8-719-988-61	DIODE 1SS355TE-17	
D324	6-500-522-21	DIODE 10EDB40-TB3	
D325	6-500-522-21	DIODE 10EDB40-TB3	
D326	6-500-522-21	DIODE 10EDB40-TB3	
		< TERMINAL BOARD >	
EP101	1-537-771-21	TERMINAL BOARD, GROUND	
EP301	1-537-771-21	TERMINAL BOARD, GROUND	
		< JUMPER RESISTOR >	
FB201	1-216-864-11	SHORT CHIP 0	
FB202	1-216-864-11	SHORT CHIP 0	
FB203	1-216-864-11	SHORT CHIP 0	
FB204	1-216-864-11	SHORT CHIP 0	
FB205	1-216-864-11	SHORT CHIP 0	
		< IC >	
IC101	6-705-852-01	IC BD3401KS2	
IC102	8-759-710-97	IC NJM4565M-D	
IC104	8-759-710-97	IC NJM4565M-D	
IC201	8-759-508-69	IC BA3126N	
IC301	6-702-771-01	IC TA78033LS	
IC302	6-702-771-01	IC TA78033LS	
IC303	8-759-701-59	IC NJM78M09FA	
IC304	8-759-701-59	IC NJM78M09FA	
IC371	6-704-046-01	IC BU2099FV	
		< COIL >	
L101	1-424-849-11	COIL, OSCILLATION (BIAS)	
		< TRANSISTOR >	
Q101	8-729-120-28	TRANSISTOR 2SC1623-L5L6	
Q102	6-550-580-01	TRANSISTOR 2SA1235TP-1F	
Q103	6-550-889-01	TRANSISTOR 2SC5938-T112-1B	
Q104	6-550-889-01	TRANSISTOR 2SC5938-T112-1B	
Q105	8-729-120-28	TRANSISTOR 2SC1623-L5L6	
Q106	8-729-120-28	TRANSISTOR 2SC1623-L5L6	
Q107	8-729-120-28	TRANSISTOR 2SC1623-L5L6	
Q108	8-729-120-28	TRANSISTOR 2SC1623-L5L6	
Q303	8-729-120-28	TRANSISTOR 2SC1623-L5L6	
Q304	8-729-120-28	TRANSISTOR 2SC1623-L5L6	
Q305	6-550-580-01	TRANSISTOR 2SA1235TP-1F	
Q306	6-550-889-01	TRANSISTOR 2SC5938-T112-1B	
Q307	6-550-889-01	TRANSISTOR 2SC5938-T112-1B	
Q308	6-550-580-01	TRANSISTOR 2SA1235TP-1F	
Q309	8-729-120-28	TRANSISTOR 2SC1623-L5L6	
Q310	8-729-142-46	TRANSISTOR 2SC2001-LK	

Ref. No.	Part No.	Description	Remark
Q311	8-729-142-46	TRANSISTOR 2SC2001-LK	
Q312	8-729-041-19	TRANSISTOR 2SA953-T-K	
Q313	8-729-120-28	TRANSISTOR 2SC1623-L5L6	
Q314	6-550-580-01	TRANSISTOR 2SA1235TP-1F	
Q315	8-729-120-28	TRANSISTOR 2SC1623-L5L6	
Q321	8-729-142-46	TRANSISTOR 2SC2001-LK	
Q322	6-550-580-01	TRANSISTOR 2SA1235TP-1F	
Q323	8-729-120-28	TRANSISTOR 2SC1623-L5L6	
Q324	8-729-140-04	TRANSISTOR 2SB1116A-L	
Q327	8-729-120-28	TRANSISTOR 2SC1623-L5L6	
Q351	8-729-120-28	TRANSISTOR 2SC1623-L5L6	
Q352	8-729-120-28	TRANSISTOR 2SC1623-L5L6	
Q361	6-550-580-01	TRANSISTOR 2SA1235TP-1F	
Q362	8-729-120-28	TRANSISTOR 2SC1623-L5L6	
Q371	8-729-120-28	TRANSISTOR 2SC1623-L5L6	
		< RESISTOR >	
R101	1-216-833-11	METAL CHIP 10K 5% 1/10W	
R102	1-216-833-11	METAL CHIP 10K 5% 1/10W	
R103	1-216-851-11	METAL CHIP 330K 5% 1/10W	
R104	1-216-835-11	METAL CHIP 15K 5% 1/10W	
R105	1-216-816-11	METAL CHIP 390 5% 1/10W	
R106	1-216-851-11	METAL CHIP 330K 5% 1/10W	
R107	1-216-835-11	METAL CHIP 15K 5% 1/10W	
R108	1-216-816-11	METAL CHIP 390 5% 1/10W	
R109	1-216-853-11	METAL CHIP 470K 5% 1/10W	
R110	1-216-851-11	METAL CHIP 330K 5% 1/10W	
R111	1-216-847-11	METAL CHIP 150K 5% 1/10W	
R112	1-216-853-11	METAL CHIP 470K 5% 1/10W	
R113	1-216-851-11	METAL CHIP 330K 5% 1/10W	
R114	1-216-847-11	METAL CHIP 150K 5% 1/10W	
R115	1-216-857-11	METAL CHIP 1M 5% 1/10W	
R116	1-216-809-11	METAL CHIP 100 5% 1/10W	
R117	1-216-809-11	METAL CHIP 100 5% 1/10W	
R118	1-216-833-11	METAL CHIP 10K 5% 1/10W	
R119	1-216-841-11	METAL CHIP 47K 5% 1/10W	
R120	1-216-857-11	METAL CHIP 1M 5% 1/10W	
R121	1-216-841-11	METAL CHIP 47K 5% 1/10W	
R123	1-216-833-11	METAL CHIP 10K 5% 1/10W	
R124	1-216-833-11	METAL CHIP 10K 5% 1/10W	
R125	1-216-833-11	METAL CHIP 10K 5% 1/10W	
R126	1-216-833-11	METAL CHIP 10K 5% 1/10W	
R127	1-216-825-11	METAL CHIP 2.2K 5% 1/10W	
R128	1-216-833-11	METAL CHIP 10K 5% 1/10W	
R129	1-216-841-11	METAL CHIP 47K 5% 1/10W	
R131	1-216-833-11	METAL CHIP 10K 5% 1/10W	
R132	1-216-825-11	METAL CHIP 2.2K 5% 1/10W	
R133	1-216-829-11	METAL CHIP 4.7K 5% 1/10W	
R134	1-216-829-11	METAL CHIP 4.7K 5% 1/10W	
R135	1-216-829-11	METAL CHIP 4.7K 5% 1/10W	
R136	1-216-829-11	METAL CHIP 4.7K 5% 1/10W	
R137	1-216-833-11	METAL CHIP 10K 5% 1/10W	
R138	1-216-821-11	METAL CHIP 1K 5% 1/10W	
R139	1-216-864-11	SHORT CHIP 0	
R141	1-216-821-11	METAL CHIP 1K 5% 1/10W	
R142	1-216-821-11	METAL CHIP 1K 5% 1/10W	
R151	1-216-829-11	METAL CHIP 4.7K 5% 1/10W	
R152	1-216-833-11	METAL CHIP 10K 5% 1/10W	

MAIN

Ref. No.	Part No.	Description			Remark
R153	1-216-833-11	METAL CHIP	10K	5%	1/10W
R154	1-216-833-11	METAL CHIP	10K	5%	1/10W
R155	1-216-829-11	METAL CHIP	4.7K	5%	1/10W
R156	1-216-853-11	METAL CHIP	470K	5%	1/10W
R157	1-216-841-11	METAL CHIP	47K	5%	1/10W
R158	1-216-825-11	METAL CHIP	2.2K	5%	1/10W
R159	1-216-833-11	METAL CHIP	10K	5%	1/10W
R160	1-216-821-11	METAL CHIP	1K	5%	1/10W
R161	1-216-833-11	METAL CHIP	10K	5%	1/10W
R162	1-216-825-11	METAL CHIP	2.2K	5%	1/10W
R163	1-216-833-11	METAL CHIP	10K	5%	1/10W
R164	1-216-821-11	METAL CHIP	1K	5%	1/10W
R165	1-216-833-11	METAL CHIP	10K	5%	1/10W
R166	1-216-833-11	METAL CHIP	10K	5%	1/10W
R167	1-216-833-11	METAL CHIP	10K	5%	1/10W
R168	1-216-845-11	METAL CHIP	100K	5%	1/10W
R169	1-216-845-11	METAL CHIP	100K	5%	1/10W
R170	1-216-833-11	METAL CHIP	10K	5%	1/10W
R171	1-216-833-11	METAL CHIP	10K	5%	1/10W
R172	1-216-809-11	METAL CHIP	100	5%	1/10W
R173	1-216-833-11	METAL CHIP	10K	5%	1/10W
R174	1-216-833-11	METAL CHIP	10K	5%	1/10W
R175	1-216-833-11	METAL CHIP	10K	5%	1/10W
R176	1-216-849-11	METAL CHIP	220K	5%	1/10W
R177	1-216-849-11	METAL CHIP	220K	5%	1/10W
R178	1-216-833-11	METAL CHIP	10K	5%	1/10W
R181	1-216-837-11	METAL CHIP	22K	5%	1/10W
R182	1-216-841-11	METAL CHIP	47K	5%	1/10W
R184	1-216-829-11	METAL CHIP	4.7K	5%	1/10W
R186	1-216-839-11	METAL CHIP	33K	5%	1/10W
R187	1-216-841-11	METAL CHIP	47K	5%	1/10W
R189	1-216-809-11	METAL CHIP	100	5%	1/10W
R192	1-216-837-11	METAL CHIP	22K	5%	1/10W
R193	1-216-821-11	METAL CHIP	1K	5%	1/10W
R194	1-218-867-11	METAL CHIP	6.8K	0.5%	1/10W
R195	1-218-867-11	METAL CHIP	6.8K	0.5%	1/10W
R197	1-216-825-11	METAL CHIP	2.2K	5%	1/10W
R198	1-216-825-11	METAL CHIP	2.2K	5%	1/10W
R199	1-216-849-11	METAL CHIP	220K	5%	1/10W
R201	1-216-829-11	METAL CHIP	4.7K	5%	1/10W
R202	1-216-833-11	METAL CHIP	10K	5%	1/10W
R203	1-216-833-11	METAL CHIP	10K	5%	1/10W
R204	1-216-833-11	METAL CHIP	10K	5%	1/10W
R205	1-216-829-11	METAL CHIP	4.7K	5%	1/10W
R206	1-216-841-11	METAL CHIP	47K	5%	1/10W
R207	1-216-825-11	METAL CHIP	2.2K	5%	1/10W
R208	1-216-821-11	METAL CHIP	1K	5%	1/10W
R209	1-216-833-11	METAL CHIP	10K	5%	1/10W
R210	1-216-825-11	METAL CHIP	2.2K	5%	1/10W
R211	1-216-821-11	METAL CHIP	1K	5%	1/10W
R212	1-216-833-11	METAL CHIP	10K	5%	1/10W
R213	1-216-821-11	METAL CHIP	1K	5%	1/10W
R214	1-216-821-11	METAL CHIP	1K	5%	1/10W
R216	1-216-806-11	METAL CHIP	56	5%	1/10W
R217	1-216-806-11	METAL CHIP	56	5%	1/10W
⚠R218	1-215-916-00	METAL OXIDE	680	5%	3W F
⚠R219	1-215-916-00	METAL OXIDE	680	5%	3W F
R220	1-216-837-11	METAL CHIP	22K	5%	1/10W

Ref. No.	Part No.	Description			Remark
R221	1-216-837-11	METAL CHIP	22K	5%	1/10W
R222	1-216-830-11	METAL CHIP	5.6K	5%	1/10W
R223	1-216-864-11	SHORT CHIP	0		
R225	1-216-829-11	METAL CHIP	4.7K	5%	1/10W
R226	1-216-841-11	METAL CHIP	47K	5%	1/10W
R227	1-216-821-11	METAL CHIP	1K	5%	1/10W
R228	1-216-821-11	METAL CHIP	1K	5%	1/10W
R229	1-216-829-11	METAL CHIP	4.7K	5%	1/10W
R230	1-216-829-11	METAL CHIP	4.7K	5%	1/10W
R231	1-216-833-11	METAL CHIP	10K	5%	1/10W
R232	1-216-833-11	METAL CHIP	10K	5%	1/10W
R241	1-216-797-11	METAL CHIP	10	5%	1/10W
R242	1-216-838-11	METAL CHIP	27K	5%	1/10W
R243	1-216-832-11	METAL CHIP	8.2K	5%	1/10W
R244	1-216-832-11	METAL CHIP	8.2K	5%	1/10W
R245	1-216-829-11	METAL CHIP	4.7K	5%	1/10W
R246	1-216-809-11	METAL CHIP	100	5%	1/10W
R247	1-216-833-11	METAL CHIP	10K	5%	1/10W
R248	1-216-833-11	METAL CHIP	10K	5%	1/10W
R249	1-216-841-11	METAL CHIP	47K	5%	1/10W
R250	1-216-833-11	METAL CHIP	10K	5%	1/10W
R251	1-216-833-11	METAL CHIP	10K	5%	1/10W
R252	1-216-864-11	SHORT CHIP	0		
R253	1-216-809-11	METAL CHIP	100	5%	1/10W
R254	1-216-809-11	METAL CHIP	100	5%	1/10W
R262	1-216-827-11	METAL CHIP	3.3K	5%	1/10W
R263	1-216-857-11	METAL CHIP	1M	5%	1/10W
R264	1-216-821-11	METAL CHIP	1K	5%	1/10W
R265	1-216-833-11	METAL CHIP	10K	5%	1/10W
R266	1-216-845-11	METAL CHIP	100K	5%	1/10W
R268	1-216-833-11	METAL CHIP	10K	5%	1/10W
R269	1-216-825-11	METAL CHIP	2.2K	5%	1/10W
R270	1-216-821-11	METAL CHIP	1K	5%	1/10W
R271	1-216-833-11	METAL CHIP	10K	5%	1/10W
R272	1-216-853-11	METAL CHIP	470K	5%	1/10W
R273	1-216-864-11	SHORT CHIP	0		
R274	1-216-864-11	SHORT CHIP	0		
R275	1-216-864-11	SHORT CHIP	0		
R281	1-216-825-11	METAL CHIP	2.2K	5%	1/10W
R282	1-216-825-11	METAL CHIP	2.2K	5%	1/10W
R283	1-216-825-11	METAL CHIP	2.2K	5%	1/10W
R284	1-216-825-11	METAL CHIP	2.2K	5%	1/10W
R306	1-216-833-11	METAL CHIP	10K	5%	1/10W
R307	1-216-833-11	METAL CHIP	10K	5%	1/10W
R308	1-216-825-11	METAL CHIP	2.2K	5%	1/10W
R310	1-216-833-11	METAL CHIP	10K	5%	1/10W
R311	1-216-829-11	METAL CHIP	4.7K	5%	1/10W
R312	1-216-837-11	METAL CHIP	22K	5%	1/10W
R313	1-216-829-11	METAL CHIP	4.7K	5%	1/10W
R321	1-216-829-11	METAL CHIP	4.7K	5%	1/10W
R322	1-216-837-11	METAL CHIP	22K	5%	1/10W
R323	1-216-829-11	METAL CHIP	4.7K	5%	1/10W
R324	1-216-833-11	METAL CHIP	10K	5%	1/10W
R325	1-216-829-11	METAL CHIP	4.7K	5%	1/10W
R341	1-216-833-11	METAL CHIP	10K	5%	1/10W
R342	1-216-821-11	METAL CHIP	1K	5%	1/10W
R343	1-216-837-11	METAL CHIP	22K	5%	1/10W
R344	1-216-837-11	METAL CHIP	22K	5%	1/10W

The components identified by mark ⚠ or dotted line with mark ⚠ are critical for safety.
Replace only with part number specified.

Les composants identifiés par une marque ⚠ sont critiques pour la sécurité.
Ne les remplacer que par une piéce portant le numéro spécifié.

Ref. No.	Part No.	Description			Remark
R345	1-216-833-11	METAL CHIP	10K	5%	1/10W
R346	1-216-821-11	METAL CHIP	1K	5%	1/10W
R347	1-216-837-11	METAL CHIP	22K	5%	1/10W
R348	1-216-837-11	METAL CHIP	22K	5%	1/10W
R351	1-216-835-11	METAL CHIP	15K	5%	1/10W
R352	1-216-845-11	METAL CHIP	100K	5%	1/10W
R353	1-216-841-11	METAL CHIP	47K	5%	1/10W
R354	1-216-829-11	METAL CHIP	4.7K	5%	1/10W
R356	1-216-817-11	METAL CHIP	470	5%	1/10W
R357	1-216-825-11	METAL CHIP	2.2K	5%	1/10W
R358	1-216-809-11	METAL CHIP	100	5%	1/10W
R361	1-216-833-11	METAL CHIP	10K	5%	1/10W
R362	1-216-825-11	METAL CHIP	2.2K	5%	1/10W
R363	1-216-829-11	METAL CHIP	4.7K	5%	1/10W
R364	1-216-829-11	METAL CHIP	4.7K	5%	1/10W
R371	1-216-809-11	METAL CHIP	100	5%	1/10W
R372	1-216-809-11	METAL CHIP	100	5%	1/10W
R373	1-216-809-11	METAL CHIP	100	5%	1/10W
R374	1-216-833-11	METAL CHIP	10K	5%	1/10W
R375	1-216-833-11	METAL CHIP	10K	5%	1/10W
R376	1-216-833-11	METAL CHIP	10K	5%	1/10W
R377	1-216-833-11	METAL CHIP	10K	5%	1/10W
R378	1-216-833-11	METAL CHIP	10K	5%	1/10W
R379	1-216-833-11	METAL CHIP	10K	5%	1/10W
R380	1-216-833-11	METAL CHIP	10K	5%	1/10W
R381	1-216-833-11	METAL CHIP	10K	5%	1/10W
R382	1-216-833-11	METAL CHIP	10K	5%	1/10W
R383	1-216-833-11	METAL CHIP	10K	5%	1/10W
R384	1-216-833-11	METAL CHIP	10K	5%	1/10W
R385	1-216-829-11	METAL CHIP	4.7K	5%	1/10W
R386	1-216-837-11	METAL CHIP	22K	5%	1/10W
R387	1-216-829-11	METAL CHIP	4.7K	5%	1/10W
R388	1-216-837-11	METAL CHIP	22K	5%	1/10W
R389	1-216-829-11	METAL CHIP	4.7K	5%	1/10W
R390	1-216-837-11	METAL CHIP	22K	5%	1/10W
R391	1-216-833-11	METAL CHIP	10K	5%	1/10W
R392	1-216-821-11	METAL CHIP	1K	5%	1/10W
R393	1-216-833-11	METAL CHIP	10K	5%	1/10W
R394	1-216-821-11	METAL CHIP	1K	5%	1/10W
R395	1-216-837-11	METAL CHIP	22K	5%	1/10W
R396	1-216-829-11	METAL CHIP	4.7K	5%	1/10W
R397	1-216-833-11	METAL CHIP	10K	5%	1/10W

****

1-687-133-12 MOTOR (LD) BOARD
****

****

1-687-134-12 MOTOR (TB) BOARD
****

< CONNECTOR >

CN742	1-784-727-11	CONNECTOR, FFC 5P			

****

Ref. No.	Part No.	Description			Remark
	A-4751-531-A	PANEL BOARD, COMPLETE (GX750)			
	A-4751-540-A	PANEL BOARD, COMPLETE (RG551)			
	A-4751-721-A	PANEL BOARD, COMPLETE (RX550)			
		**********			
		< CAPACITOR >			
C601	1-162-919-11	CERAMIC CHIP	22PF	5%	50V
C602	1-162-919-11	CERAMIC CHIP	22PF	5%	50V
C603	1-162-919-11	CERAMIC CHIP	22PF	5%	50V
C604	1-164-156-11	CERAMIC CHIP	0.1uF		25V
C605	1-126-163-11	ELECT	4.7uF	20%	50V
C606	1-115-156-11	CERAMIC CHIP	1uF		10V
C607	1-162-964-11	CERAMIC CHIP	0.001uF	10%	50V
C608	1-162-970-11	CERAMIC CHIP	0.01uF	10%	25V
C609	1-115-156-11	CERAMIC CHIP	1uF		10V
C610	1-126-916-11	ELECT	1000uF	20%	6.3V
C611	1-164-156-11	CERAMIC CHIP	0.1uF		25V
C612	1-126-157-11	ELECT	10uF	20%	16V
C613	1-164-156-11	CERAMIC CHIP	0.1uF		25V
C614	1-164-156-11	CERAMIC CHIP	0.1uF		25V
C615	1-124-257-00	ELECT	2.2uF	20%	50V
C617	1-162-964-11	CERAMIC CHIP	0.001uF	10%	50V
C618	1-162-964-11	CERAMIC CHIP	0.001uF	10%	50V
C619	1-124-589-11	ELECT	47uF	20%	16V
C620	1-119-772-91	ELECT	47uF	20%	35V
C621	1-162-995-11	CERAMIC CHIP	0.022uF		50V
C622	1-126-163-11	ELECT	4.7uF	20%	50V
C623	1-126-163-11	ELECT	4.7uF	20%	50V
C624	1-162-918-11	CERAMIC CHIP	18PF	5%	50V
C625	1-162-919-11	CERAMIC CHIP	22PF	5%	50V
C626	1-164-156-11	CERAMIC CHIP	0.1uF		25V
C628	1-162-927-11	CERAMIC CHIP	100PF	5%	50V
C629	1-162-927-11	CERAMIC CHIP	100PF	5%	50V
C630	1-162-927-11	CERAMIC CHIP	100PF	5%	50V
C631	1-162-927-11	CERAMIC CHIP	100PF	5%	50V
C632	1-162-927-11	CERAMIC CHIP	100PF	5%	50V
C633	1-162-927-11	CERAMIC CHIP	100PF	5%	50V
C634	1-162-927-11	CERAMIC CHIP	100PF	5%	50V
C635	1-162-927-11	CERAMIC CHIP	100PF	5%	50V
C636	1-162-927-11	CERAMIC CHIP	100PF	5%	50V
C637	1-162-927-11	CERAMIC CHIP	100PF	5%	50V
C638	1-162-927-11	CERAMIC CHIP	100PF	5%	50V
C639	1-162-927-11	CERAMIC CHIP	100PF	5%	50V
C640	1-162-927-11	CERAMIC CHIP	100PF	5%	50V
C641	1-164-156-11	CERAMIC CHIP	0.1uF		25V
C642	1-164-156-11	CERAMIC CHIP	0.1uF		25V
C643	1-164-156-11	CERAMIC CHIP	0.1uF		25V
C644	1-126-157-11	ELECT	10uF	20%	16V
C646	1-124-234-00	ELECT	22uF	20%	16V
C647	1-124-589-11	ELECT	47uF	20%	16V
C648	1-124-234-00	ELECT	22uF	20%	16V
C649	1-164-156-11	CERAMIC CHIP	0.1uF		25V
C653	1-162-959-11	CERAMIC CHIP	330PF	5%	50V
C654	1-164-156-11	CERAMIC CHIP	0.1uF		25V
C655	1-164-156-11	CERAMIC CHIP	0.1uF		25V
C656	1-162-927-11	CERAMIC CHIP	100PF	5%	50V

PANEL

Ref. No.	Part No.	Description	Remark
		< CONNECTOR >	
CN601	1-784-751-11	CONNECTOR, FFC 29P	
CN602	1-784-774-11	CONNECTOR, FFC 13P	
CN603	1-784-778-11	CONNECTOR, FFC 17P	
* CN604	1-564-708-11	PIN, CONNECTOR (SMALL TYPE) 6P	
CN605	1-564-707-11	PIN, CONNECTOR (SMALL TYPE) 5P	
CN608	1-818-282-11	PIN, CONNECTOR 3P	
		< DIODE >	
D603	8-719-988-61	DIODE 1SS355TE-17	
D604	8-719-988-61	DIODE 1SS355TE-17	
D605	8-719-988-61	DIODE 1SS355TE-17	
* D606	6-500-486-01	DIODE PTZ-TE25-11B (RG551)	
D607	8-719-988-61	DIODE 1SS355TE-17	
D608	8-719-988-61	DIODE 1SS355TE-17	
D609	8-719-988-61	DIODE 1SS355TE-17	
D610	8-719-056-78	DIODE UDZ-TE-17-4.3B	
D611	8-719-988-61	DIODE 1SS355TE-17	
D613	8-719-988-61	DIODE 1SS355TE-17	
D614	8-719-988-61	DIODE 1SS355TE-17	
D615	8-719-988-61	DIODE 1SS355TE-17	
D616	8-719-988-61	DIODE 1SS355TE-17	
D620	8-719-988-61	DIODE 1SS355TE-17 (RG551)	
D621	8-719-988-61	DIODE 1SS355TE-17	
D623	8-719-988-61	DIODE 1SS355TE-17	
D624	8-719-988-61	DIODE 1SS355TE-17 (RG551/RX550)	
D625	8-719-988-61	DIODE 1SS355TE-17 (RG551/RX550)	
D627	8-719-988-61	DIODE 1SS355TE-17	
D630	8-719-988-61	DIODE 1SS355TE-17	
D631	8-719-978-33	DIODE DTZ-TT11-6.8B	
D632	8-719-083-57	DIODE UDZSTE-173.6B	
D633	8-719-988-61	DIODE 1SS355TE-17	
		< FLUORESCENT INDICATOR >	
FL601	1-518-976-11	INDICATOR TUBE, FLUORESCENT	
		< IC >	
IC601	6-804-440-01	IC LC876996A-53H2-E	
IC602	6-704-046-01	IC BU2099FV	
IC603	6-704-045-01	IC MM1574ANLE	
IC604	8-759-533-04	IC M62703ML-E1	
		< JUMPER RESISTOR >	
JR607	1-216-864-11	SHORT CHIP 0	
JR608	1-216-864-11	SHORT CHIP 0	
JR609	1-216-864-11	SHORT CHIP 0	
JR611	1-216-864-11	SHORT CHIP 0	
JR612	1-216-864-11	SHORT CHIP 0	
JR614	1-216-864-11	SHORT CHIP 0	
JR617	1-216-864-11	SHORT CHIP 0	
JR621	1-216-864-11	SHORT CHIP 0	
JR622	1-216-864-11	SHORT CHIP 0	
JR623	1-216-864-11	SHORT CHIP 0	
		< DIODE >	
LED601	6-500-809-01	LED SELU5223C-STP15 (I/⏻)	
LED602	6-500-810-01	LED SELU5923C-STP15 (WIRELESS) (GX750)	

Ref. No.	Part No.	Description	Remark
		< TRANSISTOR >	
Q601	8-729-116-57	TRANSISTOR 2SB1068-K	
Q602	8-729-140-04	TRANSISTOR 2SB1116A-L	
Q603	8-729-140-04	TRANSISTOR 2SB1116A-L	
Q604	8-729-119-76	TRANSISTOR 2SA1175-HFE	
Q605	8-729-120-28	TRANSISTOR 2SC1623-L5L6	
Q610	8-729-027-55	TRANSISTOR DTC143EKA-T146	
Q611	8-729-027-55	TRANSISTOR DTC143EKA-T146	
Q612	8-729-027-55	TRANSISTOR DTC143EKA-T146	
Q613	8-729-027-55	TRANSISTOR DTC143EKA-T146	
Q614	8-729-027-55	TRANSISTOR DTC143EKA-T146	
Q615	8-729-027-55	TRANSISTOR DTC143EKA-T146	
Q616	8-729-027-55	TRANSISTOR DTC143EKA-T146	
		< RESISTOR >	
R601	1-216-829-11	METAL CHIP 4.7K 5% 1/10W	
R602	1-216-829-11	METAL CHIP 4.7K 5% 1/10W	
R603	1-216-829-11	METAL CHIP 4.7K 5% 1/10W	
R604	1-216-841-11	METAL CHIP 47K 5% 1/10W	
R605	1-216-829-11	METAL CHIP 4.7K 5% 1/10W	
R606	1-216-829-11	METAL CHIP 4.7K 5% 1/10W	
R607	1-216-841-11	METAL CHIP 47K 5% 1/10W	
R608	1-216-829-11	METAL CHIP 4.7K 5% 1/10W	
R609	1-216-837-11	METAL CHIP 22K 5% 1/10W	
R610	1-216-833-11	METAL CHIP 10K 5% 1/10W	
R611	1-216-837-11	METAL CHIP 22K 5% 1/10W	
R612	1-216-833-11	METAL CHIP 10K 5% 1/10W	
R613	1-216-837-11	METAL CHIP 22K 5% 1/10W	
R614	1-216-837-11	METAL CHIP 22K 5% 1/10W	
R615	1-216-837-11	METAL CHIP 22K 5% 1/10W	
R616	1-216-833-11	METAL CHIP 10K 5% 1/10W	
R617	1-216-837-11	METAL CHIP 22K 5% 1/10W	
R618	1-216-833-11	METAL CHIP 10K 5% 1/10W	
R619	1-216-837-11	METAL CHIP 22K 5% 1/10W	
R620	1-216-837-11	METAL CHIP 22K 5% 1/10W	
R621	1-216-833-11	METAL CHIP 10K 5% 1/10W	
R622	1-216-049-11	RES-CHIP 1K 5% 1/10W	
R623	1-216-833-11	METAL CHIP 10K 5% 1/10W	
R624	1-216-049-11	RES-CHIP 1K 5% 1/10W	
R625	1-216-833-11	METAL CHIP 10K 5% 1/10W	
R626	1-216-049-11	RES-CHIP 1K 5% 1/10W	
R627	1-216-833-11	METAL CHIP 10K 5% 1/10W	
R628	1-216-833-11	METAL CHIP 10K 5% 1/10W	
R629	1-216-150-91	RES-CHIP 10 5% 1/8W	
R632	1-216-809-11	METAL CHIP 100 5% 1/10W	
R633	1-216-809-11	METAL CHIP 100 5% 1/10W	
R634	1-216-809-11	METAL CHIP 100 5% 1/10W	
R635	1-216-809-11	METAL CHIP 100 5% 1/10W	
R636	1-216-833-11	METAL CHIP 10K 5% 1/10W	
R637	1-216-833-11	METAL CHIP 10K 5% 1/10W	
R638	1-216-809-11	METAL CHIP 100 5% 1/10W	
R639	1-216-829-11	METAL CHIP 4.7K 5% 1/10W	
R640	1-216-834-11	METAL CHIP 12K 5% 1/10W	
R641	1-216-849-11	METAL CHIP 220K 5% 1/10W	
R642	1-216-817-11	METAL CHIP 470 5% 1/10W	
R643	1-216-819-11	METAL CHIP 680 5% 1/10W	
R644	1-216-821-11	METAL CHIP 1K 5% 1/10W	

PANEL

Ref. No.	Part No.	Description			Remark
R645	1-216-823-11	METAL CHIP	1.5K	5%	1/10W
R646	1-216-823-11	METAL CHIP	1.5K	5%	1/10W
R647	1-216-825-11	METAL CHIP	2.2K	5%	1/10W
R648	1-216-827-11	METAL CHIP	3.3K	5%	1/10W
R649	1-216-829-11	METAL CHIP	4.7K	5%	1/10W
R650	1-218-867-11	METAL CHIP	6.8K	0.5%	1/10W
R651	1-216-833-11	METAL CHIP	10K	5%	1/10W
R652	1-216-835-11	METAL CHIP	15K	5%	1/10W
R653	1-216-817-11	METAL CHIP	470	5%	1/10W
R654	1-216-819-11	METAL CHIP	680	5%	1/10W
R655	1-216-821-11	METAL CHIP	1K	5%	1/10W
R656	1-216-823-11	METAL CHIP	1.5K	5%	1/10W
R657	1-216-823-11	METAL CHIP	1.5K	5%	1/10W
R658	1-216-825-11	METAL CHIP	2.2K	5%	1/10W
R659	1-216-827-11	METAL CHIP	3.3K	5%	1/10W
R660	1-216-829-11	METAL CHIP	4.7K	5%	1/10W
R661	1-218-867-11	METAL CHIP	6.8K	0.5%	1/10W
R662	1-216-833-11	METAL CHIP	10K	5%	1/10W
R663	1-216-837-11	METAL CHIP	22K	5%	1/10W
R664	1-216-817-11	METAL CHIP	470	5%	1/10W
R665	1-216-819-11	METAL CHIP	680	5%	1/10W
R666	1-216-821-11	METAL CHIP	1K	5%	1/10W
R667	1-216-823-11	METAL CHIP	1.5K	5%	1/10W
R668	1-216-823-11	METAL CHIP	1.5K	5%	1/10W
R669	1-216-825-11	METAL CHIP	2.2K	5%	1/10W
R670	1-216-827-11	METAL CHIP	3.3K	5%	1/10W
R671	1-216-829-11	METAL CHIP	4.7K	5%	1/10W
R672	1-216-833-11	METAL CHIP	10K	5%	1/10W
R674	1-216-835-11	METAL CHIP	15K	5%	1/10W
R675	1-216-835-11	METAL CHIP	15K	5%	1/10W
R676	1-216-835-11	METAL CHIP	15K	5%	1/10W
R677	1-216-864-11	SHORT CHIP	0		
R678	1-216-845-11	METAL CHIP	100K	5%	1/10W
R679	1-216-172-00	RES-CHIP	82	5%	1/8W
R680	1-216-838-11	METAL CHIP	27K	5%	1/10W
R681	1-216-849-11	METAL CHIP	220K	5%	1/10W
R682	1-216-833-11	METAL CHIP	10K	5%	1/10W
R683	1-216-849-11	METAL CHIP	220K	5%	1/10W
R684	1-216-821-11	METAL CHIP	1K	5%	1/10W
R685	1-216-841-11	METAL CHIP	47K	5%	1/10W
R686	1-216-841-11	METAL CHIP	47K	5%	1/10W
R687	1-216-833-11	METAL CHIP	10K	5%	1/10W
R688	1-216-817-11	METAL CHIP	470	5%	1/10W
R689	1-216-829-11	METAL CHIP	4.7K	5%	1/10W
R690	1-216-809-11	METAL CHIP	100	5%	1/10W
R691	1-216-809-11	METAL CHIP	100	5%	1/10W
R692	1-216-809-11	METAL CHIP	100	5%	1/10W
R693	1-216-809-11	METAL CHIP	100	5%	1/10W
R694	1-216-809-11	METAL CHIP	100	5%	1/10W
R695	1-216-809-11	METAL CHIP	100	5%	1/10W
R696	1-216-809-11	METAL CHIP	100	5%	1/10W
R697	1-216-809-11	METAL CHIP	100	5%	1/10W
R698	1-216-182-00	RES-CHIP	220	5%	1/8W
R700	1-216-182-00	RES-CHIP	220	5%	1/8W
R702	1-216-182-00	RES-CHIP	220	5%	1/8W
R704	1-216-182-00	RES-CHIP	220	5%	1/8W
R706	1-216-182-00	RES-CHIP	220	5%	1/8W
R708	1-216-182-00	RES-CHIP	220	5%	1/8W

Ref. No.	Part No.	Description			Remark
R710	1-216-833-11	METAL CHIP	10K	5%	1/10W
R711	1-216-833-11	METAL CHIP	10K	5%	1/10W
R712	1-216-797-11	METAL CHIP	10	5%	1/10W
R713	1-216-797-11	METAL CHIP	10	5%	1/10W
R714	1-216-809-11	METAL CHIP	100	5%	1/10W
R715	1-216-805-11	METAL CHIP	47	5%	1/10W
R716	1-216-837-11	METAL CHIP	22K	5%	1/10W
R717	1-216-827-11	METAL CHIP	3.3K	5%	1/10W
R718	1-216-837-11	METAL CHIP	22K	5%	1/10W
R719	1-216-827-11	METAL CHIP	3.3K	5%	1/10W
R720	1-218-867-11	METAL CHIP	6.8K	0.5%	1/10W
R721	1-216-833-11	METAL CHIP	10K	5%	1/10W
R722	1-216-835-11	METAL CHIP	15K	5%	1/10W
R723	1-216-809-11	METAL CHIP	100	5%	1/10W
R724	1-216-198-00	RES-CHIP	1K	5%	1/8W (GX750)
R725	1-216-809-11	METAL CHIP	100	5%	1/10W
R726	1-216-182-00	RES-CHIP	220	5%	1/8W (GX750)
R727	1-220-397-11	METAL CHIP	4.7M	5%	1/10W
R728	1-220-397-11	METAL CHIP	4.7M	5%	1/10W
R729	1-216-809-11	METAL CHIP	100	5%	1/10W
R730	1-216-809-11	METAL CHIP	100	5%	1/10W
R731	1-216-809-11	METAL CHIP	100	5%	1/10W
R732	1-216-853-11	METAL CHIP	470K	5%	1/10W
R733	1-216-809-11	METAL CHIP	100	5%	1/10W
R734	1-216-821-11	METAL CHIP	1K	5%	1/10W
R735	1-216-821-11	METAL CHIP	1K	5%	1/10W
R736	1-216-821-11	METAL CHIP	1K	5%	1/10W
R737	1-216-845-11	METAL CHIP	100K	5%	1/10W
R738	1-216-845-11	METAL CHIP	100K	5%	1/10W
R739	1-216-845-11	METAL CHIP	100K	5%	1/10W
R740	1-216-845-11	METAL CHIP	100K	5%	1/10W
R741	1-216-845-11	METAL CHIP	100K	5%	1/10W
R742	1-216-845-11	METAL CHIP	100K	5%	1/10W
R743	1-216-845-11	METAL CHIP	100K	5%	1/10W
R744	1-216-845-11	METAL CHIP	100K	5%	1/10W
R745	1-216-845-11	METAL CHIP	100K	5%	1/10W
R746	1-216-845-11	METAL CHIP	100K	5%	1/10W
R747	1-216-845-11	METAL CHIP	100K	5%	1/10W
R748	1-216-845-11	METAL CHIP	100K	5%	1/10W
R749	1-216-845-11	METAL CHIP	100K	5%	1/10W
R750	1-216-845-11	METAL CHIP	100K	5%	1/10W
R751	1-216-845-11	METAL CHIP	100K	5%	1/10W
R752	1-216-845-11	METAL CHIP	100K	5%	1/10W
R753	1-216-845-11	METAL CHIP	100K	5%	1/10W
R754	1-216-845-11	METAL CHIP	100K	5%	1/10W
R755	1-216-845-11	METAL CHIP	100K	5%	1/10W
R756	1-216-845-11	METAL CHIP	100K	5%	1/10W
R757	1-216-845-11	METAL CHIP	100K	5%	1/10W
R758	1-216-845-11	METAL CHIP	100K	5%	1/10W
R759	1-216-845-11	METAL CHIP	100K	5%	1/10W
R760	1-216-845-11	METAL CHIP	100K	5%	1/10W
R761	1-216-845-11	METAL CHIP	100K	5%	1/10W
R762	1-216-845-11	METAL CHIP	100K	5%	1/10W
R763	1-216-845-11	METAL CHIP	100K	5%	1/10W
R764	1-216-845-11	METAL CHIP	100K	5%	1/10W
R765	1-216-845-11	METAL CHIP	100K	5%	1/10W

PANEL **REM** **SENSOR** **SUB TRANS**

Ref. No.	Part No.	Description			Remark
R766	1-216-845-11	METAL CHIP	100K	5%	1/10W
R767	1-216-845-11	METAL CHIP	100K	5%	1/10W
R768	1-216-845-11	METAL CHIP	100K	5%	1/10W
R769	1-216-845-11	METAL CHIP	100K	5%	1/10W
R770	1-216-845-11	METAL CHIP	100K	5%	1/10W
R771	1-216-841-11	METAL CHIP	47K	5%	1/10W
R772	1-216-821-11	METAL CHIP	1K	5%	1/10W
R773	1-216-809-11	METAL CHIP	100	5%	1/10W
R774	1-216-809-11	METAL CHIP	100	5%	1/10W
R775	1-216-809-11	METAL CHIP	100	5%	1/10W
R776	1-216-817-11	METAL CHIP	470	5%	1/10W
R777	1-216-809-11	METAL CHIP	100	5%	1/10W
R778	1-216-809-11	METAL CHIP	100	5%	1/10W
R779	1-216-809-11	METAL CHIP	100	5%	1/10W
R780	1-216-817-11	METAL CHIP	470	5%	1/10W
R781	1-216-809-11	METAL CHIP	100	5%	1/10W
R782	1-216-809-11	METAL CHIP	100	5%	1/10W
R783	1-216-809-11	METAL CHIP	100	5%	1/10W
R784	1-216-809-11	METAL CHIP	100	5%	1/10W
R785	1-216-809-11	METAL CHIP	100	5%	1/10W
R786	1-216-833-11	METAL CHIP	10K	5%	1/10W
R787	1-216-809-11	METAL CHIP	100	5%	1/10W
R788	1-216-809-11	METAL CHIP	100	5%	1/10W
R789	1-216-841-11	METAL CHIP	47K	5%	1/10W
R790	1-216-821-11	METAL CHIP	1K	5%	1/10W
R791	1-216-809-11	METAL CHIP	100	5%	1/10W
R792	1-216-809-11	METAL CHIP	100	5%	1/10W
R793	1-216-809-11	METAL CHIP	100	5%	1/10W
R794	1-216-809-11	METAL CHIP	100	5%	1/10W
R795	1-216-809-11	METAL CHIP	100	5%	1/10W
R796	1-216-809-11	METAL CHIP	100	5%	1/10W
R797	1-216-821-11	METAL CHIP	1K	5%	1/10W
R798	1-216-821-11	METAL CHIP	1K	5%	1/10W
R799	1-216-821-11	METAL CHIP	1K	5%	1/10W
R854	1-216-813-11	METAL CHIP	220	5%	1/10W
R863	1-216-170-00	RES-CHIP	68	5%	1/8W
		< SWITCH >			
S601	1-762-875-21	SWITCH, KEYBOARD (I/⏻)			
S602	1-762-875-21	SWITCH, KEYBOARD (DISPLAY)			
S603	1-762-875-21	SWITCH, KEYBOARD (EQ BAND)			
S604	1-762-875-21	SWITCH, KEYBOARD (DISC 1)			
S605	1-762-875-21	SWITCH, KEYBOARD (DISC 2)			
S606	1-762-875-21	SWITCH, KEYBOARD (DISC 3)			
S607	1-762-875-21	SWITCH, KEYBOARD (DISC SKIP/EX-CHANGE)			
S608	1-762-875-21	SWITCH, KEYBOARD (⏏)			
S610	1-762-875-21	SWITCH, KEYBOARD (P FILE)			
S611	1-762-875-21	SWITCH, KEYBOARD (PRESET EQ)			
S612	1-762-875-21	SWITCH, KEYBOARD (ENTER)			
S621	1-762-875-21	SWITCH, KEYBOARD (CD)			
S622	1-762-875-21	SWITCH, KEYBOARD (TUNER/BAND)			
S623	1-762-875-21	SWITCH, KEYBOARD (TAPE A/B)			
S624	1-762-875-21	SWITCH, KEYBOARD (GAME)			
S625	1-762-875-21	SWITCH, KEYBOARD (WIRELESS) (GX750)			
S626	1-762-875-21	SWITCH, KEYBOARD (ILLUMINATION)			
S627	1-762-875-21	SWITCH, KEYBOARD (PLAY MODE/TUNING MODE)			
S628	1-762-875-21	SWITCH, KEYBOARD (GAME MIXING)			
S629	1-762-875-21	SWITCH, KEYBOARD (CD SYNC)			

Ref. No.	Part No.	Description	Remark
S630	1-762-875-21	SWITCH, KEYBOARD (REC PAUSE/START)	
S641	1-762-875-21	SWITCH, KEYBOARD (GROOVE)	
S642	1-762-875-21	SWITCH, KEYBOARD (SURROUND)	
S643	1-762-875-21	SWITCH, KEYBOARD (EFFECT ON/OFF)	
S644	1-762-875-21	SWITCH, KEYBOARD (TUNING +)	
S645	1-762-875-21	SWITCH, KEYBOARD (▷)	
S646	1-762-875-21	SWITCH, KEYBOARD (▶▶ ALBUM +)	
S647	1-762-875-21	SWITCH, KEYBOARD (◀◀ ALBUM –)	
S648	1-762-875-21	SWITCH, KEYBOARD (❚❚)	
S649	1-762-875-21	SWITCH, KEYBOARD (■)	
S650	1-762-875-21	SWITCH, KEYBOARD (TUNING –)	
		< VIBRATOR >	
X601	1-760-252-12	VIBRATOR, CRYSTAL (32.768kHz)	
X602	1-795-004-21	VIBRATOR, CERAMIC (10MHz)	
**********			
		REM BOARD **********	
		< CONNECTOR >	
CN610	1-816-423-11	SOCKET, CONNECTOR 3P	
		< IC >	
IC610	6-600-174-01	IC RPM7240-H4 (IR)	
		< JUMPER RESISTOR >	
JR624	1-216-296-11	SHORT CHIP 0	
**********			
	1-687-132-12	SENSOR BOARD **********	
		< CONNECTOR >	
CN731	1-785-329-21	PIN, CONNECTOR (LIGHT ANGLE) 3P	
		< IC >	
IC731	6-600-022-01	IC RPI-576	
**********			
	X-4956-292-1	SUB TRANS BOARD, COMPLETE (GX750/RX550)	
	X-4956-294-1	SUB TRANS BOARD, COMPLETE (RG551:E2,E3,E51,AR)	
	X-4956-322-1	SUB TRANS BOARD, COMPLETE (RG551:MX) **********	
		< CONNECTOR >	
CN901	1-564-321-00	PIN, CONNECTOR (3.96mm PITCH) 2P	
		< DIODE >	
D901	8-719-991-33	DIODE 1SS133T-77	
D902	6-500-522-21	DIODE 10EDB40-TB3	
D903	6-500-522-21	DIODE 10EDB40-TB3	
D904	6-500-522-21	DIODE 10EDB40-TB3	
D905	6-500-522-21	DIODE 10EDB40-TB3	
		< RELAY >	
⚠RY901	1-755-276-11	RELAY, POWER	

The components identified by mark ⚠ or dotted line with mark ⚠ are critical for safety. Replace only with part number specified.	Les composants identifiés par une marque ⚠ sont critiques pour la sécurité. Ne les remplacer que par une piéce portant le numéro spécifié.

SUB TRANS | SUB WOOFER | SW | TRANS

Ref. No.	Part No.	Description				Remark
		< SWITCH >				
⚠ S901	1-786-055-21	SELECTOR, VOLTAGE (VOLTAGE SELECTOR)				(E2,E3,E51)
**********						
	A-4752-173-A	SUB WOOFER BOARD, COMPLETE				
		**********				
		< CAPACITOR >				
C502	1-162-286-31	CERAMIC	220PF	10%	50V	
C503	1-162-600-11	CERAMIC	0.0047uF	10%	16V	
C504	1-104-662-91	ELECT	22uF	20%	25V	
C505	1-162-199-31	CERAMIC	10PF	5%	50V	
C506	1-104-665-11	ELECT	100uF	20%	25V	
C507	1-126-967-11	ELECT	47uF	20%	50V	
C508	1-162-286-31	CERAMIC	220PF	10%	50V	
C509	1-128-563-11	ELECT	100uF	20%	100V	
C510	1-128-582-11	ELECT	10uF	20%	100V	
C511	1-128-582-11	ELECT	10uF	20%	100V	
C512	1-136-497-81	FILM	0.1uF	5%	50V	
C513	1-136-497-81	FILM	0.1uF	5%	50V	
C514	1-126-948-11	ELECT	100uF	20%	35V	
C515	1-126-963-11	ELECT	4.7uF	20%	50V	
C516	1-126-964-11	ELECT	10uF	20%	50V	
C517	1-126-964-11	ELECT	10uF	20%	50V	
		< CONNECTOR >				
* CN501	1-564-706-11	PIN, CONNECTOR (SMALL TYPE) 4P				
* CN502	1-564-510-11	PLUG, CONNECTOR 7P				
* CN503	1-564-517-11	PLUG, CONNECTOR 2P (SUB WOOFER OUT				CONTROL)
		< DIODE >				
D501	8-719-110-31	DIODE RD12ESB2				
D502	8-719-991-33	DIODE 1SS133T-77				
D503	8-719-991-33	DIODE 1SS133T-77				
D504	8-719-991-33	DIODE 1SS133T-77				
D505	8-719-991-33	DIODE 1SS133T-77				
D506	8-719-109-97	DIODE RD6.8ESB2				
D507	8-719-991-33	DIODE 1SS133T-77				
		< IC >				
IC501	6-600-091-01	IC STK404-130S				
		< JACK >				
JK501	1-774-785-11	JACK, PIN 1P (SUB WOOFER)				
		< TRANSISTOR >				
Q501	8-729-140-84	TRANSISTOR 2SC1841-PAFAEA				
Q502	8-729-119-76	TRANSISTOR 2SA1175-HFE				
Q503	8-729-119-79	TRANSISTOR 2SC2785-FEK				
Q505	8-729-119-79	TRANSISTOR 2SC2785-FEK				
Q506	8-729-119-79	TRANSISTOR 2SC2785-FEK				
Q507	8-729-119-79	TRANSISTOR 2SC2785-FEK				

Ref. No.	Part No.	Description				Remark
		< RESISTOR >				
R501	1-247-871-91	CARBON	47K	5%	1/4W	
R502	1-247-871-91	CARBON	47K	5%	1/4W	
R503	1-247-831-91	CARBON	1K	5%	1/4W	
R504	1-247-871-91	CARBON	47K	5%	1/4W	
R505	1-260-107-11	CARBON	4.7K	5%	1/2W	
⚠ R506	1-202-972-61	FUSIBLE	1	5%	1/4W	F
R507	1-260-107-11	CARBON	4.7K	5%	1/2W	
R508	1-260-107-11	CARBON	4.7K	5%	1/2W	
⚠ R509	1-212-881-11	FUSIBLE	100	5%	1/4W	F
⚠ R510	1-217-156-00	METAL	0.22	10%	5W	F
⚠ R511	1-217-156-00	METAL	0.22	10%	5W	F
R512	1-260-076-11	CARBON	10	5%	1/2W	
R513	1-247-831-91	CARBON	1K	5%	1/4W	
R514	1-247-863-91	CARBON	22K	5%	1/4W	
R515	1-247-871-91	CARBON	47K	5%	1/4W	
R516	1-260-316-51	CARBON	100	5%	1/2W	
R517	1-249-429-11	CARBON	10K	5%	1/4W	
R518	1-249-421-11	CARBON	2.2K	5%	1/4W	
R519	1-249-421-11	CARBON	2.2K	5%	1/4W	
R520	1-247-879-91	CARBON	100K	5%	1/4W	
R524	1-247-871-91	CARBON	47K	5%	1/4W	
R525	1-247-863-91	CARBON	22K	5%	1/4W	
R526	1-249-428-11	CARBON	8.2K	5%	1/4W	
R527	1-247-903-00	CARBON	1M	5%	1/4W	
R528	1-249-429-11	CARBON	10K	5%	1/4W	
R529	1-249-421-11	CARBON	2.2K	5%	1/4W	
R530	1-247-863-91	CARBON	22K	5%	1/4W	
R531	1-247-847-91	CARBON	4.7K	5%	1/4W	
R532	1-247-863-91	CARBON	22K	5%	1/4W	
R533	1-247-863-91	CARBON	22K	5%	1/4W	
		< RELAY >				
RY501	1-755-373-11	RELAY				
**********						
	1-687-669-12	SW BOARD				
		**********				
		< SWITCH >				
S751	1-786-514-11	SWITCH, LEVER (SLIDE) (OPEN)				
**********						
		TRANS BOARD				
		**********				
	1-533-233-11	HOLDER, FUSE				
		< CAPACITOR >				
C906	1-164-159-11	CERAMIC	0.1uF		50V	
C908	1-128-553-11	ELECT	220uF	20%	63V	
C909	1-126-964-11	ELECT	10uF	20%	50V	
C910	1-126-968-11	ELECT	100uF	20%	50V	
C911	1-126-942-61	ELECT	1000uF	20%	25V	
C920	1-131-679-31	FILM	0.01uF	5%	50V	
C921	1-131-679-31	FILM	0.01uF	5%	50V	
C922	1-131-679-31	FILM	0.01uF	5%	50V	
C923	1-131-679-31	FILM	0.01uF	5%	50V	
C924	1-136-165-00	FILM	0.1uF	5%	50V	

The components identified by mark ⚠ or dotted line with mark ⚠ are critical for safety.
Replace only with part number specified.

Les composants identifiés par une marque ⚠ sont critiques pour la sécurité.
Ne les remplacer que par une piéce portant le numéro spécifié.

TRANS **VIDEO OUT** **6 STREAM LED**

Ref. No.	Part No.	Description			Remark
C925	1-136-165-00	FILM	0.1uF	5%	50V
C926	1-164-159-11	CERAMIC	0.1uF		50V
		< CONNECTOR >			
CN904	1-564-321-00	PIN, CONNECTOR (3.96mm PITCH) 2P			(US,CND,AR,MX)
CN904	1-568-106-11	PIN, CONNECTOR (3.96mm PITCH) 4P			(E2,E3,E51)
CN905	1-564-506-11	PLUG, CONNECTOR 3P (RG551)			
* CN905	1-564-508-11	PLUG, CONNECTOR 5P (GX750/RX550)			
* CN906	1-564-705-11	PIN, CONNECTOR (SMALL TYPE) 3P			
* CN907	1-764-333-11	PLUG, CONNECTOR 10P			
		< DIODE >			
D906	8-719-983-79	DIODE MTZJ-T-72-27D			
D908	6-500-522-21	DIODE 10EDB40-TB3			
		< TRANSISTOR >			
Q902	8-729-048-52	TRANSISTOR 2SA1932 (TP)			
		< RESISTOR >			
⚠R902	1-219-237-91	SOLID	3.3M	20%	1/2W F (GX750/RX550)
R903	1-249-430-11	CARBON	12K	5%	1/4W
R904	1-247-831-91	CARBON	1K	5%	1/4W
⚠R908	1-202-972-61	FUSIBLE	1	5%	1/4W F
**********					
		VIDEO OUT BOARD			
		**********			
		< CONNECTOR >			
* CN805	1-564-704-11	PIN, CONNECTOR (SMALL TYPE) 2P			
		< JACK >			
J803	1-774-227-11	JACK, PIN 1P (VIDEO OUT)			
**********					
		6 STREAM LED BOARD			
		**********			
		< DIODE >			
LED610	6-500-809-01	LED SELU5223C-STP15 (ILLUMINATION)			
LED611	6-500-809-01	LED SELU5223C-STP15 (ILLUMINATION)			
LED612	6-500-809-01	LED SELU5223C-STP15 (ILLUMINATION)			
LED613	6-500-809-01	LED SELU5223C-STP15 (ILLUMINATION)			
LED614	6-500-809-01	LED SELU5223C-STP15 (ILLUMINATION)			
LED615	6-500-809-01	LED SELU5223C-STP15 (ILLUMINATION)			
		< RESISTOR >			
R673	1-216-837-11	METAL CHIP	22K	5%	1/10W
R699	1-216-182-00	RES-CHIP	220	5%	1/8W
R701	1-216-182-00	RES-CHIP	220	5%	1/8W
R703	1-216-182-00	RES-CHIP	220	5%	1/8W
R705	1-216-182-00	RES-CHIP	220	5%	1/8W
R707	1-216-182-00	RES-CHIP	220	5%	1/8W
R709	1-216-182-00	RES-CHIP	220	5%	1/8W

Ref. No.	Part No.	Description	Remark
		< ROTARY ENCODER >	
S660	1-418-632-11	ENCODER, ROTARY (MASTER VOLUME)	
		< SWITCH >	
SW601	1-786-289-11	SWITCH, DETECTION (⏮ – EQ + ⏭)	
**********			
		MISCELLANEOUS	
		**********	
6	1-400-285-11	F-BEAD, E2515MRT	
7	1-769-940-11	WIRE (FLAT TYPE) (11 CORE)	
52	1-796-485-51	DECK, MECHANICAL	
53	1-769-975-11	WIRE (FLAT TYPE) (13 CORE)	
54	1-773-048-11	WIRE (FLAT TYPE) (17 CORE)	
⚠207	1-783-531-12	CORD, POWER (GX750/RX550)	
⚠207	1-783-941-22	CORD, POWER (RG551:AR)	
⚠207	1-777-071-83	CORD, POWER (RG551:E51)	
⚠207	1-827-226-21	CORD, POWER (RG551:E2,E3,MX)	
252	1-776-182-11	WIRE (FLAT TYPE) (5 CORE)	
301	1-471-035-11	MAGNET ASSY	
⚠328	8-820-244-01	OPTICAL PICK-UP (KSM-215DCP/C2RP)	
329	1-827-992-11	WIRE (FLAT TYPE) (16 CORE)	
330	1-775-251-11	WIRE (FLAT TYPE) (27 CORE)	
⚠F904	1-533-454-12	FUSE, GLASS TUBE (DIA.5) (6.3A/125V)	(GX750/RX550)
⚠F904	1-576-655-12	FUSE, GLASS TUBE (DIA.5) (T8AL/250V)	(RG551)
⚠F905	1-533-454-12	FUSE, GLASS TUBE (DIA.5) (6.3A/125V)	(GX750/RX550)
⚠F905	1-576-655-12	FUSE, GLASS TUBE (DIA.5) (T8AL/250V)	(RG551)
⚠F906	1-533-451-12	FUSE, GLASS TUBE (DIA.5) (3.15A/125V)	(GX750/RX550)
⚠F906	1-533-470-12	FUSE, GLASS TUBE (DIA.5) (T3.15AL/250V)	(RG551)
⚠F907	1-533-451-12	FUSE, GLASS TUBE (DIA.5) (3.15A/125V)	(GX750/RX550)
⚠F907	1-533-470-12	FUSE, GLASS TUBE (DIA.5) (T3.15AL/250V)	(RG551)
⚠F908	1-576-537-12	FUSE, GLASS TUBE (DIA.5) (8A/125V)	(GX750/RX550)
⚠F909	1-576-537-12	FUSE, GLASS TUBE (DIA.5) (8A/125V)	(GX750/RX550)
FAN901	1-763-117-13	FAN, DC	
FC901	1-469-854-11	CORE, FERRITE	
M741	A-4723-963-A	MOTOR ASSY, TABLE (TBL)	
M751	A-4736-655-A	MOTOR ASSY, LOADING (LOADING)	
⚠PT901	1-443-237-11	TRANSFORMER, POWER (RG551:E2,E3,E51,AR)	
⚠PT901	1-443-253-11	TRANSFORMER, POWER (GX750/RX550)	
⚠PT901	1-443-284-11	TRANSFORMER, POWER (RG551:MX)	
RE701	1-477-680-12	ENCODER, ROTARY	
S101	1-771-853-11	SWITCH, DETECTION (LIMIT)	
TM901	1-693-615-11	TUNER PACK (FM/AM) (ANTENNA) (RG551)	
TM901	1-693-631-11	TUNER PACK (FM/AM) (ANTENNA) (RX550)	
TM901	1-693-655-11	TUNER PACK (FM/AM) (ANTENNA) (GX750)	

The components identified by mark ⚠ or dotted line with mark ⚠ are critical for safety. Replace only with part number specified.	Les composants identifiés par une marque ⚠ sont critiques pour la sécurité. Ne les remplacer que par une piéce portant le numéro spécifié.

MEMO

REVISION HISTORY

Clicking the version allows you to jump to the revised page.
Also, clicking the version at the upper on the revised page allows you to jump to the next revised page.

Ver.	Date	Description of Revision
1.0	2004. 04	New