S	4,5, 28,29, 3, 3a, 27, 6, 7,8,9, 10, 11, 12,13,14,15, 16, 19,18,20,21,17, 22,23,24,26, 1a,1b,1c,1g,1e,2,24,25	S
C	52,33,54,49,50,56,5,55,4,5, 10,8, 11, 13, 12,9,7, 14,17,18,16,19,15, 20,22,24, 23,25,21,53, 26, 27,29,47,31,32,28,30,35,36,34,38,37,39,2,41,40,42,1,43,3,48, 44, 45, 51	C
R	2, 3, 4, 5, 6, 27, 8, 26, 9,10, 11,12,13, 14,15,15a,16, 1, 18, 19, 17, 20,21,22,23,24,25,	R

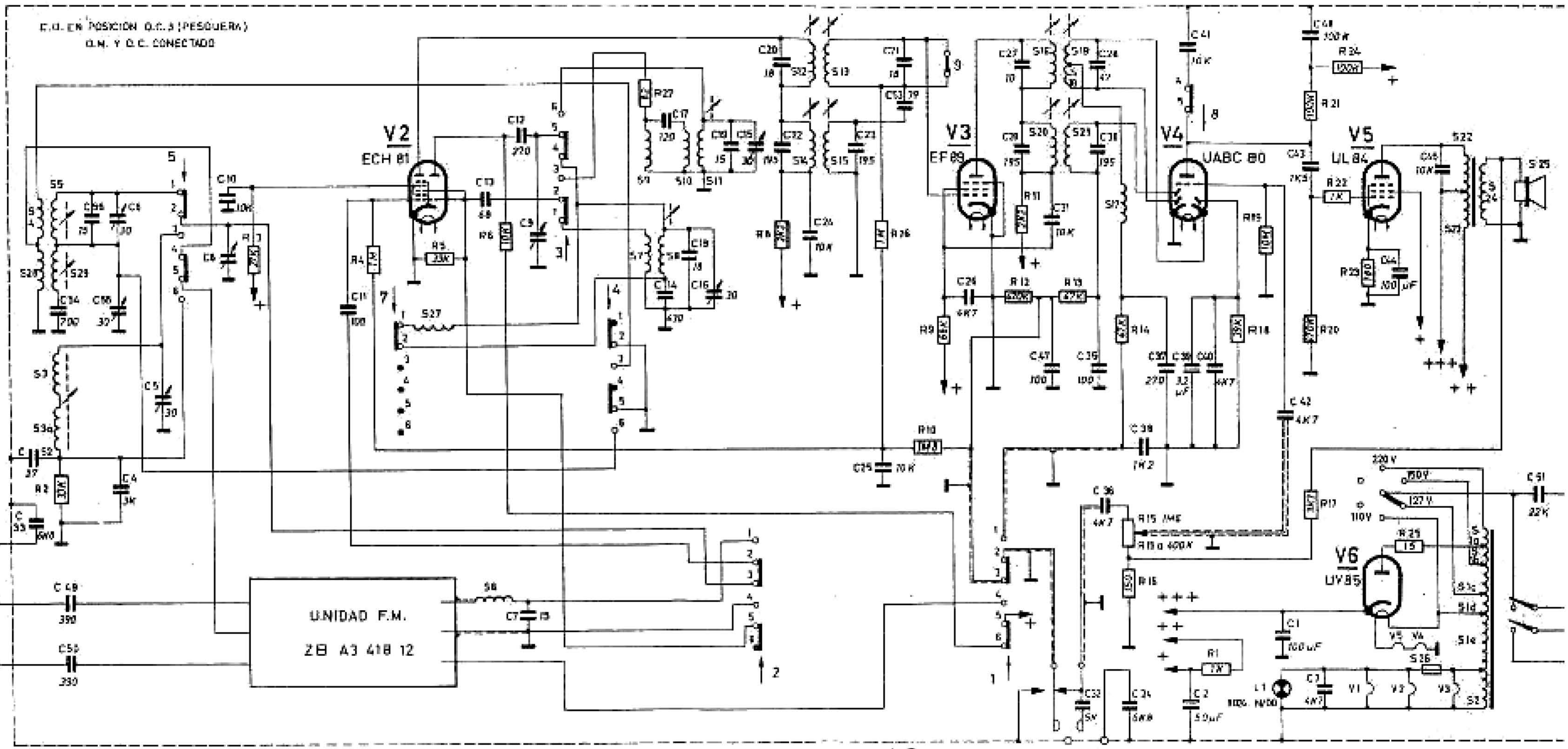

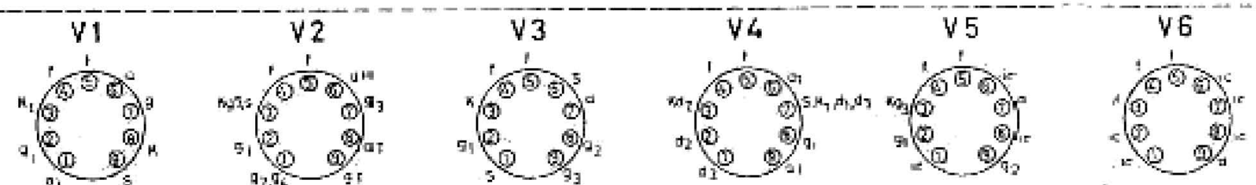

	PESQUERA			
PULSADOR	1	2	3	6
GALLETA	1, 2, 9	3, 4	5, 7	6
FUNCION	F.M.	O.M.	O.C.	TONO

B3E 15-A