HCD-EC59

SERVICE MANUAL

E Model

Ver. 1.0 2010.06

- HCD-EC59 is the amplifier, USB, CD player and tuner section in MHC-EC59.

- MPEG Layer-3 audio coding technology and patents licensed from Fraunhofer IIS and Thomson.
- Windows Media is either a registered trademark or trademark of Microsoft Corporation in the United States and/or other countries.
- This product is protected by certain intellectual property rights of Microsoft Corporation. Use or distribution of such technology outside of this product is prohibited without a license from Microsoft or an authorized Microsoft subsidiary.

Model Name Using Similar Mechanism	HCD-EX6/EX6T
Base Unit Name	BU-D1BD74UR
Optical Pick-up Block Name	DA11MMVGP

SPECIFICATIONS

Main unit

Amplifier section

The following measured at AC 127 V, 60 Hz (Mexican model)
The following measured at AC 220 V, 50/60 Hz (Argentine model)
The following measured at AC 120 V, 220 V, 240 V, 50/60 Hz (Other models)

Power output (rated):
25 W + 25 W (at 6 Ω, 1 kHz, 1% THD)
RMS output power (reference):
60 W + 60 W (per channel at 6 Ω, 1 kHz)

Inputs

PC IN (stereo mini jack):
Sensitivity 800 mV, impedance 22 kilohms

Outputs

PHONES (stereo mini jack):
accepts headphones with an impedance of 8 Ω or more
SPEAKERS: impedance: 6 Ω

USB section

Supported bit rate:
MP3 (MPEG 1 Audio Layer-3):
32 kbps – 320 kbps, VBR
WMA: 48 kbps – 192 kbps
AAC: 48 kbps – 320 kbps
Sampling frequencies:
MP3 (MPEG 1 Audio Layer-3):
32/44.1/48 kHz
WMA: 44.1 kHz
AAC: 44.1 kHz
(USB) port:
Maximum current:
500 mA

CD player section

System:
Compact disc and digital audio system
Laser Diode Properties
Emission Duration: Continuous
Laser Output*: Less than 44.6μW
* This output is the value measurement at a distance of 200mm from the objective lens surface on the Optical Pick-up Block with 7mm aperture.
Frequency response: 20 Hz – 20 kHz
Signal-to-noise ratio: More than 90 dB
Dynamic range: More than 88 dB

Tuner section

FM stereo, FM/AM superheterodyne tuner
Antenna:
FM lead antenna
AM loop antenna

FM tuner section:
Tuning range:
87.5 MHz – 108.0 MHz (50 kHz step)
Intermediate frequency: 225 kHz

AM tuner section:
Tuning range
Latin American models:
530 kHz – 1,710 kHz (10 kHz step)
531 kHz – 1,710 kHz (9 kHz step)
Other models:
531 kHz – 1,602 kHz (9 kHz step)
530 kHz – 1,610 kHz (10 kHz step)
Intermediate frequency: 53 kHz

General

Power requirements
Mexican model:
AC 127 V,60 Hz
Argentine model:
AC 220 V,50/60 Hz
Other models:
AC 120 V,220 V or 230 V 240 V, 50/60 Hz, adjustable with voltage selector
Power consumption: 85 W
(0.5 Wat the Power Saving Mode)
Dimensions (W/H/D) (excl. speakers)
Approx. 200 mm × 306 mm × 305 mm
Mass (excl. speakers): Approx. 3.8 kg

Design and specifications are subject to change without notice.

- Standby power consumption: 0.5 W
- Halogenated flame retardants are not used in the certain printed wiring boards.

COMPACT DISC RECEIVER

9-889-885-01
2010F05-1

© 2010.06

Sony Corporation
Audio&Video Business Group
Published by Sony Techno Create Corporation

SONY®

NOTES ON CHIP COMPONENT REPLACEMENT

- Never reuse a disconnected chip component.
- Notice that the minus side of a tantalum capacitor may be damaged by heat.

FLEXIBLE CIRCUIT BOARD REPAIRING

- Keep the temperature of soldering iron around 270 °C during repairing.
- Do not touch the soldering iron on the same conductor of the circuit board (within 3 times).
- Be careful not to apply force on the conductor when soldering or unsoldering.

CAUTION
Use of controls or adjustments or performance of procedures other than those specified herein may result in hazardous radiation exposure.

CLASS 1 LASER PRODUCT
LUOKAN 1 LASERLAITE
KLASS 1 LASERAPPARAT

This appliance is classified as a CLASS 1 LASER product. This marking is located on the rear exterior.

SAFETY-RELATED COMPONENT WARNING!

COMPONENTS IDENTIFIED BY MARK ⚠ OR DOTTED LINE WITH MARK ⚠ ON THE SCHEMATIC DIAGRAMS AND IN THE PARTS LIST ARE CRITICAL TO SAFE OPERATION. REPLACE THESE COMPONENTS WITH SONY PARTS WHOSE PART NUMBERS APPEAR AS SHOWN IN THIS MANUAL OR IN SUPPLEMENTS PUBLISHED BY SONY.

TABLE OF CONTENTS

1. SERVICING NOTES 3

2. DISASSEMBLY
2-1. Disassembly Flow 6
2-2. Side Panel (L)/(R) 7
2-3. Top Panel Assy 7
2-4. Front Panel Block 8
2-5. Knob (VOL) 8
2-6. MAIN Board 9
2-7. Base Unit (BU-D1BD74UR) 10
2-8. Optical Pick-up Block (DA11MMVGP) 10

3. TEST MODE 11

4. ELECTRICAL CHECKS 13

5. DIAGRAMS
5-1. Printed Wiring Board - CD Section - 18
5-2. Schematic Diagram - CD Section - 19
5-3. Printed Wiring Board - USB Section - 20
5-4. Schematic Diagram - USB Section - 21
5-5. Printed Wiring Boards - MAIN Section - 22
5-6. Schematic Diagram - MAIN Section - 23
5-7. Printed Wiring Boards - 2CH AMP/USB-JACK/JACK Boards - 24
5-8. Schematic Diagram - 2CH AMP/USB-JACK/JACK Boards - 25
5-9. Printed Wiring Board - PANEL Board - 26
5-10. Schematic Diagram - PANEL Board - 27
5-11. Printed Wiring Board - PT-SWITCH Board - 28
5-12. Schematic Diagram - PT-SWITCH Board - 29

6. EXPLODED VIEWS
6-1. Overall Section 32
6-2. Front Panel Section 33
6-3. Chassis Section 34
6-4. Top Panel Section 35

7. ELECTRICAL PARTS LIST 36

Accessories are given in the last of the electrical parts list.

SECTION 1
SERVICING NOTES

NOTES ON HANDLING THE OPTICAL PICK-UP BLOCK OR BASE UNIT

The laser diode in the optical pick-up block may suffer electrostatic break-down because of the potential difference generated by the charged electrostatic load, etc. on clothing and the human body. During repair, pay attention to electrostatic break-down and also use the procedure in the printed matter which is included in the repair parts.
The flexible board is easily damaged and should be handled with care.

NOTES ON LASER DIODE EMISSION CHECK

The laser beam on this model is concentrated so as to be focused on the disc reflective surface by the objective lens in the optical pickup block. Therefore, when checking the laser diode emission, observe from more than 30 cm away from the objective lens.

UNLEADED SOLDER

Boards requiring use of unleaded solder are printed with the lead-free mark (LF) indicating the solder contains no lead.
(**Caution:** Some printed circuit boards may not come printed with the lead free mark due to their particular size)

: LEAD FREE MARK

Unleaded solder has the following characteristics.

- Unleaded solder melts at a temperature about 40 °C higher than ordinary solder.
  Ordinary soldering irons can be used but the iron tip has to be applied to the solder joint for a slightly longer time.
  Soldering irons using a temperature regulator should be set to about 350 °C.
  Caution: The printed pattern (copper foil) may peel away if the heated tip is applied for too long, so be careful!
- Strong viscosity
  Unleaded solder is more viscous (sticky, less prone to flow) than ordinary solder so use caution not to let solder bridges occur such as on IC pins, etc.
- Usable with ordinary solder
  It is best to use only unleaded solder but unleaded solder may also be added to ordinary solder.

MODEL IDENTIFICATION
- Back Panel -

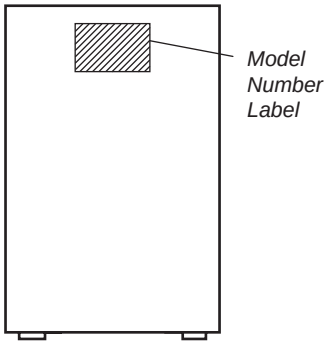

Model	Part No.
Argentina model	4-184-199-0□
Mexican model	4-184-200-0□
African model	4-184-201-0□
120V AC area in E model, Chilean and Peruvian models	4-187-950-0□

LASER DIODE AND FOCUS SEARCH OPERATION CHECK

During normal operation of the equipment, emission of the laser diode is prohibited unless the upper lid is closed while turning on the SW305 (push switch type).
The following checking method for the laser diode is operable.

- **Method**
  Emission of the laser diode is visually checked.
  1. Open the upper lid.
  2. Push the SW305 as shown in Fig. 1.
  Note: Do not push the detection lever strongly, or it may be bent or damaged.
  3. Check the object lens for confirming normal emission of the laser diode. If not emitting, there is a trouble in the automatic power control circuit or the optical pick-up.
     In this operation, the object lens will move up and down 2 times along with inward motion for the focus search.

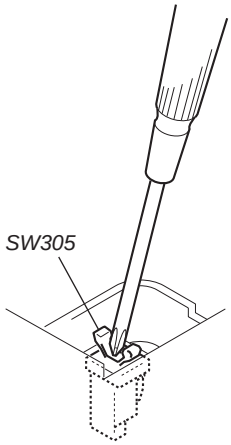

Fig. 1. Method to push the SW305

CAPACITOR ELECTRICAL DISCHARGE PROCESSING

When checking the board, the electrical discharge is necessary for the electric shock prevention.
Connect the resistors referring to the figure below.

- **MAIN board (C622, C626)**
  Both ends of respective capacitors.

– MAIN Board (Conductor Side) –

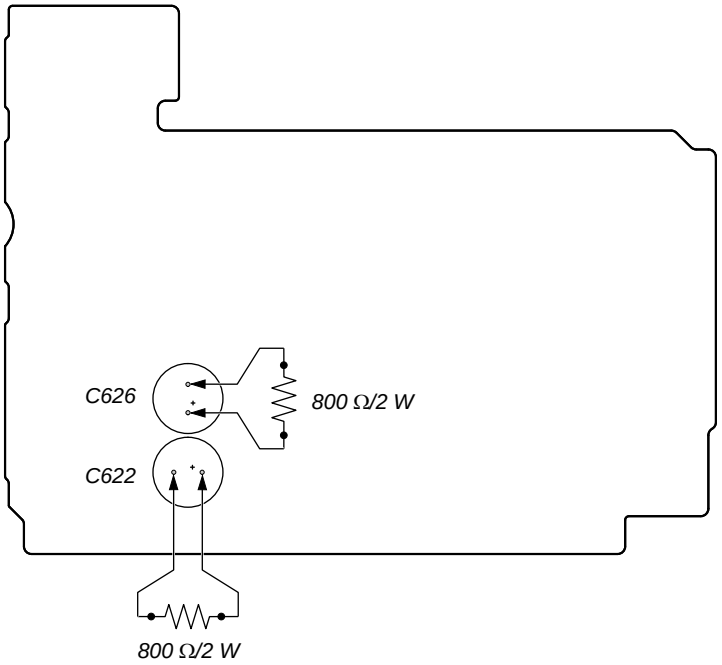

MAIN BOARD SERVICE POSITION

- SIDE PANEL (L) was removed.

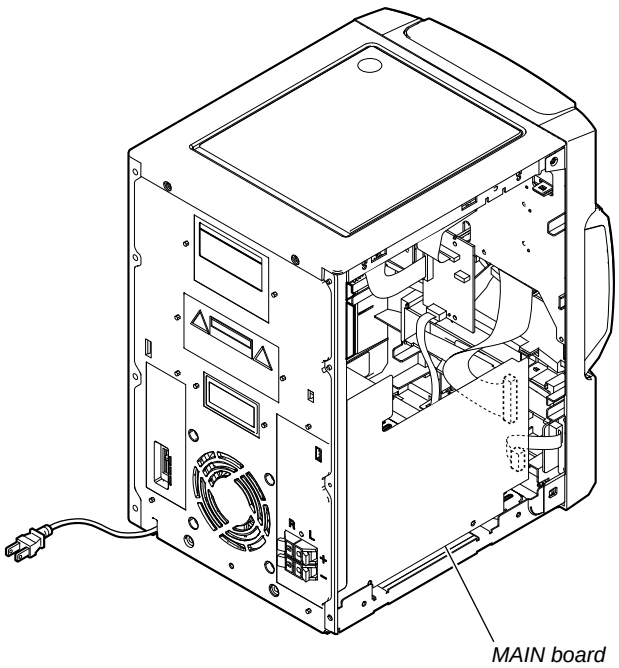

– Rear side view –

PT-SWITCH BOARD SERVICE POSITION

- SIDE PANEL (R) was removed.

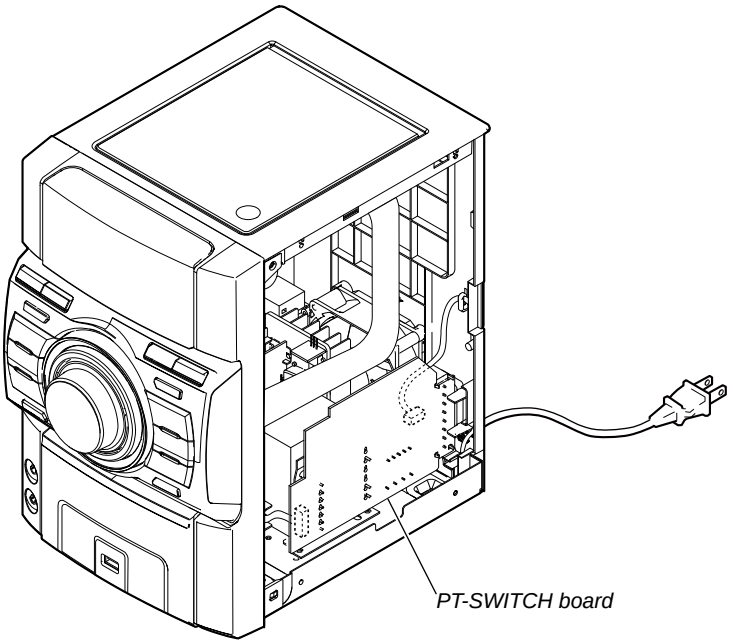

BD74UR BOARD SERVICE POSITION

- SIDE PANEL (L) and (R) are removed, and the set is laid.

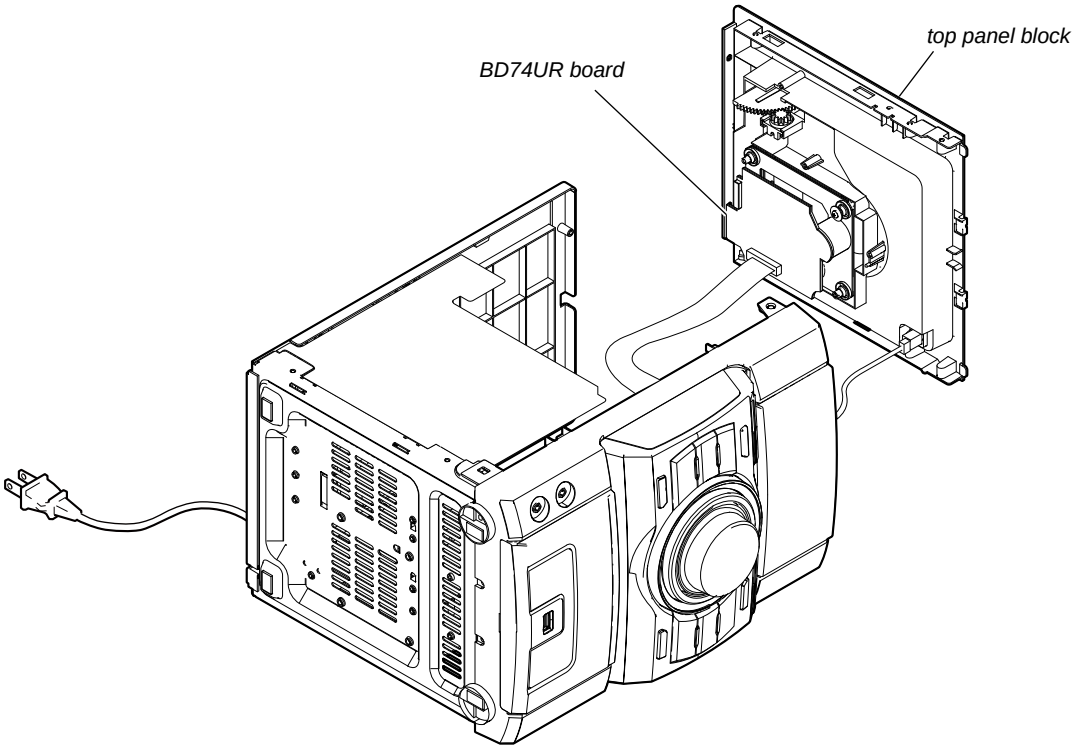

SECTION 2
DISASSEMBLY

- This set can be disassembled in the order shown below.

2-1. DISASSEMBLY FLOW

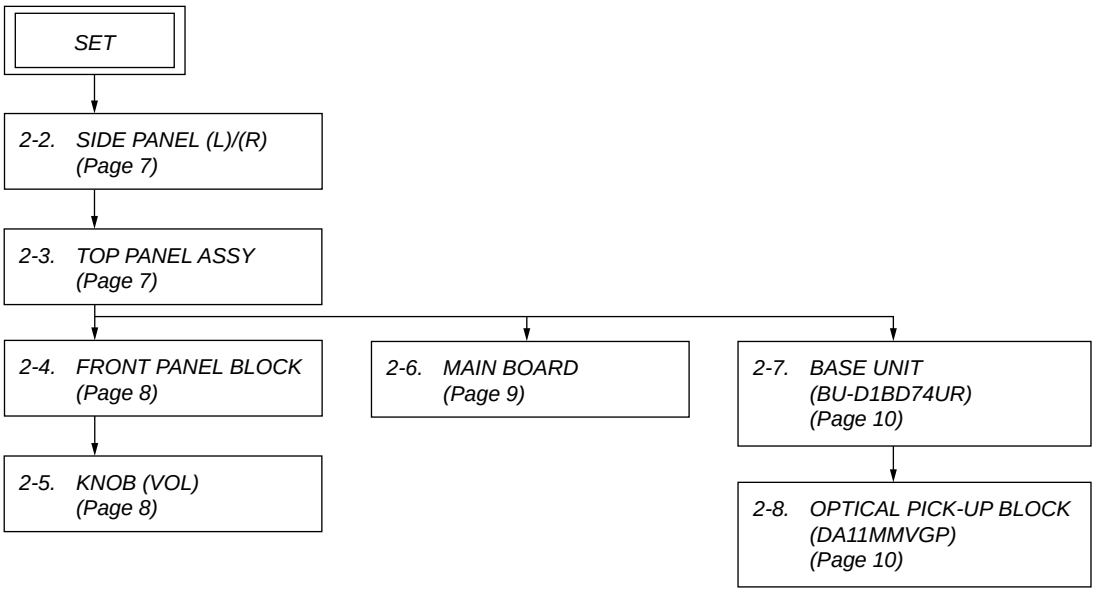

Note: Follow the disassembly procedure in the numerical order given.

2-2. SIDE PANEL (L)/(R)

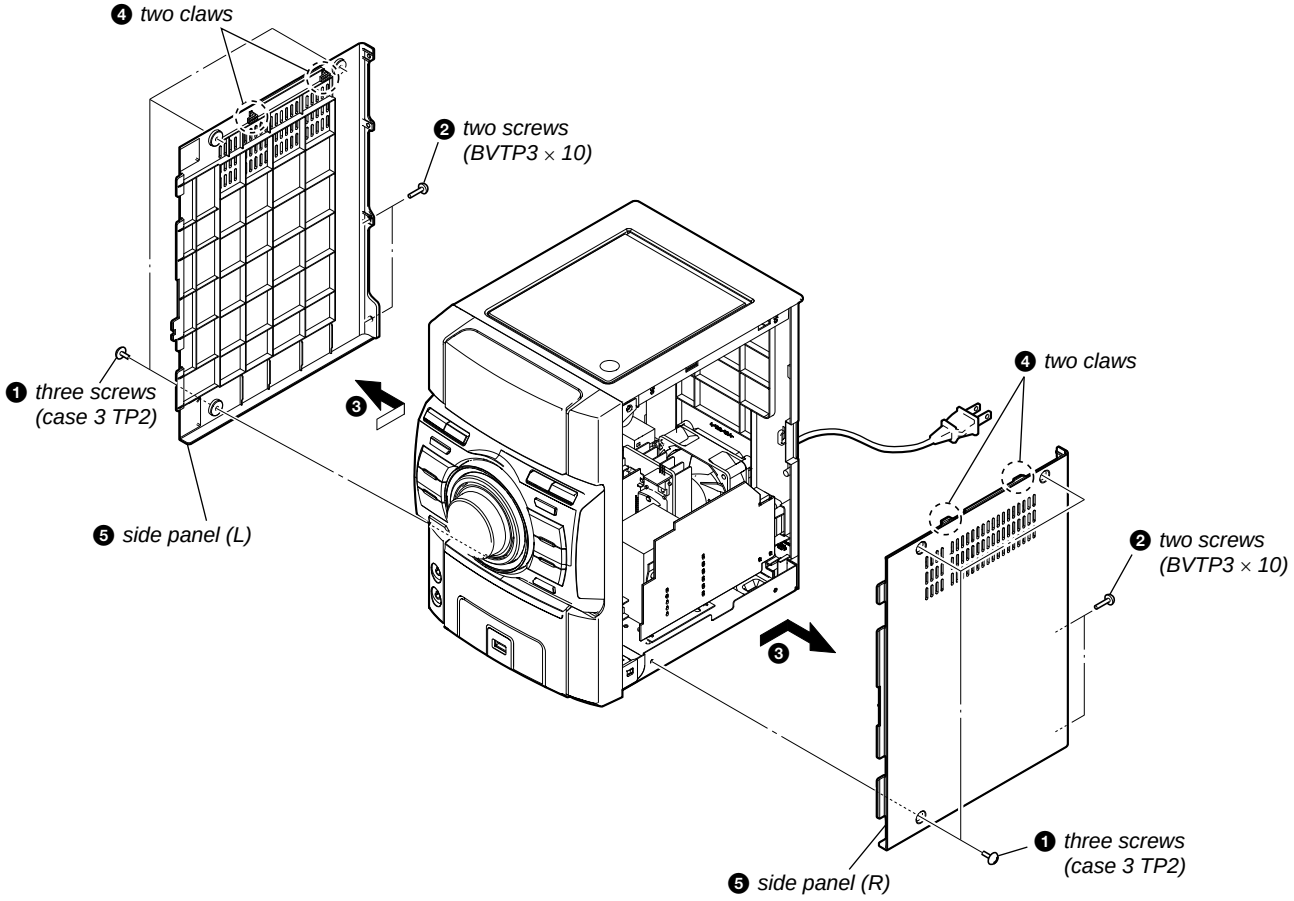

2-3. TOP PANEL ASSY

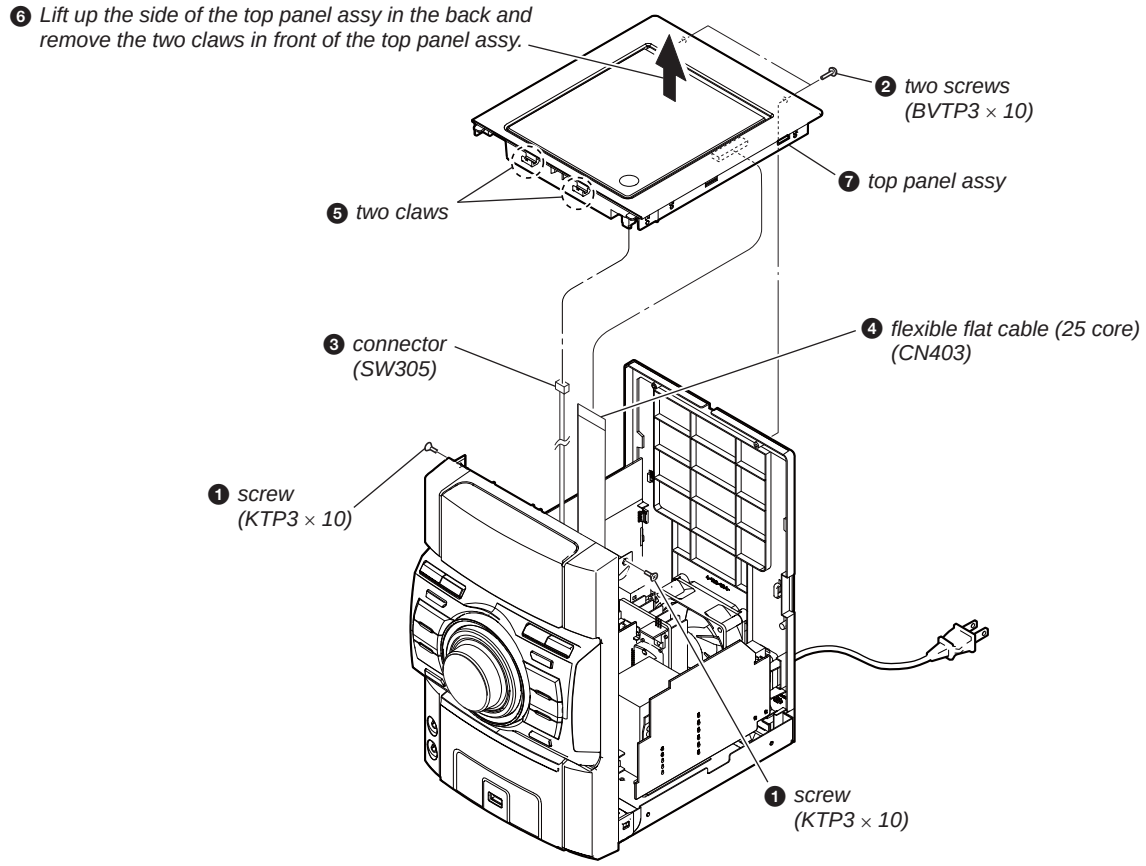

2-4. FRONT PANEL BLOCK

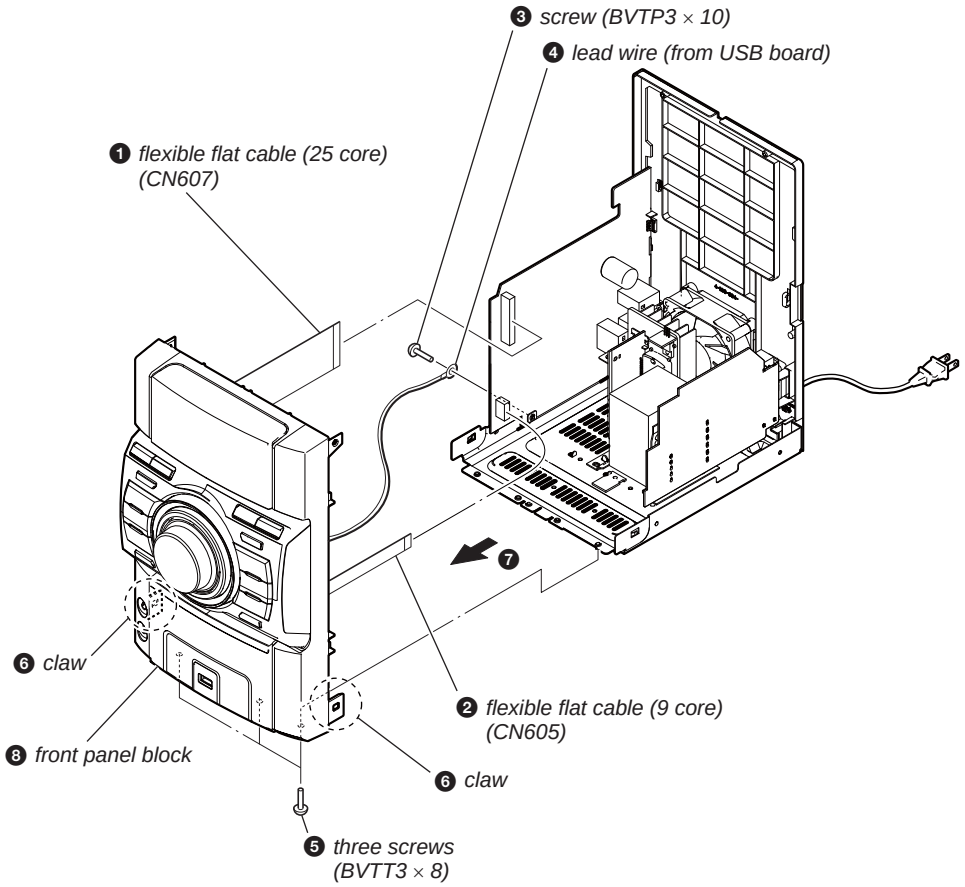

2-5. KNOB (VOL)

Note: This illustration sees the front panel block from PANEL board side.

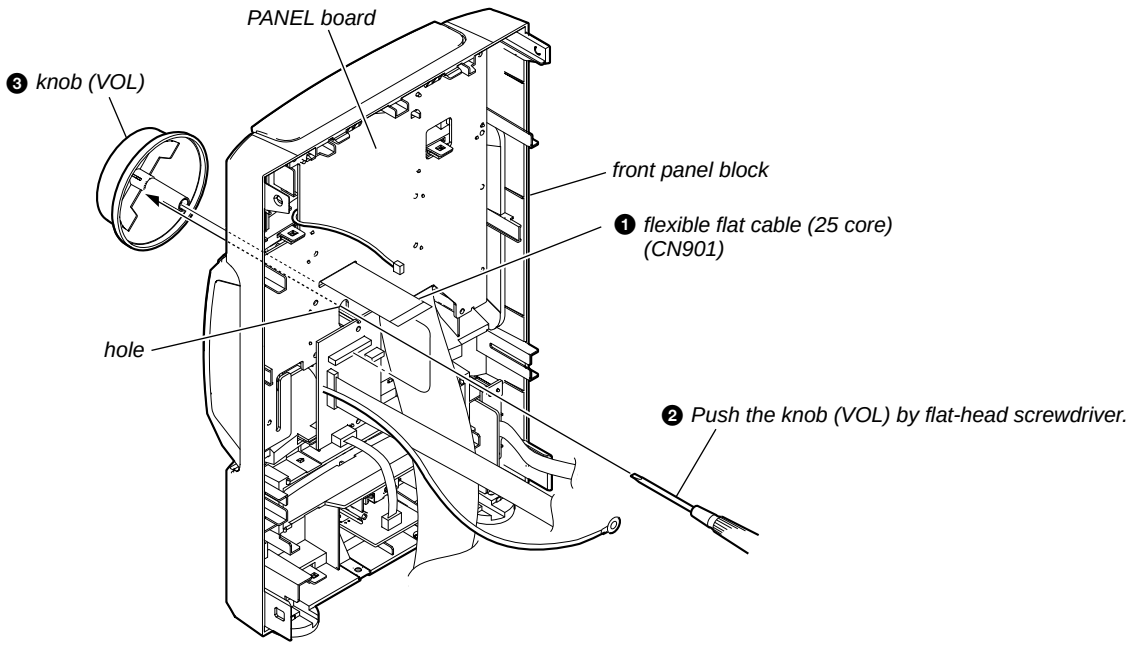

2-6. MAIN BOARD

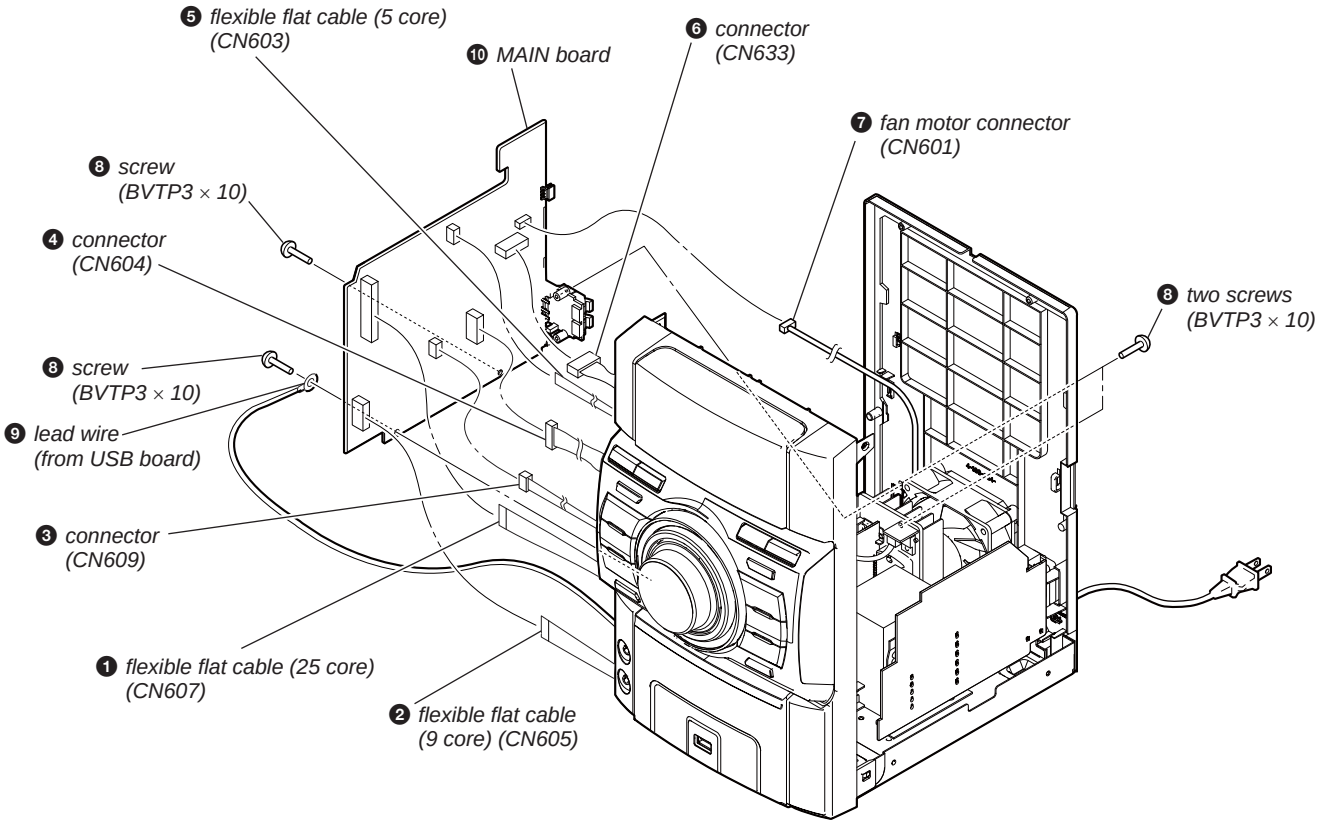

• ***Wire setting***

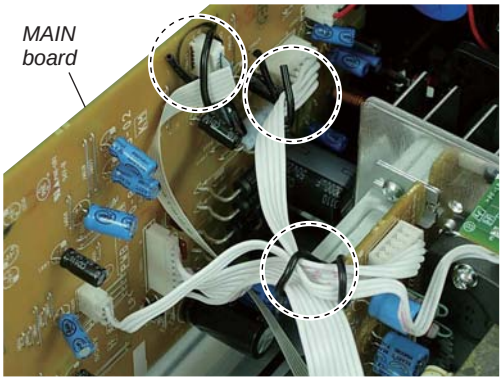

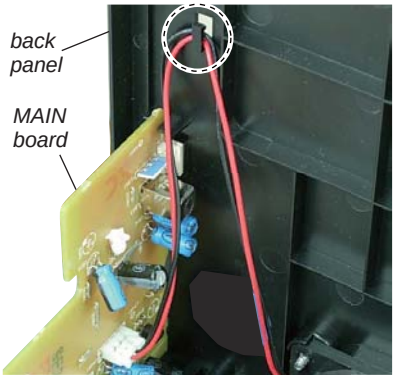

2-7. BASE UNIT (BU-D1BD74UR)

Note 1: This illustration sees the top panel assy from base unit side.

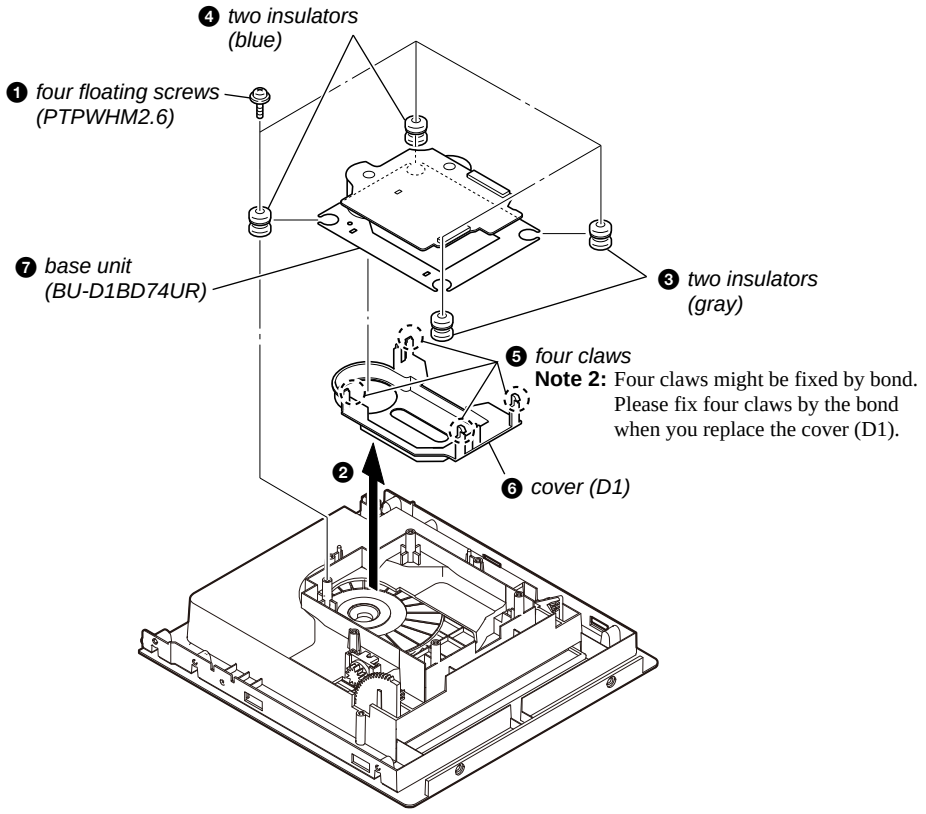

2-8. OPTICAL PICK-UP BLOCK (DA11MMVGP)

Note 1: When disconnecting the wire (flat type) (16 core) of optical pick-up block, solder the short-land.

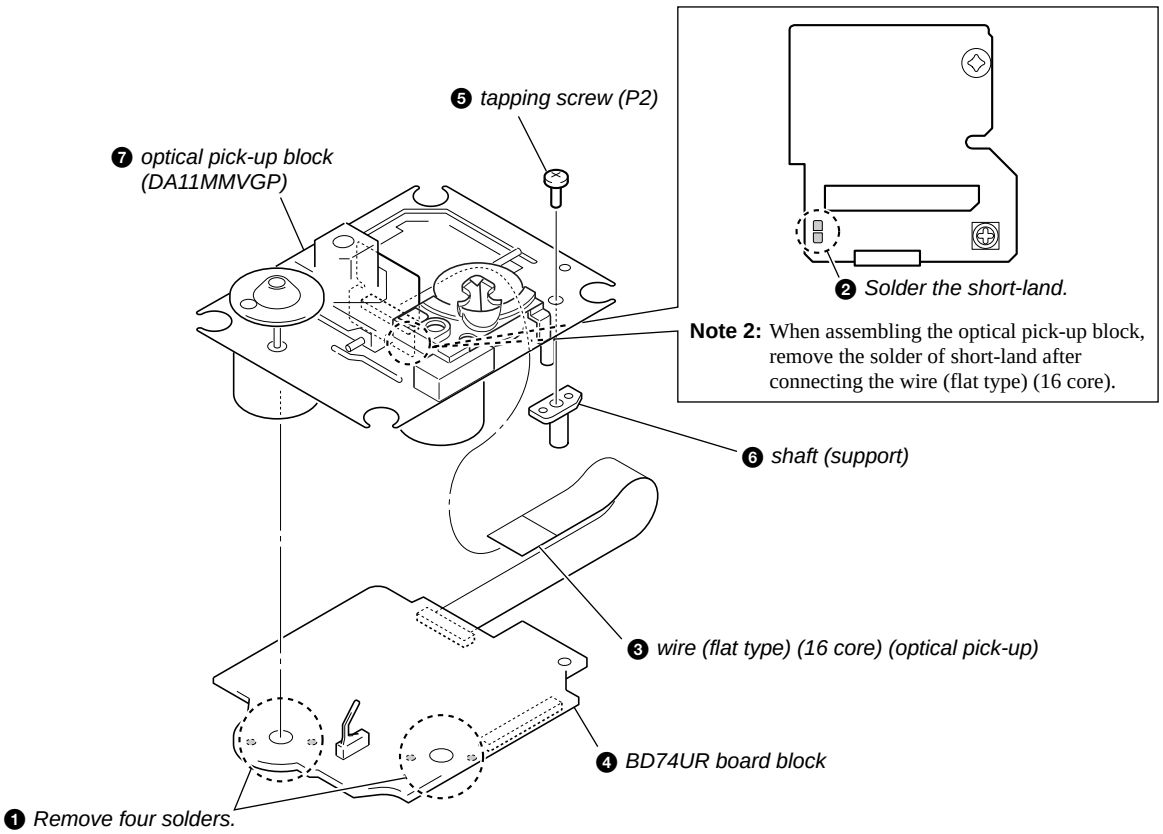

SECTION 3
TEST MODE

COLD RESET

The cold reset clears all data including preset data stored in the memory to initial conditions. Execute this mode when returning the set to the customer.

Procedure:

1. In the standby status, press the [I/⏻] button to turn the power on.
2. Press three buttons of [■], [FUNCTION] and [I/⏻] simultaneously.
3. When "RESET" appears, the set enters standby status.

PANEL TEST MODE

Enter The Panel Test Mode

Procedure:

1. In the standby status, press the [I/⏻] button to turn the power on.
2. Press three buttons of [DSGX], [■] and [I/⏻] simultaneously.
3. When the panel test mode is activated, LEDs and segments of the liquid crystal display are all turned on.

Version Check

Procedure:

1. In the panel test mode (all LEDs and segments of the liquid crystal display are turned on), press the [FUNCTION] button.
2. On the liquid crystal display, date and version are displayed "xxxxxxxx".
3. From this status, press the [▶II] button, and the destination and model name are displayed.
4. To release from this mode, press three buttons of [DSGX], [■] and [I/⏻] simultaneously.

Key Test Mode

Procedure:

1. In the panel test mode (all LEDs and segments of the liquid crystal display are turned on), press the [■] button.
2. The message "KEY0 0 0" displayed. Whenever any buttons are pressed, the value is changed.
3. To release from this mode, press three buttons of [DSGX], [■] and [I/⏻] simultaneously.

CD POWER MANAGE

This mode is for switch the CD power supply on/off. Even if this state pulls out AC plug, it is held.

Procedure:

1. Press the [I/⏻] button to turn the power on.
2. Press the [FUNCTION] button to select CD function.
3. Press the [I/⏻] button again to turn the power off (standby).
4. After pressing the [DISPLAY] button, while pressing the [■] button, press the [I/⏻] button.
5. It turns power on and display "CD/USB", then display "PWR ON" or "PWR OFF".

CHANGE-OVER THE AM TUNING INTERVAL

The AM tuning interval can be changed over 9 kHz or 10 kHz.

Procedure:

1. Press the [I/⏻] button to turn the power on.
2. Press the [FUNCTION] button to select TUNER AM function.
3. Press the [I/⏻] button again to turn the power off (standby).
4. After pressing the [DISPLAY] button, while pressing the [TUNING + ▶▶ ▷▷I] button, press the [I/⏻] button.
5. It turns power on and display "9k STEP" or "10k STEP", and thus the tuning interval is changed over.

CD SERVICE MODE

This mode can move the SLED of the optical pick-up, and also can turn the optical pick-up laser power on and off.

Procedure:

1. Press the [I/⏻] button to turn the power on.
2. Press three buttons of [▶II], [ENTER] and [I/⏻] simultaneously.
3. Press the [FUNCTION] button to select CD function.
4. It enters the CD service mode and displays "SERVICE".
5. To release from this mode, press three buttons of [▶II], [ENTER] and [I/⏻] simultaneously.

Key Operation:

[TUNING + ▶▶ ▷▷I], [– TUNING I◁◁ ◀◀]:

Use these keys to move the SLED. When [TUNING + ▶▶ ▷▷I] is pressed in this mode, the SLED moves to outer circumference and the message "SLED OUT" is displayed.
When [– TUNING I◁◁ ◀◀] is pressed in this mode, the SLED moves to inner circumference and the message "SLED IN" is displayed.

[CD]:

Use this key to turn the optical pick-up laser power on and off. When the laser power is turned on, the message "LD ON" is displayed. When the laser power is turned off, the message "LD OFF" is displayed.

CD FACTORY MODE

Note 1: Do not enter the this mode while any other test mode is in progress.

Note 2: Do not enter any other test mode while the this mode is in progress.

Procedure:

1. Press the [I/⏻] button to turn the power on.
2. Press the [FUNCTION] button to select CD function
3. Press three buttons of [▶II], [USB] and [I/⏻] simultaneously.
4. It enters the CD factory mode and the message "FACTORY" is displayed. When the [CD] button is pressed, the following message (initial display) is displayed.

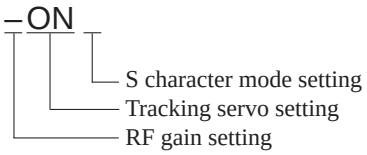

Key Operation:

[CD]:

The display changes in the following order whenever the button is pressed.

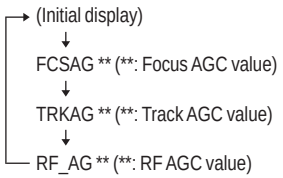

[DSGX]:

RF gain setting changes whenever the button is pressed.
"–": No gain fixation.
"AL": Fix to the gain for AL disc.
"RW": Fix to the gain for RW disc.

[FUNCTION]:

S character mode setting changes whenever the button is pressed.
" ": S character mode OFF.
"S": S character mode ON.

5. To release from this mode, press three buttons of [▶II], [USB] and [I/⏻] simultaneously.

SECTION 4
ELECTRICAL CHECKS

CD SECTION

Note:
1. CD Block is basically constructed to operate without adjustment.
2. Use YEDS-18 disc (Part No. 3-702-101-01) unless otherwise indicated.
3. Use an oscilloscope with more than 10 MΩ impedance.
4. Clean the object lens by an applicator with neutral detergent when the signal level is low than specified value with the following checks.
5. Check the focus bias check when optical pick-up block is replaced.

FOCUS BIAS CHECK

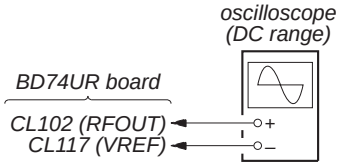

Procedure :
1. Connect the oscilloscope to CL102 (RFOUT) and CL117 (VREF) on the BD74UR board.
2. Press the [I/⏻] button to turn the power on, and press the [FUNCTION] button to select CD function.
3. Set disc (YEDS-18) and press the [▶II] button to playback.
4. Confirm that oscilloscope waveform is as shown in the figure below (eye pattern).
   A good eye pattern means that the diamond shape (◊) in the center of the waveform can be clearly distinguished.

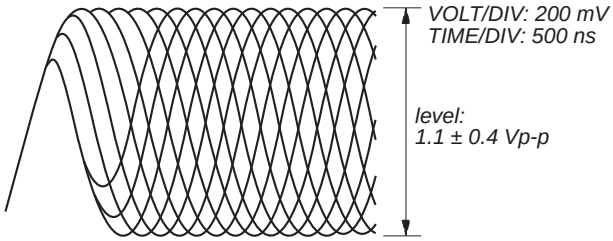

Checking Location:

– BD74UR Board (Conductor Side) –

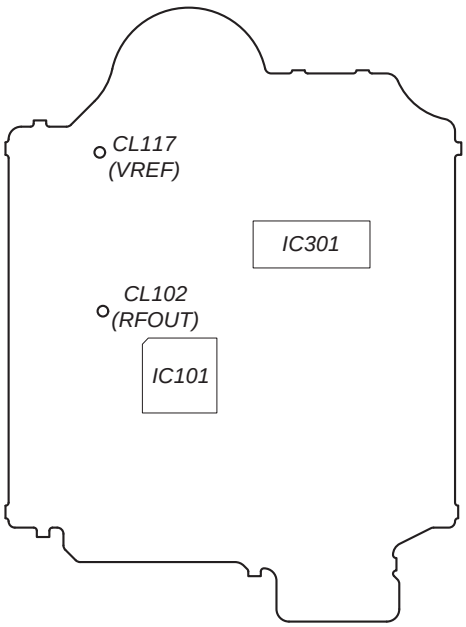

TUNER SECTION

0 dB = 1 μV

FM AUTO STOP CHECK

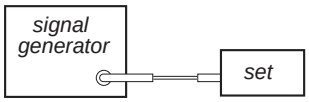

Procedure :
1. Turn the power on.
2. Input the following signal from Signal Generator to FM antenna input directly.

Carrier frequency : A = 87.5 MHz, B = 98 MHz, C = 108 MHz
Deviation : 75 kHz
Modulation : 1 kHz
ANT input : 35 dBu (EMF)

Note: Please use 75 ohm "coaxial cable" to connect SG and the set. You cannot use video cable for checking.
Please use SG whose output impedance is 75 ohm.

3. Set to FM tuner function and scan the input FM signal with automatic scanning.
4. Confirm that input Frequency of A, B and C detected and automatic scanning stops.

The stop of automatic scanning means "The station signal is received in good condition".

SECTION 5
DIAGRAMS

THIS NOTE IS COMMON FOR PRINTED WIRING BOARDS AND SCHEMATIC DIAGRAMS.
(In addition to this, the necessary note is printed in each block.)

For Printed Wiring Boards.

Note:

- ○——: parts extracted from the component side.
- ——: parts extracted from the conductor side.
- : indicates side identified with part number.
- : Pattern from the side which enables seeing.
  (The other layers' patterns are not indicated.)

Caution:	
Pattern face side: (Conductor Side)	Parts on the pattern face side seen from the pattern face are indicated.
Parts face side: (Component Side)	Parts on the parts face side seen from the parts face are indicated.

Caution:	
Pattern face side: (SIDE B)	Parts on the pattern face side seen from the pattern face are indicated.
Parts face side: (SIDE A)	Parts on the parts face side seen from the parts face are indicated.

- Indication of transistor.

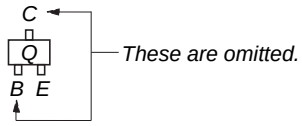

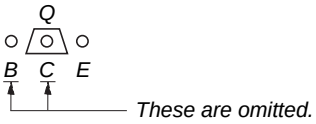

- Abbreviation
  AR : Argentina model
  E2 : 120V AC area in E model
  E4 : African model
  E51 : Chilean and Peruvian models
  MX : Mexican model

For Schematic Diagrams.

Note:

- All capacitors are in μF unless otherwise noted. (p: pF) 50 WV or less are not indicated except for electrolytics and tantalums.
- All resistors are in Ω and 1/4 W or less unless otherwise specified.
- △ : internal component.
- : nonflammable resistor.
- : panel designation.

Note: The components identified by mark ⚠ or dotted line with mark ⚠ are critical for safety.
Replace only with part number specified.

- : B+ Line.
- : B– Line.
- Voltages and waveforms are dc with respect to ground under no-signal (detuned) conditions.

– BD74UR Board –
no mark: CD PLAY
– Other Boards –
no mark: TUNER (FM/AM)

- Voltages are taken with VOM (Input impedance 10 MΩ). Voltage variations may be noted due to normal production tolerances.
- Waveforms are taken with a oscilloscope. Voltage variations may be noted due to normal production tolerances.
- Circled numbers refer to waveforms.
- Signal path.
  : TUNER (FM/AM)
  : CD PLAY
  : USB
  : PC IN
- Abbreviation
  AR : Argentina model
  E2 : 120V AC area in E model
  E4 : African model
  E51 : Chilean and Peruvian models
  MX : Mexican model

- **Circuit Boards Location**

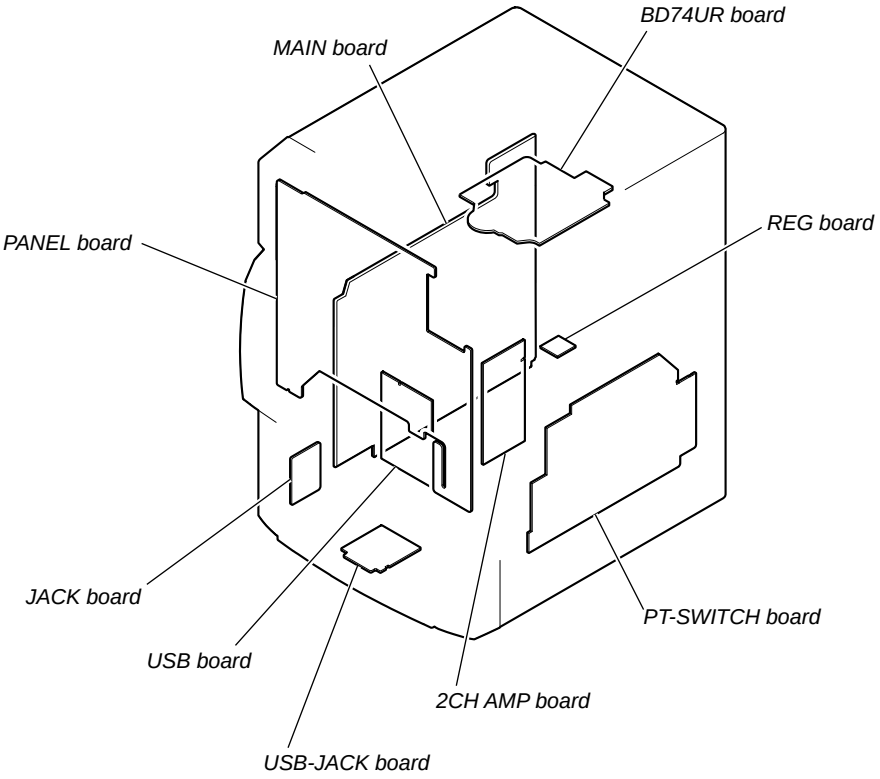

- **IC Pin Function Description**

USB BOARD IC901 LC87F1JJ2AU-SQFP-H (USB CONTROLLER)

Pin No.	Pin Name	I/O	Description
1	P73	I/O	Not used
2	RES	I	Reset signal input from the system controller "L": reset
3	XT1	I	Not used
4	XT2	O	Not used
5	VSS1	-	Ground terminal
6	CF1	I	Main system clock input terminal (12 MHz)
7	CF2	O	Main system clock output terminal (12 MHz)
8	VDD1	-	Power supply terminal (+3.3V)
9	SO0	O	Serial data output to the CD-MP3 processor
10	SI0	I	Serial data input from the CD-MP3 processor
11	SCK0	O	Serial data transfer clock signal output to the CD-MP3 processor
12	SO1	O	Serial data output terminal Not used
13	SI1	I	Serial data input terminal Not used
14	SCK1	O	Serial data transfer clock signal output terminal Not used
15	P16	I	Chip enable signal input from the CD-MP3 processor
16	P17	I/O	Not used
17	MCLKI	I	Master clock signal input terminal Not used
18	MCLKO	O	Master clock signal output terminal Not used
19	VDD2	-	Power supply terminal (+3.3V)
20	VSS2	-	Ground terminal
21, 22	P00, P01	I/O	Not used
23 to 25	DBGP0 to DBGP2	-	Debug terminal
26	SDAT	I	Serial data input from the CD-MP3 processor
27	BCLK	I	Bit clock signal input from the CD-MP3 processor
28	LRCK	I	L/R sampling clock signal input from the CD-MP3 processor
29, 30	P20, P21	I/O	Not used
31	P22	O	Audio serial data output to the CD-MP3 processor
32	P23	O	Request signal output to the CD-MP3 processor
33	P24	O	Audio serial data transfer clock signal output to the CD-MP3 processor
34 to 36	P25 to P27	I/O	Not used
37	UHD-	I/O	USB D- serial data input/output terminal
38	UHD+	I/O	USB D+ serial data input/output terminal
39	VDD3	-	Power supply terminal (+3.3V)
40	VSS3	-	Ground terminal
41	UFILT	-	PLL filter circuit connection terminal for USB interface Not used
42	AFILT	-	PLL filter circuit connection terminal for audio interface Not used
43	P32	I/O	Not used
44	URX1	I	USB RX signal input from the system controller
45	UTX1	O	USB TX signal output to the system controller
46	P70	I	Request signal input from the CD-MP3 processor
47	P71	I	Sleep control siganl input from the system controller
48	P72	I/O	Not used

PANEL BOARD IC301 MB90F831PF-G-SPE1 (SYSTEM CONTROLLER)

Pin No.	Pin Name	I/O	Description
1	SEG32	O	Segment drive signal output to the liquid crystal display
2	O-SP-RELAY-ON	O	Relay drive signal output terminal (for speaker)
3	O-POWER	O	Main power on/off control signal output terminal "H": main power on
4	O-5V-ON	O	CD and VBUS power on/off control signal output terminal "H": CD and VBUS power on
5, 6	NC	-	Not used
7	CDM-OPEN	I	Detection switch input from the CD lid open/close detect switch
8	NC	-	Not used
9	I-RMC	I	Remote control signal input from the remote control receiver
10 to 12	NC	-	Not used
13	X0A	I	Sub system clock input terminal (32.768 kHz)
14	X1A	O	Sub system clock output terminal (32.768 kHz)
15	VCC	-	Power supply terminal (+3.3V)
16	VSS	-	Ground terminal
17	O-CD-CE	O	Chip enable signal output to the CD-MP3 processor
18	O-CD-CL	O	Clock signal output to the CD-MP3 processor
19	I-CD-DI	I	Serial data input from the CD-MP3 processor
20	O-CD-DO	O	Serial data output for the CD-MP3 processor
21, 22	NC	-	Not used
23	O-CD-M-MUTE	O	CD motor drive on/off mute control signal output to the CD motor/coil driver
24	O-CD-RST	O	System reset signal output to the CD-MP3 processor "L": reset
25	NC	-	Not used
26	O-CD-ON	O	CD power on/off control signal output terminal "H": CD power on
27	NC	O	Not used
28	O-LED-LCD	O	LED drive signal output terminal for STANDBY indicater
29	I-USB-TXD	I	USB TX signal input from the USB controller
30	O-TP-REC-MUTE	I	Not used
31	O-USB-RXD	O	USB RX signal output to the USB controller
32	AVCC	-	Power supply terminal (+3.3V)
33	O-USB-SLEEP	O	Sleep control signal output to the USB controller
34	O-USB-RST	O	System reset signal output to the USB controller
35	AVSS	-	Ground terminal
36	I-P-MONI	I	Power monitor signal input terminal
37, 38	I-KEY1, I-KEY2	I	Front panel key input terminal (A/D input)
39	I-TU-ANSD	I	Auto gain control signal input terminal
40	I-5V/9V-DET	I	Power supply voltage detection signal input terminal
41	I-KEY-WAKE-UP/VOL	I	Front panel key wake-up signal input/volume control signal input terminal
42	I-HOLD	I	Not used
43	NC	-	Not used
44	GND	-	Ground terminal
45	NC	-	Not used
46	I-MODEL	I	Model setting terminal
47	I-SUFFIX	I	Destination x setting terminal
48	I-TU-DO	I	Serial data input from the AM/FM DET
49	O-I2C-FUNC-DATA	O	Serial data output to the electrical volume
50	O-I2C-FUNC-CLK	O	Serial data transfer clock signal output to the electrical volume
51	MD2	-	Not used
52	MD1	-	Not used
53	MD0	-	Not used
54	I-RST	I	Reset signal input from the voltage detect "L": reset
55	O-TU-CE	O	Chip enable signal output to the AM/FM DET
56	O-TU-DI	O	Serial data output to the AM/FM DET
57	O-TU-CLK	O	Serial data transfer clock signal output to the AM/FM DET
58	VLCD	-	Terminal for doubler circuit capacitor connection to develop liquid crystal display drive voltage
59 to 62	COM0 to COM3	O	Common drive signal output to the liquid crystal display
63, 64	SEG0, SEG1	O	Segment drive signal output to the liquid crystal display
65	VCC	-	Power supply terminal (+3.3V)
66	VSS	-	Ground terminal
67 to 89	SEG2 to SEG24	O	Segment drive signal output to the liquid crystal display

Pin No.	Pin Name	I/O	Description
90	VCC	-	Power supply terminal (+3.3V)
91	VSS	-	Ground terminal
92	X1	I	Main system clock input terminal (6 MHz)
93	X0	O	Main system clock output terminal (6 MHz)
94 to 100	SEG25 to SEG31	O	Segment drive signal output to the liquid crystal display

17

5-1. PRINTED WIRING BOARD - CD Section -

• See page 15 for Circuit Boards Location. • : Uses unleaded solder.

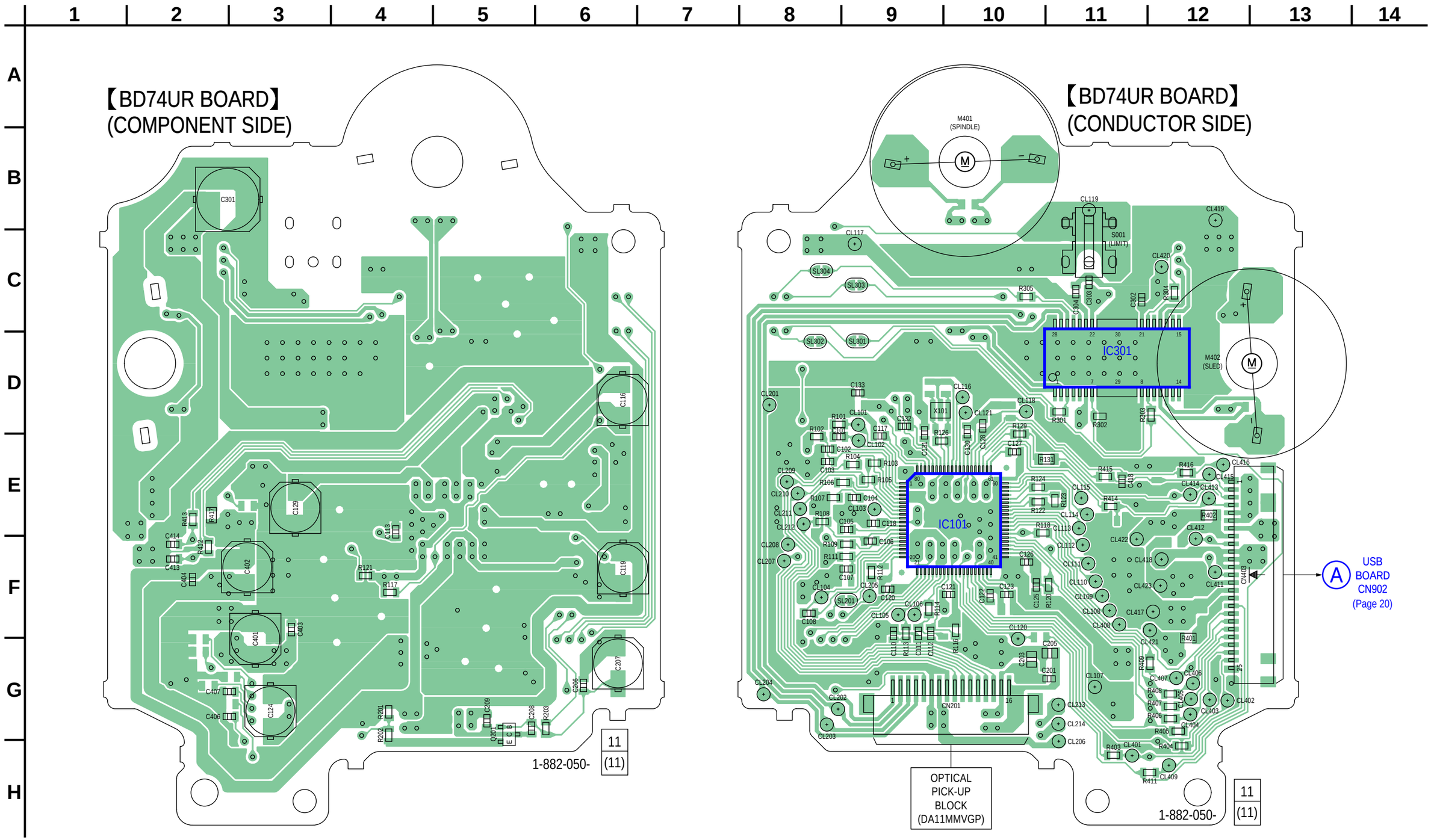

5-2. SCHEMATIC DIAGRAM - CD Section - • See page 24 for Waveforms. • See page 30 for IC Block Diagrams.

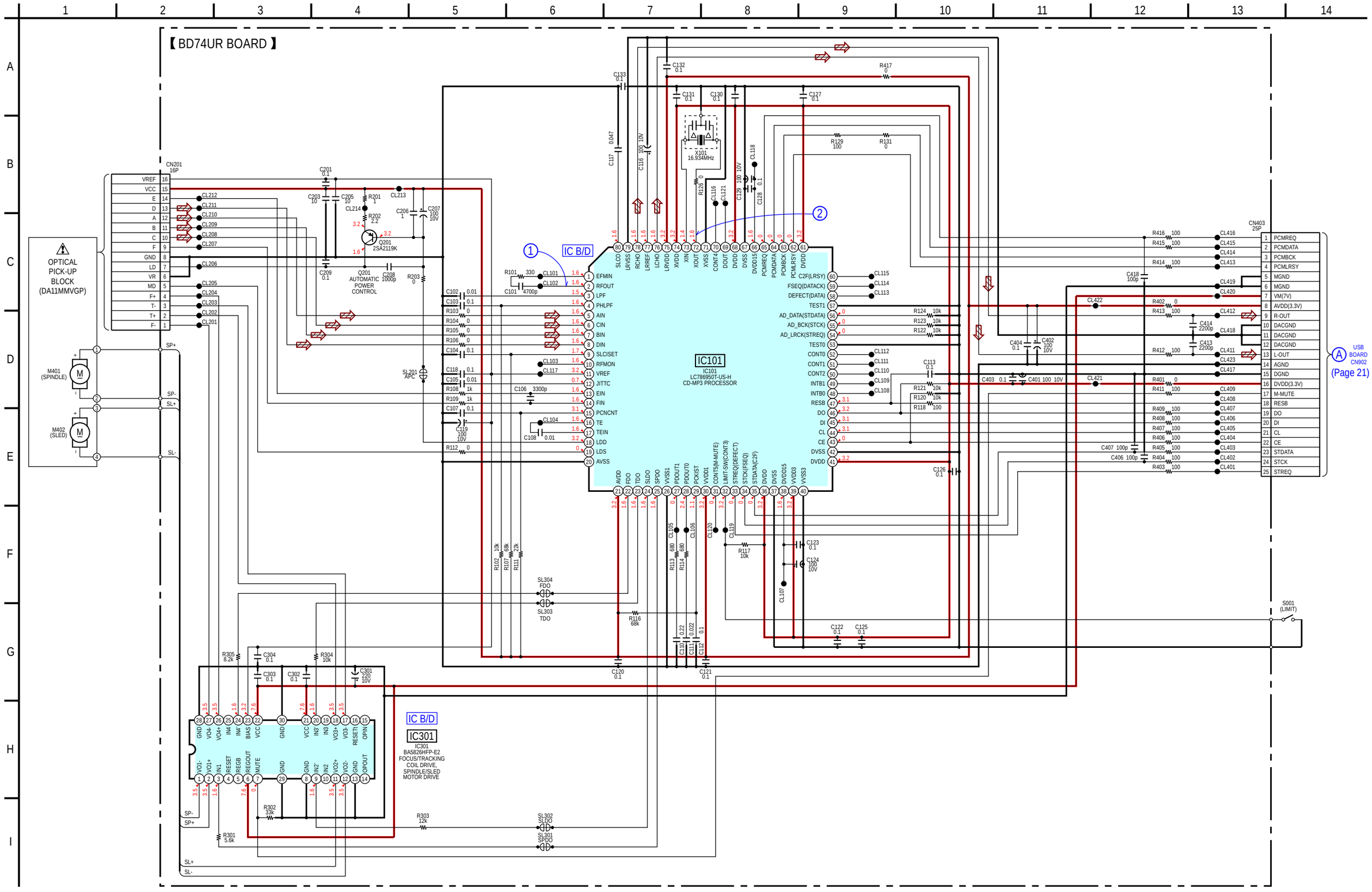

5-3. PRINTED WIRING BOARD - USB Section -

• See page 15 for Circuit Boards Location. • : Uses unleaded solder.

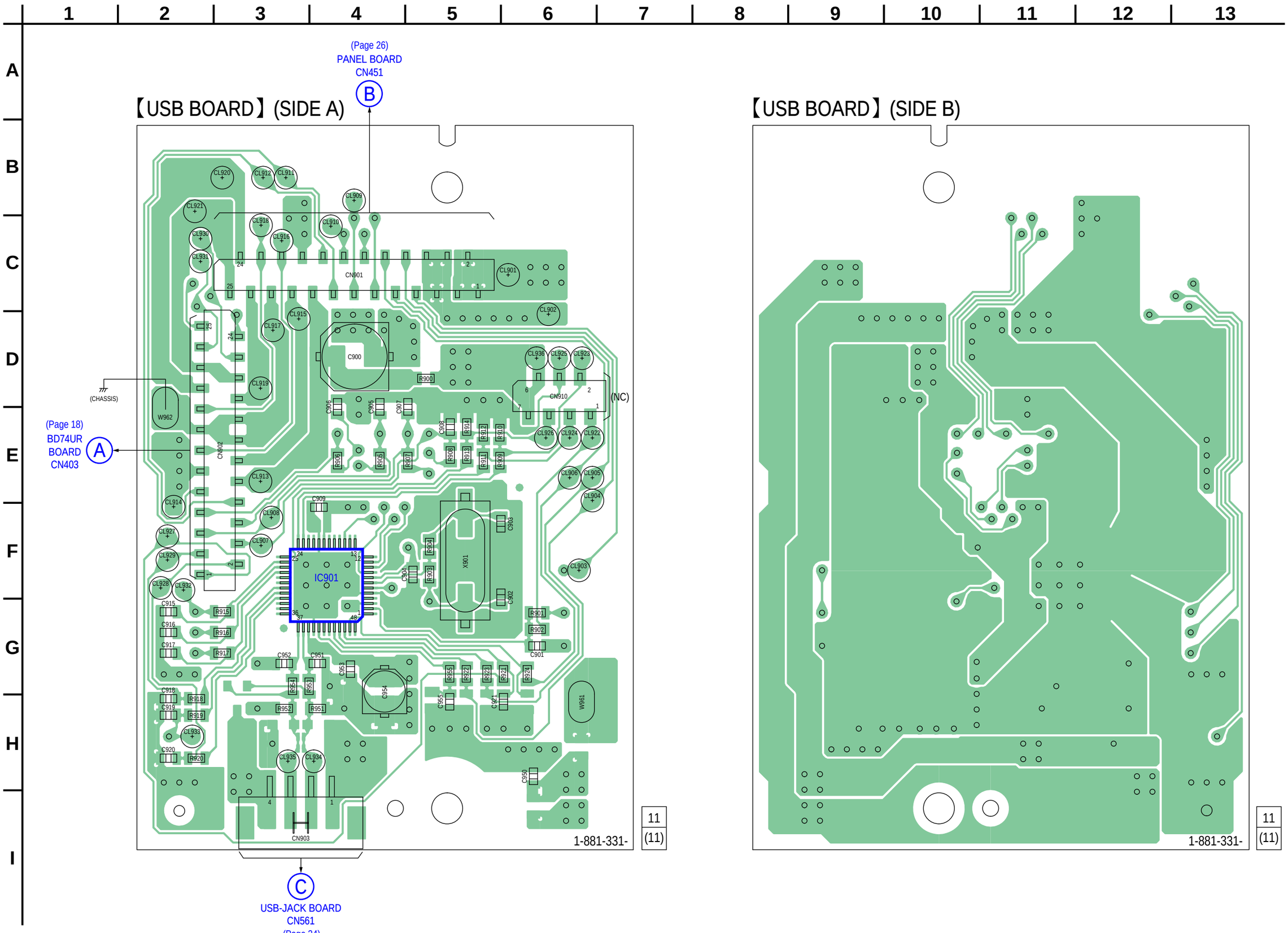

5-4. SCHEMATIC DIAGRAM - USB Section -

• See page 24 for Waveforms. • See page 16 for IC Pin Function Descriptions.

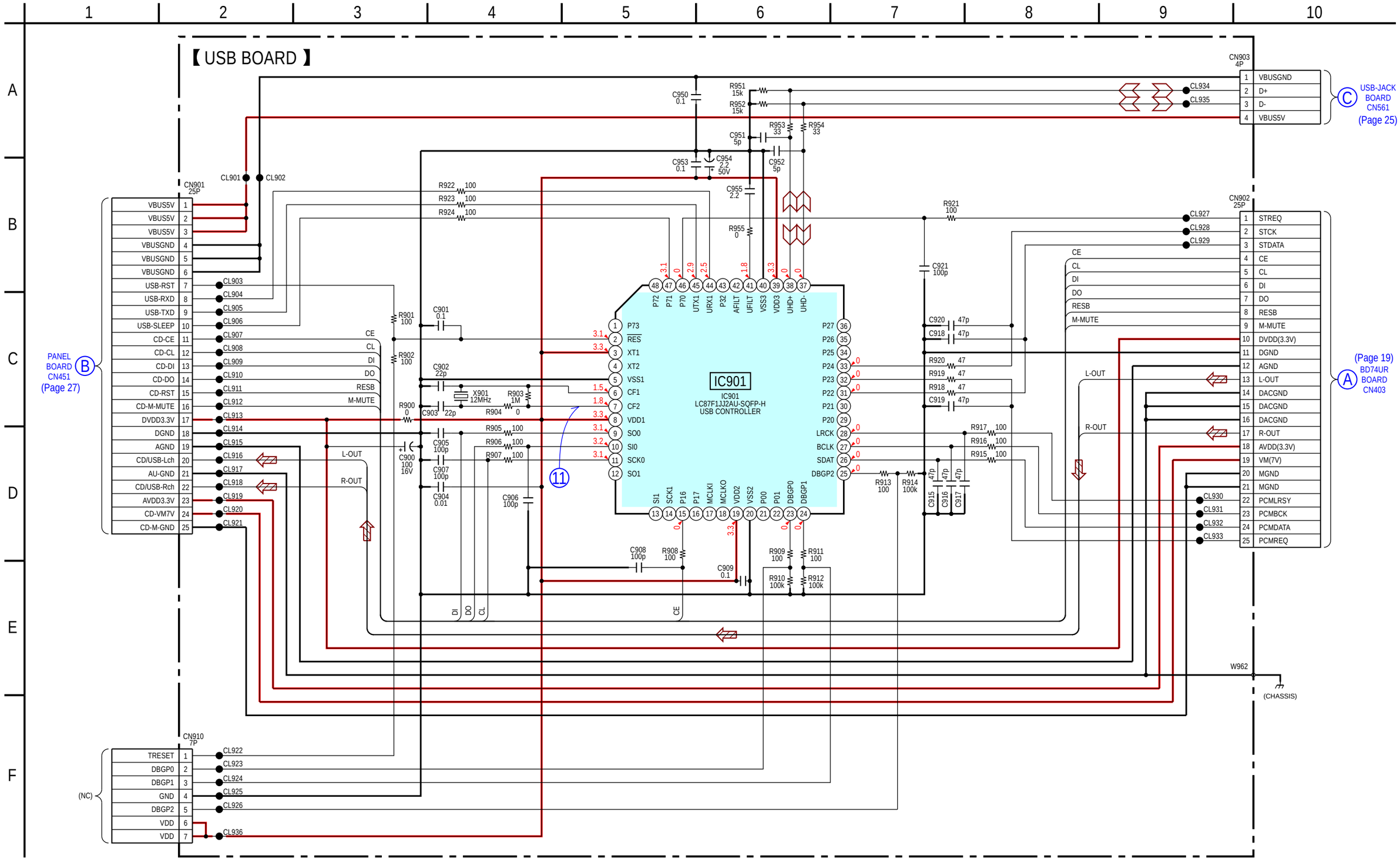

5-5. PRINTED WIRING BOARDS - MAIN Section -

• See page 15 for Circuit Boards Location. • : Uses unleaded solder.

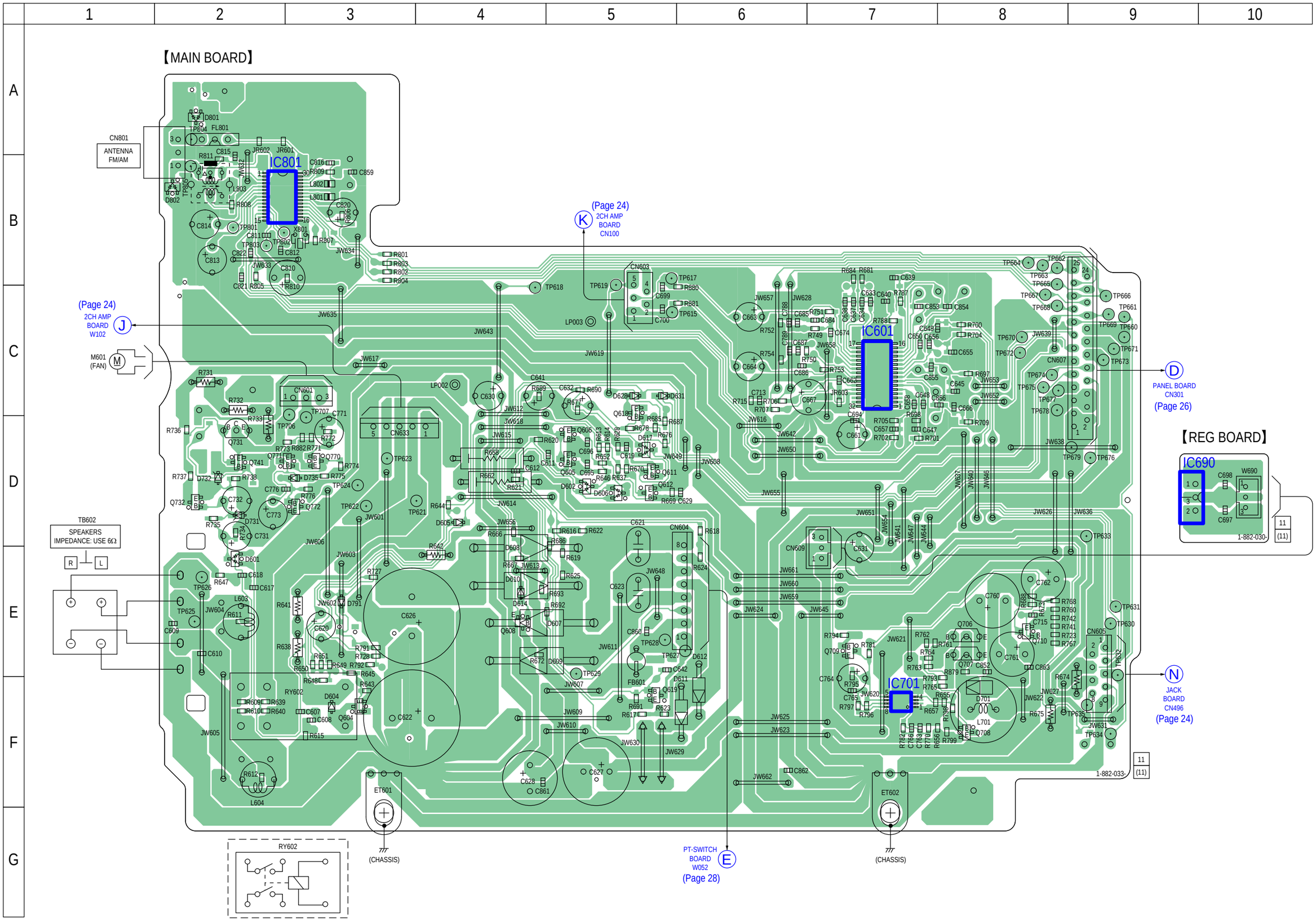

5-6. SCHEMATIC DIAGRAM - MAIN Section - • See page 24 for Waveforms. • See page 30 for IC Block Diagrams.

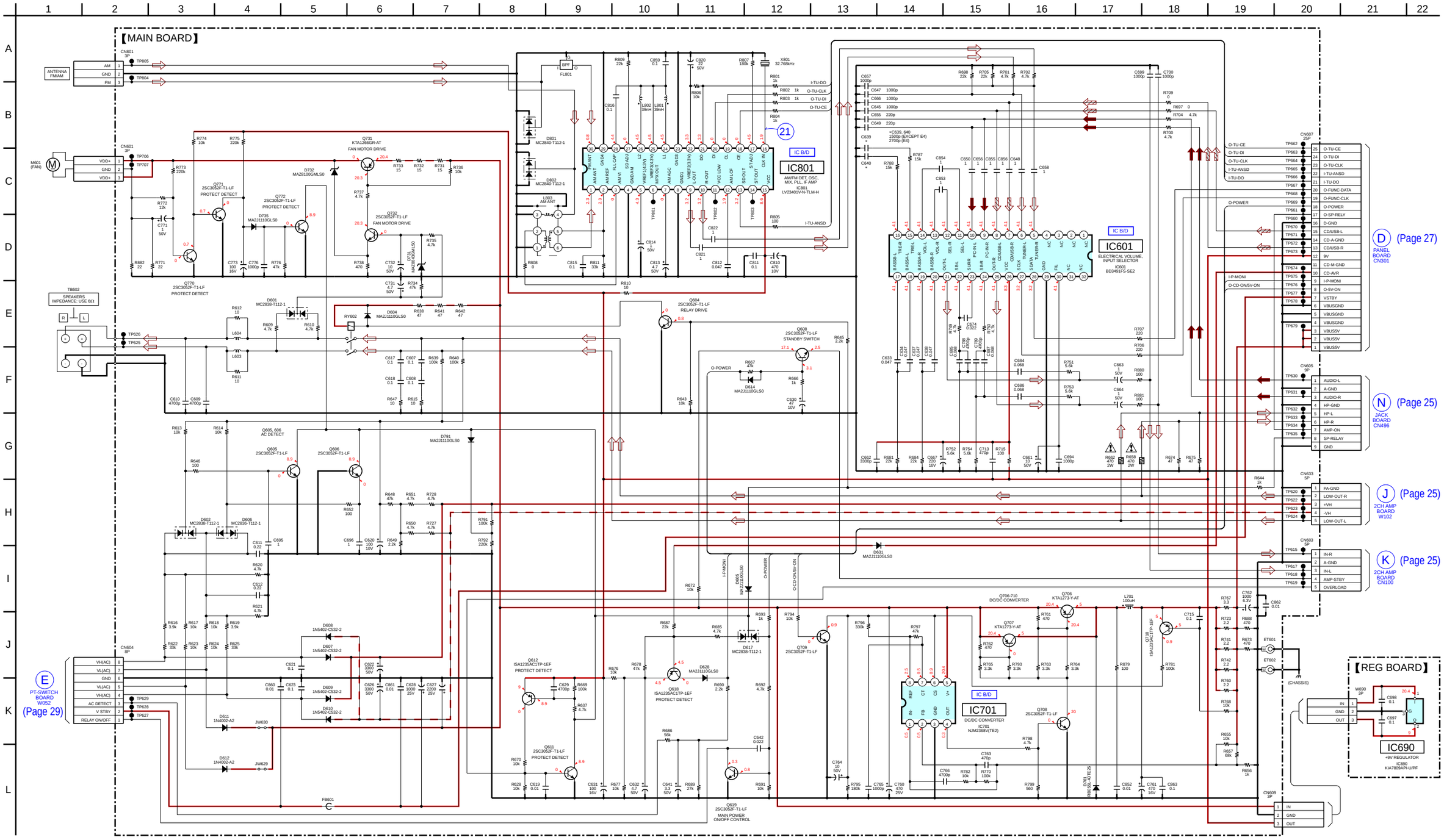

• **Waveforms**

– BD74UR Board –

① **IC101 ② (RFOUT) (CD play mode)**

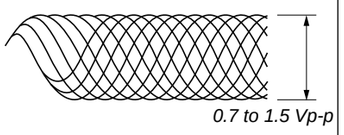

200 mV/DIV, 500 ns/DIV

② **IC101 ⑫ (XOUT)**

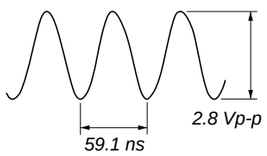

1 V/DIV, 20 ns/DIV

– USB Board –

⑪ **IC901 ⑦ (CF2)**

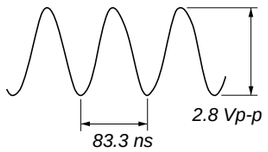

1 V/DIV, 20 ns/DIV

– MAIN Board –

㉑ **IC801 ⑯ (CLK IN)**

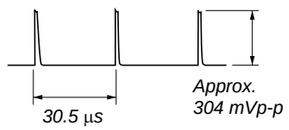

200 mV/DIV, 20 µs/DIV

– PANEL Board –

㉛ **IC301 ⑭ (X1A)**

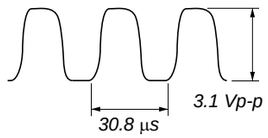

1 V/DIV, 20 µs/DIV

㉜ **IC301 ⑫ (X1)**

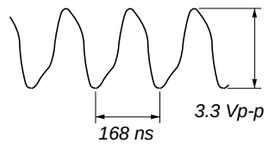

1 V/DIV, 100 ns/DIV

5-7. PRINTED WIRING BOARDS - 2CH AMP/USB-JACK/JACK Boards -

• See page 15 for Circuit Boards Location. • : Uses unleaded solder.

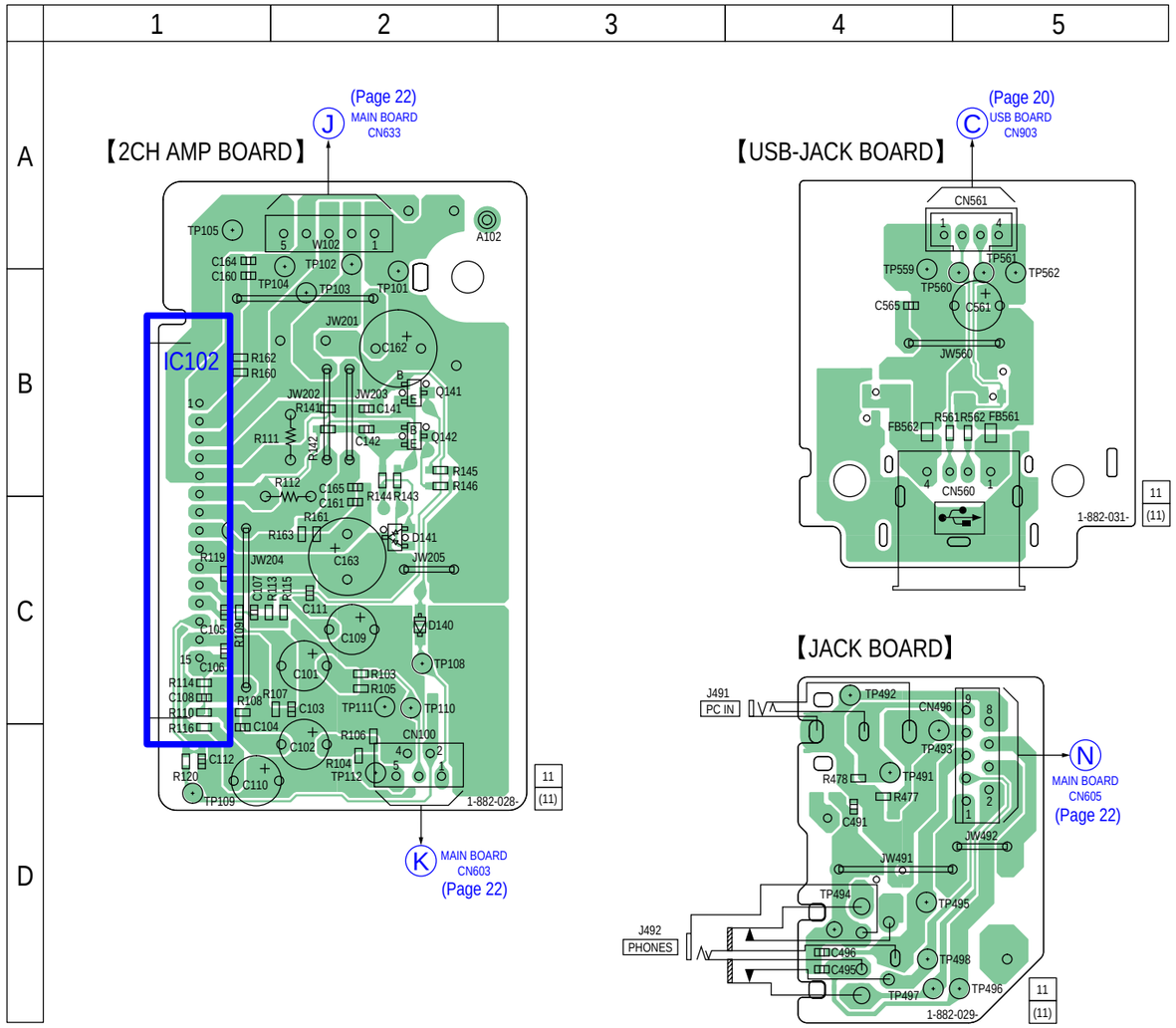

5-8. SCHEMATIC DIAGRAM - 2H AMP/USB-JACK/JACK Boards -

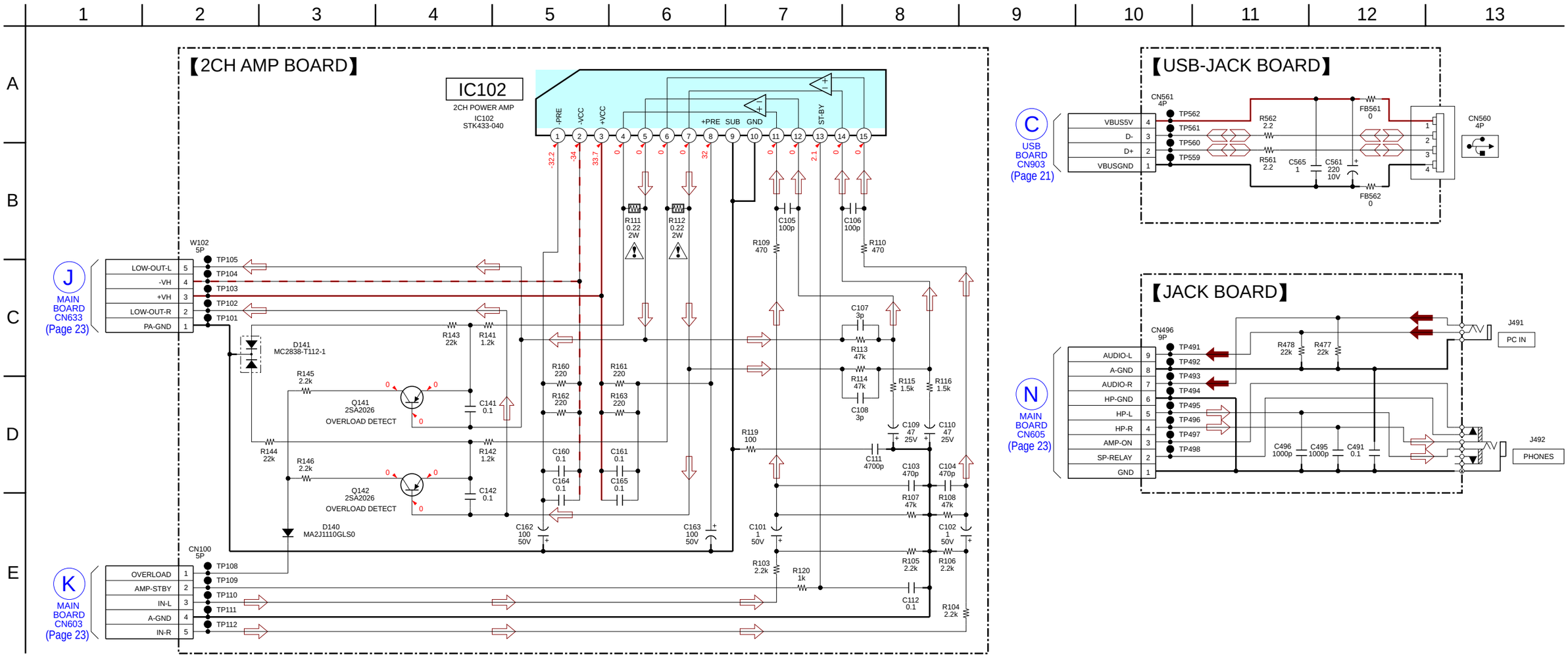

5-9. PRINTED WIRING BOARD - PANEL Board -

• See page 15 for Circuit Boards Location. • : Uses unleaded solder.

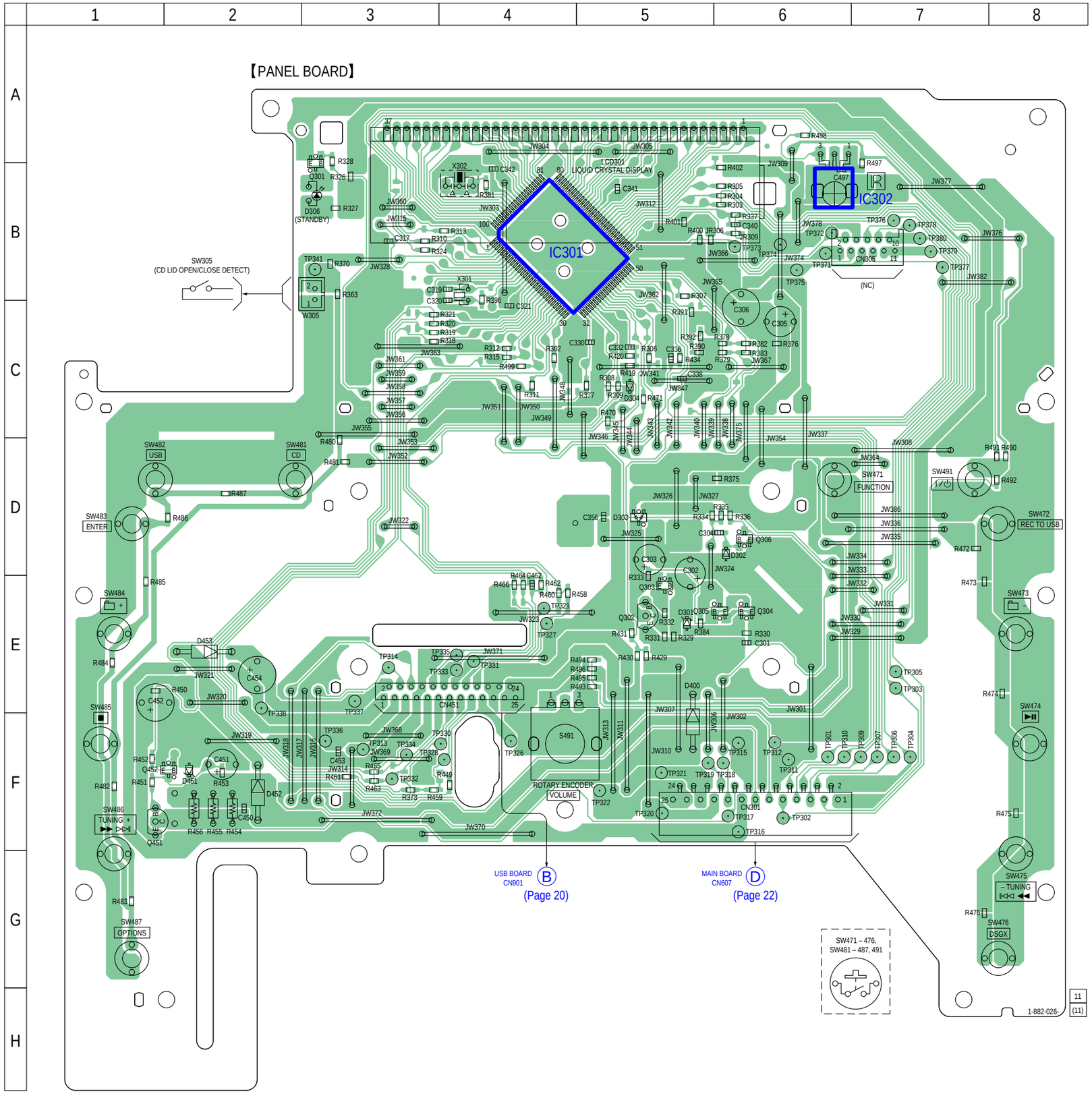

5-10. SCHEMATIC DIAGRAM - PANEL Board - • See page 24 for Waveforms. • See page 16 for IC Pin Function Descriptions.

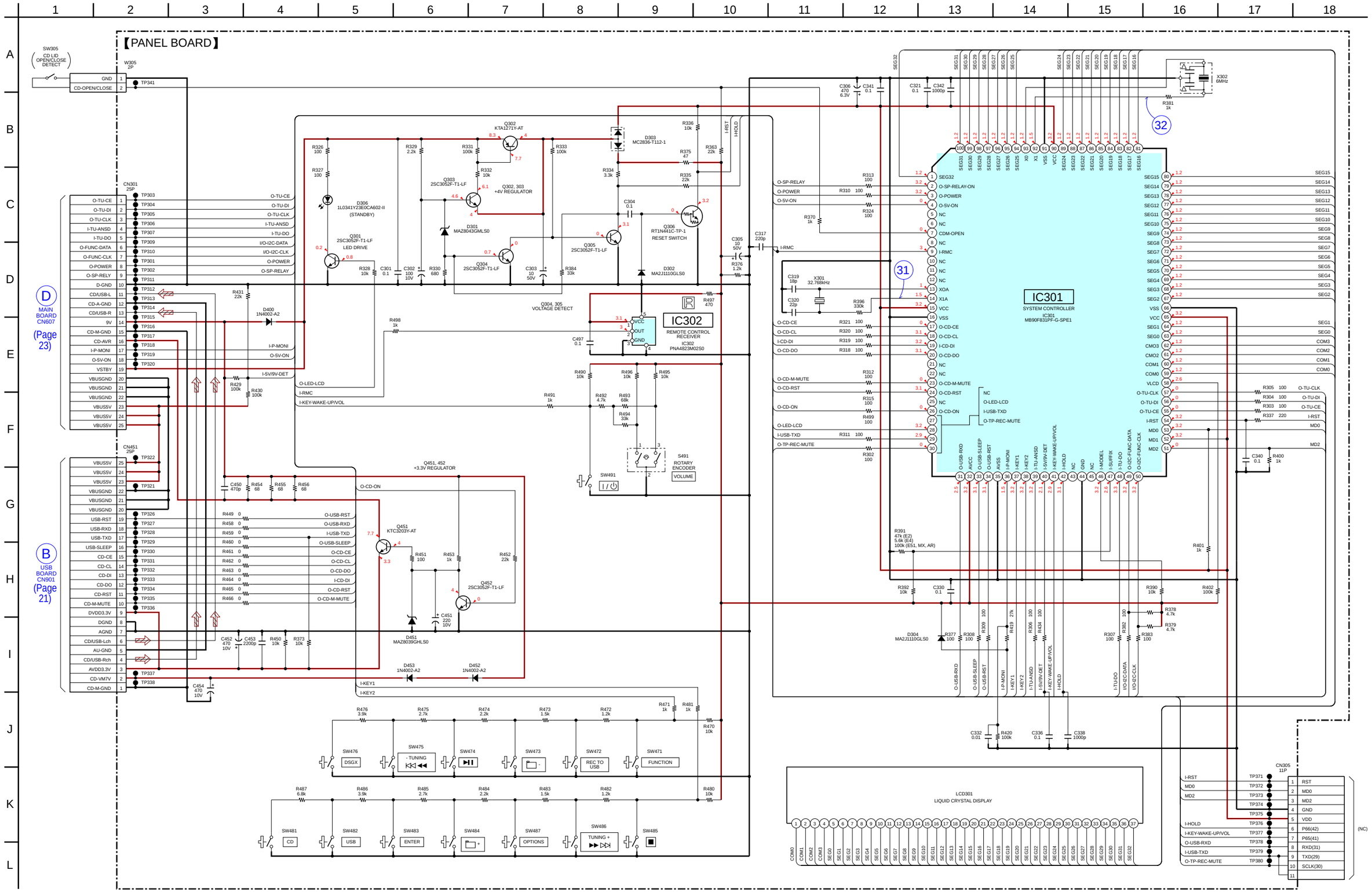

5-11. PRINTED WIRING BOARD - PT-SWITCH Board -

• See page 15 for Circuit Boards Location. • : Uses unleaded solder.

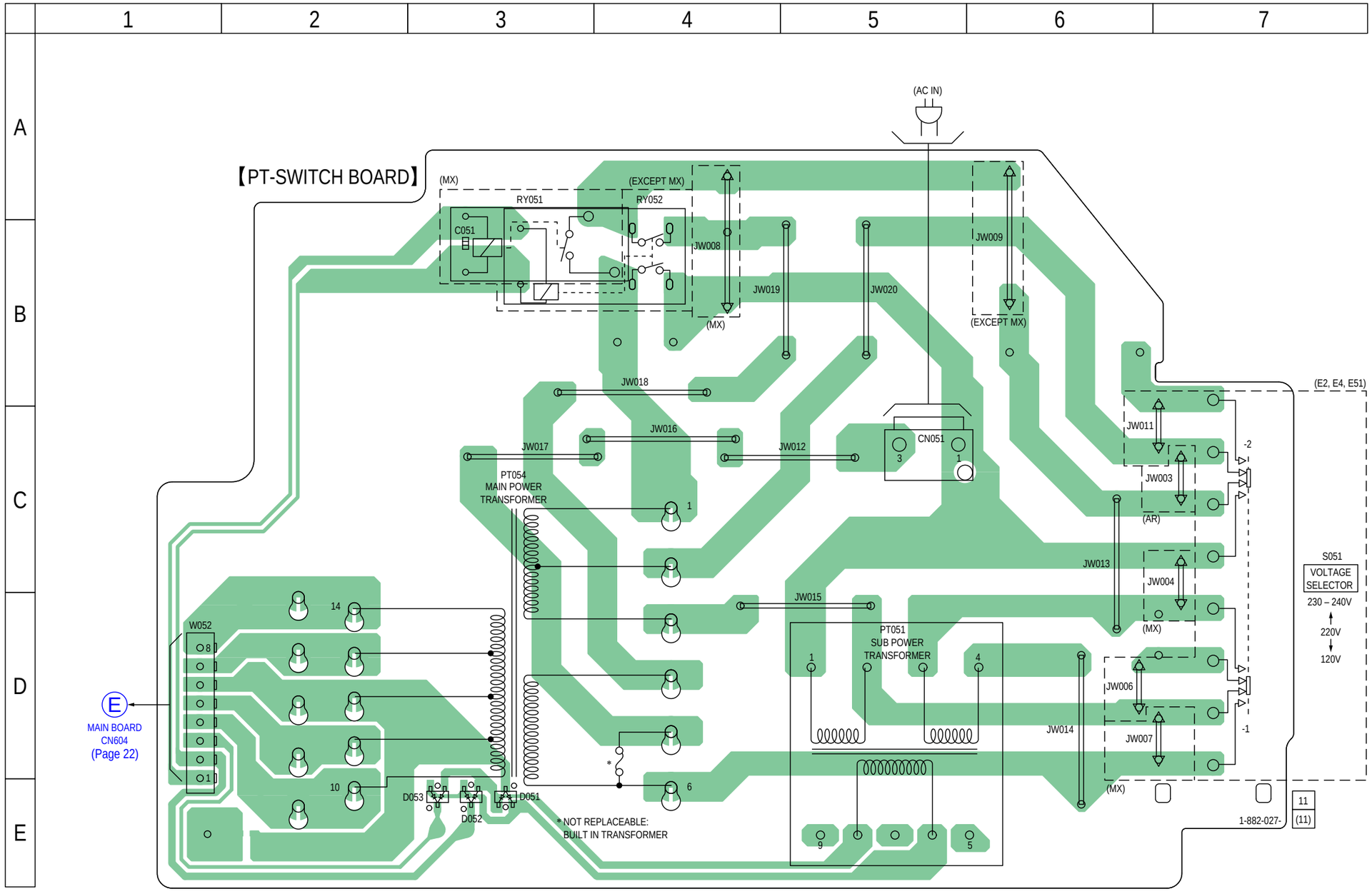

5-12. SCHEMATIC DIAGRAM - PT-SWITCH Board -

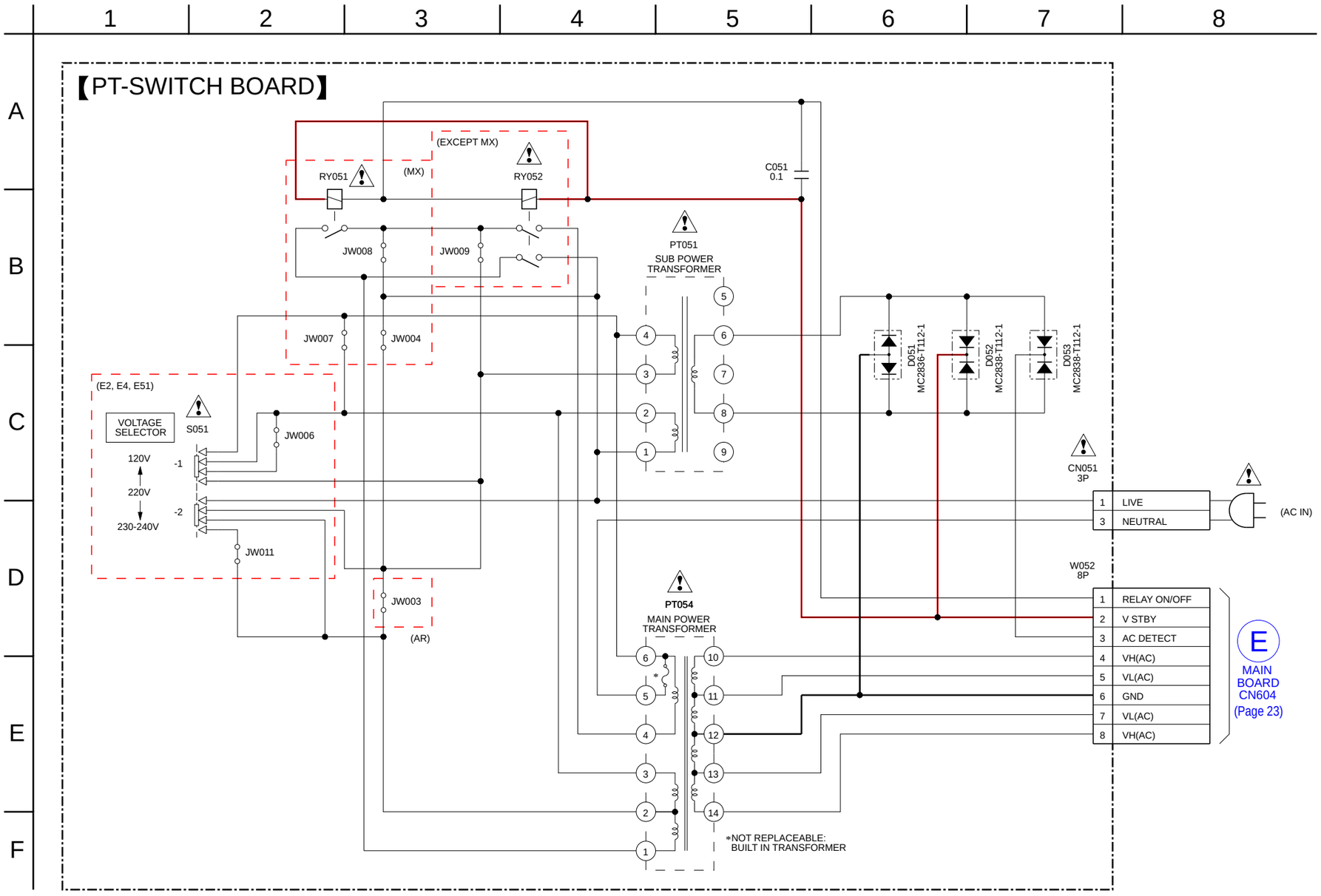

- **IC Block Diagrams**

– BD74UR Board –

IC101 LC786950T-US-H

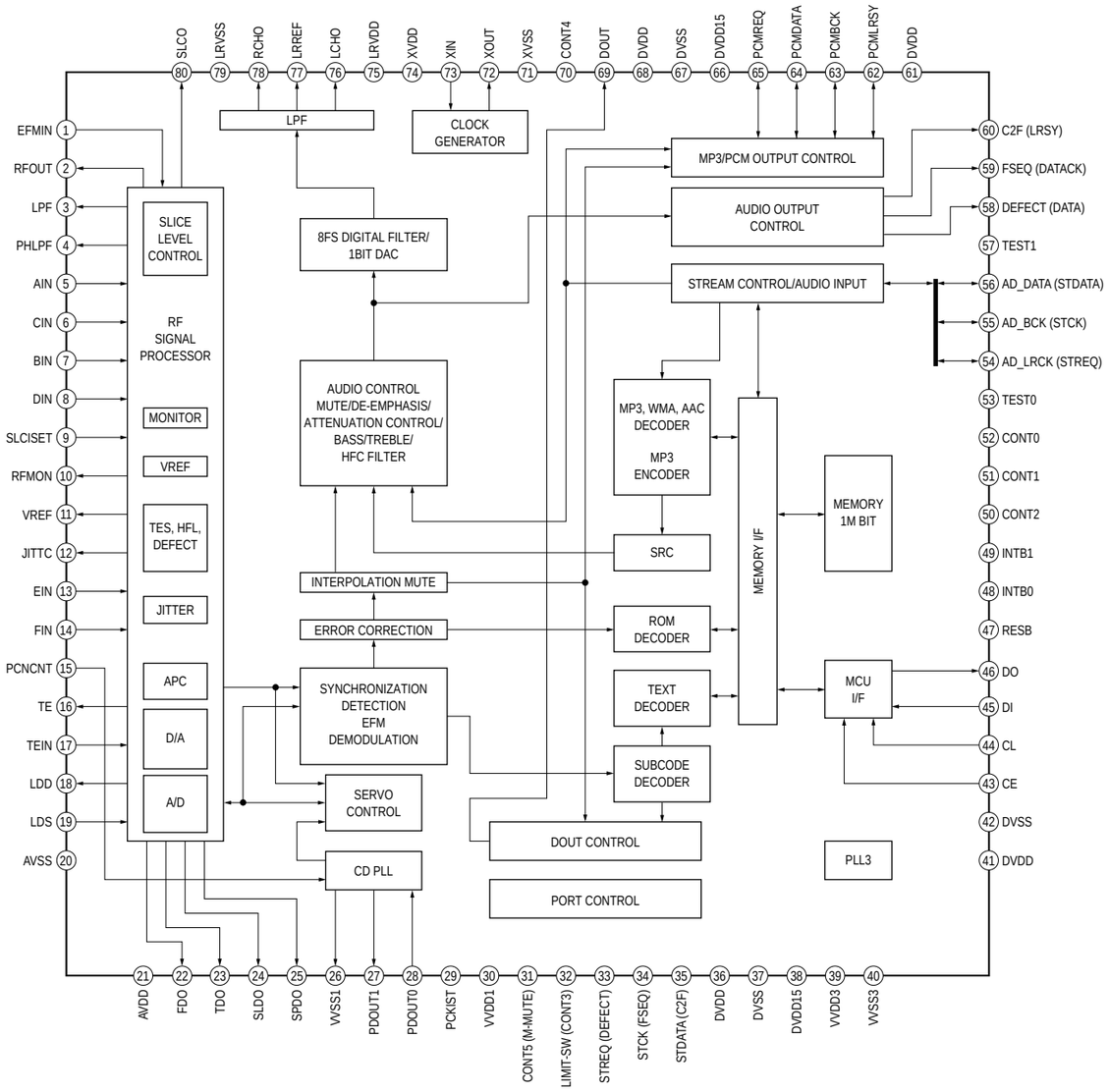

IC301 BA5826HFP-E2

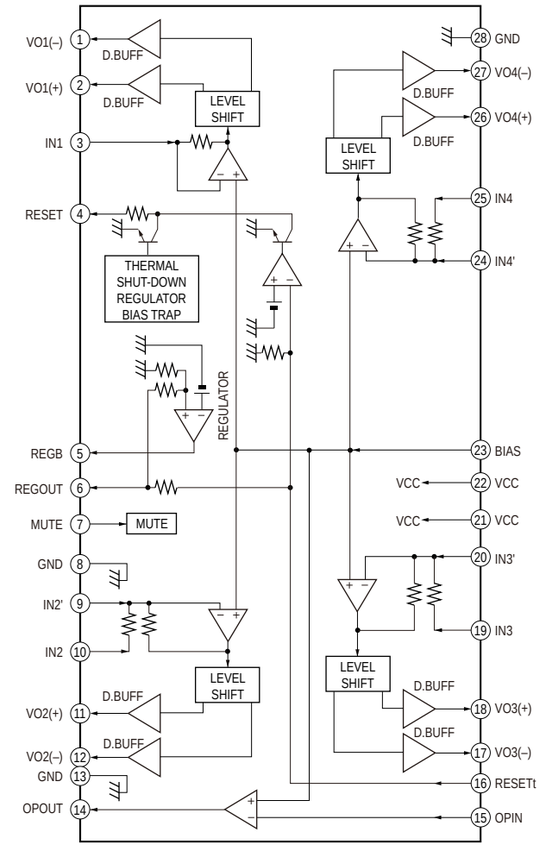

– MAIN Board –

IC601 BD3491FS-SE2

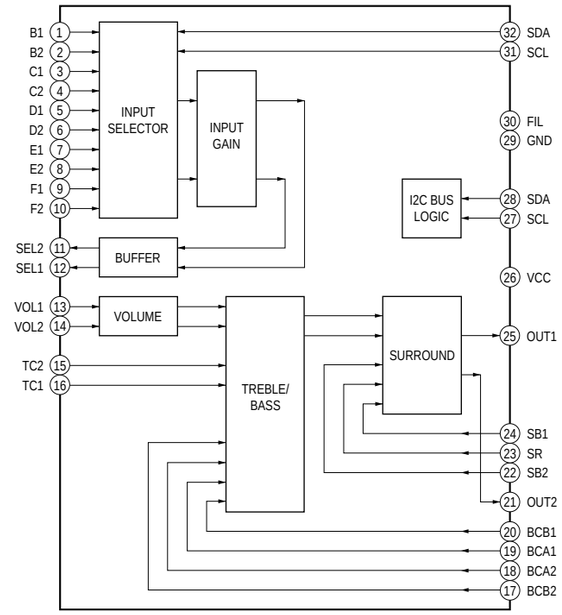

IC701 NJM2368V (TE2)

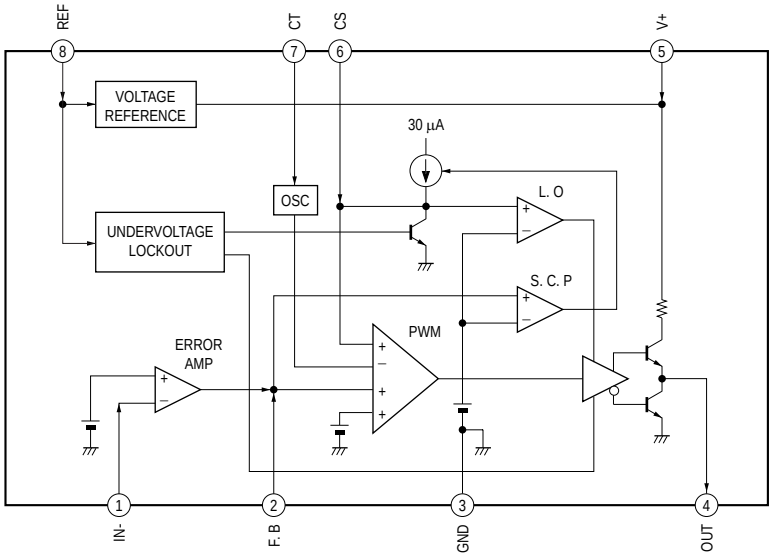

IC801 LV23401V-TLM-H

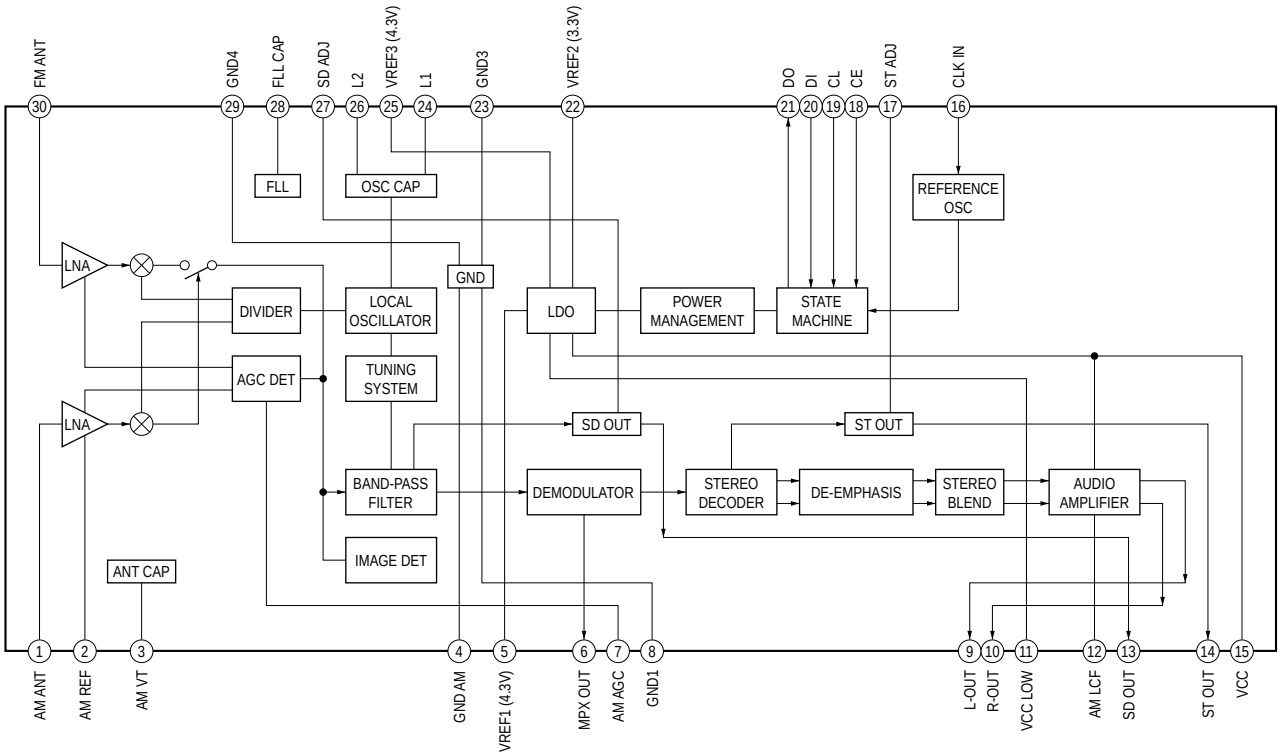

SECTION 6
EXPLODED VIEWS

Note:
- -XX and -X mean standardized parts, so they may have some difference from the original one.
- Items marked "*" are not stocked since they are seldom required for routine service. Some delay should be anticipated when ordering these items.
- The mechanical parts with no reference number in the exploded views are not supplied.
- Color Indication of Appearance Parts Example:
  KNOB, BALANCE (WHITE) . . . (RED)
  ↑ Parts Color ↑ Cabinet's Color
- Abbreviation
  AR : Argentina model
  E2 : 120V AC area in E model
  E4 : African model
  E51 : Chilean and Peruvian models
  MX : Mexican model

The components identified by mark ⚠ or dotted line with mark ⚠ are critical for safety.
Replace only with part number specified.

6-1. OVERALL SECTION

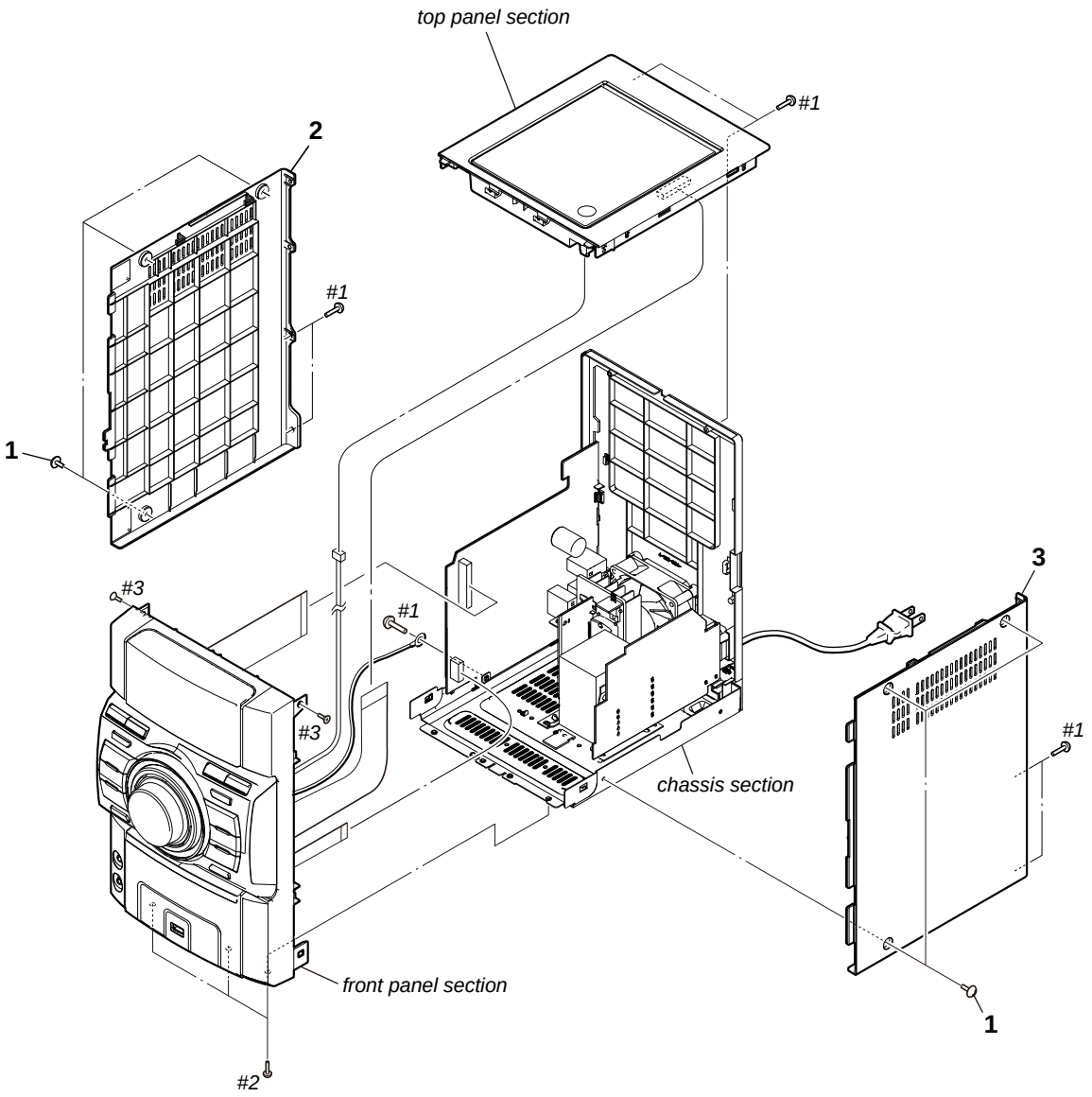

Ref. No.	Part No.	Description	Remark
1	3-363-099-32	SCREW (CASE 3 TP2)	
2	4-120-682-12	PANEL (L), SIDE	
3	4-120-683-12	PANEL (R), SIDE	
#1	7-685-647-79	SCREW +BVTP 3X10 TYPE2 IT-3	
#2	7-685-872-01	SCREW +BVTT 3X8 (S)	
#3	7-685-247-14	SCREW +KTP 3X10 TYPE2 NON-SLIT	

6-2. FRONT PANEL SECTION

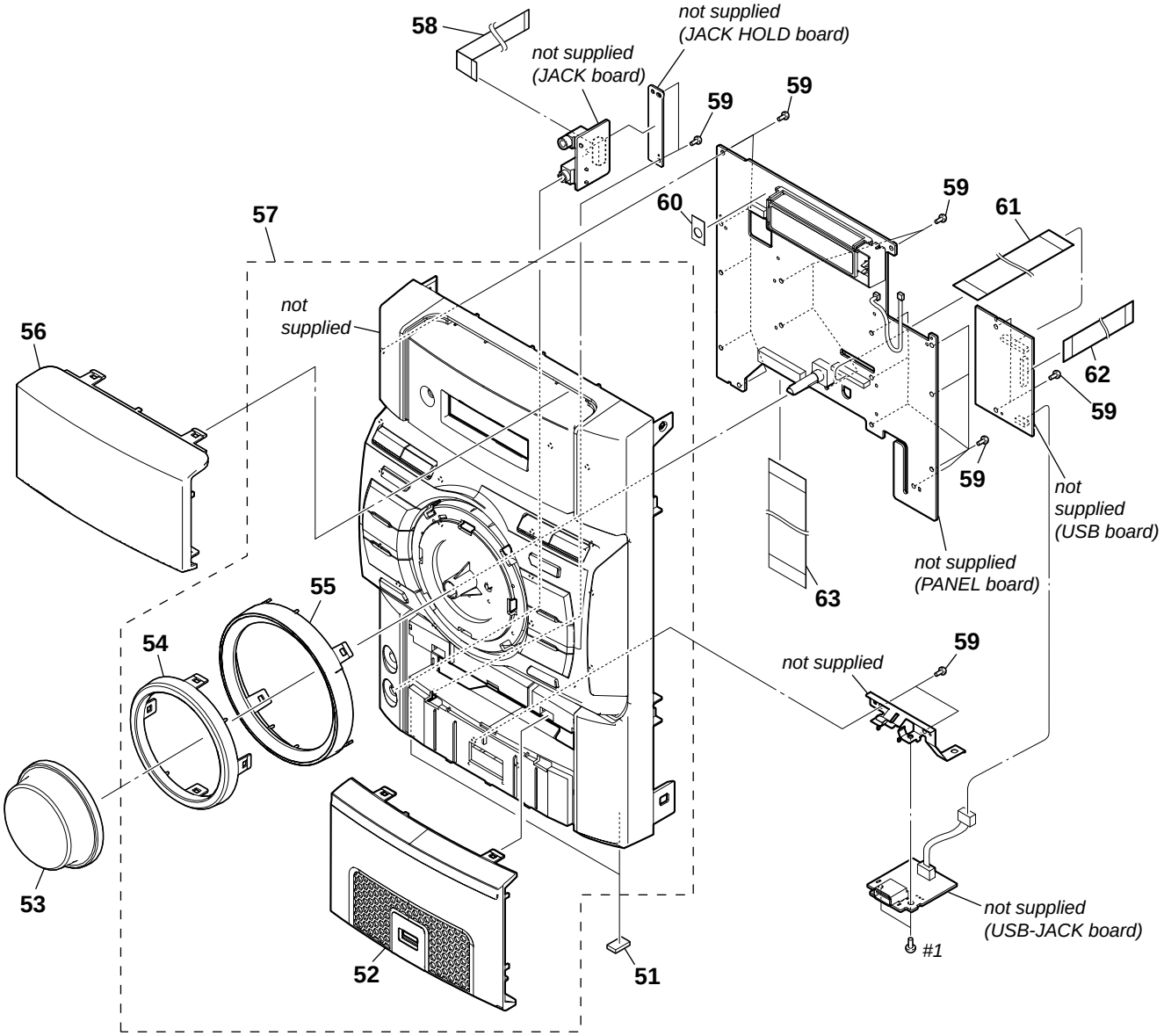

Ref. No.	Part No.	Description	Remark
51	4-225-252-01	CUSHION (FOOT)	
52	4-183-509-01	PLATE, ORNAMENTAL	
53	4-120-663-01	KNOB (VOL)	
54	4-120-658-21	RING (VOL)	
55	4-120-657-11	RING, ORNAMENT	
56	4-124-519-61	WINDOW	
57	A-1772-394-A	FRONT PANEL ASSY	

Ref. No.	Part No.	Description	Remark
58	1-832-814-21	CABLE, FLEXIBLE FLAT (9 CORE)	
59	3-087-053-01	+BVTP2.6 (3CR)	
60	4-159-924-01	SHEET (RM)	
61	1-832-635-21	CABLE, FLEXIBLE FLAT (25 CORE)	
62	1-838-369-21	CABLE, FLEXIBLE FLAT (25 CORE)	
63	1-838-370-21	CABLE, FLEXIBLE FLAT (25 CORE)	
#1	7-685-647-79	SCREW +BVTP 3X10 TYPE2 IT-3	

6-3. CHASSIS SECTION

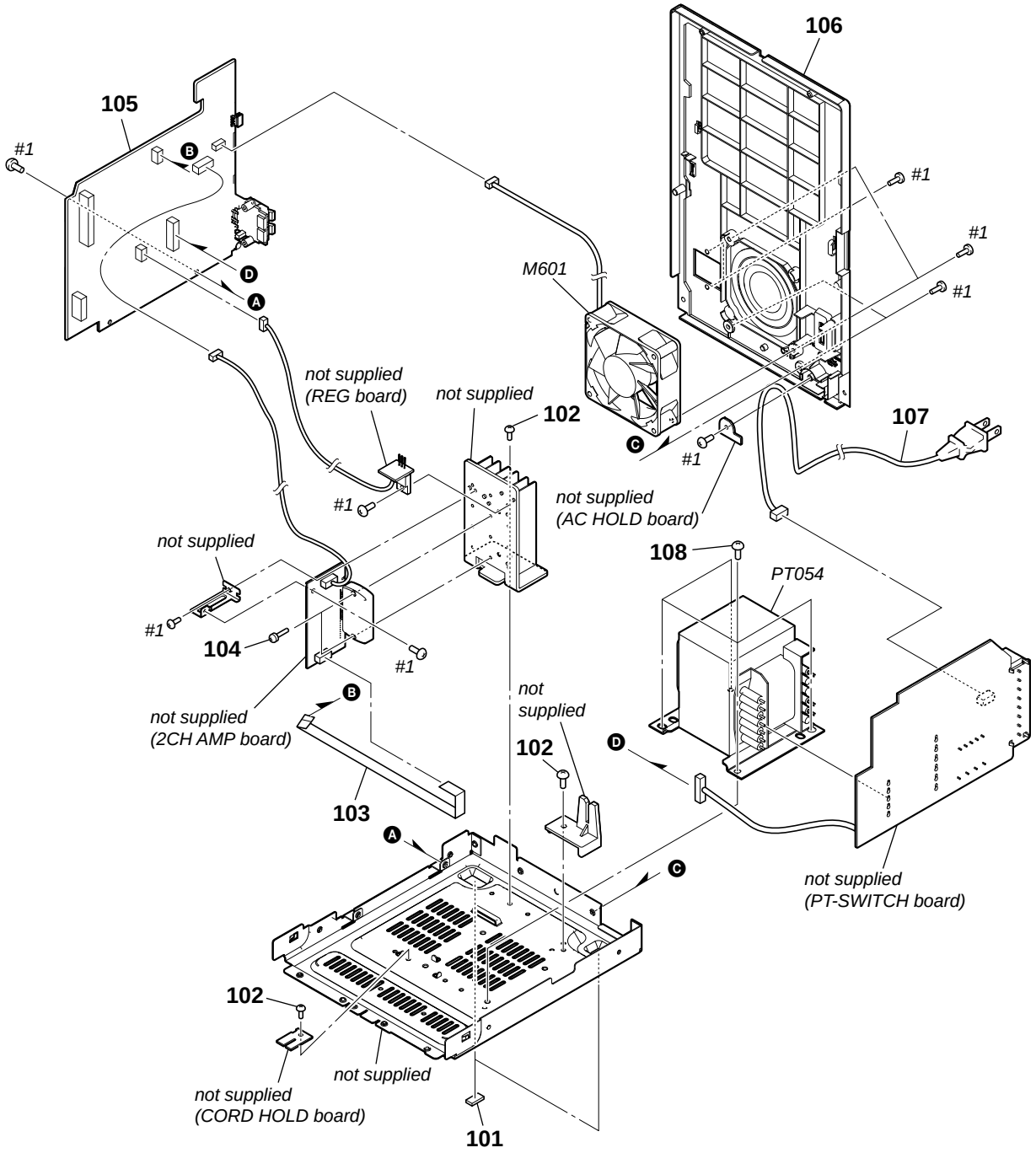

Ref. No.	Part No.	Description	Remark
101	4-225-252-01	CUSHION (FOOT)	
102	3-077-331-01	+BV3 (3-CR)	
103	1-832-796-21	CABLE, FLEXIBLE FLAT (5 CORE)	
104	3-905-609-31	SCREW (TRANSISTOR)	
105	A-1772-508-A	MAIN BOARD, COMPLETE (E2, E51, AR)	
105	A-1772-509-A	MAIN BOARD, COMPLETE (MX)	
105	A-1787-869-A	MAIN BOARD, COMPLETE (E4)	
106	4-183-684-01	PANEL, BACK (E2, E51)	
106	4-183-684-11	PANEL, BACK (MX, AR)	
106	4-183-684-21	PANEL, BACK (E4)	

Ref. No.	Part No.	Description	Remark
⚠ 107	1-834-966-41	POWER-SUPPLY CORD (E2, E4, E51)	
⚠ 107	1-837-312-11	CORD, POWER-SUPPLY (AR)	
⚠ 107	1-837-344-11	CORD, POWER-SUPPLY (MX)	
108	4-900-386-01	SCREW +BV SUMITITE S 4X8 ROUND	
⚠ M601	1-787-344-11	FAN, DC	
⚠ PT054	1-445-881-11	TRANSFORMER, POWER (MX)	
⚠ PT054	1-445-882-11	TRANSFORMER, POWER (E2, E4, E51, AR)	
#1	7-685-647-79	SCREW +BVTP 3X10 TYPE2 IT-3	

6-4. TOP PANEL SECTION

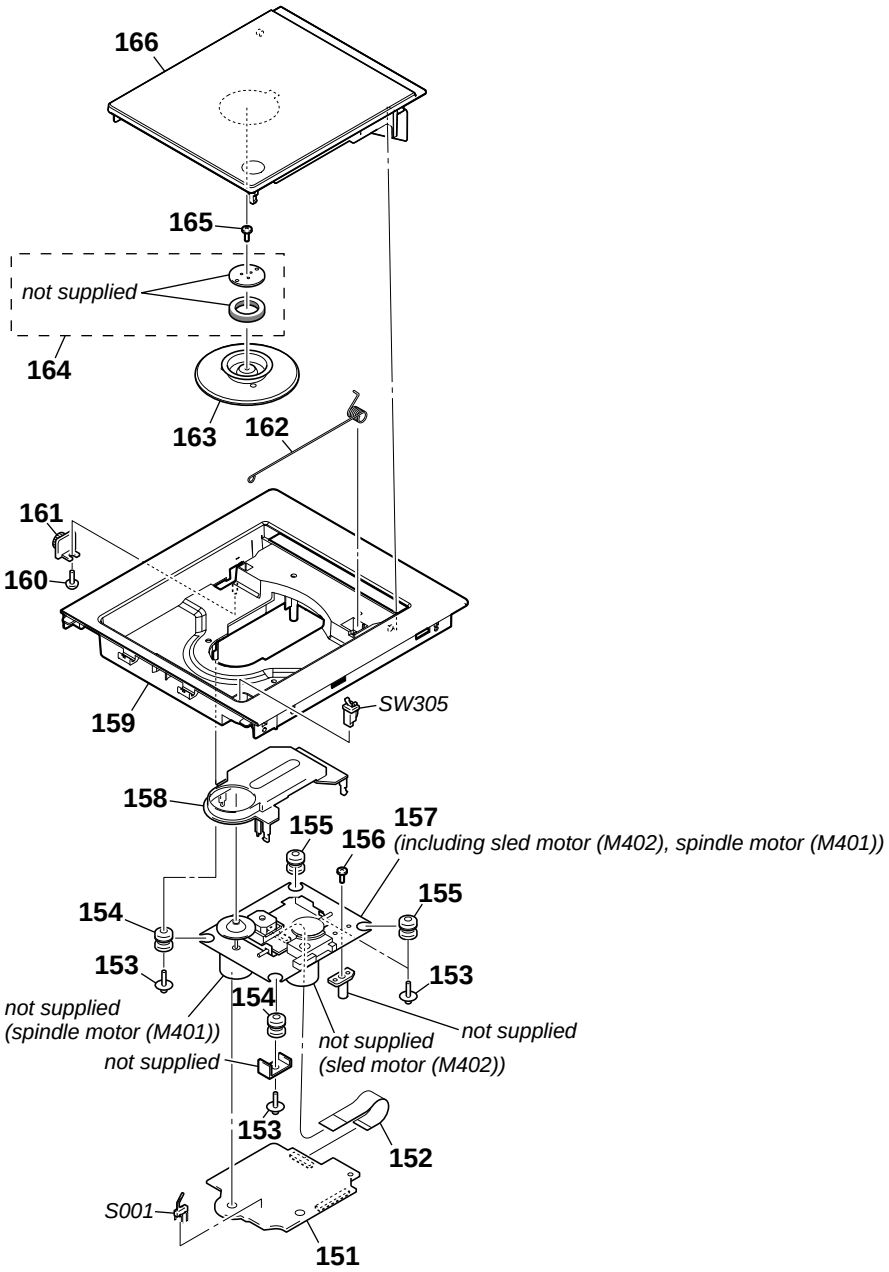

Ref. No.	Part No.	Description	Remark
151	A-1748-699-A	BD74UR BOARD, COMPLETE	
152	1-834-268-21	WIRE (FLAT TYPE) (16 CORE)	
153	4-985-672-01	SCREW (+PTPWHM2.6), FLOATING	
154	4-189-053-01	INSULATOR (BLUE)	
155	4-189-053-11	INSULATOR (GRAY)	
156	3-080-204-31	SCREW, TAPPING, P2	
⚠ 157	A-1780-028-A	OPTICAL PICK-UP BLOCK (DA11MMVGP) (Including sled motor (M402), spindle motor (M401))	
158	4-166-010-01	COVER (D1)	
159	4-120-739-12	PANEL, TOP	
160	3-087-053-01	+BVTP2.6 (3CR)	

Ref. No.	Part No.	Description	Remark
161	3-047-468-11	DAMPER	
162	4-145-341-01	SPRING (LID)	
163	4-161-552-01	PULLEY, CHUCKING (D1)	
164	1-452-899-31	MAGNET	
165	3-253-143-01	SCREW (B2.6), (+) P TAPPING	
166	4-120-740-02	LID (CD)	
S001	1-771-853-11	SWITCH, DETECTION (LIMIT)	
SW305	1-692-960-11	SWITCH, PUSH (1 KEY) (CD LID OPEN/CLOSE DETECT)	

2CH AMP | BD74UR

SECTION 7
ELECTRICAL PARTS LIST

Note:
- Due to standardization, replacements in the parts list may be different from the parts specified in the diagrams or the components used on the set.
- -XX and -X mean standardized parts, so they may have some difference from the original one.
- Items marked "*" are not stocked since they are seldom required for routine service. Some delay should be anticipated when ordering these items.
- RESISTORS
  All resistors are in ohms.
  METAL: Metal-film resistor.
  METAL OXIDE: Metal oxide-film resistor.
  F: nonflammable
- CAPACITORS
  uF: µF
- COILS
  uH: µH
- SEMICONDUCTORS
  In each case, u: µ, for example:
  uA. . : µA. . , uPA. . , µPA. . ,
  uPB. . : µPB. . , uPC. . , µPC. . ,
  uPD. . : µPD. .
- Abbreviation
  AR : Argentina model
  E2 : 120V AC area in E model
  E4 : African model
  E51 : Chilean and Peruvian models
  MX : Mexican model

When indicating parts by reference number, please include the board name.

The components identified by mark ⚠ or dotted line with mark ⚠ are critical for safety.
Replace only with part number specified.

Ref. No.	Part No.	Description				Remark
		2CH AMP BOARD				
		**********				
		< CAPACITOR >				
C101	1-126-960-11	ELECT	1uF	20%	50V	
C102	1-126-960-11	ELECT	1uF	20%	50V	
C103	1-164-315-11	CERAMIC CHIP	470PF	5%	50V	
C104	1-164-315-11	CERAMIC CHIP	470PF	5%	50V	
C105	1-162-927-11	CERAMIC CHIP	100PF	5%	50V	
C106	1-162-927-11	CERAMIC CHIP	100PF	5%	50V	
C107	1-162-908-11	CERAMIC CHIP	3PF	0.25PF	50V	
C108	1-162-908-11	CERAMIC CHIP	3PF	0.25PF	50V	
C109	1-126-947-11	ELECT	47uF	20%	35V	
C110	1-126-947-11	ELECT	47uF	20%	35V	
C111	1-162-968-11	CERAMIC CHIP	0.0047uF	10%	50V	
C112	1-164-156-11	CERAMIC CHIP	0.1uF		25V	
C141	1-164-156-11	CERAMIC CHIP	0.1uF		25V	
C142	1-164-156-11	CERAMIC CHIP	0.1uF		25V	
C160	1-165-621-11	CERAMIC CHIP	0.1uF		50V	
C161	1-165-621-11	CERAMIC CHIP	0.1uF		50V	
C162	1-126-968-11	ELECT	100uF	20%	50V	
C163	1-126-968-11	ELECT	100uF	20%	50V	
C164	1-165-621-11	CERAMIC CHIP	0.1uF		50V	
C165	1-165-621-11	CERAMIC CHIP	0.1uF		50V	
		< CONNECTOR >				
CN100	1-784-766-11	CONNECTOR, FFC 5P				
		< DIODE >				
D140	6-501-817-01	DIODE MA2J1110GLS0				
D141	6-500-335-01	DIODE MC2838-T112-1				
		< IC >				
IC102	6-705-625-01	IC STK433-040				
		< TRANSISTOR >				
Q141	6-551-270-01	TRANSISTOR	2SA2026			
Q142	6-551-270-01	TRANSISTOR	2SA2026			
		< RESISTOR >				
R103	1-216-825-11	METAL CHIP	2.2K	5%	1/10W	
R104	1-216-825-11	METAL CHIP	2.2K	5%	1/10W	
R105	1-216-825-11	METAL CHIP	2.2K	5%	1/10W	
R106	1-216-825-11	METAL CHIP	2.2K	5%	1/10W	
R107	1-216-841-11	METAL CHIP	47K	5%	1/10W	
R108	1-216-841-11	METAL CHIP	47K	5%	1/10W	
R109	1-216-817-11	METAL CHIP	470	5%	1/10W	
R110	1-216-817-11	METAL CHIP	470	5%	1/10W	
⚠ R111	1-216-361-31	METAL OXIDE	0.22	5%	2W	F
⚠ R112	1-216-361-31	METAL OXIDE	0.22	5%	2W	F
R113	1-216-841-11	METAL CHIP	47K	5%	1/10W	
R114	1-216-841-11	METAL CHIP	47K	5%	1/10W	
R115	1-216-823-11	METAL CHIP	1.5K	5%	1/10W	
R116	1-216-823-11	METAL CHIP	1.5K	5%	1/10W	
R119	1-216-809-11	METAL CHIP	100	5%	1/10W	
R120	1-216-821-11	METAL CHIP	1K	5%	1/10W	
R141	1-216-822-11	METAL CHIP	1.2K	5%	1/10W	
R142	1-216-822-11	METAL CHIP	1.2K	5%	1/10W	
R143	1-216-837-11	METAL CHIP	22K	5%	1/10W	
R144	1-216-837-11	METAL CHIP	22K	5%	1/10W	
R145	1-216-825-11	METAL CHIP	2.2K	5%	1/10W	
R146	1-216-825-11	METAL CHIP	2.2K	5%	1/10W	
R160	1-216-813-11	METAL CHIP	220	5%	1/10W	
R161	1-216-813-11	METAL CHIP	220	5%	1/10W	
R162	1-216-813-11	METAL CHIP	220	5%	1/10W	
R163	1-216-813-11	METAL CHIP	220	5%	1/10W	
**********						
	A-1748-699-A	BD74UR BOARD, COMPLETE				
		**********				
		< CAPACITOR >				
C101	1-162-968-11	CERAMIC CHIP	0.0047uF	10%	50V	
C102	1-162-970-11	CERAMIC CHIP	0.01uF	10%	25V	
C103	1-107-826-11	CERAMIC CHIP	0.1uF	10%	16V	
C104	1-107-826-11	CERAMIC CHIP	0.1uF	10%	16V	
C105	1-162-970-11	CERAMIC CHIP	0.01uF	10%	25V	
C106	1-162-967-11	CERAMIC CHIP	0.0033uF	10%	50V	
C107	1-107-826-11	CERAMIC CHIP	0.1uF	10%	16V	
C108	1-162-970-11	CERAMIC CHIP	0.01uF	10%	25V	
C110	1-127-715-11	CERAMIC CHIP	0.22uF	10%	16V	
C111	1-164-227-11	CERAMIC CHIP	0.022uF	10%	25V	
C112	1-107-826-11	CERAMIC CHIP	0.1uF	10%	16V	
C113	1-107-826-11	CERAMIC CHIP	0.1uF	10%	16V	
C116	1-128-995-21	ELECT CHIP	100uF	20%	10V	
C117	1-100-756-91	CERAMIC CHIP	0.047uF	10%	50V	
C118	1-164-156-11	CERAMIC CHIP	0.1uF		25V	
C119	1-128-995-21	ELECT CHIP	100uF	20%	10V	
C120	1-164-156-11	CERAMIC CHIP	0.1uF		25V	
C121	1-164-156-11	CERAMIC CHIP	0.1uF		25V	

Ref. No.	Part No.	Description			Remark
C122	1-164-156-11	CERAMIC CHIP	0.1uF		25V
C123	1-164-156-11	CERAMIC CHIP	0.1uF		25V
C124	1-128-995-21	ELECT CHIP	100uF	20%	10V
C125	1-164-156-11	CERAMIC CHIP	0.1uF		25V
C126	1-164-156-11	CERAMIC CHIP	0.1uF		25V
C127	1-164-156-11	CERAMIC CHIP	0.1uF		25V
C128	1-164-156-11	CERAMIC CHIP	0.1uF		25V
C129	1-128-995-21	ELECT CHIP	100uF	20%	10V
C130	1-164-156-11	CERAMIC CHIP	0.1uF		25V
C131	1-164-156-11	CERAMIC CHIP	0.1uF		25V
C132	1-164-156-11	CERAMIC CHIP	0.1uF		25V
C133	1-107-826-11	CERAMIC CHIP	0.1uF	10%	16V
C201	1-164-156-11	CERAMIC CHIP	0.1uF		25V
C203	1-137-710-91	CERAMIC CHIP	10uF	20%	6.3V
C205	1-137-710-91	CERAMIC CHIP	10uF	20%	6.3V
C206	1-165-908-11	CERAMIC CHIP	1uF	10%	10V
C207	1-128-995-21	ELECT CHIP	100uF	20%	10V
C208	1-162-964-11	CERAMIC CHIP	0.001uF	10%	50V
C209	1-164-156-11	CERAMIC CHIP	0.1uF		25V
C301	1-128-394-11	ELECT CHIP	220uF	20%	10V
C302	1-164-156-11	CERAMIC CHIP	0.1uF		25V
C303	1-164-156-11	CERAMIC CHIP	0.1uF		25V
C304	1-164-156-11	CERAMIC CHIP	0.1uF		25V
C401	1-128-995-21	ELECT CHIP	100uF	20%	10V
C402	1-128-995-21	ELECT CHIP	100uF	20%	10V
C403	1-164-156-11	CERAMIC CHIP	0.1uF		25V
C404	1-164-156-11	CERAMIC CHIP	0.1uF		25V
C406	1-162-927-11	CERAMIC CHIP	100PF	5%	50V
C407	1-162-927-11	CERAMIC CHIP	100PF	5%	50V
C413	1-162-966-11	CERAMIC CHIP	0.0022uF	10%	50V
C414	1-162-966-11	CERAMIC CHIP	0.0022uF	10%	50V
C418	1-162-927-11	CERAMIC CHIP	100PF	5%	50V
		< CONNECTOR >			
CN201	1-770-425-51	CONNECTOR, FFC/FPC 16P			
CN403	1-784-875-51	CONNECTOR, FFC (LIF (NON-ZIF)) 25P			
		< IC >			
IC101	6-713-623-01	IC LC786950T-US-H			
IC301	6-710-637-01	IC BA5826HFP-E2			
		< TRANSISTOR >			
Q201	6-551-120-01	TRANSISTOR	2SA2119K		
		< RESISTOR >			
R101	1-216-815-11	METAL CHIP	330	5%	1/10W
R102	1-216-833-11	METAL CHIP	10K	5%	1/10W
R103	1-216-864-11	SHORT CHIP	0		
R104	1-216-864-11	SHORT CHIP	0		
R105	1-216-864-11	SHORT CHIP	0		
R106	1-216-864-11	SHORT CHIP	0		
R107	1-216-843-11	METAL CHIP	68K	5%	1/10W
R108	1-216-821-11	METAL CHIP	1K	5%	1/10W
R109	1-216-821-11	METAL CHIP	1K	5%	1/10W
R111	1-216-837-11	METAL CHIP	22K	5%	1/10W
R112	1-216-864-11	SHORT CHIP	0		
R113	1-216-819-11	METAL CHIP	680	5%	1/10W
R114	1-216-819-11	METAL CHIP	680	5%	1/10W
R116	1-216-843-11	METAL CHIP	68K	5%	1/10W
R117	1-216-833-11	METAL CHIP	10K	5%	1/10W

Ref. No.	Part No.	Description			Remark
R118	1-216-809-11	METAL CHIP	100	5%	1/10W
R120	1-216-833-11	METAL CHIP	10K	5%	1/10W
R121	1-216-833-11	METAL CHIP	10K	5%	1/10W
R122	1-216-833-11	METAL CHIP	10K	5%	1/10W
R123	1-216-833-11	METAL CHIP	10K	5%	1/10W
R124	1-216-833-11	METAL CHIP	10K	5%	1/10W
R126	1-216-864-11	SHORT CHIP	0		
R129	1-216-809-11	METAL CHIP	100	5%	1/10W
R131	1-216-295-00	SHORT CHIP	0		
R201	1-218-446-11	METAL CHIP	1	5%	1/10W
R202	1-216-789-11	METAL CHIP	2.2	5%	1/10W
R203	1-216-864-11	SHORT CHIP	0		
R301	1-216-830-11	METAL CHIP	5.6K	5%	1/10W
R302	1-216-839-11	METAL CHIP	33K	5%	1/10W
R303	1-216-834-11	METAL CHIP	12K	5%	1/10W
R304	1-216-833-11	METAL CHIP	10K	5%	1/10W
R305	1-216-832-11	METAL CHIP	8.2K	5%	1/10W
R401	1-216-295-00	SHORT CHIP	0		
R402	1-216-295-00	SHORT CHIP	0		
R403	1-216-809-11	METAL CHIP	100	5%	1/10W
R404	1-216-809-11	METAL CHIP	100	5%	1/10W
R405	1-216-809-11	METAL CHIP	100	5%	1/10W
R406	1-216-809-11	METAL CHIP	100	5%	1/10W
R407	1-216-809-11	METAL CHIP	100	5%	1/10W
R408	1-216-809-11	METAL CHIP	100	5%	1/10W
R409	1-216-809-11	METAL CHIP	100	5%	1/10W
R411	1-216-809-11	METAL CHIP	100	5%	1/10W
R412	1-216-809-11	METAL CHIP	100	5%	1/10W
R413	1-216-809-11	METAL CHIP	100	5%	1/10W
R414	1-216-809-11	METAL CHIP	100	5%	1/10W
R415	1-216-809-11	METAL CHIP	100	5%	1/10W
R416	1-216-809-11	METAL CHIP	100	5%	1/10W
R417	1-216-295-00	SHORT CHIP	0		
		< VIBRATOR >			
X101	1-795-101-21	VIBRATOR, CERAMIC (16.934MHz)			

****

JACK BOARD

****

		< CAPACITOR >			
C491	1-164-156-11	CERAMIC CHIP	0.1uF		25V
C495	1-162-964-11	CERAMIC CHIP	0.001uF	10%	50V
C496	1-162-964-11	CERAMIC CHIP	0.001uF	10%	50V
		< CONNECTOR >			
CN496	1-784-770-11	CONNECTOR, FFC 9P			
		< JACK >			
J491	1-566-822-51	JACK (PC IN)			
J492	1-815-629-11	JACK (PHONES)			
		< RESISTOR >			
R477	1-216-837-11	METAL CHIP	22K	5%	1/10W
R478	1-216-837-11	METAL CHIP	22K	5%	1/10W

****

MAIN

Ref. No.	Part No.	Description			Remark
	A-1772-508-A	MAIN BOARD, COMPLETE (E2, E51, AR)			
	A-1772-509-A	MAIN BOARD, COMPLETE (MX)			
	A-1787-869-A	MAIN BOARD, COMPLETE (E4)			
		**********			
		< CAPACITOR >			
C607	1-164-156-11	CERAMIC CHIP	0.1uF		25V
C608	1-164-156-11	CERAMIC CHIP	0.1uF		25V
C609	1-162-968-11	CERAMIC CHIP	0.0047uF	10%	50V
C610	1-162-968-11	CERAMIC CHIP	0.0047uF	10%	50V
C611	1-127-715-11	CERAMIC CHIP	0.22uF	10%	16V
C612	1-127-715-11	CERAMIC CHIP	0.22uF	10%	16V
C617	1-164-156-11	CERAMIC CHIP	0.1uF		25V
C618	1-164-156-11	CERAMIC CHIP	0.1uF		25V
C619	1-162-970-11	CERAMIC CHIP	0.01uF	10%	25V
C620	1-104-658-91	ELECT	100uF	20%	10V
C621	1-136-165-00	FILM	0.1uF	5%	50V
C622	1-126-974-11	ELECT	3300uF	20%	50V
C623	1-136-165-00	FILM	0.1uF	5%	50V
C626	1-126-974-11	ELECT	3300uF	20%	50V
C627	1-126-943-11	ELECT	2200uF	20%	25V
C628	1-126-942-61	ELECT	1000uF	20%	25V
C629	1-162-968-11	CERAMIC CHIP	0.0047uF	10%	50V
C630	1-126-947-11	ELECT	47uF	20%	35V
C631	1-126-933-11	ELECT	100uF	20%	16V
C632	1-126-963-11	ELECT	4.7uF	20%	50V
C633	1-165-176-11	CERAMIC CHIP	0.047uF	10%	16V
C634	1-165-176-11	CERAMIC CHIP	0.047uF	10%	16V
C637	1-165-176-11	CERAMIC CHIP	0.047uF	10%	16V
C638	1-165-176-11	CERAMIC CHIP	0.047uF	10%	16V
C639	1-162-965-11	CERAMIC CHIP	0.0015uF	10%	50V (EXCEPT E4)
C639	1-162-979-11	CERAMIC CHIP	0.0027uF	10%	50V (E4)
C640	1-162-965-11	CERAMIC CHIP	0.0015uF	10%	50V (EXCEPT E4)
C640	1-162-979-11	CERAMIC CHIP	0.0027uF	10%	50V (E4)
C641	1-126-962-11	ELECT	3.3uF	20%	50V
C642	1-164-227-11	CERAMIC CHIP	0.022uF	10%	25V
C645	1-162-964-11	CERAMIC CHIP	0.001uF	10%	50V
C647	1-162-964-11	CERAMIC CHIP	0.001uF	10%	50V
C648	1-125-837-11	CERAMIC CHIP	1uF	10%	6.3V
C649	1-162-960-11	CERAMIC CHIP	220PF	10%	50V
C650	1-125-837-11	CERAMIC CHIP	1uF	10%	6.3V
C655	1-162-960-11	CERAMIC CHIP	220PF	10%	50V
C656	1-125-837-11	CERAMIC CHIP	1uF	10%	6.3V
C657	1-162-964-11	CERAMIC CHIP	0.001uF	10%	50V
C658	1-125-837-11	CERAMIC CHIP	1uF	10%	6.3V
C661	1-126-964-11	ELECT	10uF	20%	50V
C662	1-162-967-11	CERAMIC CHIP	0.0033uF	10%	50V
C663	1-126-960-11	ELECT	1uF	20%	50V
C664	1-126-960-11	ELECT	1uF	20%	50V
C666	1-162-964-11	CERAMIC CHIP	0.001uF	10%	50V
C667	1-126-934-11	ELECT	220uF	20%	16V
C674	1-164-227-11	CERAMIC CHIP	0.022uF	10%	25V
C684	1-110-563-11	CERAMIC CHIP	0.068uF	10%	16V
C685	1-110-563-11	CERAMIC CHIP	0.068uF	10%	16V
C686	1-110-563-11	CERAMIC CHIP	0.068uF	10%	16V
C687	1-110-563-11	CERAMIC CHIP	0.068uF	10%	16V
C694	1-162-964-11	CERAMIC CHIP	0.001uF	10%	50V
C695	1-125-837-11	CERAMIC CHIP	1uF	10%	6.3V
C696	1-125-837-11	CERAMIC CHIP	1uF	10%	6.3V
C699	1-162-964-11	CERAMIC CHIP	0.001uF	10%	50V
C700	1-162-964-11	CERAMIC CHIP	0.001uF	10%	50V
C713	1-162-962-11	CERAMIC CHIP	470PF	10%	50V
C715	1-164-156-11	CERAMIC CHIP	0.1uF		25V
C731	1-126-963-11	ELECT	4.7uF	20%	50V
C732	1-126-964-11	ELECT	10uF	20%	50V
C760	1-126-941-11	ELECT	470uF	20%	25V
C761	1-126-935-11	ELECT	470uF	20%	16V
C762	1-126-916-11	ELECT	1000uF	20%	6.3V
C763	1-164-315-11	CERAMIC CHIP	470PF	5%	50V
C764	1-126-964-11	ELECT	10uF	20%	50V
C765	1-162-964-11	CERAMIC CHIP	0.001uF	10%	50V
C766	1-162-968-11	CERAMIC CHIP	0.0047uF	10%	50V
C771	1-126-960-11	ELECT	1uF	20%	50V
C773	1-126-933-11	ELECT	100uF	20%	16V
C776	1-162-964-11	CERAMIC CHIP	0.001uF	10%	50V
C788	1-162-968-11	CERAMIC CHIP	0.0047uF	10%	50V
C789	1-162-968-11	CERAMIC CHIP	0.0047uF	10%	50V
C810	1-126-925-91	ELECT	470uF	20%	10V
C811	1-164-156-11	CERAMIC CHIP	0.1uF		25V
C812	1-165-176-11	CERAMIC CHIP	0.047uF	10%	16V
C813	1-126-963-11	ELECT	4.7uF	20%	50V
C814	1-126-960-11	ELECT	1uF	20%	50V
C815	1-164-156-11	CERAMIC CHIP	0.1uF		25V
C816	1-107-826-11	CERAMIC CHIP	0.1uF	10%	16V
C820	1-126-965-11	ELECT	22uF	20%	50V
C821	1-125-837-11	CERAMIC CHIP	1uF	10%	6.3V
C822	1-125-837-11	CERAMIC CHIP	1uF	10%	6.3V
C852	1-162-970-11	CERAMIC CHIP	0.01uF	10%	25V
C853	1-125-837-11	CERAMIC CHIP	1uF	10%	6.3V
C854	1-125-837-11	CERAMIC CHIP	1uF	10%	6.3V
C855	1-125-837-11	CERAMIC CHIP	1uF	10%	6.3V
C856	1-125-837-11	CERAMIC CHIP	1uF	10%	6.3V
C859	1-164-156-11	CERAMIC CHIP	0.1uF		25V
C860	1-162-970-11	CERAMIC CHIP	0.01uF	10%	25V
C861	1-162-970-11	CERAMIC CHIP	0.01uF	10%	25V
C862	1-162-970-11	CERAMIC CHIP	0.01uF	10%	25V
C863	1-164-156-11	CERAMIC CHIP	0.1uF		25V
		< CONNECTOR >			
CN601	1-819-131-11	PIN, CONNECTOR 3P			
CN603	1-784-766-11	CONNECTOR, FFC 5P			
CN604	1-819-136-11	PIN, CONNECTOR 8P			
CN605	1-784-770-11	CONNECTOR, FFC 9P			
CN607	1-784-786-11	CONNECTOR, FFC 25P			
CN609	1-815-444-11	PIN, CONNECTOR (PWB) 3P			
CN633	1-819-133-11	PIN, CONNECTOR			
* CN801	1-506-680-11	PLUG, CONNECTOR (2.5mm) 3P			(ANTENNA FM/AM)
		< DIODE >			
D601	6-500-335-01	DIODE MC2838-T112-1			
D602	6-500-335-01	DIODE MC2838-T112-1			
D604	6-501-817-01	DIODE MA2J1110GLS0			
D605	6-501-817-01	DIODE MA2J1110GLS0			
D606	6-500-334-01	DIODE MC2836-T112-1			
D607	6-502-619-01	DIODE 1N5402-C532-2			
D608	6-502-619-01	DIODE 1N5402-C532-2			
D609	6-502-619-01	DIODE 1N5402-C532-2			
D610	6-502-619-01	DIODE 1N5402-C532-2			

Ref. No.	Part No.	Description	Remark
D611	6-501-582-01	DIODE 1N4002-A2	
D612	6-501-582-01	DIODE 1N4002-A2	
D614	6-501-817-01	DIODE MA2J1110GLS0	
D617	6-500-335-01	DIODE MC2838-T112-1	
D628	6-501-817-01	DIODE MA2J1110GLS0	
D631	6-501-817-01	DIODE MA2J1110GLS0	
D701	6-502-161-01	DIODE RB055L-40TE25	
D731	6-501-722-01	DIODE MAZ8043GMLS0	
D732	6-501-760-01	DIODE MAZ8100GMLS0	
D735	6-501-817-01	DIODE MA2J1110GLS0	
D791	6-501-817-01	DIODE MA2J1110GLS0	
D801	6-500-848-01	DIODE MC2840-T112-1	
D802	6-500-848-01	DIODE MC2840-T112-1	
		< FERRITE BEAD >	
FB601	1-412-473-51	INDUCTOR (SMALL TYPE)	
		< BAND PASS FILTER >	
FL801	1-236-711-21	FILTER, BAND PASS	
		< IC >	
IC601	6-713-384-01	IC BD3491FS-SE2	
IC701	6-600-113-01	IC NJM2368V (TE2)	
IC801	6-714-822-01	IC LV23401V-TLM-H	
		< JUMPER RESISTOR >	
JR601	1-216-864-11	SHORT CHIP 0	
JR602	1-216-864-11	SHORT CHIP 0	
JR603	1-216-864-11	SHORT CHIP 0	
		< COIL >	
L603	1-456-107-11	COIL, AIR-CORE	
L604	1-456-107-11	COIL, AIR-CORE	
L701	1-456-467-31	INDUCTOR 100uH	
L801	1-481-550-21	INDUCTOR 0.039uH	
L802	1-481-550-21	INDUCTOR 0.039uH	
L803	1-457-757-11	COIL, AM ANTENNA	
		< TRANSISTOR >	
Q604	8-729-120-28	TRANSISTOR 2SC1623-L5L6	
Q605	8-729-120-28	TRANSISTOR 2SC1623-L5L6	
Q606	8-729-120-28	TRANSISTOR 2SC1623-L5L6	
Q608	8-729-120-28	TRANSISTOR 2SC1623-L5L6	
Q611	8-729-120-28	TRANSISTOR 2SC1623-L5L6	
Q612	6-551-696-01	TRANSISTOR ISA1235AC1TP-1EF	
Q618	6-551-696-01	TRANSISTOR ISA1235AC1TP-1EF	
Q619	8-729-120-28	TRANSISTOR 2SC1623-L5L6	
Q706	8-729-040-76	TRANSISTOR KTA1273-Y-AT	
Q707	8-729-040-76	TRANSISTOR KTA1273-Y-AT	
Q708	8-729-120-28	TRANSISTOR 2SC1623-L5L6	
Q709	8-729-120-28	TRANSISTOR 2SC1623-L5L6	
Q710	6-551-696-01	TRANSISTOR ISA1235AC1TP-1EF	
Q731	8-729-037-03	TRANSISTOR KTA1266GR-AT	
Q732	8-729-120-28	TRANSISTOR 2SC1623-L5L6	
Q770	8-729-120-28	TRANSISTOR 2SC1623-L5L6	
Q771	8-729-120-28	TRANSISTOR 2SC1623-L5L6	
Q772	8-729-120-28	TRANSISTOR 2SC1623-L5L6	

Ref. No.	Part No.	Description				Remark
		< RESISTOR >				
R609	1-216-829-11	METAL CHIP	4.7K	5%	1/10W	
R610	1-216-829-11	METAL CHIP	4.7K	5%	1/10W	
R611	1-216-797-11	METAL CHIP	10	5%	1/10W	
R612	1-216-797-11	METAL CHIP	10	5%	1/10W	
R613	1-216-833-11	METAL CHIP	10K	5%	1/10W	
R614	1-216-833-11	METAL CHIP	10K	5%	1/10W	
R615	1-216-797-11	METAL CHIP	10	5%	1/10W	
R616	1-216-828-11	METAL CHIP	3.9K	5%	1/10W	
R617	1-216-833-11	METAL CHIP	10K	5%	1/10W	
R618	1-216-833-11	METAL CHIP	10K	5%	1/10W	
R619	1-216-828-11	METAL CHIP	3.9K	5%	1/10W	
R620	1-216-829-11	METAL CHIP	4.7K	5%	1/10W	
R621	1-216-829-11	METAL CHIP	4.7K	5%	1/10W	
R622	1-216-839-11	METAL CHIP	33K	5%	1/10W	
R623	1-216-833-11	METAL CHIP	10K	5%	1/10W	
R624	1-216-833-11	METAL CHIP	10K	5%	1/10W	
R625	1-216-839-11	METAL CHIP	33K	5%	1/10W	
R628	1-216-833-11	METAL CHIP	10K	5%	1/10W	
R637	1-216-829-11	METAL CHIP	4.7K	5%	1/10W	
R638	1-249-401-11	CARBON	47	5%	1/4W	
R639	1-216-845-11	METAL CHIP	100K	5%	1/10W	
R640	1-216-845-11	METAL CHIP	100K	5%	1/10W	
R641	1-249-401-11	CARBON	47	5%	1/4W	
R642	1-249-401-11	CARBON	47	5%	1/4W	
R643	1-216-833-11	METAL CHIP	10K	5%	1/10W	
R644	1-216-821-11	METAL CHIP	1K	5%	1/10W	
R645	1-216-825-11	METAL CHIP	2.2K	5%	1/10W	
R646	1-216-809-11	METAL CHIP	100	5%	1/10W	
R647	1-216-797-11	METAL CHIP	10	5%	1/10W	
R648	1-216-841-11	METAL CHIP	47K	5%	1/10W	
R649	1-216-825-11	METAL CHIP	2.2K	5%	1/10W	
R650	1-216-829-11	METAL CHIP	4.7K	5%	1/10W	
R651	1-216-829-11	METAL CHIP	4.7K	5%	1/10W	
R652	1-216-809-11	METAL CHIP	100	5%	1/10W	
R655	1-216-833-11	METAL CHIP	10K	5%	1/10W	
R656	1-216-821-11	METAL CHIP	1K	5%	1/10W	
R657	1-216-843-11	METAL CHIP	68K	5%	1/10W	
⚠ R658	1-215-890-51	METAL OXIDE	470	5%	2W	F
⚠ R662	1-215-890-51	METAL OXIDE	470	5%	2W	F
R666	1-216-821-11	METAL CHIP	1K	5%	1/10W	
R667	1-216-841-11	METAL CHIP	47K	5%	1/10W	
R669	1-216-845-11	METAL CHIP	100K	5%	1/10W	
R670	1-216-833-11	METAL CHIP	10K	5%	1/10W	
R672	1-216-833-11	METAL CHIP	10K	5%	1/10W	
R673	1-216-817-11	METAL CHIP	470	5%	1/10W	
R674	1-249-401-11	CARBON	47	5%	1/4W	
R675	1-249-401-11	CARBON	47	5%	1/4W	
R676	1-216-833-11	METAL CHIP	10K	5%	1/10W	
R677	1-216-833-11	METAL CHIP	10K	5%	1/10W	
R678	1-216-841-11	METAL CHIP	47K	5%	1/10W	
R681	1-216-837-11	METAL CHIP	22K	5%	1/10W	
R684	1-216-837-11	METAL CHIP	22K	5%	1/10W	
R685	1-216-829-11	METAL CHIP	4.7K	5%	1/10W	
R686	1-216-842-11	METAL CHIP	56K	5%	1/10W	
R687	1-216-837-11	METAL CHIP	22K	5%	1/10W	
R688	1-216-817-11	METAL CHIP	470	5%	1/10W	
R689	1-216-838-11	METAL CHIP	27K	5%	1/10W	
R690	1-216-825-11	METAL CHIP	2.2K	5%	1/10W	
R691	1-216-833-11	METAL CHIP	10K	5%	1/10W	

MAIN **PANEL**

Ref. No.	Part No.	Description			Remark
R692	1-216-829-11	METAL CHIP	4.7K	5%	1/10W
R693	1-216-821-11	METAL CHIP	1K	5%	1/10W
R697	1-216-864-11	SHORT CHIP	0		
R698	1-216-837-11	METAL CHIP	22K	5%	1/10W
R700	1-216-829-11	METAL CHIP	4.7K	5%	1/10W
R701	1-216-829-11	METAL CHIP	4.7K	5%	1/10W
R702	1-216-829-11	METAL CHIP	4.7K	5%	1/10W
R704	1-216-829-11	METAL CHIP	4.7K	5%	1/10W
R705	1-216-837-11	METAL CHIP	22K	5%	1/10W
R706	1-216-813-11	METAL CHIP	220	5%	1/10W
R707	1-216-813-11	METAL CHIP	220	5%	1/10W
R709	1-216-864-11	SHORT CHIP	0		
R715	1-216-809-11	METAL CHIP	100	5%	1/10W
R723	1-216-789-11	METAL CHIP	2.2	5%	1/10W
R727	1-216-829-11	METAL CHIP	4.7K	5%	1/10W
R728	1-216-829-11	METAL CHIP	4.7K	5%	1/10W
R731	1-249-395-11	CARBON	15	5%	1/4W
R732	1-249-395-11	CARBON	15	5%	1/4W
R733	1-249-395-11	CARBON	15	5%	1/4W
R734	1-216-841-11	METAL CHIP	47K	5%	1/10W
R735	1-216-829-11	METAL CHIP	4.7K	5%	1/10W
R736	1-216-833-11	METAL CHIP	10K	5%	1/10W
R737	1-216-829-11	METAL CHIP	4.7K	5%	1/10W
R738	1-216-817-11	METAL CHIP	470	5%	1/10W
R741	1-216-789-11	METAL CHIP	2.2	5%	1/10W
R742	1-216-789-11	METAL CHIP	2.2	5%	1/10W
R749	1-216-829-11	METAL CHIP	4.7K	5%	1/10W
R750	1-216-829-11	METAL CHIP	4.7K	5%	1/10W
R751	1-216-830-11	METAL CHIP	5.6K	5%	1/10W
R752	1-216-830-11	METAL CHIP	5.6K	5%	1/10W
R753	1-216-830-11	METAL CHIP	5.6K	5%	1/10W
R754	1-216-830-11	METAL CHIP	5.6K	5%	1/10W
R760	1-216-789-11	METAL CHIP	2.2	5%	1/10W
R761	1-216-817-11	METAL CHIP	470	5%	1/10W
R762	1-216-817-11	METAL CHIP	470	5%	1/10W
R763	1-216-827-11	METAL CHIP	3.3K	5%	1/10W
R764	1-216-827-11	METAL CHIP	3.3K	5%	1/10W
R765	1-216-827-11	METAL CHIP	3.3K	5%	1/10W
R767	1-216-791-11	METAL CHIP	3.3	5%	1/10W
R768	1-216-833-11	METAL CHIP	10K	5%	1/10W
R770	1-216-845-11	METAL CHIP	100K	5%	1/10W
R771	1-216-801-11	METAL CHIP	22	5%	1/10W
R772	1-216-834-11	METAL CHIP	12K	5%	1/10W
R773	1-216-849-11	METAL CHIP	220K	5%	1/10W
R774	1-216-833-11	METAL CHIP	10K	5%	1/10W
R775	1-216-849-11	METAL CHIP	220K	5%	1/10W
R776	1-216-841-11	METAL CHIP	47K	5%	1/10W
R781	1-216-845-11	METAL CHIP	100K	5%	1/10W
R782	1-216-833-11	METAL CHIP	10K	5%	1/10W
R787	1-216-835-11	METAL CHIP	15K	5%	1/10W
R788	1-216-835-11	METAL CHIP	15K	5%	1/10W
R791	1-216-845-11	METAL CHIP	100K	5%	1/10W
R792	1-216-849-11	METAL CHIP	220K	5%	1/10W
R793	1-216-827-11	METAL CHIP	3.3K	5%	1/10W
R794	1-216-833-11	METAL CHIP	10K	5%	1/10W
R795	1-216-848-11	METAL CHIP	180K	5%	1/10W
R796	1-216-851-11	METAL CHIP	330K	5%	1/10W
R797	1-216-841-11	METAL CHIP	47K	5%	1/10W
R798	1-216-829-11	METAL CHIP	4.7K	5%	1/10W
R799	1-216-818-11	METAL CHIP	560	5%	1/10W

Ref. No.	Part No.	Description			Remark
R801	1-216-821-11	METAL CHIP	1K	5%	1/10W
R802	1-216-821-11	METAL CHIP	1K	5%	1/10W
R803	1-216-821-11	METAL CHIP	1K	5%	1/10W
R804	1-216-821-11	METAL CHIP	1K	5%	1/10W
R805	1-216-809-11	METAL CHIP	100	5%	1/10W
R806	1-216-833-11	METAL CHIP	10K	5%	1/10W
R807	1-216-848-11	METAL CHIP	180K	5%	1/10W
R808	1-216-864-11	SHORT CHIP	0		
R809	1-216-837-11	METAL CHIP	22K	5%	1/10W
R810	1-216-797-11	METAL CHIP	10	5%	1/10W
R811	1-216-839-11	METAL CHIP	33K	5%	1/10W
R879	1-216-809-11	METAL CHIP	100	5%	1/10W
R880	1-216-809-11	METAL CHIP	100	5%	1/10W
R881	1-216-809-11	METAL CHIP	100	5%	1/10W
R882	1-216-801-11	METAL CHIP	22	5%	1/10W
		< RELAY >			
RY602	1-755-421-11	RELAY			
		< TERMINAL >			
TB602	1-780-314-11	TERMINAL BOARD (SPEAKERS IMPEDANS: USE 6 Ω)			
		< VIBRATOR >			
X801	1-814-067-11	OSCILLATOR, CRYSTAL (32.768kHz)			

****

		PANEL BOARD			
		**********			
	2-649-178-01	PLATE, LIGHT GUIDE			
	2-649-179-01	SHEET (LCD)			
	2-665-175-01	SHEET (REFLECTOR)			
		< CAPACITOR >			
C301	1-164-156-11	CERAMIC CHIP	0.1uF		25V
C302	1-104-658-91	ELECT	100uF	20%	10V
C303	1-126-964-11	ELECT	10uF	20%	50V
C304	1-107-826-11	CERAMIC CHIP	0.1uF	10%	16V
C305	1-126-964-11	ELECT	10uF	20%	50V
C306	1-104-655-91	ELECT	470uF	20%	6.3V
C317	1-162-960-11	CERAMIC CHIP	220PF	10%	50V
C319	1-162-918-11	CERAMIC CHIP	18PF	5%	50V
C320	1-162-919-11	CERAMIC CHIP	22PF	5%	50V
C321	1-164-156-11	CERAMIC CHIP	0.1uF		25V
C330	1-164-156-11	CERAMIC CHIP	0.1uF		25V
C332	1-162-970-11	CERAMIC CHIP	0.01uF	10%	25V
C336	1-164-156-11	CERAMIC CHIP	0.1uF		25V
C338	1-162-964-11	CERAMIC CHIP	0.001uF	10%	50V
C340	1-164-156-11	CERAMIC CHIP	0.1uF		25V
C341	1-164-156-11	CERAMIC CHIP	0.1uF		25V
C342	1-162-964-11	CERAMIC CHIP	0.001uF	10%	50V
C450	1-162-962-11	CERAMIC CHIP	470PF	10%	50V
C451	1-126-923-91	ELECT	220uF	20%	10V
C452	1-126-925-91	ELECT	470uF	20%	10V
C453	1-162-966-11	CERAMIC CHIP	0.0022uF	10%	50V
C454	1-126-925-91	ELECT	470uF	20%	10V
C497	1-164-156-11	CERAMIC CHIP	0.1uF		25V

PANEL

Ref. No.	Part No.	Description			Remark
		< CONNECTOR >			
CN301	1-784-747-11	CONNECTOR, FFC 25P			
CN305	1-779-548-21	CONNECTOR, FFC (LIF (NON-ZIF)) 11P			
CN451	1-779-293-11	CONNECTOR, FFC (LIF (NON-ZIF)) 25P			
		< DIODE >			
D301	6-501-722-01	DIODE MAZ8043GMLS0			
D302	6-501-817-01	DIODE MA2J1110GLS0			
D303	6-500-334-01	DIODE MC2836-T112-1			
D304	6-501-817-01	DIODE MA2J1110GLS0			
D306	6-503-056-01	LED 1L0341Y23E0CA602-II (STANDBY)			
D400	6-501-582-01	DIODE 1N4002-A2			
D451	6-501-719-01	DIODE MAZ8039GHLS0			
D452	6-501-582-01	DIODE 1N4002-A2			
D453	6-501-582-01	DIODE 1N4002-A2			
		< IC >			
IC301	A-1786-565-A	IC MB90F831PF-G-SPE1 (for SERVICE)			
IC302	6-600-767-01	IC PNA4823M02S0			
		< JUMPER RESISTOR >			
JR306	1-216-864-11	SHORT CHIP	0		
JR309	1-216-864-11	SHORT CHIP	0		
		< LIQUID CRYSTAL DISPLAY >			
LCD301	1-811-042-11	DISPLAY PANEL, LIQUID CRYSTAL			
		< TRANSISTOR >			
Q301	8-729-120-28	TRANSISTOR	2SC1623-L5L6		
Q302	8-729-037-13	TRANSISTOR	KTA1271Y		
Q303	8-729-120-28	TRANSISTOR	2SC1623-L5L6		
Q304	8-729-120-28	TRANSISTOR	2SC1623-L5L6		
Q305	8-729-120-28	TRANSISTOR	2SC1623-L5L6		
Q306	8-729-038-28	TRANSISTOR	RT1N441C-TP-1		
Q451	8-729-036-86	TRANSISTOR	KTC3203Y-AT		
Q452	8-729-120-28	TRANSISTOR	2SC1623-L5L6		
		< RESISTOR >			
R302	1-216-809-11	METAL CHIP	100	5%	1/10W
R303	1-216-809-11	METAL CHIP	100	5%	1/10W
R304	1-216-809-11	METAL CHIP	100	5%	1/10W
R305	1-216-809-11	METAL CHIP	100	5%	1/10W
R306	1-216-809-11	METAL CHIP	100	5%	1/10W
R307	1-216-809-11	METAL CHIP	100	5%	1/10W
R308	1-216-809-11	METAL CHIP	100	5%	1/10W
R309	1-216-809-11	METAL CHIP	100	5%	1/10W
R310	1-216-809-11	METAL CHIP	100	5%	1/10W
R311	1-216-809-11	METAL CHIP	100	5%	1/10W
R312	1-216-809-11	METAL CHIP	100	5%	1/10W
R313	1-216-809-11	METAL CHIP	100	5%	1/10W
R315	1-216-809-11	METAL CHIP	100	5%	1/10W
R318	1-216-809-11	METAL CHIP	100	5%	1/10W
R319	1-216-809-11	METAL CHIP	100	5%	1/10W
R320	1-216-809-11	METAL CHIP	100	5%	1/10W
R321	1-216-809-11	METAL CHIP	100	5%	1/10W
R324	1-216-809-11	METAL CHIP	100	5%	1/10W
R326	1-216-809-11	METAL CHIP	100	5%	1/10W
R327	1-216-809-11	METAL CHIP	100	5%	1/10W
R328	1-216-833-11	METAL CHIP	10K	5%	1/10W

Ref. No.	Part No.	Description			Remark
R329	1-216-825-11	METAL CHIP	2.2K	5%	1/10W
R330	1-216-819-11	METAL CHIP	680	5%	1/10W
R331	1-216-845-11	METAL CHIP	100K	5%	1/10W
R332	1-216-833-11	METAL CHIP	10K	5%	1/10W
R333	1-216-845-11	METAL CHIP	100K	5%	1/10W
R334	1-216-827-11	METAL CHIP	3.3K	5%	1/10W
R335	1-216-837-11	METAL CHIP	22K	5%	1/10W
R336	1-216-833-11	METAL CHIP	10K	5%	1/10W
R337	1-216-813-11	METAL CHIP	220	5%	1/10W
R363	1-216-837-11	METAL CHIP	22K	5%	1/10W
R370	1-216-821-11	METAL CHIP	1K	5%	1/10W
R373	1-216-833-11	METAL CHIP	10K	5%	1/10W
R375	1-216-805-11	METAL CHIP	47	5%	1/10W
R376	1-216-822-11	METAL CHIP	1.2K	5%	1/10W
R377	1-216-809-11	METAL CHIP	100	5%	1/10W
R378	1-216-829-11	METAL CHIP	4.7K	5%	1/10W
R379	1-216-829-11	METAL CHIP	4.7K	5%	1/10W
R381	1-216-821-11	METAL CHIP	1K	5%	1/10W
R382	1-216-809-11	METAL CHIP	100	5%	1/10W
R383	1-216-809-11	METAL CHIP	100	5%	1/10W
R384	1-216-839-11	METAL CHIP	33K	5%	1/10W
R390	1-216-833-11	METAL CHIP	10K	5%	1/10W
R391	1-216-830-11	METAL CHIP	5.6K	5%	1/10W (E4)
R391	1-216-841-11	METAL CHIP	47K	5%	1/10W (E2)
R391	1-216-845-11	METAL CHIP	100K	5%	1/10W (E51, MX, AR)
R392	1-216-833-11	METAL CHIP	10K	5%	1/10W
R396	1-216-851-11	METAL CHIP	330K	5%	1/10W
R400	1-216-821-11	METAL CHIP	1K	5%	1/10W
R401	1-216-821-11	METAL CHIP	1K	5%	1/10W
R402	1-216-845-11	METAL CHIP	100K	5%	1/10W
R419	1-216-838-11	METAL CHIP	27K	5%	1/10W
R420	1-216-845-11	METAL CHIP	100K	5%	1/10W
R429	1-216-845-11	METAL CHIP	100K	5%	1/10W
R430	1-216-845-11	METAL CHIP	100K	5%	1/10W
R431	1-216-837-11	METAL CHIP	22K	5%	1/10W
R434	1-216-809-11	METAL CHIP	100	5%	1/10W
R449	1-216-864-11	SHORT CHIP	0		
R450	1-216-833-11	METAL CHIP	10K	5%	1/10W
R451	1-216-809-11	METAL CHIP	100	5%	1/10W
R452	1-216-837-11	METAL CHIP	22K	5%	1/10W
R453	1-216-821-11	METAL CHIP	1K	5%	1/10W
R454	1-249-403-11	CARBON	68	5%	1/4W
R455	1-249-403-11	CARBON	68	5%	1/4W
R456	1-249-403-11	CARBON	68	5%	1/4W
R458	1-216-864-11	SHORT CHIP	0		
R459	1-216-864-11	SHORT CHIP	0		
R460	1-216-864-11	SHORT CHIP	0		
R461	1-216-864-11	SHORT CHIP	0		
R462	1-216-864-11	SHORT CHIP	0		
R463	1-216-864-11	SHORT CHIP	0		
R464	1-216-864-11	SHORT CHIP	0		
R465	1-216-864-11	SHORT CHIP	0		
R466	1-216-864-11	SHORT CHIP	0		
R470	1-216-833-11	METAL CHIP	10K	5%	1/10W
R471	1-216-821-11	METAL CHIP	1K	5%	1/10W
R472	1-216-822-11	METAL CHIP	1.2K	5%	1/10W
R473	1-216-823-11	METAL CHIP	1.5K	5%	1/10W
R474	1-216-825-11	METAL CHIP	2.2K	5%	1/10W

PANEL PT-SWITCH REG USB

Ref. No.	Part No.	Description			Remark
R475	1-216-826-11	METAL CHIP	2.7K	5%	1/10W
R476	1-216-828-11	METAL CHIP	3.9K	5%	1/10W
R480	1-216-833-11	METAL CHIP	10K	5%	1/10W
R481	1-216-821-11	METAL CHIP	1K	5%	1/10W
R482	1-216-822-11	METAL CHIP	1.2K	5%	1/10W
R483	1-216-823-11	METAL CHIP	1.5K	5%	1/10W
R484	1-216-825-11	METAL CHIP	2.2K	5%	1/10W
R485	1-216-826-11	METAL CHIP	2.7K	5%	1/10W
R486	1-216-828-11	METAL CHIP	3.9K	5%	1/10W
R487	1-218-867-11	METAL CHIP	6.8K	0.5%	1/10W
R490	1-216-833-11	METAL CHIP	10K	5%	1/10W
R491	1-216-821-11	METAL CHIP	1K	5%	1/10W
R492	1-216-829-11	METAL CHIP	4.7K	5%	1/10W
R493	1-216-843-11	METAL CHIP	68K	5%	1/10W
R494	1-216-839-11	METAL CHIP	33K	5%	1/10W
R495	1-216-833-11	METAL CHIP	10K	5%	1/10W
R496	1-216-833-11	METAL CHIP	10K	5%	1/10W
R497	1-216-817-11	METAL CHIP	470	5%	1/10W
R498	1-216-821-11	METAL CHIP	1K	5%	1/10W
R499	1-216-809-11	METAL CHIP	100	5%	1/10W
		< ROTARY ENCODER >			
S491	1-786-417-11	ENCODER, ROTARY (VOLUME)			
		< SWITCH >			
SW471	1-771-410-21	SWITCH, TACTILE (FUNCTION)			
SW472	1-771-410-21	SWITCH, TACTILE (REC TO USB)			
SW473	1-771-410-21	SWITCH, TACTILE (🗀 –)			
SW474	1-771-410-21	SWITCH, TACTILE (▶II)			
SW475	1-771-410-21	SWITCH, TACTILE (– TUNING I◁◁ ◀◀)			
SW476	1-771-410-21	SWITCH, TACTILE (DSGX)			
SW481	1-771-410-21	SWITCH, TACTILE (CD)			
SW482	1-771-410-21	SWITCH, TACTILE (USB)			
SW483	1-771-410-21	SWITCH, TACTILE (ENTER)			
SW484	1-771-410-21	SWITCH, TACTILE (🗀 +)			
SW485	1-771-410-21	SWITCH, TACTILE (■)			
SW486	1-771-410-21	SWITCH, TACTILE (TUNING + ▶▶ ▷▷I)			
SW487	1-771-410-21	SWITCH, TACTILE (OPTIONS)			
SW491	1-771-410-21	SWITCH, TACTILE (I/⏻)			
		< VIBRATOR >			
X301	1-814-067-11	OSCILLATOR, CRYSTAL (32.768kHz)			
X302	1-813-548-31	VIBRATOR, CERAMIC (6MHz)			

****

PT-SWITCH BOARD
****

< CAPACITOR >

C051	1-165-621-11	CERAMIC CHIP	0.1uF		50V

< CONNECTOR >

⚠ CN051	1-793-660-11	PIN, CONNECTOR (PC BOARD) 3P			

< DIODE >

D051	6-500-334-01	DIODE	MC2836-T112-1		
D052	6-500-335-01	DIODE	MC2838-T112-1		
D053	6-500-335-01	DIODE	MC2838-T112-1		

Ref. No.	Part No.	Description			Remark
		< TRANSFORMER >			
⚠ PT051	1-445-105-11	TRANSFORMER, POWER			
		< RELAY >			
⚠ RY051	1-755-276-22	RELAY, POWER (MX)			
⚠ RY052	1-755-496-11	RELAY (EXCEPT MX)			
		< VOLTAGE SELECTOR >			
⚠ S051	1-786-408-11	SELECTOR, VOLTAGE (SWS-2301) (VOLTAGE SELECTOR) (E2, E4, E51)			

****

REG BOARD
****

< CAPACITOR >

C697	1-164-156-11	CERAMIC CHIP	0.1uF		25V
C698	1-164-156-11	CERAMIC CHIP	0.1uF		25V

< IC >

IC690	6-713-032-01	IC KIA7809API-U/PF			

****

USB BOARD
****

< CAPACITOR >

C900	1-117-681-11	ELECT CHIP	100uF	20%	16V
C901	1-107-826-11	CERAMIC CHIP	0.1uF	10%	16V
C902	1-162-919-11	CERAMIC CHIP	22PF	5%	50V
C903	1-162-919-11	CERAMIC CHIP	22PF	5%	50V
C904	1-162-970-11	CERAMIC CHIP	0.01uF	10%	25V
C905	1-162-927-11	CERAMIC CHIP	100PF	5%	50V
C906	1-162-927-11	CERAMIC CHIP	100PF	5%	50V
C907	1-162-927-11	CERAMIC CHIP	100PF	5%	50V
C908	1-162-927-11	CERAMIC CHIP	100PF	5%	50V
C909	1-164-156-11	CERAMIC CHIP	0.1uF		25V
C915	1-162-923-11	CERAMIC CHIP	47PF	5%	50V
C916	1-162-923-11	CERAMIC CHIP	47PF	5%	50V
C917	1-162-923-11	CERAMIC CHIP	47PF	5%	50V
C918	1-162-923-11	CERAMIC CHIP	47PF	5%	50V
C919	1-162-923-11	CERAMIC CHIP	47PF	5%	50V
C920	1-162-923-11	CERAMIC CHIP	47PF	5%	50V
C921	1-162-927-11	CERAMIC CHIP	100PF	5%	50V
C950	1-107-826-11	CERAMIC CHIP	0.1uF	10%	16V
C951	1-162-910-11	CERAMIC CHIP	5PF	0.25PF	50V
C952	1-162-910-11	CERAMIC CHIP	5PF	0.25PF	50V
C953	1-164-156-11	CERAMIC CHIP	0.1uF		25V
C954	1-126-601-11	ELECT CHIP	2.2uF	20%	50V
C955	1-165-884-11	CERAMIC CHIP	2.2uF	10%	6.3V

< CONNECTOR >

CN901	1-784-382-51	CONNECTOR, FFC/FPC 25P			
CN902	1-784-382-51	CONNECTOR, FFC/FPC 25P			
CN903	1-764-250-11	PIN, CONNECTOR (PC BOARD) 4P			
CN910	1-784-366-51	CONNECTOR, FFC/FPC 7P			

< IC >

IC901	A-1768-193-A	IC LC87F1JJ2AU-SQFP-H (for SERVICE)			

Ref. No.	Part No.	Description			Remark
		< RESISTOR >			
R900	1-216-864-11	SHORT CHIP	0		
R901	1-216-809-11	METAL CHIP	100	5%	1/10W
R902	1-216-809-11	METAL CHIP	100	5%	1/10W
R903	1-216-857-11	METAL CHIP	1M	5%	1/10W
R904	1-216-864-11	SHORT CHIP	0		
R905	1-216-809-11	METAL CHIP	100	5%	1/10W
R906	1-216-809-11	METAL CHIP	100	5%	1/10W
R907	1-216-809-11	METAL CHIP	100	5%	1/10W
R908	1-216-809-11	METAL CHIP	100	5%	1/10W
R909	1-216-809-11	METAL CHIP	100	5%	1/10W
R910	1-216-845-11	METAL CHIP	100K	5%	1/10W
R911	1-216-809-11	METAL CHIP	100	5%	1/10W
R912	1-216-845-11	METAL CHIP	100K	5%	1/10W
R913	1-216-809-11	METAL CHIP	100	5%	1/10W
R914	1-216-845-11	METAL CHIP	100K	5%	1/10W
R915	1-216-809-11	METAL CHIP	100	5%	1/10W
R916	1-216-809-11	METAL CHIP	100	5%	1/10W
R917	1-216-809-11	METAL CHIP	100	5%	1/10W
R918	1-216-805-11	METAL CHIP	47	5%	1/10W
R919	1-216-805-11	METAL CHIP	47	5%	1/10W
R920	1-216-805-11	METAL CHIP	47	5%	1/10W
R921	1-216-809-11	METAL CHIP	100	5%	1/10W
R922	1-216-809-11	METAL CHIP	100	5%	1/10W
R923	1-216-809-11	METAL CHIP	100	5%	1/10W
R924	1-216-809-11	METAL CHIP	100	5%	1/10W
R951	1-216-835-11	METAL CHIP	15K	5%	1/10W
R952	1-216-835-11	METAL CHIP	15K	5%	1/10W
R953	1-216-803-11	METAL CHIP	33	5%	1/10W
R954	1-216-803-11	METAL CHIP	33	5%	1/10W
R955	1-216-864-11	SHORT CHIP	0		
		< VIBRATOR >			
X901	1-814-365-11	QUARTZ CRYSTAL UNITS (12MHz)			

****

USB-JACK BOARD
****

Ref. No.	Part No.	Description			Remark
		< CAPACITOR >			
C561	1-126-923-91	ELECT	220uF	20%	10V
C565	1-165-908-11	CERAMIC CHIP	1uF	10%	10V
		< CONNECTOR >			
CN560	1-794-548-21	CONNECTOR, USB (A) (⭠)			
		< JUMPER RESISTOR >			
FB561	1-216-295-00	SHORT CHIP	0		
FB562	1-216-295-00	SHORT CHIP	0		
		< RESISTOR >			
R561	1-216-789-11	METAL CHIP	2.2	5%	1/10W
R562	1-216-789-11	METAL CHIP	2.2	5%	1/10W

****

Ref. No.	Part No.	Description	Remark
		MISCELLANEOUS **********	
58	1-832-814-21	CABLE, FLEXIBLE FLAT (9 CORE)	
61	1-832-635-21	CABLE, FLEXIBLE FLAT (25 CORE)	
62	1-838-369-21	CABLE, FLEXIBLE FLAT (25 CORE)	
63	1-838-370-21	CABLE, FLEXIBLE FLAT (25 CORE)	
103	1-832-796-21	CABLE, FLEXIBLE FLAT (5 CORE)	
⚠ 107	1-834-966-41	POWER-SUPPLY CORD (E2, E4, E51)	
⚠ 107	1-837-312-11	CORD, POWER-SUPPLY (AR)	
⚠ 107	1-837-344-11	CORD, POWER-SUPPLY (MX)	
152	1-834-268-21	WIRE (FLAT TYPE) (16 CORE)	
⚠ 157	A-1780-028-A	OPTICAL PICK-UP BLOCK (DA11MMVGP) (Including sled motor (M402), spindle motor (M401))	
164	1-452-899-31	MAGNET	
⚠ M601	1-787-344-11	FAN, DC	
⚠ PT054	1-445-881-11	TRANSFORMER, POWER (MX)	
⚠ PT054	1-445-882-11	TRANSFORMER, POWER (E2, E4, E51, AR)	
S001	1-771-853-11	SWITCH, DETECTION (LIMIT)	
SW305	1-692-960-11	SWITCH, PUSH (1 KEY) (CD LID OPEN/CLOSE DETECT)	

****

		ACCESSORY **********	
⚠	1-569-008-33	ADAPTOR, CONVERSION (E2, E4, E51)	

REVISION HISTORY

Checking the version allows you to jump to the revised page.
Also, clicking the version at the top of the revised page allows you to jump to the next revised page.

Ver.	Date	Description of Revision
1.0	2010.06	New