HCD-EC69i/EC79i/EC99i

SERVICE MANUAL

US Model
Canadian Model
UK Model
Australian Model

Ver. 1.1 2009.05

Photo: HCD-EC69i

- HCD-EC69i is the amplifier, CD player, tuner and iPod section in MHC-EC69i.
- HCD-EC79i is the amplifier, CD player, tuner and iPod section in MHC-EC79i.
- HCD-EC99i is the amplifier, CD player, tuner and iPod section in MHC-EC99i.

- iPod is a trademark of Apple Inc., registered in the U.S. and other countries.
- MPEG Layer-3 audio coding technology and patents licensed from Fraunhofer IIS and Thomson.
- All other trademarks and registered trademarks are of their respective holders. In this manual, ™ and ® marks are not specified.

Model Name Using Similar Mechanism	CDM76A-K6BD90-WOD	NEW
Mechanism Type	EC79i: UK, Australian/EC99i	CDM76A-K6BD90-WOD
Base Unit Name	EC69i/EC79i: US, Canadian	BU-K8BD90-WOD
	EC79i: UK, Australian/EC99i	BU-K6BD90-WOD
Optical Pick-up Block Name	EC69i/EC79i: US, Canadian	KSM-213CDP
	EC79i: UK, Australian/EC99i	KSM-213DCP

SPECIFICATIONS

Main unit
AUDIO POWER SPECIFICATIONS
POWER OUTPUT AND TOTAL HARMONIC DISTORTION:
(HCD-EC99i, HCD-EC79i The United States model only)
Low channel
With 8 ohm loads, both channels driven, from 120 – 10,000 Hz; rated 60 watts per channel minimum RMS power, with no more than 0.7% total harmonic distortion from 250 milliwatts to rated output.
High channel
With 8 ohm loads, both channels driven, from 2,000 – 13,000 Hz; rated 60 watts per channel minimum RMS power, with no more than 0.7% total harmonic distortion from 250 milliwatts to rated output.

AUDIO POWER SPECIFICATIONS
POWER OUTPUT AND TOTAL HARMONIC DISTORTION:
(HCD-EC69i The United States model only)
With 6 ohm loads, both channels driven, from 120 – 10,000 Hz; 30 watts per channel minimum RMS power, with no more than 0.7% total harmonic distortion from 250 milliwatts to rated output.

Amplifier section

HCD-EC99i
Front Speaker
RMS output power (reference):
Low channel
95 W + 95 W (per channel at 8 Ω, 1 kHz, 10% THD)
High channel
95 W + 95 W (per channel at 8 Ω, 8 kHz, 10% THD)
Subwoofer
RMS output power (reference):
150 W (at 4 Ω, 80 Hz, 10% THD)

HCD-EC79i
RMS output power (reference):
Low channel
95 W + 95 W (per channel at 8 Ω, 1 kHz, 10% THD)
High channel
95 W + 95 W (per channel at 8 Ω, 8 kHz, 10% THD)

HCD-EC69i
RMS output power (reference):
50 W + 50 W (per channel at 6 Ω, 1 kHz, 10% THD)

Inputs (except for HCD-EC69i)
PC IN (stereo mini jack): Sensitivity 800 mV, impedance 22 kilohms

Outputs
PHONES (stereo mini jack): Accepts headphones with an impedance of 8 Ω or more
SPEAKER: impedance
HCD-EC99i/EC79i: 8 Ω
HCD-EC69i: 6 Ω
SUBWOOFER OUT (HCD-EC99i only): impedance 4 Ω

CD player section
System: Compact disc and digital audio system
Laser Diode Properties
Emission Duration: Continuous
Laser Output*: Less than 44.6μW
* This output is the value measurement at a distance of 200mm from the objective lens surface on the Optical Pick-up Block with 7mm aperture.
Frequency response: 20 Hz — 20 kHz
Signal-to-noise ratio: More than 90 dB
Dynamic range: More than 88 dB

Tuner section
FM stereo, FM/AM superheterodyne tuner
Antenna:
FM lead antenna
AM loop antenna

FM tuner section:
Tuning range
North American model: 87.5 — 108.0 MHz (100 kHz step)
Other models: 87.5 — 108.0 MHz (50 kHz step)
Intermediate frequency: 10.7 MHz

AM tuner section:
Tuning range
North American model:
530 — 1,710 kHz (with 10 kHz tuning interval)
531 — 1,710 kHz (with 9 kHz tuning interval)
Australian model:
531 — 1,710 kHz (with 9 kHz tuning interval)
530 — 1,710 kHz (with 10 kHz tuning interval)
UK model:
531 — 1,602 kHz (with 9 kHz tuning interval)
Intermediate frequency: 450 kHz

iPod section
Compatible iPod models:

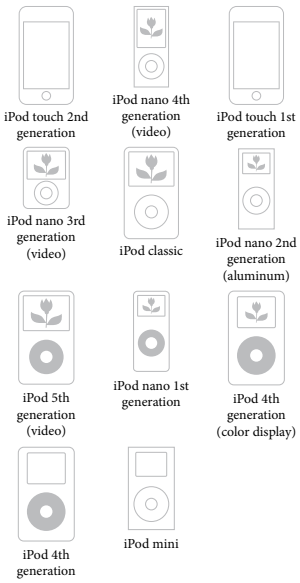

General
Power requirements:
North American model: AC 120 V, 60 Hz
Australian model: AC 230 — 240 V, 50/60 Hz
UK model: AC 230 V, 50/60 Hz

Power consumption:
HCD-EC99i
250 W
(0.5 W at the Power Saving Mode)
HCD-EC79i
200 W
(0.5 W at the Power Saving Mode)
HCD-EC69i
80 W
(0.5 W at the Power Saving Mode)

Dimensions (w/h/d) (excl. speakers):
HCD-EC99i
Approx. 200 × 311 × 375 mm
HCD-EC79i (Australian and UK models only)
Approx. 200 × 311 × 375 mm
HCD-EC79i (North American model only)
Approx. 200 × 306 × 375 mm
HCD-EC69i
Approx. 200 × 306 × 305 mm

Mass (excl. speakers):
HCD-EC99i
Approx. 6.2 kg
HCD-EC79i (Australian and UK models only)
Approx. 6.0 kg
HCD-EC79i (North American model only)
Approx. 5.7 kg
HCD-EC69i
Approx. 3.8 kg

Design and specifications are subject to change without notice.

COMPACT DISC RECEIVER

9-889-427-02
2009E05-1

© 2009.05

Sony Corporation
Audio&Video Business Group
Published by Sony Techno Create Corporation

SONY®

NOTES ON CHIP COMPONENT REPLACEMENT

- Never reuse a disconnected chip component.
- Notice that the minus side of a tantalum capacitor may be damaged by heat.

FLEXIBLE CIRCUIT BOARD REPAIRING

- Keep the temperature of soldering iron around 270 °C during repairing.
- Do not touch the soldering iron on the same conductor of the circuit board (within 3 times).
- Be careful not to apply force on the conductor when soldering or unsoldering.

CAUTION
Use of controls or adjustments or performance of procedures other than those specified herein may result in hazardous radiation exposure.

CLASS 1 LASER PRODUCT
LUOKAN 1 LASERLAITE
KLASS 1 LASERAPPARAT

This appliance is classified as a CLASS 1 LASER product. This marking is located on the rear exterior.

SAFETY CHECK-OUT

After correcting the original service problem, perform the following safety check before releasing the set to the customer:
Check the antenna terminals, metal trim, "metallized" knobs, screws, and all other exposed metal parts for AC leakage.
Check leakage as described below.

LEAKAGE TEST

The AC leakage from any exposed metal part to earth ground and from all exposed metal parts to any exposed metal part having a return to chassis, must not exceed 0.5 mA (500 microamperes.). Leakage current can be measured by any one of three methods.

1. A commercial leakage tester, such as the Simpson 229 or RCA WT-540A. Follow the manufacturers' instructions to use these instruments.
2. A battery-operated AC milliammeter. The Data Precision 245 digital multimeter is suitable for this job.
3. Measuring the voltage drop across a resistor by means of a VOM or battery-operated AC voltmeter. The "limit" indication is 0.75 V, so analog meters must have an accurate low-voltage scale. The Simpson 250 and Sanwa SH-63Trd are examples of a passive VOM that is suitable. Nearly all battery operated digital multimeters that have a 2 V AC range are suitable. (See Fig. A)

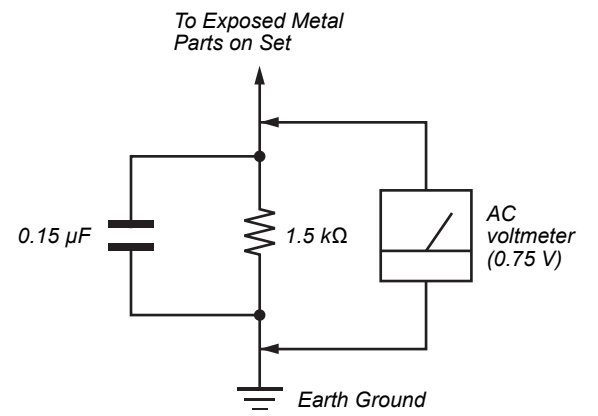

Fig. A. Using an AC voltmeter to check AC leakage.

SAFETY-RELATED COMPONENT WARNING!

COMPONENTS IDENTIFIED BY MARK ⚠ OR DOTTED LINE WITH MARK ⚠ ON THE SCHEMATIC DIAGRAMS AND IN THE PARTS LIST ARE CRITICAL TO SAFE OPERATION. REPLACE THESE COMPONENTS WITH SONY PARTS WHOSE PART NUMBERS APPEAR AS SHOWN IN THIS MANUAL OR IN SUPPLEMENTS PUBLISHED BY SONY.

ATTENTION AU COMPOSANT AYANT RAPPORT À LA SÉCURITÉ!

LES COMPOSANTS IDENTIFIÉS PAR UNE MARQUE ⚠ SUR LES DIAGRAMMES SCHÉMATIQUES ET LA LISTE DES PIÈCES SONT CRITIQUES POUR LA SÉCURITÉ DE FONCTIONNEMENT. NE REMPLACER CES COMPOSANTS QUE PAR DES PIÈCES SONY DONT LES NUMÉROS SONT DONNÉS DANS CE MANUEL OU DANS LES SUPPLÉMENTS PUBLIÉS PAR SONY.

TABLE OF CONTENTS

1. SERVICING NOTES 4

2. GENERAL 7

3. DISASSEMBLY
3-1. Disassembly Flow 9
3-2. Side Panel (L)/(R) (HCD-EC69i/EC79i: US, Canadian) 10
3-3. Top Panel Block (HCD-EC69i/EC79i: US, Canadian) 10
3-4. Ornament Plate (Dock) or iPod Assy 11
3-5. Base (Dock) 12
3-6. MAIN Board 12
3-7. Front Panel Block (HCD-EC69i/EC79i: US, Canadian) 13
3-8. Base Unit Block (BU-K8BD90-WOD) (HCD-EC69i/EC79i: US, Canadian) 13
3-9. Optical Pick-Up Block (KSM-213CDP) (HCD-EC69i/EC79i: US, Canadian) 14
3-10. Side Panel (L)/(R) (HCD-EC79i: UK, Australian/EC99i) 14
3-11. Top Panel Block (HCD-EC79i: UK, Australian/EC99i) 15
3-12. CD Mechanism Deck (CDM76A-K6BD90-WOD) (HCD-EC79i: UK, Australian/EC99i) 15
3-13 MAIN Board (HCD-EC79i: UK, Australian/EC99i) 16
3-14. Front Panel Block (HCD-EC79i: UK, Australian/EC99i) 16
3-15. Base Unit (BU-K6BD90-WOD) (HCD-EC79i: UK, Australian/EC99i) 17
3-16. Optical Pick-Up Block (KSM-213DCP) (HCD-EC79i: UK, Australian/EC99i) 17
3-17. Belt (CDM76) (HCD-EC79i: UK, Australian/EC99i) 18

4. TEST MODE 19

5. ELECTRICAL ADJUSTMENTS 23

6. DIAGRAMS
6-1. Block Diagram - CD, TUNER Section - 24
6-2. Block Diagram - MAIN Section - 25
6-3. Block Diagram - PANEL, POWER SUPPLY Section - 26
6-4. Printed Wiring Board - CD Board - 28
6-5. Schematic Diagram - CD Board - 29
6-6. Schematic Diagram - MAIN Board (1/2) - 30
6-7. Schematic Diagram - MAIN Board (2/2) - 31
6-8. Printed Wiring Board - MAIN Board - 32
6-9. Printed Wiring Boards - AMP Section - 33
6-10. Schematic Diagram - 2CH-4CH AMP Board - 34
6-11. Schematic Diagram - 3CH AMP Board (EC99i) - 35
6-12. Printed Wiring Boards - PANEL Section - 36
6-13. Schematic Diagram - PANEL Section - 37
6-14. Printed Wiring Boards - AUDIO IN/OUT, KEY, POWER SUPPLY Section - 38
6-15. Schematic Diagram - AUDIO IN/OUT, KEY, POWER SUPPLY Section - 39

7. EXPLODED VIEWS
7-1. Overall Section (HCD-EC69i) 46
7-2. Overall Section (HCD-EC79i/EC99i) 47
7-3. Top Panel Section (HCD-EC69i/EC79i: US, CND) 48
7-4. Top Panel Section (HCD-EC79i: UK, AUS/EC99i) 49
7-5. Front Panel Section 50
7-6. iPod Dock Section 51
7-7. MAIN Board, Chassis Section (HCD-EC69i) 52
7-8. MAIN Board Section (HCD-EC79i/EC99i) 53
7-9. Chassis Section (HCD-EC79i/EC99i) 54

8. ELECTRICAL PARTS LIST 55

Accessories are given in the last of the electrical parts list.

SECTION 1
SERVICING NOTES

NOTES ON HANDLING THE OPTICAL PICK-UP BLOCK OR BASE UNIT

The laser diode in the optical pick-up block may suffer electrostatic break-down because of the potential difference generated by the charged electrostatic load, etc. on clothing and the human body. During repair, pay attention to electrostatic break-down and also use the procedure in the printed matter which is included in the repair parts.
The flexible board is easily damaged and should be handled with care.

NOTES ON LASER DIODE EMISSION CHECK

The laser beam on this model is concentrated so as to be focused on the disc reflective surface by the objective lens in the optical pickup block. Therefore, when checking the laser diode emission, observe from more than 30 cm away from the objective lens.

UNLEADED SOLDER

Boards requiring use of unleaded solder are printed with the lead-free mark (LF) indicating the solder contains no lead.
(**Caution:** Some printed circuit boards may not come printed with the lead free mark due to their particular size)

: LEAD FREE MARK

Unleaded solder has the following characteristics.

- Unleaded solder melts at a temperature about 40 °C higher than ordinary solder.
  Ordinary soldering irons can be used but the iron tip has to be applied to the solder joint for a slightly longer time.
  Soldering irons using a temperature regulator should be set to about 350 °C.
  Caution: The printed pattern (copper foil) may peel away if the heated tip is applied for too long, so be careful!
- Strong viscosity
  Unleaded solder is more viscous (sticky, less prone to flow) than ordinary solder so use caution not to let solder bridges occur such as on IC pins, etc.
- Usable with ordinary solder
  It is best to use only unleaded solder but unleaded solder may also be added to ordinary solder.

RELEASING THE DISC TRAY LOCK (EC79i: UK, Australian/EC99i)

The disc tray lock function for the antitheft of an demonstration disc in the store is equipped.

Releasing Procedure:

1. Press [I/⏻] button to turn the power on.
2. Press the [FUNCTION] button to select CD function.
3. While pressing the [■] button, press the [⏏] button for more 5 seconds).
4. The message "UNLOCKED" is displayed and the disc tray is unlocked.

Note: When "LOCKED" is displayed, the slot lock is not released by turning power on/off with the [I/⏻] button.

NOTE OF REPLACING THE LOADING BOARD (EC79i: UK, Australian/EC99i)

When the LOADING board is damaged, exchange the entire CDM76A Assy.

MODEL IDENTIFICATION
- Back Panel -

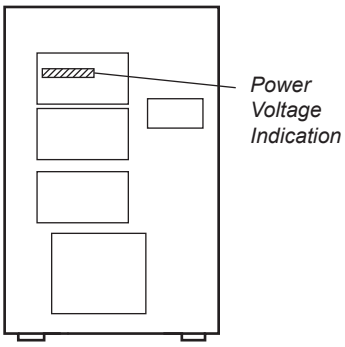

Model	Power Voltage Indication
EC69i: US and Canadian model	120V ∿ 60Hz 80W
EC69i: UK model	230V ∿ 50/60Hz 80W
EC69i: Australian model	230–240V ∿ 50/60Hz 80W
EC79i: US and Canadian model	120V ∿ 60Hz 200W
EC79i: UK model	230V ∿ 50/60Hz 200W
EC79i: Australian model	230–240V ∿ 50/60Hz 200W
EC99i: US and Canadian model	120V ∿ 60Hz 250W
EC99i: UK model	230V ∿ 50/60Hz 250W
EC99i: Australian model	230–240V ∿ 50/60Hz 250W

LASER DIODE AND FOCUS SEARCH OPERATION CHECK (EC69i/EC79i: US, Canadian models)

During normal operation of the equipment, emission of the laser diode is prohibited unless the upper lid is closed while turning on the SW351. (push switch type)
The following checking method for the laser diode is operable.

- **Method**
  Emission of the laser diode is visually checked.
  1. Open the upper lid.
  2. Push the SW351 as shown in Fig.1.
  Note: Do not push the detection lever strongly, or it may be bent or damaged.
  3. Check the object lens for confirming normal emission of the laser diode. If not emitting, there is a trouble in the automatic power control circuit or the optical pick-up.
  In this operation, the object lens will move up and down 2 times along with inward motion for the focus search.

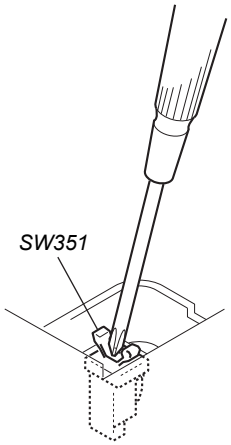

Fig. 1. Method to push the SW351

HOW TO REMOVE THE KNOB (VOL)

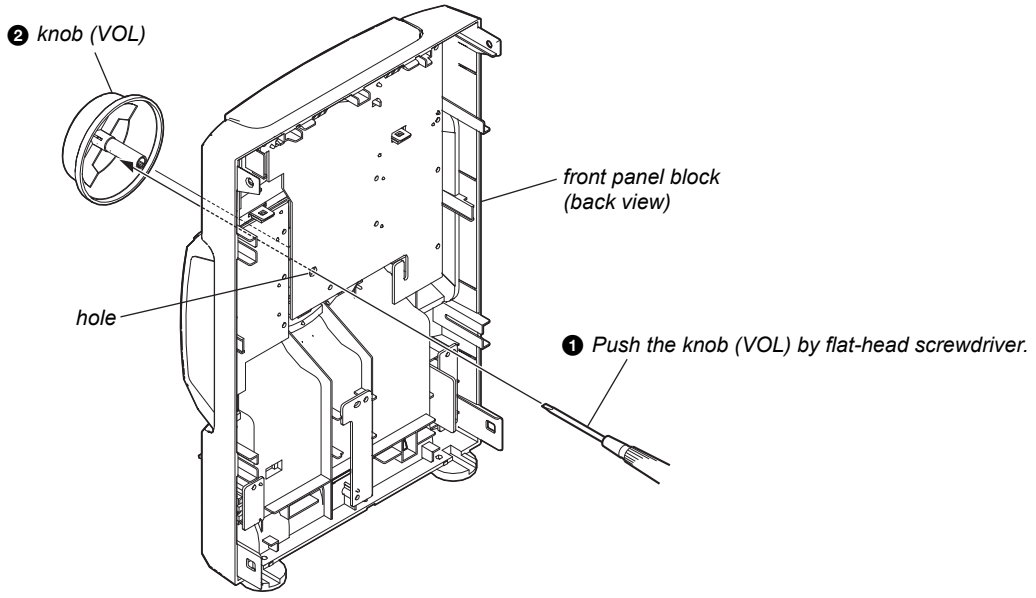

CAPACITOR DISCHARGE FOR ELECTRIC SHOCK PREVENTION

Note: *Please take out the top panel block and side panel (L/R) from a set refer to DISASSEMBLY (from Page 10).*

In checking the MAIN board, make a capacitor discharge of C622 and C626 for electric shock prevention.

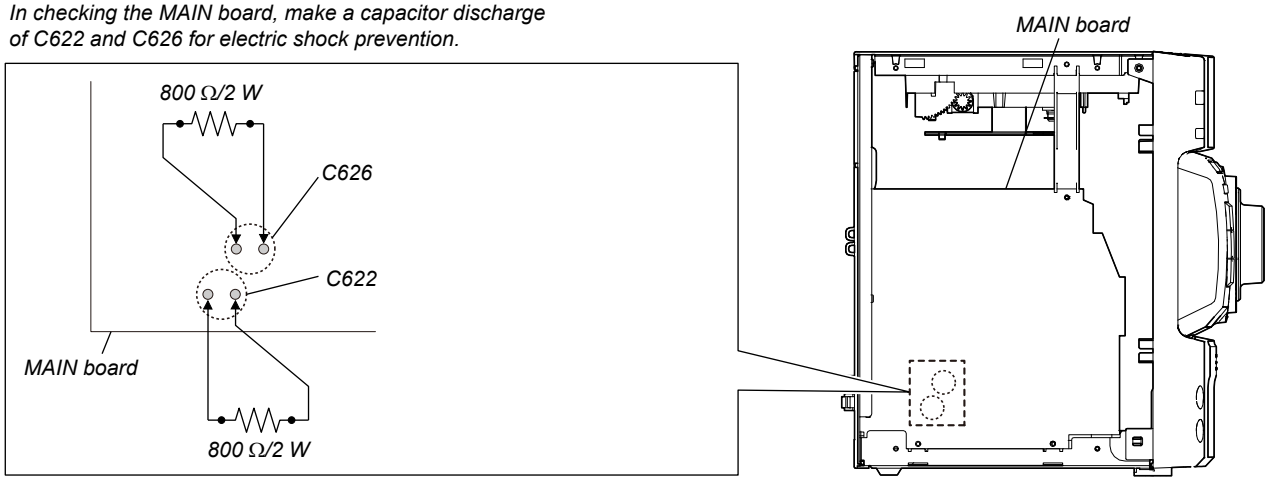

HOW TO OPEN THE TRAY WHEN POWER SWITCH TURN OFF (HCD-EC79i: UK, Australian/EC99i only)

Note: *Please take out the top panel block from a set refer to DISASSEMBLY (from Page 15).*

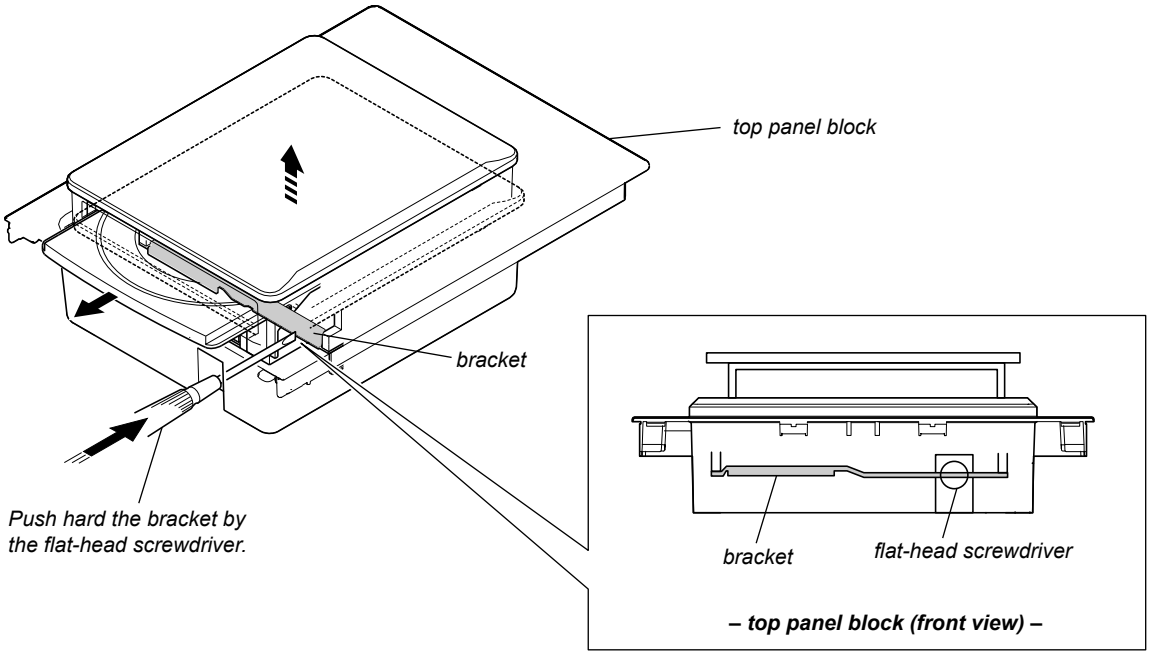

SECTION 2
GENERAL

This section is extracted from instruction manual.

HCD-EC99i
HCD-EC79i (Australian and UK models only)

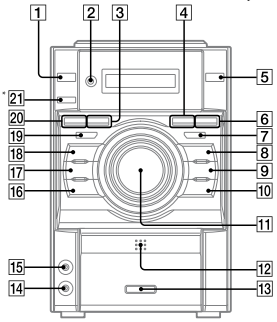

* HCD-EC99i only

HCD-EC79i (North American model only)
HCD-EC69i

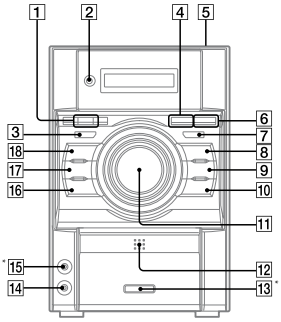

* HCD-EC79i only

Remote

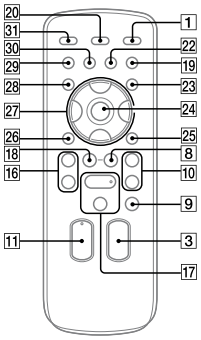

This manual mainly explains operations using the remote, but the same operations can also be performed using the buttons on the unit having the same or similar names.

To use the remote
Slide and remove the battery compartment lid, and insert the two R6 (size AA) batteries (supplied, except for HCD-EC69i), ⊖ side first, matching the polarities shown below.

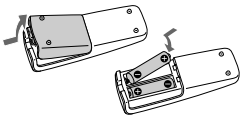

Notes on using the remote
- With normal use, the batteries should last for about six months.
- Do not mix an old battery with a new one or mix different types of batteries.
- If you do not use the remote for a long period of time, remove the batteries to avoid damage from battery leakage and corrosion.
- Batteries installed devices shall not be exposed to excessive heat such as sunshine, fire or the like.

Getting Started

HCD-EC69i only

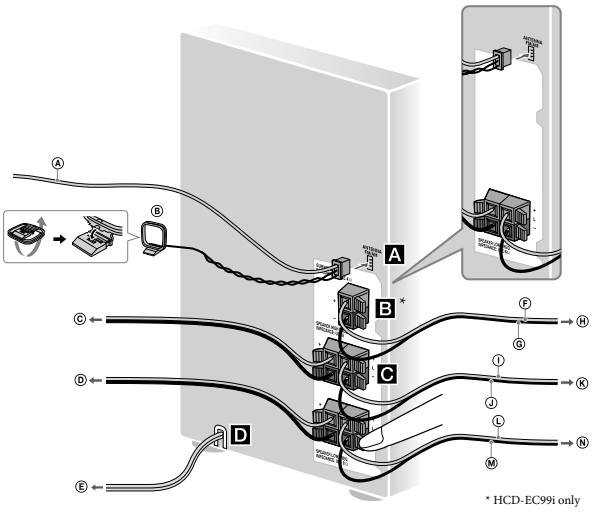

* HCD-EC99i only

Ⓐ FM lead antenna (Extend it horizontally.)
Ⓑ AM loop antenna
Ⓒ To right speaker (High freq.)
Ⓓ To right speaker (Low freq.)
Ⓔ To wall outlet
Ⓕ Solid (Gray/⊕)
Ⓖ Solid (Black/⊖)
Ⓗ To subwoofer
Ⓘ Solid (Blue/⊕)
Ⓙ Solid (Black/⊖)
Ⓚ To left speaker (High freq.)
Ⓛ Solid (Red/⊕)
Ⓜ Solid (Black/⊖)
Ⓝ To left speaker (Low freq.)

A Antennas
Find a location and an orientation that provide good reception, and then set up the antenna.
Keep the antennas away from the speaker cords and the power cord to avoid picking up noise.

B Subwoofer (HCD-EC99i only)
Insert only the stripped portion of the cord.
Place the subwoofer vertically to obtain a better bass reproduction. Also, position the subwoofer:
- on a solid floor where resonance is unlikely to occur.
- at least a few centimeters away from the wall.
- away from the center of the room or place a bookshelf against a wall, to avoid generating a standing wave.

C Speakers
Insert only the stripped portion of the cord.

D Power
Connect the power cord to a wall outlet.
If the plug does not fit the wall outlet, detach the supplied plug adaptor (only for models equipped with an adaptor).

To attach the speaker pads
Attach the supplied speaker pads to the bottom of the front speakers and subwoofer to prevent slipping.

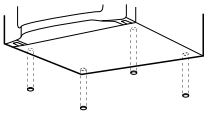

Front speakers:
4 pads for each speaker

Subwoofer:
4 pads (HCD-EC99i only)

To use the iPod
Make sure the iPod indicator 13 lights up (except for HCD-EC69i).
Press PUSH 12 on the unit to flip-open the iPod Dock, slide the LOCK lever to the HOLD position, and insert an iPod Dock Adapter into the Dock before use.
For details on the iPod Dock Adapters, refer to the instructions supplied with the Dock Adapters.

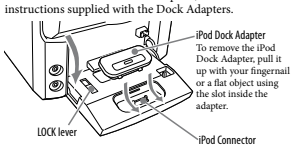

Notes
- The iPod Dock Adapter is not supplied with the system.
- You can use the iPod only when the iPod indicator 13 lights up (except for HCD-EC69i).

To adjust the volume
Press VOLUME +/– (or turn the VOLUME control on the unit) 11.

To connect an optional headphones
Connect headphones to the PHONES jack 14 on the unit.

To set the clock
Use buttons on the remote to set the clock.

1. Press I/⏻ (on/standby) 1 to turn on the system.
2. Press TIMER MENU 23 to select the clock set mode.
   If "PLAY SET" flashes, press ↑/↓ 27 repeatedly to select "CLOCK," and then press ⊙ (enter) 24.
3. Press ↑/↓ 27 repeatedly to set the hour, and then press ⊙ 24.
4. Use the same procedure to set the minutes.

Note
The clock settings are lost when you disconnect the power cord or if a power failure occurs.

To display the clock when the system is off
Press DISPLAY 20. The clock is displayed for about 8 seconds.

Operations

Playing a CD/MP3 disc

1. Select the CD function.
   Press FUNCTION +/– 3 repeatedly (or CD 4 on the unit).
2. Place a disc.

HCD-EC99i
HCD-EC79i (Australian and UK models only)
Press ⏏ (open/close) 5 on the unit, and place a disc with the label side up on the disc tray.
To close the disc tray, press ⏏ 5 on the unit.
Do not force the disc tray closed with your finger, as this may damage the unit.

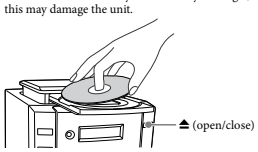

HCD-EC79i (North American model only)
HCD-EC69i
Press ⏏ PUSH OPEN/CLOSE 5 on the unit, and place a disc with the label side up on the CD compartment.
To close the CD compartment, press ⏏ PUSH OPEN/CLOSE 5 on the unit.

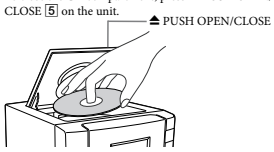

3. Start playback.
   Press ▶ (play) (or ▶II (play/pause) on the unit) 17.

To	Press
Pause playback	II (pause) (or ▶II (play/pause) on the unit) 17. To resume play, press the button again.
Stop playback	■ (stop) 9.
Select a folder on an MP3 disc	🗀 (select folder) + 8/– 18.
Select a track or file	⏮ (go back) 16/⏭ (go forward) 10.
Find a point in a track or file	Hold down ◀◀ (rewind) 16/▶▶ (fast forward) 10 during playback, and release the button at the desired point.
Select Repeat Play	REPEAT 30 repeatedly until "REP" or "REP1" appears.

To change the play mode
Press PLAY MODE 29 repeatedly while the player is stopped. You can select normal play ("🗀" for all MP3 files in the folder on the disc), shuffle play ("SHUF" or "🗀 SHUF*" for folder shuffle), or program play ("PGM").
* When playing a CD-DA (audio) disc, 🗀 (SHUF) Play performs the same operation as normal (SHUF) Play.

Note on the CD compartment (HCD-EC79i (North American model only) and HCD-EC69i)
Do not open the CD compartment when "READING" appears or during playback, as this may cause a malfunction.

Notes on Repeat Play
- All tracks or files on a disc are played repeatedly up to five times.
- "REP1" indicates that a single track or file is repeated until you stop it.

Note on shuffle play mode
When you turn off the system, the selected shuffle play mode ("SHUF" or "🗀 SHUF") is cleared and the play mode returns to normal play mode ("🗀").

Notes on playing MP3 discs
- Do not save other types of tracks or files or unnecessary folders on a disc that has MP3 files.
- Folders that have no MP3 files are skipped.
- MP3 files are played back in the order that they are recorded onto the disc.
- The system can only play MP3 files that have a file extension of ".mp3".
- Even when file name has the ".mp3" file extension, if the actual file differs, playing this file may generate a loud noise which could damage the speaker system and the system may malfunction.
- The maximum number of:
  - folders is 150 (including the root folder).
  - MP3 files is 255.
  - MP3 files and folders that can be contained on a single disc is 300.
  - folder levels (the tree structure of files) is 8.
- Compatibility with all MP3 encoding/writing software, recording device, and recording media cannot be guaranteed. Incompatible MP3 discs may produce noise or interrupted audio or may not play at all.

Notes on playing multisession discs
- If the disc begins with a CD-DA (or MP3) session, it is recognized as a CD-DA (or MP3) disc, and playback continues until another session is encountered.
- A disc with a mixed CD format is recognized as a CD-DA disc.

Listening to the radio

1. Select "TUNER FM" or "TUNER AM."
   Press FUNCTION +/– (or FUNCTION on the unit) 3 repeatedly.
2. Perform tuning.

For automatic scanning
Press TUNING MODE 29 repeatedly until "AUTO" appears, and then press + 10/– 16 (or TUNING + 10/– 16 on the unit). Scanning stops automatically when a station is tuned in, and "TUNED" and "ST" (for stereo programs only) appear.

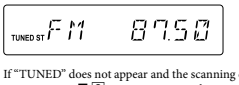

If "TUNED" does not appear and the scanning does not stop, press ■ 9 to stop scanning, then perform manual tuning (below).

For manual tuning
Press TUNING MODE 29 repeatedly until "MANUAL" appears, and then press + 10/– 16 (or TUNING + 10/– 16 on the unit) repeatedly to tune in the desired station.

Tip
To reduce static noise on a weak FM stereo station, press FM MODE 30 repeatedly until "MONO" appears to turn off stereo reception.

Presetting radio stations
Use buttons on the remote to preset stations.

1. Tune in the desired station.
2. Press TUNER MEMORY 28 to select the tuner memory mode.

3. Press + 10/– 16 repeatedly to select the desired preset number.
   If another station is already assigned to the selected preset number, the station is replaced by the new stations.
4. Press ⊙ 24 to store the station.
5. Repeat steps 1 through 4 to store other stations.
   You can preset up to 20 FM and 10 AM stations. The preset stations are retained for about half a day even if you disconnect the power cord or if a power failure occurs.
6. To call up a preset radio station, press TUNING MODE 29 repeatedly until "PRESET" appears, and then press + 10/– 16 repeatedly to select the desired preset number.

Playing the iPod

1 Select the iPod function.
Press FUNCTION +/– 3 repeatedly (or iPod 6 on the unit).

2 Place the iPod.

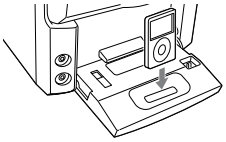

3 Start playback.
Press ► (or ►II on the unit) 17.

To control the iPod
You can control your iPod with the following buttons on the remote or unit.

To	Press
Pause playback	II (pause) (or ►II (play/pause) on the unit) 17 or ■ (stop) 9.
Scroll up/down the iPod menus	↑/↓ 27. You can scroll up or down the iPod menus much like the Click Wheel operations of the iPod or the drag up-or-down operations of the iPod touch.
Select a track or chapter of audiobook/podcast	I◄◄ (go back) 16/►►I (go forward) 10. To fast-forward or fast-rewind, hold down the button.
Choose the selected item	→ 27/⊙ (enter) 24. You can choose the selected item much like the center button on the iPod or the touch operation of the iPod touch.
Find a point in a track or chapter of audiobook/podcast	Hold down ◄◄ (rewind) 16/►► (fast forward) 10 during playback, and release the button at the desired point.
Return to the previous menu or select a menu	← 27/TOOL MENU 25/↶ (return) 26. You can return to the previous menu or select a menu much like the Menu button on the iPod or the touch operation of the iPod touch.

To use the system as a battery charger
You can use the system as a battery charger for the iPod when the system is on.
The charging begins when the iPod is placed on the iPod connector. The charging status appears in the iPod display. For details, see the user's guide of your iPod.

To stop charging the iPod
Remove the iPod.

Notes
- When placing or removing the iPod, handle the iPod in the same angle as that of the iPod connector on the unit and do not twist or sway the iPod to prevent connector damage.
- Do not carry the unit with an iPod set on the connector. Doing so may cause a malfunction.
- When placing or removing the iPod, brace the unit with one hand and take care not to press the controls of the iPod by mistake.
- Before disconnecting the iPod, pause playback.
- While playing video, you cannot use ◄◄ 16/►► 10. You can fast rewind (fast forward) by holding down I◄◄ 16/►►I 10.
- To change the volume level, use VOLUME +/– (or VOLUME control on the unit) 11. The volume level does not change even if adjusted on the iPod.
- This system is designed for iPod only. You cannot connect any other portable audio players.
- To use an iPod, refer to the user's guide of your iPod.
- Sony cannot accept responsibility in the event that data recorded to iPod is lost or damaged when using an iPod with this unit.

Creating your own program (Program Play)

Use buttons on the remote to create your own program.

1 Select the CD function.
Press FUNCTION +/– 3 repeatedly.

2 Select the play mode.
Press PLAY MODE 29 repeatedly until "PGM" appears while the player is stopped.

3 Select the desired track or file number.
Press I◄◄ 16/►►I 10 repeatedly until the desired track or file number appears.
When programming MP3 files, press 🗀 + 8/– 18 repeatedly to select the desired folder, and then select the desired file.

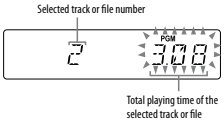

4 Program the selected track or file.
Press ⊙ 24 to enter the selected track or file.

5 Repeat steps 3 through 4 to program additional tracks or files, up to a total of 25 tracks or files.

6 To play your program of tracks or files, press ► 17.
The program remains available until you open the disc tray or CD compartment (HCD-EC69i only). To play the same program again, select the CD function, and then press ► 17.

To cancel Program Play
Press PLAY MODE 29 repeatedly until "PGM" disappears while the player is stopped.

To delete the last track or file of the program
Press CLEAR 22 while the player is stopped.

To view program information, such as total track number of the program
Press DISPLAY 20 repeatedly.

Using optional audio components (except for HCD-EC69i)

1 Prepare the sound source.
Connect additional audio component to the PC IN jack 15 on the unit using an audio analog cord (not supplied).

2 Turn down the volume.
Press VOLUME – (or turn the VOLUME control on the unit) 11.

3 Select the PC function.
Press FUNCTION +/– (or FUNCTION on the unit) 3 repeatedly.

4 Start playback.
Start playback of the connected component.

5 Adjust the volume.
Press VOLUME +/– (or turn the VOLUME control on the unit) 11.

Adjusting the sound

To	Press
Generate a more dynamic sound (Dynamic Sound Generator X-tra)	DSGX 7 on the unit.
Set the sound effect	EQ 19.

To turn on the subwoofer (HCD-EC99i only)
Press SUBWOOFER ON/OFF 21 on the unit until "SUBWOOFER" appears. The volume of the subwoofer is linked to the front speakers.

Changing the display

To	Press
Change information on the display*	DISPLAY 20 repeatedly when the system is turned on.
Change Display mode (See below.)	DISPLAY 20 repeatedly when the system is turned off.

* For example, you can view CD/MP3 disc information, such as;
– track or file number during normal play.
– track or file name ("♫") during normal play.
– artist name ("👤") during normal play.
– album or folder name ("🗀") during normal play.
– total playing time while the player is stopped.

The system offers the following display modes.

Display mode	When the system is off,
Power Saving Mode[1)]	The display is turned off to conserve power. The timer and clock continue to operate.
Clock[2)]	The clock is displayed.

[1)] You cannot set the clock in Power Saving Mode.
[2)] The clock display automatically turns to Power Saving Mode after 8 seconds.

Notes on the display information
- Characters that cannot be displayed appear as "_".
- The following are not displayed;
  – total playing time for an MP3 disc.
  – remaining playing time for an MP3 file.
- The following are not displayed correctly;
  – elapsed playing time of an MP3 file encoded using VBR (variable bit rate).
  – folder and file names that do not follow either the ISO9660 Level 1, Level 2 or Joliet in the expansion format.
- The following are displayed;
  – total playing time for a CD-DA disc during normal play.
  – remaining playing time for a track.
  – ID3 tag information for MP3 files when ID3 version 1 and version 2 tags are used (ID3 version 2 tag information display has priority when both ID3 version 1 and version 2 tags are used for a single MP3 file).
  – up to 15 characters of ID3 tag information using uppercase letters (A to Z), numbers (0 to 9), and symbols (" $ % ' ( ) * , – . / < = > @ [\ ] _ ` { | } ! ? ^).

Using the timers

The system offers two timer functions. If you use both timers, the Sleep Timer has priority.
Use buttons on the remote to use the timer functions.

Sleep Timer:
You can fall asleep to music. This function works even if the clock is not set.
Press SLEEP 31 repeatedly. If you select "AUTO," the system automatically turns off after the current disc stops or in 100 minutes.

Play Timer:
You can wake up to CD, tuner or iPod at a preset time.
Make sure you have set the clock.

1 Prepare the sound source.
Prepare the sound source, and then press VOLUME +/– 11 to adjust the volume.
To start from a specific CD track or audio file, create your own program.

2 Select the timer set mode.
Press TIMER MENU 23.

3 Set the play timer.
Press ↑/↓ 27 repeatedly to select "PLAY SET," and then press ⊙ 24.
"ON TIME" appears, and the hour indication flashes.

4 Set the time to start playback.
Press ↑/↓ 27 repeatedly to set the hour, and then press ⊙ 24. The minute indication flashes. Use the procedure above to set the minutes.
"OFF TIME" appears and the hour indication flashes in the display.

5 Use the same procedure as in step 4 to set the time to stop playback.

6 Select the sound source.
Press ↑/↓ 27 repeatedly until the desired sound source appears, and then press ⊙ 24. The display shows the timer settings.

7 Turn off the system.
Press I/⏻ 1.
The system turns on 15 seconds before the preset time. If the system is on at the preset time, the Play Timer will not play.
Do not operate the system from the time the system turns on until the play starts.

To check the setting
1 Press TIMER MENU 23.
"SELECT" flashes in the display.

2 Press ⊙ 24.

3 Press ↑/↓ 27 repeatedly to select "PLAY SEL," and then press ⊙ 24.

To cancel the timer
Repeat the same procedure as above until "OFF" appears in step 3, and then press ⊙ 24.

To change the setting
Start over from step 1.

Notes for the iPod user
- Make sure the iPod is not playing when using the Play Timer.
- The Play Timer may not be activated depending on the status of the connected iPod.

Tip
The Play Timer setting remains as long as the setting is not cancelled manually.

SECTION 3
DISASSEMBLY

- This set can be disassembled in the order shown below.

3-1. DISASSEMBLY FLOW

- **HCD-EC69i/EC79i: US, Canadian**

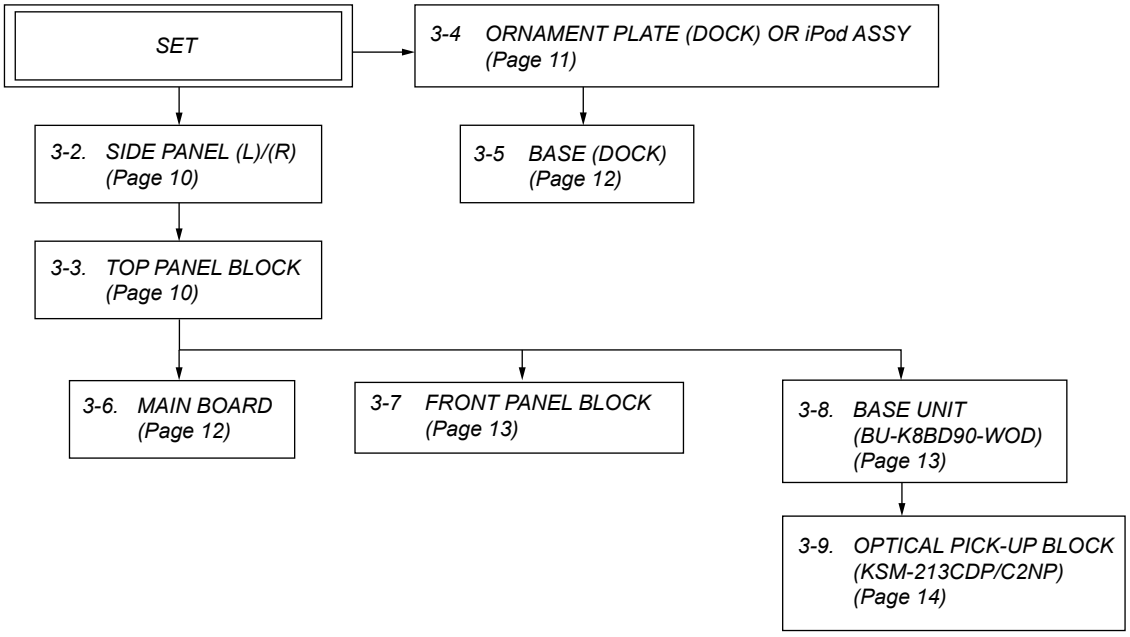

- **HCD-EC79i: UK, Australian/EC99i**

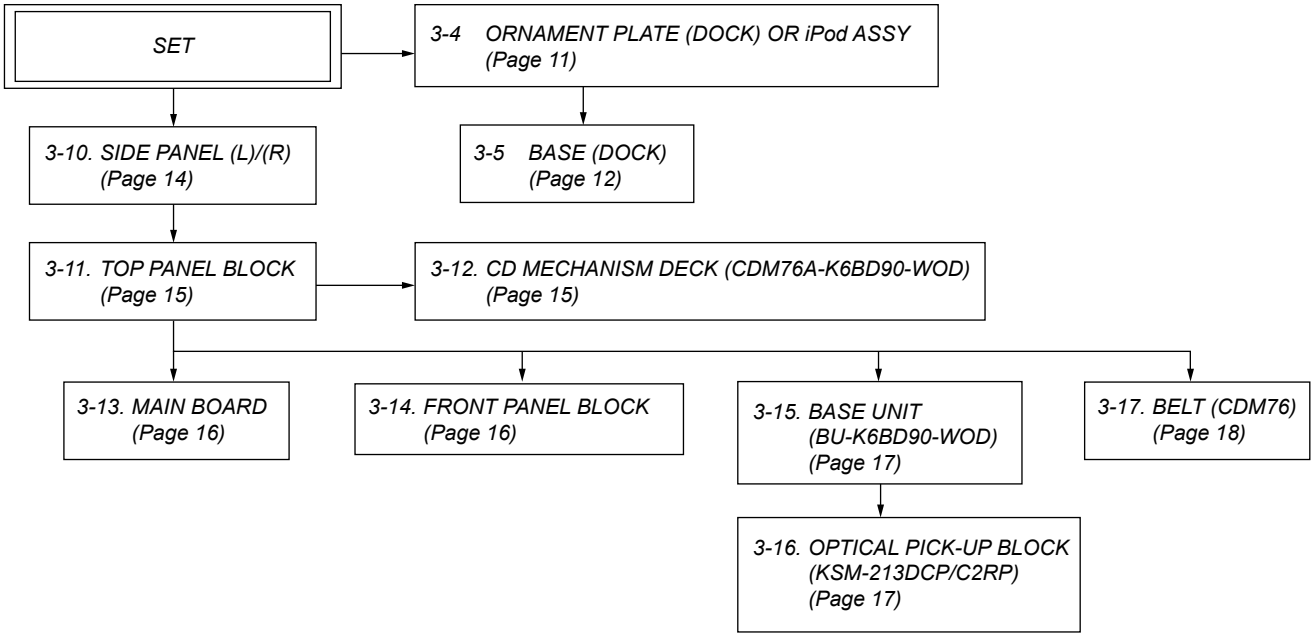

Note: Follow the disassembly procedure in the numerical order given.

3-2. SIDE PANEL (L)/(R) (HCD-EC69i/EC79i: US, Canadian)

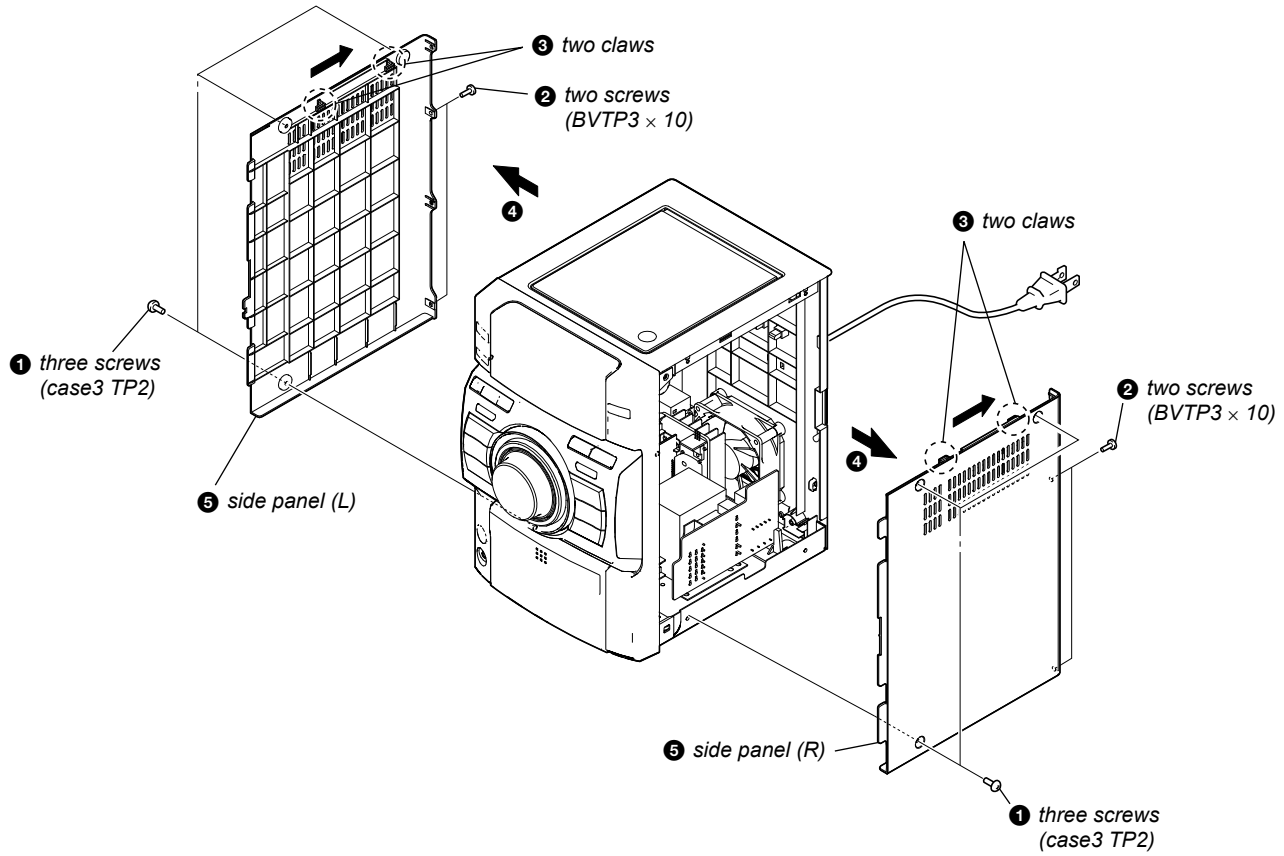

3-3. TOP PANEL BLOCK (HCD-EC69i/EC79i: US, Canadian)

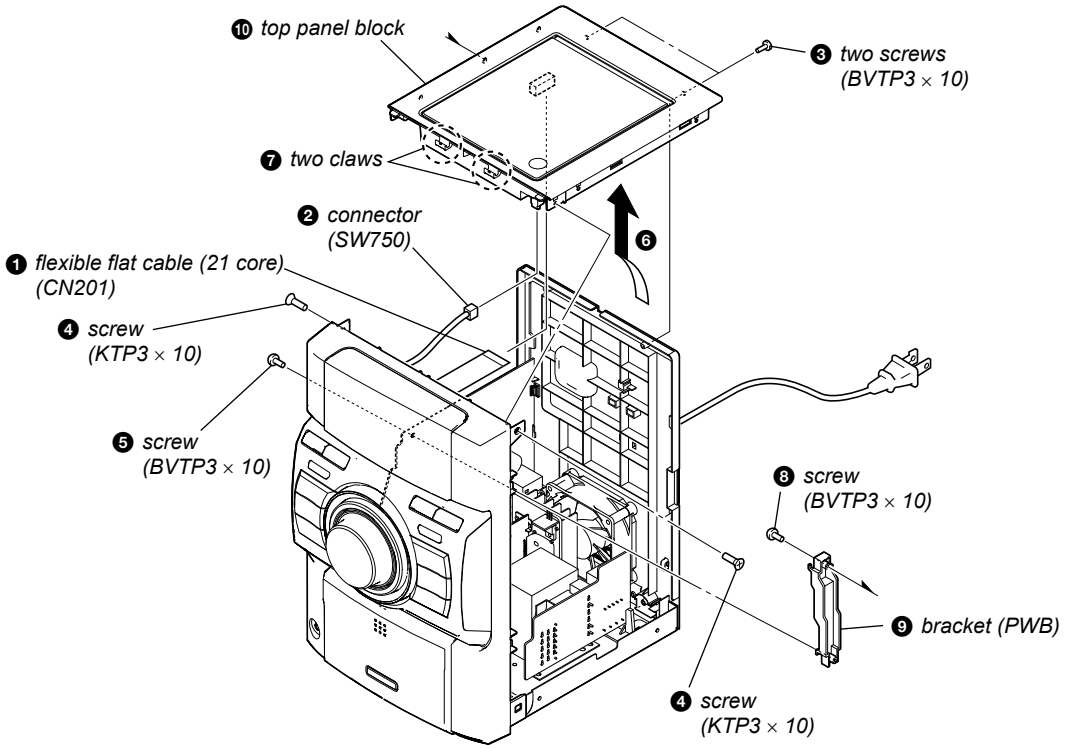

3-4. ORNAMENT PLATE (DOCK) OR iPod ASSY

Note: *This illustration sees the front panel from bottom side.*

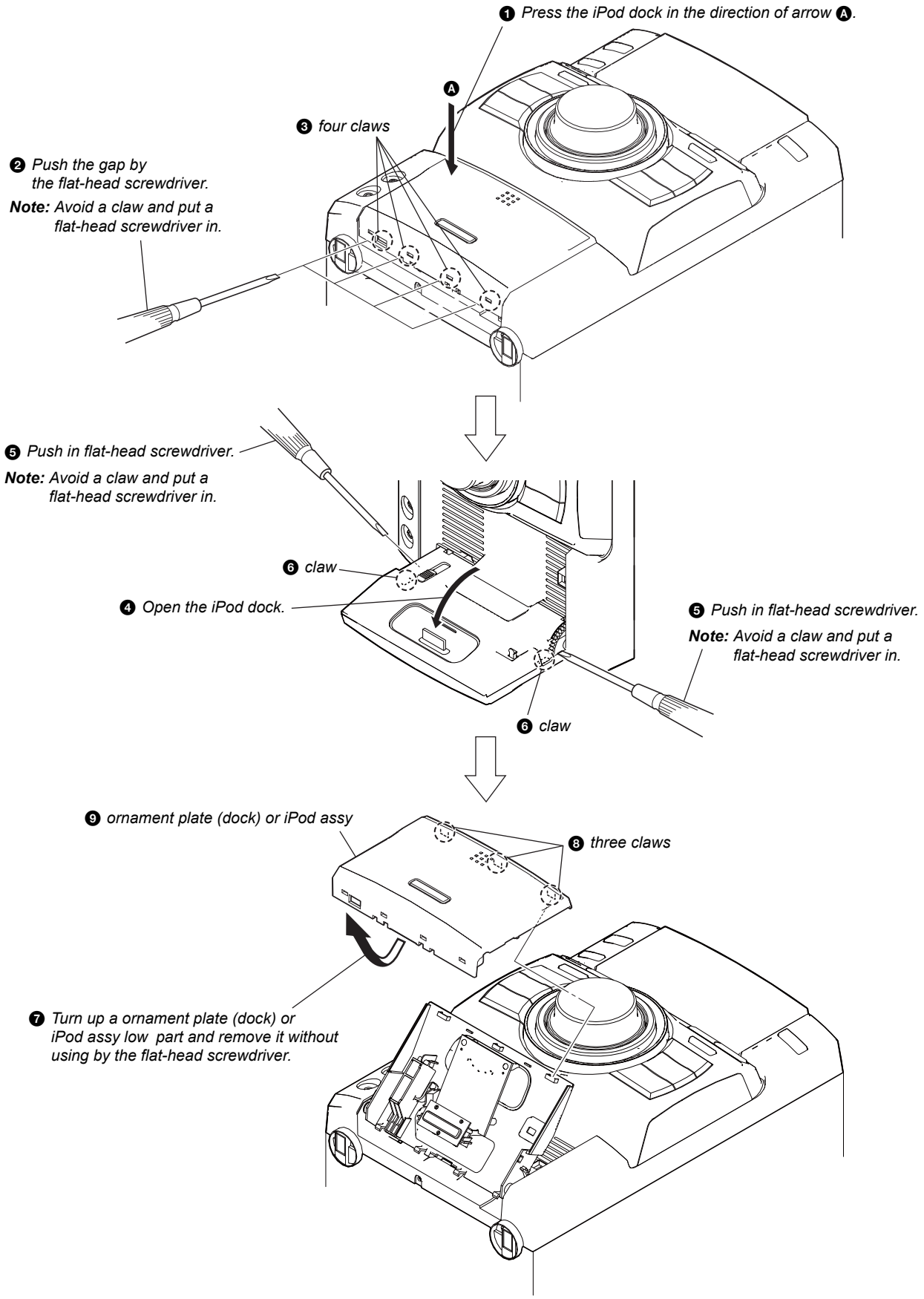

3-5. BASE (DOCK)

Note: *This illustration sees the front panel from bottom side.*

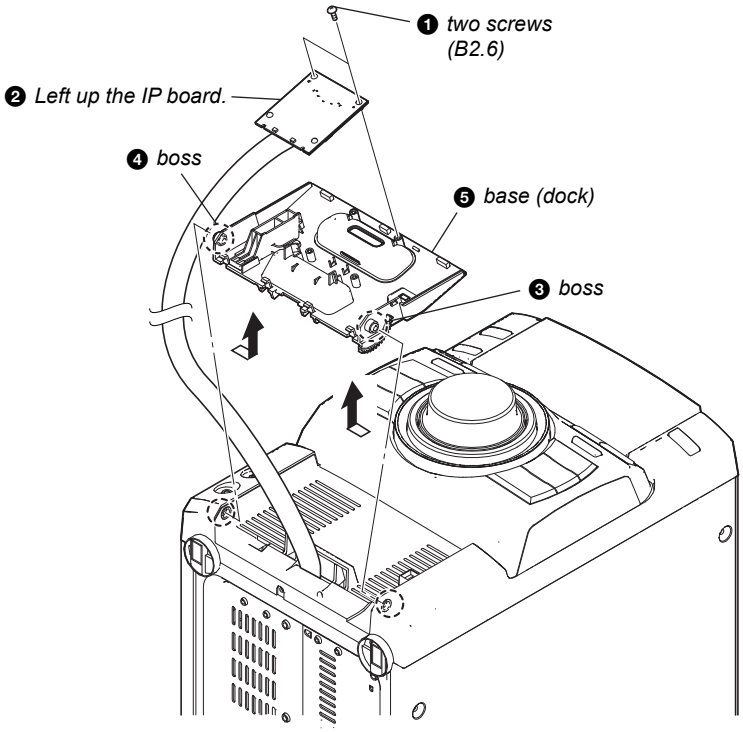

3-6. MAIN BOARD
(HCD-EC69i/EC79i: US, Canadian)

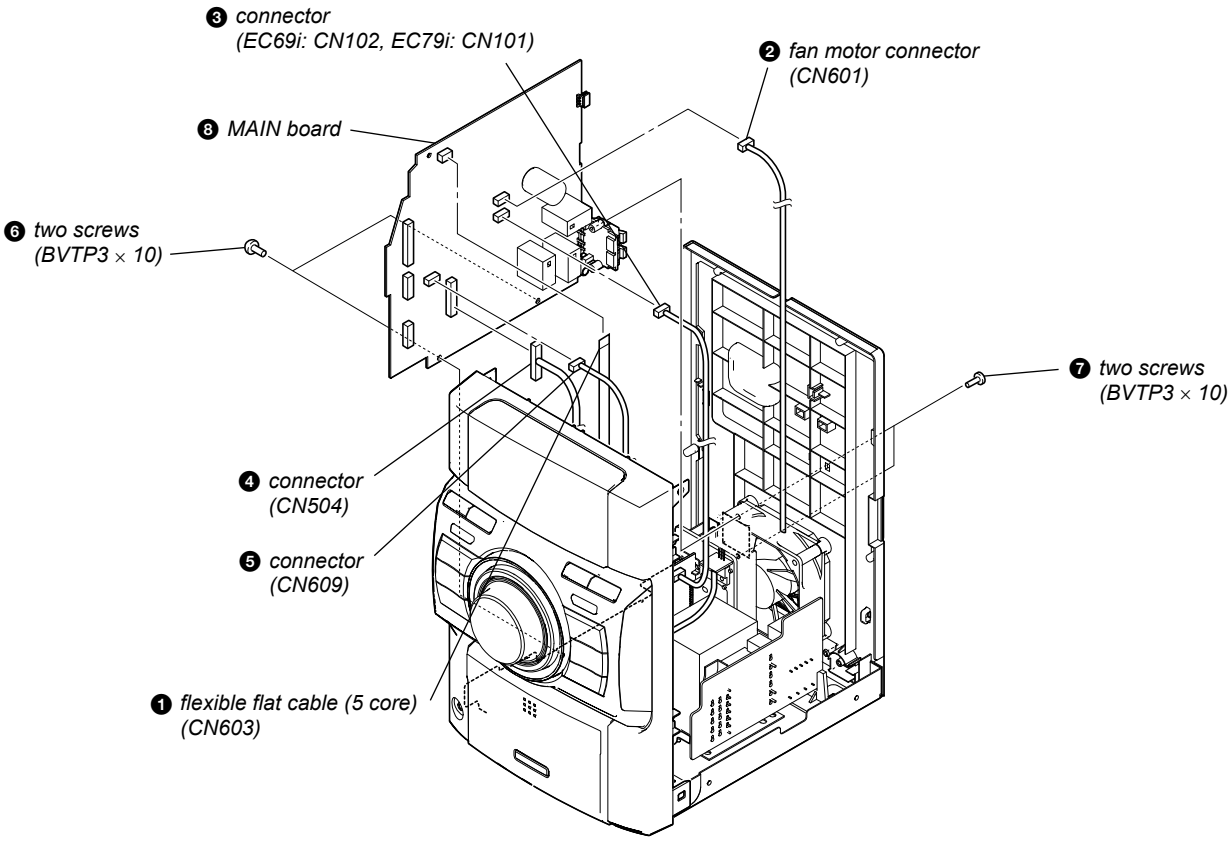

3-7. FRONT PANEL BLOCK (HCD-EC69i/EC79i: US, Canadian)

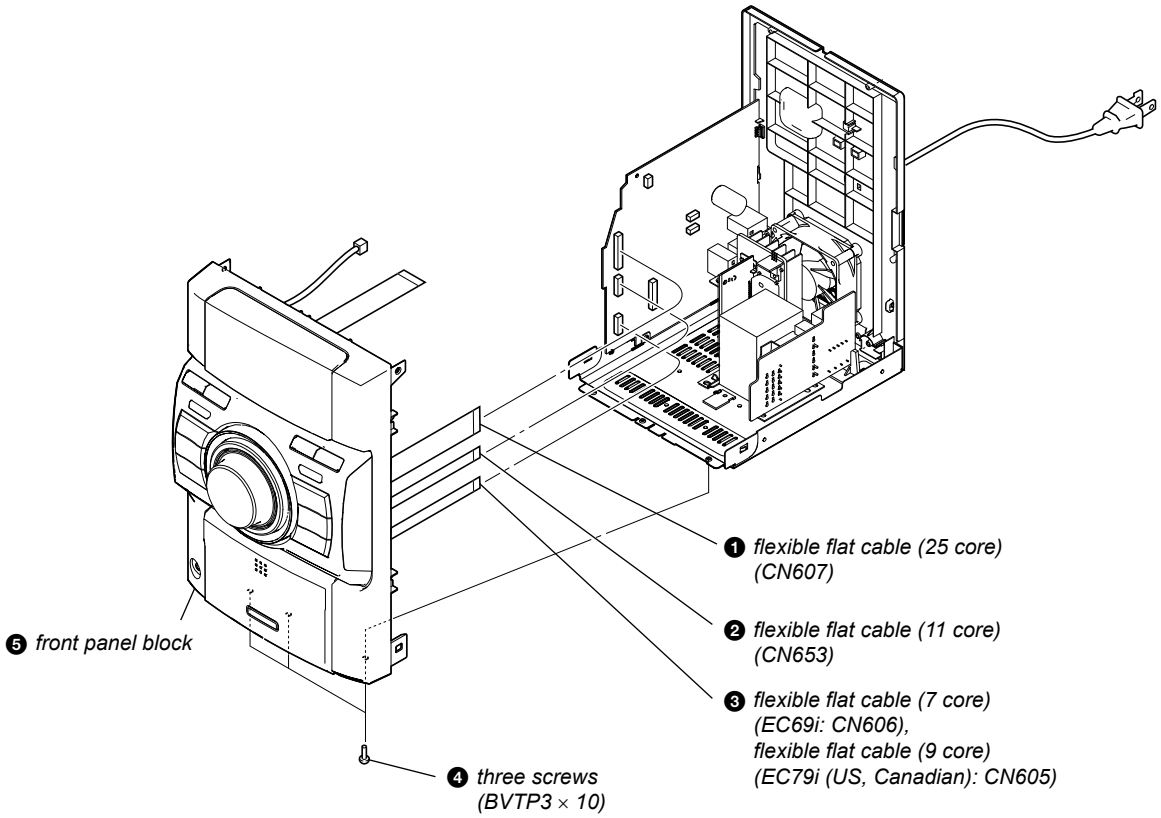

3-8. BASE UNIT BLOCK (BU-K8BD90-WOD) (HCD-EC69i/EC79i: US, Canadian)

Note: *This illustration sees the base unit from CD board side.*

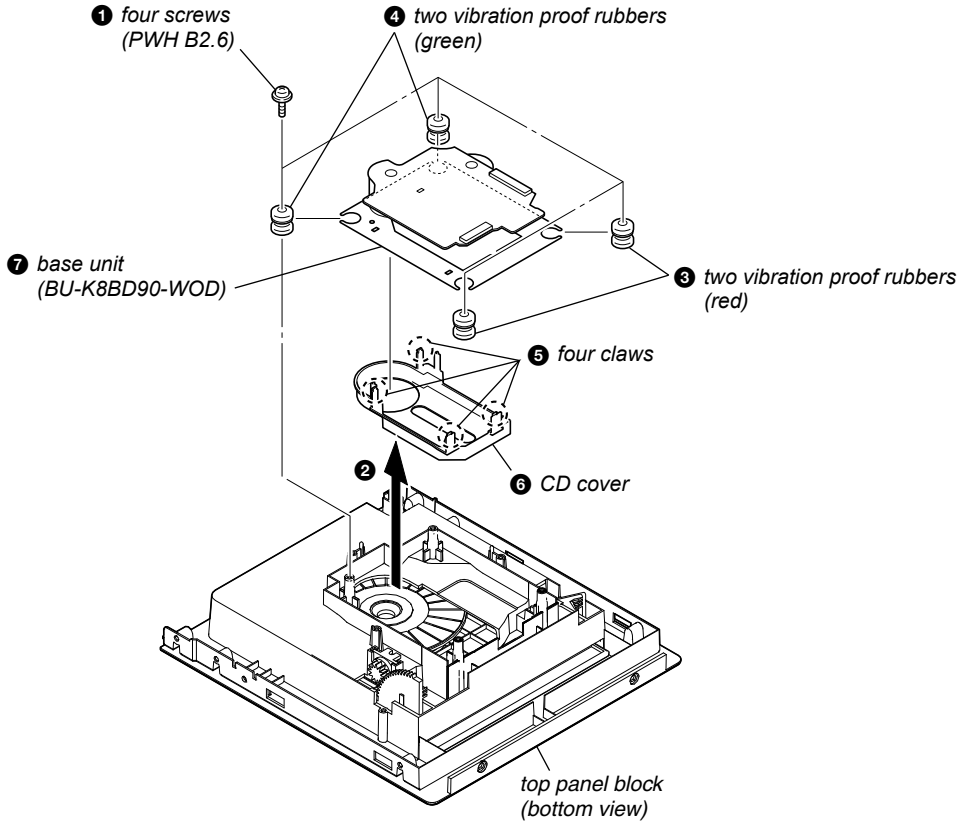

3-9. OPTICAL PICK-UP BLOCK (KSM-213CDP) (HCD-EC69i/EC79i: US, Canadian)

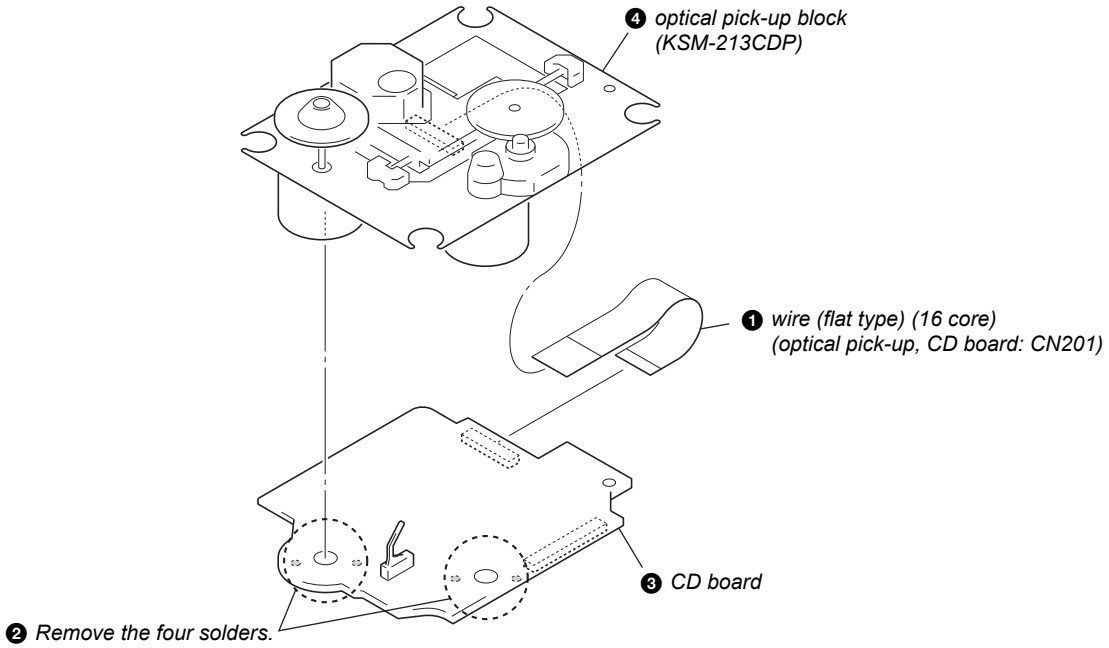

3-10. SIDE PANEL (L)/(R) (HCD-EC79i: UK, Australian/EC99i)

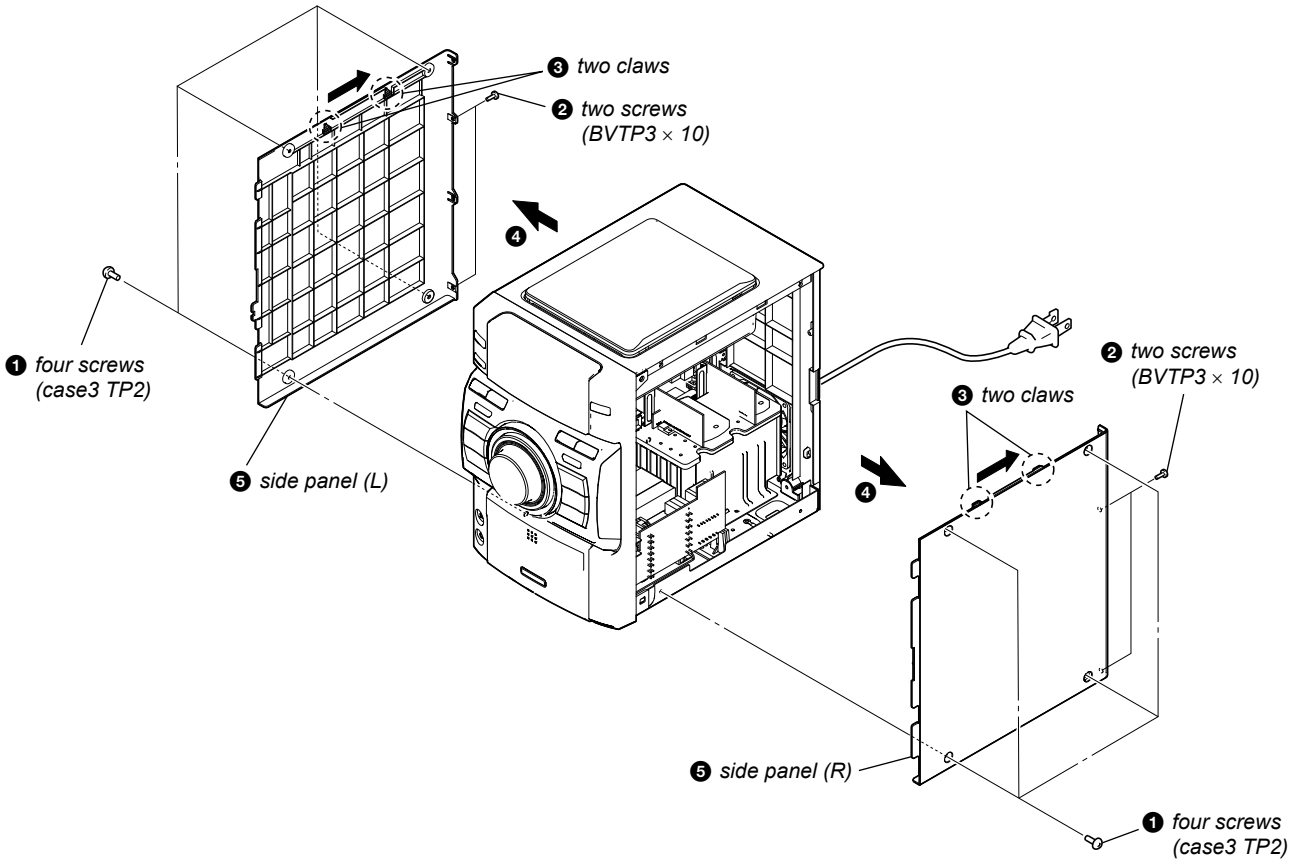

3-11. TOP PANEL BLOCK (HCD-EC79i: UK, Australian/EC99i)

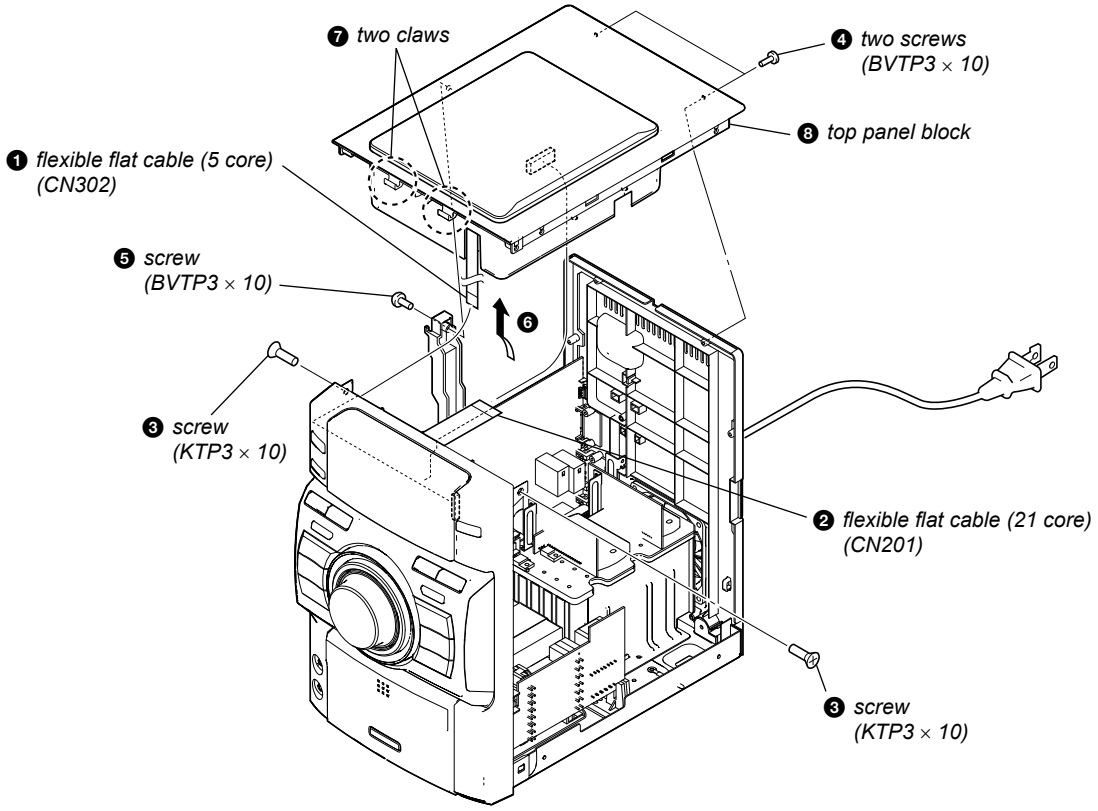

3-12. CD MECHANISM DECK (CDM76A-K6BD90-WOD) (HCD-EC79i: UK, Australian/EC99i)

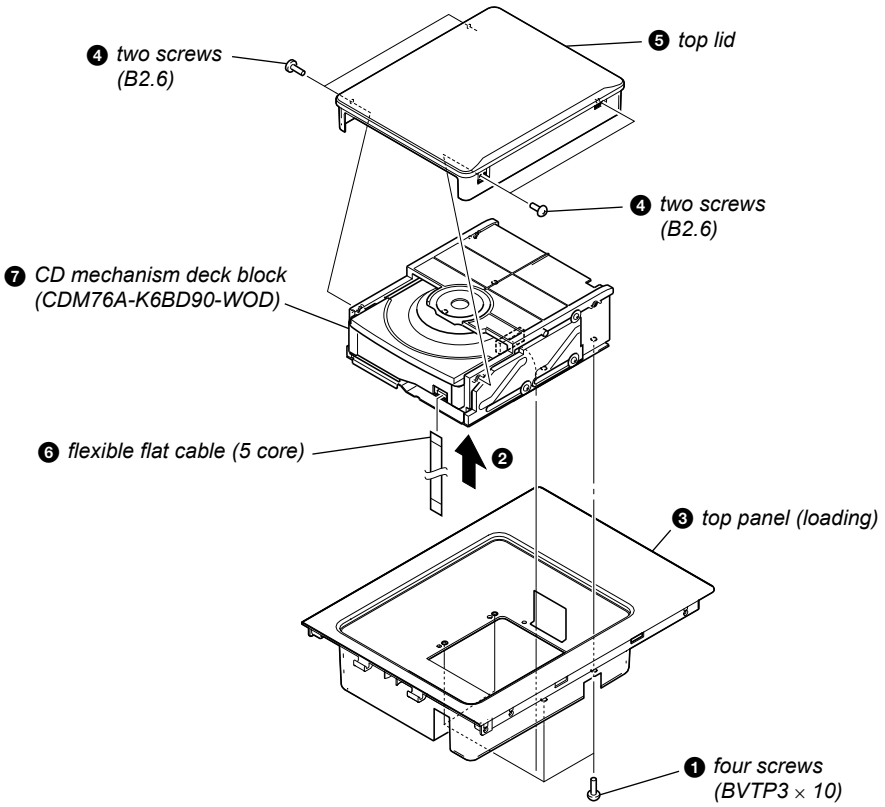

3-13. MAIN BOARD
(HCD-EC79i: UK, Australian/EC99i)

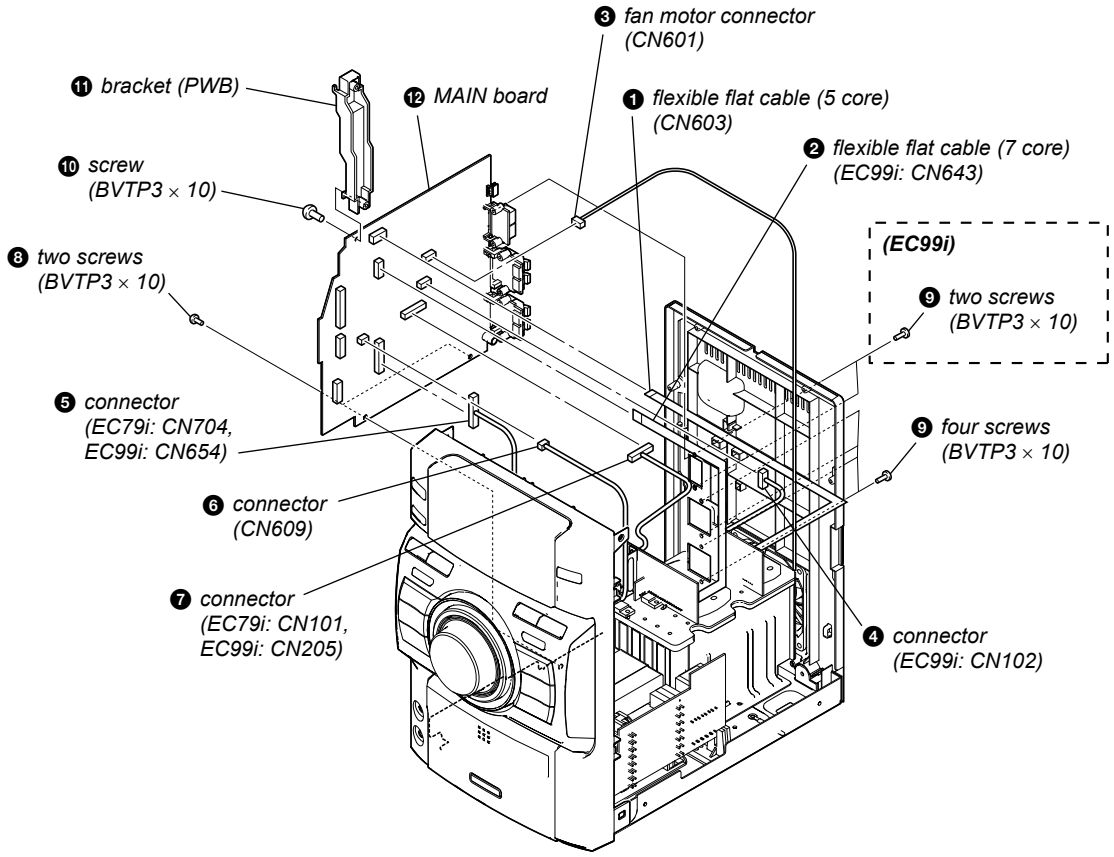

3-14. FRONT PANEL BLOCK
(HCD-EC79i: UK, Australian/EC99i)

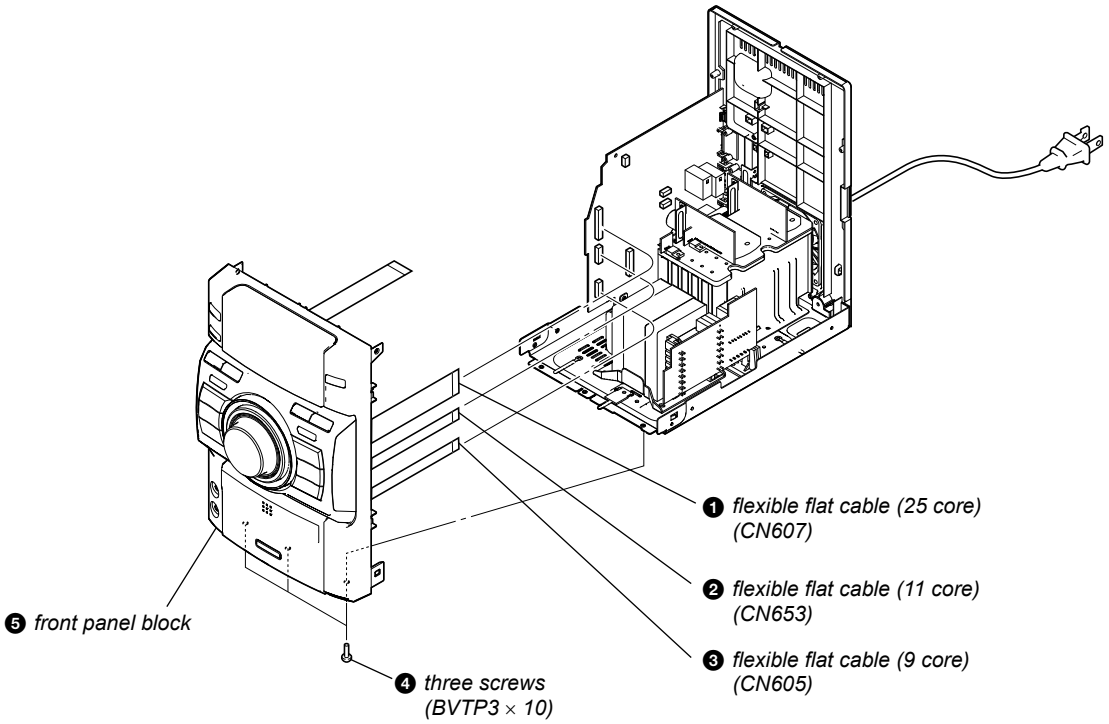

3-15. BASE UNIT (BU-K6BD90-WOD) (HCD-EC79i: UK, Australian/EC99i)

Note: *This illustration sees the base unit from CD board side.*

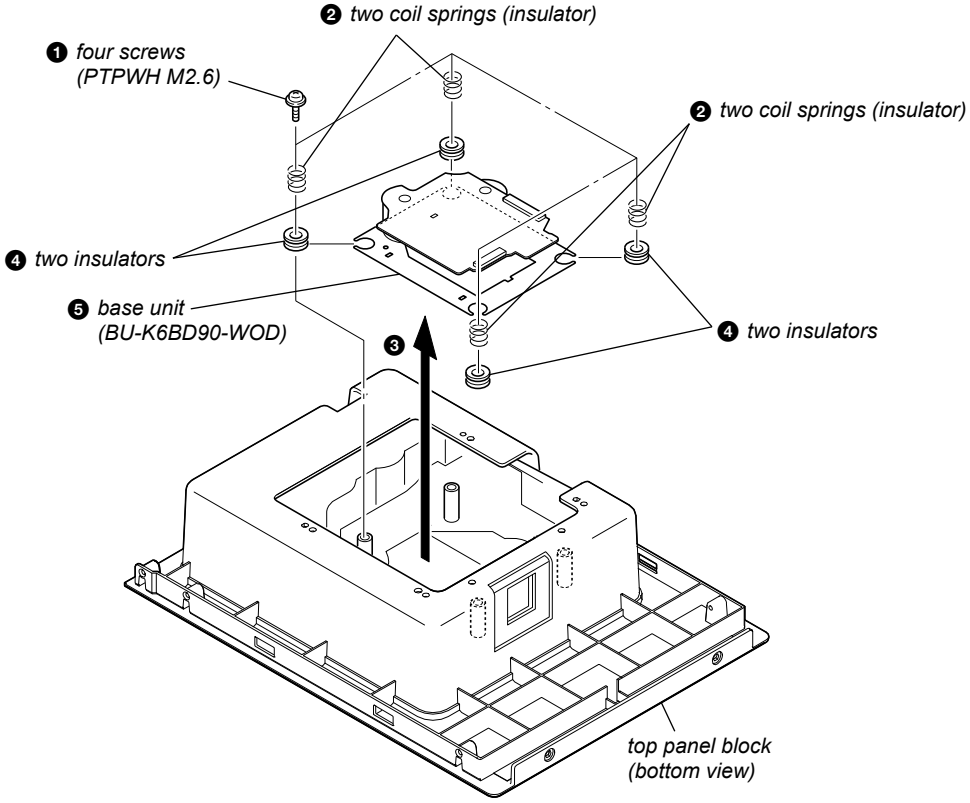

3-16. OPTICAL PICK-UP BLOCK (KSM-213DCP) (HCD-EC79i: UK, Australian/EC99i)

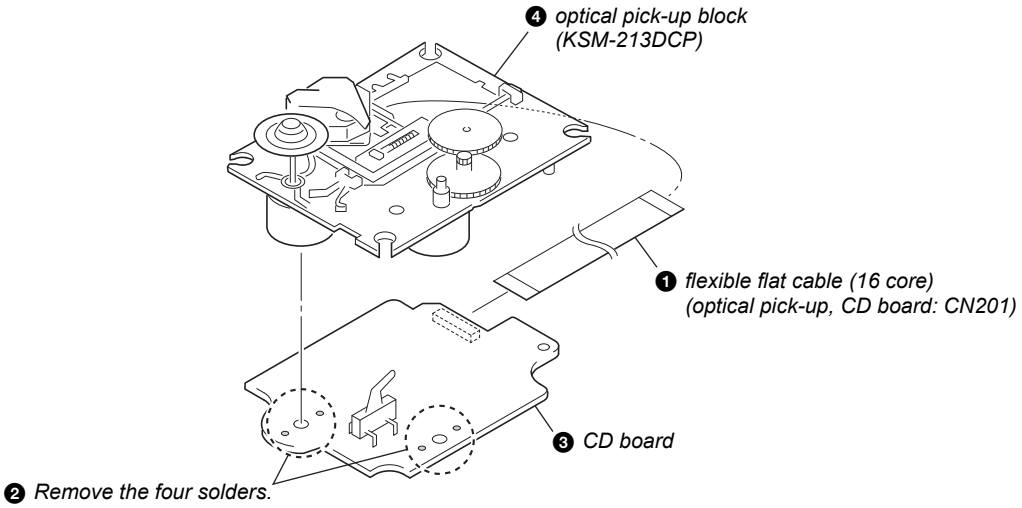

3-17. BELT (CDM76)
(HCD-EC79i: UK, Australian/EC99i)

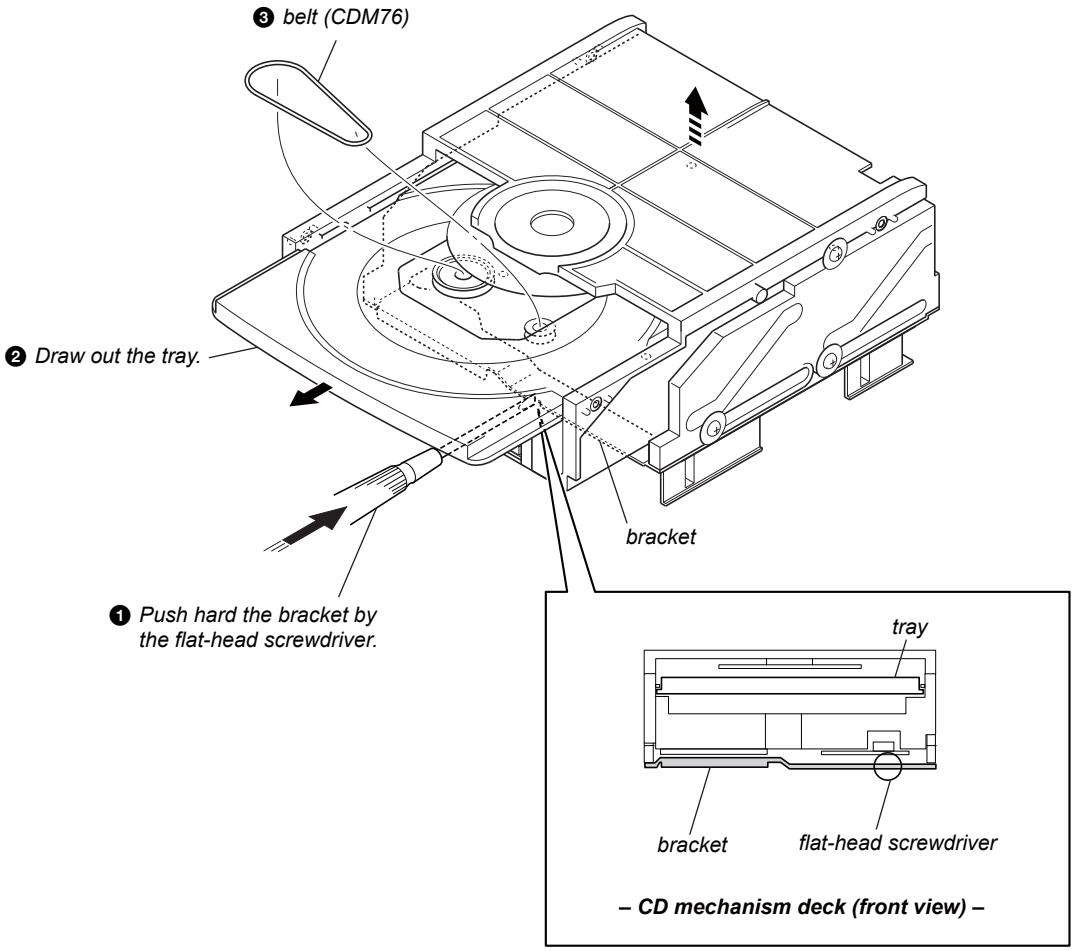

SECTION 4
TEST MODE

COLD RESET

The cold reset clears all data including preset data stored in the memory to initial conditions. Execute this mode when returning the set to the customer.

Procedure:

1. In the standby status, press the [I/⏻] button to turn the power on.
2. Press three buttons of [■], [CD] and [I/⏻] simultaneously.
3. When "RESET" appears, the set enters standby status.

PANEL TEST MODE

Enter The Panel Test Mode

Procedure:

1. In the standby status, press the [I/⏻] button to turn the power on.
2. Press three buttons of [■], [iPod] and [I/⏻] simultaneously (EC69i/EC79i: US, Canadian models).
   Press three buttons of [DISPLAY], [■] and [iPod] simultaneously (EC79i: UK, Australian/EC99i).
3. When the panel test mode is activated, LEDs and segments of the liquid crystal display are all turned on.

Version Check

Procedure:

1. In the panel test mode (all LEDs and segments of the liquid crystal display are turned on), press the [FUNCTION] button.
2. On the liquid crystal display, date and version are displayed "xxxxxxxx".
3. From this status, press the [▶II] button, and the destination and model name are displayed.
4. To release from this mode, press three button of [■], [iPod] and [I/⏻] simultaneously (EC69i/EC79i: US, Canadian models).
   To release from this mode, press three buttons of [DISPLAY], [■] and [iPod] simultaneously (EC79i: UK, Australian/EC99i).

Key Test Mode

Procedure:

1. In the panel test mode (all LEDs and segments of the liquid crystal display are turned on), press the [■] button.
2. The message "KEY0 0 0"displayed. Whenever any buttons are pressed and the [VOLUME] dial is turned, the value is changed.
3. To release from this mode, press three button of [■], [iPod] and [I/⏻] simultaneously (EC69i/EC79i: US, Canadian models).
   To release from this mode, press three buttons of [DISPLAY], [■] and [iPod] simultaneously (EC79i: UK, Australian/EC99i).

CD REPEAT 5 LIMIT CANCEL MODE

Number of repeats for CD playback is 5 times when the repeat mode is "REPEAT". This mode enables CD to repeat playback for limitless times.

Procedure:

1. Press the [I/⏻] button to turn the power on.
2. Press the [FUNCTION] button to select CD function.
3. Press three buttons of [■], [TUNING + ▶▶ ▷▷I] and [I/⏻] simultaneously (EC69i/EC79i: US, Canadian models).
   Press three buttons of [DISPLAY], [■] and [TUNING + ▶▶ ▷▷I] simultaneously (EC79i: UK, Australian/EC99i).
4. It enters the CD repeat 5 limit cancel mode and displays "NO LIMIT".
5. To release this mode, press the [I/⏻] button to turn the power off.

CD TRAY LOCK (EC79i: UK, Australian/EC99i)

This mode is for the antitheft of CD disc in shop. (not for transport)

Procedure:

1. Press the [I/⏻] button to turn the power on.
2. Press the [FUNCTION] button to select CD function.
3. Insert a disc.
4. While pressing the [■] button, press the [⏏] button for more 5 seconds.
5. The message "LOCKED" is displayed and the disc tray is locked. (Even if exiting from this mode, the disc tray is still locked)
6. If press the [⏏] button to eject the disc, the message "LOCKED" is displayed and can not eject the disc.
7. To release this lock, while pressing the [■] button, press the [⏏] button for 5 seconds again.
8. The message "UNLOCKED" is displayed and the disc tray is unlocked.

CD POWER MANAGE

This mode is for switch the CD power supply on/off. Even if this state pulls out AC plug, it is held.

Procedure:

1. Press the [I/⏻] button to turn the power on.
2. Press the [FUNCTION] button to select CD function.
3. Press the [I/⏻] button again to turn the power off (standby).
4. After pressing the [DISPLAY] button on the remote commander, while pressing the [■] button, press the [I/⏻] button.
5. It turns power on and display "CD POWER", then display "ON" or "OFF".

CHANGE-OVER THE AM TUNING INTERVAL (EC69i: US, Canadian, Australian/EC79i: US, Canadian, Australian/EC99i: US, Canadian and Australian models)

The AM tuning interval can be changed over 9 kHz or 10 kHz.

Procedure:

1. Press the [I/⏻] button to turn the power on.
2. Press the [FUNCTION] button to select TUNER (AM) function.
3. Press the [I/⏻] button again to turn the power off (standby).
4. After pressing the [DISPLAY] button on the remote commander, while pressing the [TUNING + ▶▶ ▷▷I] button, press the [I/⏻] button.
5. It turns power on and display "9k STEP" or "10k STEP", and thus the tuning interval is changed over.

CD SERVO TEST MODE

This mode can check the servo system operations of the optical pick-up system (= optical unit + CD board).

Note 1: Do not enter the this mode while any other test mode is in progress.

Note 2: Do not enter any other test mode while the this mode is in progress.

How to Enter the CD Servo Test Mode

Procedure:

1. Press the [I/⏻] button to turn the power on.
2. Press the [FUNCTION] button to select CD function.
3. Press three buttons of [▶II], [TUNING + ▶▶ ▷▷I] and [I/⏻] simultaneously.
4. It enters the CD servo test mode and displays "BDT S CU".

How to Exit from the CD Servo Test Mode

Procedure:

1. Press three buttons of [▶II], [TUNING + ▶▶ ▷▷I] and [I/⏻] simultaneously.
2. It releases from the CD Servo Test Mode and returns to the ordinary CD function.

Key Operation:

[🗀 +], [🗀 –]:

Use these keys to move between the five modes contained in the CD Servo Test Mode, that are the S-Curve Mode, the RAM Read Mode, the RAM Write Mode, the Command Out Mode and the Error Rate Mode as described below. Also, use these keys to move between the menus within the respective five modes. When [🗀 +] is pressed, the screen advances to the next menu or to the next mode. When [🗀 –] is pressed, the screen returns back to the previous menu or to the previous mode. Use these keys also to increase or decrease the numeric value when changing the numeric value. Pressing [🗀 +] increases the value and pressing [🗀 –] decreases the value.

[DSGX], [iPod]:

Use these keys to move between the different layers of the hierarchy of the CD Servo Test Mode shown below. Press [DSGX] to move down to the lower layer, and press [iPod] to move up to the higher layer.

[TUNING + ▶▶ ▷▷I], [– TUNING I◁◁ ◀◀]:

Use these keys to move the cursor to the right digit or to the left digit in the six-digit number, when changing the numeric value.
Press [TUNING + ▶▶ ▷▷I] to move the cursor to the right, and press [– TUNING I◁◁ ◀◀] to return the cursor to the left.

[FUNCTION]:

Use this key to execute Command Out in the Command Out Mode.

CD Servo Test Mode Tree:

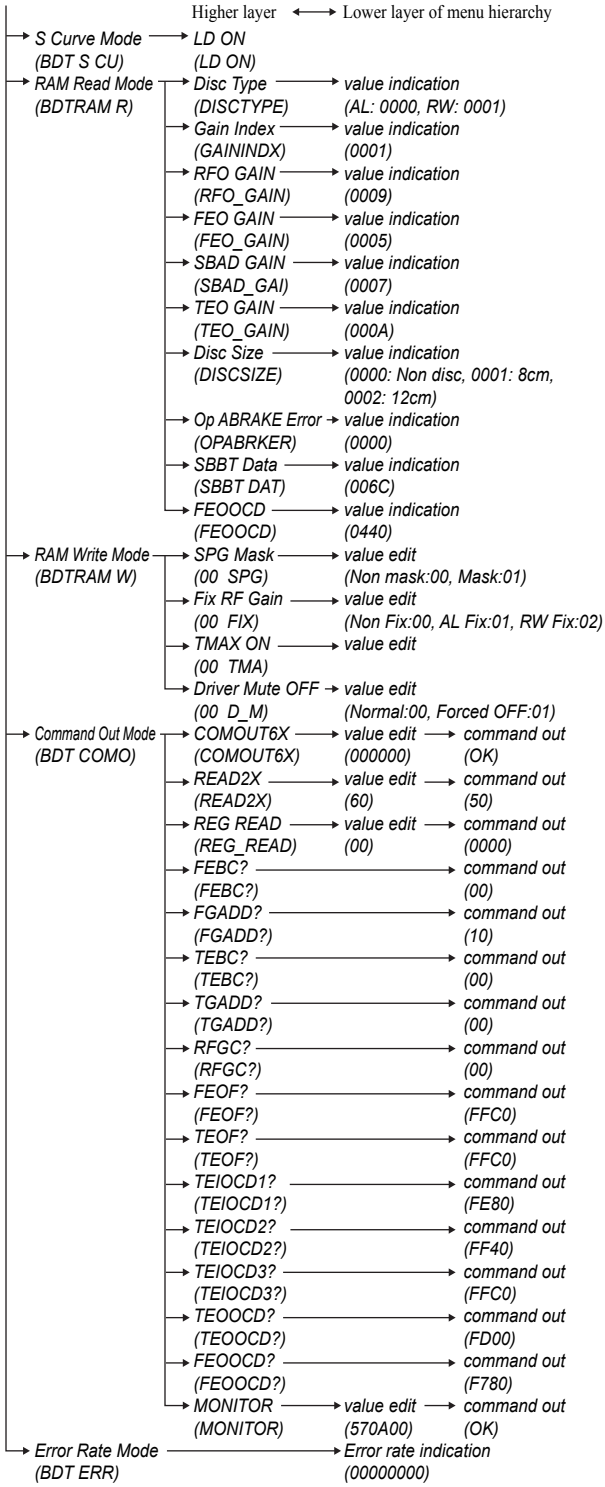

CD SERVICE MODE

This mode can move the SLED of the optical pick-up, and also can turn the optical pick-up laser power on and off.

Procedure:

1. Press the [I/⏻] button to turn the power on.
2. Press three buttons of [▶II], [🗀 +] and [I/⏻] simultaneously.
3. Press the [FUNCTION] button to select CD function.
4. It enters the CD service mode and displays "SERVICE".
5. To exit from this mode, press three buttons of [▶II], [🗀 +] and [I/⏻] simultaneously.

Key Operation:

[TUNING + ▶▶ ▷▷I], [– TUNING I◁◁ ◀◀]:

Use these keys to move the SLED. When [TUNING + ▶▶ ▷▷I] is pressed in this mode, the SLED moves to outer circumference and the message "SLED OUT" is displayed.

When [– TUNING I◁◁ ◀◀] is pressed in this mode, the SLED moves to inner circumference and the message "SLED IN" is displayed.

[DISPLAY]:

Use this key to turn the optical pick-up laser power on and off. When the laser power is turned on, the message "LD ON" is displayed. When the laser power is turned off, the message "LD OFF" is displayed.

CD ERROR CODE

The past errors of the optical pick-up system (= optical unit + CD board) are displayed as the BD Errors as shown below.

Procedure:

1. Press the [I/⏻] button to turn the power on.
2. Press the [FUNCTION] button to select CD function.
3. Press three buttons of [■], [DSGX] and [I/⏻] simultaneously (EC69i/EC79i: US, Canadian models).
   Press three buttons of [🗀 +], [■] and [DISPLAY] simultaneously (EC79i: UK, Australian/EC99i).
4. Then, the BD error code is displayed as "D0xxxxxx" (x means hexadecimal number) on the liquid crystal display as shown below.
5. Every pressing of the [TUNING + ▶▶ ▷▷I] button in this mode increments the number after "D" starting from "D0" up to "D9", and then returns to "D0". Every pressing of the [– TUNING I◁◁ ◀◀] button in this mode decrements the number after "D". The smaller the error code number is, the newer the error content is.
6. To release from this mode, press the [I/⏻] button to turn the power off.

Contents of "BD Errors"

Error display example

D 0 02 09 01
① ② ③ ④

① It indicates the error history number
0 to 9: The error code number 0 indicates the newest error.

② It indicates the error content
01: The focus servo cannot lock-in.
02: GFS is no good (NG).
03: The startup time exceeds the specified period of time (time over)
04: The focus servo is unlocked continuously.
05: Q code cannot be obtained within the specified period of time.
06: The tracking servo cannot lock-in.
07: Blank disc

③ It indicates the on-going processing of optical pick-up system (= optical unit + CD board) when the trouble has occurred.
01: The CD SHIP mode processing is in progress.
02: The POWER OFF processing is in progress.
03: The INITIALIZE processing is in progress.
04: The optical pick-up system (= optical unit + CD board) is in the stop state.
05: The STOP operation is in progress.
06: The startup processing is in progress.
07: The TOC read-in processing is in progress.
08: The SEARCH operation is in progress.
09: The PLAY operation is in progress.
0A: The PAUSE operation is in progress.
0B: The PLAY – MANUAL SEARCH operation is in progress.
0C: The PAUSE – MANUAL SEARCH operation is in progress.

④ It indicates the operation that is being processed when the trouble has occurred.
It indicates the step number of each processing specified by ③.
Because the numbers of steps are different in each processing, this number is different in each processing.

CD FACTORY MODE

Note 1: Do not enter the this mode while any other test mode is in progress.
Note 2: Do not enter any other test mode while the this mode is in progress.

Procedure:

1. Press the [I/⏻] button to turn the power on.
2. Press the [FUNCTION] button to select CD function
3. Press three buttons of [▶II], [iPod] and [I/⏻] simultaneously.
4. It enters the CD factory mode and the message "FACTORY" is displayed. When the [CD] button is pressed four times, the following message (initial display) is displayed.

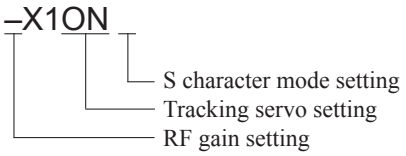

Key Operation:

[CD]:

The display changes in the following order whenever the button is pressed.

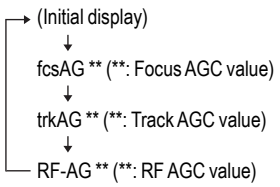

[DSGX]:

RF gain setting changes whenever the button is pressed.
"–": No gain fixation.
"AL": Fix to the gain for AL disc.
"RW": Fix to the gain for RW disc.

[iPod]:

Tracking servo setting changes whenever the button is pressed.
"ON": Tracking servo ON.
"OFF": Tracking servo OFF.

[FUNCTION]:

S character mode setting changes whenever the button is pressed.
" ": S character mode OFF.
"S": S character mode ON.

5. To release from this mode, press three buttons of [▶II], [iPod] and [I/⏻] simultaneously.

SECTION 5
ELECTRICAL ADJUSTMENTS

CD SECTION

Note:
1. CD Block is basically constructed to operate without adjustment.
2. Use YEDS-18 disc (Part No. 3-702-101-01) unless otherwise indicated.
3. Use an oscilloscope with more than 10 MΩ impedance.
4. Clean the object lens by an applicator with neutral detergent when the signal level is low than specified value with the following checks.
5. Check the focus bias check when optical pick-up block is replaced.

FOCUS BIAS CHECK

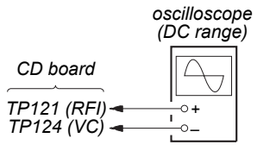

Procedure:
1. Connect the oscilloscope to TP121 (RFI) and TP124 (VC) on the CD board.
2. Press the [I/⏻] button to turn the power on, and press the [FUNCTION] button to select CD function.
3. Set disc (YEDS-18) and press the [▶II] button to playback.
4. Confirm that oscilloscope waveform is as shown in the figure below (eye pattern).
   A good eye pattern means that the diamond shape (◊) in the center of the waveform can be clearly distinguished.

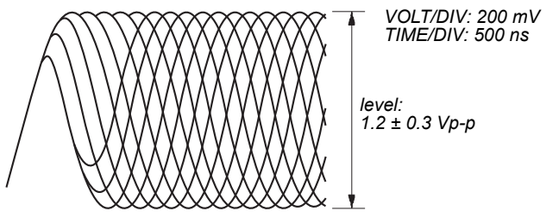

Checking Location:
– CD Board (Conductor Side) –

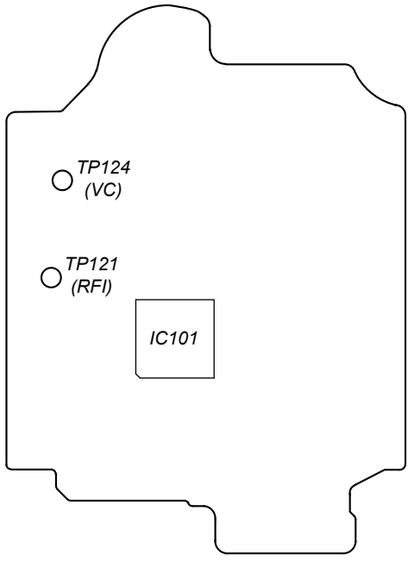

TUNER SECTION

0 dB = 1 μV

[AM]
Setting:
FUNCTION: AM

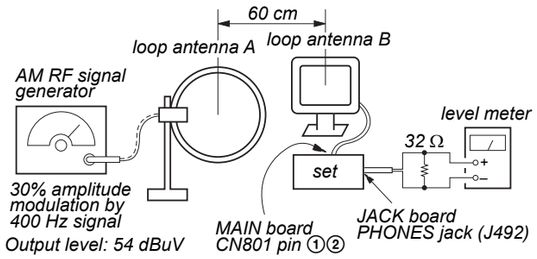

[FM]
Setting:
FUNCTION: FM

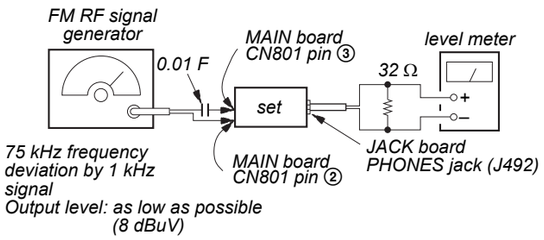

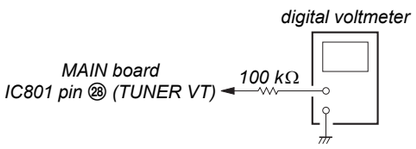

- Repeat the procedures in each adjustment several times.

AM FREQUENCY COVERAGE CONFIRMATION (US, Canadian and Australian models)	
Frequency Display	Reading on Digital Voltmeter
530 kHz	1.45 ± 0.3 V
1,710 kHz	7.7 ± 0.5 V

AM FREQUENCY COVERAGE CONFIRMATION (UK model)	
Frequency Display	Reading on Digital Voltmeter
531 kHz	1.45 ± 0.3 V
1,602 kHz	7.2 ± 0.5 V

AM TRACKING ADJUSTMENT (US, Canadian and Australian models)	
Adjust for a maximum reading on level meter	
L805	530 kHz

AM TRACKING ADJUSTMENT (UK model)	
Adjust for a maximum reading on level meter	
L805	531 kHz

FM FREQUENCY COVERAGE ADJUSTMENT		
Adjustment Part	Frequency Display	Reading on Digital Voltmeter
L803	87.5 kHz	1.75 ± 0.1 V
Confirmation	108 kHz	6.2 ± 0.5 V

FM TRACKING ADJUSTMENT	
Adjust for a minimum reading on level meter	
L804	98 MHz

FM DETECTOR ADJUSTMENT
Setting:
FUNCTION: FM

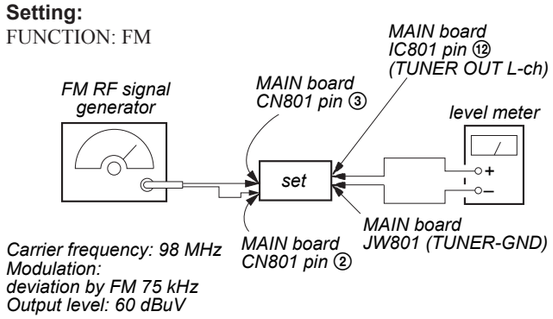

1. Turn the set to 98 MHz.
2. Adjust L802 so that modulation distortion may become the best in the vicinity of the maximum value where the tuner out level becomes –15 dBuV or more.

FM AUTO STOP CHECK

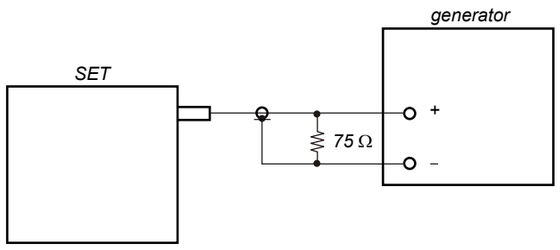

Procedure :
1. Turn the power on.
2. Input the following signal from Signal Generator to FM antenna input directly.

Carrier frequency : A = 87.5 MHz, B = 98 MHz, C = 108 MHz
Deviation : 75 kHz
Modulation : 1 kHz
ANT input : 35 dBu (EMF)

Note: Please use 75 ohm "coaxial cable" to connect SG and the set. You cannot use video cable for checking.
Please use SG whose output impedance is 75 ohm.

3. Set to FM tuner function and scan the input FM signal with automatic scanning.
4. Confirm that input Frequency of A, B and C detected and automatic scanning stops.

The stop of automatic scanning means "The station signal is received in good condition".

Adjustment Location and Connecting Points:

– MAIN Board (Component Side) –

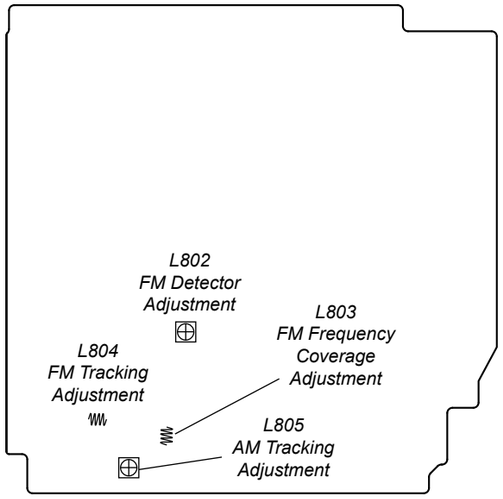

– MAIN Board (Conductor Side) –

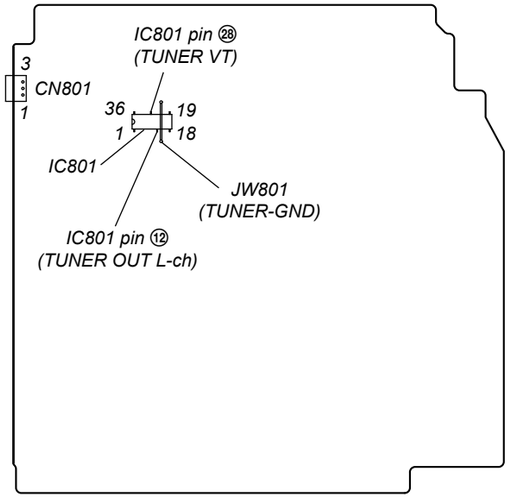

SECTION 6
DIAGRAMS

6-1. BLOCK DIAGRAM - CD, TUNER Section -

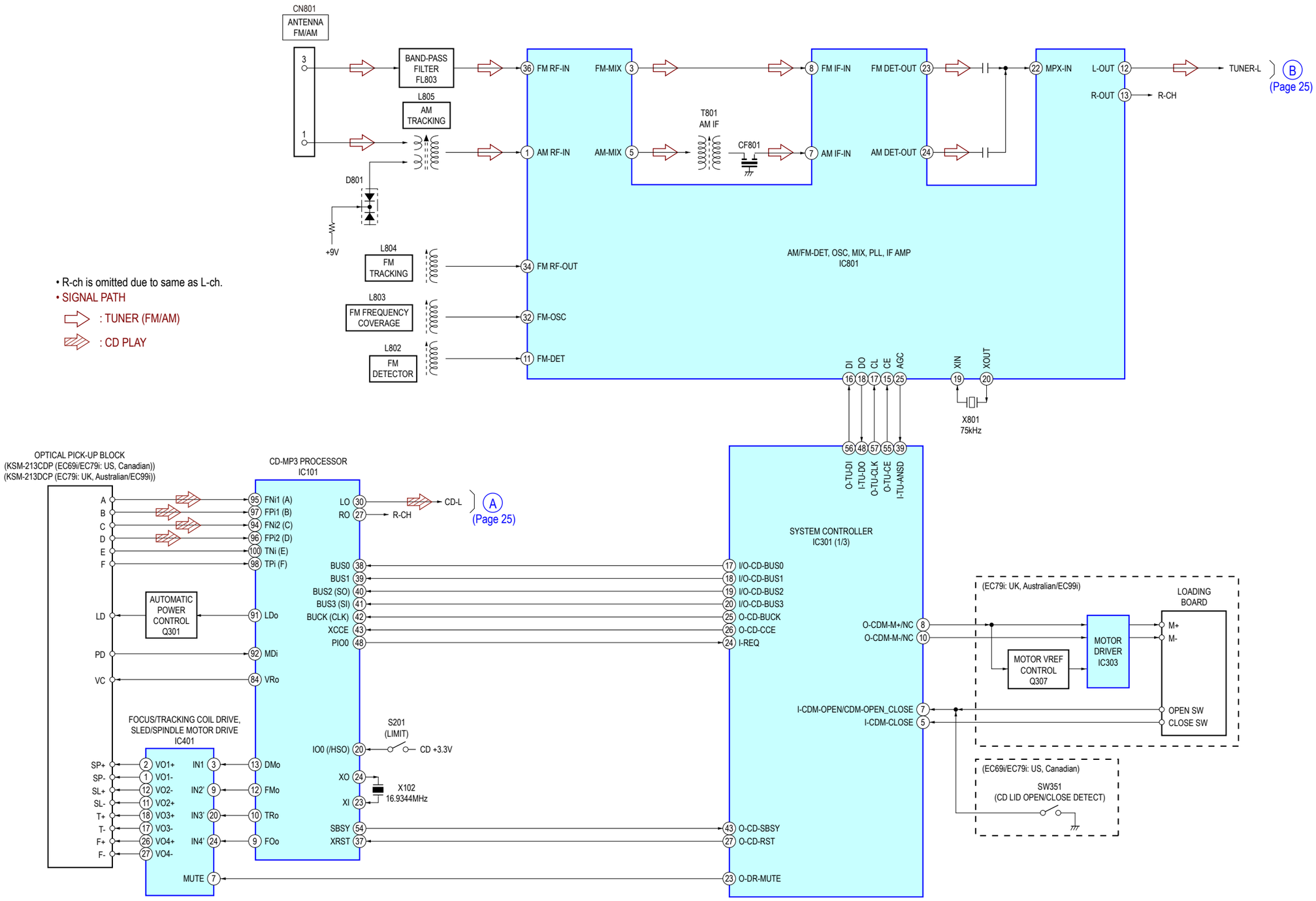

6-2. BLOCK DIAGRAM - MAIN Section -

- R-ch is omitted due to same as L-ch.
- SIGNAL PATH

: TUNER (FM/AM)
: CD PLAY
: iPod
: PC IN

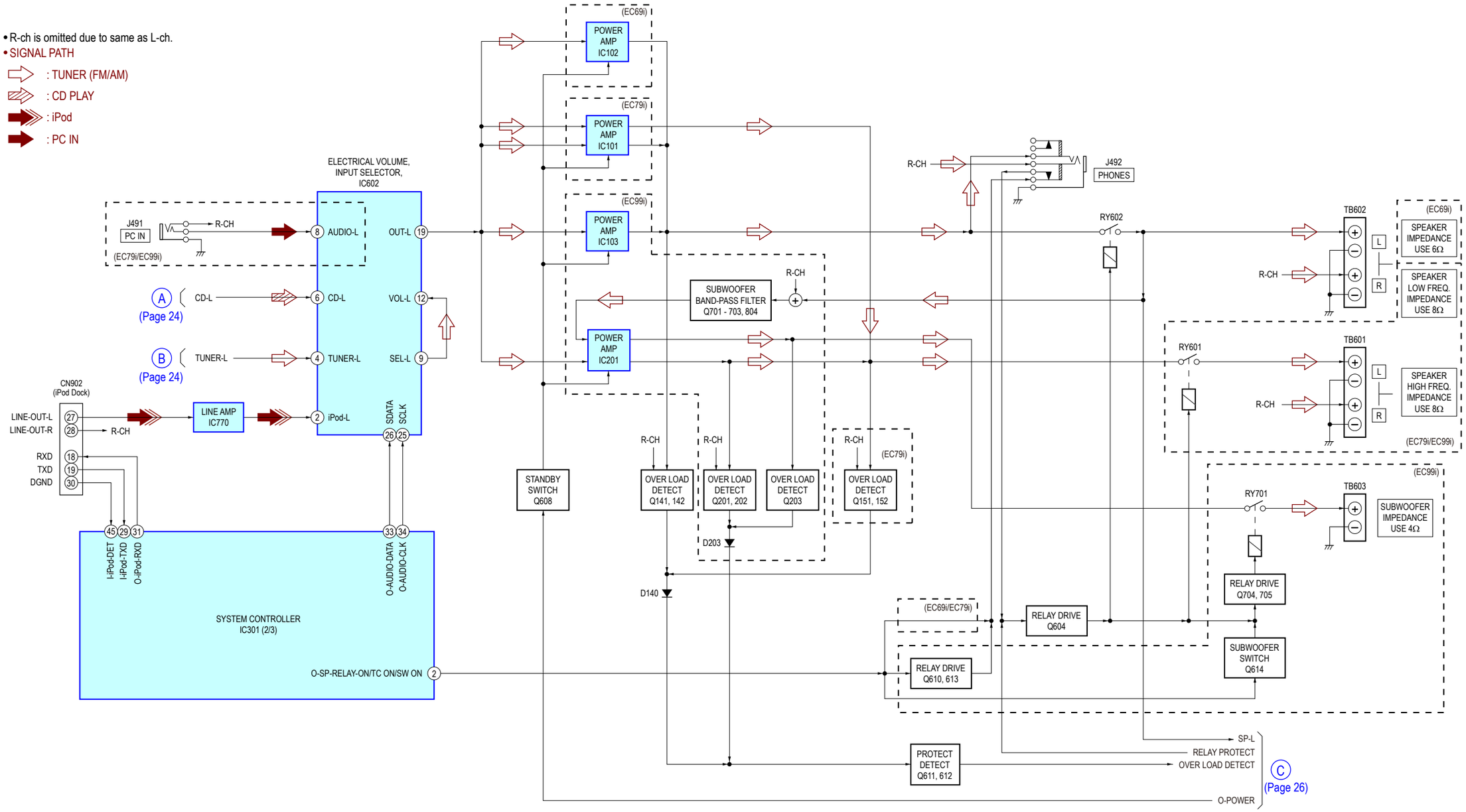

6-3. BLOCK DIAGRAM - PANEL, POWER SUPPLY Section -

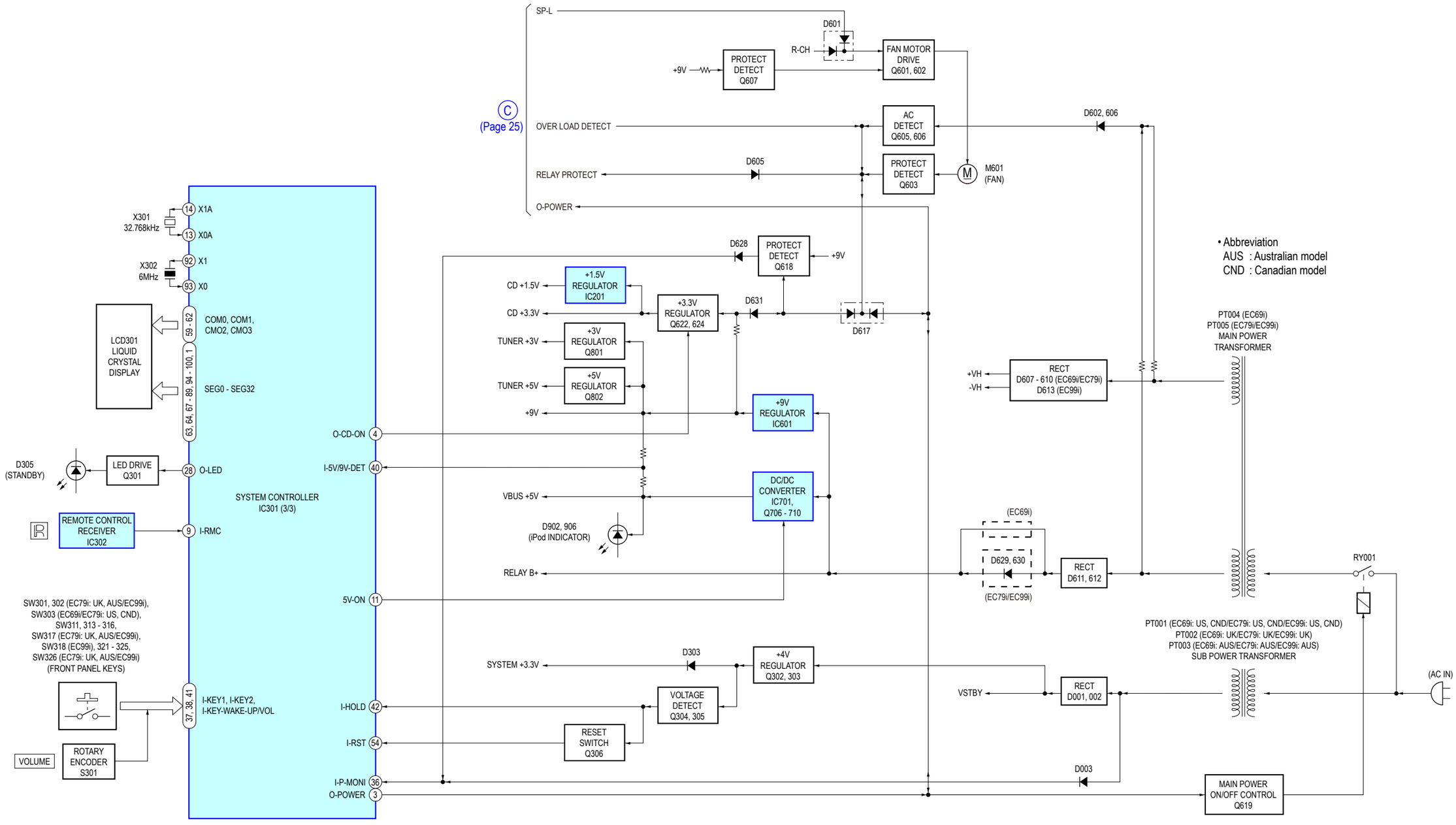

THIS NOTE IS COMMON FOR PRINTED WIRING BOARDS AND SCHEMATIC DIAGRAMS. (In addition to this, the necessary note is printed in each block.)

For Printed Wiring Boards.

Note:

- ○——: parts extracted from the component side.
- ——: parts extracted from the conductor side.
- : indicates side identified with part number.
- : Pattern from the side which enables seeing. (The other layers' patterns are not indicated.)

Caution:	
Pattern face side: (Conductor Side)	Parts on the pattern face side seen from the pattern face are indicated.
Parts face side: (Component Side)	Parts on the parts face side seen from the parts face are indicated.

Caution:	
Pattern face side: (SIDE B)	Parts on the pattern face side seen from the pattern face are indicated.
Parts face side: (SIDE A)	Parts on the parts face side seen from the parts face are indicated.

- Indication of transistor.

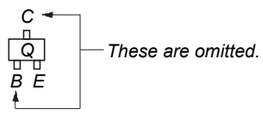

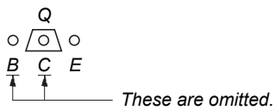

- Abbreviation
  AUS : Australian model
  CND : Canadian model

For Schematic Diagrams.

Note:

- All capacitors are in μF unless otherwise noted. (p: pF) 50 WV or less are not indicated except for electrolytics and tantalums.
- All resistors are in Ω and 1/4 W or less unless otherwise specified.
- △ : internal component.
- : nonflammable resistor.
- : panel designation.

Note:	**Note:**
The components identified by mark ⚠ or dotted line with mark ⚠ are critical for safety. Replace only with part number specified.	Les composants identifiés par une marque ⚠ sont critiques pour la sécurité. Ne les remplacer que par une piéce portant le numéro spécifié.

- : B+ Line.
- : B– Line.
- : adjustment for repair.
- Voltages and waveforms are dc with respect to ground under no-signal (detuned) conditions.

– CD Board –
no mark: CD PLAY
– Other Boards –
no mark: TUNER (FM/AM)

- Voltages are taken with VOM (Input impedance 10 MΩ). Voltage variations may be noted due to normal production tolerances.
- Waveforms are taken with a oscilloscope. Voltage variations may be noted due to normal production tolerances.
- Circled numbers refer to waveforms.
- Signal path.
  : TUNER (FM/AM)
  : CD PLAY
  : iPod
  : PC IN
- Abbreviation
  AUS : Australian model
  CND : Canadian model

- **Circuit Boards Location**

– EC69i –

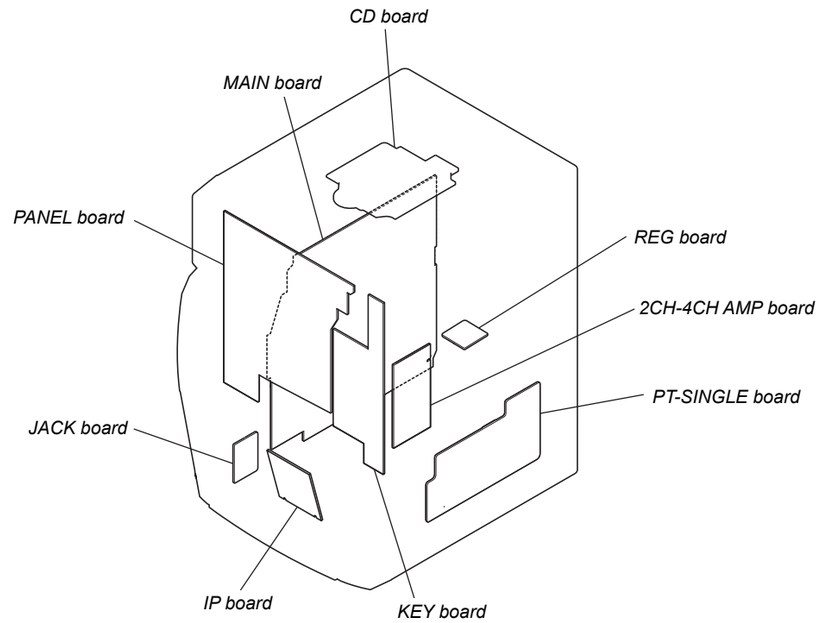

– EC79i/EC99i –

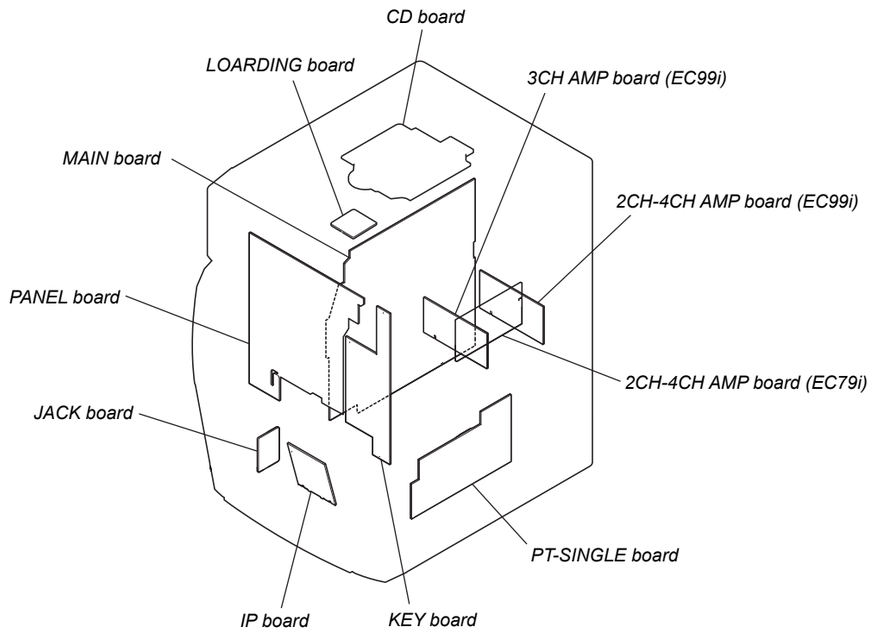

6-4. PRINTED WIRING BOARD - CD Board -

• See page 27 for Circuit Boards Location. • : Uses unleaded solder.

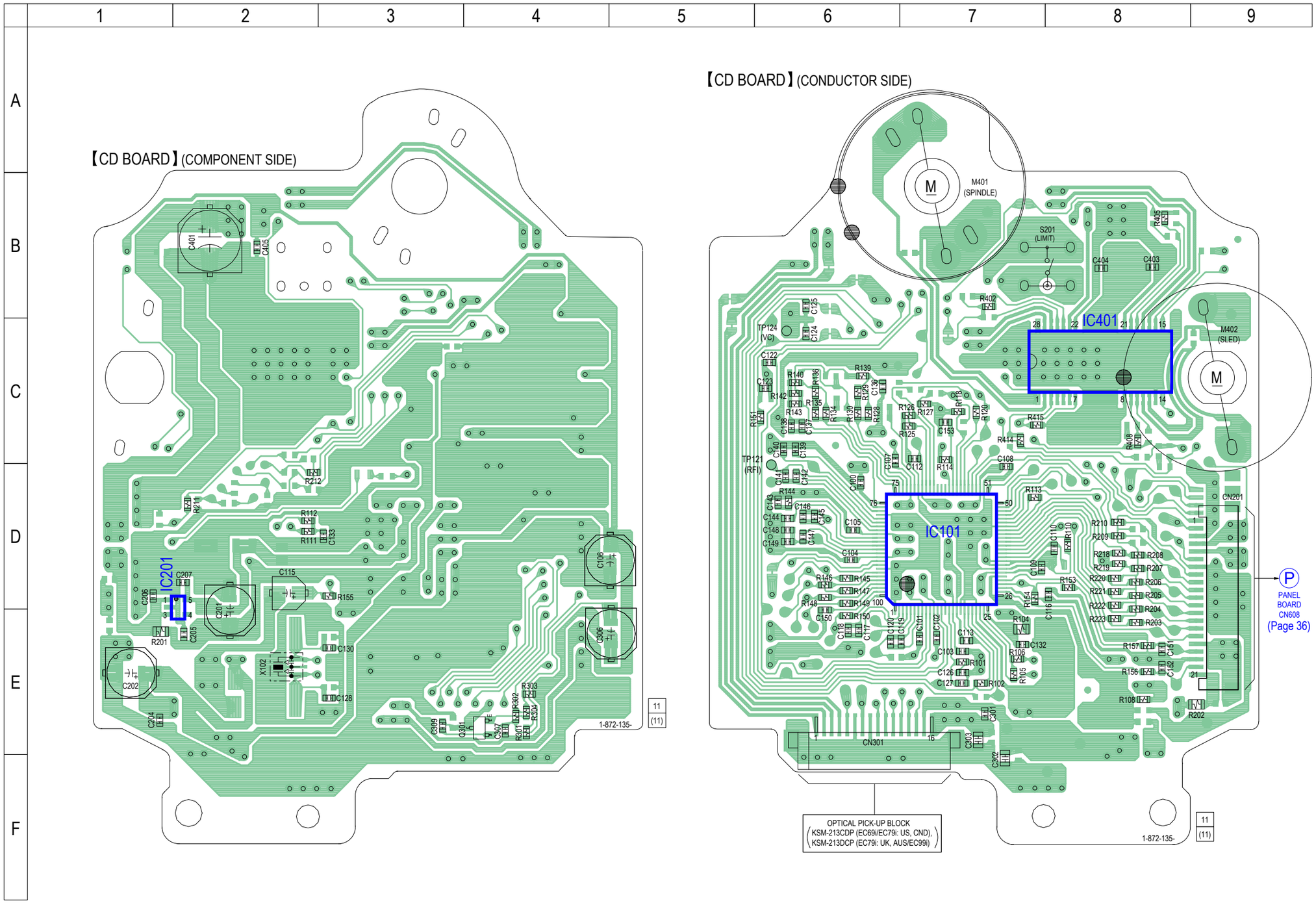

6-5. SCHEMATIC DIAGRAM - CD Board -

• See page 40 for Waveforms. • See page 40 for IC Block Diagrams. • See page 42 for IC Pin Function Description.

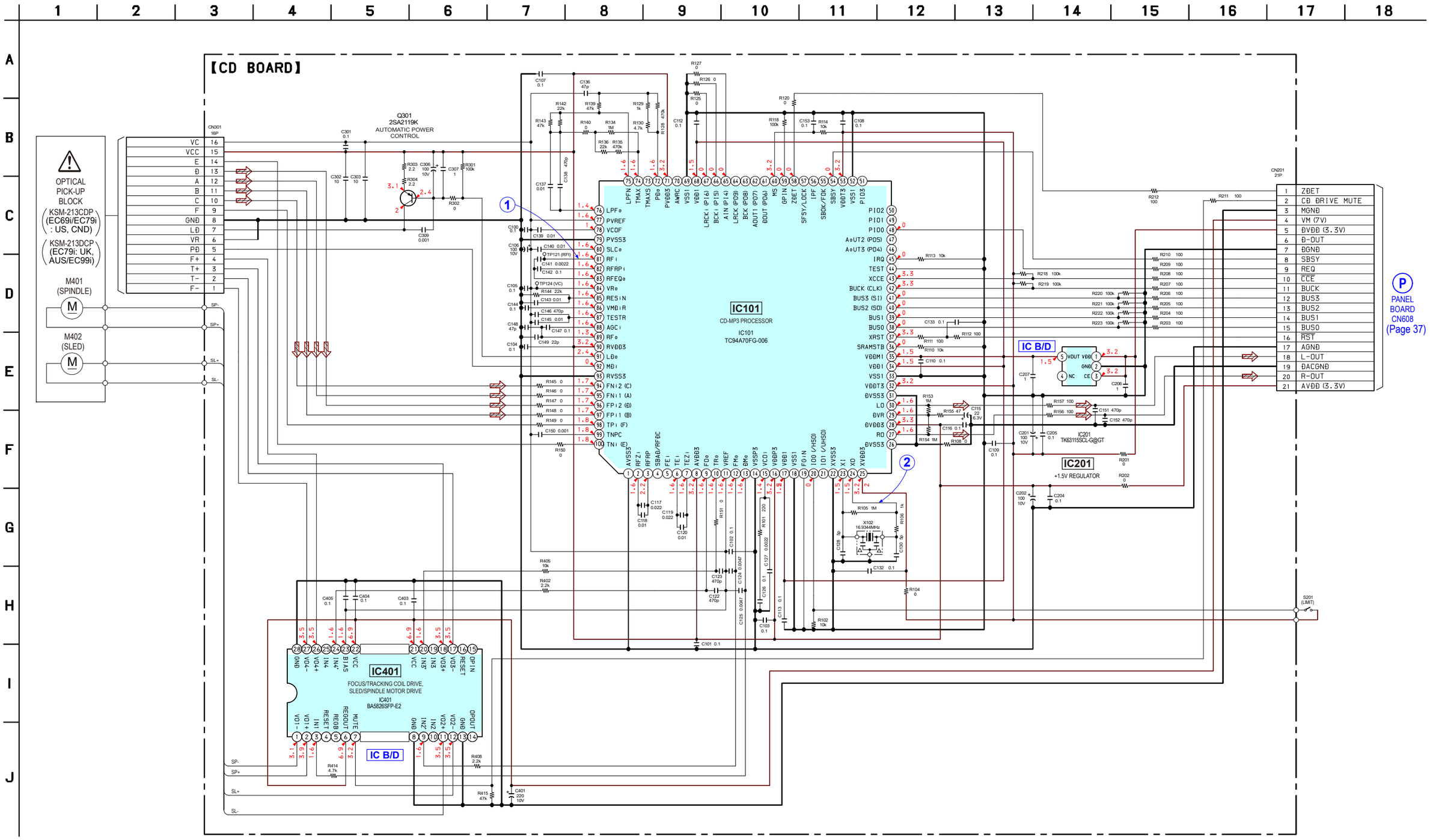

6-6. SCHEMATIC DIAGRAM - MAIN Board (1/2) - • See page 40 for Waveforms. • See page 40 for IC Block Diagrams.

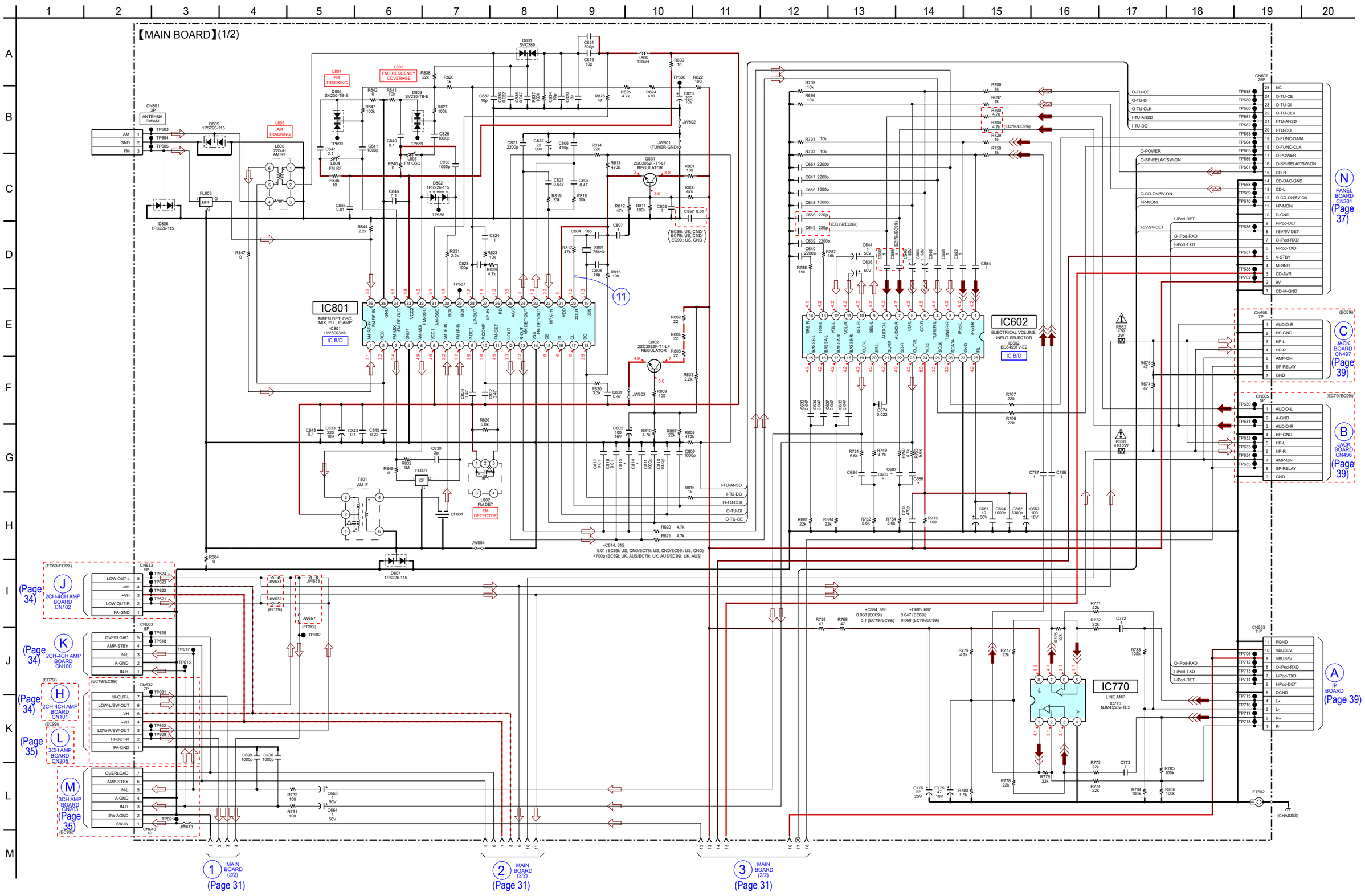

6-7. SCHEMATIC DIAGRAM - MAIN Board (2/2) - • See page 40 for IC Block Diagrams.

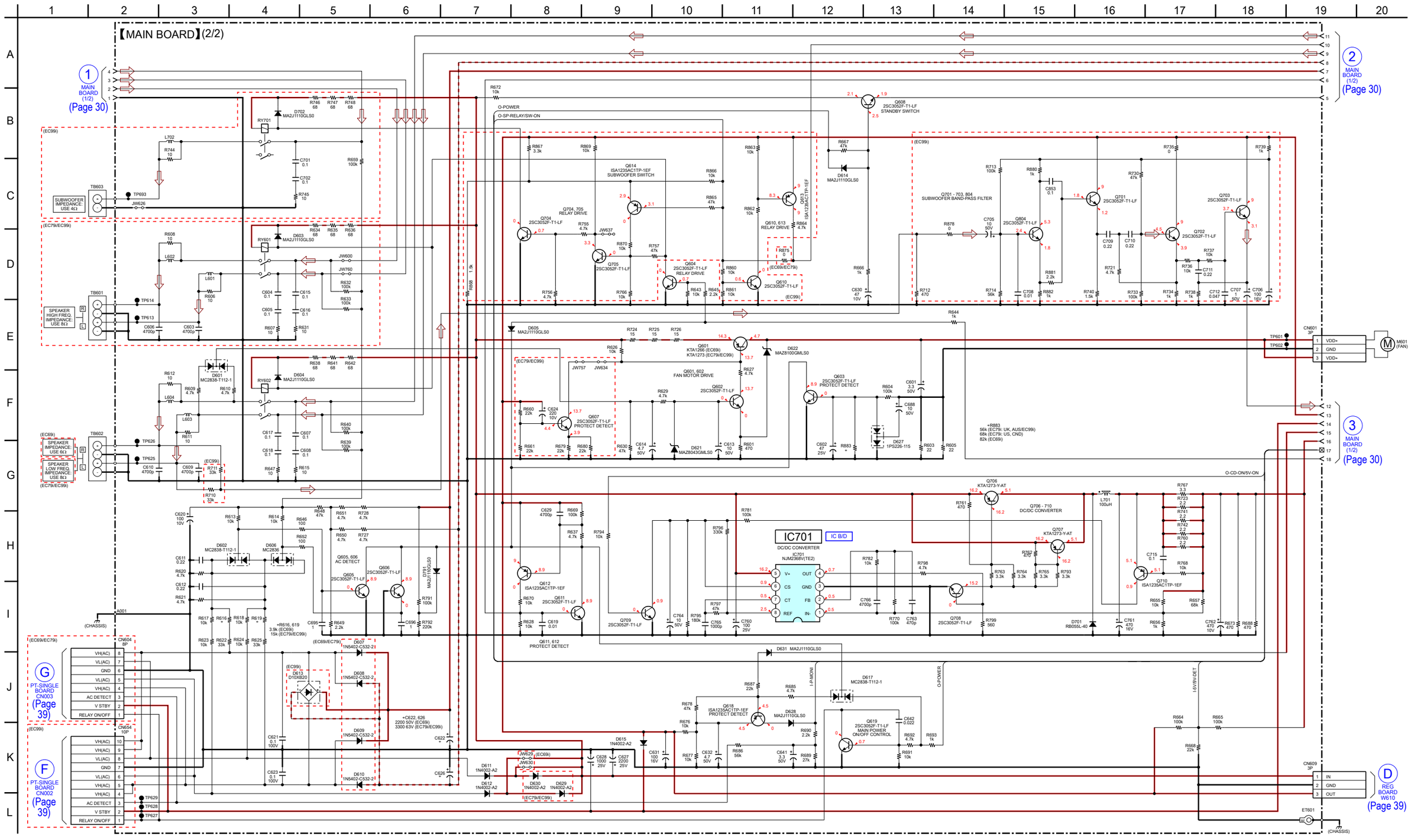

6-8. PRINTED WIRING BOARD - MAIN Board - • See page 27 for Circuit Boards Location. • : Uses unleaded solder.

• **Semiconductor Location**

Ref. No.	Location
D601	E-3
D602	F-6
D603	E-3
D604	G-3
D605	E-5
D606	E-6
D607	G-5
D608	G-5
D609	G-5
D610	G-5
D611	H-6
D612	H-6
D613	G-6
D614	C-6
D615	E-7
D617	E-6
D621	D-5
D622	D-5
D627	D-4
D628	E-7
D629	H-6
D630	H-6
D631	D-7
D701	H-8
D702	E-4
D791	E-5
D801	B-4
D802	B-4
D803	B-4
D804	B-3
D805	C-2
D806	B-2
D807	D-3
IC602	C-7
IC701	G-8
IC770	E-8
IC801	C-4
Q601	D-4
Q602	D-5
Q603	E-5
Q604	G-3
Q605	E-6
Q606	E-6
Q607	F-7
Q608	C-6
Q610	F-4
Q611	E-5
Q612	E-6
Q613	F-4
Q614	G-4
Q618	E-7
Q619	H-7
Q701	D-6
Q702	D-7
Q703	D-6
Q704	F-4
Q705	F-4
Q706	G-8
Q707	G-8
Q708	G-8
Q709	F-8
Q710	H-8
Q801	B-5
Q802	B-5
Q804	D-6

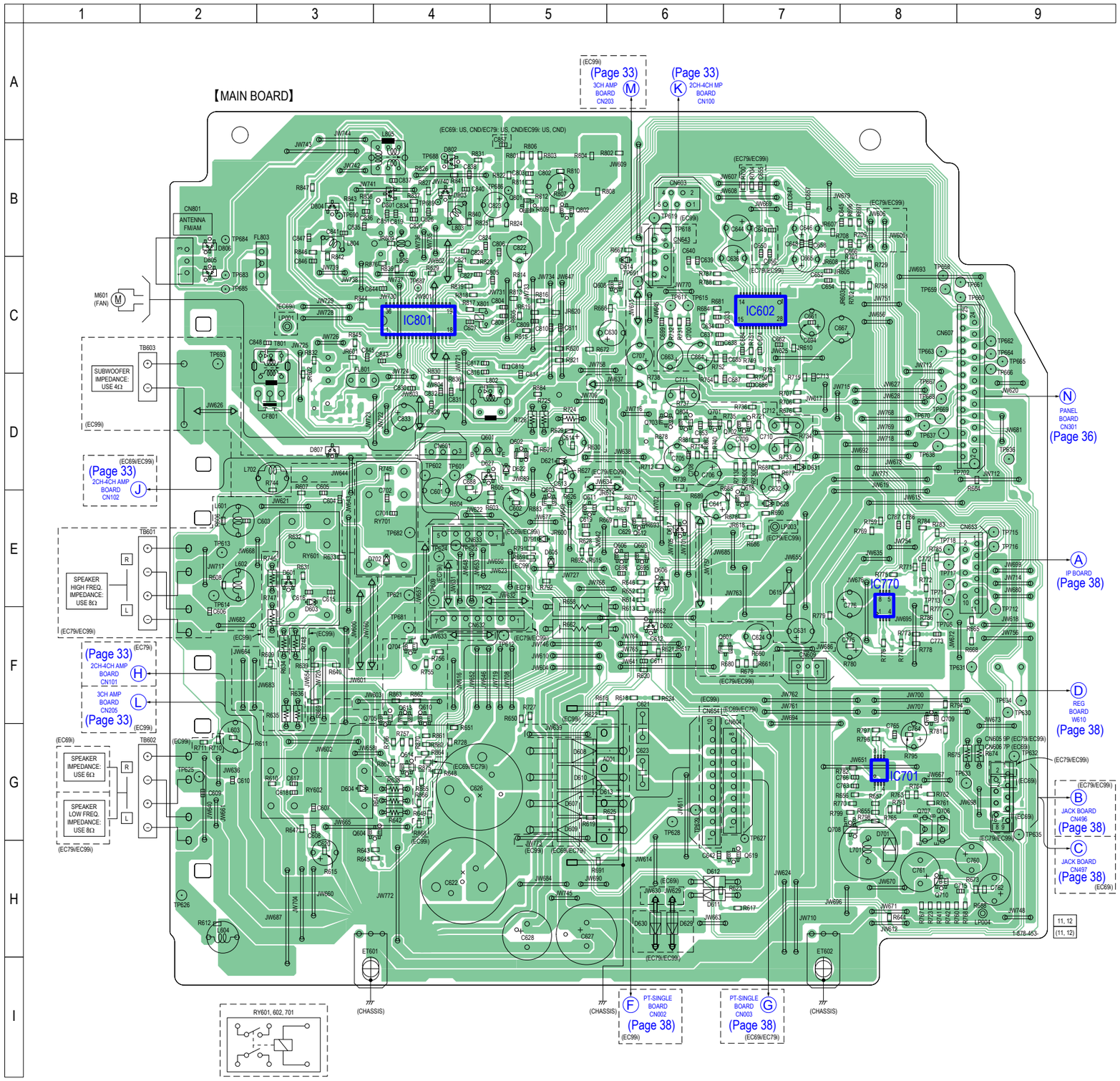

6-9. PRINTED WIRING BOARDS - AMP Section -

• See page 27 for Circuit Boards Location. • : Uses unleaded solder.

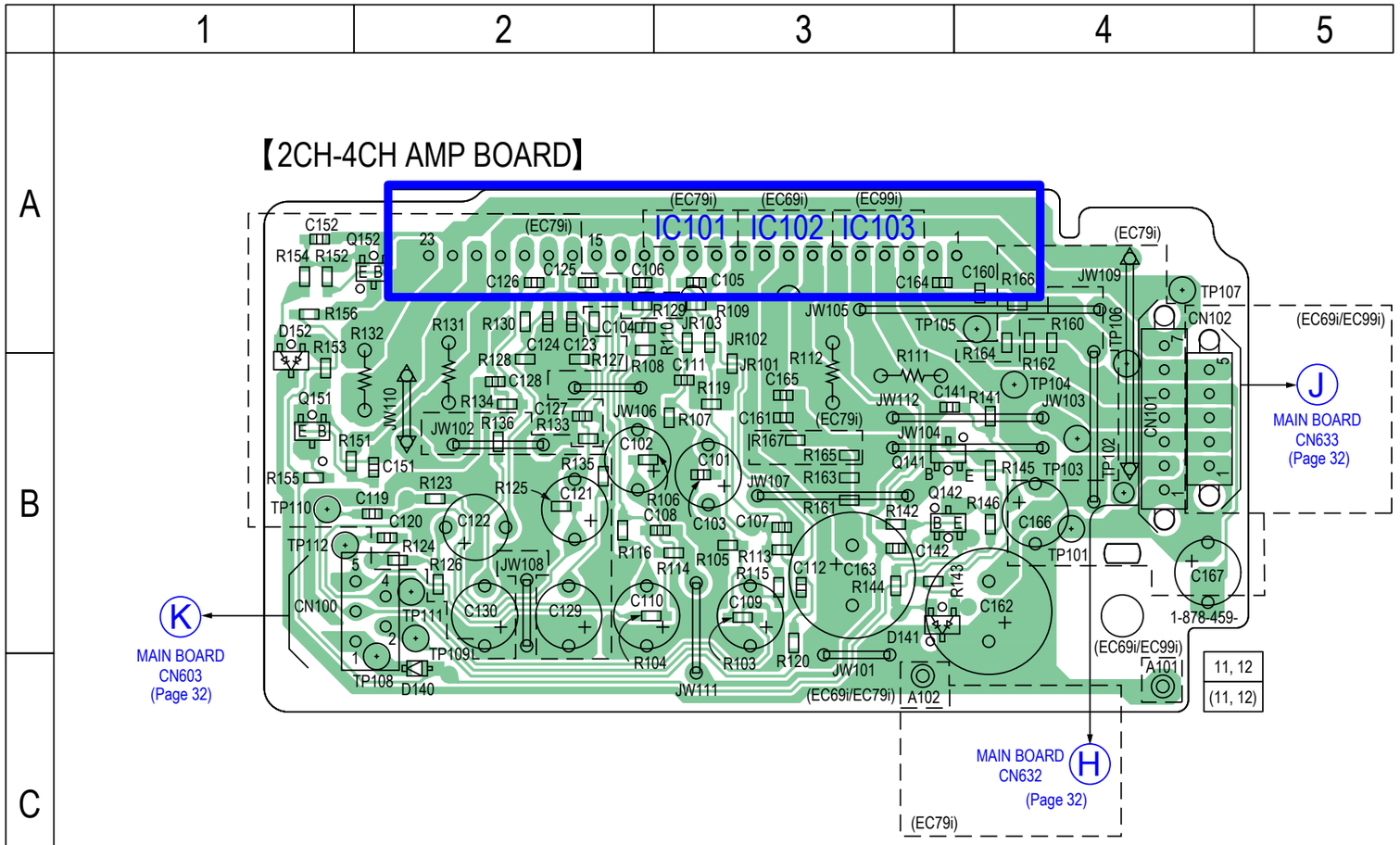

• Semiconductor Location

Ref. No.	Location
D140	C-2
D141	B-3
D152	B-1
D201	E-4
D202	D-1
D203	E-2
IC101	A-3
IC102	A-3
IC103	A-3
IC201	D-3
Q141	B-3
Q142	B-3
Q151	B-1
Q152	A-2
Q201	E-4
Q202	E-3
Q203	D-1

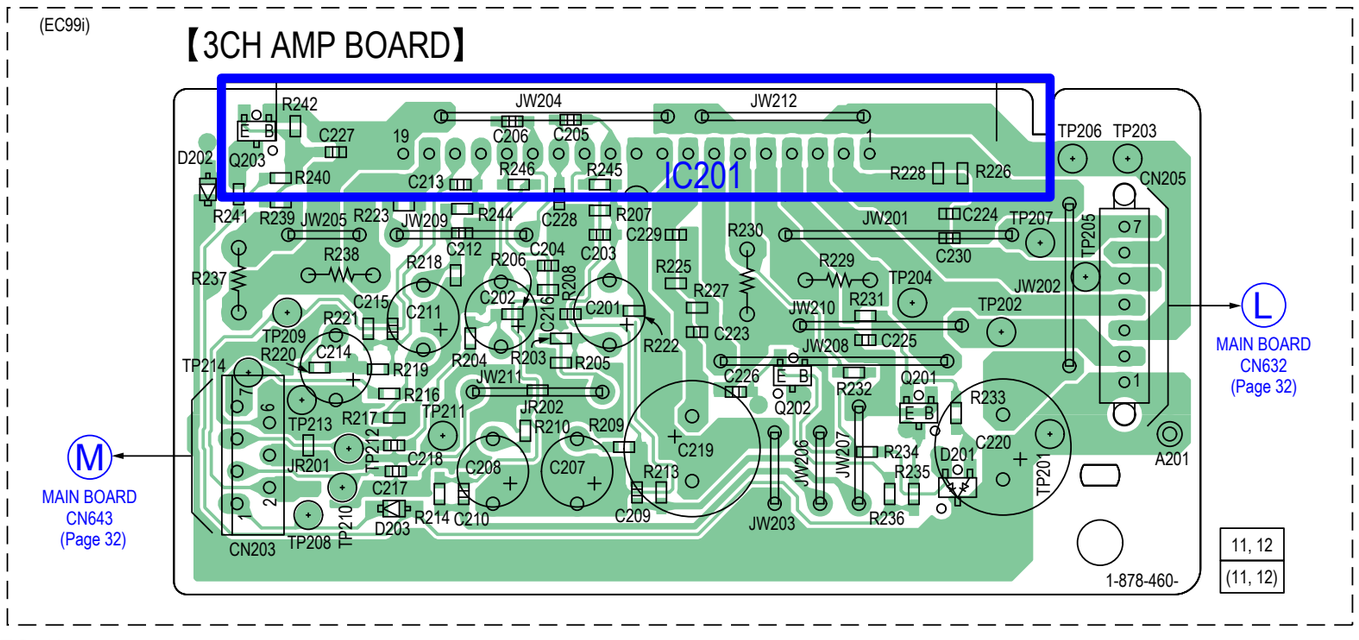

6-10. SCHEMATIC DIAGRAM - 2CH-4CH AMP Board -

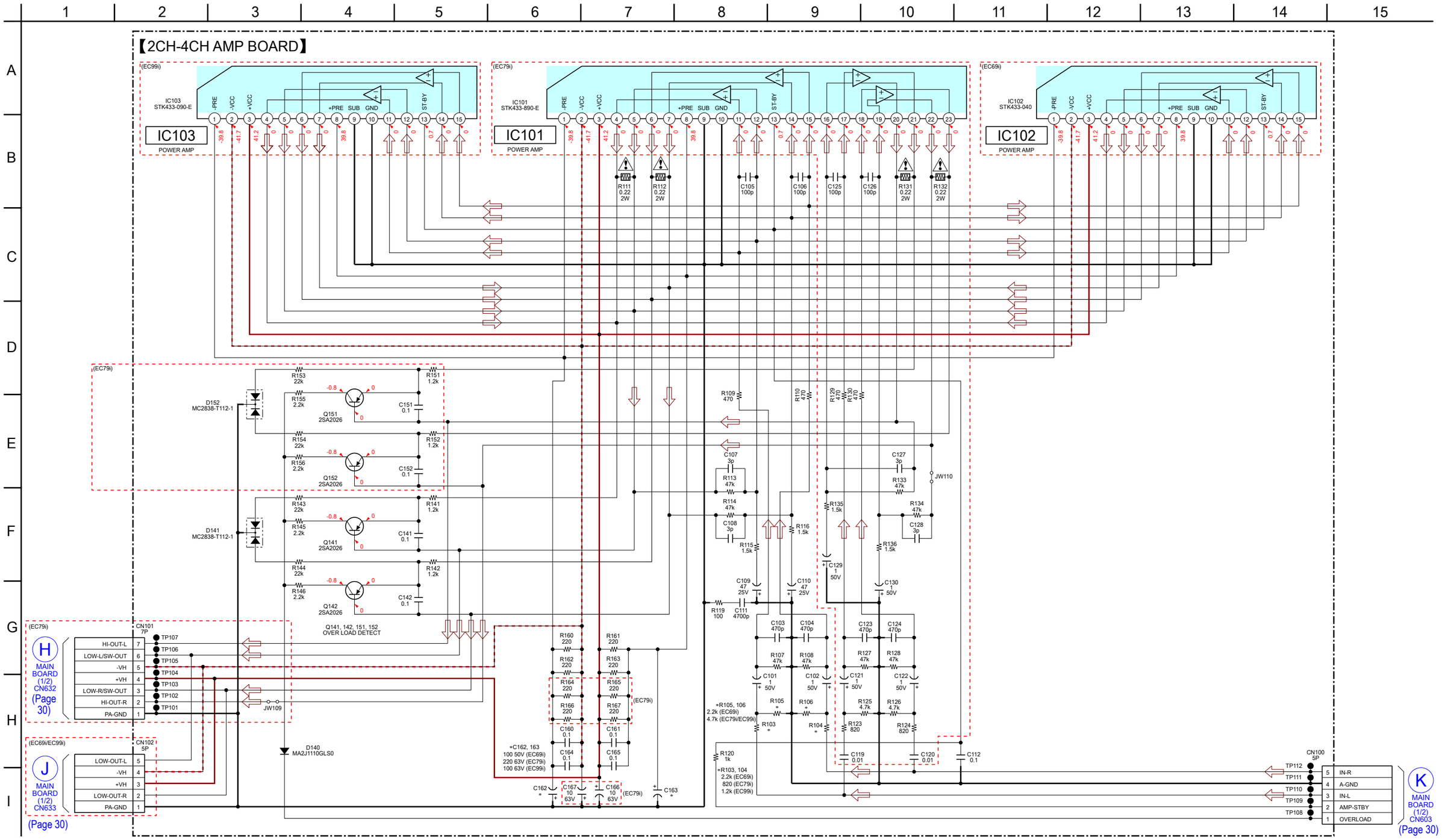

6-11. SCHEMATIC DIAGRAM - 3CH AMP Board (EC99i) -

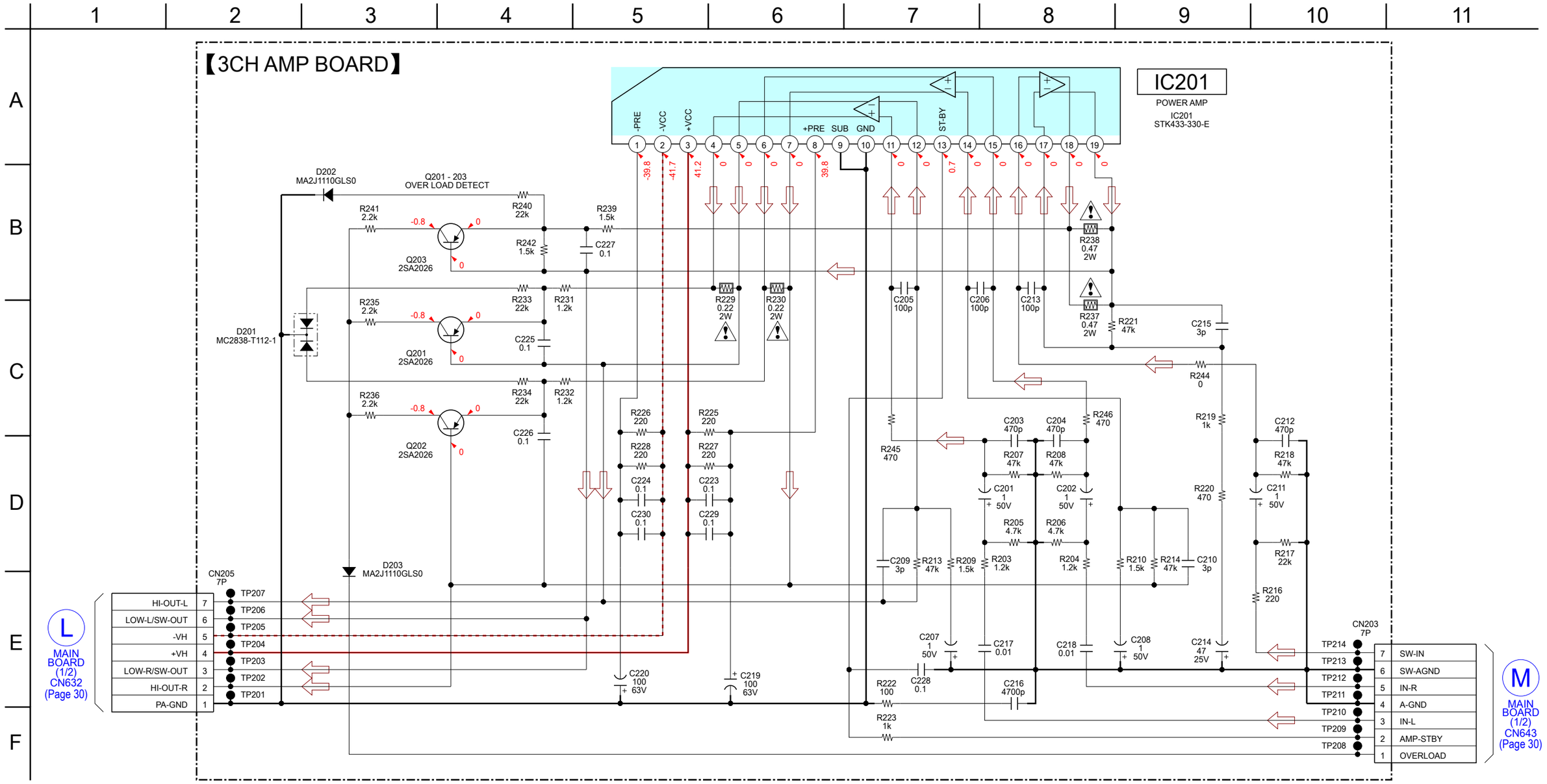

6-12. PRINTED WIRING BOARDS - PANEL Section -

• See page 27 for Circuit Boards Location. • : Uses unleaded solder.

• **Semiconductor Location**

Ref. No.	Location
D301	E-6
D302	E-6
D303	E-6
D304	C-5
D305	B-1
D306	F-2
D307	F-2
D618	E-4
D619	E-4
D620	E-3
IC301	B-4
IC302	B-5
IC303	F-2
Q301	B-1
Q302	E-6
Q303	E-6
Q304	F-6
Q305	E-6
Q306	E-6
Q307	E-2
Q622	E-4
Q624	F-4

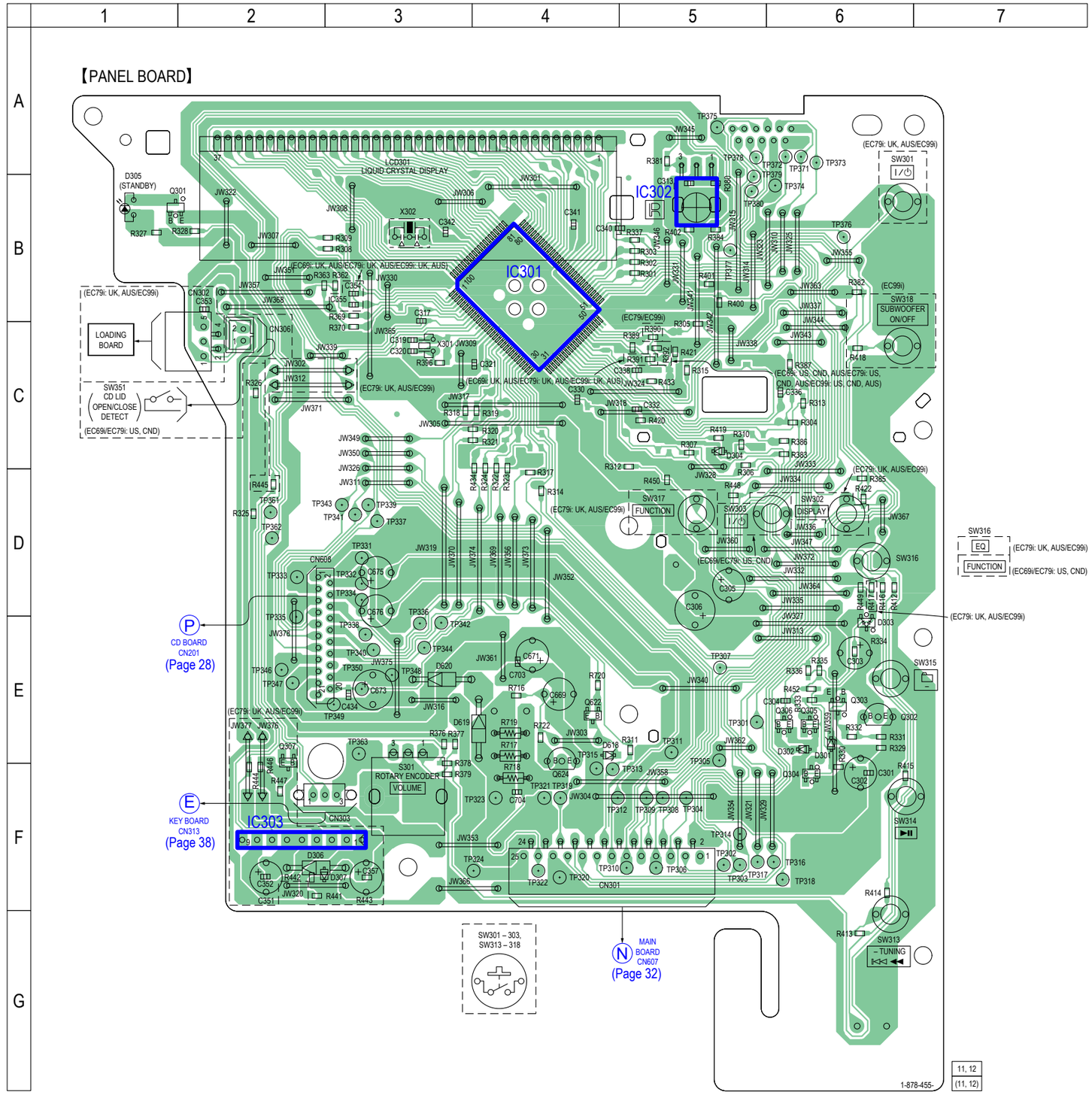

Note: When the LOADING board is damaged, exchange the entire CDM76A Assy (EC79i: UK, Australian/EC99i).

6-13. SCHEMATIC DIAGRAM - PANEL Section -

• See page 40 for Waveforms. • See page 40 for IC Block Diagrams. • See page 42 for IC Pin Function Description.

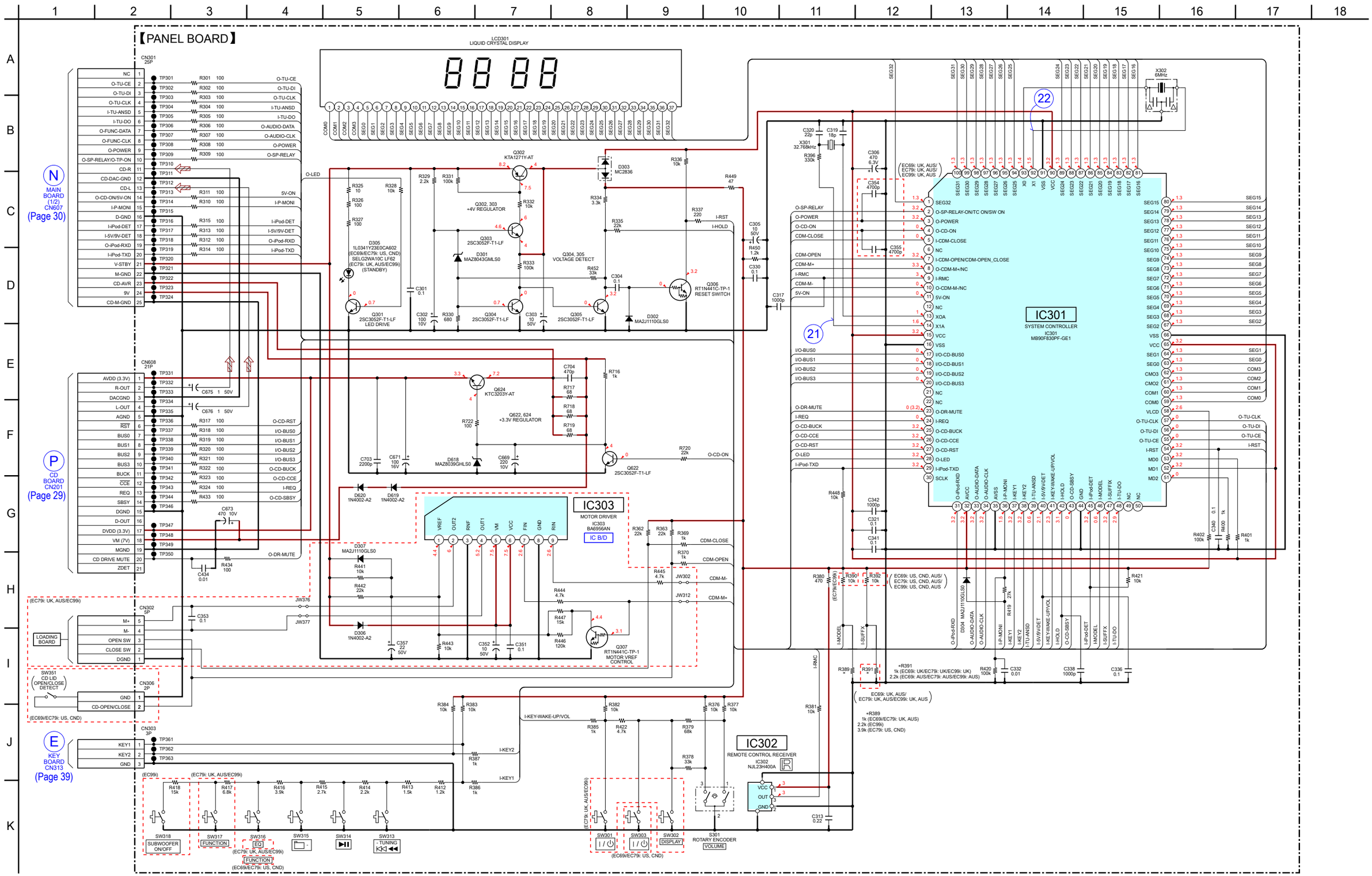

Note: When the LOADING board is damaged, exchange the entire CDM76A Assy (EC79i: UK, Australian/EC99i).

6-14. PRINTED WIRING BOARDS - AUDIO IN/OUT, KEY, POWER SUPPLY Section -

• See page 27 for Circuit Boards Location. • : Uses unleaded solder.

- **Semiconductor Location**

Ref. No.	Location
D001	F-8
D002	F-8
D003	F-8
D491	C-2
D901	B-7
D902	C-10
D906	C-9
IC601	A-2

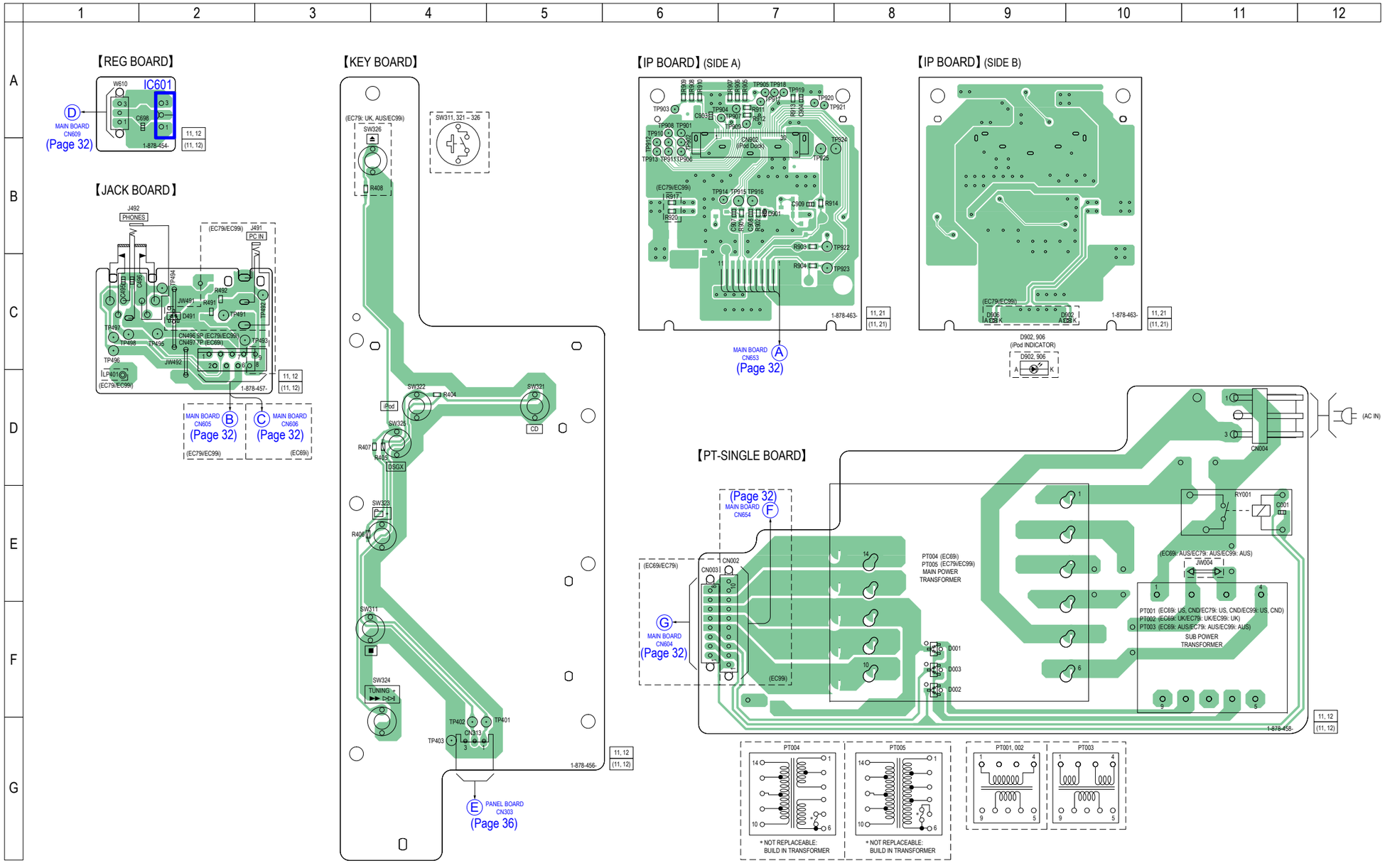

6-15. SCHEMATIC DIAGRAM - AUDIO IN/OUT, KEY, POWER SUPPLY Section -

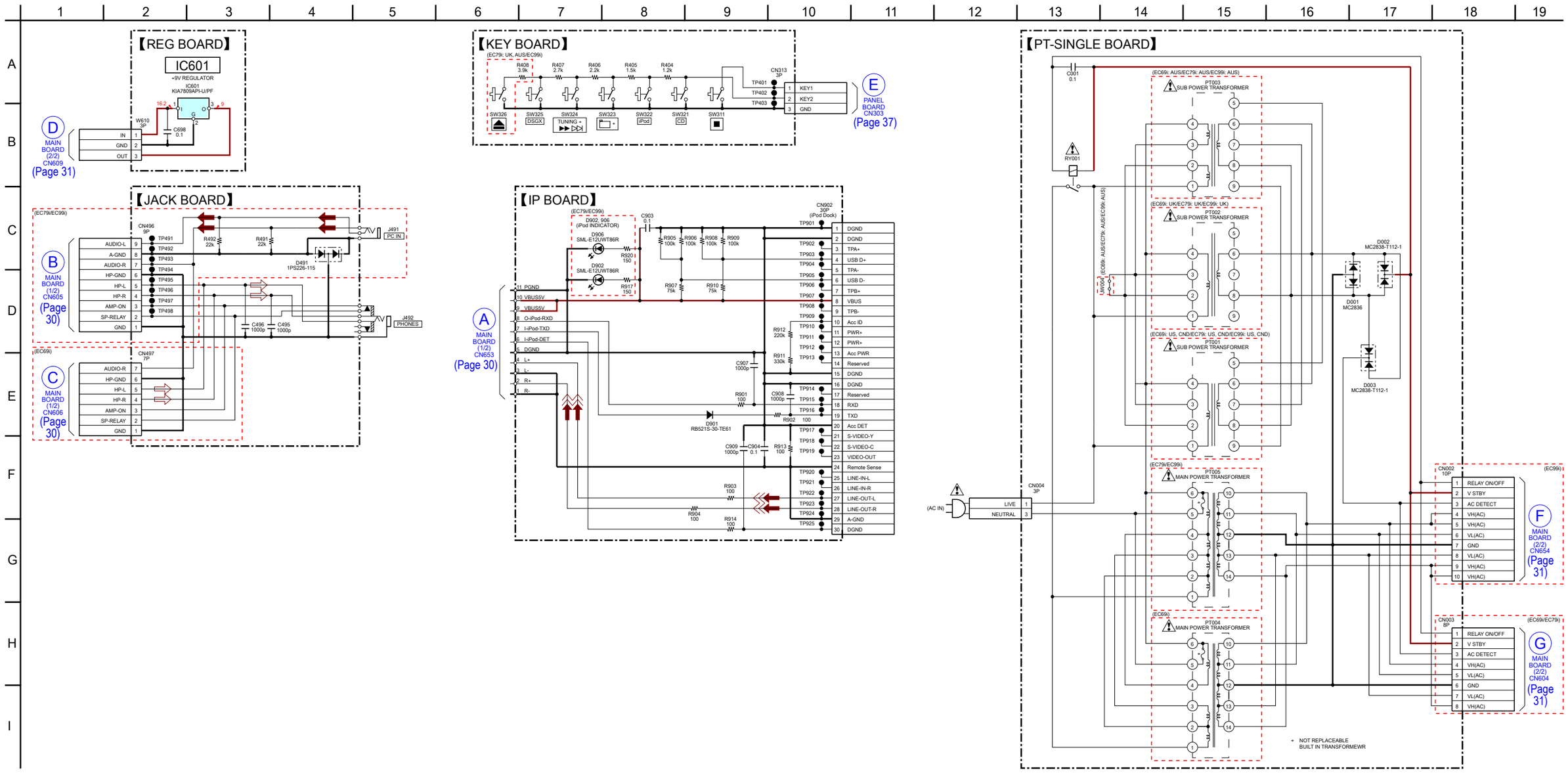

• **Waveforms**

– CD Board –

① **IC101 ㊶ (RFi) (CD play mode)**

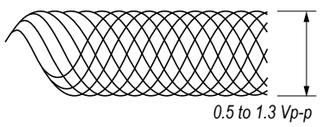

200 mV/DIV, 500 ns/DIV

② **IC101 ㉔ (XO) (CD play mode)**

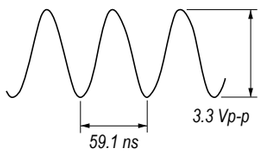

1 V/DIV, 20 ns/DIV

– MAIN Board –

⑪ **IC801 ⑳ (XOUT)**

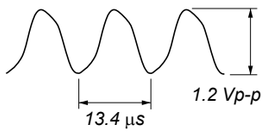

500 mV/DIV, 5 µs/DIV

– PANEL Board –

㉑ **IC301 ⑭ (X1A)**

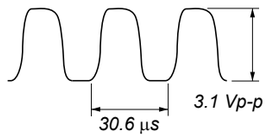

1 V/DIV, 10 µs/DIV

㉒ **IC301 ㉒ (X1)**

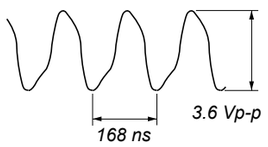

1 V/DIV, 100 ns/DIV

– MAIN Board –

IC602 BD3499FV-E2

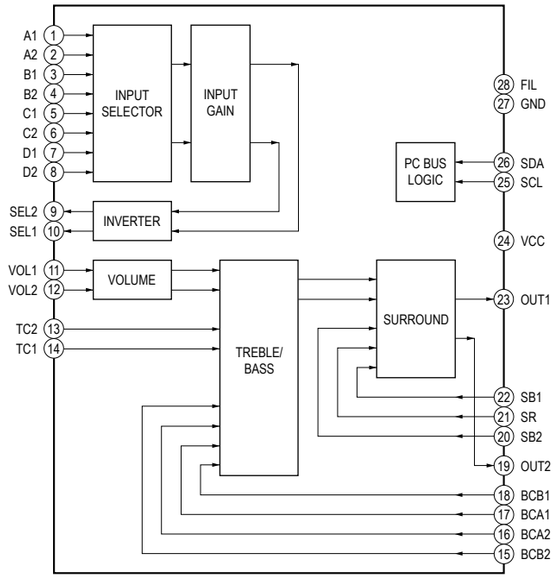

• **IC Block Diagrams**

– CD Board –

IC201 TK63115SCL-G@GT

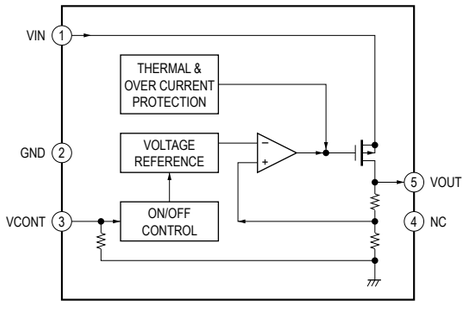

IC401 BA5826SFP-E2

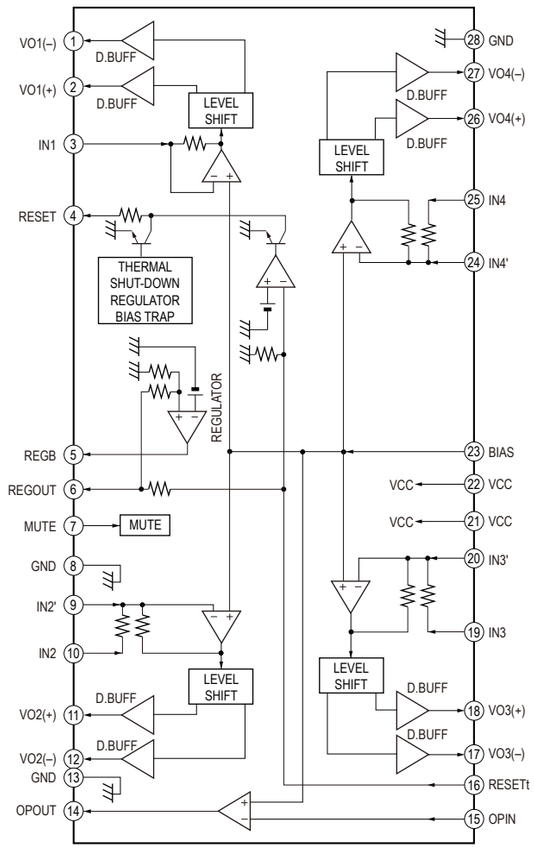

IC701 NJM2368V (TE2)

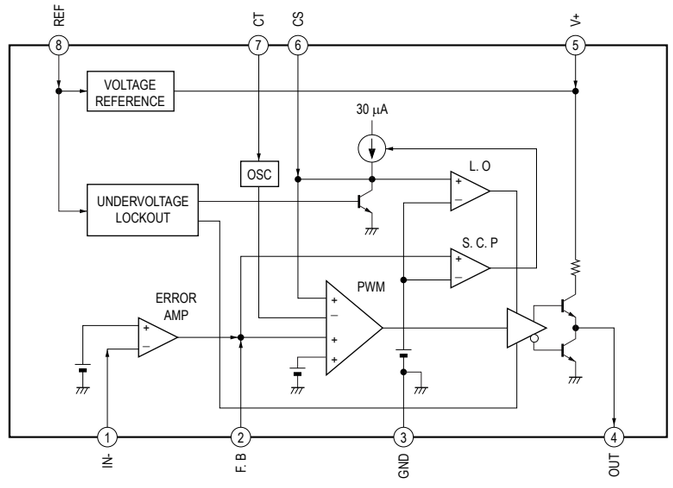

IC801 LV23003VA

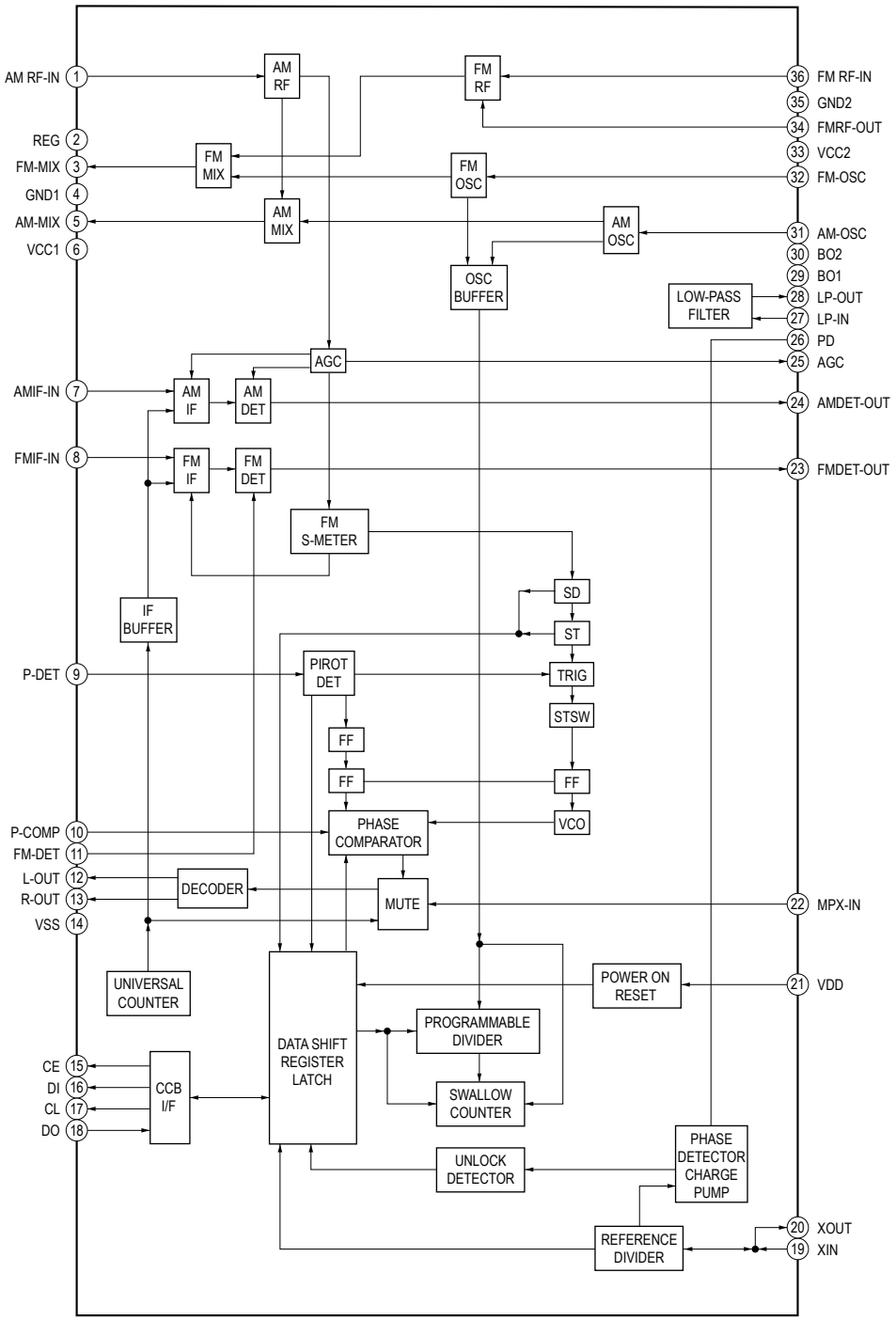

– PANEL Board –

IC303 BA6956AN

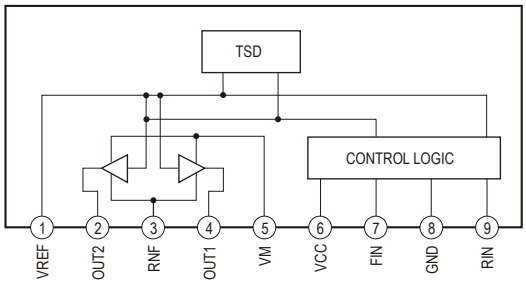

- **IC Pin Function Description**

CD BOARD IC101 TC94A70FG-006 (CD-MP3 PROCESSOR)

Pin No.	Pin Name	I/O	Description
1	AVSS3	-	Ground terminal
2	RFZi	I	RF ripple zero crossing signal input terminal
3	RFRP	O	RF ripple signal output terminal
4	SBAD/RFDC	O	Sub beam addition signal or RF peak detection signal output terminal Not used
5	FEi	O	Focus error signal output terminal Not used
6	TEi	O	Tracking error signal output terminal
7	TEZi	I	Tracking error zero crossing signal input terminal
8	AVDD3	-	Power supply terminal (+3.3V)
9	FOo	O	Focus coil drive signal output terminal
10	TRo	O	Tracking coil drive signal output terminal
11	VREF	I	Reference voltage (+1.65V) input terminal
12	FMo	O	Sled motor drive signal output terminal
13	DMo	O	Spindle motor drive signal output terminal
14	VSSP3	-	Ground terminal
15	VCOi	I	VCO control voltage input terminal
16	VDDP3	-	Power supply terminal (+3.3V)
17	VDD1	-	Power supply terminal (+1.5V)
18	VSS1	-	Ground terminal
19	FGiN	I	FG signal input terminal Not used
20	IO0 (/HSO)	I	Disc inner position detection signal input terminal
21	IO1 (/UHSO)	O	Not used
22	XVSS3	-	Ground terminal
23	XI	I	System clock input terminal (16.9344 MHz)
24	XO	O	System clock output terminal (16.9344 MHz)
25	XVDD3	-	Power supply terminal (+3.3V)
26	DVSS3	-	Ground terminal
27	RO	O	Audio data (R-ch) output to the electrical volume
28	DVDD3	-	Power supply terminal (+3.3V)
29	DVR	O	Reference voltage (+1.65V) output terminal
30	LO	O	Audio data (L-ch) output to the electrical volume
31	DVSS3	-	Ground terminal
32	VDDT3	-	Power supply terminal (+3.3V)
33	VSS1	-	Ground terminal
34	VDD1	-	Power supply terminal (+1.5V)
35	VDDM1	-	Power supply terminal (+1.5V)
36	SRAMSTB	I	S-RAM standby mode control signal input terminal Fixed at “L” in this set
37	XRST	I	Reset signal input from the system controller “L”: reset
38, 39	BUS0, BUS1	I	Serial data input from the system controller
40	BUS2 (SO)	I	Serial data input from the system controller
41	BUS3 (SI)	I	Serial data input from the system controller
42	BUCK (CLK)	I	Serial data transfer clock signal input from the system controller
43	XCCE	I	Chip enable signal input from the system controller
44	TEST	I	Setting terminal for test mode Normally fixed at “L”
45	IRQ	I	Interrupt request signal input terminal Not used
46	AoUT3 (PO4)	O	Request signal output terminal Not used
47	AoUT2 (PO5)	O	Audio data output terminal Not used
48	PIO0	O	Request signal output to the system controller
49, 50	PIO1, PIO2	O	Not used
51	PIO3	I	Gate signal input terminal Not used
52	VSS1	-	Ground terminal
53	VDDT3	-	Power supply terminal (+3.3V)
54	SBSY	O	Subcode block sync signal output to the system controller
55	SBOK/FOK	O	Not used

Pin No.	Pin Name	I/O	Description
56	IPF	O	Not used
57	SFSY/LOCK	O	Not used
58	ZDET	O	Zero detection signal output terminal Not used
59	GPIN	I	Not used
60	MS	I	Microcomputer interface mode selection signal input terminal Fixed at “H” in this set
61	DOUT (PO6)	O	Digital audio data output terminal Not used
62	AOUT1 (PO7)	O	Audio data output terminal Not used
63	BCK (PO8)	O	Bit clock signal output terminal Not used
64	LRCK (PO9)	O	L/R sampling clock signal output terminal Not used
65	AIN (PI4)	I	Digital audio data input terminal Not used
66	BCKi (PI5)	I	Bit clock signal input terminal Not used
67	LRCKi (PI6)	I	L/R sampling clock signal input terminal Not used
68	VDD1	-	Power supply terminal (+1.5V)
69	VSS1	-	Ground terminal
70	AWRC	-	Not used
71	PVDD3	-	Power supply terminal (+3.3V)
72	PDo	O	Phase error margin signal between EFM signal and PLCK signal output terminal
73	TMAXS	O	TMAX detection signal output terminal Not used
74	TMAX	O	TMAX detection signal output terminal
75	LPFN	I	Inverted signal input from the operation amplifier for PLL loop filter
76	LPFo	O	Signal output from the operation amplifier for PLL loop filter
77	PVREF	I	Reference voltage (+1.65V) input terminal
78	VCOF	O	VCO filter output terminal
79	PVSS3	-	Ground terminal
80	SLCo	O	EFM slice level output terminal
81	RFi	I	RF signal input terminal
82	RFRPi	I	RF ripple signal input terminal
83	RFEQo	O	EFM slice level output terminal
84	VRo	O	Reference voltage (+1.65V) output terminal
85	RESiN	O	External resistor connection terminal
86	VMDiR	O	Reference voltage (+1.65V) output terminal for automatic power control circuit
87	TESTR	O	Low-pass filter terminal for RFEQO offset correction
88	AGCi	I	RF signal amplitude adjustment amplification input terminal
89	RFo	O	RF signal generation amplification output terminal
90	RVDD3	-	Power supply terminal (+3.3V)
91	LDo	O	Laser diode on/off control signal output to the automatic power control circuit “H”: laser diode on
92	MDi	I	Light amount monitor input from the laser diode of optical pick-up block
93	RVSS3	-	Ground terminal
94	FNi2 (C)	I	Main beam (C) input from the optical pick-up block
95	FNi1 (A)	I	Main beam (A) input from the optical pick-up block
96	FPi2 (D)	I	Main beam (D) input from the optical pick-up block
97	FPi1 (B)	I	Main beam (B) input from the optical pick-up block
98	TPi (F)	I	Sub beam (F) input from the optical pick-up block
99	TNPC	O	External capacitor connection terminal
100	TNi (E)	I	Sub beam (E) input from the optical pick-up block

PANEL BOARD IC301 MB90F830PF-GE1 (SYSTEM CONTROLLER)

Pin No.	Pin Name	I/O	Description
1	SEG32	O	Segment drive signal output to the liquid crystal display
2	O-SP-RELAY-ON/ TC ON/SW ON	O	Relay drive signal output terminal (for speaker), and subwoofer function on/off control signal output terminal (EC99i)
3	O-POWER	O	Main power on/off control signal output terminal "H": main power on
4	O-CD-ON	O	CD power on/off control signal output terminal "H": CD power on
5	I-CDM-CLOSE	I	Detection switch input from the CD mechanism section (EC79i: UK, Australian/EC99i)
6	NC	-	Not used
7	I-CDM-OPEN/ CDM-OPEN_CLOSE	I	Detection switch input from the CD lid opn/close detect switch (EC69i/EC79i: US, Canadian models), or Detection switch input from the CD mechanism section (EC79i: UK, Australian/ EC99i)
8	O-CDM-M+/NC	O	Motor drive signal output terminal (EC79i: UK, Australian/EC99i)
9	I-RMC	I	Remote control signal input from the remote control receiver
10	O-CDM-M-/NC	O	Motor drive signal output terminal (EC79i: UK, Australian/EC99i)
11	5V-ON	O	VBUS power supply on/off control signal output terminal
12	NC	-	Not used
13	X0A	I	Sub system clock input terminal (32.768 kHz)
14	X1A	O	Sub system clock output terminal (32.768 kHz)
15	VCC	-	Power supply terminal (+3.3V)
16	VSS	-	Ground terminal
17 to 20	I/O-CD-BUS0 to I/O-CD-BUS3	O	Serial data output to the CD-MP3 processor
21, 22	NC	-	Not used
23	O-DR-MUTE	O	Motor drive on/off control signal output to the motor/coil driver
24	I-REQ	I	Request signal input from the CD-MP3 processor
25	O-CD-BUCK	O	Serial data transfer clock signal output to the CD-MP3 processor
26	O-CD-CCE	O	Chip enable signal output to the CD-MP3 processor
27	O-CD-RST	O	System reset signal output to the CD-MP3 processor "L": reset
28	O-LED	O	LED drive signal output terminal for standby indicator
29	I-iPod-TXD	I	Serial data input from the iPod connector
30	SCLK	-	Not used
31	O-iPod-RXD	O	Serial data output to the iPod connector
32	AVCC	-	Power supply terminal (+3.3V)
33	O-AUDIO-DATA	O	Serial data output to the electrical volume
34	O-AUDIO-CLK	O	Serial data transfer clock signal output to the electrical volume
35	AVSS	-	Ground terminal
36	I-P-MONI	I	Power monitor signal input terminal
37, 38	I-KEY1, I-KEY2	I	Front panel key input terminal (A/D input)
39	I-TU-ANSD	I	Auto gain control signal input terminal
40	I-5V/9V-DET	I	Power supply voltage detection signal input terminal
41	I-KEY-WAKE-UP/VOL	I	Front panel key input terminal (A/D input)
42	I-HOLD	I	Hold signal input terminal
43	O-CD-SBSY	I	Subcode block sync signal input from the CD-MP3 processor
44	GND	-	Ground terminal
45	I-iPod-DET	I	iPod detection signal input terminal
46	I-MODEL	I	Model setting terminal
47	I-SUFFIX	I	Suffix setting terminal
48	I-TU-DO	I	Serial data input from the AM/FM DET
49, 50	NC	-	Not used
51 to 53	MD2 to MD0	-	Not used
54	I-RST	I	Reset signal input from the reset switch "L": reset
55	O-TU-CE	O	Chip enable signal output to the AM/FM DET
56	O-TU-DI	O	Serial data output to the AM/FM DET
57	O-TU-CLK	O	Serial data transfer clock signal output to the AM/FM DET
58	VLCD	-	Terminal for doubler circuit capacitor connection to develop liquid crystal display drive voltage

Pin No.	Pin Name	I/O	Description
59 to 62	COM0, COM1, CMO2, CMO3	O	Common drive signal output to the liquid crystal display
63, 64	SEG0, SEG1	O	Segment drive signal output to the liquid crystal display
65	VCC	-	Power supply terminal (+3.3V)
66	VSS	-	Ground terminal
67 to 89	SEG2 to SEG24	O	Segment drive signal output to the liquid crystal display
90	VCC	-	Power supply terminal (+3.3V)
91	VSS	-	Ground terminal
92	X1	I	Main system clock output terminal (6 MHz)
93	X0	O	Main system clock input terminal (6 MHz)
94 to 100	SEG25 to SEG31	O	Segment drive signal output to the liquid crystal display

SECTION 7
EXPLODED VIEWS

Note:
- -XX and -X mean standardized parts, so they may have some difference from the original one.
- Items marked "*" are not stocked since they are seldom required for routine service. Some delay should be anticipated when ordering these items.
- The mechanical parts with no reference number in the exploded views are not supplied.
- Color Indication of Appearance Parts Example:
  KNOB, BALANCE (WHITE) . . . (RED)
  ↑ Parts Color ↑ Cabinet's Color
- Abbreviation
  AUS : Australian model
  CND : Canadian model

The components identified by mark ⚠ or dotted line with mark ⚠ are critical for safety.
Replace only with part number specified.

Les composants identifiés par une marque ⚠ sont critiques pour la sécurité.
Ne les remplacer que par une pièce portant le numéro spécifié.

7-1. OVERALL SECTION (HCD-EC69i)

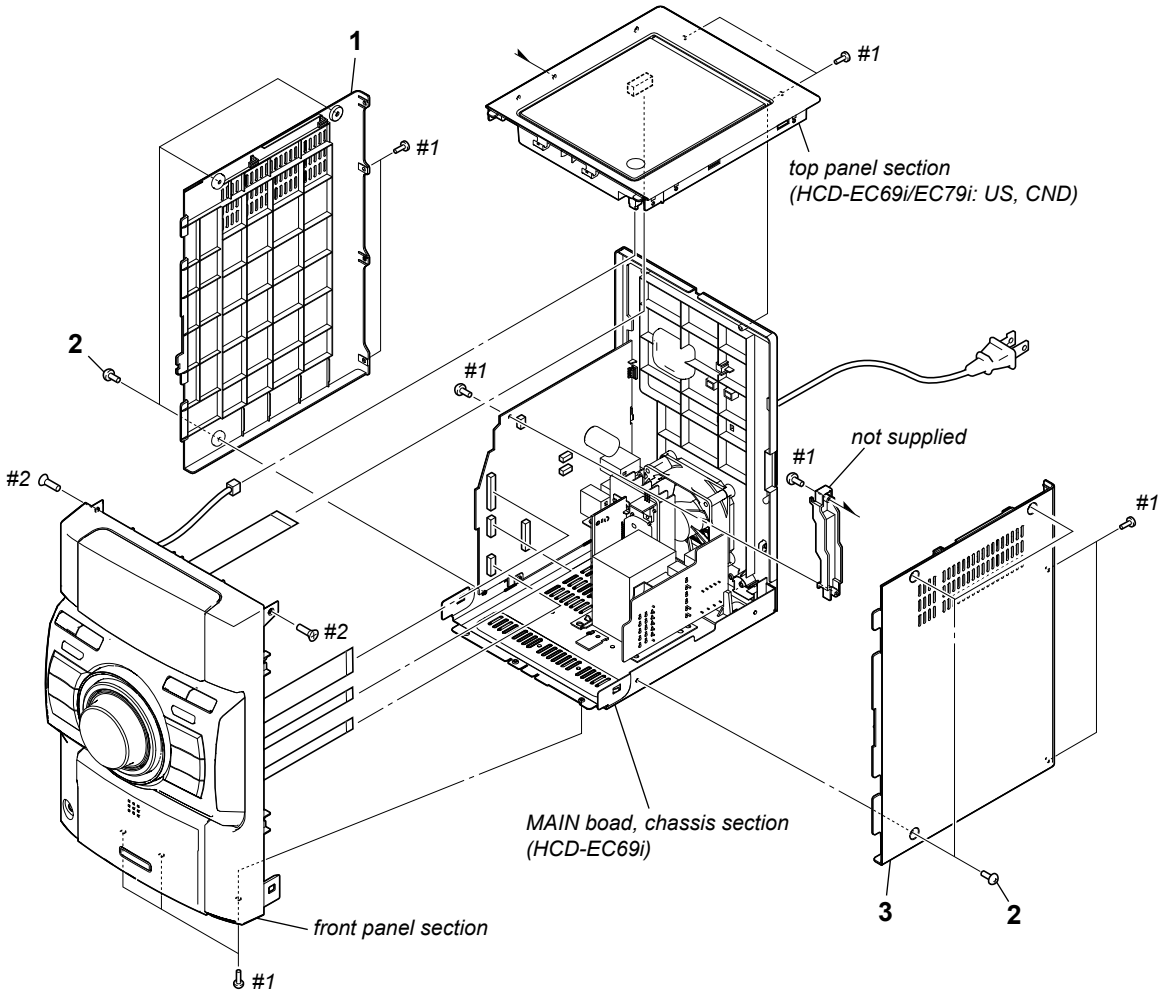

Ref. No.	Part No.	Description	Remark
1	4-120-682-02	PANEL (L), SIDE (US, CND)	
1	4-120-682-12	PANEL (L), SIDE (UK, AUS)	
2	3-363-099-32	SCREW (CASE 3 TP2)	
3	4-120-683-02	PANEL (R), SIDE (US, CND)	
3	4-120-683-12	PANEL (R), SIDE (UK, AUS)	
#1	7-685-647-79	SCREW +BVTP 3X10 TYPE2 N-S	
#2	7-685-247-14	SCREW +KTP 3X10 TYPE2 NON-SLIT	

7-2. OVERALL SECTION (HCD-EC79i/EC99i)

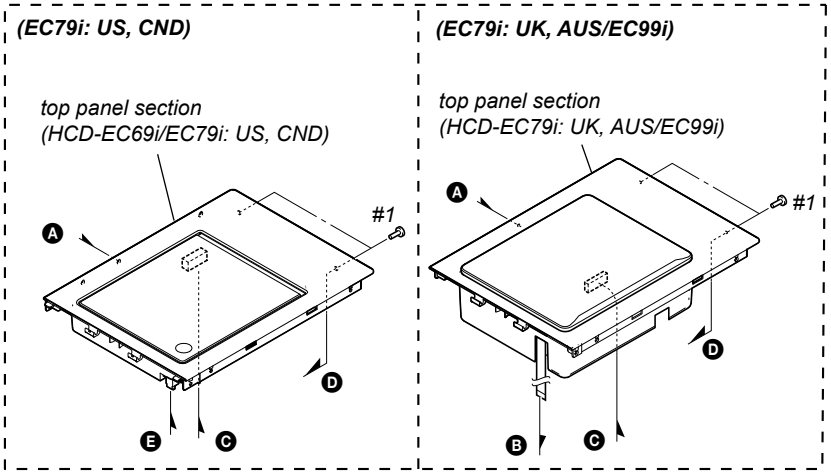

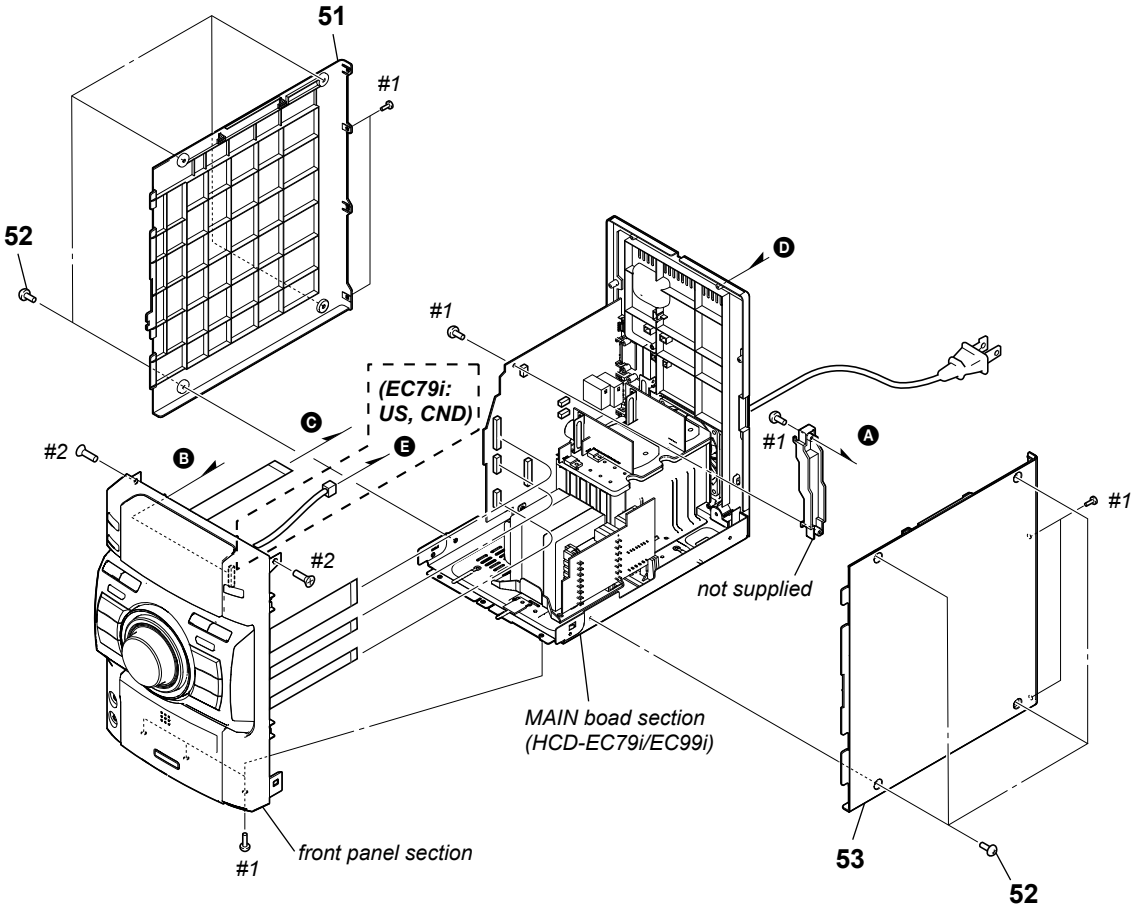

Ref. No.	Part No.	Description	Remark
51	2-890-831-01	PANEL (L), SIDE (US, CND)	
51	2-890-831-11	PANEL (L), SIDE (UK, AUS)	
52	3-363-099-32	SCREW (CASE 3 TP2)	
53	2-890-830-01	PANEL (R), SIDE (US, CND)	
53	2-890-830-11	PANEL (R), SIDE (UK, AUS)	
#1	7-685-647-79	SCREW +BVTP 3X10 TYPE2 N-S	
#2	7-685-247-14	SCREW +KTP 3X10 TYPE2 NON-SLIT	

7-3. TOP PANEL SECTION (HCD-EC69i/EC79i: US, CND)

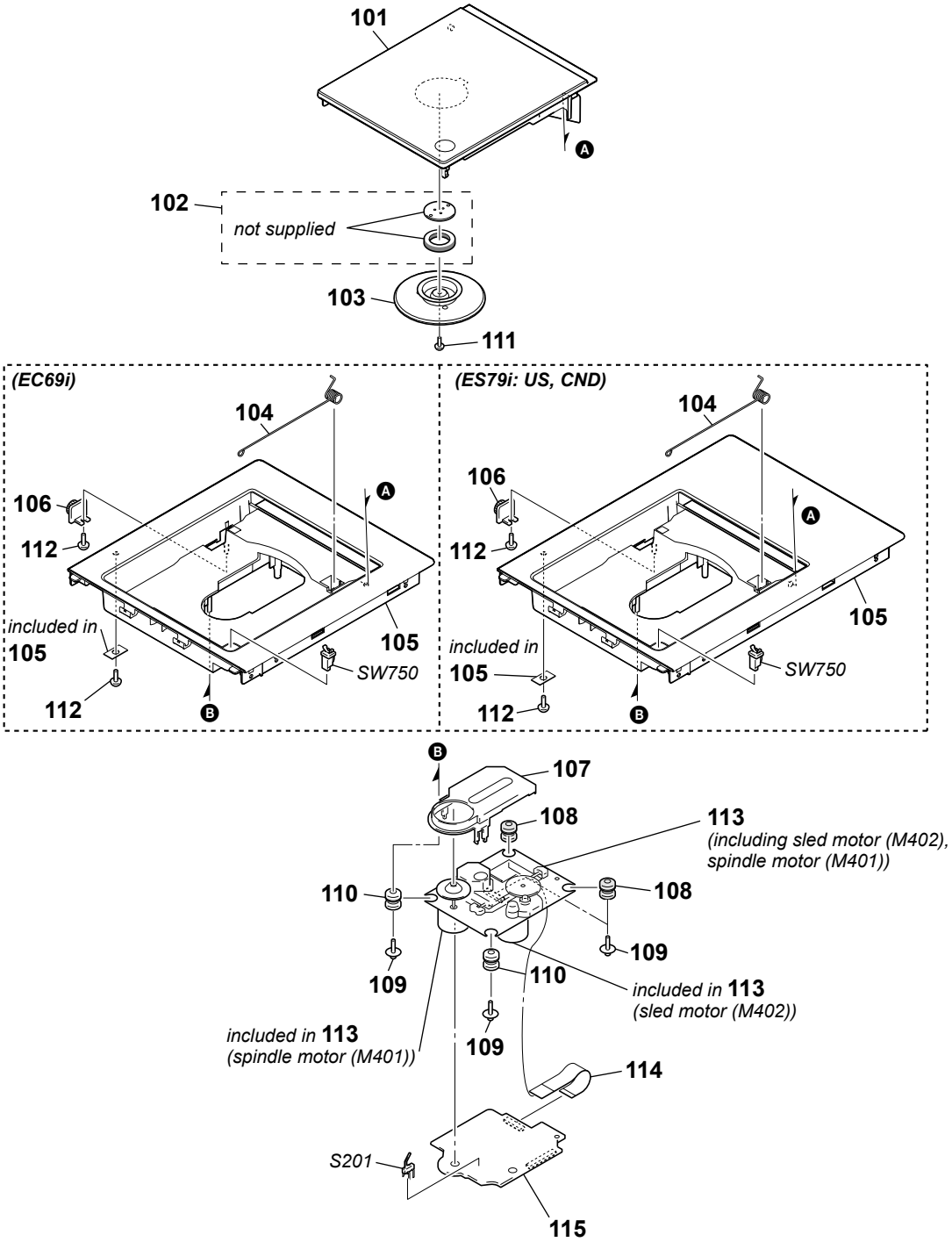

Ref. No.	Part No.	Description	Remark
101	4-120-740-02	LID (CD)	
102	1-452-899-11	MAGNET	
103	3-019-395-01	PLATE, CHUCKING	
104	4-145-341-01	SPRING (LID)	
105	4-120-739-01	PANEL, TOP (EC69i: US, CND)	
105	4-120-739-11	PANEL, TOP (EC69i: UK, AUS)	
105	4-136-037-01	PANEL, TOP (1) (EC79i: US, CND)	
106	3-047-468-11	DAMPER	
107	4-247-493-01	COVER, CD	
108	3-931-379-21	RUBBER, VIBRATION PROOF (RED)	
109	4-985-672-01	SCREW (+PTPWHM2.6), FLOATING	
110	3-931-379-31	RUBBER, VIBRATION PROOF (GREEN)	
111	3-253-143-01	SCREW (B2.6), (+) P TAPPING	
112	3-087-053-01	+BVTP2.6 (3CR)	
⚠ 113	8-820-126-02	OPTICAL PICK-UP BLOCK (KSM-213CDP/C2NP)	
114	1-834-268-21	WIRE (FLAT TYPE) (16 CORE)	
115	A-1217-914-A	CD BOARD, COMPLETE	
S201	1-771-853-11	SWITCH, DETECTION (LIMIT)	
SW750	1-692-960-11	SWITCH, PUSH (1 KEY) (CD LID OPEN/ CLOSE DETECT)	

7-4. TOP PANEL SECTION (HCD-EC79i: UK, AUS/EC99i)

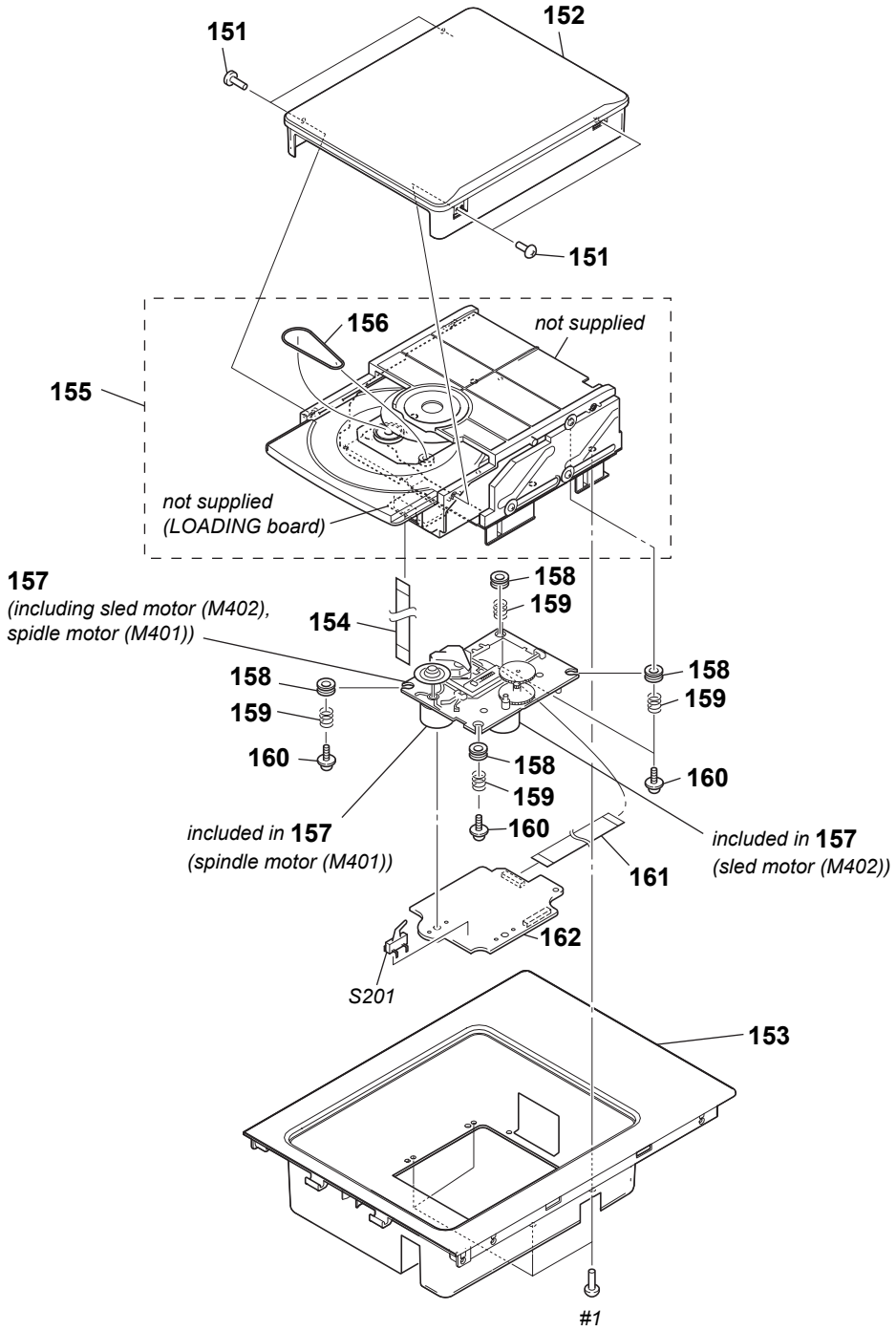

Ref. No.	Part No.	Description	Remark
151	3-253-143-01	SCREW (B2.6), (+) P TAPPING	
152	4-120-662-01	LID, TOP	
153	4-120-661-01	PANEL, TOP (LOADING) (EC99i: US, CND)	
153	4-120-661-11	PANEL, TOP (LOADING) (EC79i: UK, AUS/EC99i: UK, AUS)	
154	1-836-761-21	CABLE, FLEXIBLE FLAT (5 CORE) (EC79i: UK, AUS/EC99i)	
155	A-1579-622-A	CDM76A ASSY	
156	4-120-079-01	BELT (CDM76)	
⚠ 157	A-4735-357-A	BASE ASSY, OP (KSM-213D)	
158	4-227-549-11	INSULATOR	
159	4-227-045-31	SPRING (INSULATOR), COIL	
160	4-985-672-01	SCREW (+PTPWHM2.6), FLOATING	
161	1-832-404-21	CABLE, FLEXIBLE FLAT (16 CORE)	
162	A-1217-914-A	CD BOARD, COMPLETE	
S201	1-771-853-11	SWITCH, DETECTION (LIMIT)	
#1	7-685-647-79	SCREW +BVTP 3X10 TYPE2 N-S	

7-5. FRONT PANEL SECTION

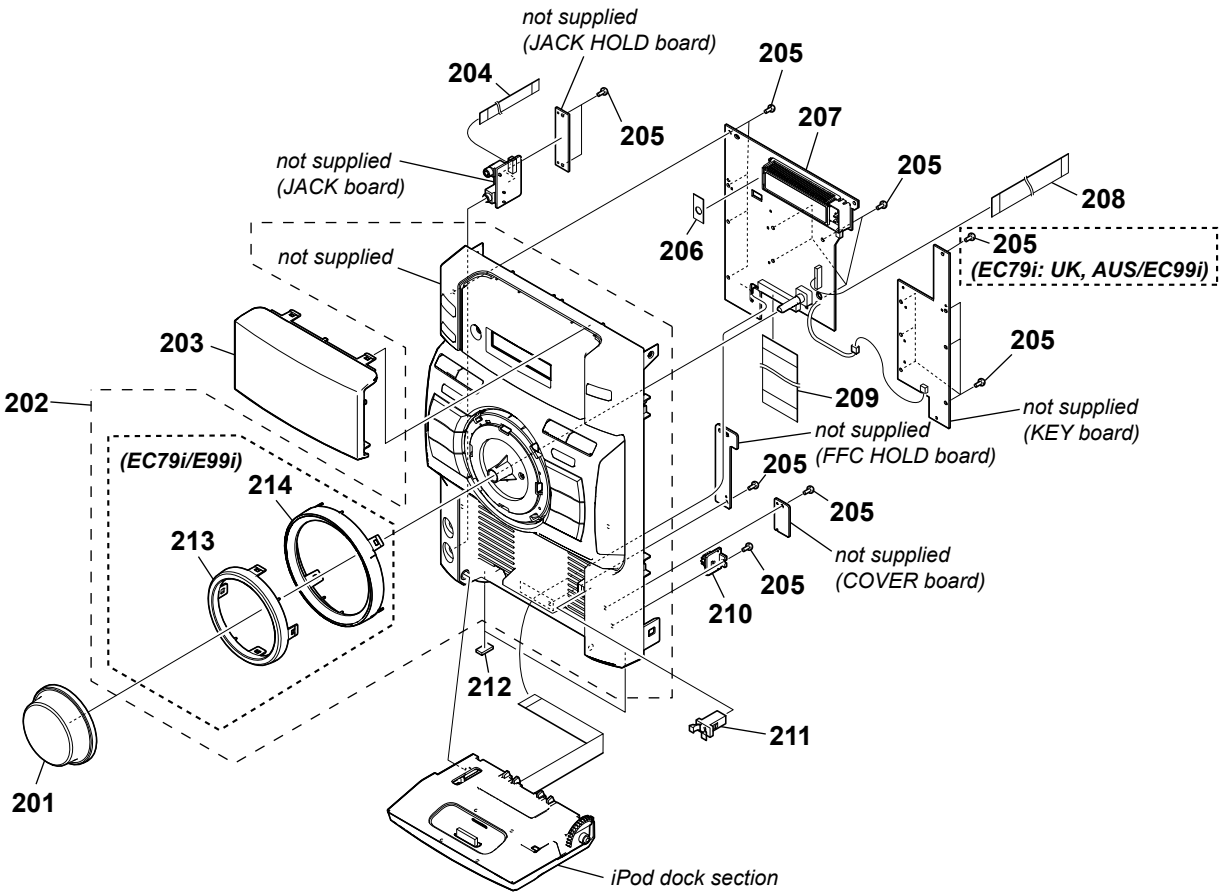

Ref. No.	Part No.	Description	Remark
201	4-120-663-01	KNOB (VOL)	
202	A-1616-644-A	PANEL ASSY, FRONT (EC99i: US, CND)	
202	A-1616-645-A	PANEL ASSY, FRONT (EC99i: AUS)	
202	A-1616-646-A	PANEL ASSY, FRONT (EC79i: US, CND)	
202	A-1616-647-A	PANEL ASSY, FRONT (EC79i: UK)	
202	A-1616-648-A	PANEL ASSY, FRONT (EC79i: AUS)	
202	A-1616-649-A	PANEL ASSY, FRONT (EC69i: US, CND)	
202	A-1616-650-A	PANEL ASSY, FRONT (EC69i: UK)	
202	A-1616-651-A	PANEL ASSY, FRONT (EC69i: AUS)	
202	A-1731-504-A	PANEL ASSY, FRONT (EC99i: UK)	
203	4-120-650-01	WINDOW (EC99i: US, CND, AUS)	
203	4-120-650-11	WINDOW (EC79i: UK)	
203	4-120-650-21	WINDOW (EC79i: US, CND, AUS)	
203	4-120-650-31	WINDOW (EC69i: UK)	
203	4-120-650-41	WINDOW (EC69i: US, CND, AUS)	
203	4-120-650-51	WINDOW (EC99i: UK)	
204	1-832-804-21	CABLE, FLEXIBLE FLAT (7 CORE) (EC69i)	
204	1-832-815-21	CABLE, FLEXIBLE FLAT (9 CORE) (EC79i/EC99i)	
205	3-087-053-01	+BVTP2.6 (3CR)	
206	3-297-298-01	SHEET (RM)	

Ref. No.	Part No.	Description	Remark
207	A-1599-065-A	PANEL BOARD, COMPLETE (EC99i: US, CND)	
207	A-1599-078-A	PANEL BOARD, COMPLETE (EC99i: AUS)	
207	A-1599-084-A	PANEL BOARD, COMPLETE (EC79i: US, CND)	
207	A-1599-090-A	PANEL BOARD, COMPLETE (EC79i: UK)	
207	A-1599-094-A	PANEL BOARD, COMPLETE (EC79i: AUS)	
207	A-1599-116-A	PANEL BOARD, COMPLETE (EC69i: US, CND)	
207	A-1599-133-A	PANEL BOARD, COMPLETE (EC69i: UK)	
207	A-1599-136-A	PANEL BOARD, COMPLETE (EC69i: AUS)	
207	A-1731-204-A	PANEL BOARD, COMPLETE (EC99i: UK)	
208	1-836-760-21	CABLE, FLEXIBLE FLAT (21 CORE) (EC69i/ EC79i: US, CND)	
208	1-836-762-21	CABLE, FLEXIBLE FLAT (21 CORE) (EC79i: UK, AUS/EC99i)	
209	1-832-896-21	CABLE, FLEXIBLE FLAT (25 CORE) (EC69i)	
209	1-832-897-21	CABLE, FLEXIBLE FLAT (25 CORE) (EC79i/EC99i)	
210	3-047-468-62	DAMPER	
211	3-876-249-01	LATCH	
212	4-225-252-01	CUSHION (FOOT)	
213	4-120-658-01	RING (VOL) (EC79i/EC99i)	
214	4-120-657-01	RING, ORNAMENT (EC79i/EC99i)	

7-6. iPod DOCK SECTION

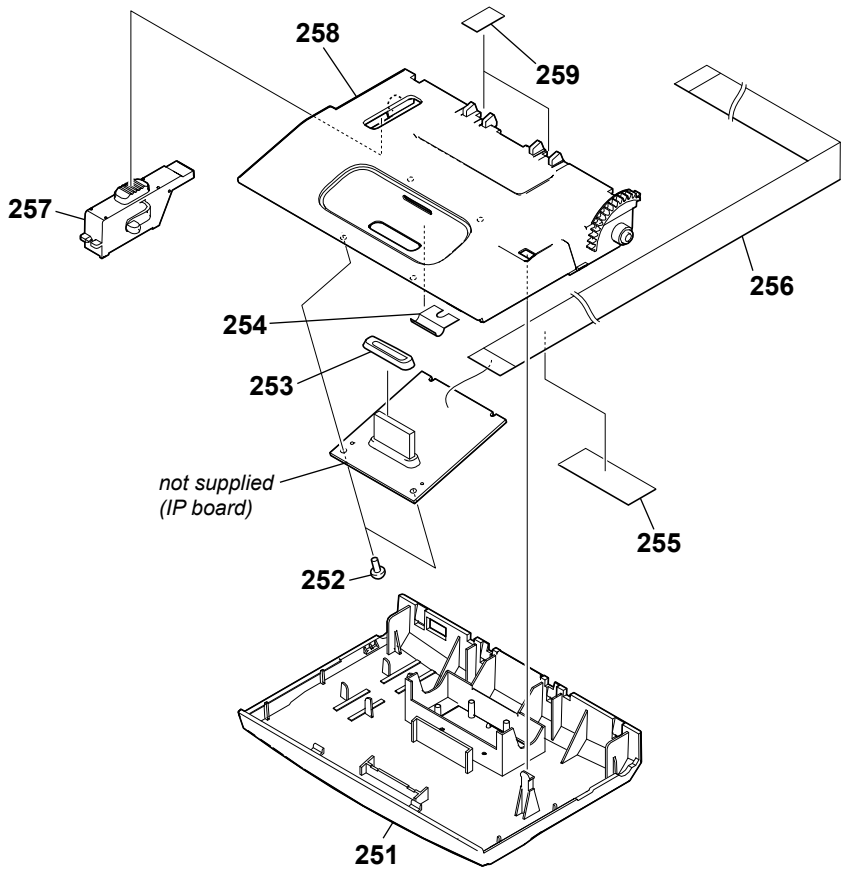

Ref. No.	Part No.	Description	Remark
251	X-2348-584-1	IPOD ASSY (EC79i/EC99i)	
251	4-120-664-01	PLATE, ORNAMENT (DOCK) (EC69i)	
252	3-253-143-01	SCREW (B2.6), (+) P TAPPING	
253	3-277-576-01	ESCUTCHEON	
254	3-277-577-01	SPRING	
255	4-127-709-01	SHEET	
256	1-836-763-21	CABLE, FLEXIBLE FLAT (11 CORE) (EC79i/EC99i)	
256	1-836-766-21	CABLE, FLEXIBLE FLAT (11 CORE) (EC69i)	
257	4-120-666-01	LOCK (DOCK)	
258	4-120-665-01	BASE (DOCK)	
259	4-127-708-01	SHEET	

7-7. MAIN BOARD, CHASSIS SECTION (HCD-EC69i)

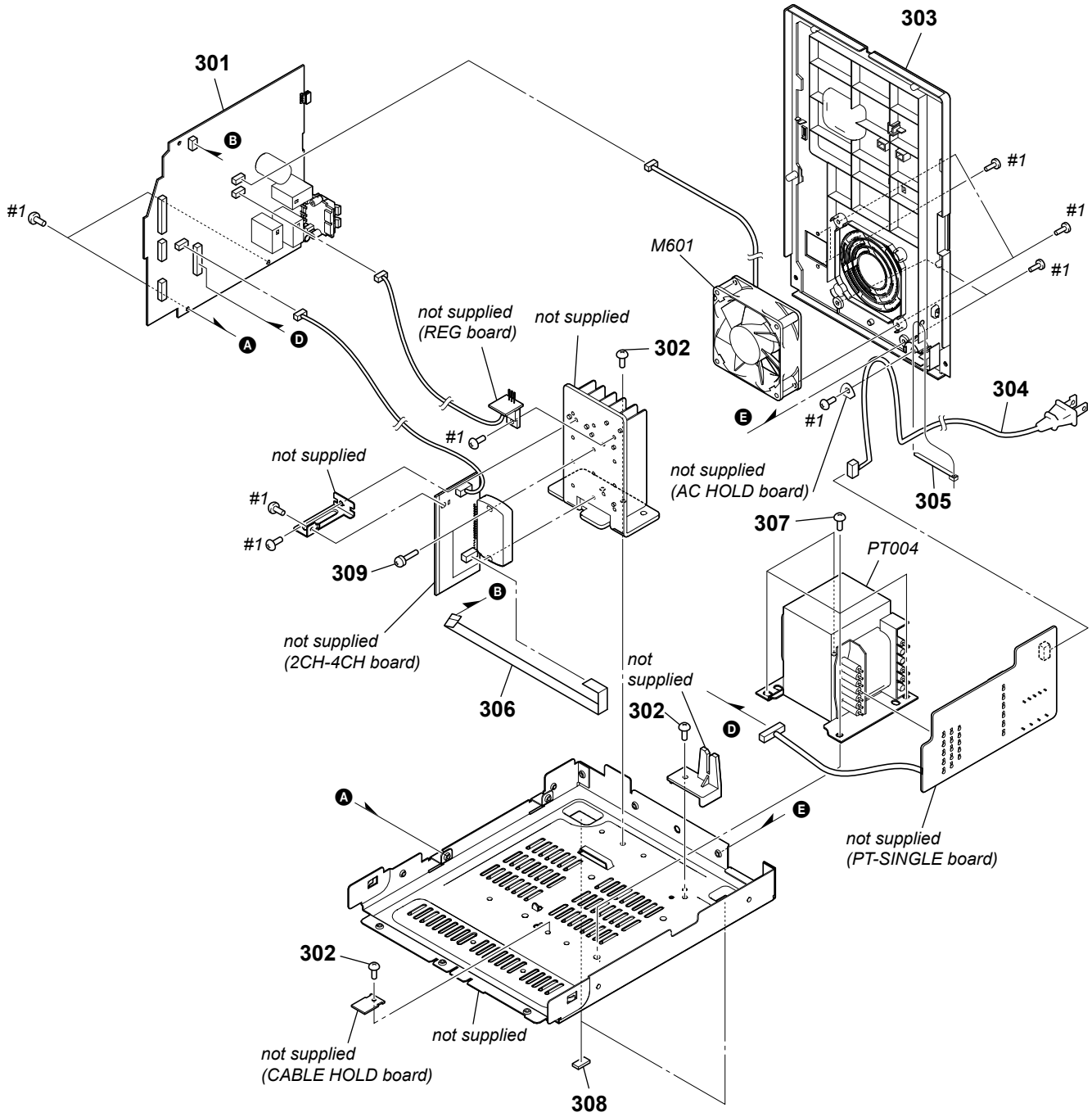

Ref. No.	Part No.	Description	Remark
301	A-1599-114-A	MAIN BOARD, COMPLETE (EC69i: US, CND)	
301	A-1599-131-A	MAIN BOARD, COMPLETE (EC69i: UK, AUS)	
302	3-077-331-01	+BV3 (3-CR)	
303	4-120-681-02	PANEL, BACK (EC69i: US)	
303	4-120-681-12	PANEL, BACK (EC69i: UK, AUS)	
303	4-120-681-22	PANEL, BACK (EC69i: CND)	
⚠ 304	1-834-965-22	CORD, POWER (US, CND)	
⚠ 304	1-834-966-41	POWER-SUPPLY CORD (UK)	
⚠ 304	1-834-967-21	CORD, POWER (AUS)	
305	3-701-748-00	CLAMP	

Ref. No.	Part No.	Description	Remark
306	1-831-744-21	CABLE, FLEXIBLE FLAT (5 CORE)	
307	4-900-386-01	SCREW	
308	4-225-252-01	CUSHION (FOOT)	
309	3-905-609-31	SCREW (TRANSISTOR)	
M601	1-787-319-12	FAN, DC (EC69i)	
⚠ PT004	1-445-562-11	TRANSFORMER, POWER (EC69i: UK)	
⚠ PT004	1-445-564-11	TRANSFORMER, POWER (EC69i: US, CND)	
⚠ PT004	1-445-574-11	TRANSFORMER, POWER (EC69i: AUS)	
#1	7-685-647-79	SCREW +BVTP 3X10 TYPE2 N-S	

7-8. MAIN BOARD SECTION (HCD-EC79i/EC99i)

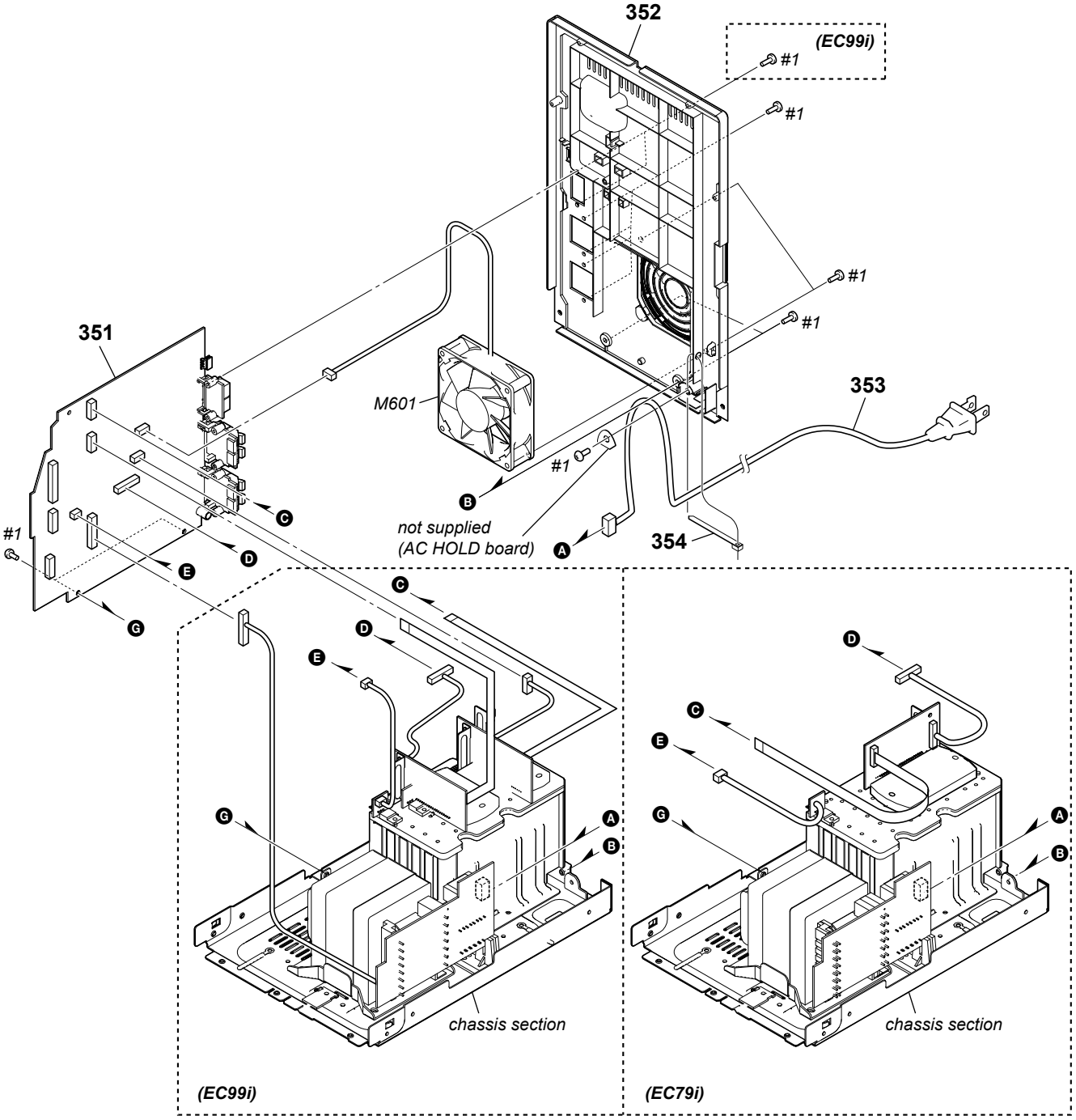

Ref. No.	Part No.	Description	Remark
351	A-1599-061-A	MAIN BOARD, COMPLETE (EC99i: US, CND)	
351	A-1599-076-A	MAIN BOARD, COMPLETE (EC99i: UK, AUS)	
351	A-1599-082-A	MAIN BOARD, COMPLETE (EC79i: US, CND)	
351	A-1599-088-A	MAIN BOARD, COMPLETE (EC79i: UK, AUS)	
352	4-124-521-02	PANEL, BACK (EC99i: US)	
352	4-124-521-12	PANEL, BACK (EC99i: UK, AUS)	
352	4-124-521-22	PANEL, BACK (EC79i: US)	
352	4-124-521-32	PANEL, BACK (EC79i: UK, AUS)	
352	4-124-521-42	PANEL, BACK (EC99i: CND)	

Ref. No.	Part No.	Description	Remark
352	4-124-521-52	PANEL, BACK (EC79i: CND)	
⚠ 353	1-834-965-22	CORD, POWER (US, CND)	
⚠ 353	1-834-966-41	POWER-SUPPLY CORD (UK)	
⚠ 353	1-834-967-21	CORD, POWER (AUS)	
354	3-701-748-00	CLAMP (EC79i/EC99i: US, CND, AUS)	
354	4-147-421-01	HOLDER WIRE (EC99i: UK)	
M601	1-787-344-11	FAN, DC (EC79i/EC99i)	
#1	7-685-647-79	SCREW +BVTP 3X10 TYPE2 N-S	

7-9. CHASSIS SECTION (HCD-EC79i/EC99i)

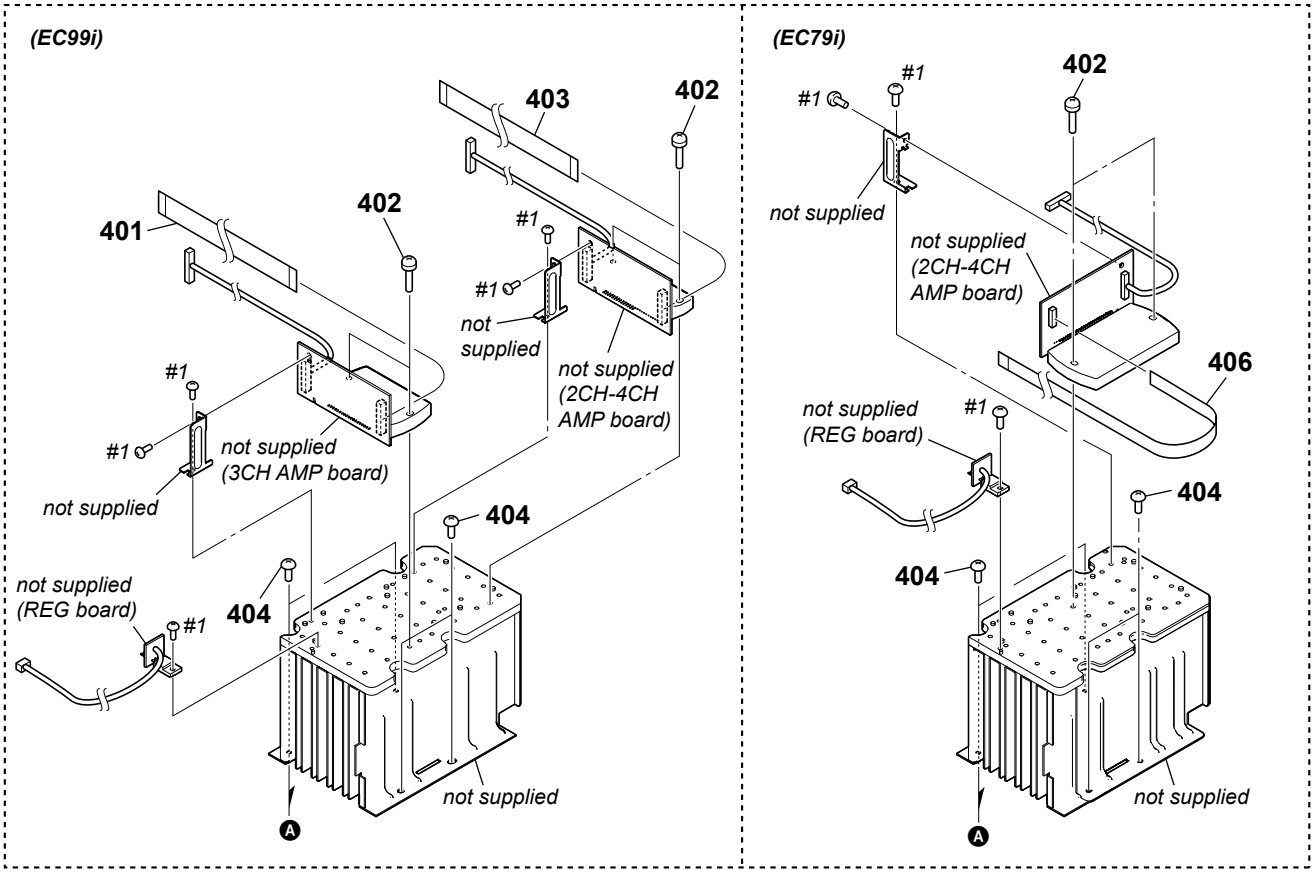

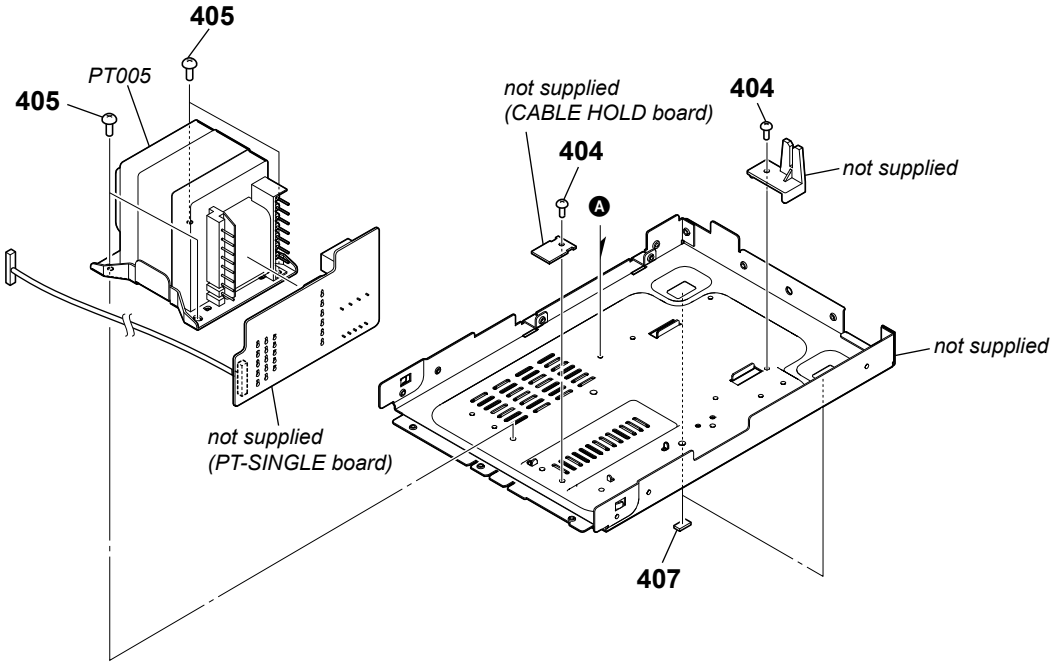

Ref. No.	Part No.	Description	Remark
401	1-832-806-21	CABLE, FLEXIBLE FLAT (7 CORE) (EC99i)	
402	3-905-609-31	SCREW (TRANSISTOR)	
403	1-831-744-21	CABLE, FLEXIBLE FLAT (5 CORE) (EC99i)	
404	3-077-331-01	+BV3 (3-CR)	
405	4-900-386-01	SCREW	
406	1-832-795-21	CABLE, FLEXIBLE FLAT (5 CORE) (EC79i)	
407	4-225-252-01	CUSHION (FOOT)	

Ref. No.	Part No.	Description	Remark
⚠ PT005	1-445-565-11	TRANSFORMER, POWER (EC79i: US, CND/ EC99i: US, CND)	
⚠ PT005	1-445-566-11	TRANSFORMER, POWER (EC79i: UK/EC99i: UK)	
⚠ PT005	1-445-569-11	TRANSFORMER, POWER (EC79i: AUS/EC99i: AUS)	
#1	7-685-647-79	SCREW +BVTP 3X10 TYPE2 N-S	

SECTION 8
ELECTRICAL PARTS LIST

2CH-4CH AMP

Note:

- Due to standardization, replacements in the parts list may be different from the parts specified in the diagrams or the components used on the set.
- -XX and -X mean standardized parts, so they may have some difference from the original one.
- Items marked "*" are not stocked since they are seldom required for routine service. Some delay should be anticipated when ordering these items.
- RESISTORS
  All resistors are in ohms.
  METAL: Metal-film resistor.
  METAL OXIDE: Metal oxide-film resistor.
  F: nonflammable
- CAPACITORS
  uF: μF
- COILS
  uH: μH
- SEMICONDUCTORS
  In each case, u: μ, for example:
  uA. . : μA. . , uPA. . , μPA. . ,
  uPB. . : μPB. . , uPC. . , μPC. . ,
  uPD. . : μPD. .
- Abbreviation
  AUS : Australian model
  CND : Canadian model

When indicating parts by reference number, please include the board name.

The components identified by mark ⚠ or dotted line with mark ⚠ are critical for safety.
Replace only with part number specified.

Les composants identifiés par une marque ⚠ sont critiques pour la sécurité.
Ne les remplacer que par une pièce portant le numéro spécifié.

Ref. No.	Part No.	Description			Remark
		2CH-4CH AMP BOARD			
		**********			
		< CAPACITOR >			
C101	1-126-960-11	ELECT	1uF	20%	50V
C102	1-126-960-11	ELECT	1uF	20%	50V
C103	1-164-315-11	CERAMIC CHIP	470PF	5%	50V
C104	1-164-315-11	CERAMIC CHIP	470PF	5%	50V
C105	1-162-927-11	CERAMIC CHIP	100PF	5%	50V
C106	1-162-927-11	CERAMIC CHIP	100PF	5%	50V
C107	1-162-908-11	CERAMIC CHIP	3PF	0.25PF	50V
C108	1-162-908-11	CERAMIC CHIP	3PF	0.25PF	50V
C109	1-126-947-11	ELECT	47uF	20%	35V
C110	1-126-947-11	ELECT	47uF	20%	35V
C111	1-162-968-11	CERAMIC CHIP	0.0047uF	10%	50V
C112	1-100-566-91	CERAMIC CHIP	0.1uF	10%	25V
C119	1-162-970-11	CERAMIC CHIP	0.01uF	10%	25V (EC79i)
C120	1-162-970-11	CERAMIC CHIP	0.01uF	10%	25V (EC79i)
C121	1-126-960-11	ELECT	1uF	20%	50V (EC79i)
C122	1-126-960-11	ELECT	1uF	20%	50V (EC79i)
C123	1-164-315-11	CERAMIC CHIP	470PF	5%	50V (EC79i)
C124	1-164-315-11	CERAMIC CHIP	470PF	5%	50V (EC79i)
C125	1-162-927-11	CERAMIC CHIP	100PF	5%	50V (EC79i)
C126	1-162-927-11	CERAMIC CHIP	100PF	5%	50V (EC79i)
C127	1-162-908-11	CERAMIC CHIP	3PF	0.25PF	50V (EC79i)
C128	1-162-908-11	CERAMIC CHIP	3PF	0.25PF	50V (EC79i)
C129	1-126-960-11	ELECT	1uF	20%	50V (EC79i)
C130	1-126-960-11	ELECT	1uF	20%	50V (EC79i)
C141	1-100-566-91	CERAMIC CHIP	0.1uF	10%	25V
C142	1-100-566-91	CERAMIC CHIP	0.1uF	10%	25V
C151	1-100-566-91	CERAMIC CHIP	0.1uF	10%	25V (EC79i)
C152	1-100-566-91	CERAMIC CHIP	0.1uF	10%	25V (EC79i)
C160	1-165-621-91	CERAMIC CHIP	0.1uF		50V
C161	1-165-621-91	CERAMIC CHIP	0.1uF		50V
C162	1-126-968-11	ELECT	100uF	20%	50V (EC69i)
C162	1-128-553-11	ELECT	220uF	20%	63V (EC79i)
C162	1-128-576-11	ELECT	100uF	20%	63V (EC99i)
C163	1-126-968-11	ELECT	100uF	20%	50V (EC69i)
C163	1-128-553-11	ELECT	220uF	20%	63V (EC79i)
C163	1-128-576-11	ELECT	100uF	20%	63V (EC99i)
C164	1-165-621-91	CERAMIC CHIP	0.1uF		50V
C165	1-165-621-91	CERAMIC CHIP	0.1uF		50V
C166	1-128-582-11	ELECT	10uF	20%	100V (EC79i)
C167	1-128-582-11	ELECT	10uF	20%	100V (EC79i)
		< CONNECTOR >			
CN100	1-784-766-11	CONNECTOR, FFC 5P			
CN101	1-820-831-11	HOLDER, CABLE 7P (EC79i)			
CN102	1-824-030-21	HOLDER, CABLE 5P (EC69i/EC99i)			
		< DIODE >			
D140	6-501-817-01	DIODE MA2J1110GLS0			
D141	6-500-335-01	DIODE MC2838-T112-1			
D152	6-500-335-01	DIODE MC2838-T112-1 (EC79i)			
		< IC >			
IC101	6-600-732-01	IC STK433-890-E (EC79i)			
IC102	6-705-625-01	IC STK433-040 (EC69i)			
IC103	6-600-580-01	IC STK433-090-E (EC99i)			
		< JUMPER RESISTOR >			
JR101	1-216-864-11	SHORT CHIP	0		
JR102	1-216-864-11	SHORT CHIP	0		
JR103	1-216-864-11	SHORT CHIP	0		
		< TRANSISTOR >			
Q141	6-551-270-01	TRANSISTOR	2SA2026		
Q142	6-551-270-01	TRANSISTOR	2SA2026		
Q151	6-551-270-01	TRANSISTOR	2SA2026 (EC79i)		
Q152	6-551-270-01	TRANSISTOR	2SA2026 (EC79i)		

2CH-4CH AMP **3CH AMP**

Ref. No.	Part No.	Description			Remark
		< RESISTOR >			
R103	1-216-820-11	METAL CHIP	820	5%	1/10W (EC79i)
R103	1-216-822-11	METAL CHIP	1.2K	5%	1/10W (EC99i)
R103	1-216-825-11	METAL CHIP	2.2K	5%	1/10W (EC69i)
R104	1-216-820-11	METAL CHIP	820	5%	1/10W (EC79i)
R104	1-216-822-11	METAL CHIP	1.2K	5%	1/10W (EC99i)
R104	1-216-825-11	METAL CHIP	2.2K	5%	1/10W (EC69i)
R105	1-216-825-11	METAL CHIP	2.2K	5%	1/10W (EC69i)
R105	1-216-829-11	METAL CHIP	4.7K	5%	1/10W (EC79i/EC99i)
R106	1-216-825-11	METAL CHIP	2.2K	5%	1/10W (EC69i)
R106	1-216-829-11	METAL CHIP	4.7K	5%	1/10W (EC79i/EC99i)
R107	1-216-841-11	METAL CHIP	47K	5%	1/10W
R108	1-216-841-11	METAL CHIP	47K	5%	1/10W
R109	1-216-817-11	METAL CHIP	470	5%	1/10W
R110	1-216-817-11	METAL CHIP	470	5%	1/10W
⚠ R111	1-216-361-31	METAL OXIDE	0.22	5%	2W F
⚠ R112	1-216-361-31	METAL OXIDE	0.22	5%	2W F
R113	1-216-841-11	METAL CHIP	47K	5%	1/10W
R114	1-216-841-11	METAL CHIP	47K	5%	1/10W
R115	1-216-823-11	METAL CHIP	1.5K	5%	1/10W
R116	1-216-823-11	METAL CHIP	1.5K	5%	1/10W
R119	1-216-809-11	METAL CHIP	100	5%	1/10W
R120	1-216-821-11	METAL CHIP	1K	5%	1/10W
R123	1-216-820-11	METAL CHIP	820	5%	1/10W (EC79i)
R124	1-216-820-11	METAL CHIP	820	5%	1/10W (EC79i)
R125	1-216-829-11	METAL CHIP	4.7K	5%	1/10W (EC79i)
R126	1-216-829-11	METAL CHIP	4.7K	5%	1/10W (EC79i)
R127	1-216-841-11	METAL CHIP	47K	5%	1/10W (EC79i)
R128	1-216-841-11	METAL CHIP	47K	5%	1/10W (EC79i)
R129	1-216-817-11	METAL CHIP	470	5%	1/10W (EC79i)
R130	1-216-817-11	METAL CHIP	470	5%	1/10W (EC79i)
⚠ R131	1-216-361-31	METAL OXIDE	0.22	5%	2W F (EC79i)
⚠ R132	1-216-361-31	METAL OXIDE	0.22	5%	2W F (EC79i)
R133	1-216-841-11	METAL CHIP	47K	5%	1/10W (EC79i)
R134	1-216-841-11	METAL CHIP	47K	5%	1/10W (EC79i)
R135	1-216-823-11	METAL CHIP	1.5K	5%	1/10W (EC79i)
R136	1-216-823-11	METAL CHIP	1.5K	5%	1/10W (EC79i)
R141	1-216-822-11	METAL CHIP	1.2K	5%	1/10W
R142	1-216-822-11	METAL CHIP	1.2K	5%	1/10W
R143	1-216-837-11	METAL CHIP	22K	5%	1/10W
R144	1-216-837-11	METAL CHIP	22K	5%	1/10W
R145	1-216-825-11	METAL CHIP	2.2K	5%	1/10W
R146	1-216-825-11	METAL CHIP	2.2K	5%	1/10W
R151	1-216-822-11	METAL CHIP	1.2K	5%	1/10W (EC79i)
R152	1-216-822-11	METAL CHIP	1.2K	5%	1/10W (EC79i)
R153	1-216-837-11	METAL CHIP	22K	5%	1/10W (EC79i)
R154	1-216-837-11	METAL CHIP	22K	5%	1/10W (EC79i)
R155	1-216-825-11	METAL CHIP	2.2K	5%	1/10W (EC79i)
R156	1-216-825-11	METAL CHIP	2.2K	5%	1/10W (EC79i)
R160	1-216-813-11	METAL CHIP	220	5%	1/10W
R161	1-216-813-11	METAL CHIP	220	5%	1/10W
R162	1-216-813-11	METAL CHIP	220	5%	1/10W
R163	1-216-813-11	METAL CHIP	220	5%	1/10W
R164	1-216-813-11	METAL CHIP	220	5%	1/10W (EC79i)
R165	1-216-813-11	METAL CHIP	220	5%	1/10W (EC79i)
R166	1-216-813-11	METAL CHIP	220	5%	1/10W (EC79i)
R167	1-216-813-11	METAL CHIP	220	5%	1/10W (EC79i)

****

3CH AMP BOARD (EC99i)
****

Ref. No.	Part No.	Description			Remark
		< CAPACITOR >			
C201	1-126-960-11	ELECT	1uF	20%	50V
C202	1-126-960-11	ELECT	1uF	20%	50V
C203	1-164-315-11	CERAMIC CHIP	470PF	5%	50V
C204	1-164-315-11	CERAMIC CHIP	470PF	5%	50V
C205	1-162-927-11	CERAMIC CHIP	100PF	5%	50V
C206	1-162-927-11	CERAMIC CHIP	100PF	5%	50V
C207	1-126-960-11	ELECT	1uF	20%	50V
C208	1-126-960-11	ELECT	1uF	20%	50V
C209	1-162-908-11	CERAMIC CHIP	3PF	0.25PF	50V
C210	1-162-908-11	CERAMIC CHIP	3PF	0.25PF	50V
C211	1-126-960-11	ELECT	1uF	20%	50V
C212	1-164-315-11	CERAMIC CHIP	470PF	5%	50V
C213	1-162-927-11	CERAMIC CHIP	100PF	5%	50V
C214	1-126-947-11	ELECT	47uF	20%	35V
C215	1-162-908-11	CERAMIC CHIP	3PF	0.25PF	50V
C216	1-162-968-11	CERAMIC CHIP	0.0047uF	10%	50V
C217	1-162-970-11	CERAMIC CHIP	0.01uF	10%	25V
C218	1-162-970-11	CERAMIC CHIP	0.01uF	10%	25V
C219	1-128-576-11	ELECT	100uF	20%	63V
C220	1-128-576-11	ELECT	100uF	20%	63V
C223	1-165-621-91	CERAMIC CHIP	0.1uF		50V
C224	1-165-621-91	CERAMIC CHIP	0.1uF		50V
C225	1-100-566-91	CERAMIC CHIP	0.1uF	10%	25V
C226	1-100-566-91	CERAMIC CHIP	0.1uF	10%	25V
C227	1-100-566-91	CERAMIC CHIP	0.1uF	10%	25V
C228	1-100-566-91	CERAMIC CHIP	0.1uF	10%	25V
C229	1-165-621-91	CERAMIC CHIP	0.1uF		50V
C230	1-165-621-91	CERAMIC CHIP	0.1uF		50V

Ref. No.	Part No.	Description				Remark
		< CONNECTOR >				
CN203	1-568-826-11	CONNECTOR, FFC 7P				
CN205	1-820-831-11	HOLDER, CABLE 7P				
		< DIODE >				
D201	6-500-335-01	DIODE MC2838-T112-1				
D202	6-501-817-01	DIODE MA2J1110GLS0				
D203	6-501-817-01	DIODE MA2J1110GLS0				
		< IC >				
IC201	6-712-141-01	IC STK433-330-E				
		< JUMPER RESISTOR >				
JR201	1-216-864-11	SHORT CHIP	0			
JR202	1-216-864-11	SHORT CHIP	0			
		< TRANSISTOR >				
Q201	6-551-270-01	TRANSISTOR	2SA2026			
Q202	6-551-270-01	TRANSISTOR	2SA2026			
Q203	6-551-270-01	TRANSISTOR	2SA2026			
		< RESISTOR >				
R203	1-216-822-11	METAL CHIP	1.2K	5%	1/10W	
R204	1-216-822-11	METAL CHIP	1.2K	5%	1/10W	
R205	1-216-829-11	METAL CHIP	4.7K	5%	1/10W	
R206	1-216-829-11	METAL CHIP	4.7K	5%	1/10W	
R207	1-216-841-11	METAL CHIP	47K	5%	1/10W	
R208	1-216-841-11	METAL CHIP	47K	5%	1/10W	
R209	1-216-823-11	METAL CHIP	1.5K	5%	1/10W	
R210	1-216-823-11	METAL CHIP	1.5K	5%	1/10W	
R213	1-216-841-11	METAL CHIP	47K	5%	1/10W	
R214	1-216-841-11	METAL CHIP	47K	5%	1/10W	
R216	1-216-813-11	METAL CHIP	220	5%	1/10W	
R217	1-216-837-11	METAL CHIP	22K	5%	1/10W	
R218	1-216-841-11	METAL CHIP	47K	5%	1/10W	
R219	1-216-821-11	METAL CHIP	1K	5%	1/10W	
R220	1-216-817-11	METAL CHIP	470	5%	1/10W	
R221	1-216-841-11	METAL CHIP	47K	5%	1/10W	
R222	1-216-809-11	METAL CHIP	100	5%	1/10W	
R223	1-216-821-11	METAL CHIP	1K	5%	1/10W	
R225	1-216-813-11	METAL CHIP	220	5%	1/10W	
R226	1-216-813-11	METAL CHIP	220	5%	1/10W	
R227	1-216-813-11	METAL CHIP	220	5%	1/10W	
R228	1-216-813-11	METAL CHIP	220	5%	1/10W	
⚠ R229	1-216-361-31	METAL OXIDE	0.22	5%	2W	F
⚠ R230	1-216-361-31	METAL OXIDE	0.22	5%	2W	F
R231	1-216-822-11	METAL CHIP	1.2K	5%	1/10W	
R232	1-216-822-11	METAL CHIP	1.2K	5%	1/10W	
R233	1-216-837-11	METAL CHIP	22K	5%	1/10W	
R234	1-216-837-11	METAL CHIP	22K	5%	1/10W	
R235	1-216-825-11	METAL CHIP	2.2K	5%	1/10W	
R236	1-216-825-11	METAL CHIP	2.2K	5%	1/10W	
⚠ R237	1-216-365-61	METAL OXIDE	0.47	5%	2W	F
⚠ R238	1-216-365-61	METAL OXIDE	0.47	5%	2W	F
R239	1-216-823-11	METAL CHIP	1.5K	5%	1/10W	
R240	1-216-837-11	METAL CHIP	22K	5%	1/10W	
R241	1-216-825-11	METAL CHIP	2.2K	5%	1/10W	
R242	1-216-823-11	METAL CHIP	1.5K	5%	1/10W	
R244	1-216-864-11	SHORT CHIP	0			
R245	1-216-817-11	METAL CHIP	470	5%	1/10W	
R246	1-216-817-11	METAL CHIP	470	5%	1/10W	

****

Ref. No.	Part No.	Description				Remark
	A-1217-914-A	CD BOARD, COMPLETE				
		**********				
		< CAPACITOR >				
C100	1-164-360-11	CERAMIC CHIP	0.1uF			16V
C101	1-164-360-11	CERAMIC CHIP	0.1uF			16V
C102	1-164-360-11	CERAMIC CHIP	0.1uF			16V
C103	1-164-360-11	CERAMIC CHIP	0.1uF			16V
C104	1-164-360-11	CERAMIC CHIP	0.1uF			16V
C105	1-164-360-11	CERAMIC CHIP	0.1uF			16V
C106	1-128-995-21	ELECT CHIP	100uF	20%		10V
C107	1-164-360-11	CERAMIC CHIP	0.1uF			16V
C108	1-164-360-11	CERAMIC CHIP	0.1uF			16V
C109	1-164-360-11	CERAMIC CHIP	0.1uF			16V
C110	1-164-360-11	CERAMIC CHIP	0.1uF			16V
C112	1-164-360-11	CERAMIC CHIP	0.1uF			16V
C113	1-164-360-11	CERAMIC CHIP	0.1uF			16V
C115	1-124-778-00	ELECT CHIP	22uF	20%		6.3V
C116	1-164-360-11	CERAMIC CHIP	0.1uF			16V
C117	1-164-227-11	CERAMIC CHIP	0.022uF	10%		25V
C118	1-162-970-11	CERAMIC CHIP	0.01uF	10%		25V
C119	1-164-227-11	CERAMIC CHIP	0.022uF	10%		25V
C120	1-162-970-11	CERAMIC CHIP	0.01uF	10%		25V
C122	1-164-315-11	CERAMIC CHIP	470PF	5%		50V
C123	1-164-315-11	CERAMIC CHIP	470PF	5%		50V
C124	1-162-968-11	CERAMIC CHIP	0.0047uF	10%		50V
C125	1-162-968-11	CERAMIC CHIP	0.0047uF	10%		50V
C126	1-107-826-11	CERAMIC CHIP	0.1uF	10%		16V
C127	1-162-966-11	CERAMIC CHIP	0.0022uF	10%		50V
C128	1-162-910-11	CERAMIC CHIP	5PF	0.25PF		50V
C130	1-162-910-11	CERAMIC CHIP	5PF	0.25PF		50V
C132	1-164-360-11	CERAMIC CHIP	0.1uF			16V
C133	1-107-826-11	CERAMIC CHIP	0.1uF	10%		16V
C136	1-162-923-11	CERAMIC CHIP	47PF	5%		50V
C137	1-162-970-11	CERAMIC CHIP	0.01uF	10%		25V
C138	1-164-315-11	CERAMIC CHIP	470PF	5%		50V
C139	1-162-970-11	CERAMIC CHIP	0.01uF	10%		25V
C140	1-162-970-11	CERAMIC CHIP	0.01uF	10%		25V
C141	1-162-966-11	CERAMIC CHIP	0.0022uF	10%		50V
C142	1-107-826-11	CERAMIC CHIP	0.1uF	10%		16V
C143	1-162-970-11	CERAMIC CHIP	0.01uF	10%		25V
C144	1-107-826-11	CERAMIC CHIP	0.1uF	10%		16V
C145	1-162-970-11	CERAMIC CHIP	0.01uF	10%		25V
C146	1-164-315-11	CERAMIC CHIP	470PF	5%		50V
C147	1-107-826-11	CERAMIC CHIP	0.1uF	10%		16V
C148	1-162-923-11	CERAMIC CHIP	47PF	5%		50V
C149	1-162-919-11	CERAMIC CHIP	22PF	5%		50V
C150	1-162-964-11	CERAMIC CHIP	0.001uF	10%		50V
C151	1-164-315-11	CERAMIC CHIP	470PF	5%		50V
C152	1-164-315-11	CERAMIC CHIP	470PF	5%		50V
C153	1-164-360-11	CERAMIC CHIP	0.1uF			16V
C201	1-128-995-21	ELECT CHIP	100uF	20%		10V
C202	1-128-995-21	ELECT CHIP	100uF	20%		10V
C204	1-164-360-11	CERAMIC CHIP	0.1uF			16V
C205	1-164-360-11	CERAMIC CHIP	0.1uF			16V
C206	1-165-908-11	CERAMIC CHIP	1uF	10%		10V
C207	1-165-908-11	CERAMIC CHIP	1uF	10%		10V

CD IP

Ref. No.	Part No.	Description			Remark
C301	1-164-360-11	CERAMIC CHIP	0.1uF		16V
C302	1-137-710-91	CERAMIC CHIP	10uF	20%	6.3V
C303	1-137-710-91	CERAMIC CHIP	10uF	20%	6.3V
C306	1-128-995-21	ELECT CHIP	100uF	20%	10V
C307	1-165-908-11	CERAMIC CHIP	1uF	10%	10V
C309	1-162-964-11	CERAMIC CHIP	0.001uF	10%	50V
C401	1-128-394-11	ELECT CHIP	220uF	20%	10V
C403	1-164-360-11	CERAMIC CHIP	0.1uF		16V
C404	1-164-360-11	CERAMIC CHIP	0.1uF		16V
C405	1-164-360-11	CERAMIC CHIP	0.1uF		16V
		< CONNECTOR >			
CN201	1-784-833-51	CONNECTOR, FFC (LIF (NON-ZIF)) 21P			
CN301	1-770-425-51	CONNECTOR, FFC/FPC 16P			
		< IC >			
IC101	6-709-624-01	IC TC94A70FG-006			
IC201	6-710-808-01	IC TK63115SCL-G@GT			
IC401	6-710-637-01	IC BA5826SFP-E2			
		< TRANSISTOR >			
Q301	6-551-120-01	TRANSISTOR	2SA2119K		
		< RESISTOR >			
R101	1-216-813-11	METAL CHIP	220	5%	1/10W
R102	1-216-833-11	METAL CHIP	10K	5%	1/10W
R104	1-216-295-91	SHORT CHIP	0		
R105	1-216-857-11	METAL CHIP	1M	5%	1/10W
R106	1-216-821-11	METAL CHIP	1K	5%	1/10W
R108	1-216-864-11	SHORT CHIP	0		
R110	1-216-833-11	METAL CHIP	10K	5%	1/10W
R111	1-216-809-11	METAL CHIP	100	5%	1/10W
R112	1-216-809-11	METAL CHIP	100	5%	1/10W
R113	1-216-833-11	METAL CHIP	10K	5%	1/10W
R114	1-216-833-11	METAL CHIP	10K	5%	1/10W
R118	1-216-845-11	METAL CHIP	100K	5%	1/10W
R120	1-216-864-11	SHORT CHIP	0		
R125	1-216-864-11	SHORT CHIP	0		
R126	1-216-864-11	SHORT CHIP	0		
R127	1-216-864-11	SHORT CHIP	0		
R128	1-216-853-11	METAL CHIP	470K	5%	1/10W
R129	1-216-821-11	METAL CHIP	1K	5%	1/10W
R130	1-216-829-11	METAL CHIP	4.7K	5%	1/10W
R134	1-216-857-11	METAL CHIP	1M	5%	1/10W
R135	1-216-853-11	METAL CHIP	470K	5%	1/10W
R136	1-216-837-11	METAL CHIP	22K	5%	1/10W
R139	1-216-841-11	METAL CHIP	47K	5%	1/10W
R140	1-216-864-11	SHORT CHIP	0		
R142	1-216-837-11	METAL CHIP	22K	5%	1/10W
R143	1-216-841-11	METAL CHIP	47K	5%	1/10W
R144	1-216-837-11	METAL CHIP	22K	5%	1/10W
R145	1-216-864-11	SHORT CHIP	0		
R146	1-216-864-11	SHORT CHIP	0		
R147	1-216-864-11	SHORT CHIP	0		
R148	1-216-864-11	SHORT CHIP	0		
R149	1-216-864-11	SHORT CHIP	0		
R150	1-216-864-11	SHORT CHIP	0		
R151	1-216-864-11	SHORT CHIP	0		
R153	1-216-857-11	METAL CHIP	1M	5%	1/10W
R154	1-216-857-11	METAL CHIP	1M	5%	1/10W
R155	1-216-805-11	METAL CHIP	47	5%	1/10W
R156	1-216-809-11	METAL CHIP	100	5%	1/10W
R157	1-216-809-11	METAL CHIP	100	5%	1/10W
R201	1-216-295-91	SHORT CHIP	0		
R202	1-216-295-91	SHORT CHIP	0		
R203	1-216-809-11	METAL CHIP	100	5%	1/10W
R204	1-216-809-11	METAL CHIP	100	5%	1/10W
R205	1-216-809-11	METAL CHIP	100	5%	1/10W
R206	1-216-809-11	METAL CHIP	100	5%	1/10W
R207	1-216-809-11	METAL CHIP	100	5%	1/10W
R208	1-216-809-11	METAL CHIP	100	5%	1/10W
R209	1-216-809-11	METAL CHIP	100	5%	1/10W
R210	1-216-809-11	METAL CHIP	100	5%	1/10W
R211	1-216-809-11	METAL CHIP	100	5%	1/10W
R212	1-216-809-11	METAL CHIP	100	5%	1/10W
R218	1-216-845-11	METAL CHIP	100K	5%	1/10W
R219	1-216-845-11	METAL CHIP	100K	5%	1/10W
R220	1-216-845-11	METAL CHIP	100K	5%	1/10W
R221	1-216-845-11	METAL CHIP	100K	5%	1/10W
R222	1-216-845-11	METAL CHIP	100K	5%	1/10W
R223	1-216-845-11	METAL CHIP	100K	5%	1/10W
R301	1-216-845-11	METAL CHIP	100K	5%	1/10W
R302	1-216-864-11	SHORT CHIP	0		
R303	1-216-789-11	METAL CHIP	2.2	5%	1/10W
R304	1-216-789-11	METAL CHIP	2.2	5%	1/10W
R402	1-216-825-11	METAL CHIP	2.2K	5%	1/10W
R405	1-216-833-11	METAL CHIP	10K	5%	1/10W
R408	1-216-825-11	METAL CHIP	2.2K	5%	1/10W
R414	1-216-829-11	METAL CHIP	4.7K	5%	1/10W
R415	1-216-841-11	METAL CHIP	47K	5%	1/10W
		< VIBRATOR >			
X102	1-795-101-21	VIBRATOR, CERAMIC (16.9344MHz)			

****

IP BOARD
****

		< CAPACITOR >			
C903	1-164-156-11	CERAMIC CHIP	0.1uF		25V
C904	1-164-156-11	CERAMIC CHIP	0.1uF		25V
C907	1-162-964-11	CERAMIC CHIP	0.001uF	10%	50V
C908	1-162-964-11	CERAMIC CHIP	0.001uF	10%	50V
C909	1-162-964-11	CERAMIC CHIP	0.001uF	10%	50V
		< CONNECTOR >			
CN902	1-820-701-11	PIN, CONNECTOR 30P (iPod Dock)			
		< DIODE >			
D901	8-719-071-34	DIODE RB521S-30-TE61			
D902	6-502-733-01	LED SML-E12UWT86R (iPod INDICATOR) (EC79i/EC99i)			
D906	6-502-733-01	LED SML-E12UWT86R (iPod INDICATOR) (EC79i/EC99i)			
		< RESISTOR >			
R901	1-216-809-11	METAL CHIP	100	5%	1/10W
R902	1-216-809-11	METAL CHIP	100	5%	1/10W
R903	1-216-809-11	METAL CHIP	100	5%	1/10W
R904	1-216-809-11	METAL CHIP	100	5%	1/10W

Ref. No.	Part No.	Description			Remark
R905	1-218-895-11	METAL CHIP	100K	0.5%	1/10W
R906	1-218-895-11	METAL CHIP	100K	0.5%	1/10W
R907	1-218-892-11	METAL CHIP	75K	0.5%	1/10W
R908	1-218-895-11	METAL CHIP	100K	0.5%	1/10W
R909	1-218-895-11	METAL CHIP	100K	0.5%	1/10W
R910	1-218-892-11	METAL CHIP	75K	0.5%	1/10W
R911	1-218-907-11	METAL CHIP	330K	0.5%	1/10W
R912	1-218-903-11	METAL CHIP	220K	0.5%	1/10W
R913	1-216-809-11	METAL CHIP	100	5%	1/10W
R914	1-216-809-11	METAL CHIP	100	5%	1/10W
R917	1-216-811-11	METAL CHIP	150	5%	1/10W (EC79i/EC99i)
R920	1-216-811-11	METAL CHIP	150	5%	1/10W (EC79i/EC99i)

****

JACK BOARD
****

< CAPACITOR >

C495	1-162-964-11	CERAMIC CHIP	0.001uF	10%	50V
C496	1-162-964-11	CERAMIC CHIP	0.001uF	10%	50V

< CONNECTOR >

CN496	1-784-770-11	CONNECTOR, FFC 9P (EC79i/EC99i)
CN497	1-568-826-11	CONNECTOR, FFC 7P (EC69i)

< DIODE >

D491	8-719-062-51	DIODE 1PS226-115 (EC79i/EC99i)

< JACK >

J491	1-566-822-51	JACK (PC IN) (EC79i/EC99i)
J492	1-815-629-21	JACK (PHONES)

< RESISTOR >

R491	1-216-837-11	METAL CHIP	22K	5%	1/10W (EC79i/EC99i)
R492	1-216-837-11	METAL CHIP	22K	5%	1/10W (EC79i/EC99i)

****

KEY BOARD
****

< CONNECTOR >

CN313	1-815-551-11	PIN, CONNECTOR (PWB) 3P

< RESISTOR >

R404	1-216-822-11	METAL CHIP	1.2K	5%	1/10W
R405	1-216-823-11	METAL CHIP	1.5K	5%	1/10W
R406	1-216-825-11	METAL CHIP	2.2K	5%	1/10W
R407	1-216-826-11	METAL CHIP	2.7K	5%	1/10W
R408	1-216-828-11	METAL CHIP	3.9K	5%	1/10W (EC79i: UK, AUS/EC99i)

< SWITCH >

SW311	1-771-410-21	SWITCH, TACTILE (■)
SW321	1-771-410-21	SWITCH, TACTILE (CD)
SW322	1-771-410-21	SWITCH, TACTILE (iPod)
SW323	1-771-410-21	SWITCH, TACTILE (FOLDER +)
SW324	1-771-410-21	SWITCH, TACTILE (TUNING +, ▶▶ ▷▷I)
SW325	1-771-410-21	SWITCH, TACTILE (DSGX)
SW326	1-771-410-21	SWITCH, TACTILE (⏏) (EC79i: UK, AUS/EC99i)

****

LOADING BOARD (EC79i: UK, AUS/EC99i)
****

When the LOADING board is damaged, exchange the entire CDM76A Assy (EC79i: UK, Australian/EC99i).

****

A-1599-061-A	MAIN BOARD, COMPLETE (EC99i: US, CND)
A-1599-076-A	MAIN BOARD, COMPLETE (EC99i: UK, AUS)
A-1599-082-A	MAIN BOARD, COMPLETE (EC79i: US, CND)
A-1599-088-A	MAIN BOARD, COMPLETE (EC79i: UK, AUS)
A-1599-114-A	MAIN BOARD, COMPLETE (EC69i: US, CND)
A-1599-131-A	MAIN BOARD, COMPLETE (EC69i: UK, AUS)

****

7-685-647-79	SCREW +BVTP 3X10 TYPE2 N-S (EC99i)

< CAPACITOR >

C601	1-126-962-11	ELECT	3.3uF	20%	50V
C602	1-126-947-11	ELECT	47uF	20%	35V
C603	1-162-968-11	CERAMIC CHIP	0.0047uF	10%	50V (EC79i/EC99i)
C604	1-100-566-91	CERAMIC CHIP	0.1uF	10%	25V (EC79i/EC99i)
C605	1-100-566-91	CERAMIC CHIP	0.1uF	10%	25V (EC79i/EC99i)
C606	1-162-968-11	CERAMIC CHIP	0.0047uF	10%	50V (EC79i/EC99i)
C607	1-100-566-91	CERAMIC CHIP	0.1uF	10%	25V
C608	1-100-566-91	CERAMIC CHIP	0.1uF	10%	25V
C609	1-162-968-11	CERAMIC CHIP	0.0047uF	10%	50V
C610	1-162-968-11	CERAMIC CHIP	0.0047uF	10%	50V
C611	1-127-715-11	CERAMIC CHIP	0.22uF	10%	16V
C612	1-127-715-11	CERAMIC CHIP	0.22uF	10%	16V
C613	1-126-964-11	ELECT	10uF	20%	50V
C614	1-126-963-11	ELECT	4.7uF	20%	50V
C615	1-100-566-91	CERAMIC CHIP	0.1uF	10%	25V (EC79i/EC99i)
C616	1-100-566-91	CERAMIC CHIP	0.1uF	10%	25V (EC79i/EC99i)
C617	1-100-566-91	CERAMIC CHIP	0.1uF	10%	25V
C618	1-100-566-91	CERAMIC CHIP	0.1uF	10%	25V
C619	1-162-970-11	CERAMIC CHIP	0.01uF	10%	25V
C620	1-104-658-91	ELECT	100uF	20%	10V
C621	1-130-777-00	MYLAR	0.1uF	5%	100V
C622	1-114-471-51	ELECT	3300uF	20%	63V (EC79i/EC99i)
C622	1-128-550-11	ELECT	2200uF	20%	50V (EC69i)
C623	1-130-777-00	MYLAR	0.1uF	5%	100V
C624	1-126-923-91	ELECT	220uF	20%	10V (EC79i/EC99i)
C626	1-114-471-51	ELECT	3300uF	20%	63V (EC79i/EC99i)
C626	1-128-550-11	ELECT	2200uF	20%	50V (EC69i)
C627	1-126-943-11	ELECT	2200uF	20%	25V
C628	1-126-942-61	ELECT	1000uF	20%	25V
C629	1-162-968-11	CERAMIC CHIP	0.0047uF	10%	50V

Ref. No.	Part No.	Description			Remark
C630	1-126-947-11	ELECT	47uF	20%	35V
C631	1-126-933-11	ELECT	100uF	20%	16V
C632	1-126-963-11	ELECT	4.7uF	20%	50V
C633	1-165-176-11	CERAMIC CHIP	0.047uF	10%	16V
C634	1-165-176-11	CERAMIC CHIP	0.047uF	10%	16V
C636	1-126-960-11	ELECT	1uF	20%	50V
C637	1-165-176-11	CERAMIC CHIP	0.047uF	10%	16V
C638	1-165-176-11	CERAMIC CHIP	0.047uF	10%	16V
C639	1-162-966-11	CERAMIC CHIP	0.0022uF	10%	50V
C640	1-162-966-11	CERAMIC CHIP	0.0022uF	10%	50V
C641	1-126-962-11	ELECT	3.3uF	20%	50V
C642	1-164-227-11	CERAMIC CHIP	0.022uF	10%	25V
C644	1-126-960-11	ELECT	1uF	20%	50V
C645	1-162-964-11	CERAMIC CHIP	0.001uF	10%	50V
C646	1-126-960-11	ELECT	1uF	20%	50V
C647	1-162-966-11	CERAMIC CHIP	0.0022uF	10%	50V
C648	1-125-837-91	CERAMIC CHIP	1uF	10%	6.3V
C649	1-162-960-11	CERAMIC CHIP	220PF	10%	50V (EC79i/EC99i)
C650	1-125-837-91	CERAMIC CHIP	1uF	10%	6.3V (EC79i/EC99i)
C652	1-125-837-91	CERAMIC CHIP	1uF	10%	6.3V
C654	1-125-837-91	CERAMIC CHIP	1uF	10%	6.3V
C655	1-162-960-11	CERAMIC CHIP	220PF	10%	50V (EC79i/EC99i)
C656	1-125-837-91	CERAMIC CHIP	1uF	10%	6.3V (EC79i/EC99i)
C657	1-162-966-11	CERAMIC CHIP	0.0022uF	10%	50V
C658	1-125-837-91	CERAMIC CHIP	1uF	10%	6.3V
C661	1-126-964-11	ELECT	10uF	20%	50V
C662	1-162-967-11	CERAMIC CHIP	0.0033uF	10%	50V
C663	1-126-960-11	ELECT	1uF	20%	50V
C664	1-126-960-11	ELECT	1uF	20%	50V
C665	1-126-960-11	ELECT	1uF	20%	50V
C666	1-162-964-11	CERAMIC CHIP	0.001uF	10%	50V
C667	1-126-933-11	ELECT	100uF	20%	16V
C674	1-164-227-11	CERAMIC CHIP	0.022uF	10%	25V
C684	1-100-597-91	CERAMIC CHIP	0.1uF	10%	25V (EC79i/EC99i)
C684	1-110-563-11	CERAMIC CHIP	0.068uF	10%	16V (EC69i)
C685	1-100-756-91	CERAMIC CHIP	0.047uF	10%	50V (EC69i)
C685	1-110-563-11	CERAMIC CHIP	0.068uF	10%	16V (EC79i/EC99i)
C686	1-100-597-91	CERAMIC CHIP	0.1uF	10%	25V (EC79i/EC99i)
C686	1-110-563-11	CERAMIC CHIP	0.068uF	10%	16V (EC69i)
C687	1-100-756-91	CERAMIC CHIP	0.047uF	10%	50V (EC69i)
C687	1-110-563-11	CERAMIC CHIP	0.068uF	10%	16V (EC79i/EC99i)
C688	1-126-964-11	ELECT	10uF	20%	50V
C694	1-162-964-11	CERAMIC CHIP	0.001uF	10%	50V
C695	1-125-837-91	CERAMIC CHIP	1uF	10%	6.3V
C696	1-125-837-91	CERAMIC CHIP	1uF	10%	6.3V
C699	1-162-964-11	CERAMIC CHIP	0.001uF	10%	50V
C700	1-162-964-11	CERAMIC CHIP	0.001uF	10%	50V
C701	1-100-566-91	CERAMIC CHIP	0.1uF	10%	25V (EC99i)
C702	1-100-566-91	CERAMIC CHIP	0.1uF	10%	25V (EC99i)

Ref. No.	Part No.	Description			Remark
C705	1-126-964-11	ELECT	10uF	20%	50V (EC99i)
C706	1-126-933-11	ELECT	100uF	20%	16V (EC99i)
C707	1-126-960-11	ELECT	1uF	20%	50V (EC99i)
C708	1-107-726-91	CERAMIC CHIP	0.01uF	10%	16V (EC99i)
C709	1-137-190-91	FILM	0.22uF	5%	50V (EC99i)
C710	1-137-190-91	FILM	0.22uF	5%	50V (EC99i)
C711	1-137-190-91	FILM	0.22uF	5%	50V (EC99i)
C712	1-136-161-00	FILM	0.047uF	5%	50V (EC99i)
C713	1-162-962-11	CERAMIC CHIP	470PF	10%	50V
C715	1-164-156-11	CERAMIC CHIP	0.1uF		25V
C760	1-104-665-11	ELECT	100uF	20%	25V
C761	1-126-935-11	ELECT	470uF	20%	16V
C762	1-126-925-91	ELECT	470uF	20%	10V
C763	1-164-315-11	CERAMIC CHIP	470PF	5%	50V
C764	1-126-964-11	ELECT	10uF	20%	50V
C765	1-162-964-11	CERAMIC CHIP	0.001uF	10%	50V
C766	1-162-968-11	CERAMIC CHIP	0.0047uF	10%	50V
C772	1-125-837-91	CERAMIC CHIP	1uF	10%	6.3V
C773	1-125-837-91	CERAMIC CHIP	1uF	10%	6.3V
C775	1-126-947-11	ELECT	47uF	20%	35V
C776	1-104-662-91	ELECT	22uF	20%	25V
C786	1-125-837-91	CERAMIC CHIP	1uF	10%	6.3V
C787	1-125-837-91	CERAMIC CHIP	1uF	10%	6.3V
C802	1-126-933-11	ELECT	100uF	20%	16V
C803	1-125-837-91	CERAMIC CHIP	1uF	10%	6.3V
C804	1-162-918-11	CERAMIC CHIP	18PF	5%	50V
C805	1-117-863-11	CERAMIC CHIP	0.47uF	10%	6.3V
C806	1-162-962-11	CERAMIC CHIP	470PF	10%	50V
C807	1-125-837-91	CERAMIC CHIP	1uF	10%	6.3V
C808	1-162-918-11	CERAMIC CHIP	18PF	5%	50V
C809	1-162-964-11	CERAMIC CHIP	0.001uF	10%	50V
C810	1-162-964-11	CERAMIC CHIP	0.001uF	10%	50V
C811	1-162-964-11	CERAMIC CHIP	0.001uF	10%	50V
C814	1-162-968-11	CERAMIC CHIP	0.0047uF	10%	50V (EC69i: UK, AUS/EC79i: UK, AUS/EC99i: UK, AUS)
C814	1-162-970-11	CERAMIC CHIP	0.01uF	10%	25V (EC69i: US, CND/EC79i: US, CND/EC99i: US, CND)
C815	1-162-968-11	CERAMIC CHIP	0.0047uF	10%	50V (EC69i: UK, AUS/EC79i: UK, AUS/EC99i: UK, AUS)
C815	1-162-970-11	CERAMIC CHIP	0.01uF	10%	25V (EC69i: US, CND/EC79i: US, CND/EC99i: US, CND)
C816	1-162-970-11	CERAMIC CHIP	0.01uF	10%	25V
C817	1-162-970-11	CERAMIC CHIP	0.01uF	10%	25V
C819	1-162-915-11	CERAMIC CHIP	10PF	0.5PF	50V
C820	1-162-910-11	CERAMIC CHIP	5PF	0.25PF	50V
C821	1-162-966-11	CERAMIC CHIP	0.0022uF	10%	50V
C822	1-126-965-91	ELECT	22uF	20%	50V
C823	1-126-923-91	ELECT	220uF	20%	10V
C824	1-165-908-11	CERAMIC CHIP	1uF	10%	10V
C826	1-162-964-11	CERAMIC CHIP	0.001uF	10%	50V
C827	1-165-176-11	CERAMIC CHIP	0.047uF	10%	16V
C828	1-162-927-11	CERAMIC CHIP	100PF	5%	50V
C829	1-117-863-11	CERAMIC CHIP	0.47uF	10%	6.3V
C830	1-162-907-11	CERAMIC CHIP	2PF	0.25PF	50V

Ref. No.	Part No.	Description	Remark
C831	1-117-863-11	CERAMIC CHIP 0.47uF 10% 6.3V	
C832	1-117-863-11	CERAMIC CHIP 0.47uF 10% 6.3V	
C833	1-126-923-91	ELECT 220uF 20% 10V	
C834	1-162-915-11	CERAMIC CHIP 10PF 0.5PF 50V	
C835	1-165-176-11	CERAMIC CHIP 0.047uF 10% 16V	
C836	1-164-227-11	CERAMIC CHIP 0.022uF 10% 25V	
C837	1-162-915-11	CERAMIC CHIP 10PF 0.5PF 50V	
C838	1-162-964-11	CERAMIC CHIP 0.001uF 10% 50V	
C840	1-107-826-11	CERAMIC CHIP 0.1uF 10% 16V	
C841	1-162-964-11	CERAMIC CHIP 0.001uF 10% 50V	
C843	1-164-156-11	CERAMIC CHIP 0.1uF 25V	
C844	1-107-826-11	CERAMIC CHIP 0.1uF 10% 16V	
C845	1-115-467-11	CERAMIC CHIP 0.22uF 10% 10V	
C846	1-162-970-11	CERAMIC CHIP 0.01uF 10% 25V	
C847	1-107-826-11	CERAMIC CHIP 0.1uF 10% 16V	
C848	1-164-156-11	CERAMIC CHIP 0.1uF 25V	
C851	1-164-392-11	CERAMIC CHIP 390PF 5% 50V	
C853	1-107-826-11	CERAMIC CHIP 0.1uF 10% 16V	(EC99i)
C857	1-162-970-11	CERAMIC CHIP 0.01uF 10% 25V	(EC69i: US, CND/EC79i: US, CND/EC99i: US, CND)
		< FILTER >	
CF801	1-781-962-21	FILTER, CERAMIC	
		< CONNECTOR >	
CN601	1-819-131-11	PIN, CONNECTOR 3P	
CN603	1-784-766-11	CONNECTOR, FFC 5P	
CN604	1-819-136-11	PIN, CONNECTOR 8P (EC69i/EC79i)	
CN605	1-784-770-11	CONNECTOR, FFC 9P (EC79i/EC99i)	
CN606	1-568-826-11	CONNECTOR, FFC 7P (EC69i)	
CN607	1-784-786-11	CONNECTOR, FFC 25P	
CN609	1-815-444-11	PIN, CONNECTOR (PWB) 3P	
CN632	1-819-135-11	PIN, CONNECTOR 7P (EC79i/EC99i)	
CN633	1-819-133-11	PIN, CONNECTOR (EC69i/EC99i)	
CN643	1-568-826-11	CONNECTOR, FFC 7P (EC99i)	
CN653	1-568-830-11	CONNECTOR, FFC 11P	
CN654	1-819-138-11	PIN, CONNECTOR 10P (EC99i)	
* CN801	1-506-680-11	PLUG, CONNECTOR (2.5mm) 3P	(ANTENNA FM/AM)
		< DIODE >	
D601	6-500-335-01	DIODE MC2838-T112-1	
D602	6-500-335-01	DIODE MC2838-T112-1	
D603	6-501-817-01	DIODE MA2J1110GLS0 (EC79i/EC99i)	
D604	6-501-817-01	DIODE MA2J1110GLS0	
D605	6-501-817-01	DIODE MA2J1110GLS0	
D606	6-500-334-01	DIODE MC2836-T112-1	
D607	6-502-619-01	DIODE 1N5402-C532-2 (EC69i/EC79i)	
D608	6-502-619-01	DIODE 1N5402-C532-2 (EC69i/EC79i)	
D609	6-502-619-01	DIODE 1N5402-C532-2 (EC69i/EC79i)	
D610	6-502-619-01	DIODE 1N5402-C532-2 (EC69i/EC79i)	
D611	6-501-582-01	DIODE 1N4002-A2	
D612	6-501-582-01	DIODE 1N4002-A2	
D613	6-500-360-01	DIODE D10XB20 (EC99i)	
D614	6-501-817-01	DIODE MA2J1110GLS0	
D615	6-501-582-01	DIODE 1N4002-A2	
D617	6-500-335-01	DIODE MC2838-T112-1	
D621	6-501-722-01	DIODE MAZ8043GMLS0	
D622	6-501-760-01	DIODE MAZ8100GMLS0	

Ref. No.	Part No.	Description	Remark
D627	8-719-062-51	DIODE 1PS226-115	
D628	6-501-817-01	DIODE MA2J1110GLS0	
D629	6-501-582-01	DIODE 1N4002-A2 (EC79i/EC99i)	
D630	6-501-582-01	DIODE 1N4002-A2 (EC79i/EC99i)	
D631	6-501-817-01	DIODE MA2J1110GLS0	
D701	6-502-161-01	DIODE RB055L-40TE25	
D702	6-501-817-01	DIODE MA2J1110GLS0 (EC99i)	
D791	6-501-817-01	DIODE MA2J1110GLS0	
D801	6-502-623-01	DIODE SVC389	
D802	8-719-062-51	DIODE 1PS226-115	
D803	6-501-369-01	DIODE SVC230-TB-E	
D804	6-501-369-01	DIODE SVC230-TB-E	
D805	8-719-062-51	DIODE 1PS226-115	
D806	8-719-062-51	DIODE 1PS226-115	
D807	8-719-062-51	DIODE 1PS226-115	
		< FILTER >	
FL801	1-760-393-11	FILTER, CERAMIC	
FL803	1-236-711-21	FILTER, BAND PASS	
		< IC >	
IC602	6-712-055-01	IC BD3499FV-E2	
IC701	6-600-113-01	IC NJM2368V (TE2)	
IC770	8-759-278-58	IC NJM4558V-TE2	
IC801	6-708-840-01	IC LV23003VA	
		< JUMPER RESISTOR >	
JR600	1-216-864-11	SHORT CHIP 0	
JR601	1-216-864-11	SHORT CHIP 0	
JR602	1-216-864-11	SHORT CHIP 0	
JR603	1-216-864-11	SHORT CHIP 0	
JR605	1-216-864-11	SHORT CHIP 0	
JR607	1-216-864-11	SHORT CHIP 0	
JR608	1-216-864-11	SHORT CHIP 0	
JR609	1-216-864-11	SHORT CHIP 0	
JR610	1-216-864-11	SHORT CHIP 0	
JR614	1-216-864-11	SHORT CHIP 0	
JR615	1-216-864-11	SHORT CHIP 0	
JR617	1-216-864-11	SHORT CHIP 0	
JR618	1-216-864-11	SHORT CHIP 0	
JR619	1-216-864-11	SHORT CHIP 0	
JR620	1-216-864-11	SHORT CHIP 0	
		< COIL >	
L601	1-456-107-11	COIL, AIR-CORE (EC79i/EC99i)	
L602	1-456-107-11	COIL, AIR-CORE (EC79i/EC99i)	
L603	1-456-107-11	COIL, AIR-CORE	
L604	1-456-107-11	COIL, AIR-CORE	
L701	1-456-467-11	INDUCTOR 100uH	
L702	1-456-107-11	COIL, AIR-CORE (EC99i)	
L802	1-457-168-11	COIL, DET	
L803	1-457-162-22	COIL, AIR-CORE	
L804	1-457-163-22	COIL, AIR-CORE	
L805	1-457-161-11	COIL, AM ANTENNA	
L806	1-410-522-11	INDUCTOR 120uH	
		< TRANSISTOR >	
Q601	8-729-037-03	TRANSISTOR KTA1266GR-AT (EC69i)	
Q601	8-729-040-76	TRANSISTOR KTA1273-Y-AT (EC79i/EC99i)	
Q602	8-729-120-28	TRANSISTOR 2SC1623-L5L6	

MAIN

Ref. No.	Part No.	Description			Remark
Q603	8-729-120-28	TRANSISTOR	2SC1623-L5L6		
Q604	8-729-120-28	TRANSISTOR	2SC1623-L5L6		
Q605	8-729-120-28	TRANSISTOR	2SC1623-L5L6		
Q606	8-729-120-28	TRANSISTOR	2SC1623-L5L6		
Q607	8-729-120-28	TRANSISTOR	2SC1623-L5L6 (EC79i/EC99i)		
Q608	8-729-120-28	TRANSISTOR	2SC1623-L5L6		
Q610	8-729-120-28	TRANSISTOR	2SC1623-L5L6 (EC99i)		
Q611	8-729-120-28	TRANSISTOR	2SC1623-L5L6		
Q612	6-551-696-01	TRANSISTOR	ISA1235AC1TP-1EF		
Q613	6-551-696-01	TRANSISTOR	ISA1235AC1TP-1EF (EC99i)		
Q614	6-551-696-01	TRANSISTOR	ISA1235AC1TP-1EF (EC99i)		
Q618	6-551-696-01	TRANSISTOR	ISA1235AC1TP-1EF		
Q619	8-729-120-28	TRANSISTOR	2SC1623-L5L6		
Q701	8-729-120-28	TRANSISTOR	2SC1623-L5L6 (EC99i)		
Q702	8-729-120-28	TRANSISTOR	2SC1623-L5L6 (EC99i)		
Q703	8-729-120-28	TRANSISTOR	2SC1623-L5L6 (EC99i)		
Q704	8-729-120-28	TRANSISTOR	2SC1623-L5L6 (EC99i)		
Q705	8-729-120-28	TRANSISTOR	2SC1623-L5L6 (EC99i)		
Q706	8-729-040-76	TRANSISTOR	KTA1273-Y-AT		
Q707	8-729-040-76	TRANSISTOR	KTA1273-Y-AT		
Q708	8-729-120-28	TRANSISTOR	2SC1623-L5L6		
Q709	8-729-120-28	TRANSISTOR	2SC1623-L5L6		
Q710	6-551-696-01	TRANSISTOR	ISA1235AC1TP-1EF		
Q801	8-729-120-28	TRANSISTOR	2SC1623-L5L6		
Q802	8-729-120-28	TRANSISTOR	2SC1623-L5L6		
Q804	8-729-120-28	TRANSISTOR	2SC1623-L5L6 (EC99i)		
		< RESISTOR >			
R601	1-216-817-11	METAL CHIP	470	5%	1/10W
R603	1-216-801-11	METAL CHIP	22	5%	1/10W
R604	1-216-845-11	METAL CHIP	100K	5%	1/10W
R605	1-216-801-11	METAL CHIP	22	5%	1/10W
R606	1-216-797-11	METAL CHIP	10	5%	1/10W (EC79i/EC99i)
R607	1-216-797-11	METAL CHIP	10	5%	1/10W (EC79i/EC99i)
R608	1-216-797-11	METAL CHIP	10	5%	1/10W (EC79i/EC99i)
R609	1-216-829-11	METAL CHIP	4.7K	5%	1/10W
R610	1-216-829-11	METAL CHIP	4.7K	5%	1/10W
R611	1-216-797-11	METAL CHIP	10	5%	1/10W
R612	1-216-797-11	METAL CHIP	10	5%	1/10W
R613	1-216-833-11	METAL CHIP	10K	5%	1/10W
R614	1-216-833-11	METAL CHIP	10K	5%	1/10W
R615	1-216-797-11	METAL CHIP	10	5%	1/10W
R616	1-216-828-11	METAL CHIP	3.9K	5%	1/10W (EC69i)
R616	1-216-835-11	METAL CHIP	15K	5%	1/10W (EC79i/EC99i)
R617	1-216-833-11	METAL CHIP	10K	5%	1/10W
R618	1-216-833-11	METAL CHIP	10K	5%	1/10W
R619	1-216-828-11	METAL CHIP	3.9K	5%	1/10W (EC69i)
R619	1-216-835-11	METAL CHIP	15K	5%	1/10W (EC79i/EC99i)
R620	1-216-829-11	METAL CHIP	4.7K	5%	1/10W
R621	1-216-829-11	METAL CHIP	4.7K	5%	1/10W
R622	1-216-839-11	METAL CHIP	33K	5%	1/10W
R623	1-216-833-11	METAL CHIP	10K	5%	1/10W
R624	1-216-833-11	METAL CHIP	10K	5%	1/10W
R625	1-216-839-11	METAL CHIP	33K	5%	1/10W

Ref. No.	Part No.	Description			Remark
R626	1-216-833-11	METAL CHIP	10K	5%	1/10W
R627	1-216-829-11	METAL CHIP	4.7K	5%	1/10W
R628	1-216-833-11	METAL CHIP	10K	5%	1/10W
R629	1-216-829-11	METAL CHIP	4.7K	5%	1/10W
R630	1-216-841-11	METAL CHIP	47K	5%	1/10W
R631	1-216-797-11	METAL CHIP	10	5%	1/10W (EC79i/EC99i)
R632	1-216-845-11	METAL CHIP	100K	5%	1/10W (EC79i/EC99i)
R633	1-216-845-11	METAL CHIP	100K	5%	1/10W (EC79i/EC99i)
R634	1-249-403-11	CARBON	68	5%	1/4W (EC79i/EC99i)
R635	1-249-403-11	CARBON	68	5%	1/4W (EC79i/EC99i)
R636	1-249-403-11	CARBON	68	5%	1/4W (EC79i/EC99i)
R637	1-216-829-11	METAL CHIP	4.7K	5%	1/10W
R638	1-249-403-11	CARBON	68	5%	1/4W
R639	1-216-845-11	METAL CHIP	100K	5%	1/10W
R640	1-216-845-11	METAL CHIP	100K	5%	1/10W
R641	1-249-403-11	CARBON	68	5%	1/4W
R642	1-249-403-11	CARBON	68	5%	1/4W
R643	1-216-833-11	METAL CHIP	10K	5%	1/10W
R644	1-216-821-11	METAL CHIP	1K	5%	1/10W
R645	1-216-825-11	METAL CHIP	2.2K	5%	1/10W
R646	1-216-809-11	METAL CHIP	100	5%	1/10W
R647	1-216-797-11	METAL CHIP	10	5%	1/10W
R648	1-216-841-11	METAL CHIP	47K	5%	1/10W
R649	1-216-825-11	METAL CHIP	2.2K	5%	1/10W
R650	1-216-829-11	METAL CHIP	4.7K	5%	1/10W
R651	1-216-829-11	METAL CHIP	4.7K	5%	1/10W
R652	1-216-809-11	METAL CHIP	100	5%	1/10W
R655	1-216-833-11	METAL CHIP	10K	5%	1/10W
R656	1-216-821-11	METAL CHIP	1K	5%	1/10W
R657	1-216-843-11	METAL CHIP	68K	5%	1/10W
⚠ R658	1-215-890-51	METAL OXIDE	470	5%	2W F
R659	1-216-845-11	METAL CHIP	100K	5%	1/10W (EC99i)
R660	1-216-837-11	METAL CHIP	22K	5%	1/10W (EC79i/EC99i)
R661	1-216-837-11	METAL CHIP	22K	5%	1/10W (EC79i/EC99i)
⚠ R662	1-215-890-51	METAL OXIDE	470	5%	2W F
R664	1-216-845-11	METAL CHIP	100K	5%	1/10W
R665	1-216-845-11	METAL CHIP	100K	5%	1/10W
R666	1-216-821-11	METAL CHIP	1K	5%	1/10W
R667	1-216-841-11	METAL CHIP	47K	5%	1/10W
R668	1-216-837-11	METAL CHIP	22K	5%	1/10W
R669	1-216-845-11	METAL CHIP	100K	5%	1/10W
R670	1-216-833-11	METAL CHIP	10K	5%	1/10W
R672	1-216-833-11	METAL CHIP	10K	5%	1/10W
R673	1-216-817-11	METAL CHIP	470	5%	1/10W
R674	1-249-401-11	CARBON	47	5%	1/4W
R675	1-249-401-11	CARBON	47	5%	1/4W
R676	1-216-833-11	METAL CHIP	10K	5%	1/10W
R677	1-216-833-11	METAL CHIP	10K	5%	1/10W
R678	1-216-841-11	METAL CHIP	47K	5%	1/10W
R679	1-216-837-11	METAL CHIP	22K	5%	1/10W (EC79i/EC99i)
R680	1-216-837-11	METAL CHIP	22K	5%	1/10W (EC79i/EC99i)

MAIN

Ref. No.	Part No.	Description			Remark
R681	1-216-837-11	METAL CHIP	22K	5%	1/10W
R684	1-216-837-11	METAL CHIP	22K	5%	1/10W
R685	1-216-829-11	METAL CHIP	4.7K	5%	1/10W
R686	1-216-842-11	METAL CHIP	56K	5%	1/10W
R687	1-216-837-11	METAL CHIP	22K	5%	1/10W
R688	1-216-817-11	METAL CHIP	470	5%	1/10W
R689	1-216-838-11	METAL CHIP	27K	5%	1/10W
R690	1-216-825-11	METAL CHIP	2.2K	5%	1/10W
R691	1-216-833-11	METAL CHIP	10K	5%	1/10W
R692	1-216-829-11	METAL CHIP	4.7K	5%	1/10W
R693	1-216-821-11	METAL CHIP	1K	5%	1/10W
R696	1-216-833-11	METAL CHIP	10K	5%	1/10W
R697	1-216-821-11	METAL CHIP	1K	5%	1/10W
R700	1-216-829-11	METAL CHIP	4.7K	5%	1/10W (EC79i/EC99i)
R701	1-216-833-11	METAL CHIP	10K	5%	1/10W
R702	1-216-833-11	METAL CHIP	10K	5%	1/10W
R704	1-216-829-11	METAL CHIP	4.7K	5%	1/10W (EC79i/EC99i)
R706	1-216-813-11	METAL CHIP	220	5%	1/10W
R707	1-216-813-11	METAL CHIP	220	5%	1/10W
R708	1-216-833-11	METAL CHIP	10K	5%	1/10W
R709	1-216-821-11	METAL CHIP	1K	5%	1/10W
R710	1-216-839-11	METAL CHIP	33K	5%	1/10W (EC99i)
R711	1-216-839-11	METAL CHIP	33K	5%	1/10W (EC99i)
R712	1-216-817-11	METAL CHIP	470	5%	1/10W (EC99i)
R713	1-216-845-11	METAL CHIP	100K	5%	1/10W (EC99i)
R714	1-216-842-11	METAL CHIP	56K	5%	1/10W (EC99i)
R715	1-216-809-11	METAL CHIP	100	5%	1/10W
R721	1-216-829-11	METAL CHIP	4.7K	5%	1/10W (EC99i)
R723	1-216-789-11	METAL CHIP	2.2	5%	1/10W
R724	1-249-395-11	CARBON	15	5%	1/4W
R725	1-249-395-11	CARBON	15	5%	1/4W
R726	1-249-395-11	CARBON	15	5%	1/4W
R727	1-216-829-11	METAL CHIP	4.7K	5%	1/10W
R728	1-216-829-11	METAL CHIP	4.7K	5%	1/10W
R729	1-216-821-11	METAL CHIP	1K	5%	1/10W
R730	1-216-841-11	METAL CHIP	47K	5%	1/10W (EC99i)
R731	1-216-809-11	METAL CHIP	100	5%	1/10W
R732	1-216-809-11	METAL CHIP	100	5%	1/10W
R733	1-216-845-11	METAL CHIP	100K	5%	1/10W (EC99i)
R734	1-216-821-11	METAL CHIP	1K	5%	1/10W (EC99i)
R735	1-216-864-11	SHORT CHIP	0 (EC99i)		
R736	1-216-833-11	METAL CHIP	10K	5%	1/10W (EC99i)
R737	1-216-833-11	METAL CHIP	10K	5%	1/10W (EC99i)
R738	1-216-821-11	METAL CHIP	1K	5%	1/10W (EC99i)
R739	1-216-821-11	METAL CHIP	1K	5%	1/10W (EC99i)
R740	1-216-823-11	METAL CHIP	1.5K	5%	1/10W (EC99i)
R741	1-216-789-11	METAL CHIP	2.2	5%	1/10W
R742	1-216-789-11	METAL CHIP	2.2	5%	1/10W
R744	1-216-797-11	METAL CHIP	10	5%	1/10W (EC99i)
R745	1-216-797-11	METAL CHIP	10	5%	1/10W (EC99i)
R746	1-249-403-11	CARBON	68	5%	1/4W (EC99i)
R747	1-249-403-11	CARBON	68	5%	1/4W (EC99i)
R748	1-249-403-11	CARBON	68	5%	1/4W (EC99i)
R749	1-216-829-11	METAL CHIP	4.7K	5%	1/10W
R750	1-216-829-11	METAL CHIP	4.7K	5%	1/10W
R751	1-216-830-11	METAL CHIP	5.6K	5%	1/10W
R752	1-216-830-11	METAL CHIP	5.6K	5%	1/10W
R753	1-216-830-11	METAL CHIP	5.6K	5%	1/10W
R754	1-216-830-11	METAL CHIP	5.6K	5%	1/10W
R755	1-216-829-11	METAL CHIP	4.7K	5%	1/10W (EC99i)
R756	1-216-829-11	METAL CHIP	4.7K	5%	1/10W (EC99i)
R757	1-216-841-11	METAL CHIP	47K	5%	1/10W (EC99i)
R758	1-216-821-11	METAL CHIP	1K	5%	1/10W
R759	1-216-805-11	METAL CHIP	47	5%	1/10W
R760	1-216-789-11	METAL CHIP	2.2	5%	1/10W
R761	1-216-817-11	METAL CHIP	470	5%	1/10W
R762	1-216-817-11	METAL CHIP	470	5%	1/10W
R763	1-216-827-11	METAL CHIP	3.3K	5%	1/10W
R764	1-216-827-11	METAL CHIP	3.3K	5%	1/10W
R765	1-216-827-11	METAL CHIP	3.3K	5%	1/10W
R766	1-216-833-11	METAL CHIP	10K	5%	1/10W (EC99i)
R767	1-216-791-11	METAL CHIP	3.3	5%	1/10W
R768	1-216-833-11	METAL CHIP	10K	5%	1/10W
R769	1-216-805-11	METAL CHIP	47	5%	1/10W
R770	1-216-845-11	METAL CHIP	100K	5%	1/10W
R771	1-218-879-11	METAL CHIP	22K	0.5%	1/10W
R772	1-218-879-11	METAL CHIP	22K	0.5%	1/10W
R773	1-218-879-11	METAL CHIP	22K	0.5%	1/10W
R774	1-218-879-11	METAL CHIP	22K	0.5%	1/10W
R775	1-218-879-11	METAL CHIP	22K	0.5%	1/10W
R776	1-218-879-11	METAL CHIP	22K	0.5%	1/10W
R777	1-218-879-11	METAL CHIP	22K	0.5%	1/10W
R778	1-218-879-11	METAL CHIP	22K	0.5%	1/10W
R779	1-216-829-11	METAL CHIP	4.7K	5%	1/10W
R780	1-216-823-11	METAL CHIP	1.5K	5%	1/10W
R781	1-216-845-11	METAL CHIP	100K	5%	1/10W
R782	1-216-833-11	METAL CHIP	10K	5%	1/10W
R783	1-216-845-11	METAL CHIP	100K	5%	1/10W
R784	1-216-845-11	METAL CHIP	100K	5%	1/10W
R785	1-216-845-11	METAL CHIP	100K	5%	1/10W
R786	1-216-845-11	METAL CHIP	100K	5%	1/10W
R787	1-216-835-11	METAL CHIP	15K	5%	1/10W
R788	1-216-835-11	METAL CHIP	15K	5%	1/10W
R791	1-216-845-11	METAL CHIP	100K	5%	1/10W
R792	1-216-849-11	METAL CHIP	220K	5%	1/10W
R793	1-216-827-11	METAL CHIP	3.3K	5%	1/10W
R794	1-216-833-11	METAL CHIP	10K	5%	1/10W
R795	1-216-848-11	METAL CHIP	180K	5%	1/10W
R796	1-216-851-11	METAL CHIP	330K	5%	1/10W

Ref. No.	Part No.	Description			Remark
R797	1-216-841-11	METAL CHIP	47K	5%	1/10W
R798	1-216-829-11	METAL CHIP	4.7K	5%	1/10W
R799	1-216-818-11	METAL CHIP	560	5%	1/10W
R801	1-216-809-11	METAL CHIP	100	5%	1/10W
R802	1-216-801-11	METAL CHIP	22	5%	1/10W
R803	1-216-825-11	METAL CHIP	2.2K	5%	1/10W
R804	1-216-801-11	METAL CHIP	22	5%	1/10W
R805	1-216-853-11	METAL CHIP	470K	5%	1/10W
R806	1-216-841-11	METAL CHIP	47K	5%	1/10W
R807	1-216-837-11	METAL CHIP	22K	5%	1/10W
R808	1-216-801-11	METAL CHIP	22	5%	1/10W
R809	1-216-809-11	METAL CHIP	100	5%	1/10W
R810	1-216-829-11	METAL CHIP	4.7K	5%	1/10W
R811	1-216-845-11	METAL CHIP	100K	5%	1/10W
R812	1-216-841-11	METAL CHIP	47K	5%	1/10W
R813	1-216-853-11	METAL CHIP	470K	5%	1/10W
R814	1-216-837-11	METAL CHIP	22K	5%	1/10W
R815	1-216-833-11	METAL CHIP	10K	5%	1/10W
R816	1-216-821-11	METAL CHIP	1K	5%	1/10W
R817	1-216-841-11	METAL CHIP	47K	5%	1/10W
R818	1-216-833-11	METAL CHIP	10K	5%	1/10W
R819	1-216-839-11	METAL CHIP	33K	5%	1/10W
R820	1-216-829-11	METAL CHIP	4.7K	5%	1/10W
R821	1-216-829-11	METAL CHIP	4.7K	5%	1/10W
R822	1-216-809-11	METAL CHIP	100	5%	1/10W
R823	1-216-833-11	METAL CHIP	10K	5%	1/10W
R824	1-216-817-11	METAL CHIP	470	5%	1/10W
R825	1-216-829-11	METAL CHIP	4.7K	5%	1/10W
R826	1-216-821-11	METAL CHIP	1K	5%	1/10W
R827	1-216-845-11	METAL CHIP	100K	5%	1/10W
R829	1-216-829-11	METAL CHIP	4.7K	5%	1/10W
R830	1-216-827-11	METAL CHIP	3.3K	5%	1/10W
R831	1-216-825-11	METAL CHIP	2.2K	5%	1/10W
R832	1-216-857-11	METAL CHIP	1M	5%	1/10W
R836	1-218-867-11	METAL CHIP	6.8K	0.5%	1/10W
R837	1-216-845-11	METAL CHIP	100K	5%	1/10W
R838	1-216-837-11	METAL CHIP	22K	5%	1/10W
R839	1-216-797-11	METAL CHIP	10	5%	1/10W
R840	1-216-864-11	SHORT CHIP	0		
R841	1-216-833-11	METAL CHIP	10K	5%	1/10W
R842	1-216-864-11	SHORT CHIP	0		
R843	1-216-845-11	METAL CHIP	100K	5%	1/10W
R844	1-216-825-11	METAL CHIP	2.2K	5%	1/10W
R845	1-216-864-11	SHORT CHIP	0		
R846	1-216-797-11	METAL CHIP	10	5%	1/10W
R847	1-216-864-11	SHORT CHIP	0		
R860	1-216-833-11	METAL CHIP	10K	5%	1/10W (EC99i)
R861	1-216-833-11	METAL CHIP	10K	5%	1/10W (EC99i)
R862	1-216-833-11	METAL CHIP	10K	5%	1/10W (EC99i)
R863	1-216-833-11	METAL CHIP	10K	5%	1/10W (EC99i)
R864	1-216-829-11	METAL CHIP	4.7K	5%	1/10W (EC99i)
R865	1-216-841-11	METAL CHIP	47K	5%	1/10W (EC99i)
R866	1-216-833-11	METAL CHIP	10K	5%	1/10W (EC99i)
R867	1-216-827-11	METAL CHIP	3.3K	5%	1/10W (EC99i)
R868	1-216-823-11	METAL CHIP	1.5K	5%	1/10W (EC99i)
R869	1-216-833-11	METAL CHIP	10K	5%	1/10W (EC99i)
R870	1-216-833-11	METAL CHIP	10K	5%	1/10W (EC99i)
R875	1-216-864-11	SHORT CHIP	0 (EC69i/EC79i)		
R876	1-216-805-11	METAL CHIP	47	5%	1/10W
R878	1-216-864-11	SHORT CHIP	0 (EC99i)		
R880	1-216-821-11	METAL CHIP	1K	5%	1/10W (EC99i)
R881	1-216-825-11	METAL CHIP	2.2K	5%	1/10W (EC99i)
R882	1-216-821-11	METAL CHIP	1K	5%	1/10W (EC99i)
R883	1-216-842-11	METAL CHIP	56K	5%	1/10W (EC79i: UK, AUS/EC99i)
R883	1-216-843-11	METAL CHIP	68K	5%	1/10W (EC79i: US, CND)
R883	1-216-844-11	METAL CHIP	82K	5%	1/10W (EC69i)
R884	1-216-864-11	SHORT CHIP	0		
		< RELAY >			
RY601	1-755-307-21	RELAY (EC79i/EC99i)			
RY602	1-755-307-21	RELAY			
RY701	1-755-307-21	RELAY (EC99i)			
		< TRANSFORMER >			
T801	1-433-741-11	TRANSFORMER, IF			
		< TERMINAL >			
TB601	1-780-685-11	TERMINAL BOARD (SPEAKER HIGH FREQ. IMPEDANCE: USE 8Ω) (EC79i/EC99i)			
TB602	1-780-314-11	TERMINAL BOARD (SPEAKER IMPEDANCE: USE 6Ω) (EC69i)			
TB602	1-780-314-11	TERMINAL BOARD (SPEAKER LOW FREQ. IMPEDANCE: USE 8Ω) (EC79i/EC99i)			
TB603	1-780-684-11	TERMINAL BOARD, 2P (SUBWOOFER IMPEDANCE: USE 4Ω) (EC99i)			
		< VIBRATOR >			
X801	1-813-917-11	VIBRATOR, CRYSTAL (75kHz)			

****

	A-1599-065-A	PANEL BOARD, COMPLETE (EC99i: US, CND)
	A-1599-078-A	PANEL BOARD, COMPLETE (EC99i: AUS)
	A-1599-084-A	PANEL BOARD, COMPLETE (EC79i: US, CND)
	A-1599-090-A	PANEL BOARD, COMPLETE (EC79i: UK)
	A-1599-094-A	PANEL BOARD, COMPLETE (EC79i: AUS)
	A-1599-116-A	PANEL BOARD, COMPLETE (EC69i: US, CND)
	A-1599-133-A	PANEL BOARD, COMPLETE (EC69i: UK)
	A-1599-136-A	PANEL BOARD, COMPLETE (EC69i: AUS)
	A-1731-204-A	PANEL BOARD, COMPLETE (EC99i: UK)
		**********
	2-649-178-01	PLATE, LIGHT GUIDE
	2-649-179-01	SHEET (LCD)
	2-665-175-01	SHEET (REFLECTOR)
		< CAPACITOR >

C301	1-164-156-11	CERAMIC CHIP	0.1uF		25V
C302	1-104-658-91	ELECT	100uF	20%	10V

Ref. No.	Part No.	Description				Remark
C303	1-126-964-11	ELECT	10uF	20%	50V	
C304	1-100-597-91	CERAMIC CHIP	0.1uF	10%	25V	
C305	1-126-964-11	ELECT	10uF	20%	50V	
C306	1-104-655-91	ELECT	470uF	20%	6.3V	
C313	1-115-467-11	CERAMIC CHIP	0.22uF	10%	10V	
C317	1-162-964-11	CERAMIC CHIP	0.001uF	10%	50V	
C319	1-162-918-11	CERAMIC CHIP	18PF	5%	50V	
C320	1-162-919-11	CERAMIC CHIP	22PF	5%	50V	
C321	1-164-156-11	CERAMIC CHIP	0.1uF		25V	
C330	1-164-156-11	CERAMIC CHIP	0.1uF		25V	
C332	1-162-970-11	CERAMIC CHIP	0.01uF	10%	25V	
C336	1-164-156-11	CERAMIC CHIP	0.1uF		25V	
C338	1-162-964-11	CERAMIC CHIP	0.001uF	10%	50V	
C340	1-164-156-11	CERAMIC CHIP	0.1uF		25V	
C341	1-164-156-11	CERAMIC CHIP	0.1uF		25V	
C342	1-162-964-11	CERAMIC CHIP	0.001uF	10%	50V	
C351	1-164-156-11	CERAMIC CHIP	0.1uF		25V	(EC79i: UK, AUS/EC99i)
C352	1-126-964-11	ELECT	10uF	20%	50V	(EC79i: UK, AUS/EC99i)
C353	1-164-156-11	CERAMIC CHIP	0.1uF		25V	(EC79i: UK, AUS/EC99i)
C354	1-162-968-11	CERAMIC CHIP	0.0047uF	10%	50V	(EC69i: UK, AUS/EC79i: UK, AUS/EC99i: UK, AUS)
C355	1-162-968-11	CERAMIC CHIP	0.0047uF	10%	50V	(EC69i: UK, AUS/EC79i: UK, AUS/EC99i: UK, AUS)
C357	1-126-965-91	ELECT	22uF	20%	50V	(EC79i: UK, AUS/EC99i)
C434	1-162-970-11	CERAMIC CHIP	0.01uF	10%	25V	
C669	1-126-923-91	ELECT	220uF	20%	10V	
C671	1-126-933-11	ELECT	100uF	20%	16V	
C673	1-126-925-91	ELECT	470uF	20%	10V	
C675	1-126-960-11	ELECT	1uF	20%	50V	
C676	1-126-960-11	ELECT	1uF	20%	50V	
C703	1-162-966-11	CERAMIC CHIP	0.0022uF	10%	50V	
C704	1-162-962-11	CERAMIC CHIP	470PF	10%	50V	
		< CONNECTOR >				
CN301	1-784-747-11	CONNECTOR, FFC 25P				
CN302	1-784-727-11	CONNECTOR, FFC 5P (EC79i: UK, AUS/EC99i)				
CN303	1-824-027-21	HOLDER, CABLE 3P				
CN608	1-779-289-11	CONNECTOR, FFC (LIF (NON-ZIF)) 21P				
		< DIODE >				
D301	6-501-722-01	DIODE MAZ8043GMLS0				
D302	6-501-817-01	DIODE MA2J1110GLS0				
D303	6-500-334-01	DIODE MC2836-T112-1				
D304	6-501-817-01	DIODE MA2J1110GLS0				
D305	6-501-479-01	LED 1L0341Y23E0CA602 (STANDBY)				(EC69i/EC79i: US, CND)
D305	6-502-773-01	LED SELG2WA10C LF62 (STANDBY)				(EC79i: UK, AUS/EC99i)
D306	6-501-582-01	DIODE 1N4002-A2 (EC79i: UK, AUS/EC99i)				
D307	6-501-817-01	DIODE MA2J1110GLS0 (EC79i: UK, AUS/EC99i)				
D618	6-501-719-01	DIODE MAZ8039GHLS0				
D619	6-501-582-01	DIODE 1N4002-A2				
D620	6-501-582-01	DIODE 1N4002-A2				

Ref. No.	Part No.	Description				Remark
		< IC >				
IC301	A-1711-704-A	IC MB90F830PF-GE1 (for SERVICE)				(EC79i: UK, AUS/EC99i)
IC301	A-1711-705-A	IC MB90F830PF-GE1 (for SERVICE)				(EC69i/EC79i: US, CND)
IC302	6-600-349-21	IC NJL23H400A				
IC303	8-759-598-69	IC BA6956AN (EC79i: UK, AUS/EC99i)				
		< LIQUID CRYSTAL DISPLAY >				
LCD301	1-802-840-11	DISPLAY PANEL, LIQUID CRYSTAL				(EC69i/EC79i: US, CND)
LCD301	1-802-841-11	DISPLAY PANEL, LIQUID CRYSTAL				(EC79i: UK, AUS/EC99i)
		< TRANSISTOR >				
Q301	8-729-120-28	TRANSISTOR	2SC1623-L5L6			
Q302	8-729-037-13	TRANSISTOR	KTA1271Y			
Q303	8-729-120-28	TRANSISTOR	2SC1623-L5L6			
Q304	8-729-120-28	TRANSISTOR	2SC1623-L5L6			
Q305	8-729-120-28	TRANSISTOR	2SC1623-L5L6			
Q306	8-729-038-28	TRANSISTOR	RT1N441C-TP-1			
Q307	8-729-038-28	TRANSISTOR	RT1N441C-TP-1			(EC79i: UK, AUS/EC99i)
Q622	8-729-120-28	TRANSISTOR	2SC1623-L5L6			
Q624	8-729-036-86	TRANSISTOR	KTC3203Y-AT			
		< RESISTOR >				
R301	1-216-809-11	METAL CHIP	100	5%	1/10W	
R302	1-216-809-11	METAL CHIP	100	5%	1/10W	
R303	1-216-809-11	METAL CHIP	100	5%	1/10W	
R304	1-216-809-11	METAL CHIP	100	5%	1/10W	
R305	1-216-809-11	METAL CHIP	100	5%	1/10W	
R306	1-216-809-11	METAL CHIP	100	5%	1/10W	
R307	1-216-809-11	METAL CHIP	100	5%	1/10W	
R308	1-216-809-11	METAL CHIP	100	5%	1/10W	
R309	1-216-809-11	METAL CHIP	100	5%	1/10W	
R310	1-216-809-11	METAL CHIP	100	5%	1/10W	
R311	1-216-809-11	METAL CHIP	100	5%	1/10W	
R312	1-216-809-11	METAL CHIP	100	5%	1/10W	
R313	1-216-809-11	METAL CHIP	100	5%	1/10W	
R314	1-216-809-11	METAL CHIP	100	5%	1/10W	
R315	1-216-809-11	METAL CHIP	100	5%	1/10W	
R317	1-216-809-11	METAL CHIP	100	5%	1/10W	
R318	1-216-809-11	METAL CHIP	100	5%	1/10W	
R319	1-216-809-11	METAL CHIP	100	5%	1/10W	
R320	1-216-809-11	METAL CHIP	100	5%	1/10W	
R321	1-216-809-11	METAL CHIP	100	5%	1/10W	
R322	1-216-809-11	METAL CHIP	100	5%	1/10W	
R323	1-216-809-11	METAL CHIP	100	5%	1/10W	
R324	1-216-809-11	METAL CHIP	100	5%	1/10W	
R325	1-216-797-11	METAL CHIP	10	5%	1/10W	
R326	1-216-809-11	METAL CHIP	100	5%	1/10W	
R327	1-216-809-11	METAL CHIP	100	5%	1/10W	
R328	1-216-833-11	METAL CHIP	10K	5%	1/10W	
R329	1-216-825-11	METAL CHIP	2.2K	5%	1/10W	
R330	1-216-819-11	METAL CHIP	680	5%	1/10W	
R331	1-216-845-11	METAL CHIP	100K	5%	1/10W	
R332	1-216-833-11	METAL CHIP	10K	5%	1/10W	
R333	1-216-845-11	METAL CHIP	100K	5%	1/10W	
R334	1-216-827-11	METAL CHIP	3.3K	5%	1/10W	
R335	1-216-837-11	METAL CHIP	22K	5%	1/10W	

Ref. No.	Part No.	Description			Remark
R336	1-216-833-11	METAL CHIP	10K	5%	1/10W
R337	1-216-813-11	METAL CHIP	220	5%	1/10W
R362	1-216-837-11	METAL CHIP	22K	5%	1/10W
R363	1-216-837-11	METAL CHIP	22K	5%	1/10W
R369	1-216-821-11	METAL CHIP	1K	5%	1/10W
R370	1-216-821-11	METAL CHIP	1K	5%	1/10W
R376	1-216-833-11	METAL CHIP	10K	5%	1/10W
R377	1-216-833-11	METAL CHIP	10K	5%	1/10W
R378	1-216-839-11	METAL CHIP	33K	5%	1/10W
R379	1-216-843-11	METAL CHIP	68K	5%	1/10W
R380	1-216-817-11	METAL CHIP	470	5%	1/10W
R381	1-216-833-11	METAL CHIP	10K	5%	1/10W
R382	1-216-833-11	METAL CHIP	10K	5%	1/10W
R383	1-216-833-11	METAL CHIP	10K	5%	1/10W
R384	1-216-833-11	METAL CHIP	10K	5%	1/10W
R385	1-216-821-11	METAL CHIP	1K	5%	1/10W
R386	1-216-821-11	METAL CHIP	1K	5%	1/10W
R387	1-216-821-11	METAL CHIP	1K	5%	1/10W
R389	1-216-821-11	METAL CHIP	1K	5%	1/10W (EC69i/EC79i: UK, AUS)
R389	1-216-825-11	METAL CHIP	2.2K	5%	1/10W (EC99i)
R389	1-216-828-11	METAL CHIP	3.9K	5%	1/10W (EC79i: US, CND)
R390	1-216-833-11	METAL CHIP	10K	5%	1/10W (EC79i/EC99i)
R391	1-216-821-11	METAL CHIP	1K	5%	1/10W (EC69i: UK/EC79i: UK/EC99i: UK)
R391	1-216-825-11	METAL CHIP	2.2K	5%	1/10W (EC69i: AUS/EC79i: AUS/EC99i: AUS)
R392	1-216-833-11	METAL CHIP	10K	5%	1/10W (EC69i: US, CND, AUS/EC79i: US, CND, AUS/ EC99i: US, CND, AUS)
R396	1-216-851-11	METAL CHIP	330K	5%	1/10W
R400	1-216-821-11	METAL CHIP	1K	5%	1/10W
R401	1-216-821-11	METAL CHIP	1K	5%	1/10W
R402	1-216-845-11	METAL CHIP	100K	5%	1/10W
R412	1-216-822-11	METAL CHIP	1.2K	5%	1/10W
R413	1-216-823-11	METAL CHIP	1.5K	5%	1/10W
R414	1-216-825-11	METAL CHIP	2.2K	5%	1/10W
R415	1-216-826-11	METAL CHIP	2.7K	5%	1/10W
R416	1-216-828-11	METAL CHIP	3.9K	5%	1/10W
R417	1-218-867-11	METAL CHIP	6.8K	0.5%	1/10W (EC79i: UK, AUS/EC99i)
R418	1-216-835-11	METAL CHIP	15K	5%	1/10W (EC99i)
R419	1-216-838-11	METAL CHIP	27K	5%	1/10W
R420	1-216-845-11	METAL CHIP	100K	5%	1/10W
R421	1-216-833-11	METAL CHIP	10K	5%	1/10W
R422	1-216-829-11	METAL CHIP	4.7K	5%	1/10W
R433	1-216-809-11	METAL CHIP	100	5%	1/10W
R434	1-216-809-11	METAL CHIP	100	5%	1/10W
R441	1-216-833-11	METAL CHIP	10K	5%	1/10W (EC79i: UK, AUS/EC99i)
R442	1-216-837-11	METAL CHIP	22K	5%	1/10W (EC79i: UK, AUS/EC99i)
R443	1-216-833-11	METAL CHIP	10K	5%	1/10W (EC79i: UK, AUS/EC99i)
R444	1-216-829-11	METAL CHIP	4.7K	5%	1/10W (EC79i: UK, AUS/EC99i)
R445	1-216-829-11	METAL CHIP	4.7K	5%	1/10W (EC79i: UK, AUS/EC99i)
R446	1-216-846-11	METAL CHIP	120K	5%	1/10W (EC79i: UK, AUS/EC99i)
R447	1-216-835-11	METAL CHIP	15K	5%	1/10W (EC79i: UK, AUS/EC99i)
R448	1-216-833-11	METAL CHIP	10K	5%	1/10W
R449	1-216-805-11	METAL CHIP	47	5%	1/10W
R450	1-216-822-11	METAL CHIP	1.2K	5%	1/10W
R452	1-216-839-11	METAL CHIP	33K	5%	1/10W
R716	1-216-821-11	METAL CHIP	1K	5%	1/10W
R717	1-249-403-11	CARBON	68	5%	1/4W
R718	1-249-403-11	CARBON	68	5%	1/4W
R719	1-249-403-11	CARBON	68	5%	1/4W
R720	1-216-837-11	METAL CHIP	22K	5%	1/10W
R722	1-216-809-11	METAL CHIP	100	5%	1/10W
		< ROTARY ENCODER >			
S301	1-786-417-11	ENCODER, ROTARY (VOLUME)			
		< SWITCH >			
SW301	1-771-410-21	SWITCH, TACTILE (I/⏻) (EC79i: UK, AUS/EC99i)			
SW302	1-771-410-21	SWITCH, TACTILE (DISPLAY) (EC79i: UK, AUS/EC99i)			
SW303	1-771-410-21	SWITCH, TACTILE (I/⏻) (EC69i/EC79i: US, CND)			
SW313	1-771-410-21	SWITCH, TACTILE (– TUNING, ⏮ ◀◀)			
SW314	1-771-410-21	SWITCH, TACTILE (▶II)			
SW315	1-771-410-21	SWITCH, TACTILE (FOLDER –)			
SW316	1-771-410-21	SWITCH, TACTILE (FUNCTION) (EC69i/EC79i: US, CND)			
SW316	1-771-410-21	SWITCH, TACTILE (EQ) (EC79i: UK, AUS/EC99i)			
SW317	1-771-410-21	SWITCH, TACTILE (FUNCTION) (EC79i: UK, AUS/EC99i)			
SW318	1-771-410-21	SWITCH, TACTILE (SUBWOOFER ON/OFF) (EC99i)			
		< VIBRATOR >			
X301	1-814-067-11	OSCILLATOR, CRYSTAL (32.768kHz)			
X302	1-813-548-31	VIBRATOR, CERAMIC (6MHz)			

****

PT-SINGLE BOARD
****

Ref. No.	Part No.	Description			Remark
		< CAPACITOR >			
C001	1-165-621-91	CERAMIC CHIP	0.1uF		50V
		< CONNECTOR >			
CN002	1-820-973-11	HOLDER, CABLE 10P (EC99i)			
CN003	1-819-972-11	HOLDER, CABLE 8P (EC69i/EC79i)			
* CN004	1-568-226-11	PIN, CONNECTOR (3.96mm PITCH) 2P			
		< DIODE >			
D001	6-500-334-01	DIODE MC2836-T112-1			
D002	6-500-335-01	DIODE MC2838-T112-1			
D003	6-500-335-01	DIODE MC2838-T112-1			
		< TRANSFORMER >			
⚠ PT001	1-445-563-11	TRANSFORMER, POWER (EC69i: US, CND/ EC79i: US, CND/EC99i: US, CND)			
⚠ PT002	1-443-912-11	TRANSFORMER, POWER (EC69i: UK/EC79i: UK/EC99i: UK)			
⚠ PT003	1-445-105-11	TRANSFORMER, POWER (EC69i: AUS/EC79i: AUS/EC99i: AUS)			

Ref. No.	Part No.	Description	Remark
		< RELAY >	
⚠ RY001	1-755-334-11	RELAY, AC POWER	

****

		REG BOARD **********	
		< CAPACITOR >	
C698	1-100-566-91	CERAMIC CHIP 0.1uF 10% 25V	
		< IC >	
IC601	6-713-032-01	IC KIA7809API-U/PF	
		< CABLE HOLDER >	
W610	1-824-027-21	HOLDER, CABLE 3P	

****

		MISCELLANEOUS **********	
102	1-452-899-11	MAGNET (EC69i/EC79i: US, CND)	
⚠ 113	8-820-126-02	OPTICAL PICK-UP BLOCK (KSM-213CDP/C2NP)	(EC69i/EC79i: US, CND)
114	1-834-268-21	WIRE (FLAT TYPE) (16 CORE)	(EC69i/EC79i: US, CND)
154	1-836-761-21	CABLE, FLEXIBLE FLAT (5 CORE)	(EC79i: UK, AUS/EC99i)
155	A-1579-622-A	CDM76A ASSY (EC79i: UK, AUS/EC99i)	
⚠ 157	A-4735-357-A	BASE ASSY, OP (KSM-213D)	(EC79i: UK, AUS/EC99i)
161	1-832-404-21	CABLE, FLEXIBLE FLAT (16 CORE)	(EC79i: UK, AUS/EC99i)
204	1-832-804-21	CABLE, FLEXIBLE FLAT (7 CORE) (EC69i)	
204	1-832-815-21	CABLE, FLEXIBLE FLAT (9 CORE) (EC79i/EC99i)	
208	1-836-760-21	CABLE, FLEXIBLE FLAT (21 CORE)	(EC69i/EC79i: US, CND)
208	1-836-762-21	CABLE, FLEXIBLE FLAT (21 CORE)	(EC79i: UK, AUS/EC99i)
209	1-832-896-21	CABLE, FLEXIBLE FLAT (25 CORE) (EC69i)	
209	1-832-897-21	CABLE, FLEXIBLE FLAT (25 CORE) (EC79i/EC99i)	
256	1-836-763-21	CABLE, FLEXIBLE FLAT (11 CORE) (EC79i/EC99i)	
256	1-836-766-21	CABLE, FLEXIBLE FLAT (11 CORE) (EC69i)	
⚠ 304	1-834-965-22	CORD, POWER (US, CND)	
⚠ 304	1-834-966-41	POWER-SUPPLY CORD (UK)	
⚠ 304	1-834-967-21	CORD, POWER (AUS)	
306	1-831-744-21	CABLE, FLEXIBLE FLAT (5 CORE) (EC69i)	
⚠ 353	1-834-965-22	CORD, POWER (US, CND)	
⚠ 353	1-834-966-41	POWER-SUPPLY CORD (UK)	
⚠ 353	1-834-967-21	CORD, POWER (AUS)	
401	1-832-806-21	CABLE, FLEXIBLE FLAT (7 CORE) (EC99i)	
403	1-831-744-21	CABLE, FLEXIBLE FLAT (5 CORE) (EC99i)	
406	1-832-795-21	CABLE, FLEXIBLE FLAT (5 CORE) (EC79i)	
M601	1-787-319-12	FAN, DC (EC69i)	
M601	1-787-344-11	FAN, DC (EC79i/EC99i)	
⚠ PT004	1-445-562-11	TRANSFORMER, POWER (EC69i: UK)	
⚠ PT004	1-445-564-11	TRANSFORMER, POWER (EC69i: US, CND)	
⚠ PT004	1-445-574-11	TRANSFORMER, POWER (EC69i: AUS)	
⚠ PT005	1-445-565-11	TRANSFORMER, POWER	(EC79i: US, CND/EC99i: US, CND)
⚠ PT005	1-445-566-11	TRANSFORMER, POWER (EC79i: UK/EC99i: UK)	
⚠ PT005	1-445-569-11	TRANSFORMER, POWER	(EC79i: AUS/EC99i: AUS)
S201	1-771-853-11	SWITCH, DETECTION (LIMIT)	
SW750	1-692-960-11	SWITCH, PUSH (1 KEY) (CD LID OPEN/ CLOSE DETECT) (EC69i/EC79i: US, CND)	

****

		ACCESSORY **********	
⚠	1-770-019-71	ADAPTOR, CONVERSION PLUG 3P (UK)	

REVISION HISTORY

Checking the version allows you to jump to the revised page.
Also, clicking the version at the top of the revised page allows you to jump to the next revised page.

Ver.	Date	Description of Revision
1.0	2009.02	New
1.1	2009.05	Addition of UK model (HCD-EC99i) (SMR-09015)