WM 2X00IN TECHNICAL VALUES - GT3 (GT3, GT3 RS) > TECHNICAL VALUES

Location	Description	Type	Basic value	Tolerance 1	Tolerance 2
Fuel tank to body	Screw, M8 x 40	Tightening torque	23 Nm (17 ftlb.)		
Filler neck to body	Screw, M6	Tightening torque	10 Nm (7.5 ftlb.)		
Carbon canister to body	M6	Tightening torque	10 Nm (7.5 ftlb.)		
Fuel pump control unit to battery console	Hexagon speed nut	Tightening torque	2.5 Nm (2 ftlb.)		
Intake-air distributor to cylinder head	External Torx screw, M6 x 35	Tightening torque	13 Nm (9.5 ftlb.)		
Clamp securing resonance tube	External Torx screw, M6 x 30	Tightening torque	3 Nm (2 ftlb.)		
Line bracket to intake-air distributor	External Torx screw, M6 x 12	Tightening torque	13 Nm (9.5 ftlb.)		
Vacuum unit to resonance tube	Self-tapping screw, internal Torx	Tightening torque	5 Nm (3.5 ftlb.)		
Tank vent valve holder to intake-air distributor	External Torx screw, M6 x 12 (2x)	Tightening torque	13 Nm (9.5 ftlb.)		
Intake manifold pressure sensor to intake-air distributor	Oval-head screw, 6.0 x 15	Tightening torque	3 Nm (2 ftlb.)		
Throttle housing to intake-air distributor	External Torx screw, M6 x 50	Tightening torque	10 Nm (7.5 ftlb.)		
Cable duct to intake-air distributor	External Torx screw, M6 x 16	Tightening torque	13 Nm (9.5 ftlb.)		
Rubber shroud to throttle housing	Screw-type clamp	Tightening torque	3 Nm (2 ftlb.)		
Air cleaner housing to body	Hexagon-head bolt with washer, M6 x 25	Tightening torque	7 Nm (5 ftlb.)		

Air cleaner housing cover	Tapping screws	Tightening torque	3 Nm (2 ftlb.)	
DME control unit holder to body	M6 collar nut	Tightening torque	9 Nm (6.5 ftlb.)	
Oxygen sensors for pre-and post-catalytic converters	M18 x 1.5 thread - grease with Optimol Paste MF	Tightening torque	50 Nm (37 ftlb.)	+/-8 Nm (+/-6 ftlb.)
High-pressure pump to cylinder head	External Torx screw, M6 x 25	Initial tightening	7 Nm (5 ftlb.)	
High-pressure pump to cylinder head	External Torx screw, M6 x 25	Final tightening torque angle	30°	+/-3°
Union nut for high-pressure line	Coat thread with OKS 1710 and leave to dry off	Tightening torque	25 Nm (19 ftlb.)	
Fuel line holding clamp to holder	External Torx screw, M6 x 12	Tightening torque	10 Nm (7.5 ftlb.)	
High-pressure sensor to fuel collection pipe	M10 - grease thread and cone with MicroGleitDF 977 S	Tightening torque	22 Nm (16 ftlb.)	
Fuel collection pipe to cylinder head	External Torx screw, M6 x 16	Tightening torque	13 Nm (9.5 ftlb.)	
Low-pressure fuel line holder to intake-air distributor	External Torx screw, M8 x 12	Tightening torque	12 Nm (9 ftlb.)	
Holder for exhaust flap control valve to intake-air distributor	External Torx screw, M6 x 12	Tightening torque	13 Nm (9.5 ftlb.)	
Holder for vacuum reservoir on cylinder bank 4-6	Cheese head bolt, M6 x 12	Tightening torque	10 Nm (7.5 ftlb.)	
Secondary-air pump holder to intake-air distributor for bank 1-3	Screw, M6 x 16	Tightening torque	13 Nm (9.5 ftlb.)	
Rear air guide to body	Hexagon nut, M6	Tightening torque	10 Nm (7.5 ftlb.)	
Air guide to air cleaner housing	Screw-type clamp	Tightening torque	3 Nm (2 ftlb.)	

Air guide in rear wheel housing	M6 screw	Tightening torque	10 Nm (7.5 ftlb.)
Connecting piece for air guide in side panel	Tapping screw	Tightening torque	3 Nm (2 ftlb.)
Exhaust manifold to cylinder head	Hexagon nut, M8 - always replace	Tightening torque	30 Nm (22 ftlb.)
Exhaust manifold to front silencer	Screw, M8 x 50 - replace	Tightening torque	23 Nm (17 ftlb.)
Front silencer holder to cylinder head cover	External Torx screw, M8 x 20	Tightening torque	23 Nm (17 ftlb.)
Front silencer to holder	Collar nut, M8 - replace	Tightening torque	23 Nm (17 ftlb.)
Front silencer to rear silencer	Collar nut, M8 - replace	Tightening torque	23 Nm (17 ftlb.)
Clamp on rear silencer	Cheese head bolt, M8 x 50 - replace	Tightening torque	23 Nm (17 ftlb.)
Tailpipe to rear silencer	Hexagon nut, M8	Tightening torque	23 Nm (17 ftlb.)
Heat shield to cylinder head cover	External Torx screw, M6 x 12	Tightening torque	13 Nm (9.5 ftlb.)
Retaining frame with heat protection to body	Collar nut, M6	Tightening torque	7 Nm (5 ftlb.)
Heat protection for retaining frame to heat protection on bumper	Tapping screw, 4.8 x 19	Tightening torque	3 Nm (2 ftlb.)
Tapping screw for retaining frame with heat protection - GT3 RS	Tapping screw	Tightening torque	3 Nm (2 ftlb.)
Screw for retaining frame with heat protection - GT3 RS	M6 screw	Tightening torque	10 Nm (7.5 ftlb.)
Secondary-air pump to bracket	External Torx screw, M6 x 12	Tightening torque	13 Nm (9.5 ftlb.)
Secondary-air pump holder to crankcase	External Torx screw, M6 x 25	Tightening torque	13 Nm (9.5 ftlb.)

Secondary-air pump bracket to holder	External Torx screw, M6 x 16	Tightening torque	13 Nm (9.5 ftlb.)
Secondary-air pump bracket to intake-air distributor 1-3	External Torx screw, M6 x 16	Tightening torque	13 Nm (9.5 ftlb.)
Secondary-air lines to cylinder head	External Torx screw, M6 x 16	Tightening torque	13 Nm (9.5 ftlb.)
Secondary air valve to line	External Torx screw, M6 x 30	Tightening torque	13 Nm (9.5 ftlb.)
Secondary-air line to holder	External Torx screw, M6 x 12	Tightening torque	13 Nm (9.5 ftlb.)
Secondary-air line to oil guide	External Torx screw, M6 x 12	Tightening torque	13 Nm (9.5 ftlb.)
Retaining bar on cowl panel frame or battery console	Collar nut, M8	Tightening torque	23 Nm (17 ftlb.)
Terminal clamp to battery terminal	M6 nut	Tightening torque	6 Nm (4.5 ftlb.)
Ground lead of battery to cowl panel frame	Collar nut, M8	Tightening torque	15 Nm (11 ftlb.)
Rail on battery console	Hexagon-head bolt, M8	Tightening torque	23 Nm (17 ftlb.)
Battery console to holder	Hexagon-head bolt, M8	Tightening torque	23 Nm (17 ftlb.)
Holder for battery console to body	Hexagon-head bolt, M8	Tightening torque	23 Nm (17 ftlb.)
Generator to bracket	External Torx screw, M8 x 90	Tightening torque	15 Nm (11 ftlb.)
Starter to crankcase	External Torx screw, M10 x 35	Tightening torque	45 Nm (33 ftlb.)
Starter cable to terminal 50	Hexagon nut, M6 or hexagon-head bolt, M6	Tightening torque	7 Nm (5 ftlb.)
B+ line to starter	Collar nut, M8	Tightening torque	18 Nm (13 ftlb.)
B+ line to generator	Collar nut, M8	Tightening torque	18 Nm (13 ftlb.)
Hall sender to cylinder head	Internal Torx screw, M6 x 16	Tightening torque	10 Nm (7.5 ftlb.)

Knock sensor to crankcase	External Torx screw, M8 x 35	Tightening torque	23 Nm (17 ftlb.)	+/-2 Nm (+/-1.5 ftlb.)	
Ignition coil to cylinder head cover	Internal Torx screw, M6 x 16	Tightening torque	10 Nm (7.5 ftlb.)		
Ground cable for ignition coils to cylinder head cover	Cheese head bolt, M6 x 12	Tightening torque	10 Nm (7.5 ftlb.)		
Spark plug	Initial tightening	Tightening torque	32 Nm (24 ftlb.)	+/-2 Nm (+/-1.5 ftlb.)	
Spark plug	Second tightening	Tightening torque	25 Nm (19 ftlb.)	+3 Nm (+2 ftlb.)	
Oil-pressure sender to crankcase	Internal Torx screw, M6 x 20	Tightening torque	13 Nm (9.5 ftlb.)		
Oil-level sender to oil tank	Hexagon nut, M6	Tightening torque	10 Nm (7.5 ftlb.)		
Control valve to oil guide module	External Torx screw, M6 x 16	Tightening torque	13 Nm (9.5 ftlb.)		
Pulse sender to transmission flange	Cheese head bolt, M6 x 16	Tightening torque	10 Nm (7.5 ftlb.)		

WM 2X00IN TECHNICAL VALUES - GT3 (GT3, GT3 RS) > INFORMATION > GROUP 20 - FUEL SUPPLY, ACTUATOR

Location	Description	Type	Basic value	Tolerance 1	Tolerance 2
Fuel tank to body	Screw, M8 x 40	Tightening torque	23 Nm (17 ftlb.)		
Filler neck to body	Screw, M6	Tightening torque	10 Nm (7.5 ftlb.)		
Carbon canister to body	M6	Tightening torque	10 Nm (7.5 ftlb.)		
Fuel pump control unit to battery console	Hexagon speed nut	Tightening torque	2.5 Nm (2 ftlb.)		

WM 2X00IN TECHNICAL VALUES - GT3 (GT3, GT3 RS) > INFORMATION > GROUP 24 - FUEL SYSTEM - ELECTRONIC INJECTION

Location	Description	Type	Basic value	Tolerance 1	Tolerance 2
Intake-air distributor to cylinder head	External Torx screw, M6 x 35	Tightening torque	13 Nm (9.5 ftlb.)		

Clamp securing resonance tube	External Torx screw, M6 x 30	Tightening torque	3 Nm (2 ftlb.)	
Line bracket to intake-air distributor	External Torx screw, M6 x 12	Tightening torque	13 Nm (9.5 ftlb.)	
Vacuum unit to resonance tube	Self-tapping screw, internal Torx	Tightening torque	5 Nm (3.5 ftlb.)	
Tank vent valve holder to intake-air distributor	External Torx screw, M6 x 12 (2x)	Tightening torque	13 Nm (9.5 ftlb.)	
Intake manifold pressure sensor to intake-air distributor	Oval-head screw, 6.0 x 15	Tightening torque	3 Nm (2 ftlb.)	
Throttle housing to intake-air distributor	External Torx screw, M6 x 50	Tightening torque	10 Nm (7.5 ftlb.)	
Cable duct to intake-air distributor	External Torx screw, M6 x 16	Tightening torque	13 Nm (9.5 ftlb.)	
Rubber shroud to throttle housing	Screw-type clamp	Tightening torque	3 Nm (2 ftlb.)	
Air cleaner housing to body	Hexagon-head bolt with washer, M6 x 25	Tightening torque	7 Nm (5 ftlb.)	
Air cleaner housing cover	Tapping screws	Tightening torque	3 Nm (2 ftlb.)	
DME control unit holder to body	M6 collar nut	Tightening torque	9 Nm (6.5 ftlb.)	
Oxygen sensors for pre-and post-catalytic converters	M18 x 1.5 thread - grease with Optimol Paste MF	Tightening torque	50 Nm (37 ftlb.)	+/-8 Nm (+/-6 ftlb.)
High-pressure pump to cylinder head	External Torx screw, M6 x 25	Initial tightening	7 Nm (5 ftlb.)	
High-pressure pump to cylinder head	External Torx screw, M6 x 25	Final tightening torque angle	30°	+/-3°
Union nut for high-pressure line	Coat thread with OKS 1710 and leave to dry off	Tightening torque	25 Nm (19 ftlb.)	

Fuel line holding clamp to holder	External Torx screw, M6 x 12	Tightening torque	10 Nm (7.5 ftlb.)
High-pressure sensor to fuel collection pipe	M10 - grease thread and cone with MicroGleitDF 977 S	Tightening torque	22 Nm (16 ftlb.)
Fuel collection pipe to cylinder head	External Torx screw, M6 x 16	Tightening torque	13 Nm (9.5 ftlb.)
Low-pressure fuel line holder to intake-air distributor	External Torx screw, M8 x 12	Tightening torque	12 Nm (9 ftlb.)
Holder for exhaust flap control valve to intake-air distributor	External Torx screw, M6 x 12	Tightening torque	13 Nm (9.5 ftlb.)
Holder for vacuum reservoir on cylinder bank 4-6	Cheese head bolt, M6 x 12	Tightening torque	10 Nm (7.5 ftlb.)
Secondary-air pump holder to intake-air distributor for bank 1-3	Screw, M6 x 16	Tightening torque	13 Nm (9.5 ftlb.)
Rear air guide to body	Hexagon nut, M6	Tightening torque	10 Nm (7.5 ftlb.)
Air guide to air cleaner housing	Screw-type clamp	Tightening torque	3 Nm (2 ftlb.)
Air guide in rear wheel housing	M6 screw	Tightening torque	10 Nm (7.5 ftlb.)
Connecting piece for air guide in side panel	Tapping screw	Tightening torque	3 Nm (2 ftlb.)

WM 2X00IN TECHNICAL VALUES - GT3 (GT3, GT3 RS) > INFORMATION > GROUP 26 - EXHAUST SYSTEM

Exhaust system:

Location	Description	Type	Basic value	Tolerance 1	Tolerance 2
Exhaust manifold to cylinder head	Hexagon nut, M8 - always replace	Tightening torque	30 Nm (22 ftlb.)		
Exhaust manifold to	Screw, M8 x 50 - replace	Tightening torque	23 Nm (17 ftlb.)		

front silencer					
Front silencer holder to cylinder head cover	External Torx screw, M8 x 20	Tightening torque	23 Nm (17 ftlb.)		
Front silencer to holder	Collar nut, M8 - replace	Tightening torque	23 Nm (17 ftlb.)		
Front silencer to rear silencer	Collar nut, M8 - replace	Tightening torque	23 Nm (17 ftlb.)		
Clamp on rear silencer	Cheese head bolt, M8 x 50 - replace	Tightening torque	23 Nm (17 ftlb.)		
Tailpipe to rear silencer	Hexagon nut, M8	Tightening torque	23 Nm (17 ftlb.)		

Heat shield, retaining frame with heat protection:

Location	Description	Type	Basic value	Tolerance 1	Tolerance 2
Heat shield to cylinder head cover	External Torx screw, M6 x 12	Tightening torque	13 Nm (9.5 ftlb.)		
Retaining frame with heat protection to body	Collar nut, M6	Tightening torque	7 Nm (5 ftlb.)		
Heat protection for retaining frame to heat protection on bumper	Tapping screw, 4.8 x 19	Tightening torque	3 Nm (2 ftlb.)		
Tapping screw for retaining frame with heat protection - GT3 RS	Tapping screw	Tightening torque	3 Nm (2 ftlb.)		
Screw for retaining frame with heat protection - GT3 RS	M6 screw	Tightening torque	10 Nm (7.5 ftlb.)		
Secondary-air pump to bracket	External Torx screw, M6 x 12	Tightening torque	13 Nm (9.5 ftlb.)		
Secondary-air pump holder to crankcase	External Torx screw, M6 x 25	Tightening torque	13 Nm (9.5 ftlb.)		
Secondary-air pump bracket to holder	External Torx screw, M6 x 16	Tightening torque	13 Nm (9.5 ftlb.)		
Secondary-air pump bracket to	External Torx screw, M6 x 16	Tightening torque	13 Nm (9.5 ftlb.)		

intake-air distributor 1-3			
Secondary-air lines to cylinder head	External Torx screw, M6 x 16	Tightening torque	13 Nm (9.5 ftlb.)
Secondary air valve to line	External Torx screw, M6 x 30	Tightening torque	13 Nm (9.5 ftlb.)
Secondary-air line to holder	External Torx screw, M6 x 12	Tightening torque	13 Nm (9.5 ftlb.)
Secondary-air line to oil guide	External Torx screw, M6 x 12	Tightening torque	13 Nm (9.5 ftlb.)

WM 2X00IN TECHNICAL VALUES - GT3 (GT3, GT3 RS) > INFORMATION > GROUP 27 - STARTER, POWER SUPPLY, CRUISE CONTROL

Location	Description	Type	Basic value	Tolerance 1	Tolerance 2
Retaining bar on cowl panel frame or battery console	Collar nut, M8	Tightening torque	23 Nm (17 ftlb.)		
Terminal clamp to battery terminal	M6 nut	Tightening torque	6 Nm (4.5 ftlb.)		
Ground lead of battery to cowl panel frame	Collar nut, M8	Tightening torque	15 Nm (11 ftlb.)		
Rail on battery console	Hexagon-head bolt, M8	Tightening torque	23 Nm (17 ftlb.)		
Battery console to holder	Hexagon-head bolt, M8	Tightening torque	23 Nm (17 ftlb.)		
Holder for battery console to body	Hexagon-head bolt, M8	Tightening torque	23 Nm (17 ftlb.)		
Generator to bracket	External Torx screw, M8 x 90	Tightening torque	15 Nm (11 ftlb.)		
Starter to crankcase	External Torx screw, M10 x 35	Tightening torque	45 Nm (33 ftlb.)		
Starter cable to terminal 50	Hexagon nut, M6 or hexagon-head bolt, M6	Tightening torque	7 Nm (5 ftlb.)		

B+ line to starter	Collar nut, M8	Tightening torque	18 Nm (13 ftlb.)
B+ line to generator	Collar nut, M8	Tightening torque	18 Nm (13 ftlb.)

WM 2X00IN TECHNICAL VALUES - GT3 (GT3, GT3 RS) > INFORMATION > GROUP 28 - IGNITION, ENGINE SENSORS

Location	Description	Type	Basic value	Tolerance 1	Tolerance 2
Hall sender to cylinder head	Internal Torx screw, M6 x 16	Tightening torque	10 Nm (7.5 ftlb.)		
Knock sensor to crankcase	External Torx screw, M8 x 35	Tightening torque	23 Nm (17 ftlb.)	+/-2 Nm (+/-1.5 ftlb.)	
Ignition coil to cylinder head cover	Internal Torx screw, M6 x 16	Tightening torque	10 Nm (7.5 ftlb.)		
Ground cable for ignition coils to cylinder head cover	Cheese head bolt, M6 x 12	Tightening torque	10 Nm (7.5 ftlb.)		
Spark plug	Initial tightening	Tightening torque	32 Nm (24 ftlb.)	+/-2 Nm (+/-1.5 ftlb.)	
Spark plug	Second tightening	Tightening torque	25 Nm (19 ftlb.)	+3 Nm (+2 ftlb.)	
Oil-pressure sender to crankcase	Internal Torx screw, M6 x 20	Tightening torque	13 Nm (9.5 ftlb.)		
Oil-level sender to oil tank	Hexagon nut, M6	Tightening torque	10 Nm (7.5 ftlb.)		
Control valve to oil guide module	External Torx screw, M6 x 16	Tightening torque	13 Nm (9.5 ftlb.)		
Pulse sender to transmission flange	Cheese head bolt, M6 x 16	Tightening torque	10 Nm (7.5 ftlb.)		

WM 2X00IN BASIC SAFETY INSTRUCTIONS FOR WORKING WITH LEAD-ACID BATTERIES (EXCEPT CARRERA "EDITION", CARRERA CABRIOLET "EDITION", CARRERA 4 "EDITION", TARGA 4, TARGA 4S, TARGA 4 GTS, CARR. 4 CABRIO, CARR. 4S CABRIO, TURBO CABRIO, CARR. 4 GTS CABRIO, TURBO S CABRIO) > DANGERS CAUSED BY ELECTROLYTE WHEN FILLING LEAD-ACID BATTERIES > DANGERS FOR PERSONS

Electrolyte is extremely caustic.

- Avoid contact with caustic fluid.
- Wear personal protective gear.
- Rinse acid splashes in the eyes immediately with clean water. Then consult a doctor immediately
- Neutralize acid splashes on the skin or clothing immediately with acid neutralizer or soap suds and rinse again with plenty of water. Contact a doctor if necessary.
- In the event of extensive skin contact with electrolyte, remove soaked clothing immediately and wash the skin thoroughly in a shower. Then consult a doctor immediately.
- If you drink electrolyte, rinse your mouth immediately with water. Drink water in small sips, do not induce vomiting. Then consult a doctor immediately.
- If you inhale acid mist, breathe in fresh air immediately. Contact a doctor if necessary.
- Do not tilt the battery. Electrolyte can emerge from the vent openings.

WM 2X00IN BASIC SAFETY INSTRUCTIONS FOR WORKING WITH LEAD-ACID BATTERIES (EXCEPT CARRERA "EDITION", CARRERA CABRIOLET "EDITION", CARRERA 4 "EDITION", TARGA 4, TARGA 4S, TARGA 4 GTS, CARR. 4 CABRIO, CARR. 4S CABRIO, TURBO CABRIO, CARR. 4 GTS CABRIO, TURBO S CABRIO) > DANGERS CAUSED BY ELECTROLYTE WHEN FILLING LEAD-ACID BATTERIES > DANGERS FOR THE ENVIRONMENT

Electrolyte reacts with alkalis and water and generates a considerable amount of heat. Electrolyte destroys paper, wood and textiles and has a corrosive reaction to metals. Electrolyte is a fluid that is hazardous to water and causes ecological damage as a result of pH changes.

- Absorb spill electrolyte using binding material.
- Neutralize spill electrolyte with acid neutralizer.
- Dilute small quantities and residual quantities with water and rinse it away.
- Store electrolyte only in acid-resistant containers in the area reserved for pollutants and hazardous substances.
- Transport electrolyte only in securely locked containers.

WM 2X00IN BASIC SAFETY INSTRUCTIONS FOR WORKING WITH LEAD-ACID BATTERIES (EXCEPT CARRERA "EDITION", CARRERA CABRIOLET "EDITION", CARRERA 4 "EDITION", TARGA 4, TARGA 4S, TARGA 4 GTS, CARR. 4 CABRIO, CARR. 4S CABRIO, TURBO CABRIO, CARR. 4 GTS CABRIO, TURBO S CABRIO) > DANGERS WHEN CHARGING LEAD-ACID BATTERIES > DANGERS FOR PERSONS

Highly inflammable hydrogen can be produced if batteries are overcharged or if the charge voltage is too high. Danger of production of hydrogen gas (highly inflammable mixture).

- Only charge lead-acid batteries in special battery rooms.
- Fit forced ventilation systems in the room for excellent ventilation.

- Keep ventilation openings free.
- Keep clear of ignition sources.
- Connect and disconnect the battery terminals only with the charger switched off in order to prevent sparks.
- Do not hold a naked flame or lit cigarette near a battery.
- Only illuminate the inside of a battery with a torch.

WM 2X00IN BASIC SAFETY INSTRUCTIONS FOR WORKING WITH LEAD-ACID BATTERIES (EXCEPT CARRERA "EDITION", CARRERA CABRIOLET "EDITION", CARRERA 4 "EDITION", TARGA 4, TARGA 4S, TARGA 4 GTS, CARR. 4 CABRIO, CARR. 4S CABRIO, TURBO CABRIO, CARR. 4 GTS CABRIO, TURBO S CABRIO) > DANGERS CAUSED BY SHORT CIRCUIT > DANGERS FOR PERSONS

A short circuit between the battery terminals as a result of conductive objects can cause a fire. Danger due to arc, cable fire, terminal meltdown and electrostatic discharge.

- Cover the battery terminals.
- Disconnect the negative cable from the battery before working on the battery.
- Keep electrically conductive objects clear of the battery terminals.
- Only use work clothing and shoes approved by Porsche.

WM 2X00IN BASIC SAFETY INSTRUCTIONS FOR WORKING WITH LEAD-ACID BATTERIES (EXCEPT CARRERA "EDITION", CARRERA CABRIOLET "EDITION", CARRERA 4 "EDITION", TARGA 4, TARGA 4S, TARGA 4 GTS, CARR. 4 CABRIO, CARR. 4S CABRIO, TURBO CABRIO, CARR. 4 GTS CABRIO, TURBO S CABRIO) > PERSONAL PROTECTIVE EQUIPMENT

The protective equipment required for workshop activities is compulsory. The following specific protective equipment is also required for working with lead-acid batteries.

- Protective goggles with side protection.
- Acid/chemical-resistant protective gloves.
- Acid-resistant rubber apron.
- Industrial footwear with acid-resistant soles.

WM 2X00IN BASIC SAFETY INSTRUCTIONS FOR WORKING WITH THE FUEL SYSTEM (EXCEPT CARRERA "EDITION", CARRERA CABRIOLET "EDITION", CARRERA 4 "EDITION", CARRERA 4 CABRIOLET "EDITION") > SAFETY INSTRUCTIONS > SAFETY INSTRUCTIONS WHEN WORKING ON THE FUEL SYSTEM

WARNING: Highly inflammable or explosive materials

- *Danger of fire or explosion*

→ Avoid contact with hot parts or sources of ignition.

→ Use suction to remove ignitable vapors.

→ Attach warning sign in a clearly visible position.

WARNING: Caustic fluids

- *Danger of chemical burns*

→ Avoid contact with caustic fluid.

→ Wear personal protective gear.

→ Ensure that there is good ventilation.

→ If you do come into contact, wash off immediately with plenty of warm water and contact a doctor if necessary.

WM 2X00IN TECHNICAL VALUES (EXCEPT CARRERA "EDITION", CARRERA CABRIOLET "EDITION", CARRERA 4 "EDITION", CARRERA 4 CABRIOLET "EDITION", GT3, GT3 RS) > TOOLS

Designation	Type	Number	Description	
Torque wrench	Commercially available tool	Nr.90 Pos.3		

Open ring wrench	Commercially available tool	Nr.96-3	
Insert adapter with universal joint	Commercially available tool	Nr.98-1 Pos.3	

WM 2X00IN TECHNICAL VALUES (EXCEPT CARRERA "EDITION", CARRERA CABRIOLET "EDITION", CARRERA 4 "EDITION", CARRERA 4 CABRIOLET "EDITION", GT3, GT3 RS) > TECHNICAL VALUES

Location	Description	Type	Basic value	Tolerance 1	Tolerance 2
Fuel tank to body	Screw, M8 x 40	Tightening torque	23 Nm (17 ftlb.)		
Filler neck to body	Screw, M6	Tightening torque	10 Nm (7.5 ftlb.)		
Carbon canister to body	M6	Tightening torque	10 Nm (7.5 ftlb.)		
Fuel pump control unit to battery console	Hexagon speed nut	Tightening torque	2.5 Nm (2 ftlb.)		
Intake-air distributor to cylinder head	External Torx screw, M6 x 35	Tightening torque	13 Nm (9.5 ftlb.)		
Intake-air distributor to intake manifold (X51)	Screw, M6 x 30	Tightening torque	13 Nm (9.5 ftlb.)	+/-2 Nm (+/-1.5 ftlb.)	
Intake manifold (X51) to cylinder head	Screw, M6 x 25	Tightening torque	13 Nm (9.5 ftlb.)		

Holder to intake-air distributor and intake manifold (X51)	M6 screw	Tightening torque	10 Nm (7.5 ftlb.)	
Connecting holder for intake-air distributor/resonance tube (X51)	M6 screw	Tightening torque	6 Nm (4.5 ftlb.)	+1 Nm (+0.5 ftlb.)
Oil filler hose connection piece to intake-air distributor, bank 1-3 (X51)	Screw, M6 x 16	Tightening torque	10 Nm (7.5 ftlb.)	
Clamp for resonance tube	Internal Torx screw, M6 x 35 - micro-self-locking - replace screws	Tightening torque	4.5 Nm (3 ftlb.)	
Positive crankcase ventilation holder to intake-air distributor	External Torx screw, M6 x 12 (2x)	Tightening torque	10 Nm (7.5 ftlb.)	
Vacuum unit to resonance tube	Self-tapping screw	Tightening torque	5 Nm (3.5 ftlb.)	
Tank vent valve holder to intake-air distributor	External Torx screw, M6 x 12 (2x)	Tightening torque	10 Nm (7.5 ftlb.)	
Intake manifold pressure sensor to intake-air distributor	Oval-head screw, 6.0 x 15	Tightening torque	5 Nm (3.5 ftlb.)	
Throttle housing to intake-air distributor	External Torx screw, M6 x 50	Tightening torque	10 Nm (7.5 ftlb.)	
Throttle housing to resonance tube (X51)	Screw, M6 x 45	Tightening torque	10 Nm (7.5 ftlb.)	
Cable duct to intake-air distributor	External Torx screw, M6 x 16	Tightening torque	13 Nm (9.5 ftlb.)	
Rubber shroud to throttle body	Screw-type clamp	Tightening torque	3 Nm (2 ftlb.)	
Air cleaner housing to body	Hexagon-head bolt with washer, M6 x 25	Tightening torque	7 Nm (5 ftlb.)	
Air cleaner housing cover	Self-tapping screw	Tightening torque	3 Nm (2 ftlb.)	
DME control unit holder to body	M6 collar nut	Tightening torque	9 Nm (6.5 ftlb.)	
Intake manifold pressure sensor to resonance tube (X51)	Screw, M5 x 16	Tightening torque	5 Nm (3.5 ftlb.)	

Vacuum unit to resonance tube (X51)	Screws M5 x 16	Tightening torque	5 Nm (3.5 ftlb.)	
Vacuum unit to intake manifold/flap module (X51)	M5 nut, self-locking	Tightening torque	5 Nm (3.5 ftlb.)	+/-1 Nm (+/-0.5 ftlb.)
Flap module to intake manifold (X51)	Screw, M5 x 12	Tightening torque	7 Nm (5 ftlb.)	+/-1 Nm (+/-0.5 ftlb.)
Holder for wire harness for intake manifold 1-3, front	Screw, M6 x 12	Tightening torque	10 Nm (7.5 ftlb.)	
Union nut on fuel high-pressure line (a/f 14)	Coat thread and cone with OKS 1710	Tightening torque	25 Nm (19 ftlb.)	
Union nut on fuel low-pressure line (a/f 17)	Coat thread and cone with OKS 1710	Tightening torque	25 Nm (19 ftlb.)	
High-pressure pump and cover to cylinder head	External Torx, M6 x 25	Tightening torque	13 Nm (9.5 ftlb.)	
Cover and high-pressure pump to cylinder head	External Torx, M6 x 40	Tightening torque	13 Nm (9.5 ftlb.)	
Heat protection to cover	External Torx, M6 x 12	Tightening torque	13 Nm (9.5 ftlb.)	
Union nut on connecting line for cylinder 1-3 and 4-6	M14 x 1.5 - coat thread and cone with OKS 1710	Tightening torque	20 Nm (15 ftlb.)	
Union nut securing high-pressure pump line to connecting line	M14 x 1.5 - coat thread and cone with OKS 1710	Tightening torque	20 Nm (15 ftlb.)	
Fuel collection pipes to cylinder head	External Torx screw, M6 x 30	Tightening torque	13 Nm (9.5 ftlb.)	
Holder securing high-pressure line and low-pressure line to cylinder head	External Torx screw, M6 x 16	Tightening torque	13 Nm (9.5 ftlb.)	
Holder securing connecting line to cylinder head	External Torx screw, M6 x 16	Tightening torque	13 Nm (9.5 ftlb.)	
Holding clamp securing high-pressure line to sheetmetal bracket	External Torx screw, M6 x 12	Tightening torque	10 Nm (7.5 ftlb.)	
Holding clamp securing connecting line to sheetmetal bracket	External Torx screw, M6 x 12	Tightening torque	10 Nm (7.5 ftlb.)	

High-pressure sensor to fuel collection pipe for cylinder 4-6	M10 x 1	Tightening torque	22 Nm (16 ftlb.)	+/-2 Nm (+/-1.5 ftlb.)
Oxygen sensor downstream of catalytic converter	During re-installation, grease thread using prescribed lubricant	Tightening torque	42 Nm (31 ftlb.)	+5 Nm (+3.5 ftlb.)
Oxygen sensor upstream of catalytic converter		Tightening torque	42 Nm (31 ftlb.)	+5 Nm (+3.5 ftlb.)
Oxygen sensor cable holder to cylinder head	Cheese head bolt, M6 x 12	Tightening torque	10 Nm (7.5 ftlb.)	
Oxygen sensor to catalytic converter	During re-installation, grease thread using prescribed lubricant	Tightening torque using prescribed tool	39 Nm (29 ftlb.)	
Exhaust manifold to cylinder head	External Torx screw, M8 x 21	Tightening torque	30 Nm (22 ftlb.)	
Exhaust manifold to front silencer	Collar nut, M8 - replace	Tightening torque	23 Nm (17 ftlb.)	
Console to cylinder head	External Torx screw, M8 x 20	Tightening torque	23 Nm (17 ftlb.)	
Holder for rear silencer to cylinder head	External Torx screw, M8 x 20 (4x)	Tightening torque	23 Nm (17 ftlb.)	
Rear silencer to holder for rear silencer	Collar nut, M8	Tightening torque	23 Nm (17 ftlb.)	
Strut to rear silencer	Collar nut, M8 - replace	Tightening torque	23 Nm (17 ftlb.)	
Clamp	Cheese head bolt, M8 x 50	Tightening torque	15 Nm (11 ftlb.)	
Exhaust tailpipe	Clamp can be replaced	Tightening torque	30 Nm (22 ftlb.)	
Exhaust manifold to cylinder head	External Torx screw, M8 x 27	Initial tightening	15 Nm (11 ftlb.)	
Exhaust manifold to cylinder head	External Torx screw, M8 x 27	Torque angle	45° (33 ftlb.)	
Exhaust manifold to turbocharger	Hexagon nut, M8 - replace, grease threaded bolts with MicroGleit LP 475	Tightening torque	25 Nm (19 ftlb.)	

Catalytic converter to turbocharger	Hexagon nut, M8 - replace	Tightening torque	25 Nm (19 ftlb.)
Clamp on rear silencer	Cheese head bolt, M8 x 50 - replace clamp and screw	Tightening torque	15 Nm (11 ftlb.)
Clamping securing rear silencer to catalytic converter	M10 - replace clamping sleeve	Tightening torque	55 Nm (41 ftlb.)
Tailpipe cover to rear silencer	M8	Tightening torque	30 Nm (22 ftlb.)
Heat shield to cylinder head cover	Screw, M6 x 12	Tightening torque	10 Nm (7.5 ftlb.)
Secondary-air pump to holder	External Torx screw, M6 x 12	Tightening torque	10 Nm (7.5 ftlb.)
Secondary air line to crankcase 1-3	External Torx screw, M6 x 20	Tightening torque	13 Nm (9.5 ftlb.)
Secondary air line to cylinder head, cylinder bank 1-3 and 4-6	External Torx screw, M6 x 20	Tightening torque	13 Nm (9.5 ftlb.)
Connecting line to cylinder head, cylinder bank 4-6	External Torx screw, M6 x 12	Tightening torque	10 Nm (7.5 ftlb.)
Secondary-air valves to lines	External Torx screw, M6 x 16	Tightening torque	10 Nm (7.5 ftlb.)
Secondary-air blower to bracket	External Torx screw, M6 x 12	Tightening torque	10 Nm (7.5 ftlb.)
Upper part of heat shield to cylinder head cover	External Torx screw, M6 x 12	Tightening torque	13 Nm (9.5 ftlb.)
Lower part of heat shield to cylinder head cover	External Torx screw, M6 x 12	Tightening torque	13 Nm (9.5 ftlb.)
Retaining frame to body	Collar nut, M6	Tightening torque	7 Nm (5 ftlb.)
Heat protection for retaining frame to heat shield on bumper	Tapping screw, 4.8 x 19	Tightening torque	3 Nm (2 ftlb.)
Terminal 50 line to starter	Collar nut, M6	Tightening torque	6.5 Nm (5 ftlb.)
B+ line to starter	Collar nut, M8	Tightening torque	18 Nm (13 ftlb.)
Starter	External Torx screw, M10 x 35	Tightening torque	45 Nm (33 ftlb.)

B+ line to generator	Collar nut, M8	Tightening torque	18 Nm (13 ftlb.)	
Generator to crankcase/cylinder head	External Torx screw, M8 x 90	Tightening torque	15 Nm (11 ftlb.)	
Start/Stop voltage converter to body	Plastic nut	Tightening torque	2.5 Nm (2 ftlb.)	
Distance measuring sensor control unit to bumper reinforcement	Collar nut, M6, self-locking - replace	Tightening torque	9 Nm (6.5 ftlb.)	
Battery filler plug		Tightening torque	1.2 Nm (0.9 ftlb.)	
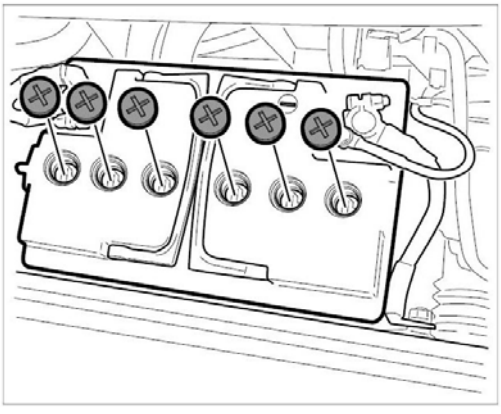 Unscrewing battery plugs				
Retaining bar on cowl panel frame or battery console	Collar nut, M8	Tightening torque	23 Nm (17 ftlb.)	
Terminal clamp to battery terminal	M6 nut	Tightening torque	6 Nm (4.5 ftlb.)	
Battery ground line to cowl panel frame	Collar nut, M8	Tightening torque	15 Nm (11 ftlb.)	
Rail to battery console	Hexagon-head bolt, M8	Tightening torque	23 Nm (17 ftlb.)	
Battery console to holder	Hexagon-head bolt, M8	Tightening torque	23 Nm (17 ftlb.)	
Battery console holder to body	Hexagon-head bolt, M8	Tightening torque	23 Nm (17 ftlb.)	
Hall sender to cylinder head	External Torx, M6 x 16	Tightening torque	10 Nm (7.5 ftlb.)	
Knock sensor to crankcase	External Torx, M8 x 35	Tightening torque	23 Nm (17 ftlb.)	+/-2 Nm (+/-1.5 ftlb.)
Ignition coil to cylinder head cover	Internal Torx, M6 x 16	Tightening torque	10 Nm (7.5 ftlb.)	

Spark plug	Initial tightening	Tightening torque	32 Nm (24 ftlb.)	+/-2 Nm (+/-1.5 ftlb.)
Spark plug	Second tightening	Tightening torque	25 Nm (19 ftlb.)	+3 Nm (+2 ftlb.)
Oil-pressure sender to oil module	External Torx, M6 x 20	Tightening torque	10 Nm (7.5 ftlb.)	
Pulse sender (speed sender) to transmission	Screw, M6 x 16	Tightening torque	10 Nm (7.5 ftlb.)	

WM 2X00IN TECHNICAL VALUES (EXCEPT CARRERA "EDITION", CARRERA CABRIOLET "EDITION", CARRERA 4 "EDITION", CARRERA 4 CABRIOLET "EDITION", GT3, GT3 RS) > TECHNICAL VALUES - GROUP 20 - FUEL SUPPLY, CONTROL > FUEL SUPPLY

Location	Description	Type	Basic value	Tolerance 1	Tolerance 2
Fuel tank to body	Screw, M8 x 40	Tightening torque	23 Nm (17 ftlb.)		
Filler neck to body	Screw, M6	Tightening torque	10 Nm (7.5 ftlb.)		
Carbon canister to body	M6	Tightening torque	10 Nm (7.5 ftlb.)		
Fuel pump control unit to battery console	Hexagon speed nut	Tightening torque	2.5 Nm (2 ftlb.)		

WM 2X00IN TECHNICAL VALUES (EXCEPT CARRERA "EDITION", CARRERA CABRIOLET "EDITION", CARRERA 4 "EDITION", CARRERA 4 CABRIOLET "EDITION", GT3, GT3 RS) > TECHNICAL VALUES - GROUP 24 - FUEL SYSTEM, ELECTRONIC INJECTION > INTAKE-AIR DISTRIBUTOR, AIR CLEANER

Location	Description	Type	Basic value	Tolerance 1	Tolerance 2
Intake-air distributor to cylinder head	External Torx screw, M6 x 35	Tightening torque	13 Nm (9.5 ftlb.)		
Intake-air distributor to intake manifold (X51)	Screw, M6 x 30	Tightening torque	13 Nm (9.5 ftlb.)	+/-2 Nm (+/-1.5 ftlb.)	
Intake manifold (X51) to cylinder head	Screw, M6 x 25	Tightening torque	13 Nm (9.5 ftlb.)		
Holder to intake-air distributor and intake manifold (X51)	M6 screw	Tightening torque	10 Nm (7.5 ftlb.)		

Connecting holder for intake-air distributor/resonance tube (X51)	M6 screw	Tightening torque	6 Nm (4.5 ftlb.)	+1 Nm (+0.5 ftlb.)
Oil filler hose connection piece to intake-air distributor, bank 1-3 (X51)	Screw, M6 x 16	Tightening torque	10 Nm (7.5 ftlb.)	
Clamp for resonance tube	Internal Torx screw, M6 x 35 - micro-self-locking - replace screws	Tightening torque	4.5 Nm (3 ftlb.)	
Positive crankcase ventilation holder to intake-air distributor	External Torx screw, M6 x 12 (2x)	Tightening torque	10 Nm (7.5 ftlb.)	
Vacuum unit to resonance tube	Self-tapping screw	Tightening torque	5 Nm (3.5 ftlb.)	
Tank vent valve holder to intake-air distributor	External Torx screw, M6 x 12 (2x)	Tightening torque	10 Nm (7.5 ftlb.)	
Intake manifold pressure sensor to intake-air distributor	Oval-head screw, 6.0 x 15	Tightening torque	5 Nm (3.5 ftlb.)	
Throttle housing to intake-air distributor	External Torx screw, M6 x 50	Tightening torque	10 Nm (7.5 ftlb.)	
Throttle housing to resonance tube (X51)	Screw, M6 x 45	Tightening torque	10 Nm (7.5 ftlb.)	
Cable duct to intake-air distributor	External Torx screw, M6 x 16	Tightening torque	13 Nm (9.5 ftlb.)	
Rubber shroud to throttle body	Screw-type clamp	Tightening torque	3 Nm (2 ftlb.)	
Air cleaner housing to body	Hexagon-head bolt with washer, M6 x 25	Tightening torque	7 Nm (5 ftlb.)	
Air cleaner housing cover	Self-tapping screw	Tightening torque	3 Nm (2 ftlb.)	
DME control unit holder to body	M6 collar nut	Tightening torque	9 Nm (6.5 ftlb.)	
Intake manifold pressure sensor to resonance tube (X51)	Screw, M5 x 16	Tightening torque	5 Nm (3.5 ftlb.)	
Vacuum unit to resonance tube (X51)	Screws M5 x 16	Tightening torque	5 Nm (3.5 ftlb.)	

Vacuum unit to intake manifold/flap module (X51)	M5 nut, self-locking	Tightening torque	5 Nm (3.5 ftlb.)	+/-1 Nm (+/-0.5 ftlb.)
Flap module to intake manifold (X51)	Screw, M5 x 12	Tightening torque	7 Nm (5 ftlb.)	+/-1 Nm (+/-0.5 ftlb.)
Holder for wire harness for intake manifold 1-3, front	Screw, M6 x 12	Tightening torque	10 Nm (7.5 ftlb.)	

WM 2X00IN TECHNICAL VALUES (EXCEPT CARRERA "EDITION", CARRERA CABRIOLET "EDITION", CARRERA 4 "EDITION", CARRERA 4 CABRIOLET "EDITION", GT3, GT3 RS) > TECHNICAL VALUES - GROUP 24 - FUEL SYSTEM, ELECTRONIC INJECTION > HIGH-PRESSURE PUMP

Fig 1: Overview Of High-Pressure Pump

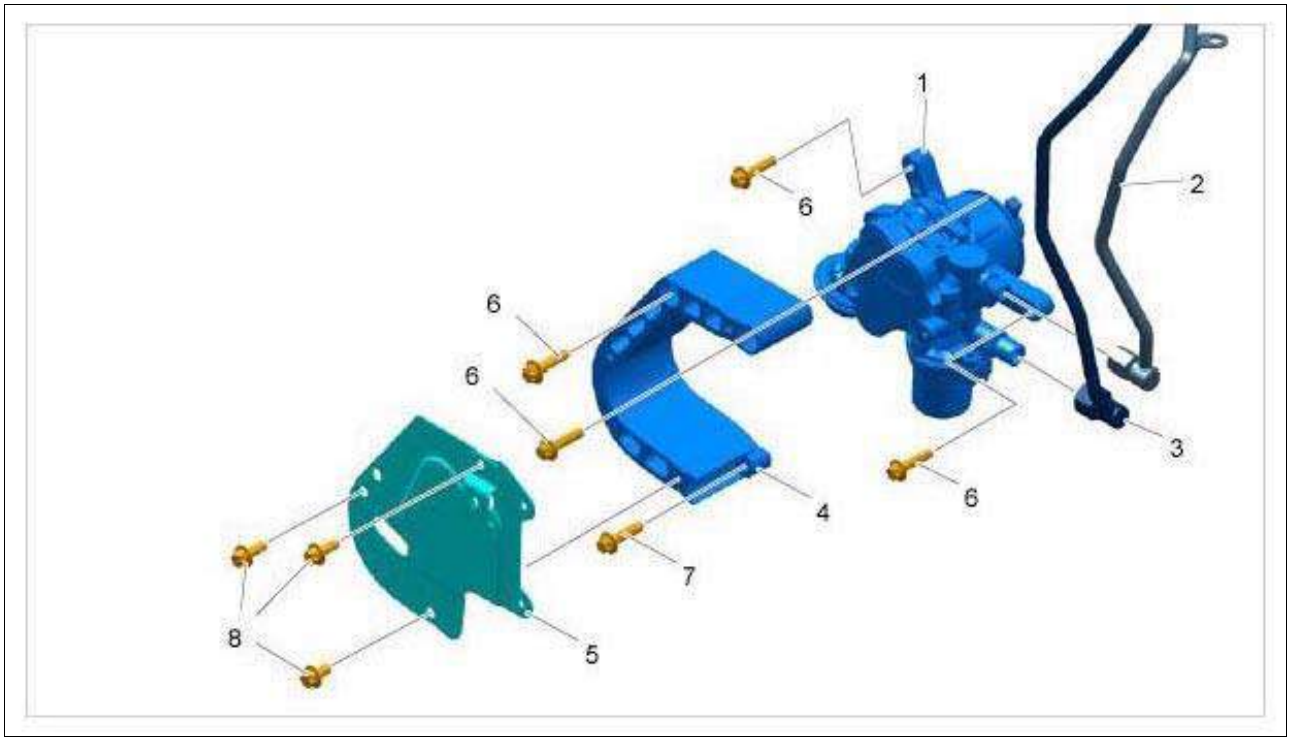

Courtesy of PORSCHE CARS NORTH AMERICA, INC.

1. High-pressure pump
2. High-pressure line → **Tightening torque: 25 Nm (19 ftlb.)**
3. Low-pressure line → **Tightening torque: 25 Nm (19 ftlb.)**
4. Cover
5. Heat protection
6. Screws, M6 x 25 → **Tightening torque: 13 Nm (9.5 ftlb.)**
7. Screw, M6 x 40 → **Tightening torque: 13 Nm (9.5 ftlb.)**

8. Screws, M6 x 12 → **Tightening torque: 13 Nm (9.5 ftlb.)**

WM 2X00IN TECHNICAL VALUES (EXCEPT CARRERA "EDITION", CARRERA CABRIOLET "EDITION", CARRERA 4 "EDITION", CARRERA 4 CABRIOLET "EDITION", GT3, GT3 RS) > TECHNICAL VALUES - GROUP 24 - FUEL SYSTEM, ELECTRONIC INJECTION > DFI FUEL LINES

Location	Description	Type	Basic value	Tolerance 1	Tolerance 2
Union nut on connecting line for cylinder 1-3 and 4-6	M14 x 1.5 - coat thread and cone with OKS 1710	Tightening torque	20 Nm (15 ftlb.)		
Union nut securing high-pressure pump line to connecting line	M14 x 1.5 - coat thread and cone with OKS 1710	Tightening torque	20 Nm (15 ftlb.)		
Fuel collection pipes to cylinder head	External Torx screw, M6 x 30	Tightening torque	13 Nm (9.5 ftlb.)		
Holder securing high-pressure line and low-pressure line to cylinder head	External Torx screw, M6 x 16	Tightening torque	13 Nm (9.5 ftlb.)		
Holder securing connecting line to cylinder head	External Torx screw, M6 x 16	Tightening torque	13 Nm (9.5 ftlb.)		
Holding clamp securing high-pressure line to sheetmetal bracket	External Torx screw, M6 x 12	Tightening torque	10 Nm (7.5 ftlb.)		
Holding clamp securing connecting line to sheetmetal bracket	External Torx screw, M6 x 12	Tightening torque	10 Nm (7.5 ftlb.)		
High-pressure sensor to fuel collection pipe for cylinder 4-6	M10 x 1	Tightening torque	22 Nm (16 ftlb.)	+/-2 Nm (+/-1.5 ftlb.)	

WM 2X00IN TECHNICAL VALUES (EXCEPT CARRERA "EDITION", CARRERA CABRIOLET "EDITION", CARRERA 4 "EDITION", CARRERA 4 CABRIOLET "EDITION", GT3, GT3 RS) > TECHNICAL VALUES - GROUP 24 - FUEL SYSTEM, ELECTRONIC INJECTION > OXYGEN SENSORS

Fig 1: Overview Of Oxygen Sensors (Cylinder Bank 4-6)

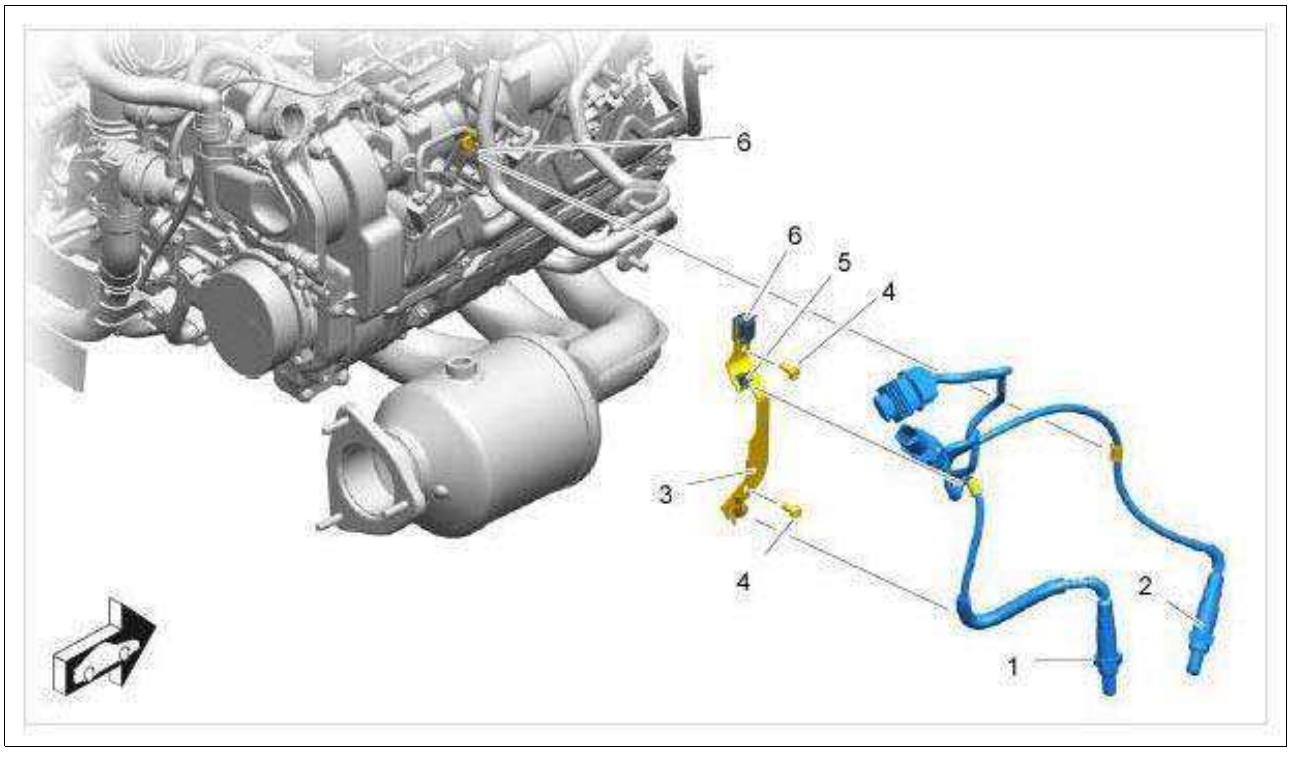

Courtesy of PORSCHE CARS NORTH AMERICA, INC.

Fig 2: Overview Of Oxygen Sensors (Cylinder Bank 1-3)

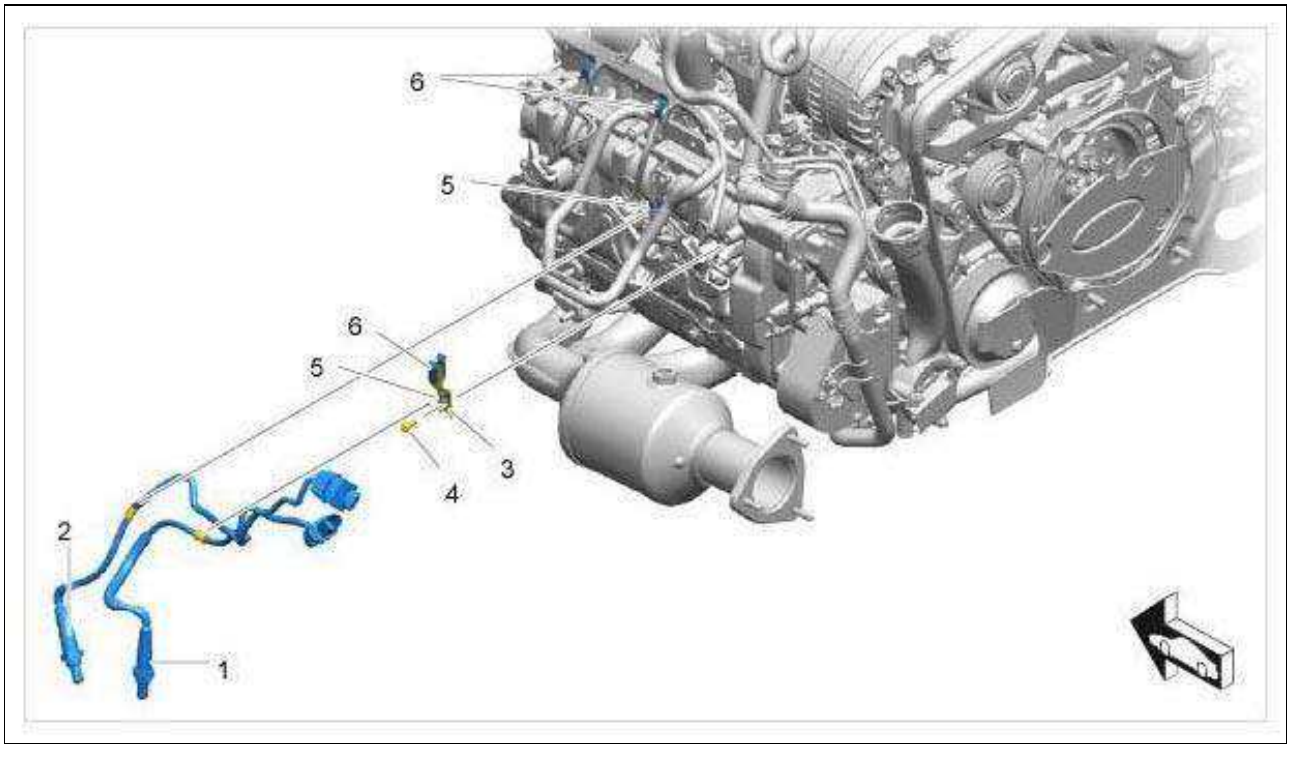

Courtesy of PORSCHE CARS NORTH AMERICA, INC.

1. Oxygen sensor downstream of catalytic converter → **Tightening torque: 42 Nm (31 ftlb.)+5 Nm (+3.5 ftlb.)**

2. Oxygen sensor upstream of catalytic converter → **Tightening torque: 42 Nm (31 ftlb.)+5 Nm (+3.5 ftlb.)**

3. Holder

4. Fastening screw → **Tightening torque: 10 Nm (7.5 ftlb.)**

5. Small retaining clip

6. Large retaining clip

Tightening torque using recommended tool

1. **Torque wrench Nr.90 Pos.3** - suitable for 3/8 inch heads

2. **Insert adapter with universal joint Nr.98-1 Pos.3**

3. **Open ring wrench Nr.96-3** , width across flats: 22 mm

Fig 3: Identifying Oxygen Sensors Tools

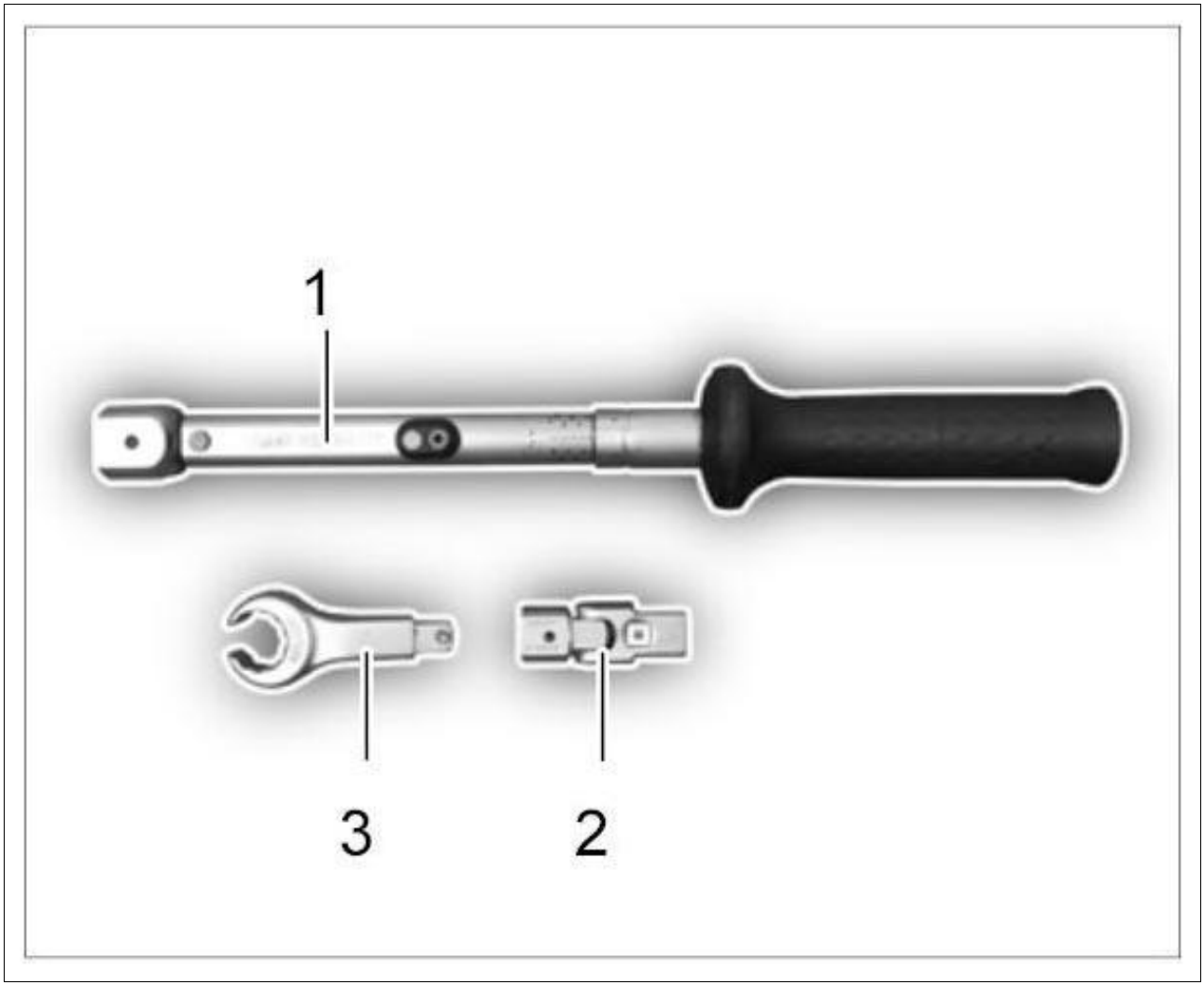

Courtesy of PORSCHE CARS NORTH AMERICA, INC.

Location	Description	Type	Basic value	Tolerance 1	Tolerance 2

Oxygen sensor to catalytic converter	During re-installation, grease thread using prescribed lubricant	Tightening torque using prescribed tool	39 Nm (29 ftlb.)

WM 2X00IN TECHNICAL VALUES (EXCEPT CARRERA "EDITION", CARRERA CABRIOLET "EDITION", CARRERA 4 "EDITION", CARRERA 4 CABRIOLET "EDITION", GT3, GT3 RS) > TECHNICAL VALUES - GROUP 26 - EXHAUST SYSTEM > EXHAUST SYSTEM

Location	Description	Type	Basic value	Tolerance 1	Tolerance 2
Exhaust manifold to cylinder head	External Torx screw, M8 x 21	Tightening torque	30 Nm (22 ftlb.)		
Exhaust manifold to front silencer	Collar nut, M8 - replace	Tightening torque	23 Nm (17 ftlb.)		
Console to cylinder head	External Torx screw, M8 x 20	Tightening torque	23 Nm (17 ftlb.)		
Holder for rear silencer to cylinder head	External Torx screw, M8 x 20 (4x)	Tightening torque	23 Nm (17 ftlb.)		
Rear silencer to holder for rear silencer	Collar nut, M8	Tightening torque	23 Nm (17 ftlb.)		
Strut to rear silencer	Collar nut, M8 - replace	Tightening torque	23 Nm (17 ftlb.)		
Clamp	Cheese head bolt, M8 x 50	Tightening torque	15 Nm (11 ftlb.)		
Exhaust tailpipe	Clamp can be replaced	Tightening torque	30 Nm (22 ftlb.)		

WM 2X00IN TECHNICAL VALUES (EXCEPT CARRERA "EDITION", CARRERA CABRIOLET "EDITION", CARRERA 4 "EDITION", CARRERA 4 CABRIOLET "EDITION", GT3, GT3 RS) > TECHNICAL VALUES - GROUP 26 - EXHAUST SYSTEM

Location	Description	Type	Basic value	Tolerance 1	Tolerance 2
Exhaust manifold to cylinder head	External Torx screw, M8 x 27	Initial tightening	15 Nm (11 ftlb.)		
Exhaust manifold to cylinder head	External Torx screw, M8 x 27	Torque angle	45° (33 ftlb.)		
Exhaust manifold to turbocharger	Hexagon nut, M8 - replace, grease	Tightening torque	25 Nm (19 ftlb.)		

	threaded bolts with MicroGleit LP 475		
Catalytic converter to turbocharger	Hexagon nut, M8 - replace	Tightening torque	25 Nm (19 ftlb.)
Clamp on rear silencer	Cheese head bolt, M8 x 50 - replace clamp and screw	Tightening torque	15 Nm (11 ftlb.)
Clamping securing rear silencer to catalytic converter	M10 - replace clamping sleeve	Tightening torque	55 Nm (41 ftlb.)
Tailpipe cover to rear silencer	M8	Tightening torque	30 Nm (22 ftlb.)
Heat shield to cylinder head cover	Screw, M6 x 12	Tightening torque	10 Nm (7.5 ftlb.)
Secondary-air pump to holder	External Torx screw, M6 x 12	Tightening torque	10 Nm (7.5 ftlb.)
Secondary air line to crankcase 1-3	External Torx screw, M6 x 20	Tightening torque	13 Nm (9.5 ftlb.)
Secondary air line to cylinder head, cylinder bank 1-3 and 4-6	External Torx screw, M6 x 20	Tightening torque	13 Nm (9.5 ftlb.)
Connecting line to cylinder head, cylinder bank 4-6	External Torx screw, M6 x 12	Tightening torque	10 Nm (7.5 ftlb.)
Secondary-air valves to lines	External Torx screw, M6 x 16	Tightening torque	10 Nm (7.5 ftlb.)
Secondary-air blower to bracket	External Torx screw, M6 x 12	Tightening torque	10 Nm (7.5 ftlb.)

WM 2X00IN TECHNICAL VALUES (EXCEPT CARRERA "EDITION", CARRERA CABRIOLET "EDITION", CARRERA 4 "EDITION", CARRERA 4 CABRIOLET "EDITION", GT3, GT3 RS) > TECHNICAL VALUES - GROUP 26 - EXHAUST SYSTEM > HEAT SHIELD, RETAINING FRAME WITH HEAT PROTECTION

Location	Description	Type	Basic value	Tolerance 1	Tolerance 2
Upper part of heat shield to cylinder head cover	External Torx screw, M6 x 12	Tightening torque	13 Nm (9.5 ftlb.)		

Lower part of heat shield to cylinder head cover	External Torx screw, M6 x 12	Tightening torque	13 Nm(9.5 ftlb.)
Retaining frame to body	Collar nut, M6	Tightening torque	7 Nm (5 ftlb.)
Heat protection for retaining frame to heat shield on bumper	Tapping screw, 4.8 x 19	Tightening torque	3 Nm (2 ftlb.)

WM 2X00IN TECHNICAL VALUES (EXCEPT CARRERA "EDITION", CARRERA CABRIOLET "EDITION", CARRERA 4 "EDITION", CARRERA 4 CABRIOLET "EDITION", GT3, GT3 RS) > TECHNICAL VALUES - GROUP 27 - STARTER, POWER SUPPLY, CRUISE CONTROL > STARTER AND GENERATOR

Location	Description	Type	Basic value	Tolerance 1	Tolerance 2
Terminal 50 line to starter	Collar nut, M6	Tightening torque	6.5 Nm (5 ftlb.)		
B+ line to starter	Collar nut, M8	Tightening torque	18 Nm (13 ftlb.)		
Starter	External Torx screw, M10 x 35	Tightening torque	45 Nm (33 ftlb.)		
B+ line to generator	Collar nut, M8	Tightening torque	18 Nm (13 ftlb.)		
Generator to crankcase/cylinder head	External Torx screw, M8 x 90	Tightening torque	15 Nm (11 ftlb.)		
Start/Stop voltage converter to body	Plastic nut	Tightening torque	2.5 Nm (2 ftlb.)		

WM 2X00IN TECHNICAL VALUES (EXCEPT CARRERA "EDITION", CARRERA CABRIOLET "EDITION", CARRERA 4 "EDITION", CARRERA 4 CABRIOLET "EDITION", GT3, GT3 RS) > TECHNICAL VALUES - GROUP 27 - STARTER, POWER SUPPLY, CRUISE CONTROL > ADAPTIVE CRUISE CONTROL

Location	Description	Type	Basic value	Tolerance 1	Tolerance 2
Distance measuring sensor control unit to bumper reinforcement	Collar nut, M6, self-locking - replace	Tightening torque	9 Nm (6.5 ftlb.)		

WM 2X00IN TECHNICAL VALUES (EXCEPT CARRERA "EDITION", CARRERA CABRIOLET "EDITION", CARRERA 4 "EDITION", CARRERA 4 CABRIOLET

"EDITION", GT3, GT3 RS) > TECHNICAL VALUES - GROUP 27 - STARTER, POWER SUPPLY, CRUISE CONTROL > BATTERY

Location	Description	Type	Basic value	Tolerance 1	Tolerance 2
Battery filler plug		Tightening torque	1.2 Nm (0.9 ftlb.)		
	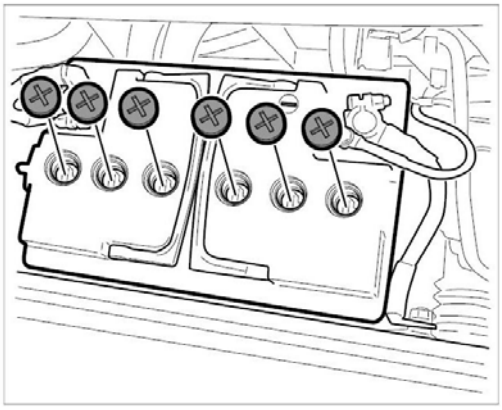		Unscrewing battery plugs		
Retaining bar on cowl panel frame or battery console	Collar nut, M8	Tightening torque	23 Nm (17 ftlb.)		
Terminal clamp to battery terminal	M6 nut	Tightening torque	6 Nm (4.5 ftlb.)		
Battery ground line to cowl panel frame	Collar nut, M8	Tightening torque	15 Nm (11 ftlb.)		
Rail to battery console	Hexagon-head bolt, M8	Tightening torque	23 Nm (17 ftlb.)		
Battery console to holder	Hexagon-head bolt, M8	Tightening torque	23 Nm (17 ftlb.)		
Battery console holder to body	Hexagon-head bolt, M8	Tightening torque	23 Nm (17 ftlb.)		

WM 2X00IN TECHNICAL VALUES (EXCEPT CARRERA "EDITION", CARRERA CABRIOLET "EDITION", CARRERA 4 "EDITION", CARRERA 4 CABRIOLET "EDITION", GT3, GT3 RS) > TECHNICAL VALUES - GROUP 28 - OVERVIEW OF IGNITION SYSTEM, ENGINE SENSORS > IGNITION, ENGINE SENSORS

Components:

Fig 1: Identifying Ignition And Engine Sensors

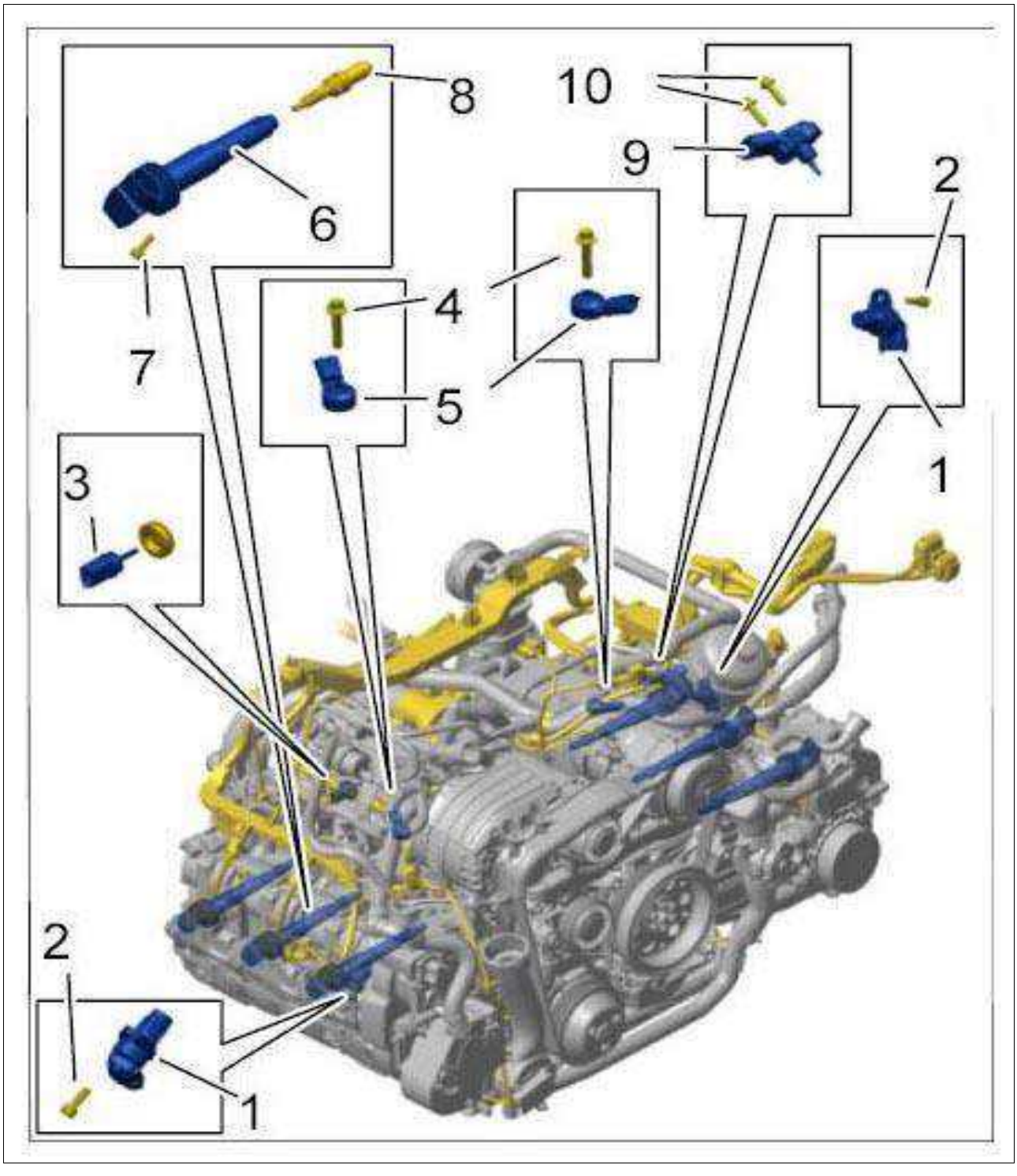

Courtesy of PORSCHE CARS NORTH AMERICA, INC.

1. Hall sender
2. Screw, M6 x 16 → **Tightening torque: 10 Nm (7.5 ftlb.)**
3. Engine compartment temperature sensor with rubber sleeve
4. Screw, M8 x 35 → **Tightening torque: 23 Nm (17 ftlb.)+/-2 Nm (+/-1.5 ftlb.)**

5. Knock sensor - mark installation position
6. Ignition coil
7. Screw, M6 x 16 → **Tightening torque: 10 Nm (7.5 ftlb.)**
8. Spark plug → **Tightening torque: 32 Nm (24 ftlb.)+/-2 Nm (+/-1.5 ftlb.)** → **Tightening torque: 25 Nm (19 ftlb.)+3 Nm (+2 ftlb.)**
9. Oil-pressure sender
10. Screw, M6 x 20 → **Tightening torque: 10 Nm (7.5 ftlb.)**

Location	Description	Type	Basic value	Tolerance 1	Tolerance 2
Pulse sender (speed sender) to transmission	Screw, M6 x 16	Tightening torque	10 Nm (7.5 ftlb.)		

WM 2X00IN BATTERY TRICKLE CHARGING (EXCEPT CARRERA "EDITION", CARRERA CABRIOLET "EDITION", CARRERA 4 "EDITION", TARGA 4, TARGA 4S, TARGA 4 GTS, CARR. 4 CABRIO, CARR. 4S CABRIO, TURBO CABRIO, CARR. 4 GTS CABRIO, TURBO S CABRIO, CARRERA 4 CABRIOLET "EDITION") > PRELIMINARY WORK

1. Remove cover. → Removing Cover
2. Connect rapid-start battery charger to the vehicle battery. Follow the instructions under "Battery charging condition/operating status" in the guide for the rapid-start battery charger.

WM 2X00IN BATTERY TRICKLE CHARGING (EXCEPT CARRERA "EDITION", CARRERA CABRIOLET "EDITION", CARRERA 4 "EDITION", TARGA 4, TARGA 4S, TARGA 4 GTS, CARR. 4 CABRIO, CARR. 4S CABRIO, TURBO CABRIO, CARR. 4 GTS CABRIO, TURBO S CABRIO, CARRERA 4 CABRIOLET "EDITION") > TOOLS AND MATERIALS

Check battery voltage using a rapid-start battery charger.

WM 2X00IN BATTERY TRICKLE CHARGING (EXCEPT CARRERA "EDITION", CARRERA CABRIOLET "EDITION", CARRERA 4 "EDITION", TARGA 4, TARGA 4S, TARGA 4 GTS, CARR. 4 CABRIO, CARR. 4S CABRIO, TURBO CABRIO, CARR. 4 GTS CABRIO, TURBO S CABRIO, CARRERA 4 CABRIOLET "EDITION") > CHECKING CHARGE STATE WITH BATTERY TESTER

Information

The instructions for working on the vehicle battery and the safety specifications in the document "General information on the vehicle battery" must be observed. → 2X00IN GENERAL INFORMATION ON THE VEHICLE BATTERY

1. Check the charge state of the battery according to the operating instructions for the relevant

rapid-start battery charger.

Evaluating the test results and further procedures:

Open-circuit voltage in volts	Battery charge state in %	Evaluation and procedure
12.7 - 12.5	100 - 80	Battery charge state OK
12.5 - 12.2	80 - 50	Battery charge state reduced, recharge battery and observe an inactive period for two hours after charging.
12.2 - 11.6	50 - 10	Battery flat; recharge battery and observe an inactive period for two hours after charging.
below 11.6	below 10	Battery totally discharged; replace battery. → 270619 REMOVING AND INSTALLING BATTERY

WM 2X00IN BATTERY TRICKLE CHARGING (EXCEPT CARRERA "EDITION", CARRERA CABRIOLET "EDITION", CARRERA 4 "EDITION", TARGA 4, TARGA 4S, TARGA 4 GTS, CARR. 4 CABRIO, CARR. 4S CABRIO, TURBO CABRIO, CARR. 4 GTS CABRIO, TURBO S CABRIO, CARRERA 4 CABRIOLET "EDITION") > BATTERY TRICKLE CHARGING

NOTE: Using charging cables/jump leads directly on the vehicle battery.

- *Risk of damage to battery sensors.*

→ Always connect charging cables/jump leads to the external power supply for jump-lead starting.

Information

- When working or carrying out tests on the vehicle or when the vehicle is in the workshop, a battery charger with a rated current of at least 40 A must be connected.
- As soon as the vehicle is unlocked, e.g. the vehicle is in the workshop or salesroom, it must be trickle charged with a battery charging device.

→ "Workshop Equipment and Special Tools Manual" Battery chargers.

1. External power connection
    1. 1.1. First, connect the positive cable from the charger to the positive terminal **-+-** .
    2. 1.2. Then connect the negative cable from the charger to the ground point for jump-lead starting **-** .

Fig 1: Identifying Battery External Power Connection

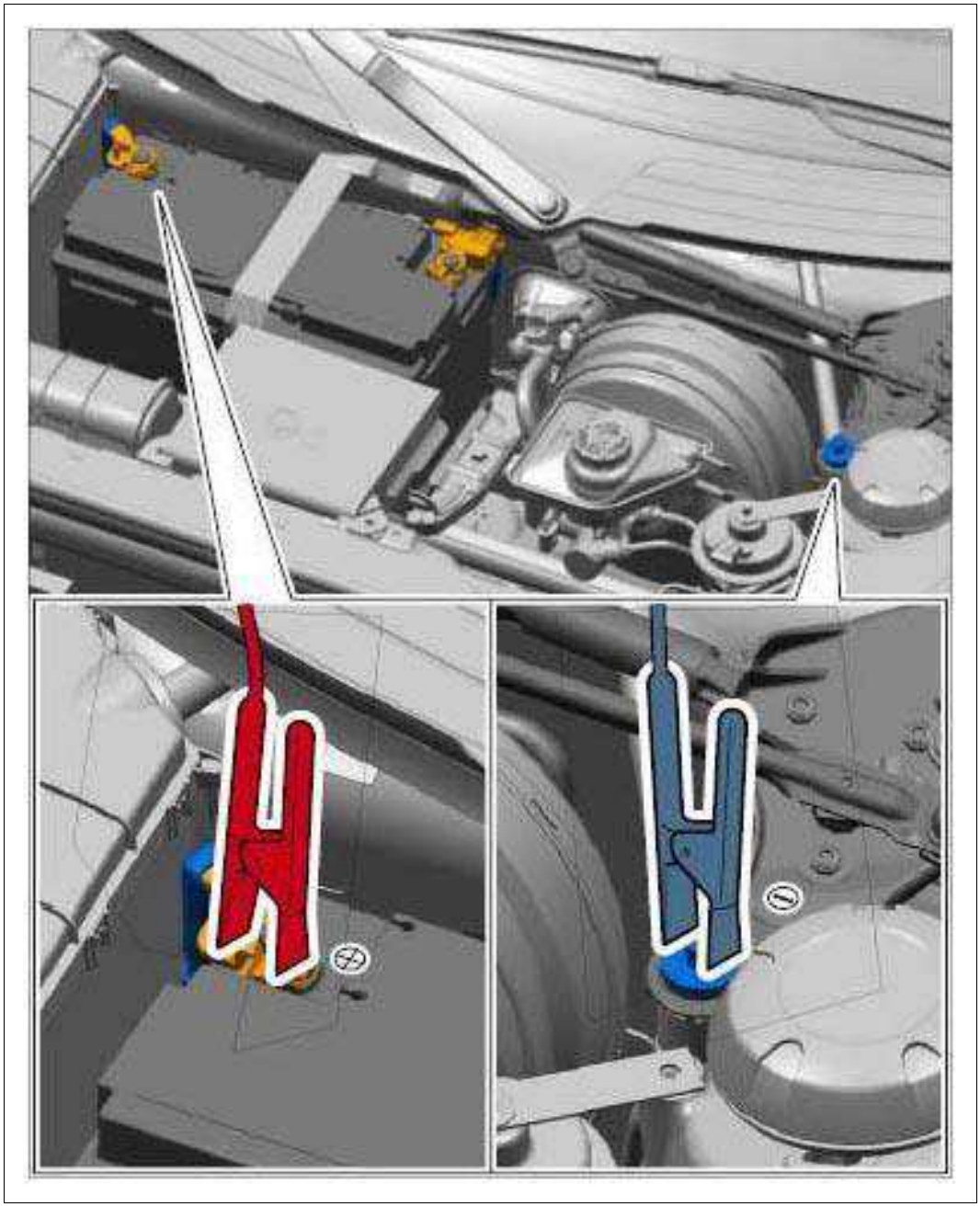

Courtesy of PORSCHE CARS NORTH AMERICA, INC.

2. Switch off all loads.

3. Switch on the charger.

WM 2X00IN BATTERY TRICKLE CHARGING (EXCEPT CARRERA "EDITION", CARRERA CABRIOLET "EDITION", CARRERA 4 "EDITION", TARGA 4, TARGA 4S, TARGA 4 GTS, CARR. 4 CABRIO, CARR. 4S CABRIO, TURBO CABRIO, CARR. 4 GTS CABRIO, TURBO S CABRIO, CARRERA 4 CABRIOLET "EDITION") > SUBSEQUENT WORK

1. Disconnect rapid-start battery charger from the vehicle battery.

2. Install cover. → Installing Cover

WM 2X00IN EXTERNAL POWER CONNECTION, JUMP-LEAD STARTING (EXCEPT CARRERA "EDITION", CARRERA CABRIOLET "EDITION", CARRERA 4 "EDITION", TARGA 4, TARGA 4S, TARGA 4 GTS, CARR. 4 CABRIO, CARR. 4S CABRIO, TURBO CABRIO, CARR. 4 GTS CABRIO, TURBO S CABRIO, CARRERA 4 CABRIOLET "EDITION") > INFORMATION > EXTERNAL POWER CONNECTION, JUMP-LEAD STARTING

WARNING: Live jump leads

- *Risk of electric shock*
- *Risk of short circuit*

→ Route the jump leads so that they do not become entangled in moving parts in the engine compartment.

→ There must be no contact between the vehicles.

NOTE: Using charging cables/jump leads directly on the vehicle battery.

- *Risk of damage to battery sensors.*

→ Always connect charging cables/jump leads to the external power supply for jump-lead starting.

Information

- If the battery is flat, jump leads can be used together with the battery of another vehicle to start the car or to supply external power to the vehicle.

Both batteries must be 12 V batteries.

The capacity (Ah) of the donor battery must not be significantly lower than that of the flat battery.

The flat battery must be properly connected to the vehicle electrical system.

1. Remove cover. → Removing Cover
2. Connect jump leads.
    1. 2.1. Connect the positive cable to the positive terminal of the vehicle battery for jump-lead starting first, then to the positive terminal of the donor battery.
    2. 2.2. Connect the negative cable to the negative terminal of the donor battery first, then to the ground point for jump-lead starting.

Fig 1: Identifying Battery External Power Connection

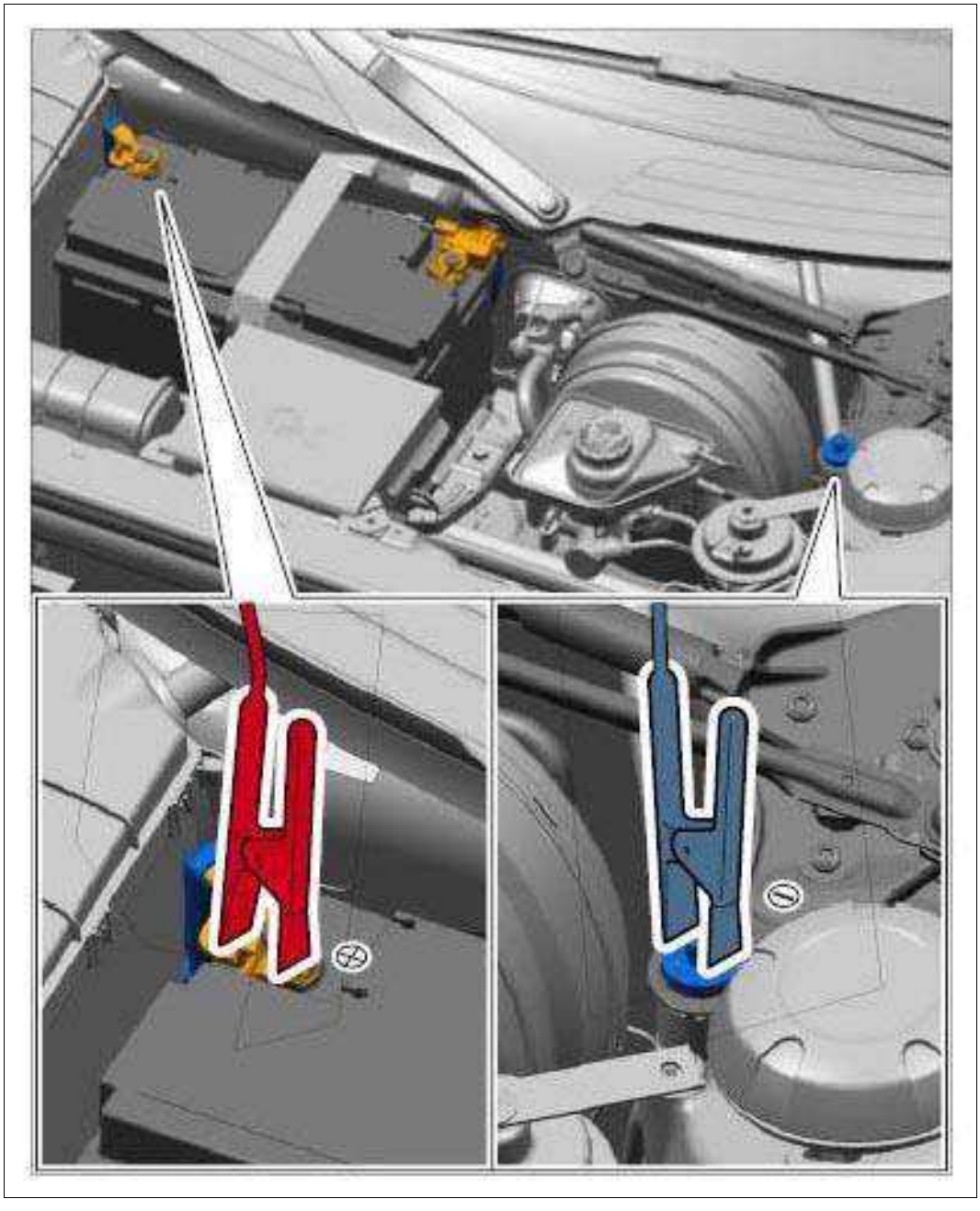

Courtesy of PORSCHE CARS NORTH AMERICA, INC.

3. Have the engine of the vehicle supplying the power running at high revs.
4. Start the engine. Do not spend longer than 15 seconds trying to start the vehicle with the jump leads - after 15 seconds have elapsed, wait for at least one minute.
5. Disconnect the two jump leads in reverse sequence when the engine is running.
6. Install cover. → Installing Cover

WM 2X00IN GENERAL INFORMATION ON THE VEHICLE BATTERY (EXCEPT CARRERA "EDITION", CARRERA CABRIOLET "EDITION", CARRERA 4 "EDITION", TARGA 4, TARGA 4S, TARGA 4 GTS, CARR. 4 CABRIO, CARR. 4S CABRIO, TURBO

CABRIO, CARR. 4 GTS CABRIO, CARRERA 4 CABRIOLET "EDITION") > TOOLS

Designation	Type	Number	Description
PIWIS Tester II	Special tool	9818	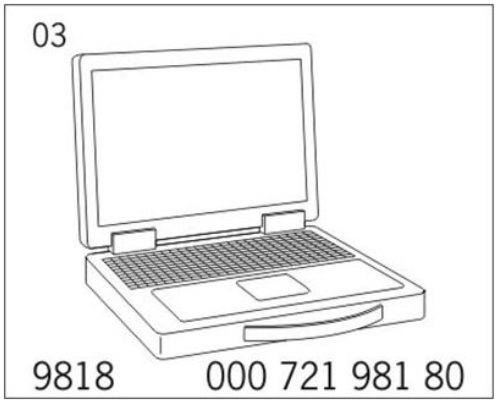

WM 2X00IN GENERAL INFORMATION ON THE VEHICLE BATTERY (EXCEPT CARRERA "EDITION", CARRERA CABRIOLET "EDITION", CARRERA 4 "EDITION", TARGA 4, TARGA 4S, TARGA 4 GTS, CARR. 4 CABRIO, CARR. 4S CABRIO, TURBO CABRIO, CARR. 4 GTS CABRIO, CARRERA 4 CABRIOLET "EDITION") > TECHNICAL VALUES

Location	Description	Type	Basic value	Tolerance 1	Tolerance 2
Battery terminal	1, 2	Tightening torque	6 Nm (4.5 ftlb.)	+/-0.5 Nm (+/-0.5 ftlb.)	

WM 2X00IN GENERAL INFORMATION ON THE VEHICLE BATTERY (EXCEPT CARRERA "EDITION", CARRERA CABRIOLET "EDITION", CARRERA 4 "EDITION", TARGA 4, TARGA 4S, TARGA 4 GTS, CARR. 4 CABRIO, CARR. 4S CABRIO, TURBO CABRIO, CARR. 4 GTS CABRIO, CARRERA 4 CABRIOLET "EDITION") > INFORMATION

Information

The AGM (**A** bsorbent **G** lass **M** at) battery is a **maintenance-free** , **sealed** battery.

- This battery must not be opened. If the battery is opened, it must be replaced.
- There is a serial number -A- and a part number -B- on the top right-hand side of the battery.

Fig 1: Identifying Battery Symbols

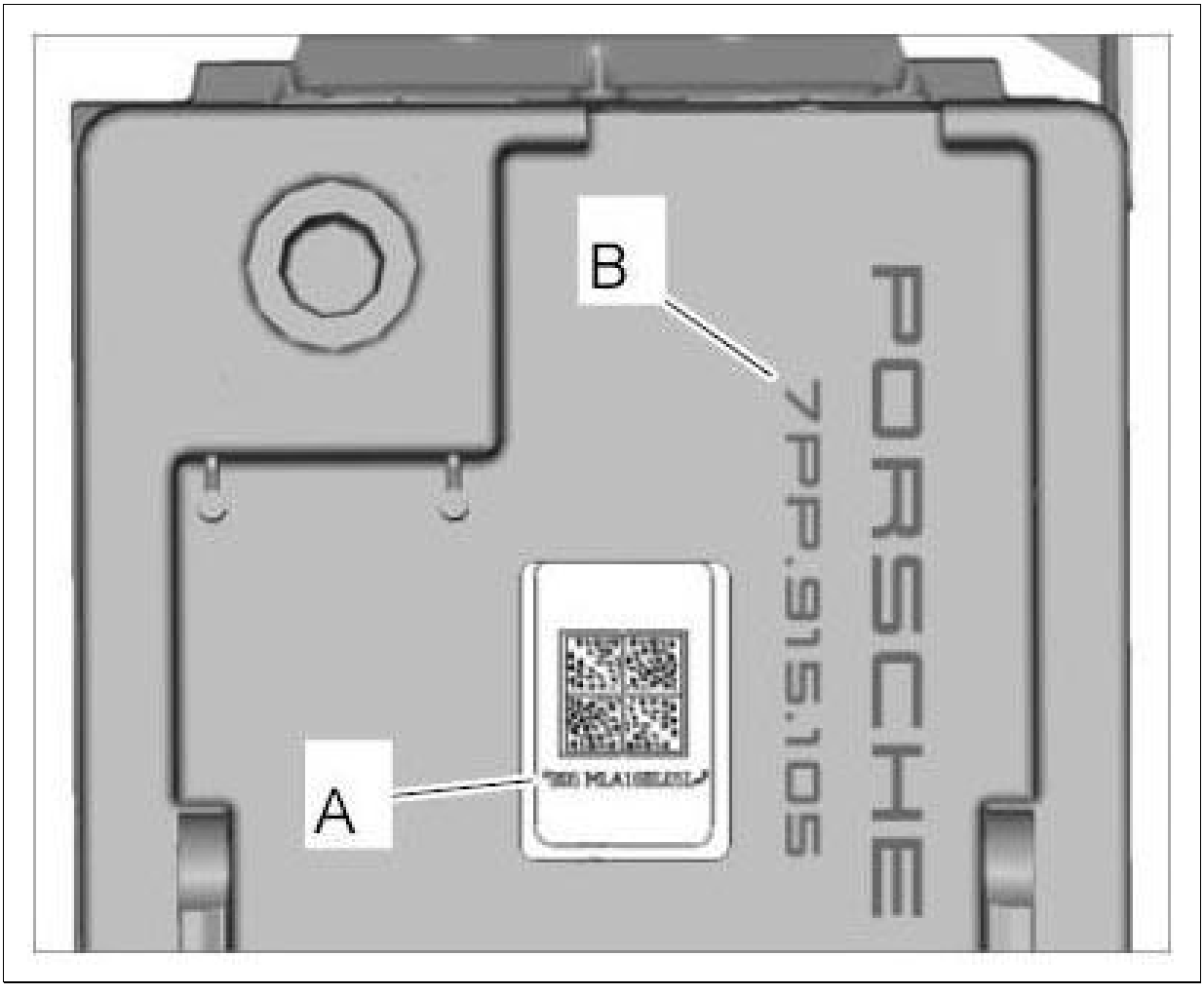

Courtesy of PORSCHE CARS NORTH AMERICA, INC.

- If the battery is replaced, both numbers must be entered in the gateway control unit under: Gateway/Maintenance, repairs/Change battery .
- It is also important to enter the battery size and battery manufacturer when changing the battery.

Information

- To prevent contact corrosion, only approved bolts, nuts, washers, etc. should be used. These elements have a special surface coating and must be stored separately.

The battery is one of the most important electrical components in the vehicle. Fault-free functioning of the battery contributes greatly to customer satisfaction. To guarantee long and efficient operation, the battery must be checked and maintained according to the description in this information.

Besides the start function, the battery also has the tasks of buffer and supplier of electrical power for the entire vehicle electrical system.

The Panamera (G1) is fitted with an AGM (**A** bsorbent **G** lass **M** at) battery as standard. The AGM battery offers the following advantages, for example:

- Sealed, valve-regulated battery
- High-cycle battery
- High cold-start performance
- Cannot leak or tilt
- Totally maintenance-free
- Shake-resistant
- No acid leakage if the housing is damaged
- Flexible installation and safe to handle
- High load capacity and longer service life
- Ideal for Start/Stop function

WM 2X00IN GENERAL INFORMATION ON THE VEHICLE BATTERY (EXCEPT CARRERA "EDITION", CARRERA CABRIOLET "EDITION", CARRERA 4 "EDITION", TARGA 4, TARGA 4S, TARGA 4 GTS, CARR. 4 CABRIO, CARR. 4S CABRIO, TURBO CABRIO, CARR. 4 GTS CABRIO, CARRERA 4 CABRIOLET "EDITION") > INFORMATION > HANDLING THE VEHICLE BATTERY

Information

- Battery terminals do not need to be greased.
- The battery terminal clamps should only be attached by hand - without excessive force - to prevent damage to the battery.
- The tightening torque for the battery terminals is → Tightening torque: 6 Nm (4.5 ftlb.)+/-0.5 Nm (+/-0.5 ftlb.) .
- If the battery is reconnected, proceed according to → WM 2X00IN WORK INSTRUCTIONS AFTER DISCONNECTING THE BATTERY .

Fig 1: Turning Battery Terminals

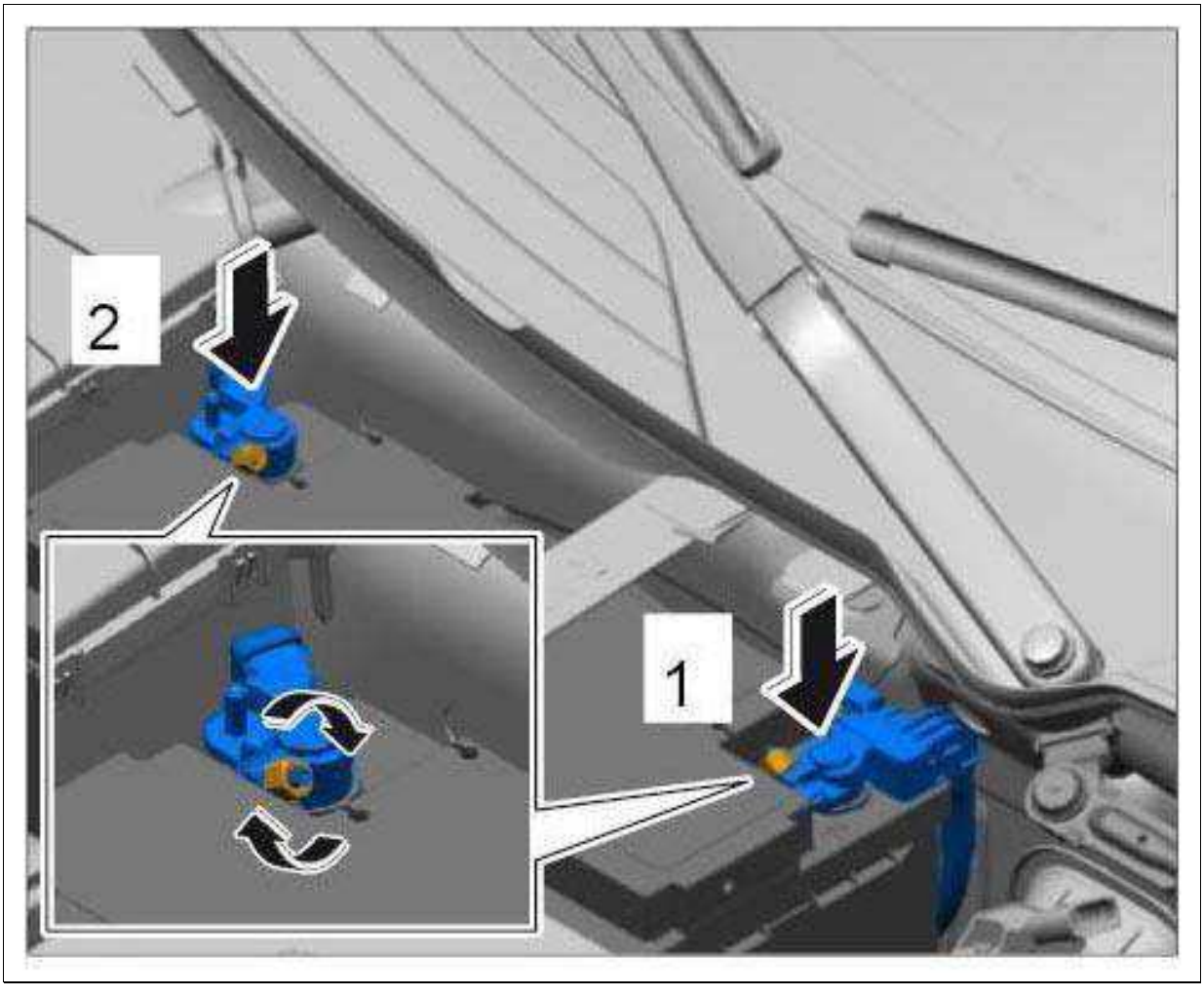

Courtesy of PORSCHE CARS NORTH AMERICA, INC.

WM 2X00IN GENERAL INFORMATION ON THE VEHICLE BATTERY (EXCEPT CARRERA "EDITION", CARRERA CABRIOLET "EDITION", CARRERA 4 "EDITION", TARGA 4, TARGA 4S, TARGA 4 GTS, CARR. 4 CABRIO, CARR. 4S CABRIO, TURBO CABRIO, CARR. 4 GTS CABRIO, CARRERA 4 CABRIOLET "EDITION") > INFORMATION > WARNING NOTES AND SAFETY REGULATIONS FOR BATTERIES

1. **-1-** Fire, sparks, naked flames and smoking are forbidden:
    1. Avoid sparking when using cables and electrical devices.
    2. Avoid short circuits.
    3. In batteries with central venting, there is an increased concentration of detonating gas at the hose opening. The venting hose must not be bent or blocked by dirt.

Fig 1: Identifying Battery Symbols

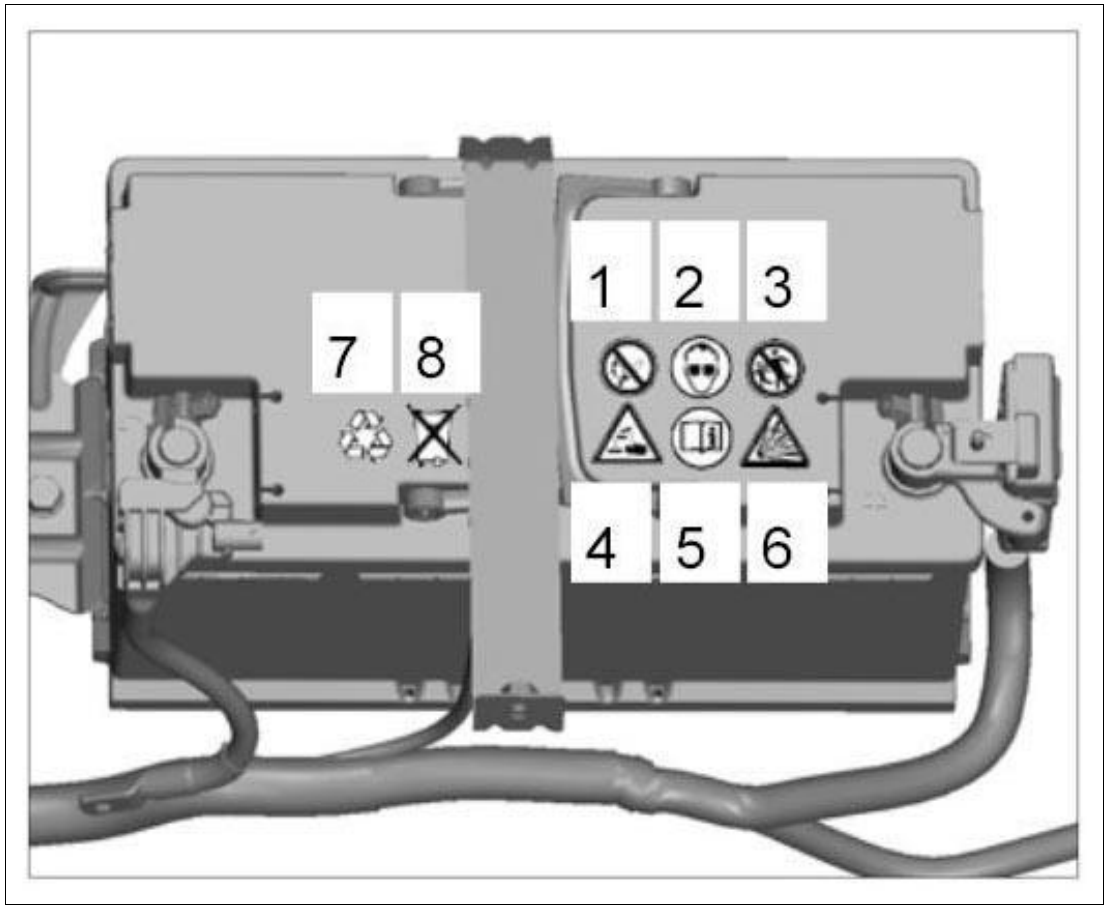

Courtesy of PORSCHE CARS NORTH AMERICA, INC.

2. **-2-** Wear eye protection.

3. **-3-** Keep children away from acids and batteries.

4. **-4-** Risk of caustic burns:

    1. Battery acid is highly caustic, therefore wear protective gloves.

    2. Do not tilt the battery; acid can emerge from the vent opening.

Information

1. First aid: Rinse acid splashes in the eyes immediately with clean water for a few minutes. Consult a doctor immediately. Neutralize acid splashes on the skin or clothing immediately with soap suds and rinse again with plenty of water. If acid has been drunk unintentionally, consult a doctor immediately.

5. **-5-** Follow the instructions on the battery, in the Technical Information and in the Driver's Manual.

6. **-6-** Risk of explosion:

    1. A highly explosive detonating gas mixture occurs when charging batteries.

7. **-7-** Disposal:

1. Hand in old batteries at a collection point.

8. **-8-** Never dispose of old batteries in domestic rubbish!

WM 2X00IN GENERAL INFORMATION ON THE VEHICLE BATTERY (EXCEPT CARRERA "EDITION", CARRERA CABRIOLET "EDITION", CARRERA 4 "EDITION", TARGA 4, TARGA 4S, TARGA 4 GTS, CARR. 4 CABRIO, CARR. 4S CABRIO, TURBO CABRIO, CARR. 4 GTS CABRIO, CARRERA 4 CABRIOLET "EDITION") > INFORMATION > REMOVING AND INSTALLING BATTERY

NOTE: A battery charger for providing an external power supply or for jump-lead starting is connected directly to the battery in the vehicle.

- *Risk of damage to the battery sensor.*
- *Battery sensor sends incorrect battery values to the vehicle electrical system.*

→ Always connect a battery charger for providing an external power supply or for jump-lead starting to the defined connections in the engine compartment. → 2X00IN BATTERY TRICKLE CHARGING

Information

- The battery is located in the technical equipment space.
- In order to avoid triggering the siren in vehicles with an additional alarm siren, the battery must be disconnected while the ignition is on!
- All loads must be switched off beforehand! Remove ignition key!
- Never disconnect battery with engine running!
- Never start engine without a securely connected battery!
- To prevent damage to the battery, the battery terminal clamps should only be attached by hand - without excessive force.
- Check that the battery is seated correctly after installation. A loose battery presents other dangers, such as: - Reduced service life due to vibration damage. - Noises. - Damage to the battery housing from mounting parts. - Inadequate crash safety.

Information

- State-of-the-art batteries have central venting.
- In certain battery states, the gas produced during charging can emerge centrally through an opening on the upper cover side. Backfire protection is integrated at the same position, which prevents the ignition of the combustible gas present in the battery.
- In batteries with a hose/pipe for central venting, make sure that the hose is not pinched. Only then can the battery be freely vented.

WM 2X00IN GENERAL INFORMATION ON THE VEHICLE BATTERY (EXCEPT

CARRERA "EDITION", CARRERA CABRIOLET "EDITION", CARRERA 4 "EDITION", TARGA 4, TARGA 4S, TARGA 4 GTS, CARR. 4 CABRIO, CARR. 4S CABRIO, TURBO CABRIO, CARR. 4 GTS CABRIO, CARRERA 4 CABRIOLET "EDITION") > INFORMATION > VISUAL INSPECTION

Before taking measurements, e.g. measuring the open-circuit voltage or before carrying out the battery load test, a visual inspection of the battery must be performed.

This inspection can be used to determine:

- Whether the housing of the battery is damaged. The leak-free operation and function of the battery cannot be guaranteed if the housing is damaged.
- Whether the battery terminals (battery line connections) are damaged. Contact of the line connections cannot be guaranteed if the battery terminals are damaged. This can cause a line fire and malfunctions in the electrical system.

WM 2X00IN GENERAL INFORMATION ON THE VEHICLE BATTERY (EXCEPT CARRERA "EDITION", CARRERA CABRIOLET "EDITION", CARRERA 4 "EDITION", TARGA 4, TARGA 4S, TARGA 4 GTS, CARR. 4 CABRIO, CARR. 4S CABRIO, TURBO CABRIO, CARR. 4 GTS CABRIO, CARRERA 4 CABRIOLET "EDITION") > INFORMATION > OPEN-CIRCUIT VOLTAGE MEASUREMENT

Information

- Compared with the value from PIWIS Tester II 9818 , the battery voltage can be measured using a hand-held multimeter.
- Proceed as follows:

Information

The open-circuit voltage measurement should be read out using **PIWIS Tester II 9818** in the **Gateway** control unit by selecting **Energy management** , **Quick closed-circuit current measurement** in the menu.

1. Switch off ignition and remove ignition key.
2. Disconnect ground strap on the battery.

   Information

   1. After charging and waiting for at least 2 hours, during which time the battery should neither be loaded nor charged:
3. Measure the battery voltage with a hand-held multimeter.
   1. The battery open-circuit voltage must not fall below 12.5 V.
   2. If the hand-held multimeter shows 12.5 V or more, the battery voltage is OK.
   3. If the hand-held multimeter shows a battery voltage of less than 12.5 V, charge the battery.

WM 2X00IN GENERAL INFORMATION ON THE VEHICLE BATTERY (EXCEPT CARRERA "EDITION", CARRERA CABRIOLET "EDITION", CARRERA 4 "EDITION", TARGA 4, TARGA 4S, TARGA 4 GTS, CARR. 4 CABRIO, CARR. 4S CABRIO, TURBO CABRIO, CARR. 4 GTS CABRIO, CARRERA 4 CABRIOLET "EDITION") > INFORMATION > CHARGING THE BATTERY

WARNING: Highly inflammable or explosive materials

- *Danger of fire or explosion*

→ Avoid contact with hot parts or sources of ignition.

→ Use suction to remove ignitable vapors.

→ Attach warning sign in a clearly visible position.

Information

- A battery charger is required.
- Read operating instructions for the charger.
- The battery must have a minimum temperature of 0 °C.
- If possible, do not rapid-charge batteries as this can damage them.
- If exhaustively discharged batteries are charged quickly, they will not take up a charge current or they will be identified too early as full due to the so-called "surface charge".

NOTE: A battery charger for providing an external power supply or for jump-lead starting is connected directly to the battery in the vehicle.

- *Risk of damage to the battery sensor.*
- *Battery sensor sends incorrect battery values to the vehicle electrical system.*

→ Always connect a battery charger for providing an external power supply or for jump-lead starting to the defined connections in the engine compartment. → 2X00IN BATTERY TRICKLE CHARGING

1. Switch off battery charger.
2. Switch off ignition and remove ignition key.
3. Connect wires from the charger to the external power supply points.
4. Set the charge current on the battery charger according to the battery capacity.
5. Switch on battery charger.

Procedure for charging exhaustively discharged batteries:

Batteries which are not in operation for a long period of time discharge.

A battery is exhaustively discharged if the open-circuit voltage has fallen below 11.6 V.See OPEN-CIRCUIT VOLTAGE MEASUREMENT

In exhaustively discharged batteries, the battery acid (sulphuric acid and water mixture) consists of virtually only water, as the sulphuric acid proportion is considerably reduced.

Exhaustively discharged batteries sulphatise, i.e. the entire plate surfaces of the batteries harden.

If exhaustively discharged batteries are immediately recharged after an exhaustive discharge, the sulphatisation recedes again.

If these batteries are not recharged, the plates continue to harden and charge take-up ability is limited. A reduction in the battery performance is the result.

Exhaustively discharged batteries must be charged with a low charge current as follows:

1. Set the charge current to maximum 10 % of battery capacity, i.e. with a 95 Ah battery, the charge current is max. 9.5 A.

6. Charge the battery.

WM 2X00IN GENERAL INFORMATION ON THE VEHICLE BATTERY (EXCEPT CARRERA "EDITION", CARRERA CABRIOLET "EDITION", CARRERA 4 "EDITION", TARGA 4, TARGA 4S, TARGA 4 GTS, CARR. 4 CABRIO, CARR. 4S CABRIO, TURBO CABRIO, CARR. 4 GTS CABRIO, CARRERA 4 CABRIOLET "EDITION") > INFORMATION > BATTERY TRICKLE CHARGING

Information

- When working or carrying out tests on the vehicle or when the vehicle is in the workshop, a battery charger with a rated current of at least 40 A must be connected.
- As soon as the vehicle is unlocked, e.g. the vehicle is in the workshop or salesroom, it must be trickle charged with a battery charging device.

1. Switch off battery charger.
2. Switch off ignition and remove remote control (hand-held transmitter).
3. Switch off all loads (e.g. lights).
4. Connect the positive cable to the positive terminal for jump-lead starting **-+-** first, then to the positive terminal of the donor battery.
5. Connect the negative cable to the negative terminal of the donor battery first, then to the ground point for jump-lead starting **-** .

Fig 1: Identifying Battery External Power Connection

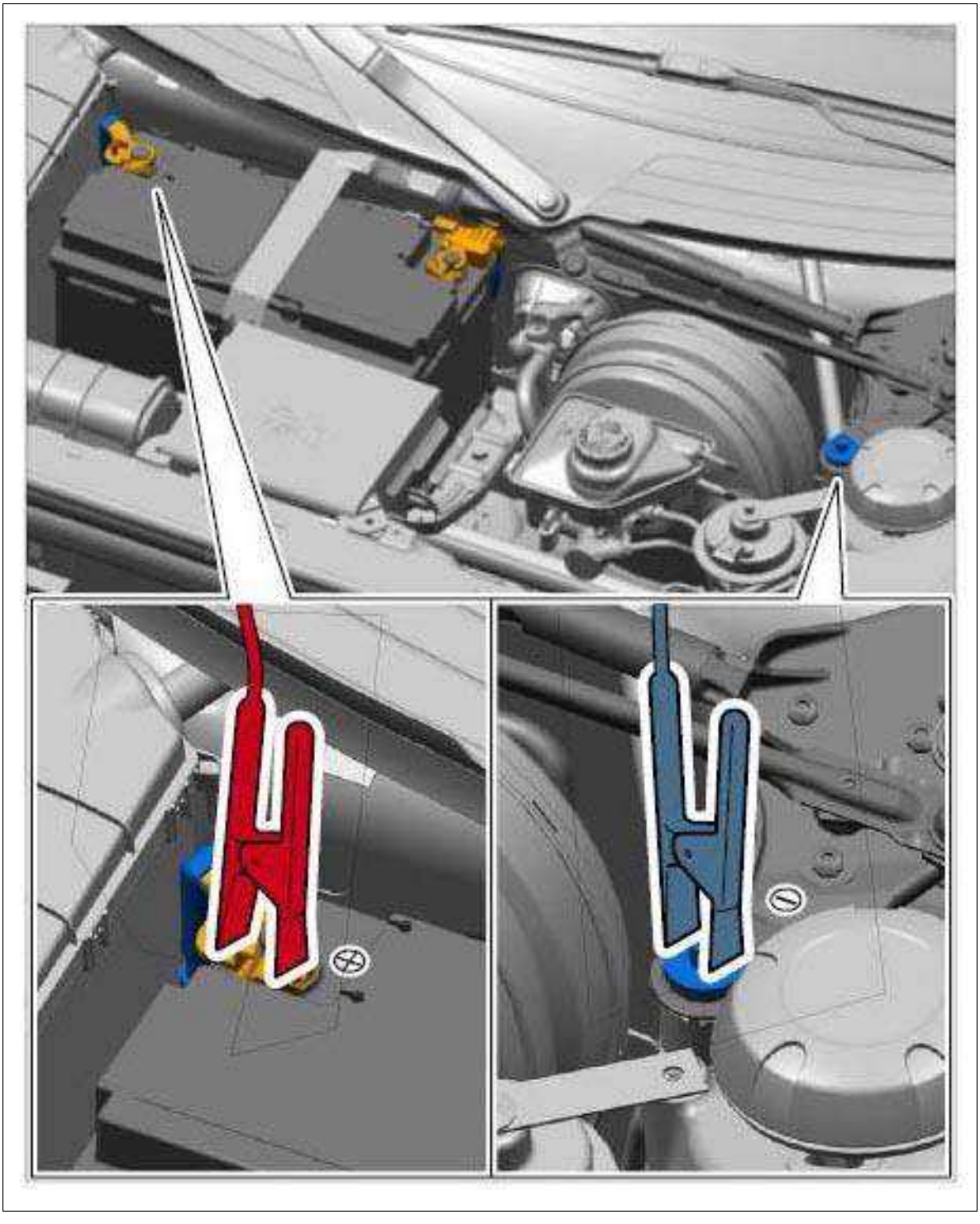

Courtesy of PORSCHE CARS NORTH AMERICA, INC.

6. Set the charge current on the battery charger according to the battery capacity.
7. Switch on battery charger.

WM 2X00IN GENERAL INFORMATION ON THE VEHICLE BATTERY (EXCEPT CARRERA "EDITION", CARRERA CABRIOLET "EDITION", CARRERA 4 "EDITION", TARGA 4, TARGA 4S, TARGA 4 GTS, CARR. 4 CABRIO, CARR. 4S CABRIO, TURBO

CABRIO, CARR. 4 GTS CABRIO, CARRERA 4 CABRIOLET "EDITION") > INFORMATION > CONNECTING THE BATTERY FOR TRICKLE CHARGING

Information

A charger with a current rating of at least 40 A must be connected to the external power supply points/jump-lead starting points.

Set the charger to maximum A (amps).

Switch off all unnecessary loads (e.g. lights).

When working on the vehicle for more than 15 minutes.

When running a diagnosis using the Porsche System Tester.

When adjusting the headlights

When working on or with the Infotainment system.

If the doors, bonnet and rear lid are open for a long period of time or if these components are actuated frequently.

WM 2X00IN IMPORTANT INFORMATION ON ADAPTING THE DME CONTROL UNIT (EXCEPT CARRERA "EDITION", CARRERA CABRIOLET "EDITION", CARRERA 4 "EDITION", TARGA 4, TARGA 4S, TARGA 4 GTS, CARR. 4 CABRIO, CARR. 4S CABRIO, TURBO CABRIO, CARR. 4 GTS CABRIO, CARRERA 4 CABRIOLET "EDITION") > INFORMATION

Information

1. Adaptation values are deleted or stored in EEPROM when ignition is switched off after control unit run-on has ended.

   This depends on the run-on period of the engine compartment purge fan.

   The run-on period of the engine compartment purge fan AFTER ignition is switched off depends on the engine compartment temperature.

   The run-on period is as follows at the following engine compartment temperatures:

   1. < 45 °C: approx. 50 seconds
   2. 45... 70 °C: approx. 200 seconds
   3. > 70 °C: up to 20 minutes

2. The following adaptations will be deleted automatically when you erase the fault memory (see information under 1)):

   1. Mixture adaptation
   2. Lambda adaptation
   3. Camshaft adaptation

4. Knock adaptation
5. Map-controlled thermostat adaptation

WM 2X00IN IMPORTANT INFORMATION ON ADAPTING THE DME CONTROL UNIT (EXCEPT CARRERA "EDITION", CARRERA CABRIOLET "EDITION", CARRERA 4 "EDITION", TARGA 4, TARGA 4S, TARGA 4 GTS, CARR. 4 CABRIO, CARR. 4S CABRIO, TURBO CABRIO, CARR. 4 GTS CABRIO, CARRERA 4 CABRIOLET "EDITION") > DELETING ADAPTATION VALUES > ALL ADAPTATIONS

Necessary after:

- Replacing engine

Information

The RBM data is also deleted here.

How?

1. PIWIS Tester:
    1. 1.1. Meet preconditions:
        1. 1.1.1. Engine off.
        2. 1.1.2. Ignition on.
        3. 1.1.3. Engine cold.
    2. 1.2. Select menu:
        1. 1.2.1. DME
        2. 1.2.2. Programming
        3. 1.2.3. Automatic programming
    3. 1.3. Start function by pressing [F8].

WM 2X00IN IMPORTANT INFORMATION ON ADAPTING THE DME CONTROL UNIT (EXCEPT CARRERA "EDITION", CARRERA CABRIOLET "EDITION", CARRERA 4 "EDITION", TARGA 4, TARGA 4S, TARGA 4 GTS, CARR. 4 CABRIO, CARR. 4S CABRIO, TURBO CABRIO, CARR. 4 GTS CABRIO, CARRERA 4 CABRIOLET "EDITION") > DELETING ADAPTATION VALUES > FUEL HIGH-PRESSURE ADAPTATION

Necessary after:

- Replacing high-pressure pump
- All work that must be carried out as a result of high-pressure faults, e.g. electric fuel pump, control unit for electric fuel pump, etc.

WM 2X00IN IMPORTANT INFORMATION ON ADAPTING THE DME CONTROL UNIT (EXCEPT CARRERA "EDITION", CARRERA CABRIOLET "EDITION", CARRERA 4 "EDITION", TARGA 4, TARGA 4S, TARGA 4 GTS, CARR. 4 CABRIO, CARR. 4S CABRIO, TURBO CABRIO, CARR. 4 GTS CABRIO, CARRERA 4 CABRIOLET "EDITION") > DELETING ADAPTATION VALUES > OIL PRESSURE ADAPTATION

Necessary after:

- Replacing oil pump
- Replacing oil pressure control valve

WM 2X00IN IMPORTANT INFORMATION ON ADAPTING THE DME CONTROL UNIT (EXCEPT CARRERA "EDITION", CARRERA CABRIOLET "EDITION", CARRERA 4 "EDITION", TARGA 4, TARGA 4S, TARGA 4 GTS, CARR. 4 CABRIO, CARR. 4S CABRIO, TURBO CABRIO, CARR. 4 GTS CABRIO, CARRERA 4 CABRIOLET "EDITION") > DELETING ADAPTATION VALUES > LAMBDA CONTROLLER ADAPTATION

Necessary after:

- Replacing high-pressure injectors
- Correcting faults during load detection, mixture control, emissions measurement

WM 2X00IN IMPORTANT INFORMATION ON ADAPTING THE DME CONTROL UNIT (EXCEPT CARRERA "EDITION", CARRERA CABRIOLET "EDITION", CARRERA 4 "EDITION", TARGA 4, TARGA 4S, TARGA 4 GTS, CARR. 4 CABRIO, CARR. 4S CABRIO, TURBO CABRIO, CARR. 4 GTS CABRIO, CARRERA 4 CABRIOLET "EDITION") > DELETING ADAPTATION VALUES > NEUTRAL GEAR SWITCH ADAPTATION (MANUAL TRANSMISSION ONLY)

Necessary after:

- Replacing neutral gear switch
- Removing and installing transmission
- Removing and installing shift and selector cables

WM 2X00IN IMPORTANT INFORMATION ON ADAPTING THE DME CONTROL UNIT (EXCEPT CARRERA "EDITION", CARRERA CABRIOLET "EDITION", CARRERA 4 "EDITION", TARGA 4, TARGA 4S, TARGA 4 GTS, CARR. 4 CABRIO, CARR. 4S CABRIO, TURBO CABRIO, CARR. 4 GTS CABRIO, CARRERA 4 CABRIOLET "EDITION") > DELETING ADAPTATION VALUES > INTAKE MANIFOLD PRESSURE SENSOR ADAPTATION

Necessary after:

- Replacing intake manifold pressure sensor

How?

1. PIWIS Tester:
    1. 1.1. Meet preconditions:
        1. 1.1.1. Engine off.
        2. 1.1.2. Ignition on.
        3. 1.1.3. Engine cold.
    2. 1.2. Select menu:
        1. 1.2.1. DME
        2. 1.2.2. Maintenance/repairs
        3. 1.2.3. Delete adaptation values
    3. 1.3. Press [F12] to continue.
        1. 1.3.1. Information on deleting adaptation values
    4. 1.4. Press [F8] to confirm.
        1. 1.4.1. Submenu of adaptation ranges
    5. 1.5. Select adaptation range and press [F12] to continue.

       Information

       1. Adaptation values are deleted or stored in EEPROM when ignition is switched off after control unit run-on has ended.

       This depends on the run-on period of the engine compartment purge fan.

       The run-on period of the engine compartment purge fan AFTER ignition is switched off depends on the engine compartment temperature.

       The run-on period is as follows at the following engine compartment temperatures:

       1. < 45 °C: approx. 50 seconds
       2. 45... 70 °C: approx. 200 seconds
       3. > 70 °C: up to 20 minutes
    6. 1.6. Switch off ignition.
    7. 1.7. Adapt throttle valve (see below).

WM 2X00IN IMPORTANT INFORMATION ON ADAPTING THE DME CONTROL UNIT (EXCEPT CARRERA "EDITION", CARRERA CABRIOLET "EDITION", CARRERA 4 "EDITION", TARGA 4, TARGA 4S, TARGA 4 GTS, CARR. 4 CABRIO, CARR. 4S

CABRIO, TURBO CABRIO, CARR. 4 GTS CABRIO, CARRERA 4 CABRIOLET "EDITION") > WRITING ADAPTATION VALUES (FOLLOWING DELETION) > SENSOR WHEEL ADAPTATION

Necessary after:

- Re-programming DME control unit
- Replacing DME control unit

Necessary before:

- Misfire diagnostics

How?

1. Drive with engine overrun:
    1. 1.1. Meet preconditions:
        1. 1.1.1. Engine at operating temperature.
    2. 1.2. Accelerate to 3, 000 RPM (U/Min) three times in quick succession in 2nd gear and allow vehicle to roll with gear engaged (engine overrun).

       Information

        1. Adaptation values are deleted or stored in EEPROM when ignition is switched off after control unit run-on has ended.

       This depends on the run-on period of the engine compartment purge fan.

       The run-on period of the engine compartment purge fan AFTER ignition is switched off depends on the engine compartment temperature.

       The run-on period is as follows at the following engine compartment temperatures:

        1. < 45 °C: approx. 50 seconds
        2. 45... 70 °C: approx. 200 seconds
        3. > 70 °C: up to 20 minutes
    3. 1.3. Switch off ignition.

WM 2X00IN IMPORTANT INFORMATION ON ADAPTING THE DME CONTROL UNIT (EXCEPT CARRERA "EDITION", CARRERA CABRIOLET "EDITION", CARRERA 4 "EDITION", TARGA 4, TARGA 4S, TARGA 4 GTS, CARR. 4 CABRIO, CARR. 4S CABRIO, TURBO CABRIO, CARR. 4 GTS CABRIO, CARRERA 4 CABRIOLET "EDITION") > WRITING ADAPTATION VALUES (FOLLOWING DELETION) > NEUTRAL GEAR SWITCH - ADAPTATION (MANUAL TRANSMISSION ONLY)

Necessary after:

- Re-programming DME control unit

- Replacing DME control unit
- Deleting adaptation values (see above)

Necessary before:

- Carrying out plausibility check on neutral gear switch to enable Start Stop system

How?

1. Drive in 1st gear
    1. 1.1. Clutch released fully
    2. 1.2. Accelerate to around 30 km/h (20 mph)
    3. 1.3. Release accelerator pedal and allow vehicle to roll with gear engaged (engine overrun) up to around 10 km/h (6 mph)
2. Drive in 2nd gear
    1. 2.1. Clutch released fully
    2. 2.2. Accelerate to around 30 km/h (20 mph)
    3. 2.3. Release accelerator pedal and allow vehicle to roll with gear engaged (engine overrun) up to around 10 km/h (6 mph)
3. Vehicle is stationary
    1. 3.1. Clutch released fully
    2. 3.2. Shift lever in neutral position.

       Do not touch shift lever for 10 seconds
4. Switch off ignition

WM 2X00IN IMPORTANT INFORMATION ON ADAPTING THE DME CONTROL UNIT (EXCEPT CARRERA "EDITION", CARRERA CABRIOLET "EDITION", CARRERA 4 "EDITION", TARGA 4, TARGA 4S, TARGA 4 GTS, CARR. 4 CABRIO, CARR. 4S CABRIO, TURBO CABRIO, CARR. 4 GTS CABRIO, CARRERA 4 CABRIOLET "EDITION") > OVERWRITING ADAPTATION VALUES (WITHOUT DELETION) > THROTTLE VALVE

Necessary after:

- Re-programming DME control unit
- Replacing DME control unit
- Replacing throttle valve

Information

Consequences of Tester adaptation if conditions for automatic adaptation are not met (violated boundary

condition):

- For a fault entry in the load detection range (P0068 + P1069... P1077), the limits are extended in order to prevent incorrect detections.
- This extension is cancelled if an adaptation is performed when the conditions for automatic adaptation are met, or after 15 warm-up cycles at the latest.
- (Warm-up cycle = coolant temperature increases by more than 23 °C after start-up and reaches at least 73 ° C)
- Following manual throttle valve adaptation when ambient conditions are not met, throttle valve adaptation is carried out again automatically as soon as the ambient conditions are met.
- There is NO 30-second waiting time here, but a slightly delayed engine start is possible once.

The ambient conditions for automatic adaptation are as follows:

- Engine off and ignition on for > 30 seconds
- Accelerator pedal not pressed
- Vehicle is stationary
- Power supply for throttle valve adjusting unit is OK
- Coolant temperature 5 °C... 100 °C
- Intake air temperature 5 °C... 30 °C

How?

1. Ignition on > 30 seconds if preconditions are met.

   or

   PIWIS Tester:

   1. 1.1. Meet preconditions:
      1. 1.1.1. Engine off.
      2. 1.1.2. Ignition on.
   2. 1.2. Select menu:
      1. 1.2.1. DME
      2. 1.2.2. Maintenance/repairs
      3. 1.2.3. Adaptations
      4. 1.2.4. Throttle valve adaptation
   3. 1.3. Start function by pressing [F12].
      1. 1.3.1. Information
   4. 1.4. Press [F12] for detail view.

Information

1. Adaptation values are deleted or stored in EEPROM when ignition is switched off after control unit run-on has ended.

This depends on the run-on period of the engine compartment purge fan.

The run-on period of the engine compartment purge fan AFTER ignition is switched off depends on the engine compartment temperature.

The run-on period is as follows at the following engine compartment temperatures:

1. < 45 °C: approx. 50 seconds
2. 45... 70 °C: approx. 200 seconds
3. > 70 °C: up to 20 minutes

5. 1.5. Switch off ignition.

WM 2X00IN IMPORTANT INFORMATION ON ADAPTING THE DME CONTROL UNIT (EXCEPT CARRERA "EDITION", CARRERA CABRIOLET "EDITION", CARRERA 4 "EDITION", TARGA 4, TARGA 4S, TARGA 4 GTS, CARR. 4 CABRIO, CARR. 4S CABRIO, TURBO CABRIO, CARR. 4 GTS CABRIO, CARRERA 4 CABRIOLET "EDITION") > TORQUE LOSS > ONLY NECESSARY FOR VEHICLES WITH PDK

Necessary after:

- Re-programming DME control unit
- Replacing DME control unit
- Re-programming PDK control unit

Necessary before:

- Re-calibrating PDK

Information

The accelerator pedal must always be pressed after approx. 1.5 minutes since each adaptation step is limited to 5 Nm.

How?

1. Engine idling:

    1. 1.1. Meet preconditions:

        1. 1.1.1. Engine at operating temperature.

    2. 1.2. Engine idling for 3 minutes without activating loads, press accelerator pedal once after approx. 1.5 minutes during this time.

    3. 1.3. Engine idling for 3 minutes with air conditioning switched on, press accelerator pedal once after approx. 1.5 minutes during this time.

4. 1.4. Engine idling for 3 minutes with air conditioning switched on and transmission range engaged, press accelerator pedal once after approx. 1.5 minutes during this time.

   Information

   1. Adaptation values are deleted or stored in EEPROM when ignition is switched off after control unit run-on has ended.

   This depends on the run-on period of the engine compartment purge fan.

   The run-on period of the engine compartment purge fan AFTER ignition is switched off depends on the engine compartment temperature.

   The run-on period is as follows at the following engine compartment temperatures:

   1. < 45 °C: approx. 50 seconds
   2. 45... 70 °C: approx. 200 seconds
   3. > 70 °C: up to 20 minutes

5. 1.5. Switch off ignition.

WM 2X00IN WORK INSTRUCTIONS AFTER DISCONNECTING THE BATTERY (EXCEPT CARRERA "EDITION", CARRERA CABRIOLET "EDITION", CARRERA 4 "EDITION", TARGA 4, TARGA 4S, TARGA 4 GTS, CARR. 4 CABRIO, CARR. 4S CABRIO, TURBO CABRIO, CARR. 4 GTS CABRIO, CARRERA 4 CABRIOLET "EDITION") > TECHNICAL VALUES

Location	Description	Type	Basic value	Tolerance 1	Tolerance 2
Terminal clamp to battery		Tightening torque	6 Nm (4.5 ftlb.)	+/-0.5 Nm (+/-0.5 ftlb.)	

WM 2X00IN WORK INSTRUCTIONS AFTER DISCONNECTING THE BATTERY (EXCEPT CARRERA "EDITION", CARRERA CABRIOLET "EDITION", CARRERA 4 "EDITION", TARGA 4, TARGA 4S, TARGA 4 GTS, CARR. 4 CABRIO, CARR. 4S CABRIO, TURBO CABRIO, CARR. 4 GTS CABRIO, CARRERA 4 CABRIOLET "EDITION") > CONNECTING AND DISCONNECTING BATTERY

WARNING: Static battery charge

- *Battery can explode*
- *Electrical discharges*

→ Do not rub the battery with a dry cloth.

Information

Switch off all loads and remove the ignition key.

- Do not disconnect the battery while the engine is running.
- Disconnect and reconnect battery with extreme caution.
- Do not rub the battery with a dry cloth.

Information

The battery is located at the front in the radiator tank.

1. Remove cover. → Removing Cover
2. **Disconnect ground strap on the battery:**
    1. 2.1. Risk of short circuit! Disconnect the negative cable **-2-** on the battery.
    2. 2.2. Route or isolate the negative cable so that all contact with a ground carrier (e.g. body, battery terminal) is avoided.

    Fig 1: Disconnecting Battery Terminal Clamps

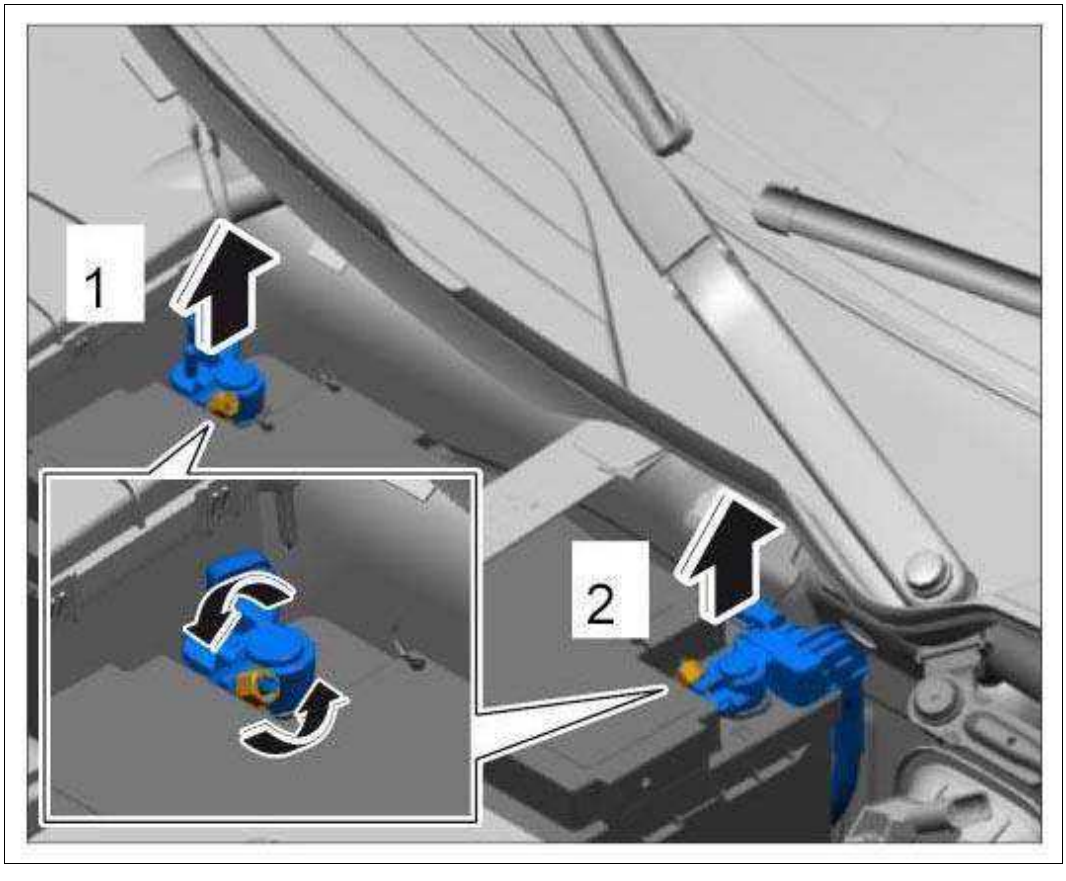

Courtesy of PORSCHE CARS NORTH AMERICA, INC.

3. **Connect the battery**
    1. 3.1. Connect the negative cable **-2-** to the battery terminal and secure it with the fastening nut.

→ **Tightening torque: 6 Nm (4.5 ftlb.)+/-0.5 Nm (+/-0.5 ftlb.)**

WM 2X00IN WORK INSTRUCTIONS AFTER DISCONNECTING THE BATTERY (EXCEPT CARRERA "EDITION", CARRERA CABRIOLET "EDITION", CARRERA 4 "EDITION", TARGA 4, TARGA 4S, TARGA 4 GTS, CARR. 4 CABRIO, CARR. 4S CABRIO, TURBO CABRIO, CARR. 4 GTS CABRIO, CARRERA 4 CABRIOLET "EDITION") > EFFECT OF DISCONNECTION OR TOTAL DISCHARGE OF BATTERY ON ELECTRICAL SYSTEMS IN THE VEHICLE AND THE PRECAUTIONS TO BE TAKEN

Information

Control unit memories

Values and faults stored in the control units can be deleted if the battery is disconnected or completely discharged.

- If possible, all fault memories should be checked and, if necessary, printed out before the battery is disconnected.

Information

Supply voltage fault entry

The entry "supply voltage" may be stored in various control units if the battery has been completely discharged.

- Delete the "supply voltage" entry from the control units in question.

Information

Ready status

In some countries (presently the U.S.A. and Canada), after disconnecting the battery, it is necessary to reach the Ready status by a test drive and/or by using the Porsche System Tester DME control module menu). If in doubt about this, contact the relevant importer.

Information

2470 DME control module

With all DME systems, the engine must run for several minutes before the engine control module can relearn the idle speed and mixture adaptation values!

After disconnection of the power supply, the idle speed might change or fluctuate briefly until the throttle valve adjusting unit has been readapted.

The mixture adaptation is also lost.

After the battery is connected:

With the DME, it is necessary to carry out a learning and adaptation routine as described below:

- Switch ignition on for 30 seconds without starting the engine.

- Do not actuate accelerator pedal.

This completes the adaptation of the throttle valve adjusting unit.

Information

Tyre pressure monitoring system

When the battery is disconnected and connected, the tire pressure is first displayed as "- - -".

- Once the battery has been disconnected and work is complete, the vehicle must be driven for a short distance.

The actual pressures will then be displayed again.

Information

4560 Steering angle sensor

The steering angle sensor must be reinitializes when the battery is disconnected and connected.

- Turn wheels to straight-ahead position.
- Switch ignition off and then on again twice.
- Start engine.
- From the straight-ahead position, turn steering wheel approx. 20° to the right, past the straight-ahead position.
- Drive the vehicle straight ahead for at least one second at a speed above 4 km/h (2.5 mph).

The steering angle sensor segment is recognized again in this process.

Once the sensor has been successfully initialized, the fault code that is stored in the fault memory is documented using the fault deletion counter.

The fault memory erases itself automatically.

The PSM indicator light in the instrument cluster goes out.

Information

Motor for sunroof

The limit positions of the sunroof are deleted from the control unit when the battery is disconnected and connected.

- Switch on ignition.
- Press the rocker switch to open until the sunroof is completely open.
- Press the rocker switch to close until the sunroof is completely closed.
- Touch the one-touch function and check if the sunroof is in the end position for "optimal noise level". If not, then repeat the process.

The end positions of the sunroof are now stored in the control unit again.

Information

Sun blind motor

The end positions of the sun blind are deleted from the control unit when the battery is disconnected and connected.

The sliding roof must be closed fully in order to standardize the roll-up sun blind motor.

- Switch on ignition.
- Press the rocker switch to open until the roll-up sun blind is completely open.
- Press the rocker switch to close until the roll-up sun blind is completely closed.
- Touch the one-touch function and check whether the roll-up sun blind moves to its end position. If not, then repeat the process.

The end positions of the roll-up sun blind are now stored in the control unit again.

Information

6452 Power windows

The end positions of the power windows are deleted from the control unit when the battery is disconnected and connected.

Perform the following procedure for all power windows:

- Close the doors.
- Actuate rocker switch and fully close window once.
- Actuate rocker switch once more to close.

The upper end position of the window is stored.

- Actuate rocker switch and fully open window once.
- Actuate rocker switch once more to open.

The lower end position of the window is stored.

Information

9025 Instrument cluster

Clock

The time is deleted when the power supply is disconnected.

- Select "Time" under "Vehicle", "Settings", "Date & Time" in the on-board computer menu.
- Tick Select GPS Time .
- The evaluation of the GPS time from PCM is used as the time.

Trip counter

- The trip meter is set to 0 when the power supply is disconnected.

Information

Airbag control module

If the battery is disconnected for less than 100 seconds when the ignition is switched on, a CAN time fault, which makes diagnosis of the airbag control unit impossible, may be stored in the airbag control unit.

- Removing the ignition key erases the fault.

Information

On-board computer

Disconnection of the vehicle battery deletes the memories for average speed and average consumption. As a result, the displayed range on remaining fuel can be markedly different or even 0. The outside temperature display loses its memory effect. In other words, the indicated outside temperature can be too high due to the heat radiated when the vehicle is hot.

Test drive after disconnecting battery

Information

Depending on the vehicle equipment fitted, all these work steps are carried out during the test drive.

Read out the fault memories of all control units after the test drive.

- If there is a fault present, check to see if the fault was caused by an undervoltage.
- If faults were caused by an undervoltage (or CAN timeout error), erase the fault memory, perform another test drive and read out the fault memory.
- If faults were not caused by an undervoltage, correct the faults in accordance with GFF (Guided Fault Finding).

WM 2X00IN WORK INSTRUCTIONS AFTER DISCONNECTING THE BATTERY (EXCEPT CARRERA "EDITION", CARRERA CABRIOLET "EDITION", CARRERA 4 "EDITION", TARGA 4, TARGA 4S, TARGA 4 GTS, CARR. 4 CABRIO, CARR. 4S CABRIO, TURBO CABRIO, CARR. 4 GTS CABRIO, CARRERA 4 CABRIOLET "EDITION") > EFFECTS OF OVERVOLTAGE ON ELECTRICAL AND ELECTRONIC SYSTEMS DURING WELDING WORK AND THE PRECAUTIONS TO BE TAKEN

NOTE: Incorrect handling of control units

- *Risk of damage to the generator and electronic control units*

→ Disconnect and cover both battery terminals before starting welding work on the vehicle → Removing Battery

→ Disconnect the airbag triggering unit from the vehicle electrical system by pulling off the connector

before starting welding work → Removing triggering unit for airbag .

→ Secure the ground strap as close as possible to the welding area during electric welding.

→ When you have finished, first install the airbag triggering unit, then connect the battery → Installing triggering unit for airbag → Installing Battery → 270619 REMOVING AND INSTALLING BATTERY .

WM 9X00IN BASIC INSTRUCTIONS AND PROCEDURE FOR CONTROL UNIT PROGRAMMING USING THE PIWIS TESTER (EXCEPT CARRERA "EDITION", CARRERA CABRIOLET "EDITION", CARRERA 4 "EDITION", CARRERA 4 CABRIOLET "EDITION") > TOOLS

Designation	Type	Number	Description	
battery charger HFL 65	Workshop equipment	WE 1353		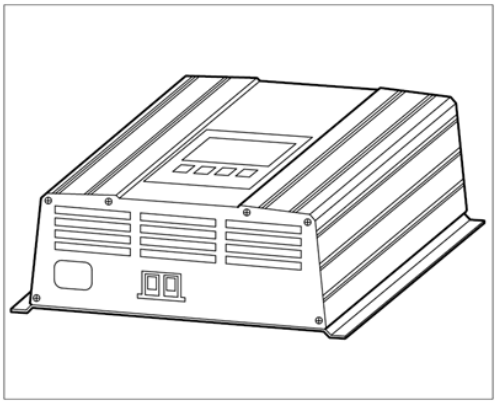
PIWIS Tester II	Special tool	9818		

WM 9X00IN BASIC INSTRUCTIONS AND PROCEDURE FOR CONTROL UNIT PROGRAMMING USING THE PIWIS TESTER (EXCEPT CARRERA "EDITION", CARRERA CABRIOLET "EDITION", CARRERA 4 "EDITION", CARRERA 4 CABRIOLET "EDITION") > BASIC INFORMATION AND INSTRUCTIONS FOR CONTROL UNIT PROGRAMMING > BASIC INFORMATION ON CONTROL UNIT PROGRAMMING

Information

There are basically two different ways of carrying out control unit programming:

- Using the "Programming" menu for the relevant control unit (e.g. for the DME and PDK control units).

  or

- Using the "Campaign" function in the Additional menu on the PIWIS Tester by entering a specific programming code.

The type of control unit programming to be used is described in the relevant Service Information or in the relevant Technical Information.

WM 9X00IN BASIC INSTRUCTIONS AND PROCEDURE FOR CONTROL UNIT PROGRAMMING USING THE PIWIS TESTER (EXCEPT CARRERA "EDITION", CARRERA CABRIOLET "EDITION", CARRERA 4 "EDITION", CARRERA 4 CABRIOLET "EDITION") > BASIC INFORMATION AND INSTRUCTIONS FOR CONTROL UNIT PROGRAMMING > BASIC INSTRUCTIONS FOR CONTROL UNIT PROGRAMMING

NOTE: Fault entry in the fault memory and control unit programming aborted due to undervoltage.

- *Increased current draw during diagnosis or control unit programming can cause a drop in voltage, which can result in one or more fault entries and the abnormal termination of the programming process.*

→ Before commencing work, connect a suitable battery charger with a current rating of at least 40 A to the jump-start terminals in the engine compartment.

NOTE: Control unit programming will be aborted if the WLAN connection is unstable.

- *An unstable WLAN connection can interrupt communication between PIWIS Tester II and the vehicle communication module (VCI). As a result, control unit programming may be aborted.*

→ During control unit programming, always connect PIWIS Tester II to the vehicle communication module (VCI) via the USB cable.

NOTE: Control unit programming will be aborted if the vehicle key is not recognized

- *If the vehicle key is not recognized in vehicles with Porsche Entry & Drive, programming cannot be started or will be interrupted.*

→ Switch on the ignition using the original vehicle key. To do this, replace the control panel in the ignition lock with the original vehicle key if necessary.

WM 9X00IN BASIC INSTRUCTIONS AND PROCEDURE FOR CONTROL UNIT PROGRAMMING USING THE PIWIS TESTER (EXCEPT CARRERA "EDITION", CARRERA CABRIOLET "EDITION", CARRERA 4 "EDITION", CARRERA 4 CABRIOLET "EDITION") > GENERAL PRELIMINARY WORK

1. Connect a battery charger with a current rating of **at least 40 A** (e.g. **battery charger HFL 65 WE 1353**).

   First connect the positive cable of the charger to the positive terminal of the battery and then connect the negative cable of the charger to the ground point for jump-lead starting → External power supply .

   Fig 1: Connecting Charger Positive Cable To Battery Positive Terminal

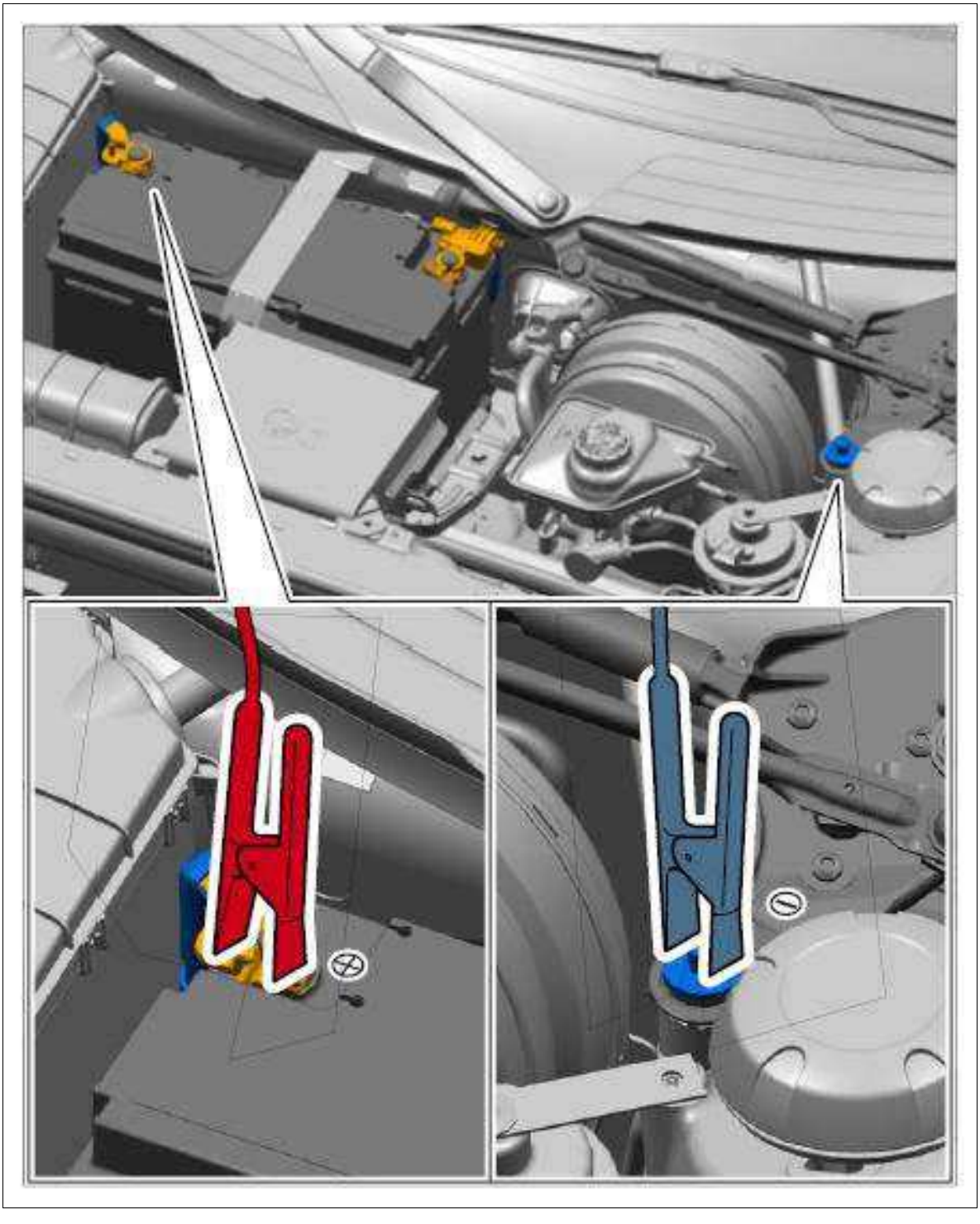

Courtesy of PORSCHE CARS NORTH AMERICA, INC.

2. Switch on the battery charger.

3. Switch on the ignition using the **original driver's key** .

   On vehicles with "Porsche Entry & Drive", do this by replacing the control panel in the ignition lock with the original driver's key if necessary.

4. **PIWIS Tester II 9818** must be connected to the vehicle communication module (VCI) via the **USB cable** . Then, connect the communication module to the vehicle and switch on the PIWIS Tester.

WM 9X00IN BASIC INSTRUCTIONS AND PROCEDURE FOR CONTROL UNIT PROGRAMMING USING THE PIWIS TESTER (EXCEPT CARRERA "EDITION", CARRERA CABRIOLET "EDITION", CARRERA 4 "EDITION", CARRERA 4 CABRIOLET "EDITION") > BASIC PROCEDURE FOR CONTROL UNIT PROGRAMMING USING THE PIWIS TESTER > INFORMATION ON THE PROCEDURE FOR CONTROL UNIT PROGRAMMING

Information

There are basically two different ways of carrying out control unit programming using the PIWIS Tester:

- Using the "Programming" menu for the relevant control unit (e.g. for the DME and PDK control units) → Control unit programming using the "Programming" menu.

  or

- Using the "Campaign" function in the Additional menu on the PIWIS Tester by entering a specific programming code → Control unit programming using the "Campaign" function in the Additional menu on the PIWIS Tester.

The type of control unit programming to be used is described in the relevant Service Information or in the relevant Technical Information.

Control unit programming using the "Programming" menu

1. On the PIWIS Tester start screen, call up the → **'Diagnostics'** menu and select the relevant vehicle type.

   The diagnostic application is then started and the control unit selection screen is populated.

2. Select the control unit to be programmed in the control unit selection screen (→ **"Overview"** menu) and press [>>] to confirm your selection → see Fig 1 .

Fig 1: Screen Display - Control Unit Selection

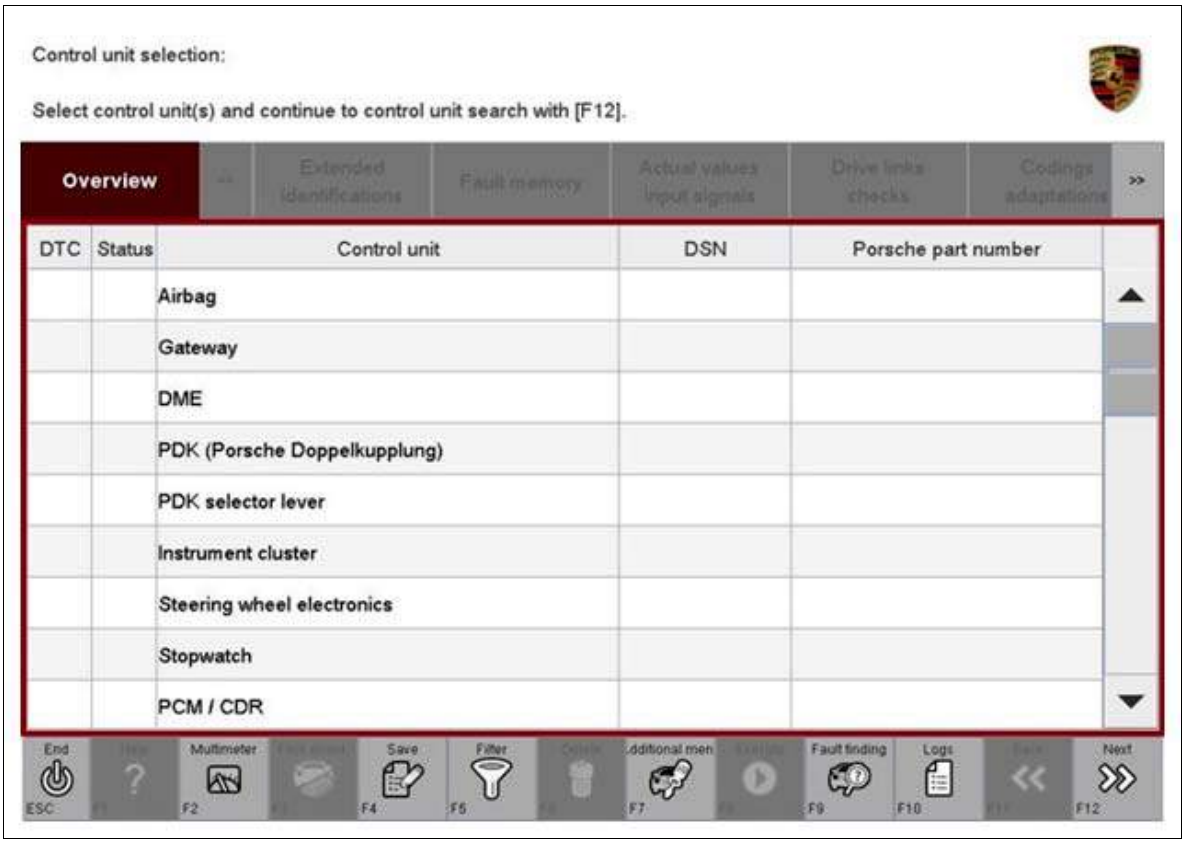

Courtesy of PORSCHE CARS NORTH AMERICA, INC.

3. When the question "Create Vehicle Analysis Log (VAL)?" appears, either press [F12] to create a VAL or press [F11] if you do not want to create a VAL.

4. Press [>>] to acknowledge the message that may appear informing you that campaigns for the vehicle are stored in the PIWIS information system.

5. Once the control unit to be programmed has been found, select the → **'Programming'** menu.

6. Select the → **'Automatic programming'** function and press [>>] to confirm your selection and start the guided programming sequence → see Fig 2 .

Fig 2: Screen Display - Automatic Programming

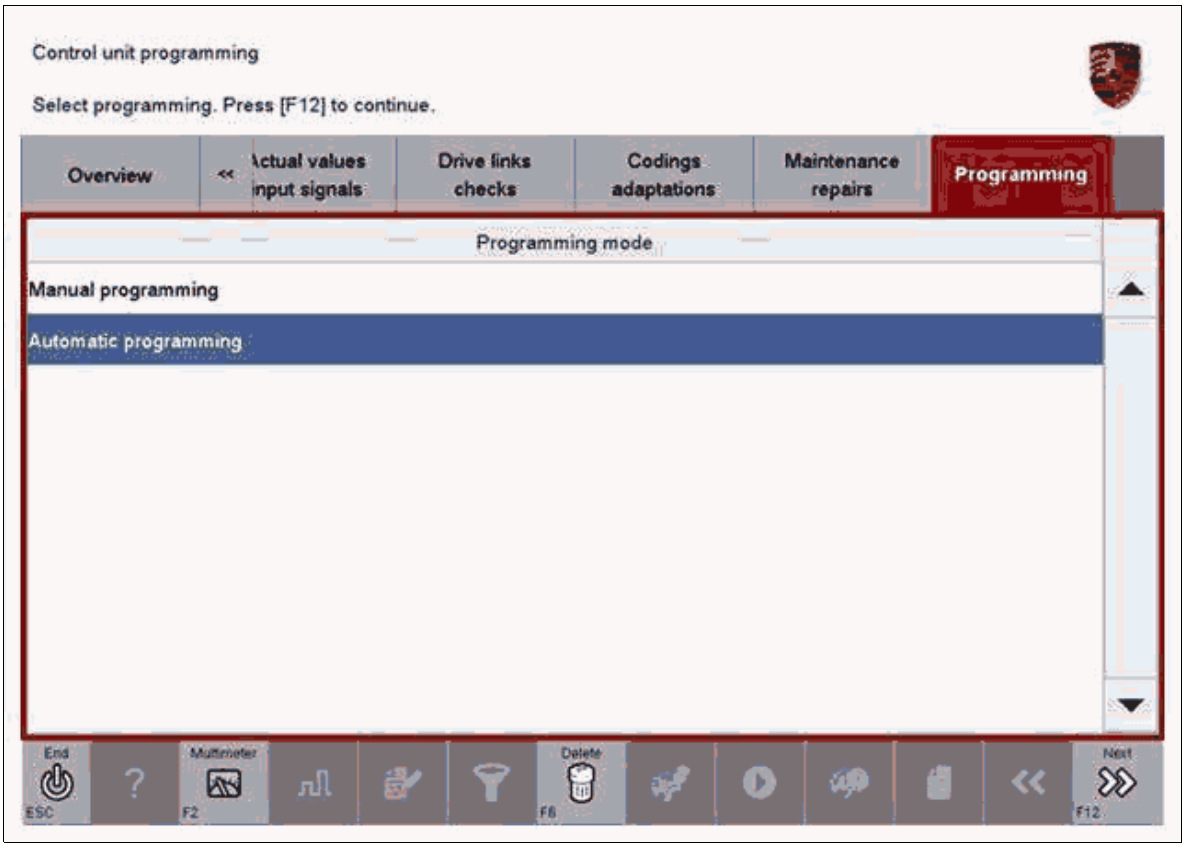

Courtesy of PORSCHE CARS NORTH AMERICA, INC.

7. Read and follow the **information and instructions on the PIWIS Tester** during the guided programming sequence. Then press [>>] to continue.

   During the programming sequence, the control unit is re-programmed and then re-coded automatically if necessary.

   Do not interrupt programming and coding.

   Once control unit programming - and coding if necessary - is complete, you will be prompted to switch the ignition off and then back on again after a specified waiting time.

   Information

   Once programming is completed successfully, the work described under → **"General subsequent work"** must always be carried out.

   If other specific subsequent work is required, this is described in the relevant Service Information or in the relevant Technical Information.

   Information

   1. If an error message is displayed during programming (e.g. "Campaign does not exist", "No suitable programming rules found" or "Vehicle data could not be read", etc.), please read and follow the appropriate instructions provided under → Troubleshooting.

   2. If programming is interrupted (e.g. due to a voltage drop or if communication is aborted, etc.) or if programming could not be carried out successfully (error message

"Programming unsuccessful"), must be repeated .

3. If coding is not carried out successfully during the guided programming sequence, the control unit must be re-coded again separately once the guided programming sequence is complete. To do this, select the relevant control unit in the control unit selection screen ("Overview" menu) and press [>>] to confirm your selection. Once the control unit has been found, select the "Codings/adaptations " menu and re-code the control unit using the 'Automatic coding' function.

WM 9X00IN BASIC INSTRUCTIONS AND PROCEDURE FOR CONTROL UNIT PROGRAMMING USING THE PIWIS TESTER (EXCEPT CARRERA "EDITION", CARRERA CABRIOLET "EDITION", CARRERA 4 "EDITION", CARRERA 4 CABRIOLET "EDITION") > BASIC PROCEDURE FOR CONTROL UNIT PROGRAMMING USING THE PIWIS TESTER > CONTROL UNIT PROGRAMMING USING THE "CAMPAIGN" FUNCTION IN THE ADDITIONAL MENU ON THE PIWIS TESTER

1. On the PIWIS Tester start screen, call up the → **'Diagnostics'** menu and select the relevant vehicle type.

   The diagnostic application is then started and the control unit selection screen is populated.

2. In the control unit selection screen ("Overview" menu), press [F7] to call up the → **'Additional menu'** (→ see Fig 1 .

   Fig 1: Screen Display - Control Unit Selection

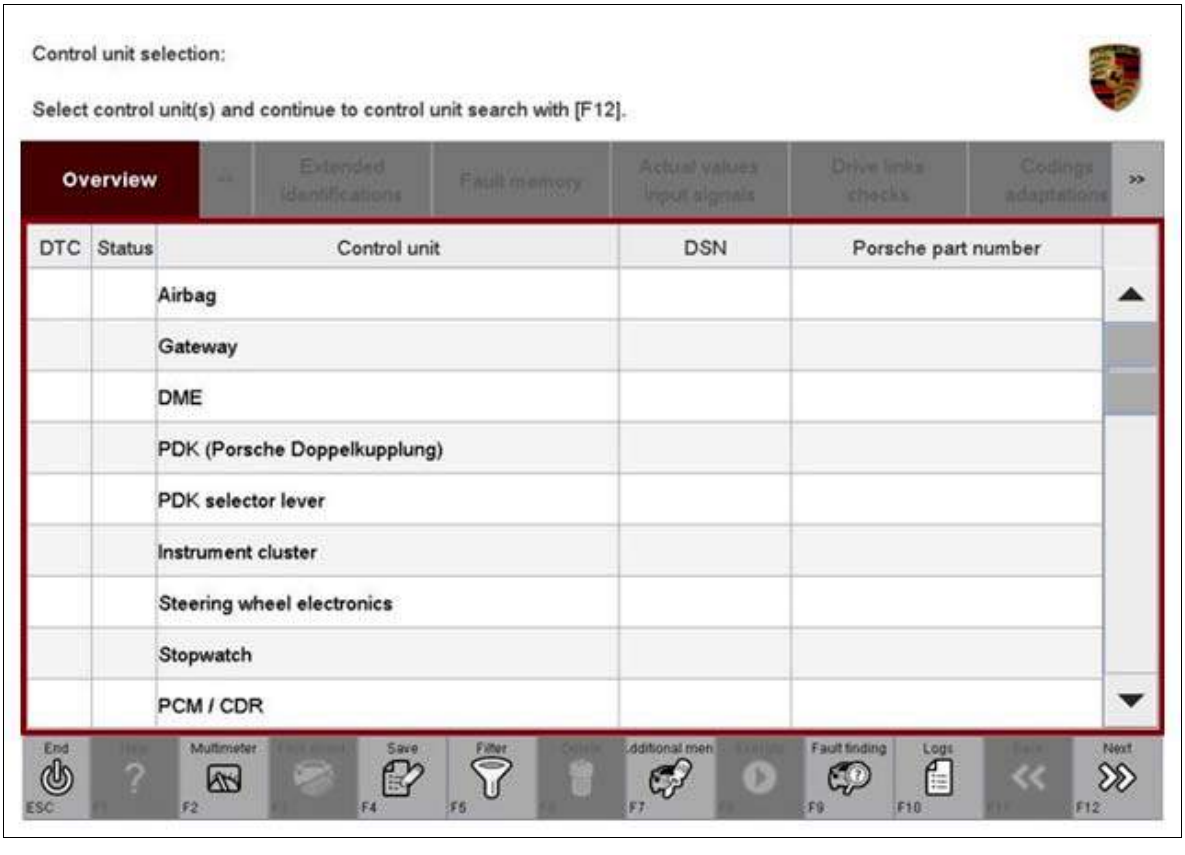

Courtesy of PORSCHE CARS NORTH AMERICA, INC.

3. When the question "Create Vehicle Analysis Log (VAL)?" appears, either press [>>] to create a VAL or press [F11] if you do not want to create a VAL.

4. Press [>>] to acknowledge the message that may appear informing you that campaigns for the vehicle are stored in the PIWIS information system.

5. Select the → **'Campaign'** function and press [>>] to confirm your selection → see Fig 2figure.

   You are then prompted to enter a programming code.

   Fig 2: Screen Display - Campaign

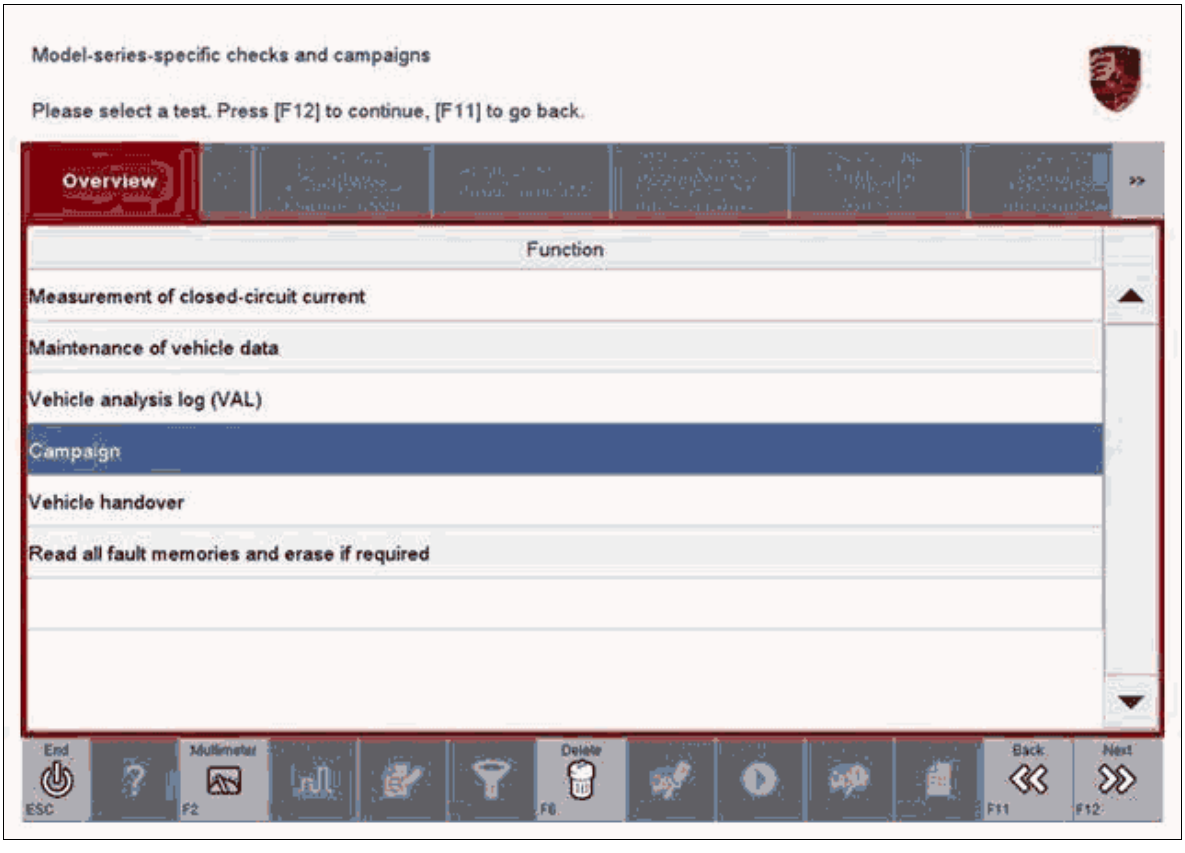

Courtesy of PORSCHE CARS NORTH AMERICA, INC.

6. To enter the programming code, click in the relevant text box so that the cursor starts to flash → see Fig 3 .

Fig 3: Screen Display - Programming Code Input Field

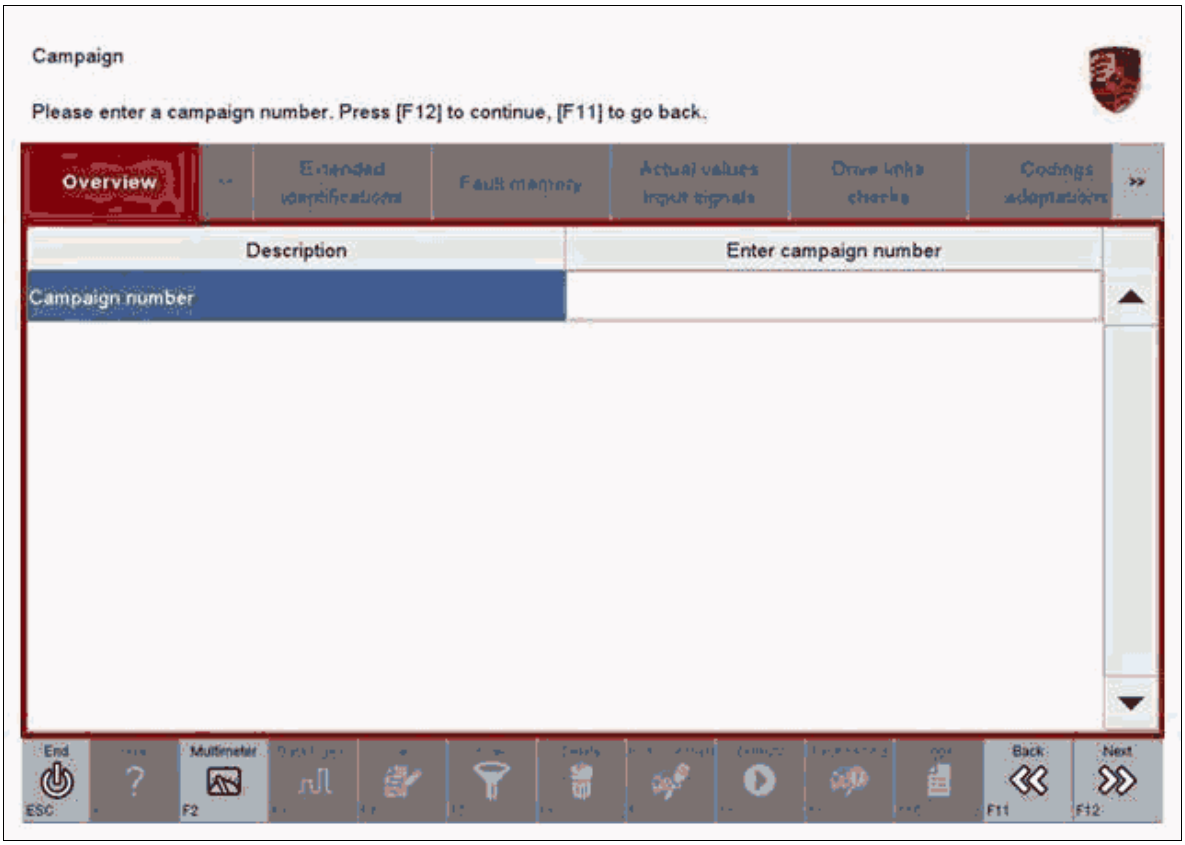

Courtesy of PORSCHE CARS NORTH AMERICA, INC.

7. Enter the **programming code** specified in the relevant description (Technical Information, Service Information) and press [Enter] to confirm your entry.

   The text box turns blue.

8. Press [>>] to start the guided programming sequence.

   Read and follow the **information and instructions on the PIWIS Tester** during the guided programming sequence. Then press [>>] to continue.

   During the programming sequence, the control unit is re-programmed and then re-coded automatically if necessary.

   Do not interrupt programming and coding.

   Once control unit programming - and coding if necessary - is complete, you will be prompted to switch the ignition off and then back on again after a specified waiting time.

   Information

   Once programming is completed successfully, the work described under → **"General subsequent work"** must always be carried out.

   If other specific subsequent work is required, this is described in the relevant Service Information or in the relevant Technical Information.

   Information

1. If an error message is displayed during programming (e.g. "Campaign does not exist", "No suitable programming rules found" or "Vehicle data could not be read", etc.), please read and follow the appropriate instructions provided under → Troubleshooting.

2. If programming is interrupted (e.g. due to a voltage drop or if communication is aborted, etc.) or if programming could not be carried out successfully (error message "Programming unsuccessful"), programming must be repeated by entering the programming code again (Additional menu > Campaign >> Enter campaign number). It is not possible to program the control units manually.

3. If coding is not carried out successfully during the guided programming sequence, the control unit must be re-coded again separately once the guided programming sequence is complete. To do this, select the relevant control unit in the control unit selection screen ("Overview" menu) and press [>>] to confirm your selection. Once the control unit has been found, select the "Codings/adaptations " menu and re-code the control unit using the 'Automatic coding' function.

WM 9X00IN BASIC INSTRUCTIONS AND PROCEDURE FOR CONTROL UNIT PROGRAMMING USING THE PIWIS TESTER (EXCEPT CARRERA "EDITION", CARRERA CABRIOLET "EDITION", CARRERA 4 "EDITION", CARRERA 4 CABRIOLET "EDITION") > GENERAL SUBSEQUENT WORK

1. Read out and erase all fault memories.

1.1. In the control unit selection screen (→ **'Overview'** menu), press [F7] to call up the → **'Additional menu'** (→ see Fig 1 .

Fig 1: Screen Display - Control Unit Selection

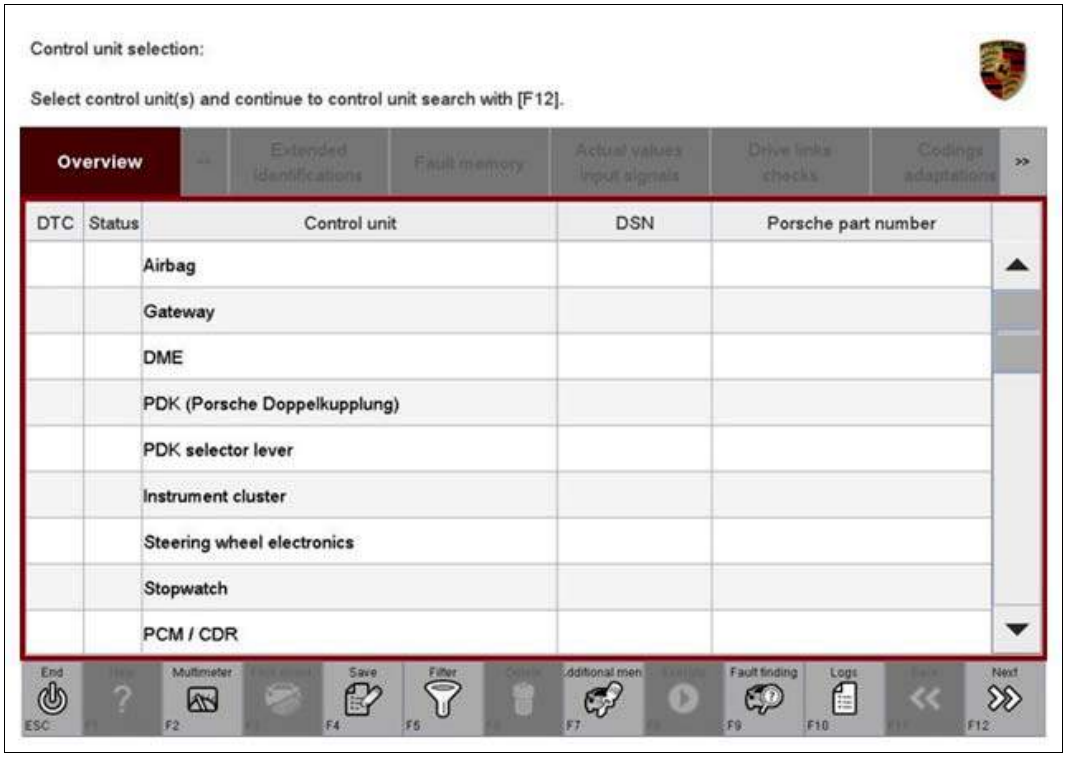

Courtesy of PORSCHE CARS NORTH AMERICA, INC.

1.2. Select the function → **'Read all fault memories and erase if required'** and

press [>>] to confirm → see Fig 2 .

The fault memories of the control units are read out.

Fig 2: Screen Display - Erasing Fault Memories

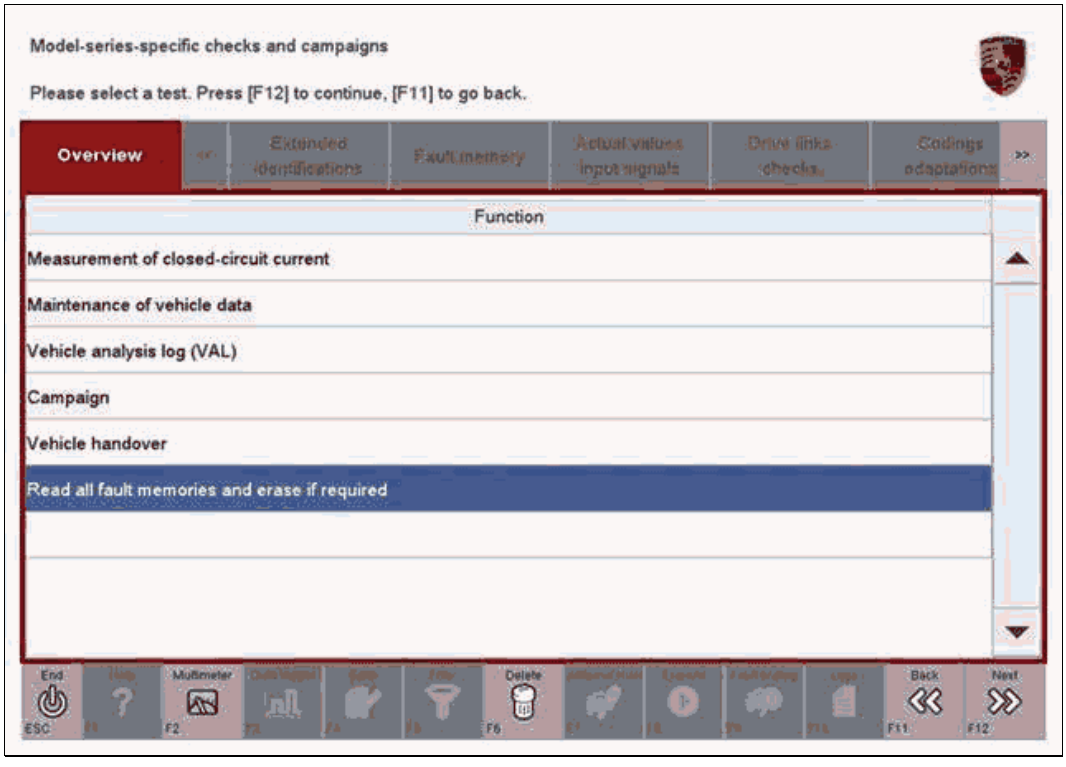

Courtesy of PORSCHE CARS NORTH AMERICA, INC.

1.3. Once you have read out the fault memories, delete the fault memory entries by pressing [F8].

1.4. Press [>>] ("Yes") in response to the question as to whether you really want to delete all fault memory entries.

The faults stored in the fault memories of the various control units are deleted.

Information

If there are still fault memory entries in individual control units, start the engine briefly and then switch it off again. Wait for approx. 10 seconds before switching the ignition on again and re-establish the connection between the PIWIS Tester and the vehicle. Then read out and erase the fault memories of the affected control units again separately.

If the control units are found to have other faults, which cannot be erased and are **not caused by control unit programming** , these faults must be found and corrected.

2. Switch off ignition.

3. Disconnect the PIWIS Tester from the vehicle.

4. Switch off and disconnect the battery charger.

5. On vehicles with Porsche Entry & Drive, replace the original driver's key in the ignition lock with the control panel again.

WM 9X00IN BASIC INSTRUCTIONS AND PROCEDURE FOR CONTROL UNIT PROGRAMMING USING THE PIWIS TESTER (EXCEPT CARRERA "EDITION", CARRERA CABRIOLET "EDITION", CARRERA 4 "EDITION", CARRERA 4 CABRIOLET "EDITION") > TROUBLESHOOTING

Information

This Service Information describes possible **causes and remedial action** for **error messages** that can occur both during control unit programming using the **'Campaign'** function and during control unit programming using the **'Automatic programming'** function.

Error message after starting programming	Possible causes	Remedial action
Specified campaign does not exist	• PIWIS Tester software is not up-to-date	• Update PIWIS Tester software to the software version specified in the Technical Information (or a higher software version). Then enter the programming code again and start programming.
	• Wrong vehicle type selected	• Close the diagnostic application. Select the correct vehicle type and restart the diagnostic application. Then enter the programming code again and start programming.
	• Incorrect programming code entered or programming code not entered correctly	• Enter the programming code specified in the Technical Information correctly.
No suitable programming rules found.Cause: **Part number of the control unit** is not in the programming rules.	• Campaign must not be carried out on the vehicle or campaign was already carried out.	• Check vehicle assignment to the campaign in **PIWIS > Vehicle information** .
	• Replacement control unit with up-to-date software version was installed	• Check Porsche part number of the relevant control unit in the → "Extended

	• Software version of the installed control unit is already up-to-date • Software version of the control unit is a version that is not intended for carrying out the campaign.	identification" menu. Information about the current Porsche part numbers and software versions of the affected control unit can be found in the relevant Service Information or in the relevant Technical Information.
No suitable programming rules found.Cause: **Current vehicle equipment** is not shown in the programming rules. Please check vehicle order and change it if necessary.	• Campaign must not be carried out on the vehicle.	• Check vehicle assignment to the campaign in **PIWIS** > **'Vehicle Information'** menu.
	• Vehicle order is wrong.	• Check vehicle order and correct it if necessary (PIWIS Tester > Additional menu >> Maintenance of vehicle data). Then enter the programming code again and start programming.
Vehicle data could not be read	• Ignition not switched on	• Switch on ignition and close and restart the diagnostic application. Then enter the programming code again and start programming.

WM 9X00IN MEASUREMENT OF CLOSED-CIRCUIT CURRENT (EXCEPT CARRERA "EDITION", CARRERA CABRIOLET "EDITION", CARRERA 4 "EDITION", CARRERA 4 CABRIOLET "EDITION" > TOOLS

Designation	Type	Number	Description
Multimeter	Commercially available tool	155	PORSCHE siehe Handbuch Werkstattausrüstung Voir le Manuel Equipement d´atelier Refer to the Workshop Equipment manual Vease Manual de Equipamiento de Taller Vedere il Manuale dell´attrezzatura d´officina ワークショップ・イクイップメント・マニュアルを参照

WM 9X00IN MEASUREMENT OF CLOSED-CIRCUIT CURRENT (EXCEPT CARRERA "EDITION", CARRERA CABRIOLET "EDITION", CARRERA 4 "EDITION", CARRERA 4 CABRIOLET "EDITION" > TOOL

Closed-circuit current should be measured using the digital multimeter with a long integration time (to filter out voltage peaks).

Fig 1: Identifying Digital Multimeter

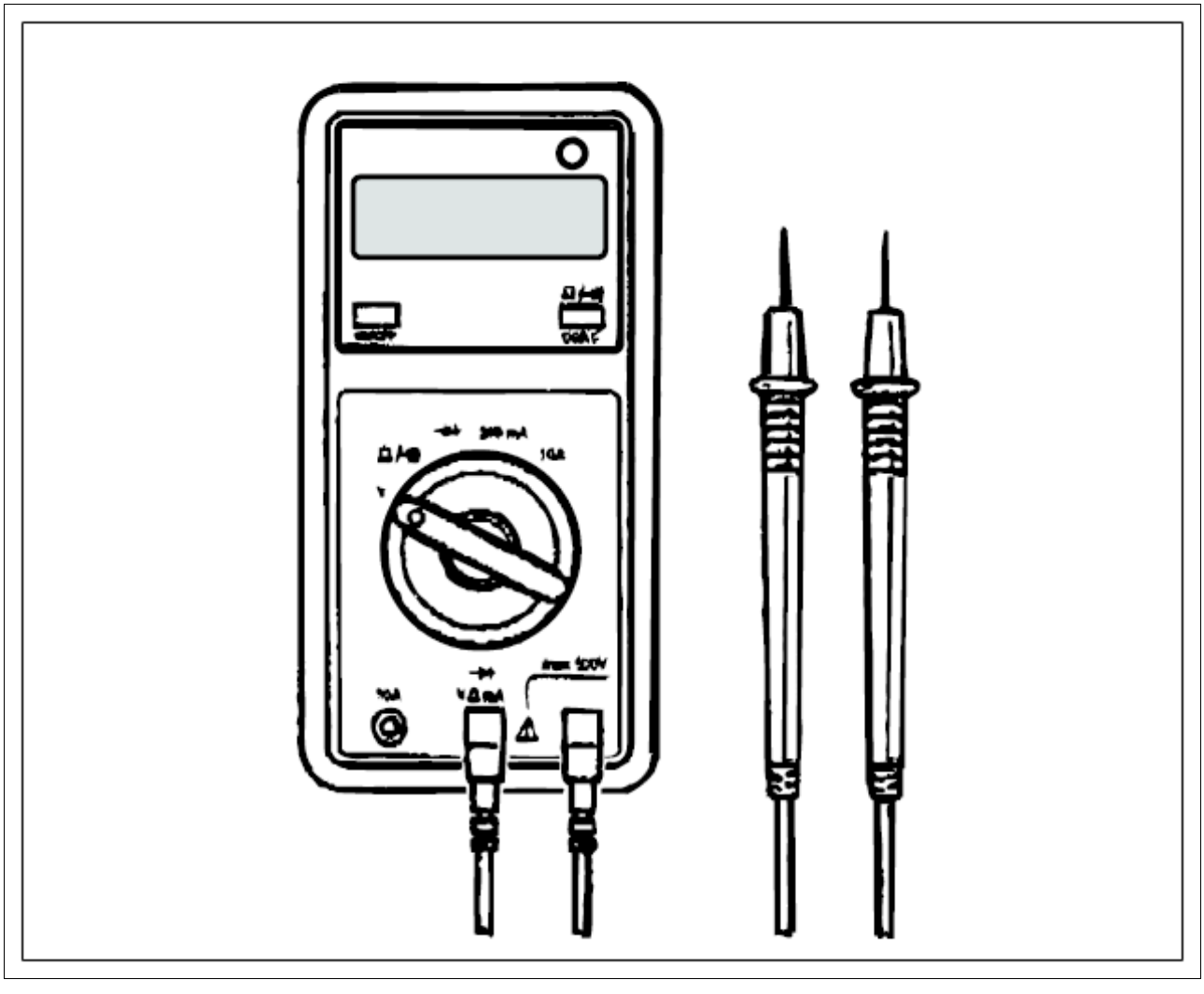

Courtesy of PORSCHE CARS NORTH AMERICA, INC.

Item	Special tool designation	Explanation
-1-	**Multimeter 155**	

WM 9X00IN MEASUREMENT OF CLOSED-CIRCUIT CURRENT (EXCEPT CARRERA "EDITION", CARRERA CABRIOLET "EDITION", CARRERA 4 "EDITION", CARRERA 4 CABRIOLET "EDITION" > TOOL > PREPARATORY WORK ON THE VEHICLE

Information

- Before measuring the closed-circuit current, determine the vehicle equipment (I-numbers) and establish the expected closed-circuit current with the aid of the attached table.
- The closed-circuit current must only be measured on a cold vehicle (engine & brakes).

    1. Close all doors and lids on the vehicle.
    2. Read out the fault memory and delete the displayed faults if necessary.
    3. Disconnect the battery.

WM 9X00IN MEASUREMENT OF CLOSED-CIRCUIT CURRENT (EXCEPT CARRERA "EDITION", CARRERA CABRIOLET "EDITION", CARRERA 4 "EDITION", CARRERA 4 CABRIOLET "EDITION" > TOOL > CONNECTING THE MEASURING DEVICE

1. Use crocodile clips to connect the measuring device to the battery ground terminal and body ground point.
2. Remove ground strap from the body and secure against contact with the body. The entire vehicle current now flows through the ammeter.
3. Place an additional short circuit bridge over the input socket of the measuring device to prevent damage to the measuring device.

WM 9X00IN MEASUREMENT OF CLOSED-CIRCUIT CURRENT (EXCEPT CARRERA "EDITION", CARRERA CABRIOLET "EDITION", CARRERA 4 "EDITION", CARRERA 4 CABRIOLET "EDITION" > TOOL > MEASUREMENT

Read off the measured values after the waiting period specified in the table.

1. Switch on ignition for 10 seconds.
2. Switch off ignition.
3. Open the driver's door and close the rotary latch with a screwdriver while the door is open.
4. Lock the vehicle using the central-locking remote control and switch off interior surveillance (press the button on the remote control twice in one second).
5. Remove short circuit bridge.
6. Read off the closed-circuit current.

    Information

    1. If the value of the closed-circuit current is higher than the value determined in the table, the cause must be established systematically.
    2. Recommended troubleshooting procedure: With the measuring device connected, remove the fuses of terminal 30 and the relays successively. Observe the values displayed on the measuring device when removing the fuses and relays in order to detect a reduction in current.
    3. The measured values can vary by approx. 20%.
    4. The values listed in the table depend on the condition of the battery, the room

temperature, the engine temperature and therefore should only be regarded as guidelines.

Reading off the measuring range:

Read off the measuring range only after at least 35 minutes have passed since locking the vehicle.

From	to	mA
35 min.	Until battery is empty	max. 30

Control unit	Equipment	Closed-circuit current in mA
All-wheel drive		0.1
Alarm siren	Standard	0.89
Battery sensor	Standard	0.23
Front BCM, front-end electronics	Standard	2.3
Rear BCM, rear-end electronics	Standard	4.72
Roof console	Standard	0.11
DME	Standard	0.05
Steering column adjustment		0.06
Electric steering		0.25
ELV, electronic steering column lock	Standard	0
Gateway	Standard	0.2
Generator	Standard	0.13
Main fuse box	Standard	0
Interior surveillance		2
Front climate control panel	Standard	0.05
Instrument cluster	Standard	0.16
Fuel pump control unit	Standard	0
Steering column module	Standard	0.22
Light switch	Standard	0
Engine fan	Standard	0
PASM		0.05
Parking brake	Standard	0.22

PCM		0.32
PDCC		0
PDK		0.05
PSM	Standard	0.11
TPM (Tire Pressure Monitoring)		0.05
Rain sensor		0.05
Sliding roof		0.05
Seat, FL		0.13
Seat, FR		0.19
Heated seats		0
Stopwatch		0.05
Tank leakage diagnosis	Standard	0.05
Door, FL		0.2
Door, FR		0.15
TV tuner		0.15
Convertible top		0.21
Amplifier		0.08
Wiper	Standard	0.08
Ignition lock	Standard	0.06
Maximum closed-circuit current		**30 mA**
Calculated closed-circuit current		13.72 mA

7. Connect battery and read out fault memory. Delete any faults if necessary. → 2X00IN WORK INSTRUCTIONS AFTER DISCONNECTING THE BATTERY

WM 9X00IN TECHNICAL VALUES (EXCEPT CARRERA "EDITION", CARRERA CABRIOLET "EDITION", CARRERA 4 "EDITION", CARRERA 4 CABRIOLET "EDITION") > TECHNICAL VALUES

Location	Description	Type	Basic value	Tolerance 1	Tolerance 2
Fastening screws for instrument cluster		Tightening torque	3.2 Nm (2 ftlb.)		

Fastening nut for horn	Tightening torque	10 Nm (7.5 ftlb.)	
Fastening screws for stopwatch	Tightening torque	1.7 Nm (1.5 ftlb)	
Fastening nut securing antenna amplifier to A-pillar	Tightening torque	6 Nm (4.5 ftlb.)	
Threaded joint for display and control panel	Tightening torque	5.6 Nm (4 ftlb.)	
"CD player" radio	Tightening torque	5.6 Nm (4 ftlb.)	
Threaded connection for midrange loudspeaker in door subframe	Tightening torque	3 Nm (2 ftlb.)	
Threaded connection for woofer in door sub-frame	Tightening torque	3 Nm (2 ftlb.)	
Fastening screw securing tweeter to dashboard	Tightening torque	2.5 Nm (2 ftlb.)	
Fastening screw securing center speaker to dashboard	Tightening torque	3.2 Nm (2 ftlb.)	
Fastening screw securing subwoofer to dashboard bracket	Tightening torque	3.5 Nm (2.5 ftlb.)	
Threaded connection for rear speaker	Tightening torque	2 Nm (1.5 ftlb.)	
Fastening nut for loudspeaker amplifier	Tightening torque	6 Nm (4.5 ftlb.)	
Fastening screw for SDARS antenna	Tightening torque	2 Nm (1.5 ftlb.)	+0.5 Nm (+0.5 ftlb.)

Fastening nut securing TV tuner to body		Tightening torque	2.5 Nm (2 ftlb.)
Fastening screw for windscreen-washer reservoir		Tightening torque	10 Nm (7.5 ftlb.)
Fastening nut on wiper arm		Tightening torque	25 Nm (19 ftlb.)
Wiper arm on passenger's side		Adjustment value	10 mm
Wiper arm on driver's side		Adjustment value	10 mm
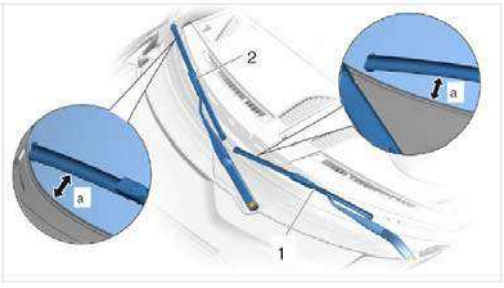 Adjusting wiper arm			
Wiper arm for rear window washer to wiper motor		Tightening torque	19 Nm (14 ftlb.)
Fastening screw securing wiper linkage to body	Screw on spring strut dome	Tightening torque	23 Nm (17 ftlb.)
Fastening screw securing wiper linkage to body	Screws on bulkhead	Tightening torque	11 Nm (8 ftlb.)
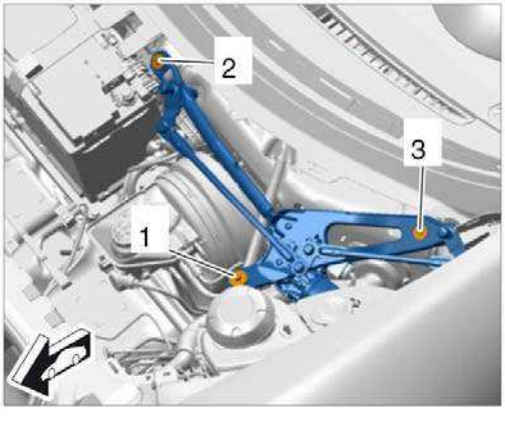 Threaded connection for wiper linkage			
Fastening screw securing wiper motor for rear window washer		Tightening torque	3 Nm (2 ftlb.)

to body				
Fastening nuts securing wiper motor for rear window washer to body		Tightening torque	8 Nm (6 ftlb.)	
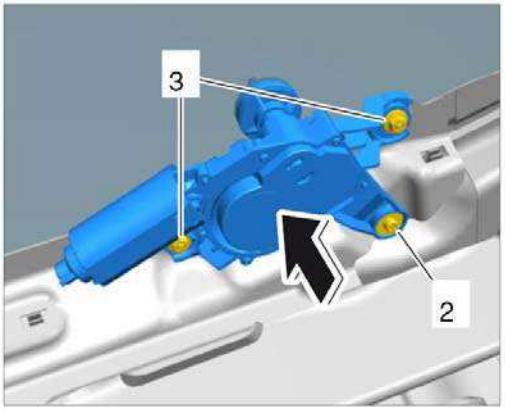 Installing wiper motor				
Spray range, front windscreen washer system (S1)	from front lid to spray jet intersection point	Adjustment value	480 mm	+/-10 mm
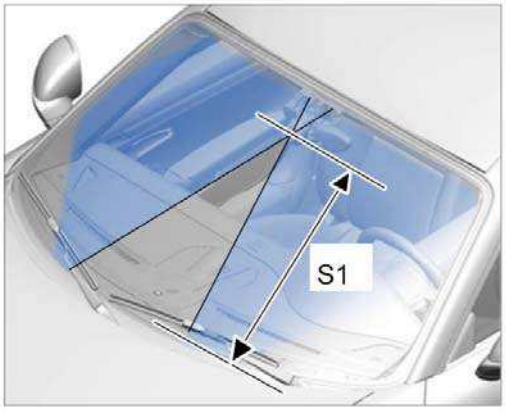 Spray pattern, front windscreen washer system				
Fastening nuts securing headlight mounting to body		Tightening torque	8 Nm (6 ftlb.)	
Gap dimension -x- brake light switch	Gap between sensor and counter plate	Adjustment value	1.5 mm	+/-0.5 mm

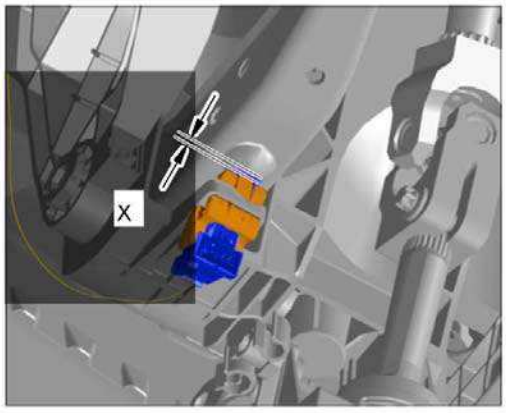

Adjusting brake light switch

Clamping screw for steering-column switch		Tightening torque	6 Nm (4.5 ftlb.)		
Fastening screw for tail light		Tightening torque	5.8 Nm (4.5 ftlb.)	+10 %	-15 %
Fastening screw for tail light		Tightening torque	5.8 Nm (4.5 ftlb.)		
Reflector cover fastening screw		Tightening torque	4 Nm	+0.5 Nm	
Threaded joint for angle sensor on holder		Tightening torque	3.4 Nm (2.5 ftlb.)		
Threaded joint for connecting link (angle sensor) on wishbone		Tightening torque	4.5 Nm (3.5 ftlb.)		
Additional brake light to lower part of rear spoiler	M5 collar nut, self-locking - replace	Tightening torque	3 Nm (2 ftlb.)		
Auxiliary headlight to front apron	Internal Torx screw, 6 x 18	Tightening torque	2.5 Nm (1.5 ftlb.)		
Fastening screw for Kessy antenna in center console		Tightening torque	3 Nm (2 ftlb.)		
Threaded joint for alarm siren holder on compressor holder		Tightening torque	2.8 Nm (2 ftlb.)		

Threaded joint for alarm horn holder on spring strut dome		Tightening torque	9.7 Nm (7.5 ftlb.)	+10 %	-20 %
Ground points to longitudinal member in front luggage compartment		Tightening torque	8.5 Nm (6.5 ftlb.)		
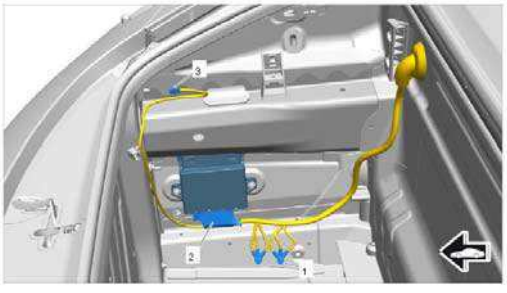 Main wire harness in luggage compartment, inner right					
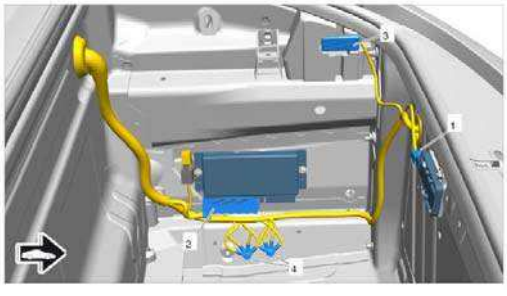 Main wire harness in luggage compartment, inner left					
Fastening nuts on cable feed-through element in firewall		Tightening torque	5.5 Nm (4.5 ftlb.)		
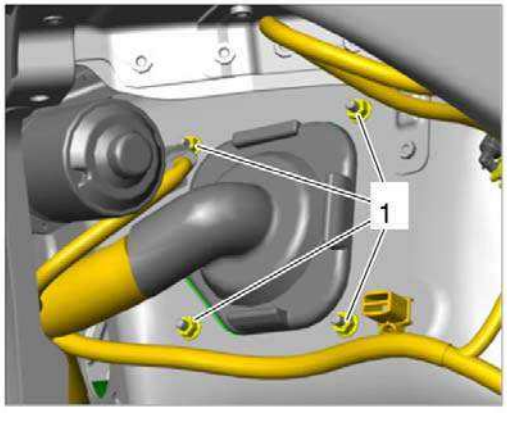 Feed-through element in firewall					
Fastening nut securing cable shoe on B+ line for battery to power distributor	M8	Tightening torque	12 Nm (9 ftlb.)		

Fastening nut securing fuse box to positive terminal		Tightening torque	9.7 Nm (7.5 ftlb.)
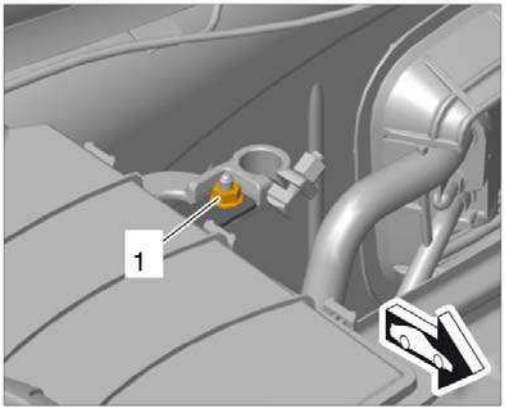 Loosening fuse box			
Fastening screw securing holder for engine compartment wire harness to body		Tightening torque	9.7 Nm (7.5 ftlb.)
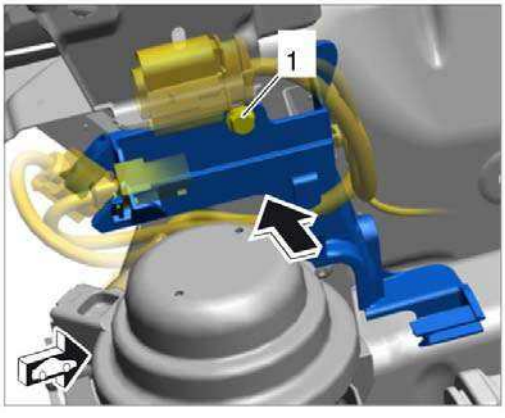 Securing holder			
Fastening nuts securing ground strap to body	M6	Tightening torque	8.5 Nm (6.5 ftlb.)

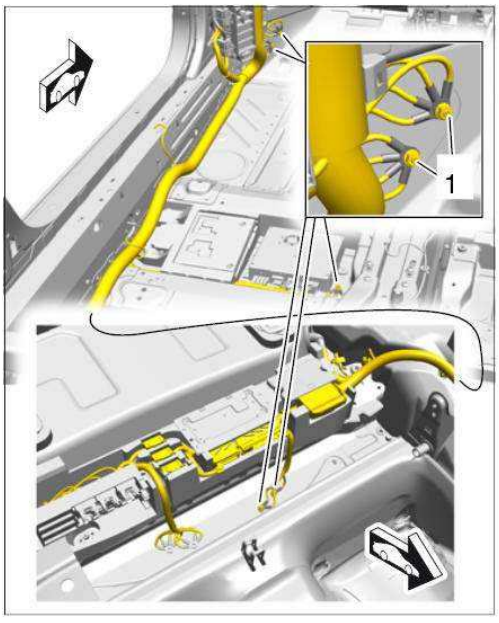

Ground straps for main wire harness, left

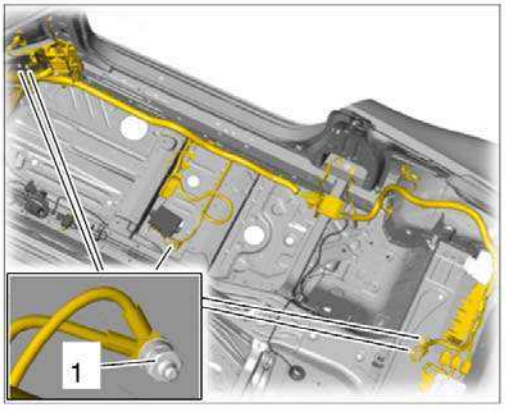

Ground straps for main wire harness, right

Fastening nut securing fuse box at the right to body	M6	Tightening torque	9.7 Nm (7.5 ftlb.)
Fastening nut securing power supply line to power distributor	M6	Tightening torque	12 Nm (9 ftlb.)
Fastening nut securing fuse box at the left to body	M6	Tightening torque	9.7 Nm (7.5 ftlb.)
Fastening nuts securing bracket for control unit for front-end electronics to body	M6	Tightening torque	3.5 Nm (2.5 ftlb.)

Fastening screw securing front ground strap to roof	M5	Tightening torque	2.5 Nm (2 ftlb.)	
Cable duct to cylinder head	M8	Tightening torque	23 Nm (17 ftlb.)	
Electric line for term. 50 to starter	M6	Tightening torque	6.5 Nm (5 ftlb.)	
Ground straps to valve cover	M6	Tightening torque	10 Nm (7.5 ftlb.)	
Threaded connection for midrange loudspeaker		Tightening torque	3 Nm (2 ftlb.)	
Ground strap to body		Tightening torque	15 Nm (11 ftlb.)	
Fastening screw securing ground strap to engine, M8		Tightening torque	23 Nm (17 ftlb.)	
Fastening screw securing ground strap to body, M8		Tightening torque	23 Nm (17 ftlb.)	
Fastening nuts (M8) for battery lines in power distributor		Tightening torque	12 Nm (9 ftlb.)	+/-1 Nm (+/-0.5 ftlb.)
Fastening nuts (M5) for fuse element in power distributor		Tightening torque	5 Nm (3.5 ftlb.)	+/-1 Nm (+/-0.5 ftlb.)
Fastening nuts (M8) for cutoff relay		Tightening torque	12 Nm (9 ftlb.)	+/-1 Nm (+/- 0.5 ftlb.)
Fastening nut for cover on connection point for rear ABS		Tightening torque	2.5 Nm (2 ftlb.)	

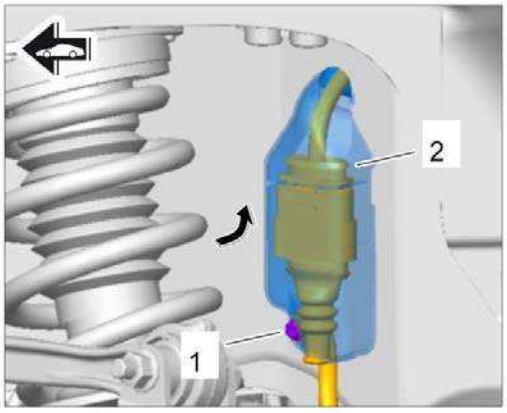 Securing cover					
Threaded joint for alarm siren holder on compressor holder		Tightening torque	2.8 Nm (2 ftlb.)		

WM 9X00IN TECHNICAL VALUES (EXCEPT CARRERA "EDITION", CARRERA CABRIOLET "EDITION", CARRERA 4 "EDITION", CARRERA 4 CABRIOLET "EDITION") > TECHNICAL VALUES > 90 - INSTRUMENTS

Location	Description	Type	Basic value	Tolerance 1	Tolerance 2
Fastening screws for instrument cluster		Tightening torque	3.2 Nm (2 ftlb.)		
Fastening nut for horn		Tightening torque	10 Nm (7.5 ftlb.)		
Fastening screws for stopwatch		Tightening torque	1.7 Nm (1.5 ftlb)		

WM 9X00IN TECHNICAL VALUES (EXCEPT CARRERA "EDITION", CARRERA CABRIOLET "EDITION", CARRERA 4 "EDITION", CARRERA 4 CABRIOLET "EDITION") > TECHNICAL VALUES > 91 - RADIO, ON-BOARD COMPUTER, PARKASSIST

Location	Description	Type	Basic value	Tolerance 1	Tolerance 2
Fastening nut securing antenna amplifier to A-pillar		Tightening torque	6 Nm (4.5 ftlb.)		
Threaded joint for display and		Tightening torque	5.6 Nm (4 ftlb.)		

control panel					
"CD player" radio		Tightening torque	5.6 Nm (4 ftlb.)		
Threaded connection for mid-range loudspeaker in door sub-frame		Tightening torque	3 Nm (2 ftlb.)		
Threaded connection for woofer in door sub-frame		Tightening torque	3 Nm (2 ftlb.)		
Fastening screw securing tweeter to dashboard		Tightening torque	2.5 Nm (2 ftlb.)		
Fastening screw securing center speaker to dashboard		Tightening torque	3.2 Nm (2 ftlb.)		
Fastening screw securing subwoofer to dashboard bracket		Tightening torque	3.5 Nm (2.5 ftlb.)		
Threaded connection for rear speaker		Tightening torque	2 Nm (1.5 ftlb.)		
Fastening nut for loudspeaker amplifier		Tightening torque	6 Nm (4.5 ftlb.)		
Fastening screw for SDARS antenna		Tightening torque	2 Nm (1.5 ftlb.)	+0.5 Nm (+0.5 ftlb.)	
Fastening nut securing TV tuner to body		Tightening torque	2.5 Nm (2 ftlb.)		

WM 9X00IN TECHNICAL VALUES (EXCEPT CARRERA "EDITION", CARRERA CABRIOLET "EDITION", CARRERA 4 "EDITION", CARRERA 4 CABRIOLET "EDITION") > TECHNICAL VALUES > 92 - WINDSCREEN WIPER AND WASHER SYSTEM

Location	Description	Type	Basic value	Tolerance 1	Tolerance 2
Fastening screw		Tightening	10 Nm (7.5		

for windscreen-washer reservoir		torque	ftlb.)
Fastening nut on wiper arm		Tightening torque	25 Nm (19 ftlb.)
Wiper arm on passenger's side		Adjustment value	10 mm
Wiper arm on driver's side		Adjustment value	10 mm
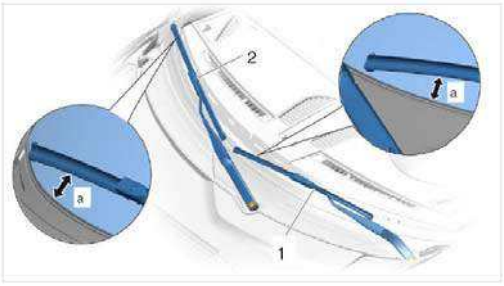 Adjusting wiper arm			
Wiper arm for rear window washer to wiper motor		Tightening torque	19 Nm (14 ftlb.)
Fastening screw securing wiper linkage to body	Screw on spring strut dome	Tightening torque	23 Nm (17 ftlb.)
Fastening screw securing wiper linkage to body	Screws on bulkhead	Tightening torque	11 Nm (8 ftlb.)
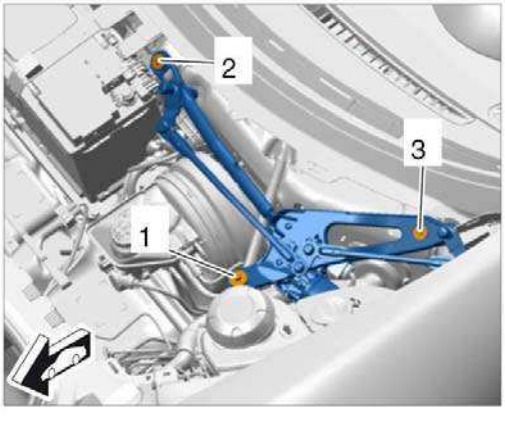 Threaded connection for wiper linkage			
Fastening screw securing wiper motor for rear window washer to body		Tightening torque	3 Nm (2 ftlb.)
Fastening nuts securing wiper motor for rear		Tightening torque	8 Nm (6 ftlb.)

window washer to body					

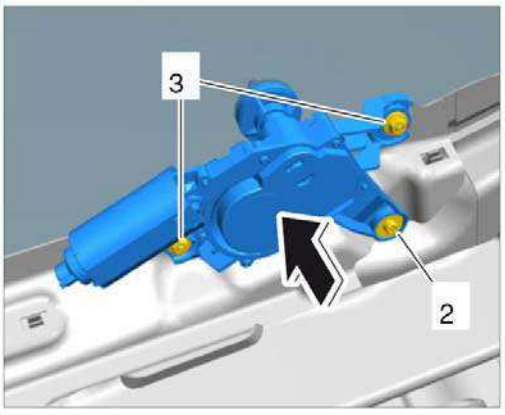

Installing wiper motor

WM 9X00IN TECHNICAL VALUES (EXCEPT CARRERA "EDITION", CARRERA CABRIOLET "EDITION", CARRERA 4 "EDITION", CARRERA 4 CABRIOLET "EDITION") > TECHNICAL VALUES > 93 - SPRAY NOZZLES FOR WINDSCREEN WASHER SYSTEM

Location	Description	Type	Basic value	Tolerance 1	Tolerance 2
Spray range, front windscreen washer system (S1)	from front lid to spray jet intersection point	Adjustment value	480 mm	+/-10 mm	

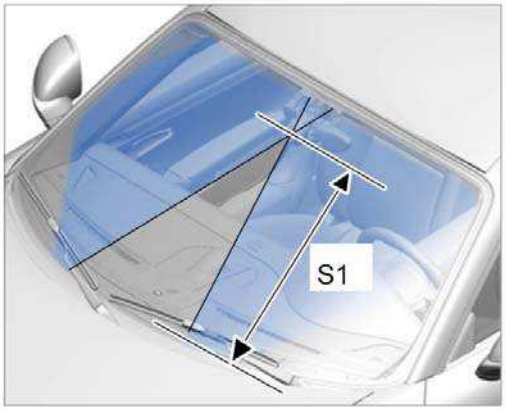

Spray pattern, front windscreen washer system

WM 9X00IN TECHNICAL VALUES (EXCEPT CARRERA "EDITION", CARRERA CABRIOLET "EDITION", CARRERA 4 "EDITION", CARRERA 4 CABRIOLET "EDITION") > TECHNICAL VALUES > 94 - LIGHTS, LAMPS, SWITCHES - EXTERIOR

Location	Description	Type	Basic value	Tolerance 1	Tolerance 2
Fastening nuts securing headlight mounting to body		Tightening torque	8 Nm (6 ftlb.)		

Gap dimension -x- brake light switch	Gap between sensor and counter plate	Adjustment value	1.5 mm	+/-0.5 mm	
	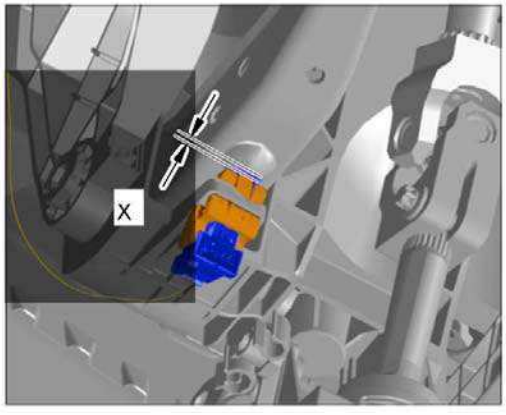 Adjusting brake light switch				
Clamping screw for steering-column switch		Tightening torque	6 Nm (4.5 ftlb.)		
Fastening screw for tail light		Tightening torque	5.8 Nm (4.5 ftlb.)	+10 %	-15 %
Fastening screw for tail light		Tightening torque	5.8 Nm (4.5 ftlb.)		
Reflector cover fastening screw		Tightening torque	4 Nm	+0.5 Nm	
Threaded joint for angle sensor on holder		Tightening torque	3.4 Nm (2.5 ftlb.)		
Threaded joint for connecting link (angle sensor) on wishbone		Tightening torque	4.5 Nm (3.5 ftlb.)		
Additional brake light to lower part of rear spoiler	M5 collar nut, self-locking - replace	Tightening torque	3 Nm (2 ftlb.)		
Auxiliary headlight to front apron	Internal Torx screw, 6 x 18	Tightening torque	2.5 Nm (1.5 ftlb.)		

WM 9X00IN TECHNICAL VALUES (EXCEPT CARRERA "EDITION", CARRERA CABRIOLET "EDITION", CARRERA 4 "EDITION", CARRERA 4 CABRIOLET "EDITION") > TECHNICAL VALUES > 96 - LIGHTS, LAMPS, SWITCHES - INTERIOR, ANTI-THEFT PROTECTION

Location	Description	Type	Basic value	Tolerance 1	Tolerance 2
Fastening screw for Kessy antenna in center console		Tightening torque	3 Nm (2 ftlb.)		
Threaded joint for alarm siren holder on compressor holder		Tightening torque	2.8 Nm (2 ftlb.)		
Threaded joint for alarm horn holder on spring strut dome		Tightening torque	9.7 Nm (7.5 ftlb.)	+10 %	-20 %

WM 9X00IN TECHNICAL VALUES (EXCEPT CARRERA "EDITION", CARRERA CABRIOLET "EDITION", CARRERA 4 "EDITION", CARRERA 4 CABRIOLET "EDITION") > TECHNICAL VALUES > 97 - LINES

Location	Description	Type	Basic value	Tolerance 1	Tolerance 2
Ground points to longitudinal member in front luggage compartment		Tightening torque	8.5 Nm (6.5 ftlb.)		
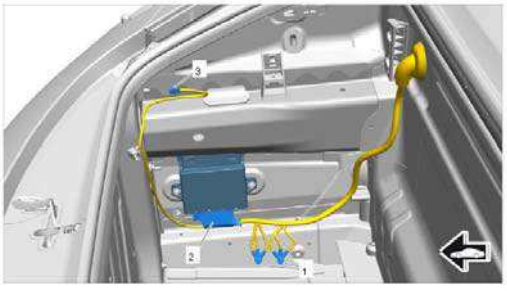 Main wire harness in luggage compartment, inner right					
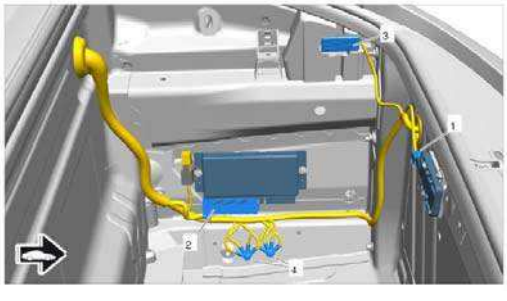 Main wire harness in luggage compartment, inner left					
Fastening nuts on cable feed-through element in firewall		Tightening torque	5.5 Nm (4.5 ftlb.)		

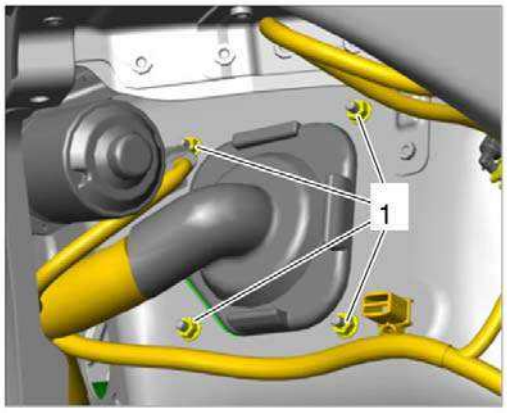 Feed-through element in firewall			
Fastening nut securing cable shoe on B+ line for battery to power distributor	M8	Tightening torque	12 Nm (9 ftlb.)
Fastening nut securing fuse box to positive terminal		Tightening torque	9.7 Nm (7.5 ftlb.)
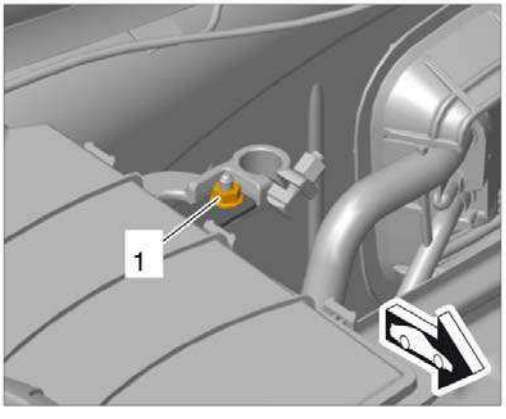 Loosening fuse box			
Fastening screw securing holder for engine compartment wire harness to body		Tightening torque	9.7 Nm (7.5 ftlb.)

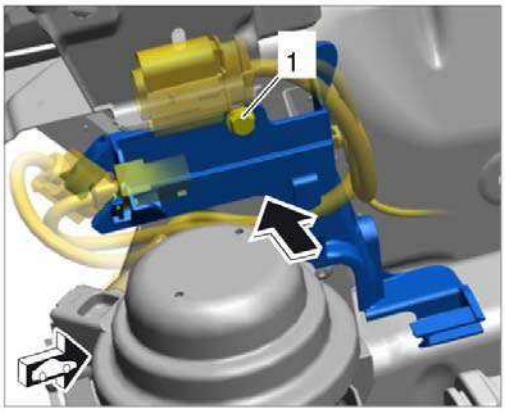

Securing holder

Fastening nuts securing ground strap to body	M6	Tightening torque	8.5 Nm (6.5 ftlb.)

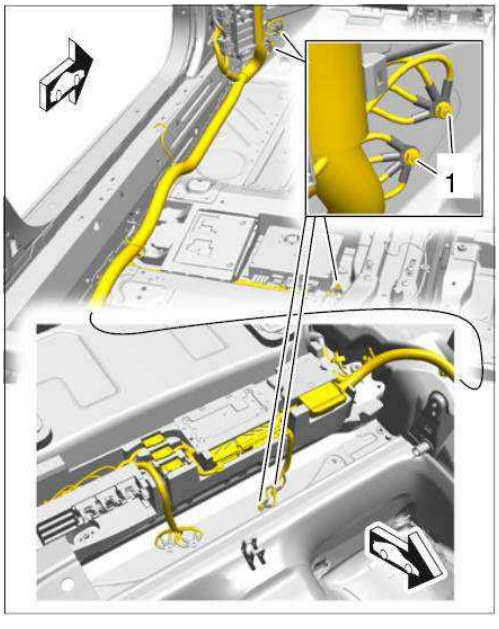

Ground straps for main wire harness, left

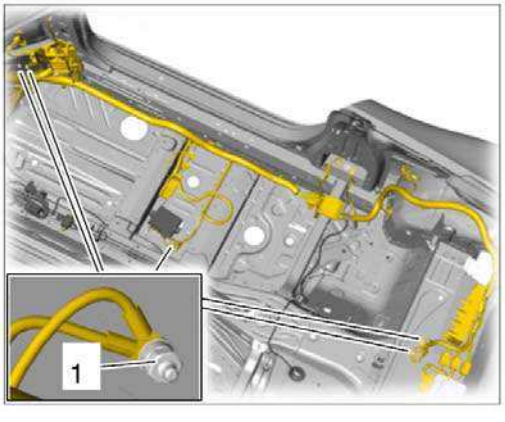

Ground straps for main wire harness, right

Fastening nut securing fuse box at the right to body	M6	Tightening torque	9.7 Nm (7.5 ftlb.)

Fastening nut securing power supply line to power distributor	M6	Tightening torque	12 Nm (9 ftlb.)	
Fastening nut securing fuse box at the left to body	M6	Tightening torque	9.7 Nm (7.5 ftlb.)	
Fastening nuts securing bracket for control unit for front-end electronics to body	M6	Tightening torque	3.5 Nm (2.5 ftlb.)	
Fastening screw securing front ground strap to roof	M5	Tightening torque	2.5 Nm (2 ftlb.)	
Cable duct to cylinder head	M8	Tightening torque	23 Nm (17 ftlb.)	
Electric line for term. 50 to starter	M6	Tightening torque	6.5 Nm (5 ftlb.)	
Ground straps to valve cover	M6	Tightening torque	10 Nm (7.5 ftlb.)	
Threaded connection for mid-range loudspeaker		Tightening torque	3 Nm (2 ftlb.)	
Ground strap to body		Tightening torque	15 Nm (11 ftlb.)	
Fastening screw securing ground strap to engine, M8		Tightening torque	23 Nm (17 ftlb.)	
Fastening screw securing ground strap to body, M8		Tightening torque	23 Nm (17 ftlb.)	
Fastening nuts (M8) for battery lines in power distributor		Tightening torque	12 Nm (9 ftlb.)	+/-1 Nm (+/-0.5 ftlb.)
Fastening nuts (M5) for fuse element in power		Tightening torque	5 Nm (3.5 ftlb.)	+/-1 Nm (+/-0.5 ftlb.)

distributor			
Fastening nuts (M8) for cutoff relay	Tightening torque	12 Nm (9 ftlb.)	+/-1 Nm (+/- 0.5 ftlb.)
Fastening nut for cover on connection point for rear ABS	Tightening torque	2.5 Nm (2 ftlb.)	
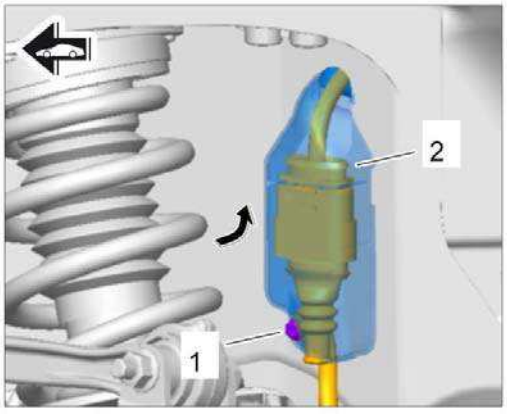 Securing cover			
Threaded joint for alarm siren holder on compressor holder	Tightening torque	2.8 Nm (2 ftlb.)	

Service Manual: 24 - FUEL SYSTEM - ELECTRONIC IGNITION -- 911 CARRERA (991)

WM 2400IN OVERVIEW OF VACUUM SYSTEM, LINE ROUTING, CHANGE-OVER VALVES (EXCEPT CARRERA "EDITION", CARRERA CABRIOLET "EDITION", TURBO S, CARRERA 4 "EDITION", TURBO CABRIO, TURBO S CABRIO, CARRERA 4 CABRIOLET "EDITION", GT3, GT3 RS) > INFORMATION > POSITION OF CHANGE-OVER VALVES > INSTALLATION POSITION OF CHANGE-OVER VALVES IN THE VEHICLE

Fig 1: Overview Of Change-Over Valves

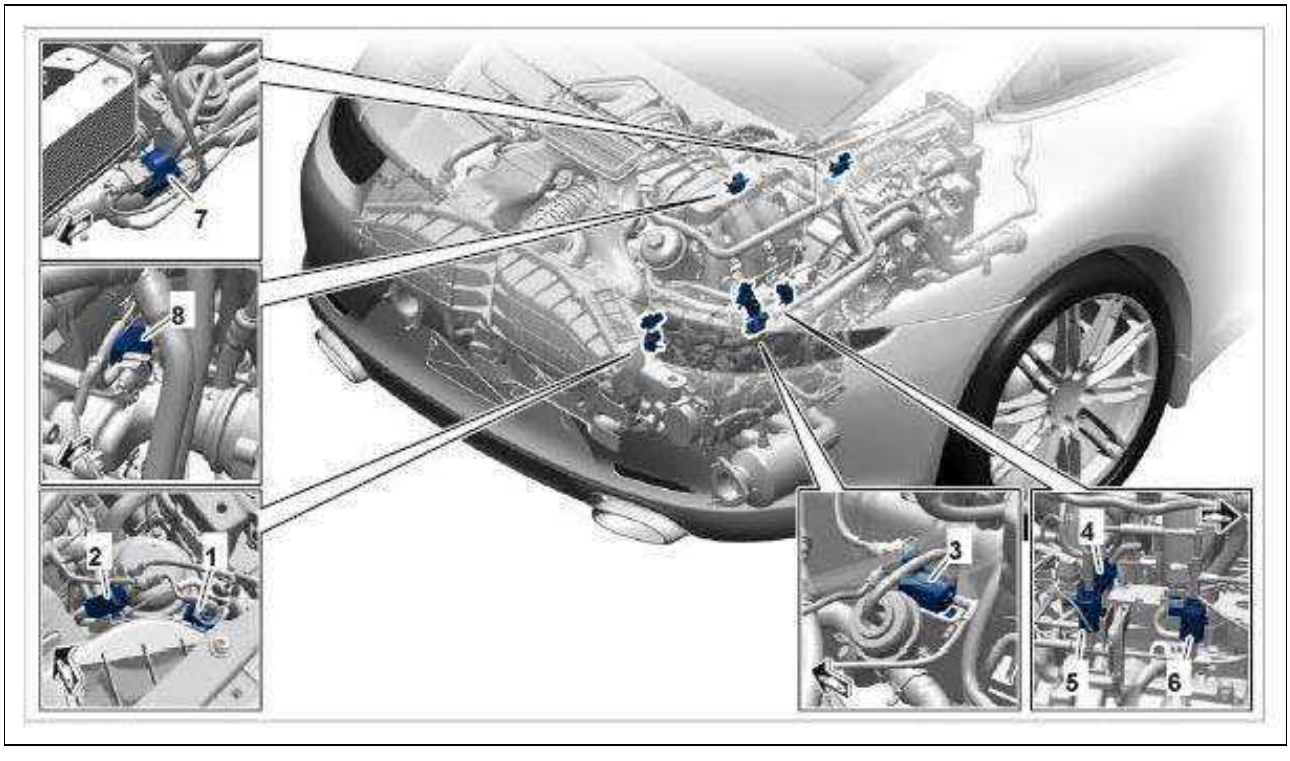

Courtesy of PORSCHE CARS NORTH AMERICA, INC.

Position	Part identifier	Change-over valve function	991 3.4 l	991 S 3.8 l	Comment
1	**2456**	Air cleaner flap	X	X	
2	**2644**	Acoustic simulator	X	X	
3	**1971**	Heater shut-off valve	X	X	
4	**2637**	Exhaust flaps	I-no. 176	X	Standard for 3.8-litre engine or sports exhaust system
5	**1969**	Coolant shut-off valve on engine bypass circuit	X	X	
6	**2456**	Tuning flap		X	

7	**3866**	Shut-off valve on heat exchanger for gear wheel set oil	X	X	
8	**3866**	Shut-off valve for clutch fluid heat exchanger	I-no. 250	I-no. 250	Only Porsche Doppelkupplung (PDK)
9 (not shown)	**2456**	Tuning flap		I-no. X51	Engine with Power Kit
10 (not shown)	**2456**	Tuning flap		I-no. X51	Engine with Power Kit

X = Standard equipment

View of change-over valve:

1. Fresh-air connection
2. Vacuum line for the actuator
3. Vacuum connection

Fig 2: Identifying Change-Over Valve Connections

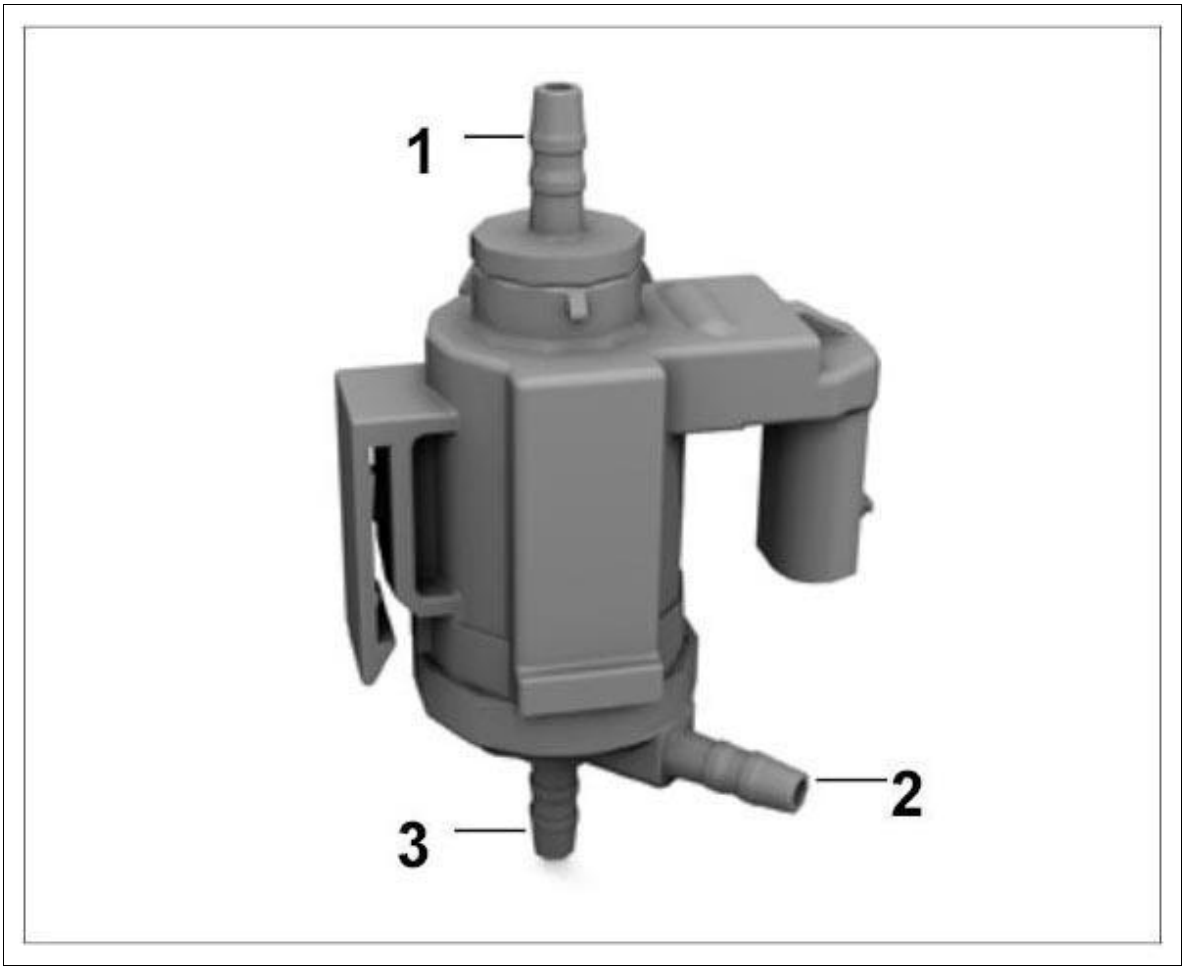

Courtesy of PORSCHE CARS NORTH AMERICA, INC.

1. **Installation position of change-over valve for air cleaner:** Press tab **-in direction of**

arrow- to unclip it.

1. Cable plug
2. Change-over valve for air cleaner flap
3. Clean-air line
4. Vacuum supply (L = 125 mm)
5. Vacuum line for air cleaner flap control box (L = 340 mm)

Fig 3: Locating Change-Over Valve For Air Cleaner Housing Flap

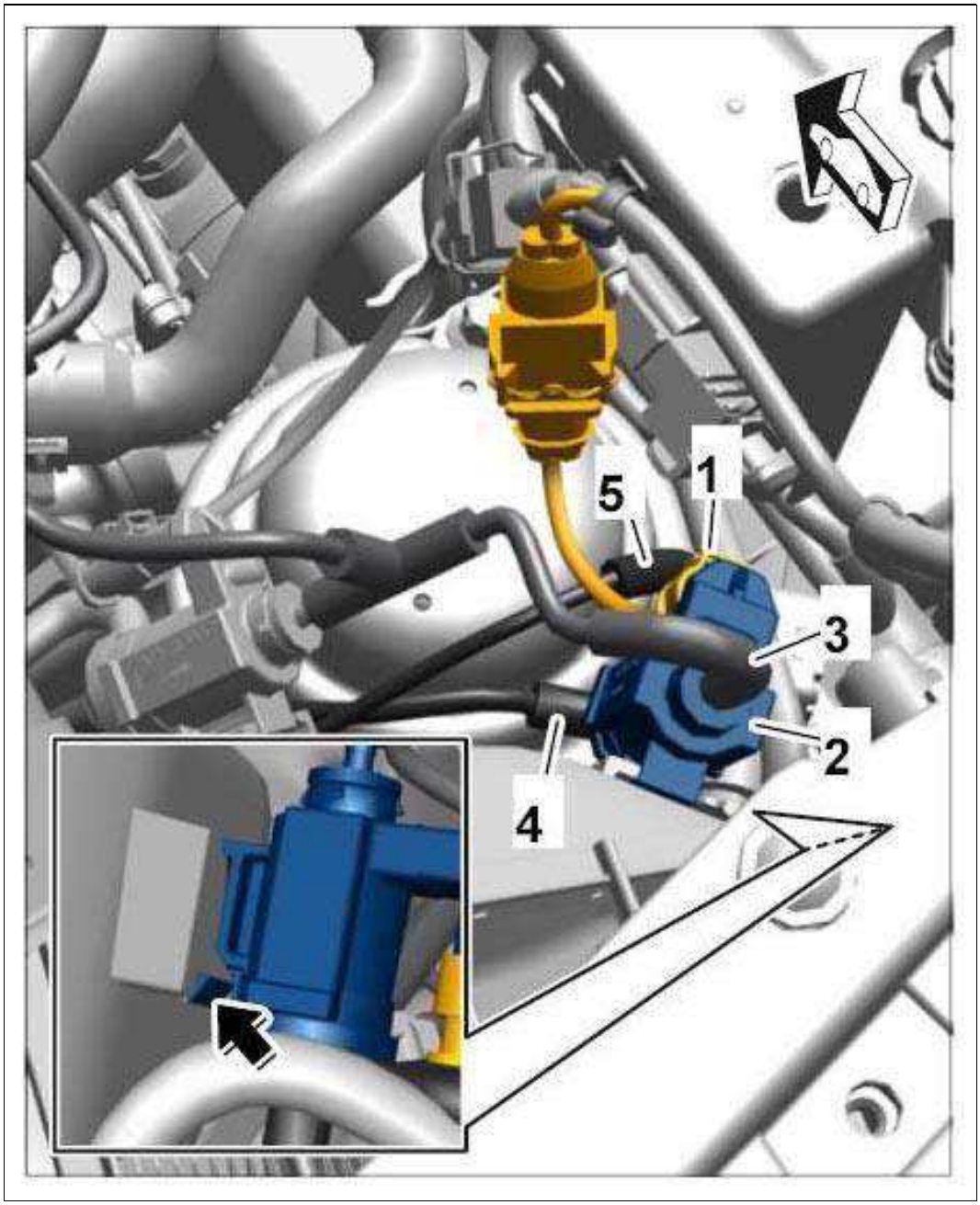

Courtesy of PORSCHE CARS NORTH AMERICA, INC.

2. **Change-over valve for acoustic simulator:** Press tab **-in direction of arrow-** to unclip it.

1. Electric plug connection
2. Change-over valve for acoustic simulator
3. Fresh-air line
4. Vacuum line (supply)
5. Vacuum line for acoustic simulator

Fig 4: Locating Change-Over Valve For Sound Symposer

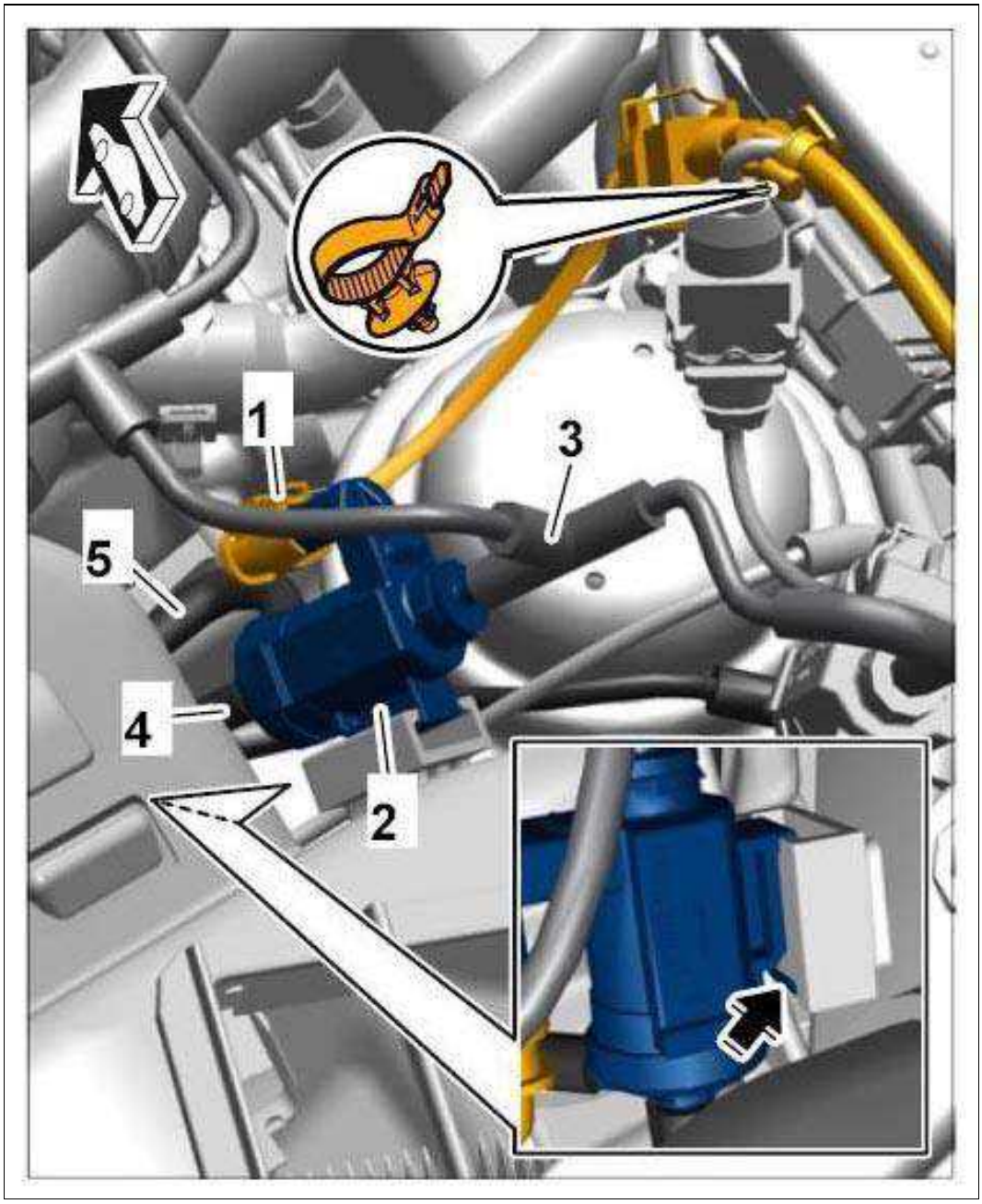

Courtesy of PORSCHE CARS NORTH AMERICA, INC.

3. **Change-over valve for heat exchanger shut-off valve:**

1. Electric plug connection

2. Change-over valve for heat exchanger shut-off valve

3. Fresh-air line

4. Vacuum line (supply)

5. Vacuum line for heat exchanger shut-off valve

Fig 5: Locating Change-Over Valve For Heat Exchanger

Courtesy of PORSCHE CARS NORTH AMERICA, INC.

4. **Change-over valve for exhaust flaps on 3.8-litre engine or sports exhaust system:**

1. Electric plug connection

2. Change-over valve for exhaust flaps

3. Fresh-air line

4. Vacuum line (supply)

5. Vacuum line for the exhaust flaps

Fig 6: Locating Change-Over Valve For Exhaust Flaps

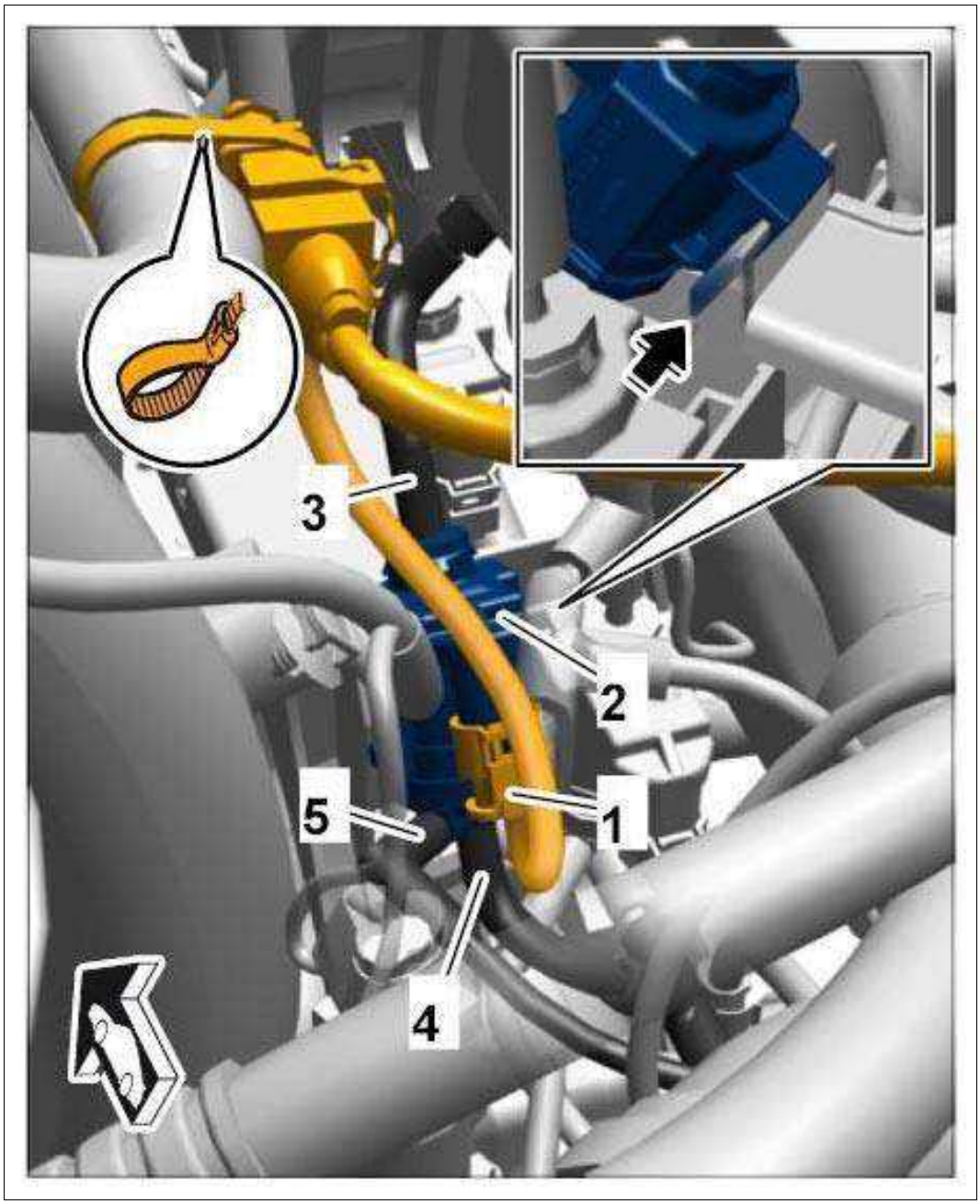

Courtesy of PORSCHE CARS NORTH AMERICA, INC.

5. **Change-over valve for shut-off valve for cooling system bypass circuit:**

1. Electric plug connection

2. Change-over valve for coolant shutoff valve for engine

3. Fresh-air line

4. Vacuum line (supply)

5. Vacuum line for coolant shutoff valve for engine

Fig 7: Locating Change-Over Valve For Coolant Shutoff Valve

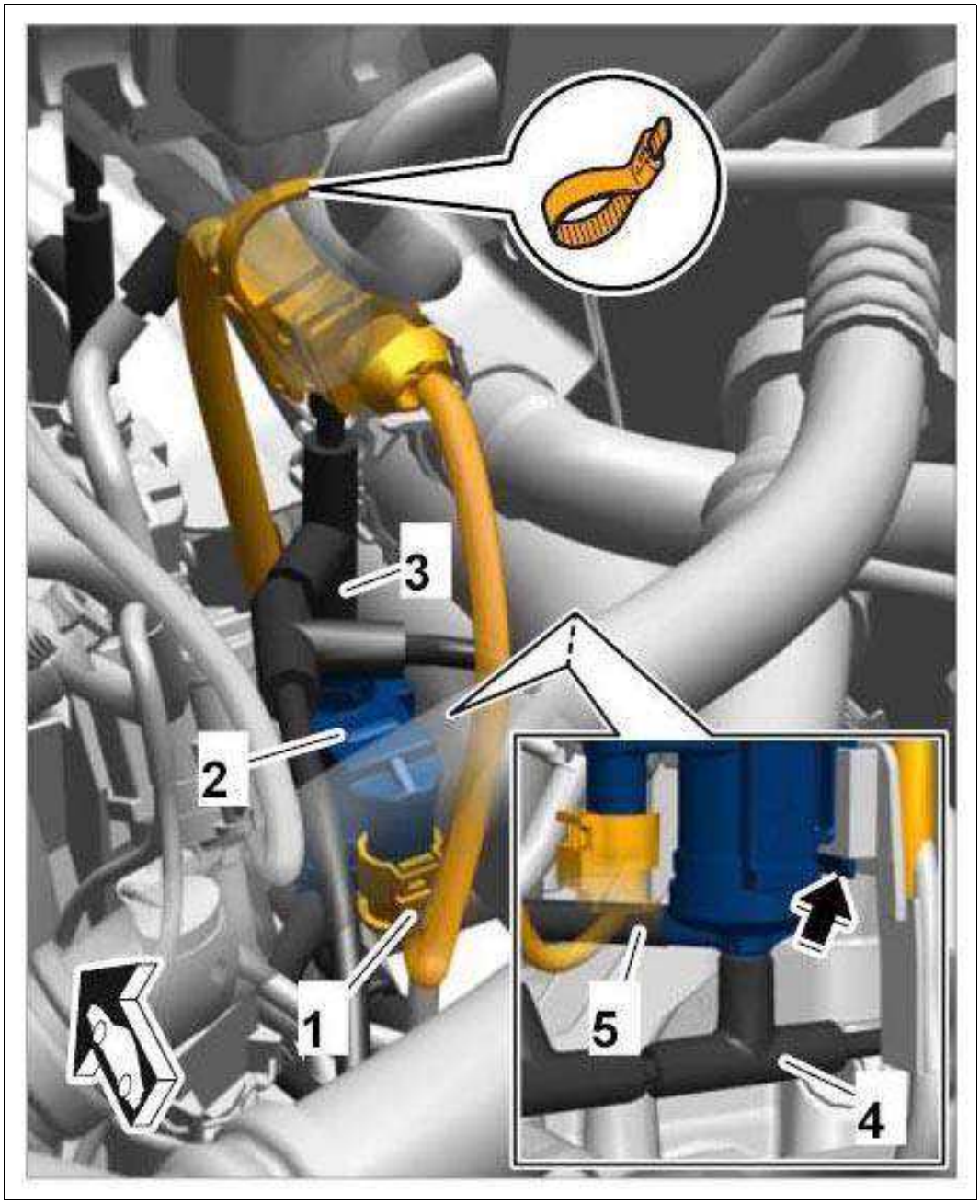

Courtesy of PORSCHE CARS NORTH AMERICA, INC.

6. **Change-over valve for intake manifold tuning flap:**

1. Electric plug connection

2. Change-over valve for tuning flap

3. Fresh-air line

4. Vacuum line (supply)

5. Vacuum line for tuning flap

Fig 8: Locating Change-Over Valve For Tuning Flap

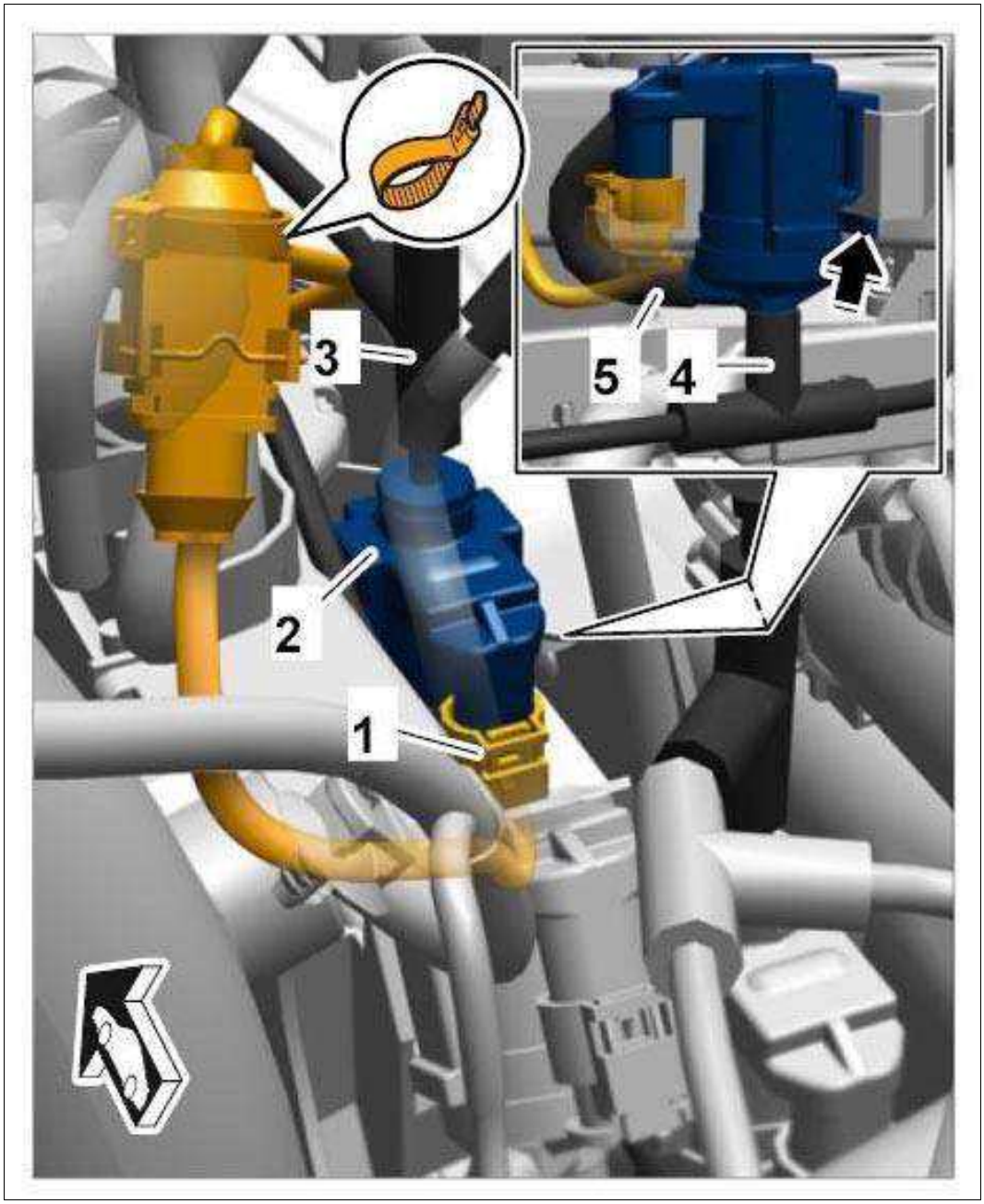

Courtesy of PORSCHE CARS NORTH AMERICA, INC.

7. **Change-over valve for shut-off valve for heat exchanger for gear wheel set oil on transmission:**

   Information: Turn change-over valve holder anti-clockwise by about 2 mm.

   1. Electric plug connection
   2. Change-over valve for shut-off valve for gear wheel set heat exchanger
   3. Fresh-air line
   4. Vacuum line (supply)

5. Vacuum line for shut-off valve for gear wheel set heat exchanger

Fig 9: Locating Change-Over Valve For Shut-Off Valve For Gear Wheel Set Heat Exchanger

Courtesy of PORSCHE CARS NORTH AMERICA, INC.

8. **Change-over valve for shut-off valve for clutch fluid heat exchanger:**

1. Electric plug connection
2. Change-over valve for shut-off valve for clutch fluid heat exchanger
3. Fresh-air line
4. Vacuum line (supply)
5. Vacuum line for shut-off valve for clutch fluid heat exchanger

Fig 10: Locating Change-Over Valve For Clutch Fluid Heat Exchanger

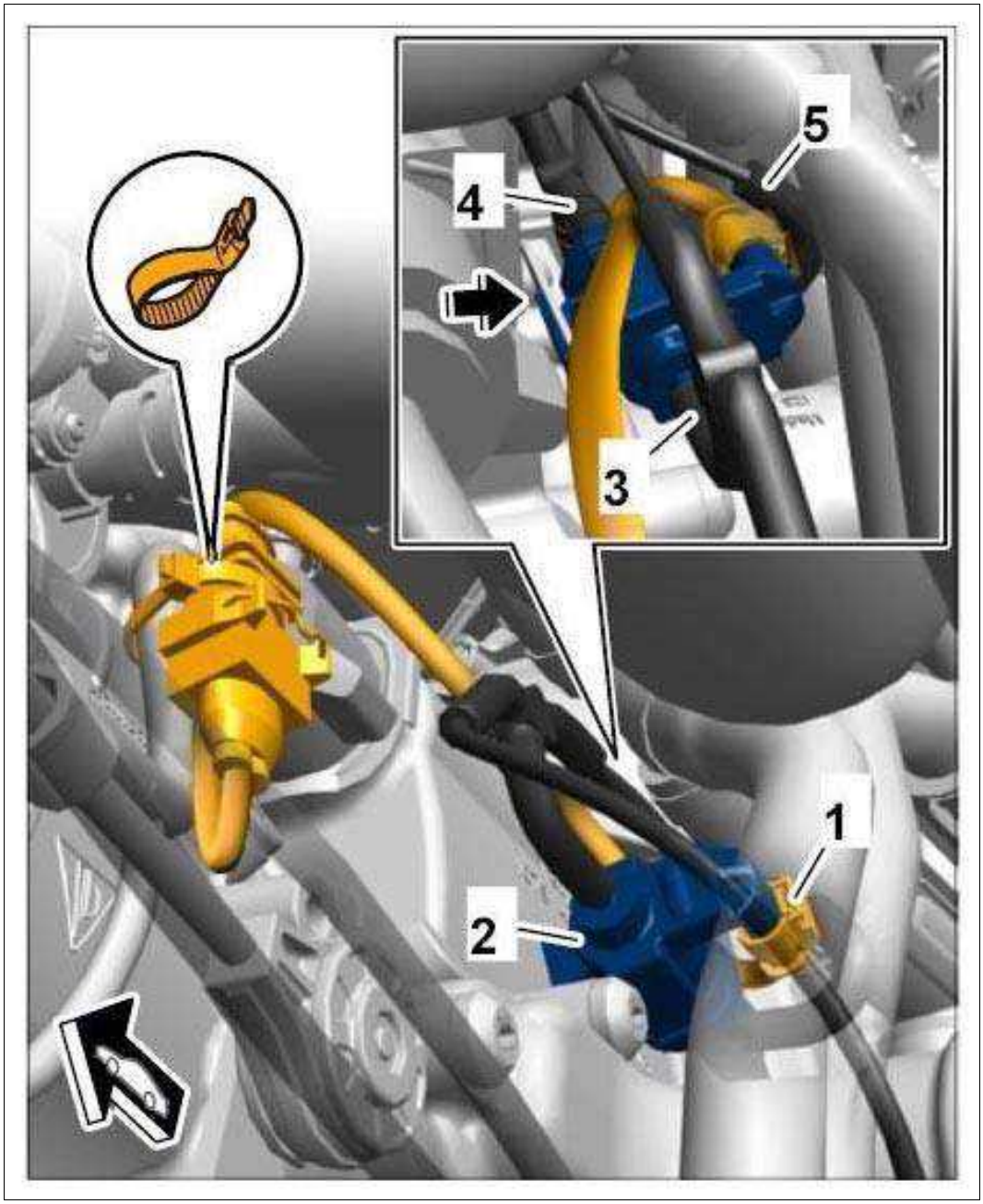

Courtesy of PORSCHE CARS NORTH AMERICA, INC.

WM 2400IN OVERVIEW OF VACUUM SYSTEM, LINE ROUTING, CHANGE-OVER VALVES (EXCEPT CARRERA "EDITION", CARRERA CABRIOLET "EDITION", TURBO S, CARRERA 4 "EDITION", TURBO CABRIO, TURBO S CABRIO, CARRERA 4 CABRIOLET "EDITION", GT3, GT3 RS) > INFORMATION > LINE ROUTING FOR ENGINE AND TRANSMISSION > OVERVIEW OF VACUUM SYSTEM ON MANUAL TRANSMISSION

Fig 1: Overview Of Vacuum System On Manual Transmission

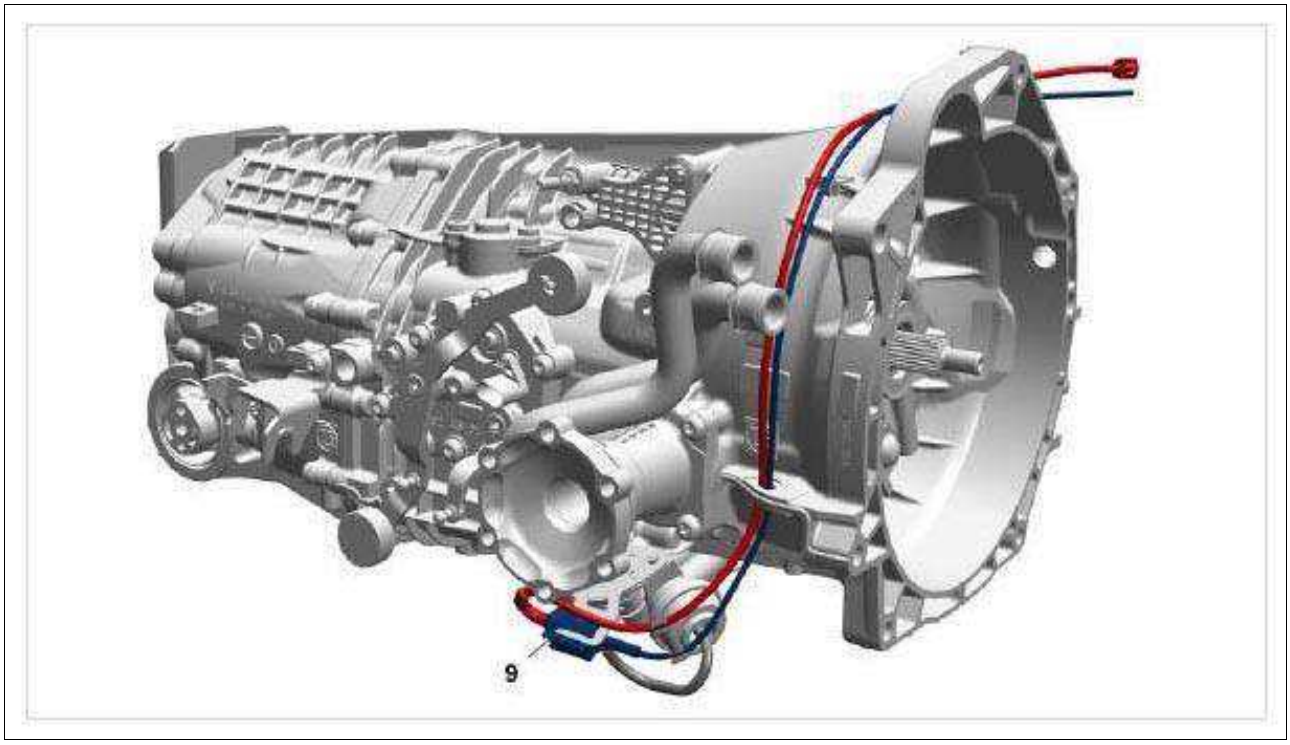

Courtesy of PORSCHE CARS NORTH AMERICA, INC.

Control valve for shut-off valve for transmission oil heat exchanger

Red - Clean-air line

Blue - Vacuum supply

WM 2400IN OVERVIEW OF VACUUM SYSTEM, LINE ROUTING, CHANGE-OVER VALVES (EXCEPT CARRERA "EDITION", CARRERA CABRIOLET "EDITION", TURBO S, CARRERA 4 "EDITION", TURBO CABRIO, TURBO S CABRIO, CARRERA 4 CABRIOLET "EDITION", GT3, GT3 RS) > INFORMATION > LINE ROUTING FOR ENGINE AND TRANSMISSION > OVERVIEW OF VACUUM SYSTEM ON PORSCHE DOPPELKUPPLUNG (PDK)

Fig 1: Identifying Vacuum System On Porsche Doppelkupplung (PDK)

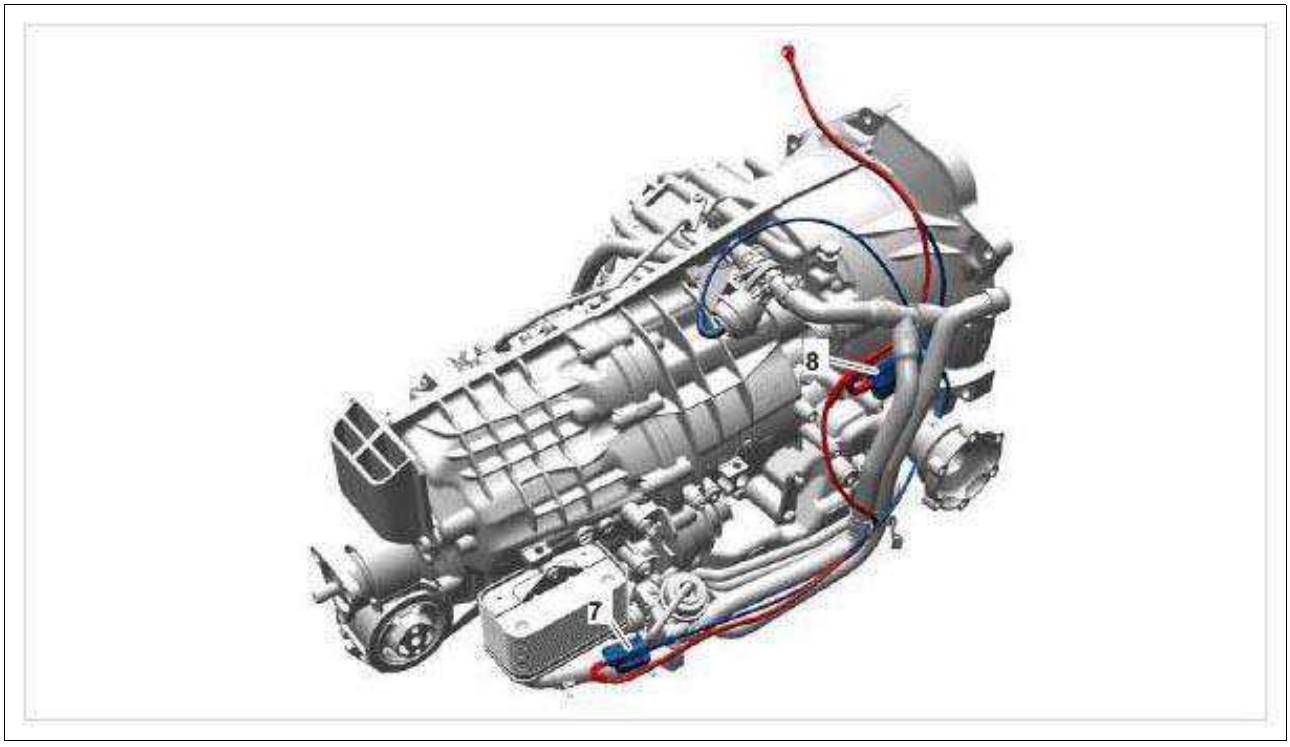

Courtesy of PORSCHE CARS NORTH AMERICA, INC.

Change-over valve for shut-off valve for heat exchanger for gear wheel set oil

Change-over valve for shut-off valve for clutch fluid heat exchanger

Red - Clean-air line

Blue - Vacuum supply

WM 2400IN OVERVIEW OF VACUUM SYSTEM, LINE ROUTING, CHANGE-OVER VALVES (EXCEPT CARRERA "EDITION", CARRERA CABRIOLET "EDITION", TURBO S, CARRERA 4 "EDITION", TURBO CABRIO, TURBO S CABRIO, CARRERA 4 CABRIOLET "EDITION", GT3, GT3 RS) > INFORMATION > PARTIAL ROUTING ON PORSCHE DOPPELKUPPLUNG (PDK)

Change-over valve for shut-off valve for heat exchanger for gear wheel set oil

Change-over valve for shut-off valve for clutch fluid heat exchanger

Red - Clean-air line

Blue - Vacuum supply

Fig 1: Identifying Shut-Off Valve Changeover Valve For Clutch Fluid Heat Exchanger

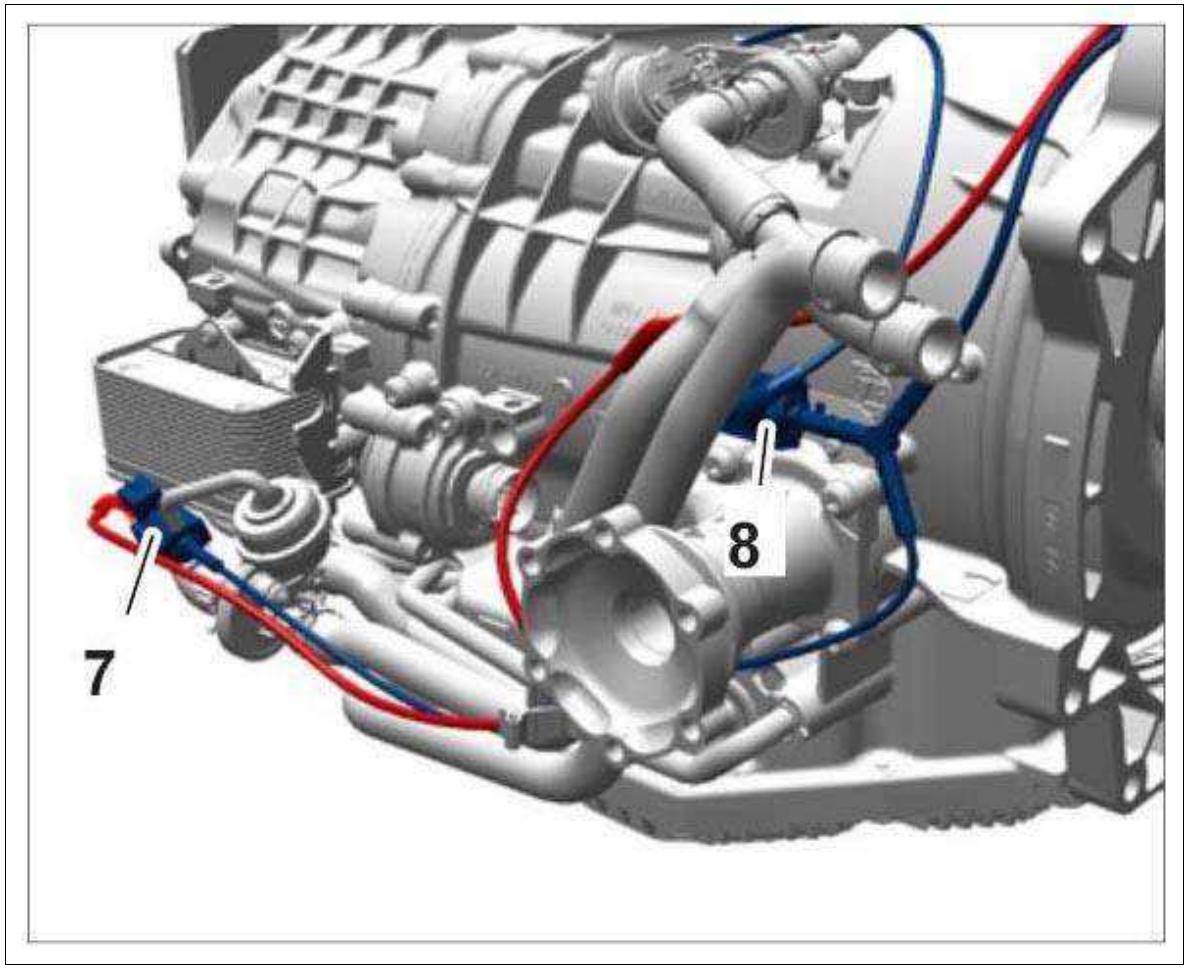

Courtesy of PORSCHE CARS NORTH AMERICA, INC.

WM 2400IN OVERVIEW OF VACUUM SYSTEM, LINE ROUTING, CHANGE-OVER VALVES (EXCEPT CARRERA "EDITION", CARRERA CABRIOLET "EDITION", TURBO S, CARRERA 4 "EDITION", TURBO CABRIO, TURBO S CABRIO, CARRERA 4 CABRIOLET "EDITION", GT3, GT3 RS) > INFORMATION > PARTIAL ROUTING ON PORSCHE DOPPELKUPPLUNG (PDK) > LINE ROUTING ON RIGHT BELT SIDE

Fig 1: Identifying Line Routing On Right Belt Side

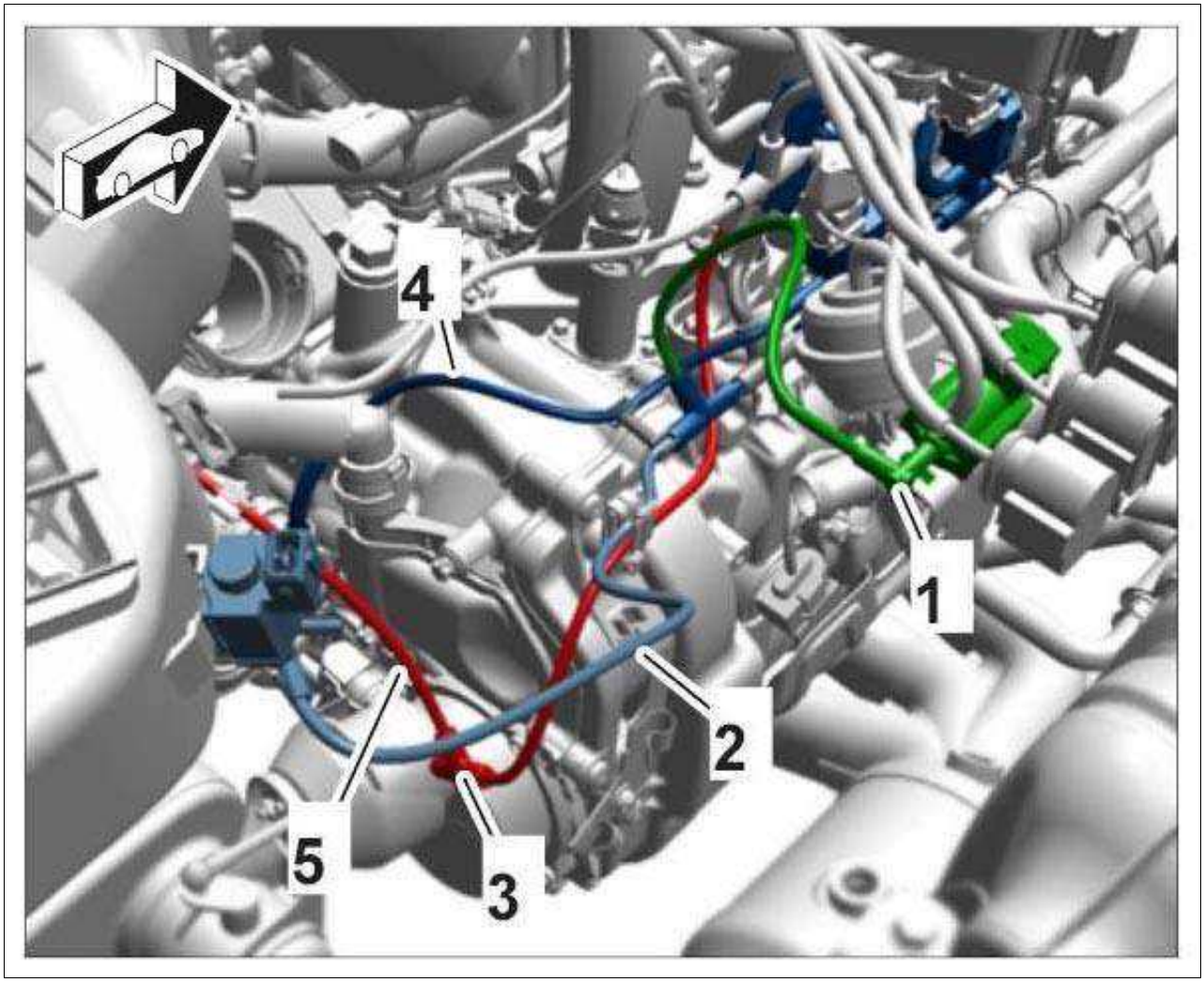

Courtesy of PORSCHE CARS NORTH AMERICA, INC.

1. Vacuum supply for change-over valve for coolant shut-off valve (bypass)
2. Vacuum supply for change-over valve for acoustic simulator
3. Vacuum line to control box for right exhaust flap
4. Vacuum line for coolant shut-off valve
5. Vacuum line for control box for left exhaust flap

WM 2400IN OVERVIEW OF VACUUM SYSTEM, LINE ROUTING, CHANGE-OVER VALVES (EXCEPT CARRERA "EDITION", CARRERA CABRIOLET "EDITION", TURBO S, CARRERA 4 "EDITION", TURBO CABRIO, TURBO S CABRIO, CARRERA 4 CABRIOLET "EDITION", GT3, GT3 RS) > INFORMATION > PARTIAL ROUTING ON PORSCHE DOPPELKUPPLUNG (PDK) > LINE ROUTING FOR EXHAUST FLAP CONTROL BOXES

Fig 1: Identifying Exhaust Flap Control Boxes Lines

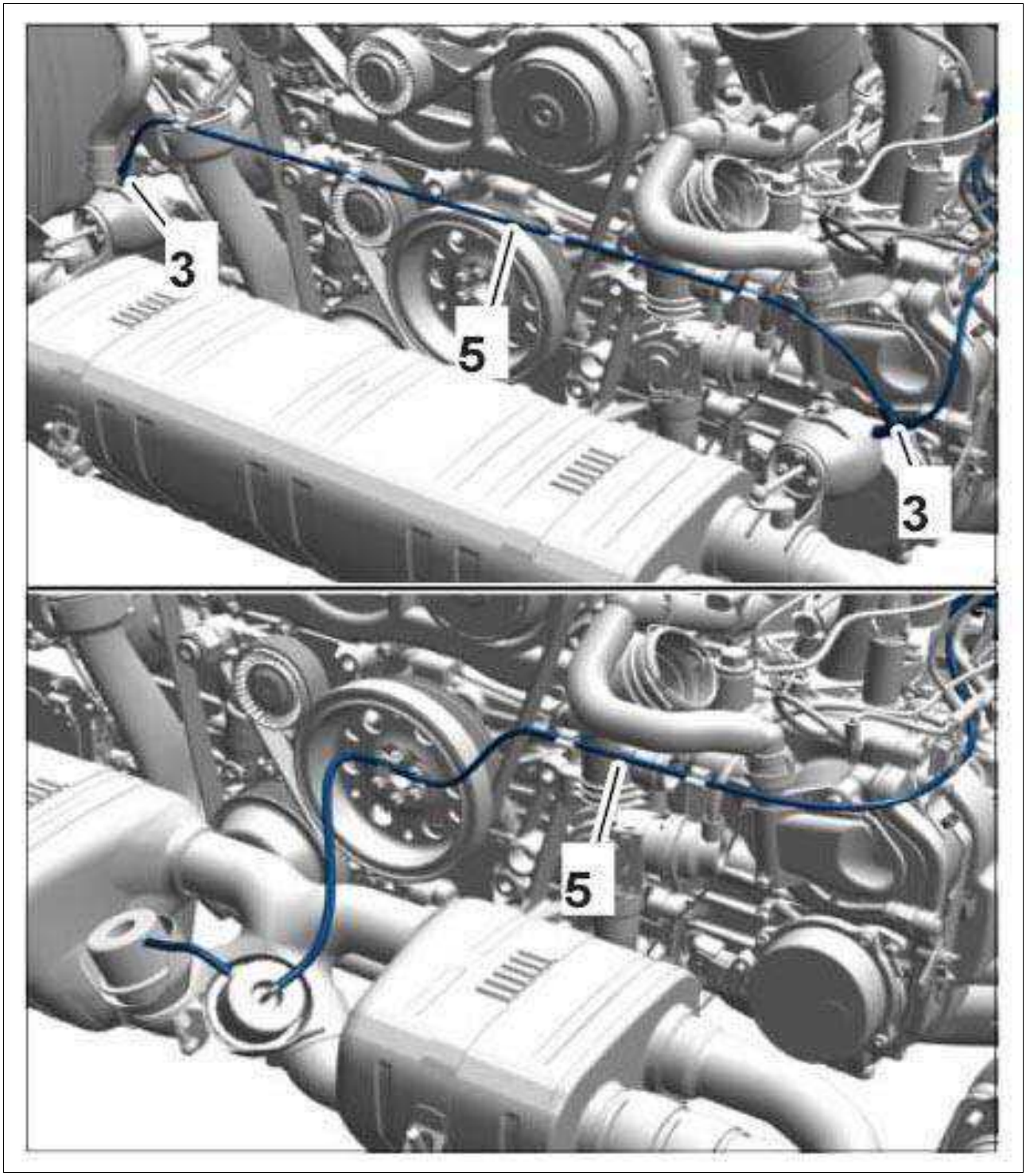

Courtesy of PORSCHE CARS NORTH AMERICA, INC.

Control box for exhaust flaps

Vacuum lines

WM 2400IN OVERVIEW OF VACUUM SYSTEM, LINE ROUTING, CHANGE-OVER VALVES (EXCEPT CARRERA "EDITION", CARRERA CABRIOLET "EDITION", TURBO

1. **Standard exhaust system with exhaust flaps:**

   Fig 1: Identifying Exhaust Flap System Line (3.8 L Standard)

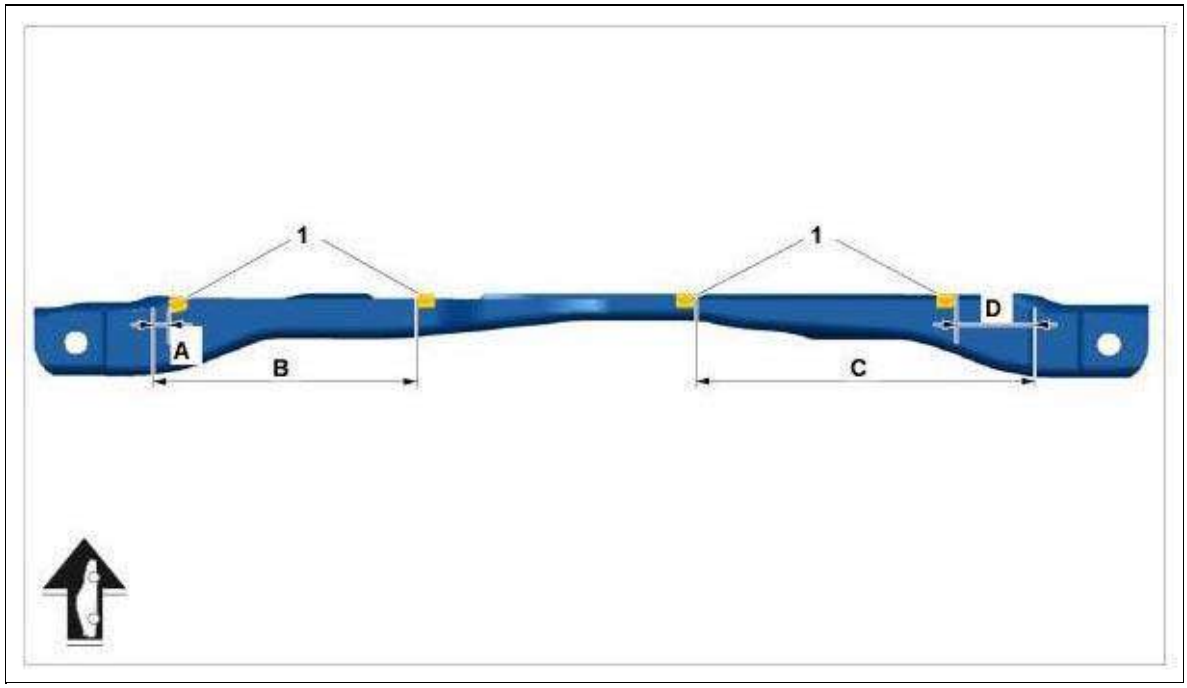

Courtesy of PORSCHE CARS NORTH AMERICA, INC.

1. Line clips on engine carrier

A. Distance to bead on left engine carrier: **12 mm** (+/- 1 mm)

B. Distance to bead on left engine carrier: **200 mm** (+/- 1 mm)

C. Distance to bead on right engine carrier: **257 mm** (+/- 1 mm)

D. Distance to bead on right engine carrier: **60 mm** (+/- 1 mm)

2. **Sports exhaust system:**

Fig 2: Identifying Line Attachment On Engine Carrier - Sports Exhaust System

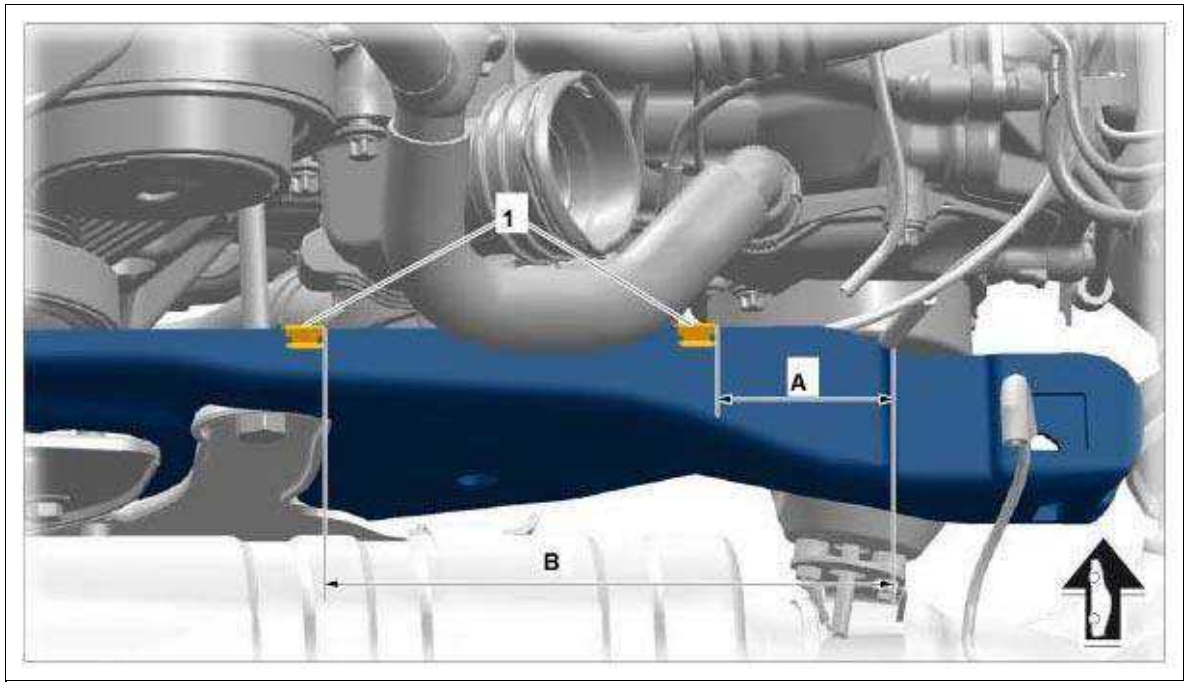

Courtesy of PORSCHE CARS NORTH AMERICA, INC.

1. Line clips on engine carrier

A. Distance to bead on right engine carrier: **50 mm**

B. Distance to bead on right engine carrier: **180 mm**

WM 2400IN OVERVIEW OF VACUUM SYSTEM, LINE ROUTING, CHANGE-OVER VALVES (EXCEPT CARRERA "EDITION", CARRERA CABRIOLET "EDITION", TURBO S, CARRERA 4 "EDITION", TURBO CABRIO, TURBO S CABRIO, CARRERA 4 CABRIOLET "EDITION", GT3, GT3 RS) > INFORMATION > PARTIAL ROUTING ON PORSCHE DOPPELKUPPLUNG (PDK) > LINE ROUTING FOR ENGINE - CYLINDER BANK 4-6

Fig 1: Identifying Engine Lines - Cylinder Bank 4-6

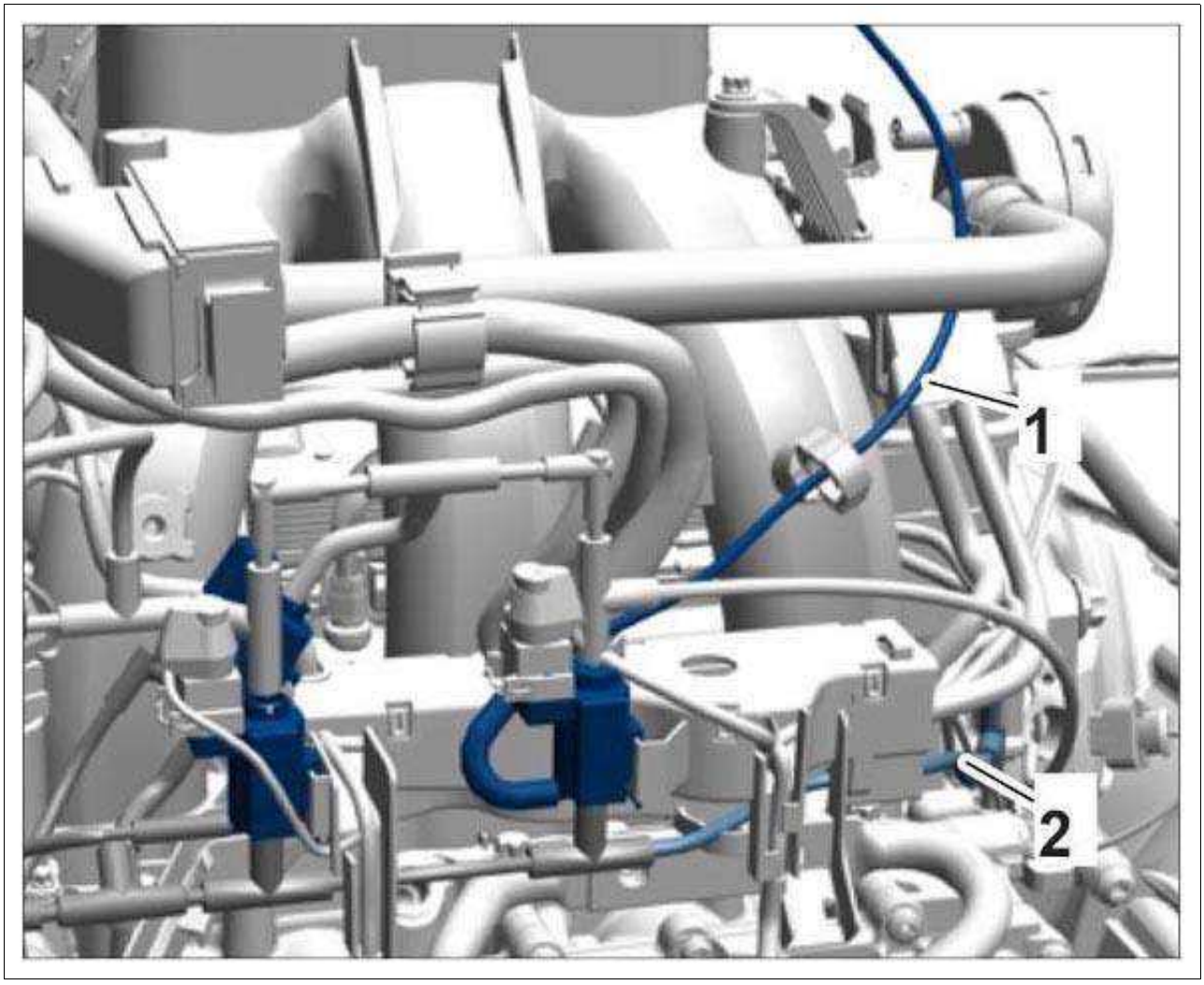

Courtesy of PORSCHE CARS NORTH AMERICA, INC.

1. Vacuum line for tuning flap control box
2. Vacuum line for supplying the control valves on the transmission

WM 2400IN OVERVIEW OF VACUUM SYSTEM, LINE ROUTING, CHANGE-OVER VALVES (EXCEPT CARRERA "EDITION", CARRERA CABRIOLET "EDITION", TURBO S, CARRERA 4 "EDITION", TURBO CABRIO, TURBO S CABRIO, CARRERA 4 CABRIOLET "EDITION", GT3, GT3 RS) > INFORMATION > PARTIAL ROUTING ON PORSCHE DOPPELKUPPLUNG (PDK) > LINE ROUTING ON FLYWHEEL SIDE

1. Vacuum line for tuning flap control box
2. Vacuum line with T-piece: Output upwards for supplying the control valves on the transmission
3. Clean-air line
4. Vacuum line for connecting to vacuum pump supply line

Fig 1: Identifying Transmission Lines And Intake Manifold

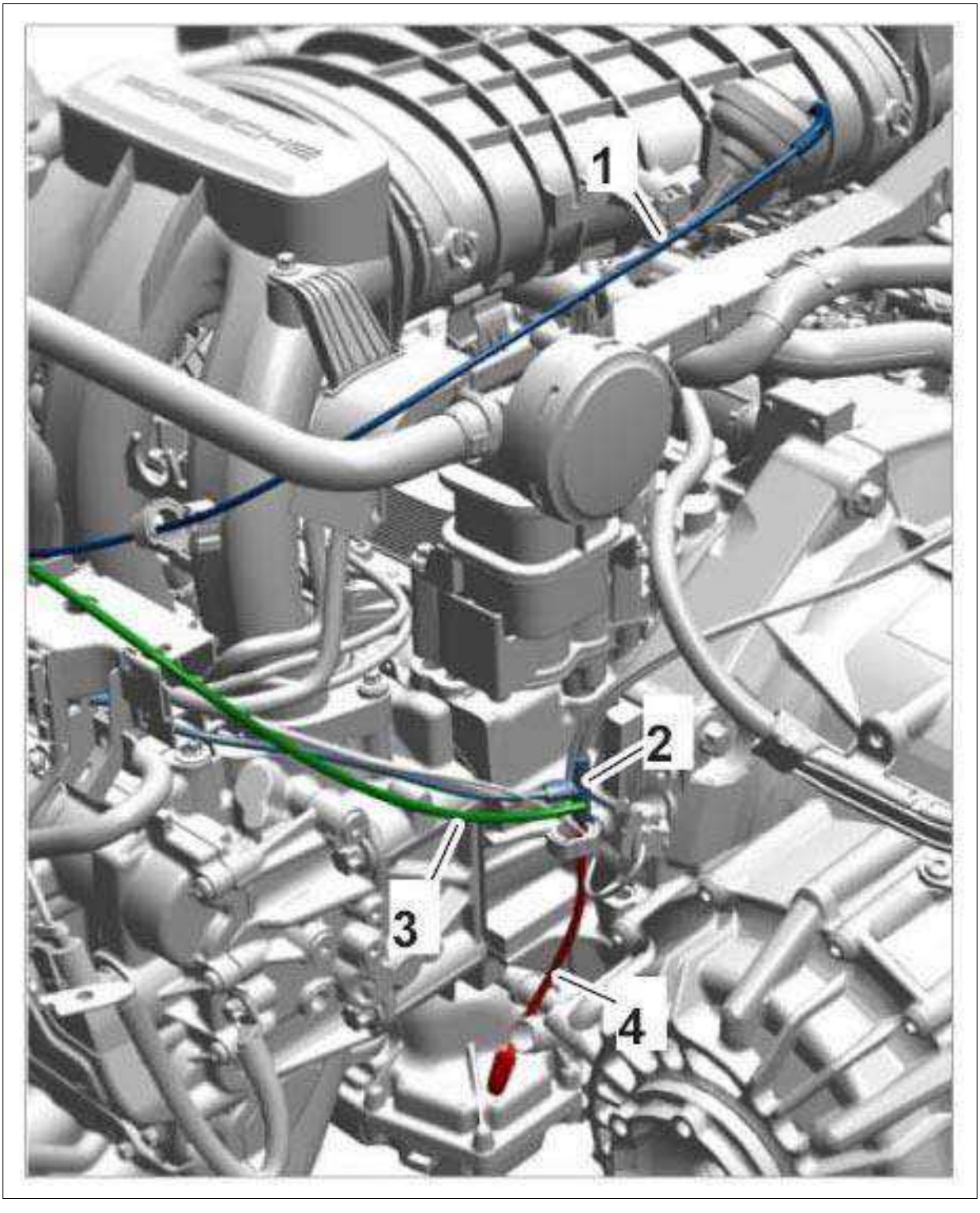

Courtesy of PORSCHE CARS NORTH AMERICA, INC.

WM 242420 REMOVING AND INSTALLING AIR-CLEANER ELEMENTS (GT3 RS) > TECHNICAL VALUES

Location	Description	Type	Basic value	Tolerance 1	Tolerance 2
Air cleaner housing cover	Tapping screws	Tightening torque	3 Nm (2 ftlb.)		

WM 242420 REMOVING AND INSTALLING AIR-CLEANER ELEMENTS (GT3 RS) > PRELIMINARY WORK

1. Remove rear apron.

   → WM 635519 REMOVING AND INSTALLING REAR APRON (ALL MODELS)

WM 242420 REMOVING AND INSTALLING AIR-CLEANER ELEMENTS (GT3 RS) > REMOVING AIR-CLEANER ELEMENTS

Information

- Be careful with the rubber sleeves on the body support.

1. Remove air cleaner housing cover **-1-** .

   1. 1.1. Unscrew tapping screws (self-locking) **-2-** .
   2. 1.2. Remove cover.

   Fig 1: Identifying Air Cleaner Housing Cover

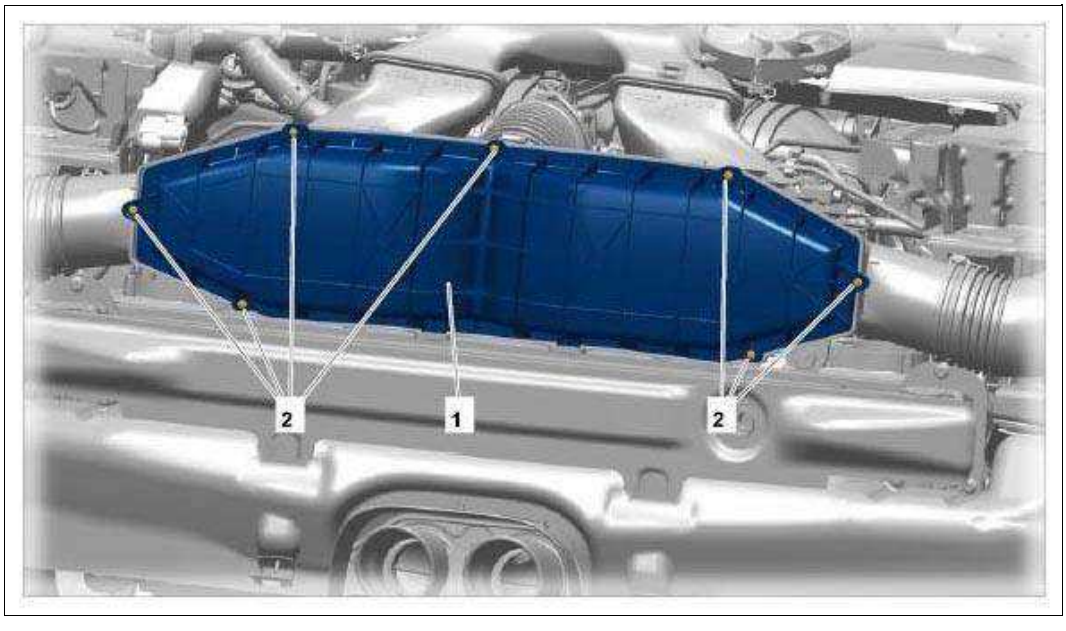

Courtesy of PORSCHE CARS NORTH AMERICA, INC.

2. Remove air-cleaner elements **-2-** from the housing shell **-1-** .

   1. 2.1. Replace air-cleaner elements in accordance with the service interval.

Fig 2: Identifying Air-Cleaner Elements

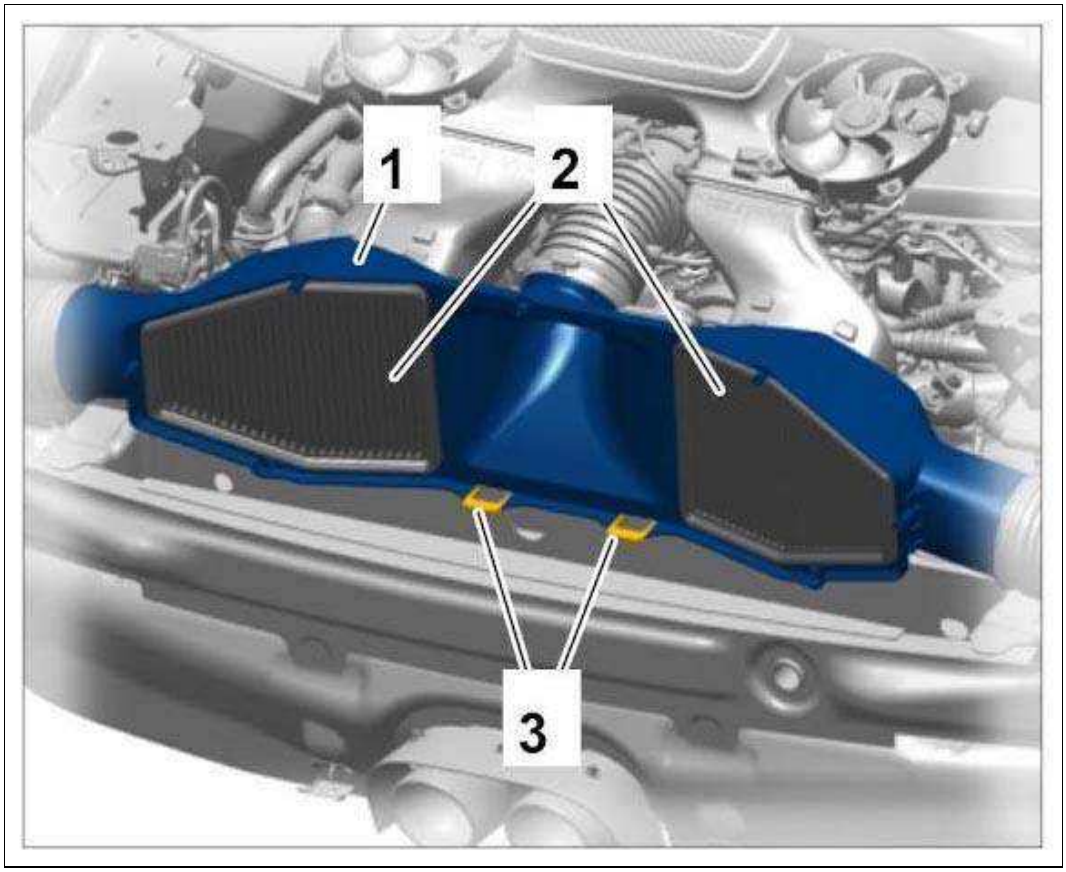

Courtesy of PORSCHE CARS NORTH AMERICA, INC.

3. Clean the inside of the housing shells with a damp cloth and some washing-up liquid.

   Do not use harsh cleaning agents!

WM 242420 REMOVING AND INSTALLING AIR-CLEANER ELEMENTS (GT3 RS) > INSTALLING AIR-CLEANER ELEMENTS

1. Insert air-cleaner elements **-2-** .

   1. 1.1. Position cover with the locking lugs at the tabs **-3-** on the housing shell.

Fig 1: Identifying Air-Cleaner Elements

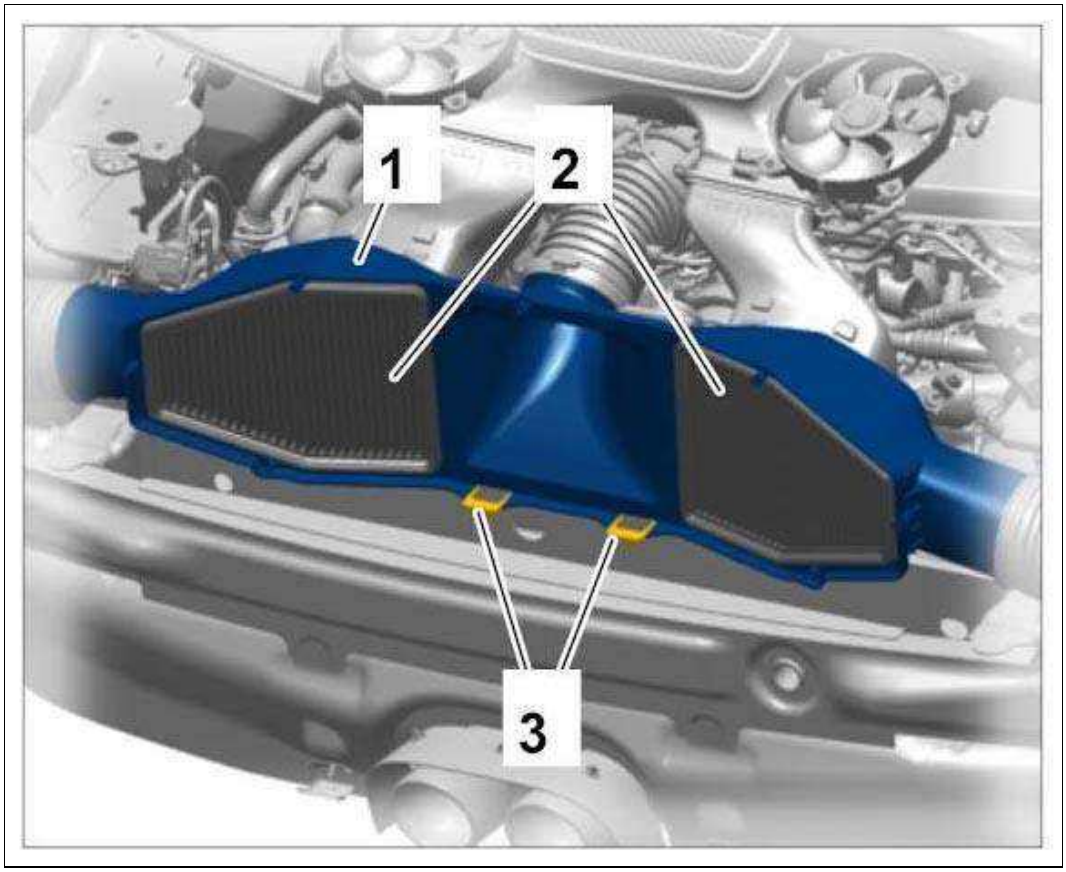

Courtesy of PORSCHE CARS NORTH AMERICA, INC.

2. Secure cover **-1-** using screws **-2-** .

   Tightening torque 3 Nm (2 ftlb.)

Fig 2: Identifying Air Cleaner Housing Cover

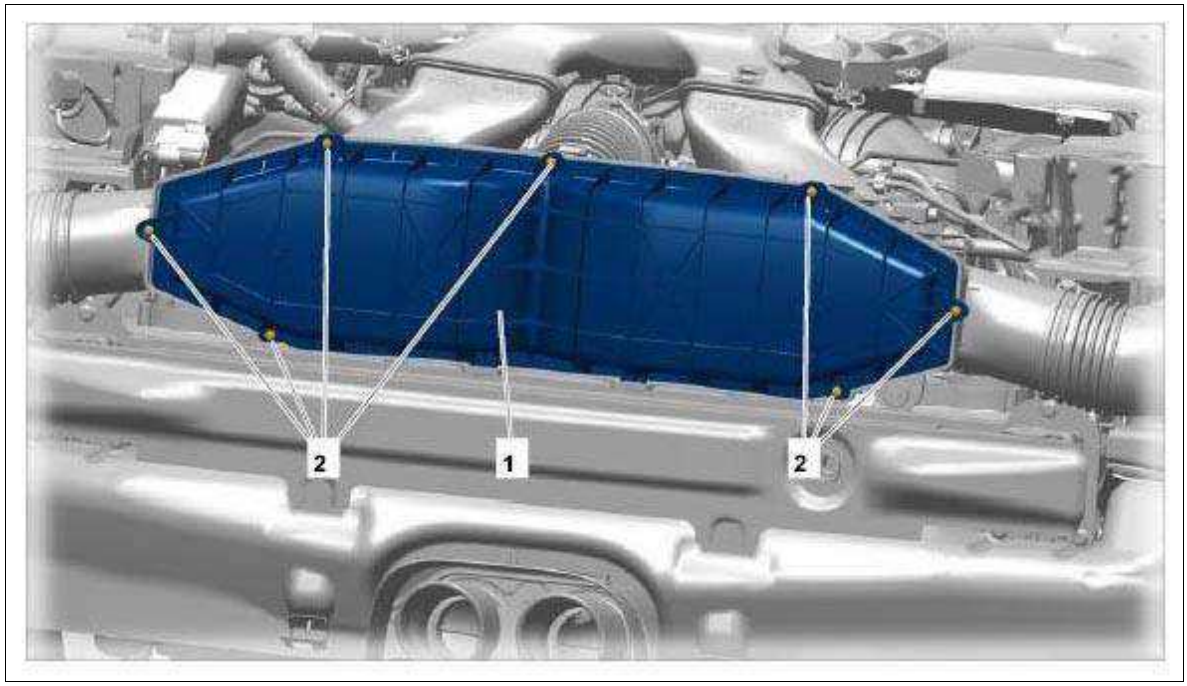

Courtesy of PORSCHE CARS NORTH AMERICA, INC.

WM 242420 REMOVING AND INSTALLING AIR-CLEANER ELEMENTS (GT3 RS) > SUBSEQUENT WORK

1. Install rear apron.

   → Installing Rear Apron

WM 242420 REMOVING AND INSTALLING AIR-CLEANER ELEMENT (EXCEPT CARRERA "EDITION", CARRERA CABRIOLET "EDITION", TURBO, TURBO S, CARRERA 4 "EDITION", TURBO CABRIO, TURBO S CABRIO, CARRERA 4 CABRIOLET "EDITION", GT3) > TECHNICAL VALUES

Location	Description	Type	Basic value	Tolerance 1	Tolerance 2
Air cleaner housing cover to housing shell	Internal Torx screw, self-tapping	Tightening torque	3 Nm (2 ftlb.)		

WM 242420 REMOVING AND INSTALLING AIR-CLEANER ELEMENT (EXCEPT CARRERA "EDITION", CARRERA CABRIOLET "EDITION", TURBO, TURBO S, CARRERA 4 "EDITION", TURBO CABRIO, TURBO S CABRIO, CARRERA 4 CABRIOLET "EDITION", GT3) > PRELIMINARY WORK

1. Remove air cleaner housing.

   → 242519 REMOVING AND INSTALLING AIR CLEANER HOUSING .

WM 242420 REMOVING AND INSTALLING AIR-CLEANER ELEMENT (EXCEPT CARRERA "EDITION", CARRERA CABRIOLET "EDITION", TURBO, TURBO S, CARRERA 4 "EDITION", TURBO CABRIO, TURBO S CABRIO, CARRERA 4 CABRIOLET "EDITION", GT3) > REMOVING AIR-CLEANER ELEMENT

1. Remove air cleaner housing cover **-1-** .

    1. 1.1. Unscrew seven internal Torx screws **-2-** .

    2. 1.2. Remove air cleaner housing cover.

    Fig 1: Identifying Clean-Air Cup For Air Cleaner Housing (Shown On Carrera)

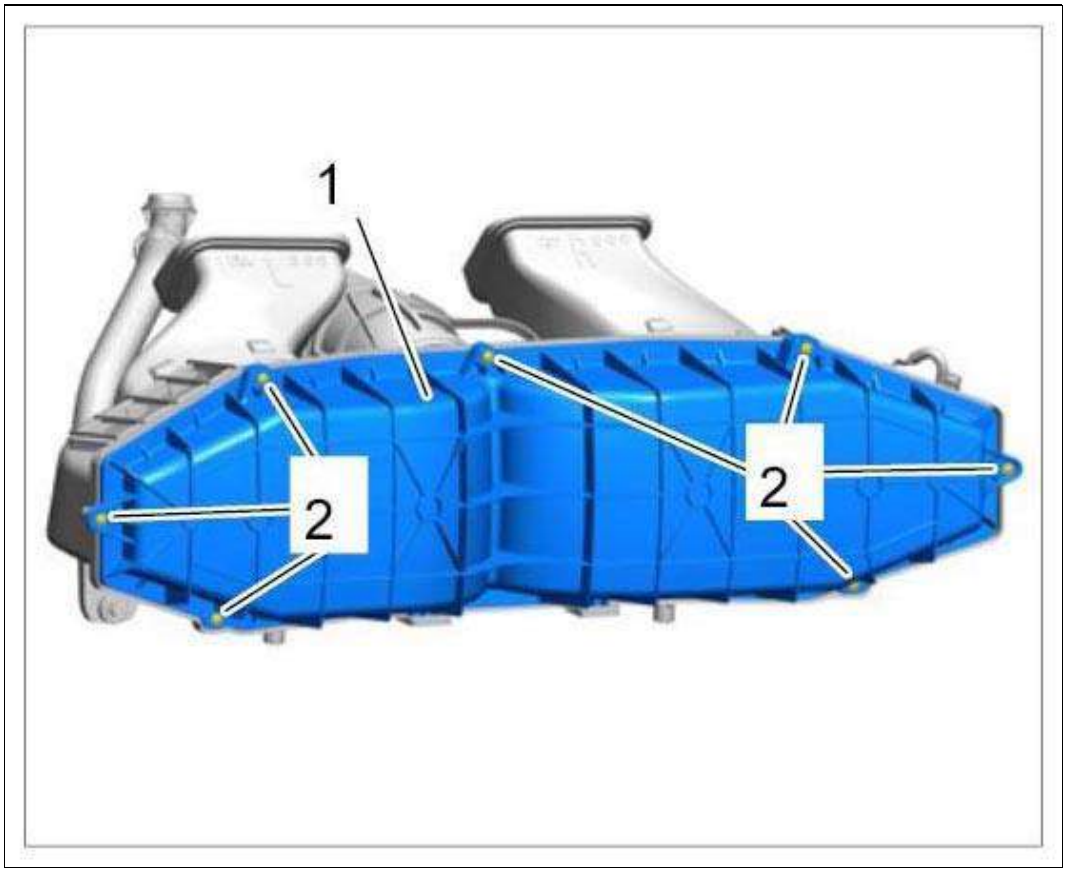

Courtesy of PORSCHE CARS NORTH AMERICA, INC.

2. Remove air-cleaner elements **-1-** from the housing shell **-2-** .

Fig 2: Identifying Air-Cleaner Elements

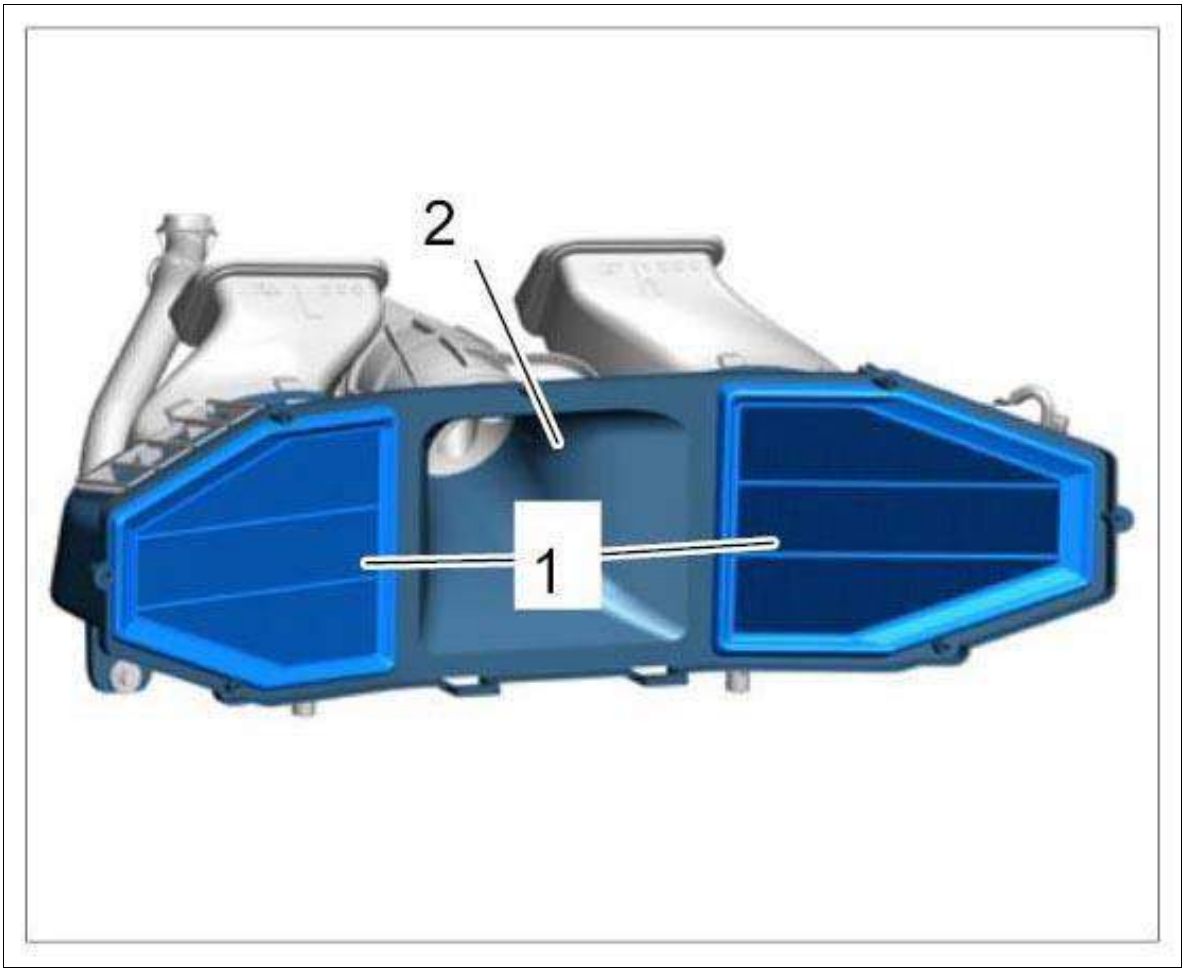

Courtesy of PORSCHE CARS NORTH AMERICA, INC.

3. Clean the inside of the air cleaner shell **-1-** with a damp cloth and some washing-up liquid if necessary.

   Do not use harsh cleaning agents!

Fig 3: Identifying Air Cleaner Housing Shell

Courtesy of PORSCHE CARS NORTH AMERICA, INC.

WM 242420 REMOVING AND INSTALLING AIR-CLEANER ELEMENT (EXCEPT CARRERA "EDITION", CARRERA CABRIOLET "EDITION", TURBO, TURBO S, CARRERA 4 "EDITION", TURBO CABRIO, TURBO S CABRIO, CARRERA 4 CABRIOLET "EDITION", GT3) > INSTALLING AIR-CLEANER ELEMENT

1. Insert air-cleaner elements into the housing shell.
2. Fit air cleaner housing cover into the housing shell by inserting the positioning tabs into the cut-outs **-1-** (**-arrows-**).

Fig 1: Positioning Tabs On Air Cleaner Housing Cover

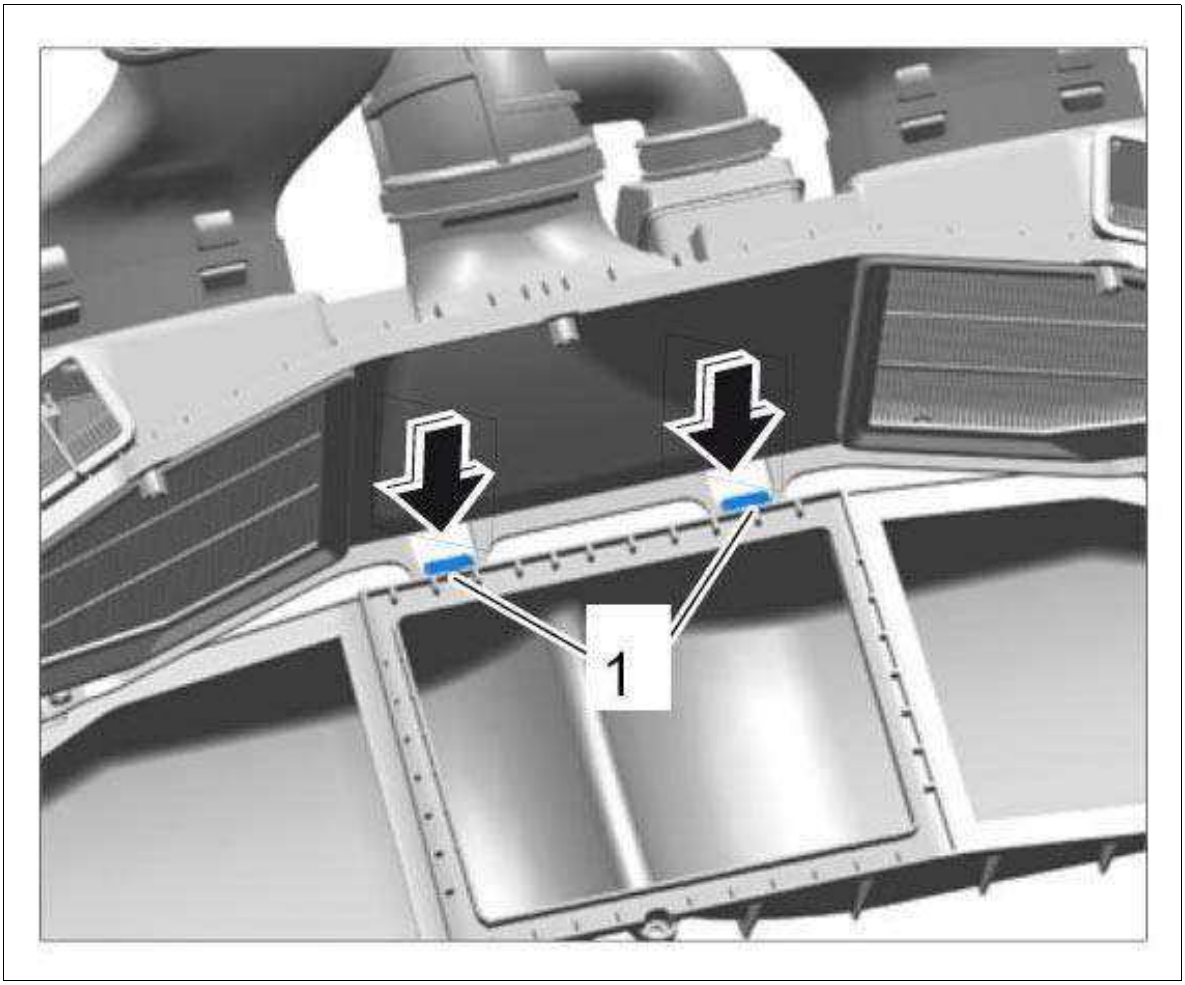

Courtesy of PORSCHE CARS NORTH AMERICA, INC.

3. Tighten seven screws on the air cleaner housing cover.

   → **Tightening torque: 3 Nm (2 ftlb.)**

WM 242420 REMOVING AND INSTALLING AIR-CLEANER ELEMENT (EXCEPT CARRERA "EDITION", CARRERA CABRIOLET "EDITION", TURBO, TURBO S, CARRERA 4 "EDITION", TURBO CABRIO, TURBO S CABRIO, CARRERA 4 CABRIOLET "EDITION", GT3) > SUBSEQUENT WORK

1. Install air cleaner housing.

   → Installing Air Cleaner Housing .

2. Install rear spoiler or lower part of lid lock (GT3).

   → Installing Rear Spoiler .

   → 558619 REMOVING AND INSTALLING LOWER PART OF REAR LID LOCK

WM 242519 REMOVING AND INSTALLING AIR CLEANER HOUSING (GT3, GT3 RS) >

PRELIMINARY WORK

1. Remove engine-compartment blower.

   → 198119 REMOVING AND INSTALLING ENGINE-COMPARTMENT BLOWER .

2. Remove lower part of lid lock.

   → 558619 REMOVING AND INSTALLING LOWER PART OF REAR LID LOCK .

WM 242519 REMOVING AND INSTALLING AIR CLEANER HOUSING (GT3, GT3 RS) > REMOVING AIR CLEANER HOUSING

Installation overview of air cleaner housing:

Fig 1: Overview Of Air Cleaner Housing

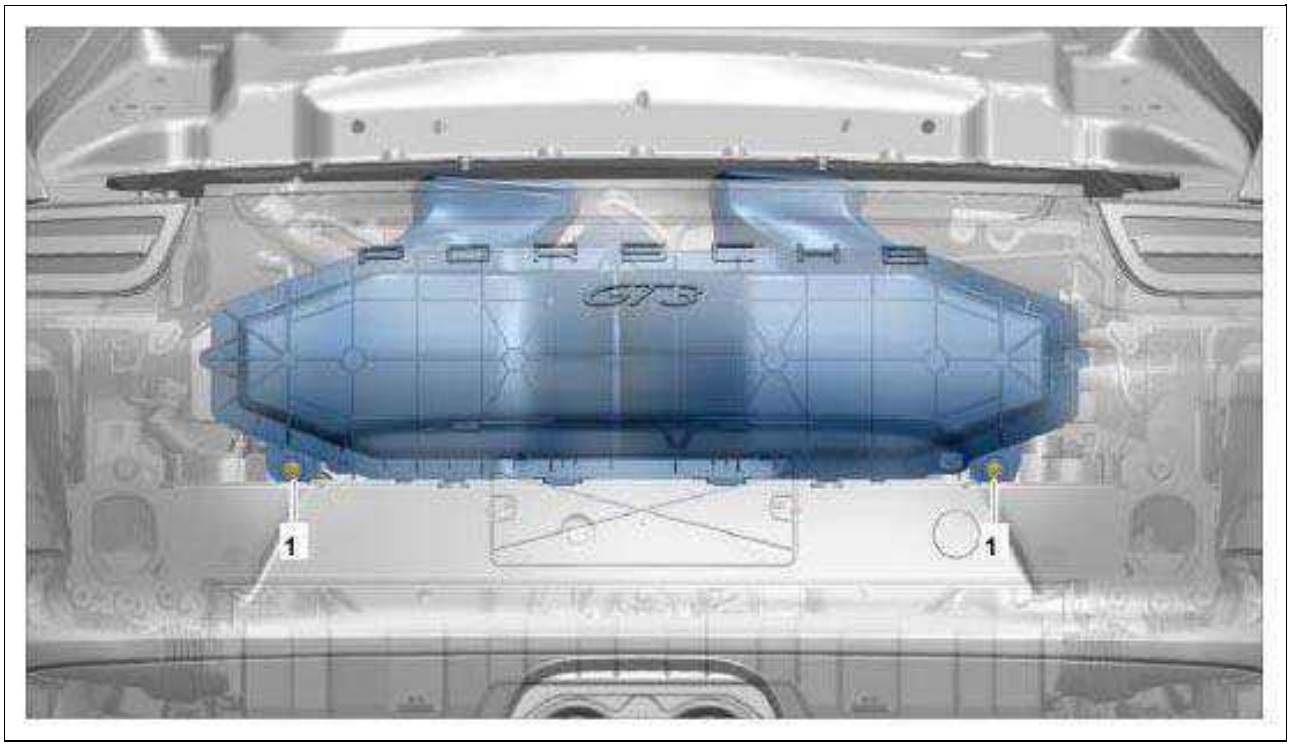

Courtesy of PORSCHE CARS NORTH AMERICA, INC.

1. Fastening screws for air cleaner housing

Air cleaner housing removed:

Fig 2: Identifying Air Cleaner Housing

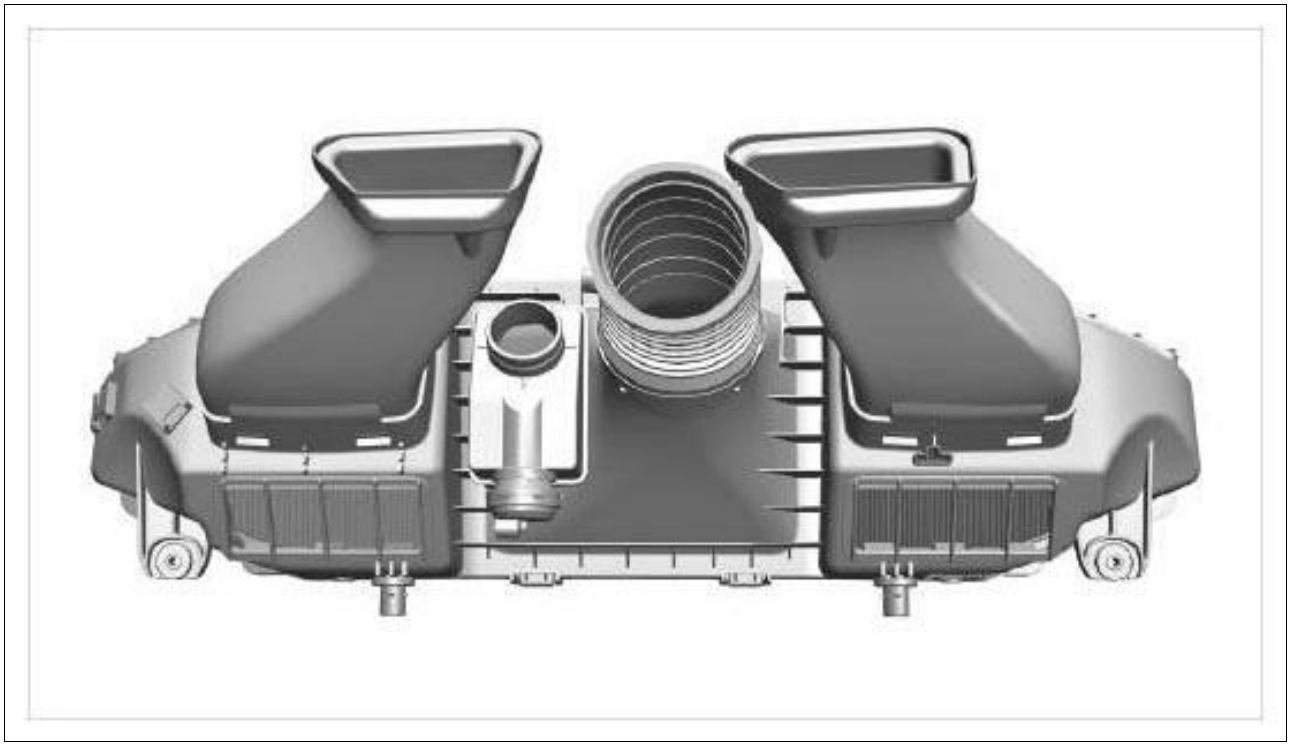

Courtesy of PORSCHE CARS NORTH AMERICA, INC.

1. Disconnect connecting lines to rubber shroud and rubber shroud on the throttle housing.
    1. 1.1. Open spring band clamps and pull off connecting lines **-1 and 2-** .
    2. 1.2. Open screw-type clamp **-3-** on the throttle body and pull off rubber sleeve.

Fig 3: Identifying Throttle Housing Rubber Sleeve

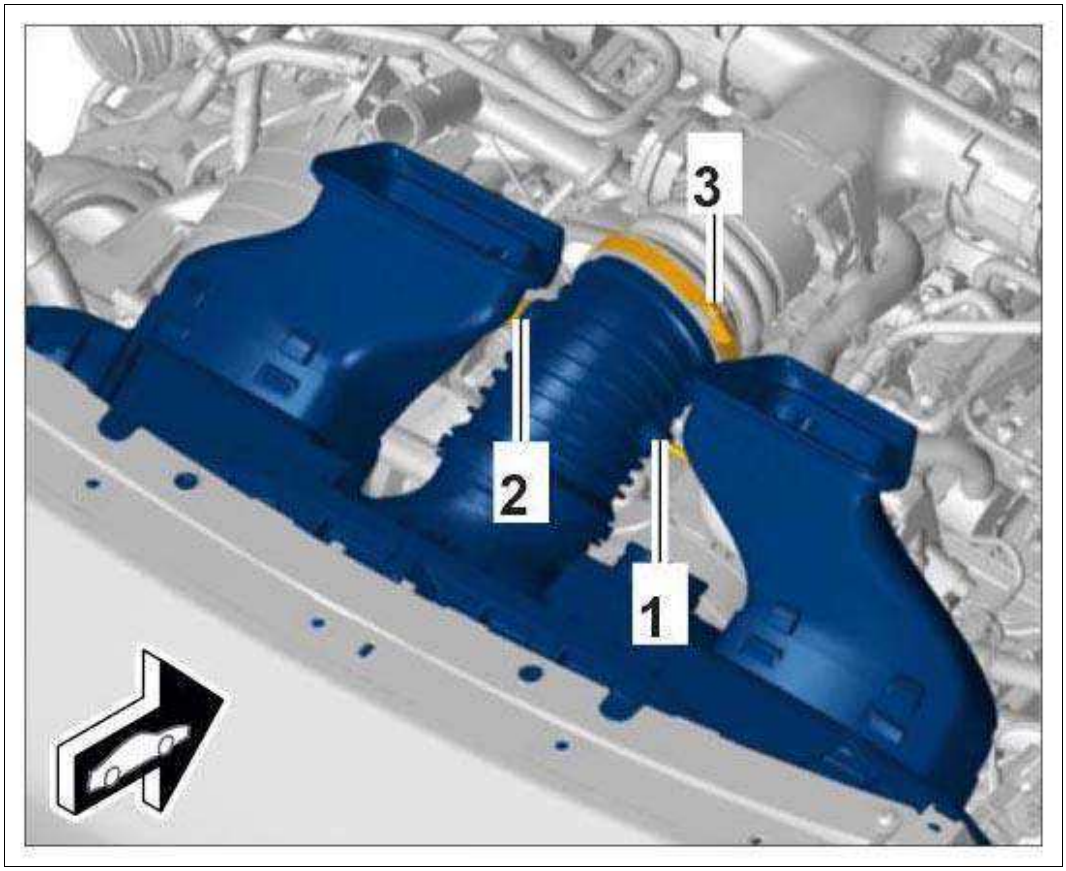

Courtesy of PORSCHE CARS NORTH AMERICA, INC.

2. Unscrew fastening screw on the air cleaner housing (right) **-1-** .

Fig 4: Identifying Air Cleaner Housing Screw (Right)

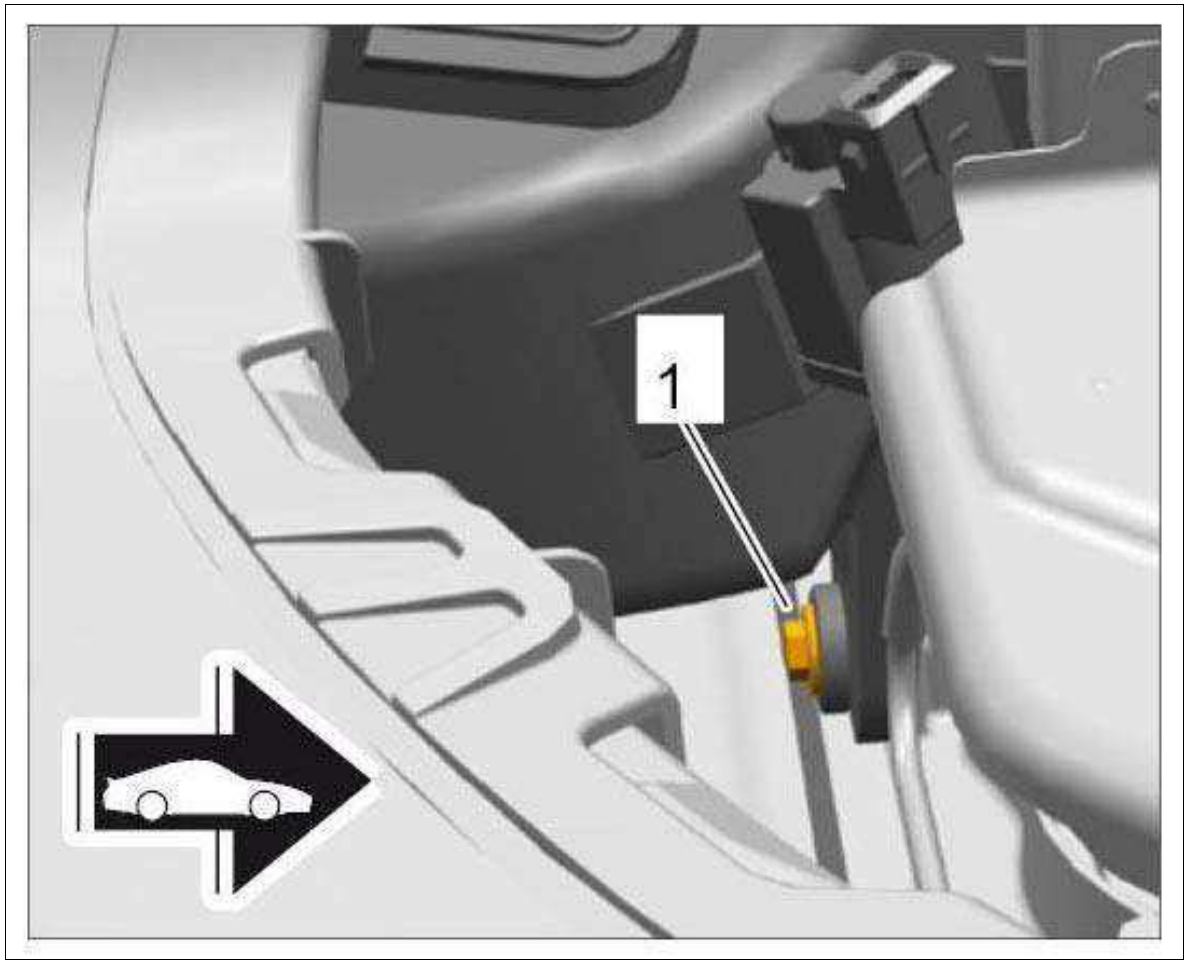

Courtesy of PORSCHE CARS NORTH AMERICA, INC.

3. Unscrew fastening screw on the air cleaner housing (left) **-2-** .

Fig 5: Identifying Air Cleaner Housing Screw (Left)

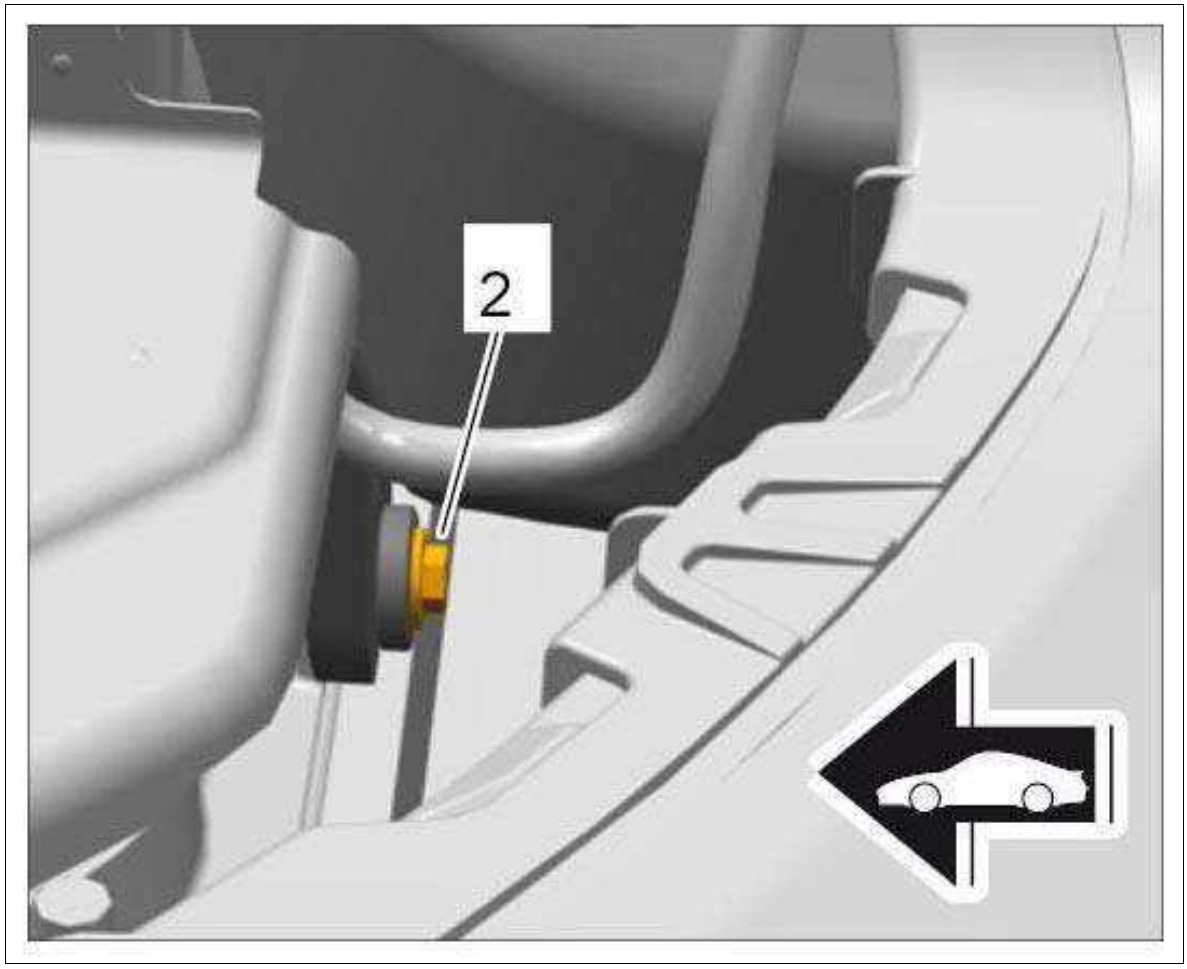

Courtesy of PORSCHE CARS NORTH AMERICA, INC.

4. Lift air cleaner housing **-1-** completely out of the engine compartment.

    1. 4.1. First guide the left side **-2-** out under the rear apron, then the right side **-3-** .
    2. 4.2. Lift air cleaner housing up and out **-arrows-** .

Fig 6: Lifting Air Cleaner Housing Out Of Engine Compartment

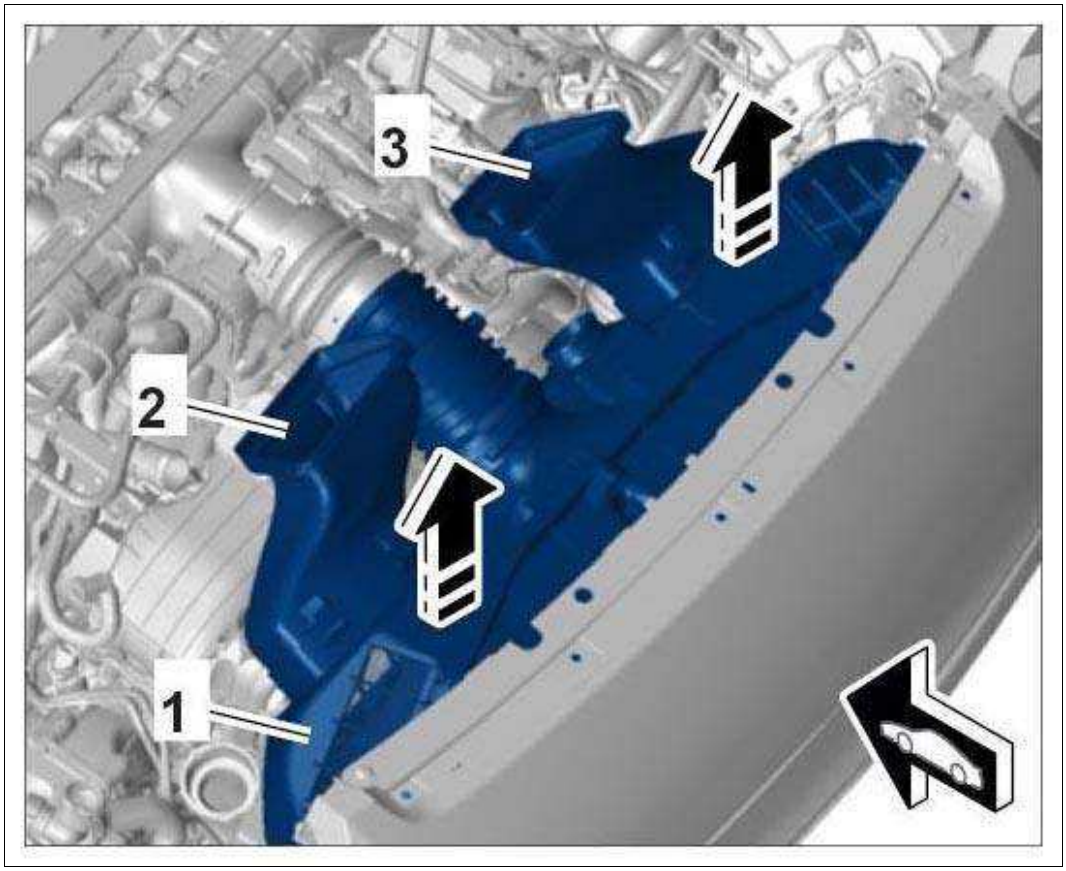

Courtesy of PORSCHE CARS NORTH AMERICA, INC.

5. Clean the housing with a damp cloth and some washing-up liquid if necessary.

   Do not use harsh cleaning agents!

WM 242519 REMOVING AND INSTALLING AIR CLEANER HOUSING (GT3, GT3 RS) > INSTALLING AIR CLEANER HOUSING

1. Position air cleaner housing in the engine compartment.
2. Fit rubber shroud **-3-** on the throttle housing.
    1. 2.1. Tighten screw-type clamp.
    2. 2.2. Connect connecting lines **-1 and 2-** and close spring band clamps.

Fig 1: Identifying Throttle Housing Rubber Sleeve

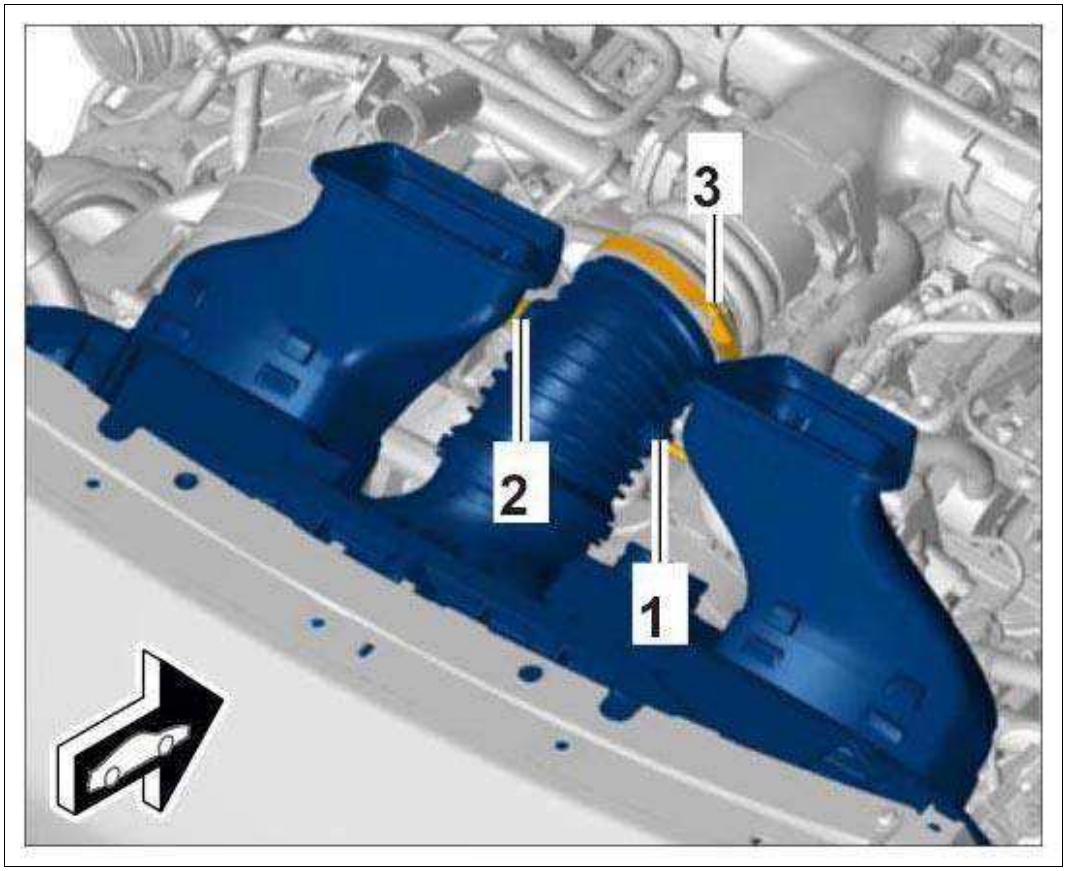

Courtesy of PORSCHE CARS NORTH AMERICA, INC.

3. Fit and tighten fastening screws for the air cleaner housing.

   Tool: Use 1/4-inch torque wrench -1-.

Fig 2: Tightening Air Cleaner Housing Fastening Screws (Right Side)

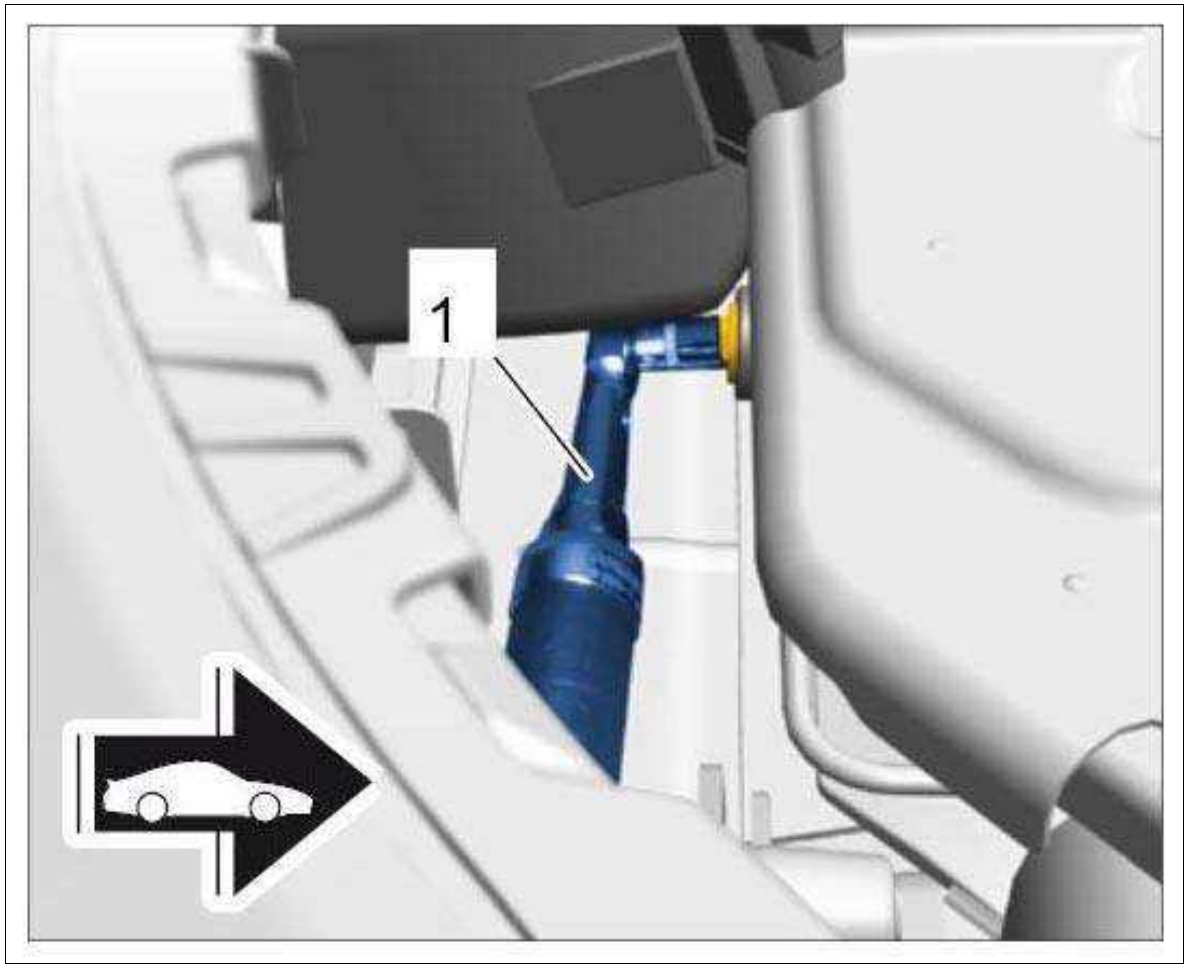

Courtesy of PORSCHE CARS NORTH AMERICA, INC.

WM 242519 REMOVING AND INSTALLING AIR CLEANER HOUSING (GT3, GT3 RS) > SUBSEQUENT WORK

1. Install lower part of lid lock.

   → 558619 REMOVING AND INSTALLING LOWER PART OF REAR LID LOCK .

2. Install engine-compartment blower.

   → Installing Engine-Compartment Blower .

WM 242519 REMOVING AND INSTALLING AIR CLEANER HOUSING (GT3 RS) > TECHNICAL VALUES

Location	Description	Type	Basic value	Tolerance 1	Tolerance 2
Rubber shroud to throttle housing	Screw-type clamp	Tightening torque	3 Nm (2 ftlb.)		

Air cleaner housing to body	Hexagon-head bolt with washer, M6 x 25	Tightening torque	7 Nm (5 ftlb.)
Air guide to air cleaner housing	Screw-type clamp	Tightening torque	3 Nm (2 ftlb.)

WM 242519 REMOVING AND INSTALLING AIR CLEANER HOUSING (GT3 RS) > PRELIMINARY WORK

1. Remove rear apron.

   → WM 635519 REMOVING AND INSTALLING REAR APRON (ALL MODELS)

WM 242519 REMOVING AND INSTALLING AIR CLEANER HOUSING (GT3 RS) > COMPONENT OVERVIEW

Installation position of air cleaner housing:

Fig 1: Overview Of Air Cleaner Housing - GT3 RS

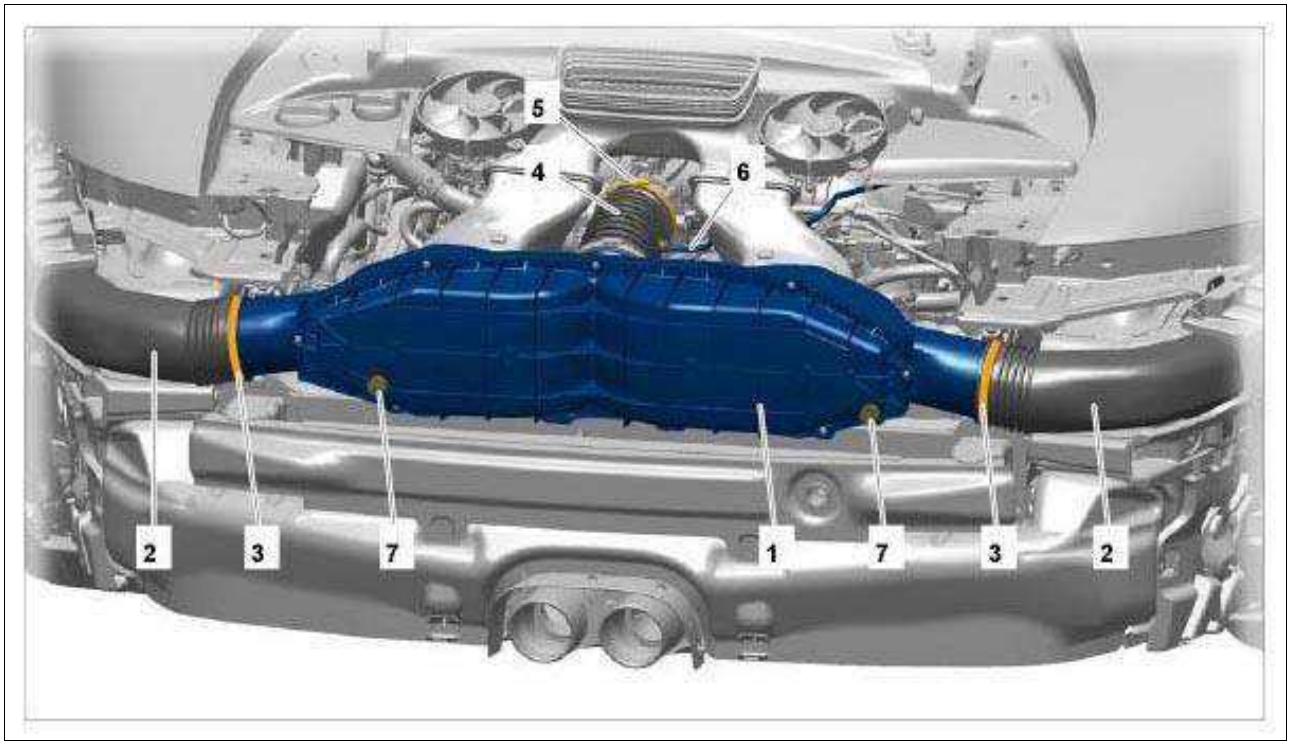

Courtesy of PORSCHE CARS NORTH AMERICA, INC.

1. Air cleaner housing
2. Rear air guide
3. Screw-type clamp
4. Rubber shroud for throttle housing
5. Screw-type clamp for rubber shroud

6. Vacuum hose

7. Screw connection on cross member

WM 242519 REMOVING AND INSTALLING AIR CLEANER HOUSING (GT3 RS) > REMOVING AIR CLEANER HOUSING

1. Loosen screw-type clamp **-2-** for rubber shroud **-1-** on the throttle housing and pull off vacuum line **-3-** .

    1. 1.1. Pull rubber shroud off the throttle housing.

    Fig 1: Identifying Rubber Shroud On Air Cleaner Housing

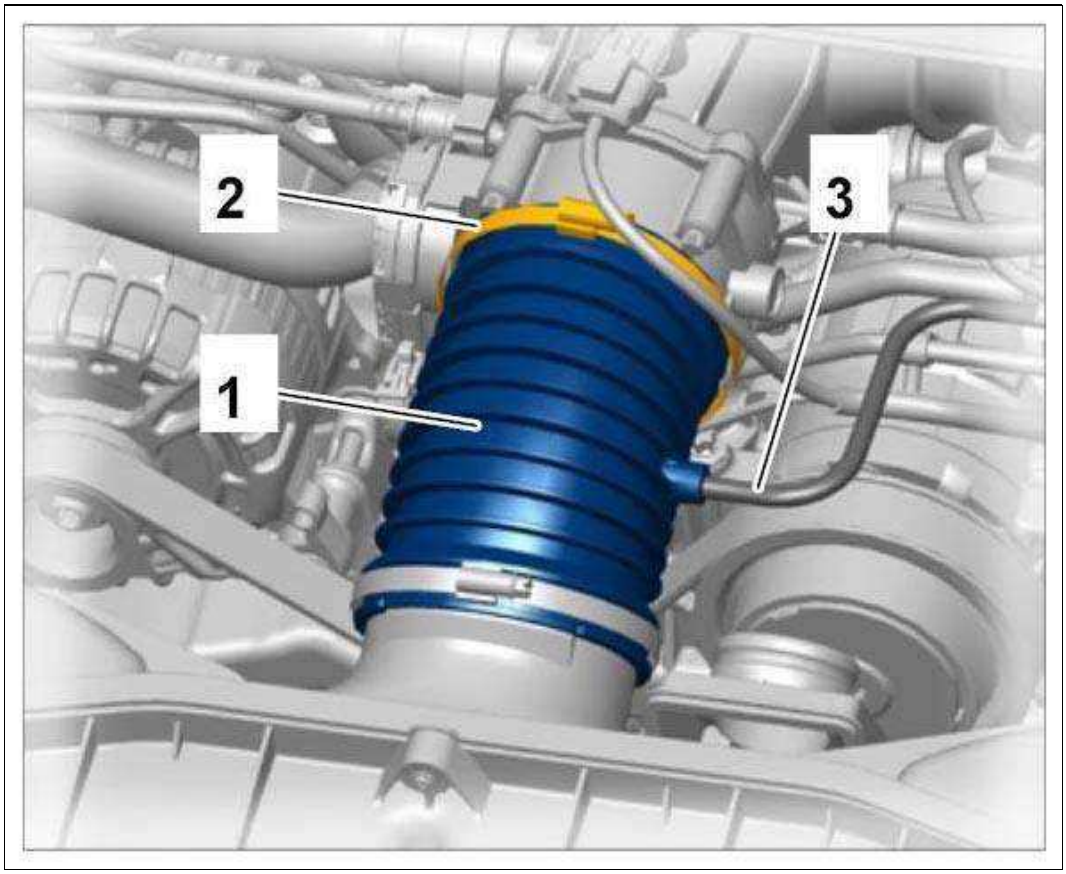

Courtesy of PORSCHE CARS NORTH AMERICA, INC.

2. Loosen screw-type clamps **-3-** on the connections between the air cleaner housing **-1-** and air guide **-2-** .

Fig 2: Securing Air Cleaner Housing To Air Guide Screw-Type Clamp (Right)

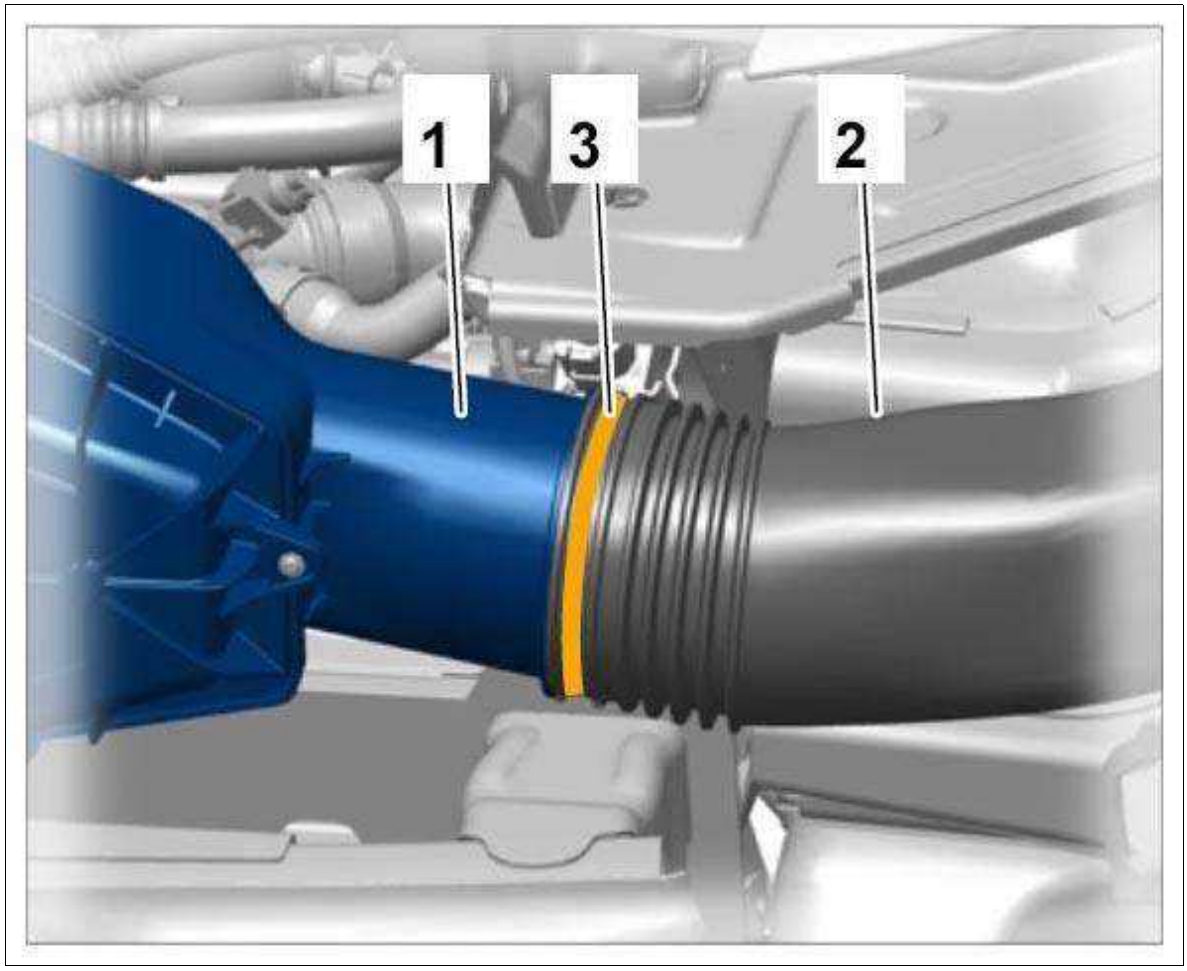

Courtesy of PORSCHE CARS NORTH AMERICA, INC.

3. Unscrew screws **-1-** for air cleaner housing **-2-** on the cross member **-3-** .

Fig 3: Identifying Air Cleaner Housing On Cross Member Screws

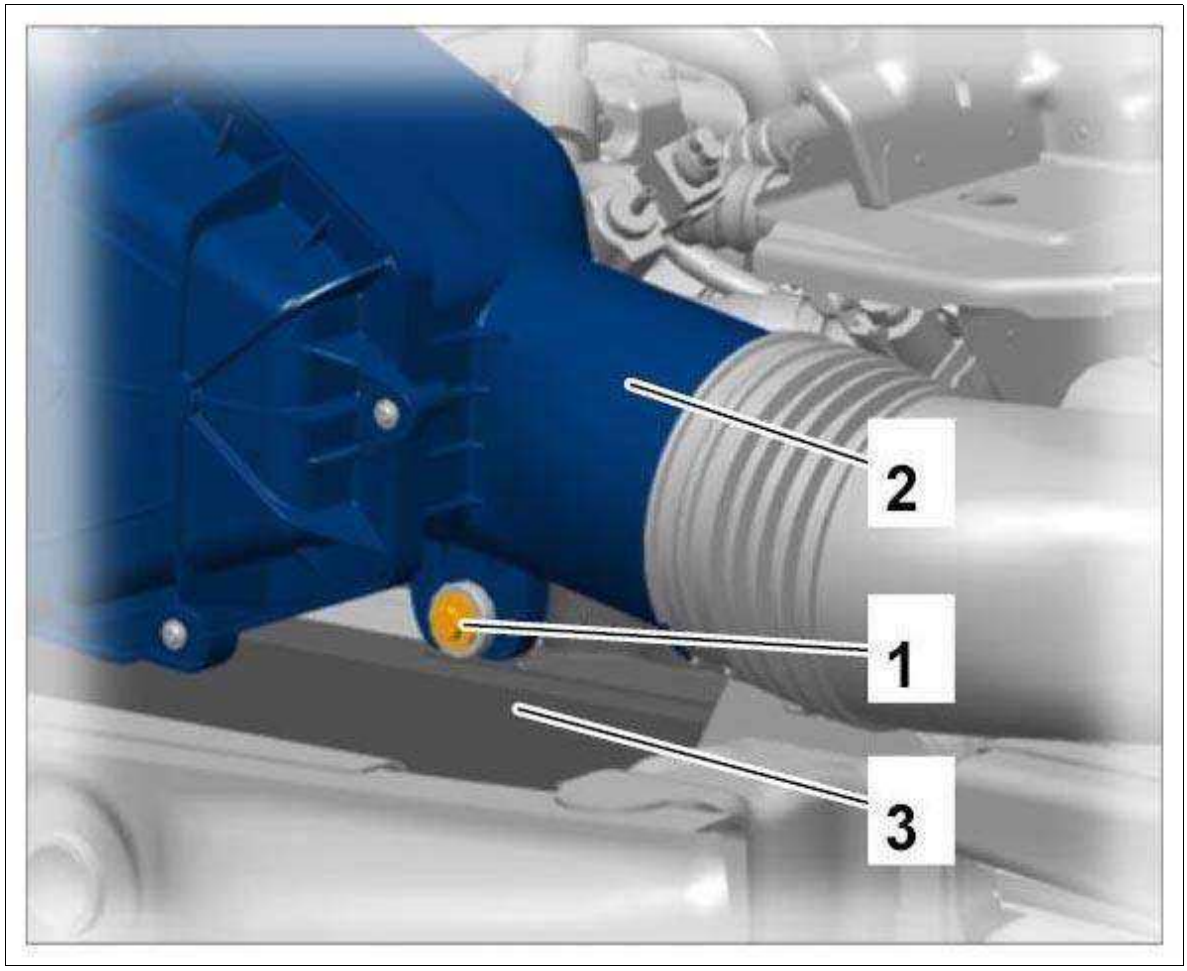

Courtesy of PORSCHE CARS NORTH AMERICA, INC.

4. Remove air cleaner housing.

WM 242519 REMOVING AND INSTALLING AIR CLEANER HOUSING (GT3 RS) > INSTALLING AIR CLEANER HOUSING

1. Fit air cleaner housing **-1-** on the air guides **-2-** and pre-fix using screw-type clamps **-3-** .

Fig 1: Securing Air Cleaner Housing To Air Guide Screw-Type Clamp (Right)

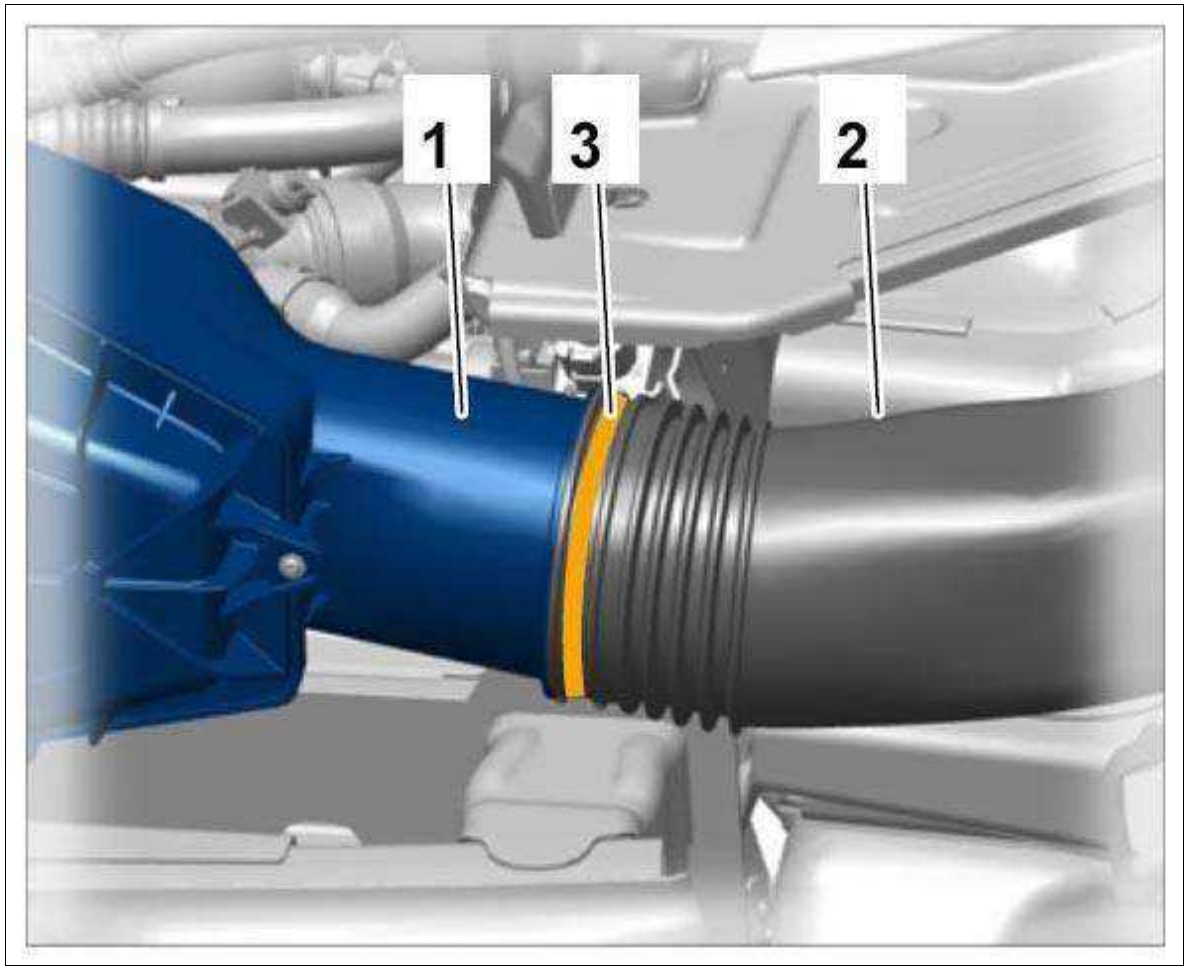

Courtesy of PORSCHE CARS NORTH AMERICA, INC.

2. Fit rubber shroud **-1-** on the throttle housing using a screw-type clamp **-2-** .

    1. 2.1. Connect vacuum hose **-3-** .

Fig 2: Identifying Rubber Shroud On Air Cleaner Housing

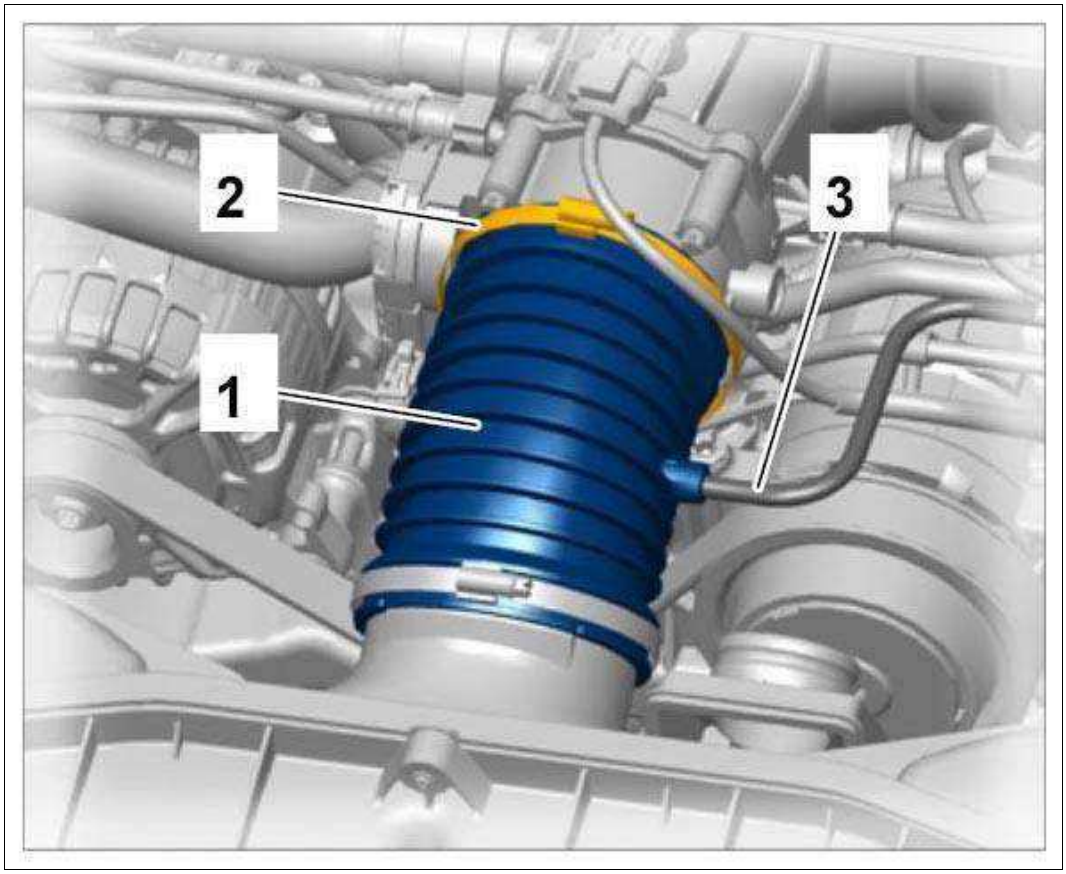

Courtesy of PORSCHE CARS NORTH AMERICA, INC.

3. Secure air cleaner housing **-2-** with screws **-1-** to the cross member **-3-** .

   Tightening torque 7 Nm (5 ftlb.)

Fig 3: Securing Air Cleaner Housing To Cross Member Screw (Right)

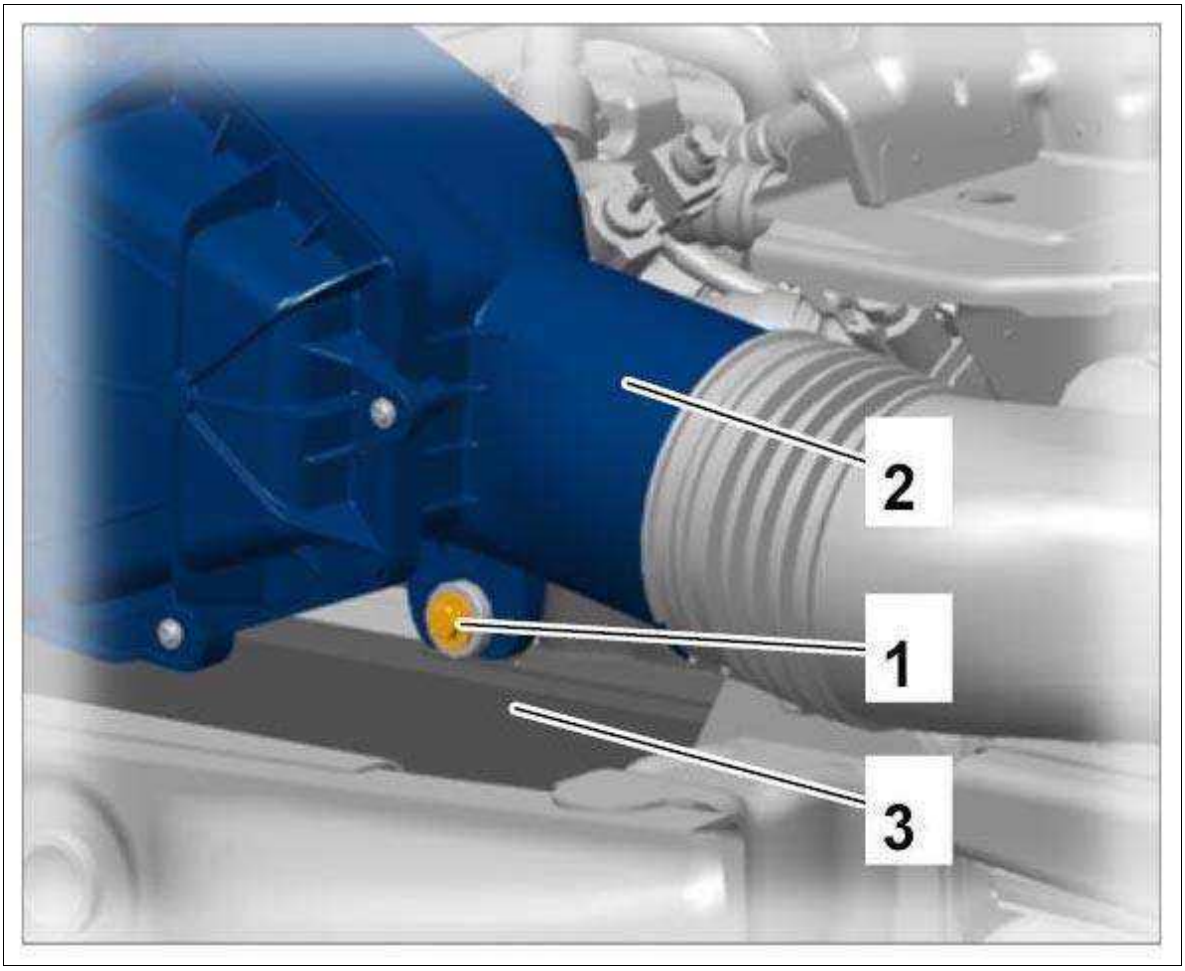

Courtesy of PORSCHE CARS NORTH AMERICA, INC.

4. Tighten screw-type clamps.

    1. 4.1. Screw-type clamps securing air cleaner housing to air guide: **Tightening torque 3 Nm (2 ftlb.)**
    2. 4.2. Screw-type clamp securing rubber shroud to throttle housing: **Tightening torque 3 Nm (2 ftlb.)**

WM 242519 REMOVING AND INSTALLING AIR CLEANER HOUSING (GT3 RS) > SUBSEQUENT WORK

1. Install rear apron.

    → Installing Rear Apron

WM 243019 REMOVING AND INSTALLING FUEL COLLECTION PIPE WITH FUEL INJECTORS (EXCEPT CARRERA "EDITION", CARRERA CABRIOLET "EDITION", CARRERA 4 "EDITION", CARRERA 4 CABRIOLET "EDITION", GT3, GT3 RS) > TOOLS

Designation	Type	Number	Description

repair kit	VW tool	T10133	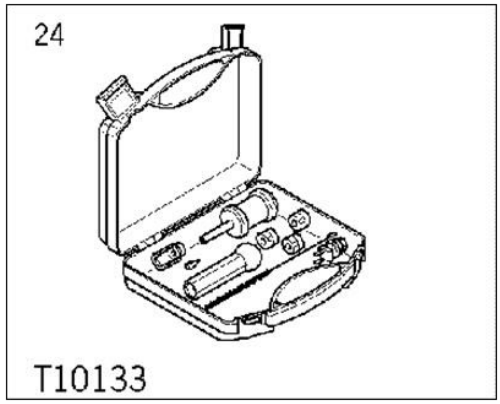
puller arms for T10133/1 - kit	VW tool	T10133/30	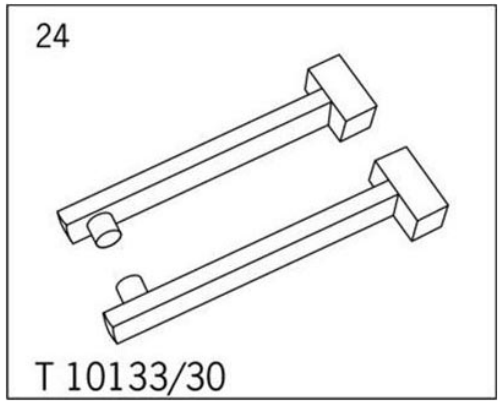

WM 243019 REMOVING AND INSTALLING FUEL COLLECTION PIPE WITH FUEL INJECTORS (EXCEPT CARRERA "EDITION", CARRERA CABRIOLET "EDITION", CARRERA 4 "EDITION", CARRERA 4 CABRIOLET "EDITION", GT3, GT3 RS) > TECHNICAL VALUES

Location	Description	Type	Basic value	Tolerance 1	Tolerance 2
Union nut on connecting line for cylinder 1-3 and 4-6	M14 x 1.5 - coat thread and cone with OKS 1710	Tightening torque	20 Nm (15 ftlb.)		
Fuel collection pipes to cylinder head	External Torx screw, M6 x 30	Tightening torque	13 Nm (9.5 ftlb.)		
Holding clamp securing connecting line to sheetmetal bracket	External Torx screw, M6 x 12	Tightening torque	10 Nm (7.5 ftlb.)		

WM 243019 REMOVING AND INSTALLING FUEL COLLECTION PIPE WITH FUEL INJECTORS (EXCEPT CARRERA "EDITION", CARRERA CABRIOLET "EDITION", CARRERA 4 "EDITION", CARRERA 4 CABRIOLET "EDITION", GT3, GT3 RS) > PRELIMINARY WORK

1. Read out engine control unit fault memory before getting started.

2. Relieve fuel pressure in the system.

    1. 2.1. Remove cover on the fuse carrier in the passenger compartment at the front left.

    2. 2.2. In **row B -1-** , pull out the fuse **-2-** for the fuel pump.

    3. 2.3. Start the engine, wait until it stops and then re-insert the fuse.

    Fig 1: Identifying Fuse Carrier In Passenger Compartment (Front Left)

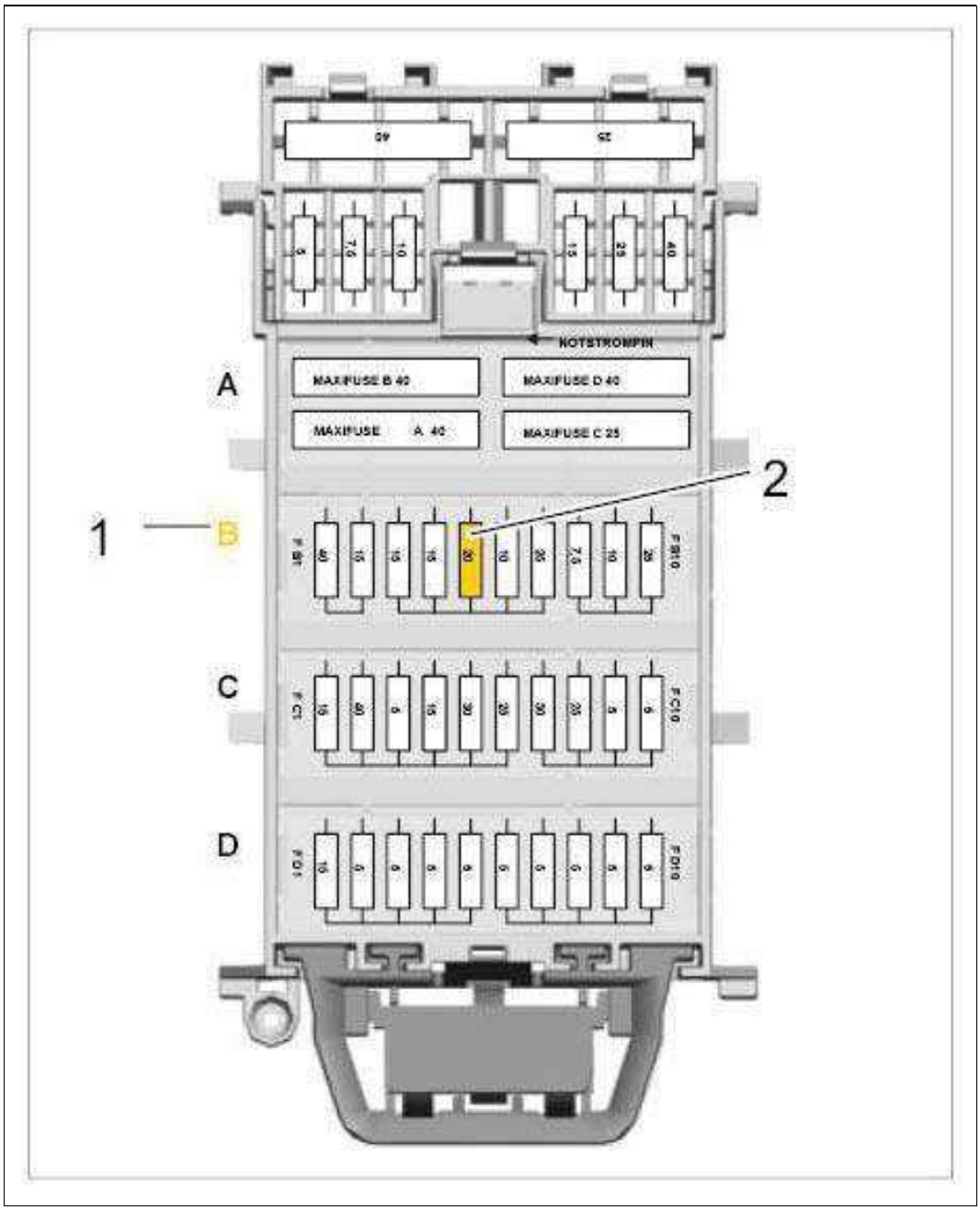

Courtesy of PORSCHE CARS NORTH AMERICA, INC.

3. Switch off ignition and all loads.

4. Disconnect the battery.

5. Remove resonance tube.

   → 247419 REMOVING AND INSTALLING RESONANCE TUBE .

6. Remove intake-air distributor.

   → 244619 REMOVING AND INSTALLING INTAKE-AIR DISTRIBUTOR .

   1. 6.1. Cover intake port openings with adhesive tape or a cloth.

1. Read out engine control unit fault memory before getting started.
2. Relieve fuel pressure in the system.
   1. 2.1. Expose fuse carrier in the rear.
   2. 2.2. In **row B** , pull out the fuse for the fuel pump.
   3. 2.3. Start the engine, wait until it stops and then re-insert the fuse.
3. Switch off ignition and all electrical loads.
4. Disconnect the battery.
5. Remove resonance tube. → 247419 REMOVING AND INSTALLING RESONANCE TUBE
6. Remove intake-air distributor. → 244619 REMOVING AND INSTALLING INTAKE-AIR DISTRIBUTOR
   1. 6.1. Cover intake port openings with adhesive tape or a cloth.

WM 243019 REMOVING AND INSTALLING FUEL COLLECTION PIPE WITH FUEL INJECTORS (EXCEPT CARRERA "EDITION", CARRERA CABRIOLET "EDITION", CARRERA 4 "EDITION", CARRERA 4 CABRIOLET "EDITION", GT3, GT3 RS) > INFORMATION > COMPONENT OVERVIEW

⚠ *CAUTION: Dirt on injection system components (intake manifold injection and direct fuel injection system)*

- *Material damage*
- *Rough-running engine*
- *Bad exhaust emissions*

→ Thoroughly clean connection points and adjacent areas before loosening them. If the engine is very dirty, wash it before starting disassembly work.

→ Lay removed parts on a clean surface and cover them. Only use a clean, lint-free cloth.

→ Carefully cover components or seal them if repair work will not be carried out immediately. Place rubber caps on connections. Seal intake openings with film or adhesive tape.

→ Only install clean parts. Do not take spare parts out of the packaging until just before installation.

→ Never use compressed air when the system is open. Do not move the vehicle.

Information

- Always perform a leak test in the high-pressure area after opening the fuel system.
- This is particularly important if components are disassembled and replaced.
- The threaded connections of the fuel lines must be coated with OKS 1710 lubricant (Part No. 000.043.303.27) before being screwed back on again.
- Always allow a drying time of 60 minutes for the lubricant!
- Blow residual fuel out of the lines and high-pressure pump (into a fuel-resistant container or cloth) using compressed air before installation.
- The tightening specifications must be strictly observed.

WM 243019 REMOVING AND INSTALLING FUEL COLLECTION PIPE WITH FUEL INJECTORS (EXCEPT CARRERA "EDITION", CARRERA CABRIOLET "EDITION", CARRERA 4 "EDITION", CARRERA 4 CABRIOLET "EDITION", GT3, GT3 RS) > INFORMATION > COMPONENT OVERVIEW > OVERVIEW OF FUEL SYSTEM IN ENGINE COMPARTMENT

Fig 1: Overview Of Fuel System In Engine Compartment

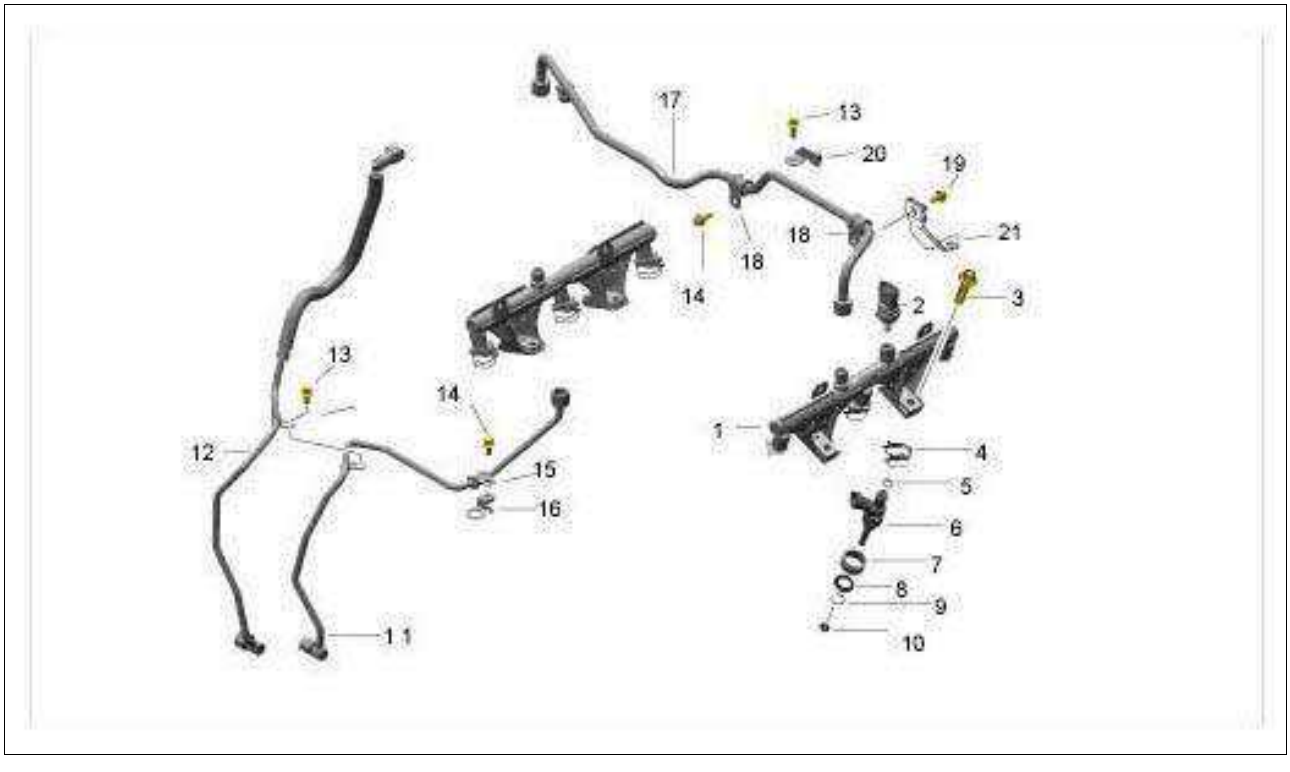

Courtesy of PORSCHE CARS NORTH AMERICA, INC.

1. Fuel collection pipe
2. Pressure sensor

3. External Torx screw, M6 x 30
4. Injector spring clamp - always replace
5. O-ring, 7.52 x 2.8 - always replace
6. Fuel injector (high-pressure injector)
7. Bellows - always replace
8. Spacer ring
9. Circlip - always replace
10. Teflon sealing ring, 6.3 x 2.8 - always replace
11. High-pressure line from pump to connecting line
12. Low-pressure line to pump
13. External Torx screw, M6 x 16
14. External Torx screw, M6 x 12
15. Hose clamp, 8 x 15
16. High-pressure line bracket
17. High-pressure connecting line
18. Hose clamp, 12 x 15
19. External Torx screw, M6 x 16
20. Centre connecting line bracket
21. Connecting line bracket

WM 243019 REMOVING AND INSTALLING FUEL COLLECTION PIPE WITH FUEL INJECTORS (EXCEPT CARRERA "EDITION", CARRERA CABRIOLET "EDITION", CARRERA 4 "EDITION", CARRERA 4 CABRIOLET "EDITION", GT3, GT3 RS) > REMOVING FUEL COLLECTION PIPE

WARNING: Highly inflammable or explosive materials

- *Danger of fire or explosion*

→ Avoid contact with hot parts or sources of ignition.

→ Use suction to remove ignitable vapors.

→ Attach warning sign in a clearly visible position.

1. **Attach or set up a warning sign -1- in a clearly visible position on the vehicle.**

Fig 1: Caution For Warning Sign When Working On Fuel System

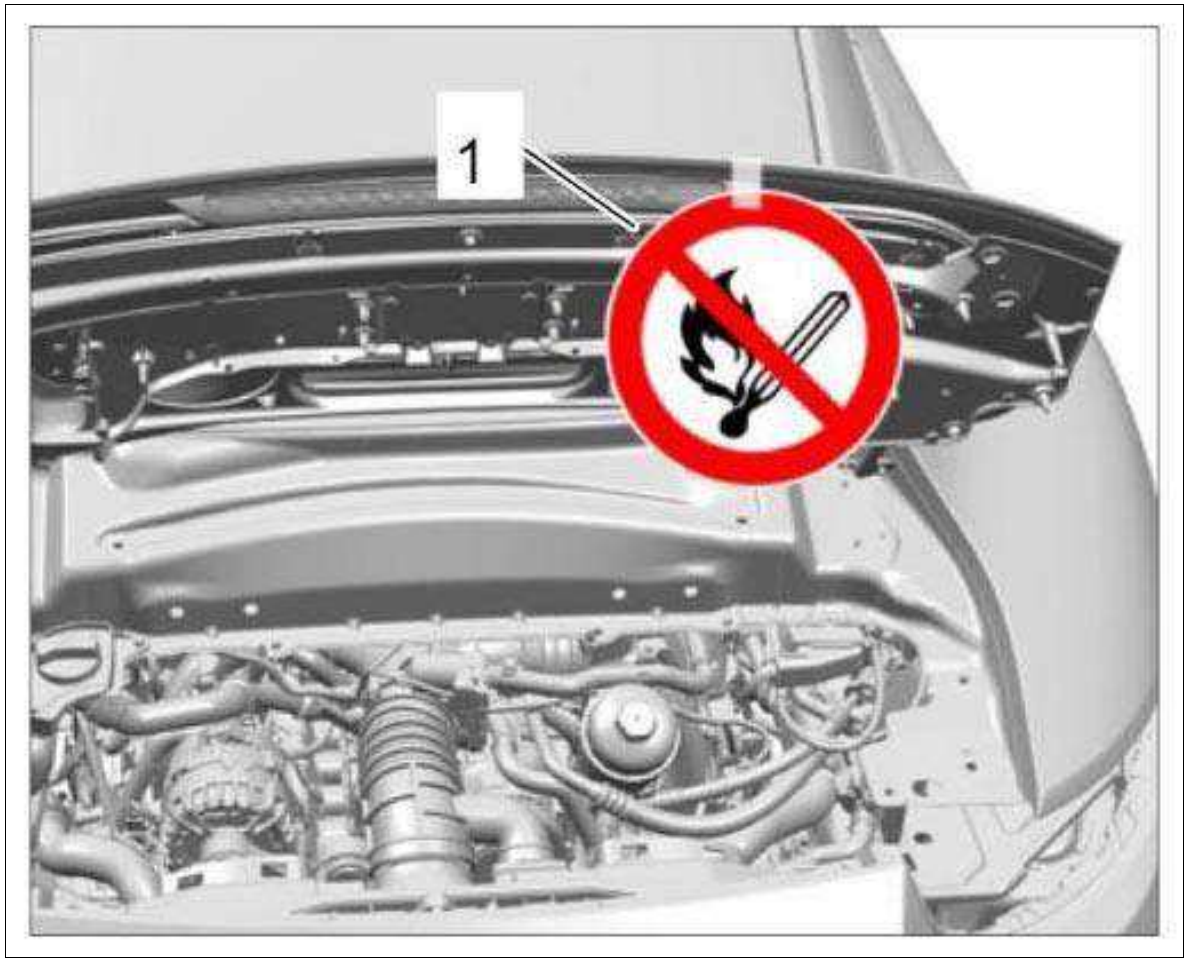

Courtesy of PORSCHE CARS NORTH AMERICA, INC.

2. Disconnect fuel connection line.

   → 249019 REMOVING AND INSTALLING FUEL CONNECTION LINE (HIGH-PRESSURE SIDE) .

   1. 2.1. Cover intake ports on the cylinder head and place a clean, lint-free cloth under the fuel collection pipe and high-pressure connecting line.

      Soak up any emerging fuel with a cloth!

3. Remove fuel collection pipe **-2-** .

   1. 3.1. Unscrew four screws **-1-** .

Fig 2: Identifying Screws On Fuel Collection Pipe

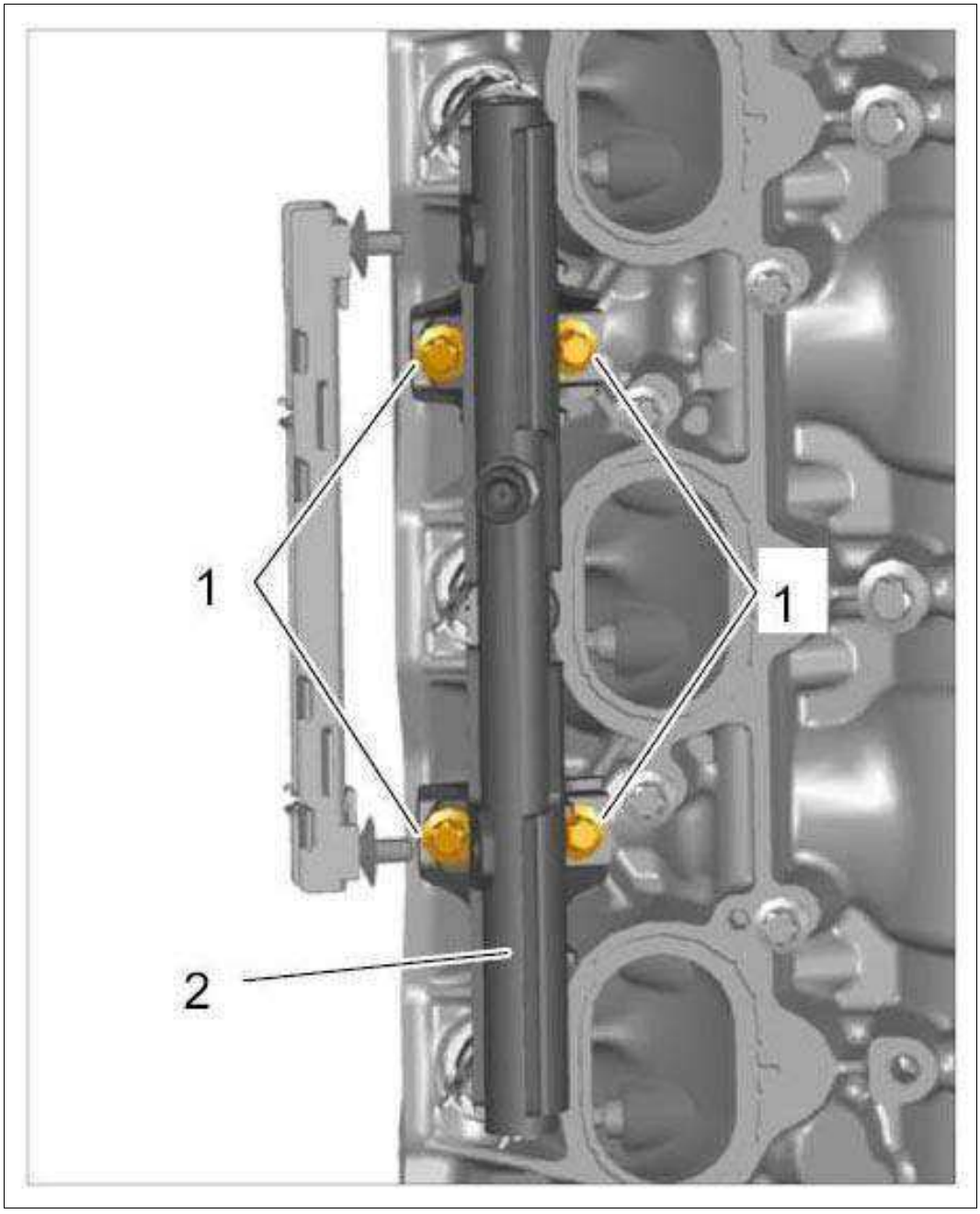

Courtesy of PORSCHE CARS NORTH AMERICA, INC.

Information

1. When removing and installing the fuel injectors, the following components must always be replaced to guarantee function and leak tightness.

2. O-ring, spring clamp, bellows and Teflon sealing ring.

4. Pull off spring clamps **-1-** on the fuel injectors using a pair of small flat-nosed pliers.

1. 4.1. If this is not possible because they are inaccessible, pull out fuel collection pipe using the fuel injectors.

2. 4.2. If this is not possible because the fuel injectors are stuck, spray valve seats with

special solution Caramba and leave it to take effect.

3. 4.3. Carefully move the fuel collection pipe back and forth. Then lift up the fuel collection pipe using a plastic or wooden wedge (shop made).
4. 4.4. Disconnect cable plugs for fuel injectors and lift the module with the valves out of the engine compartment.
5. 4.5. Remove spring clamps and pull fuel injectors vertically out of the pipe adapters.
6. 4.6. Always replace the spring clamps.

Fig 3: Locating Fuel Injector Spring Clamp

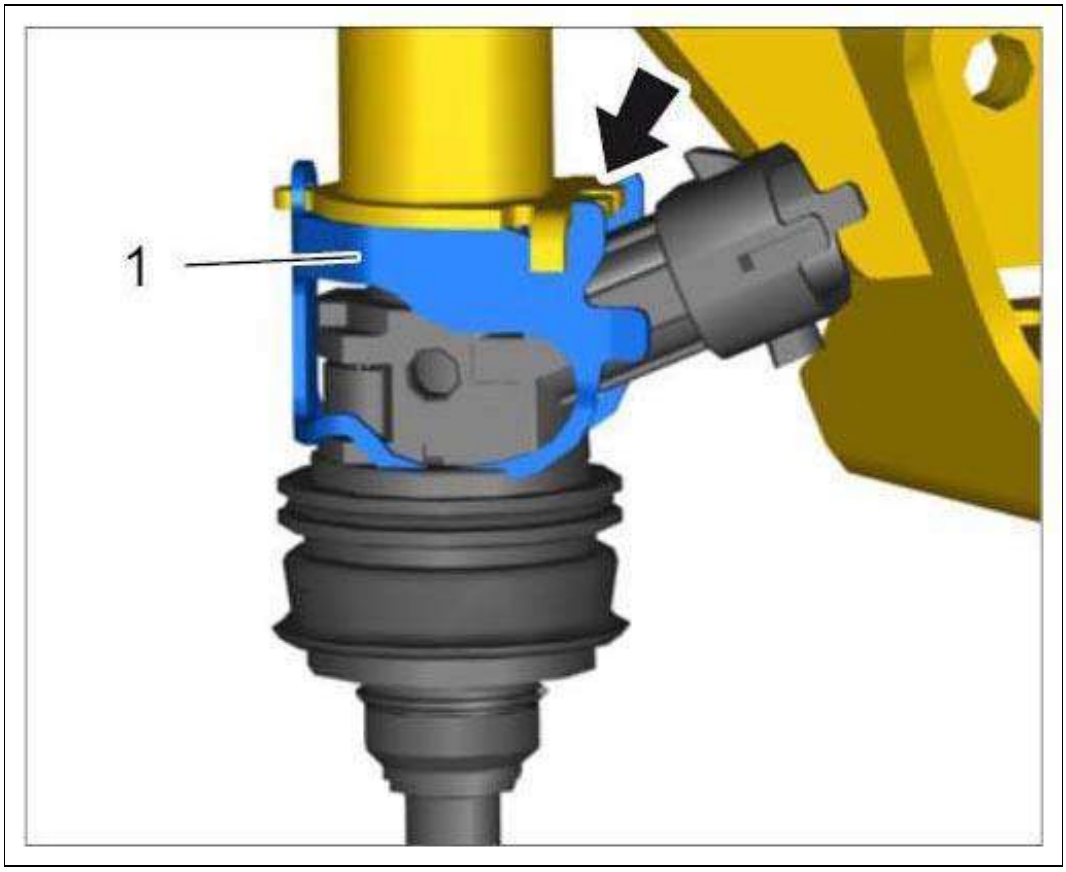

Courtesy of PORSCHE CARS NORTH AMERICA, INC.

5. One or more fuel injectors **-1-** can remain in the cylinder head, depending on the age of the vehicle. The spring clamps become loose and fall into the engine compartment when the fuel collection pipe is pulled off.

    1. 5.1. Remove them immediately.

Fig 4: Identifying Fuel Injectors In Cylinder Head

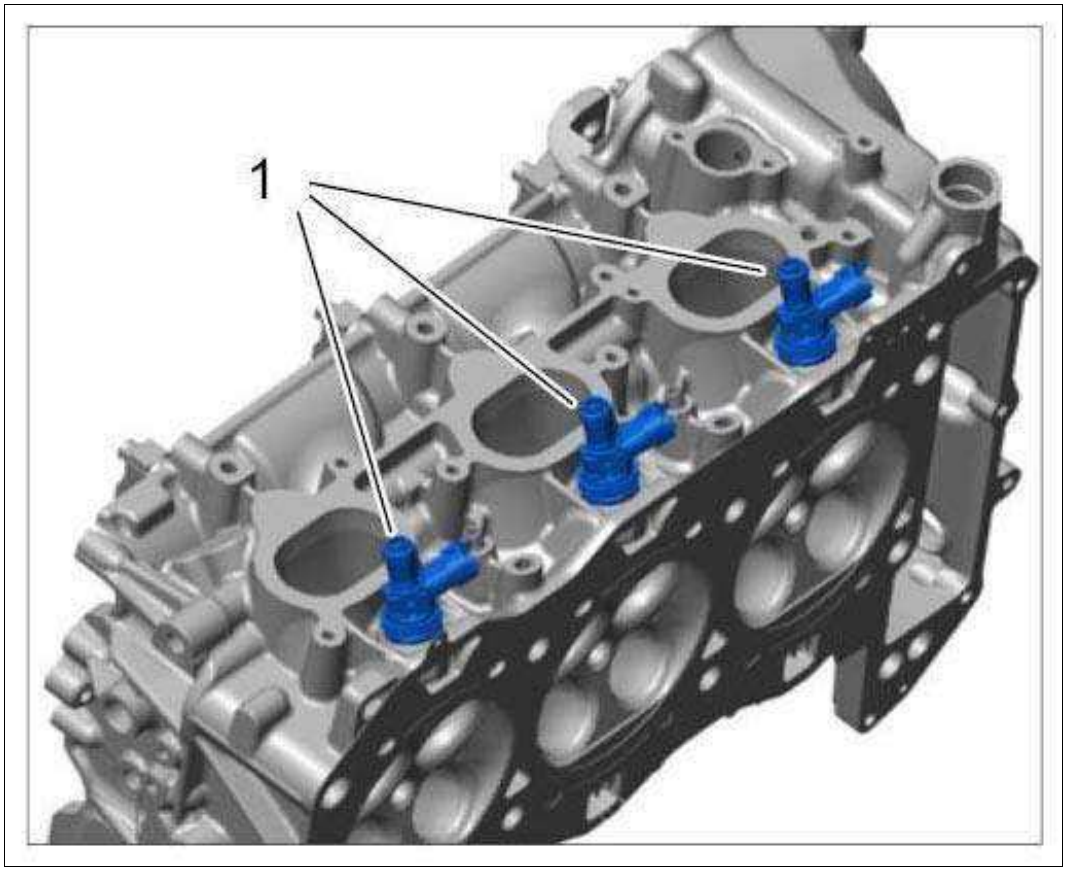

Courtesy of PORSCHE CARS NORTH AMERICA, INC.

6. Pull fuel injector out of its seat in the cylinder head. Use special tool **repair kit T10133** with **puller arms for T10133/1 - kit T10133/30** to do this.

    1. 6.1. Puller arms T10133/30 **-4-** must be inserted into the puller.

        1. Puller
        2. O-ring
        3. Original puller arms
        4. Puller arms T10133/30 for Porsche fuel injectors

Fig 5: Identifying Fuel Injector Holder (Puller Arms)

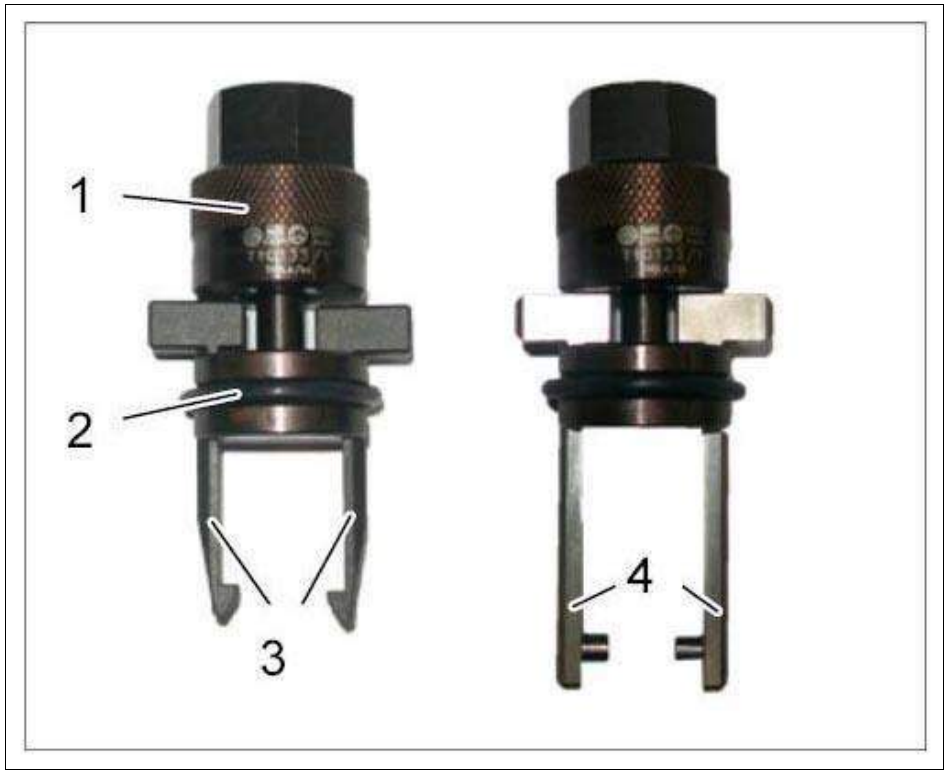

Courtesy of PORSCHE CARS NORTH AMERICA, INC.

2. 6.2. Free fuel injector using a twisting motion.

3. 6.3. Position puller arms **-arrow-** on the fuel injector **-1-** . Insert the lever arms into the cut-outs on the injector and lock them by screwing the hexagon nut clockwise.

Fig 6: Identifying Puller Arms On Fuel Injector

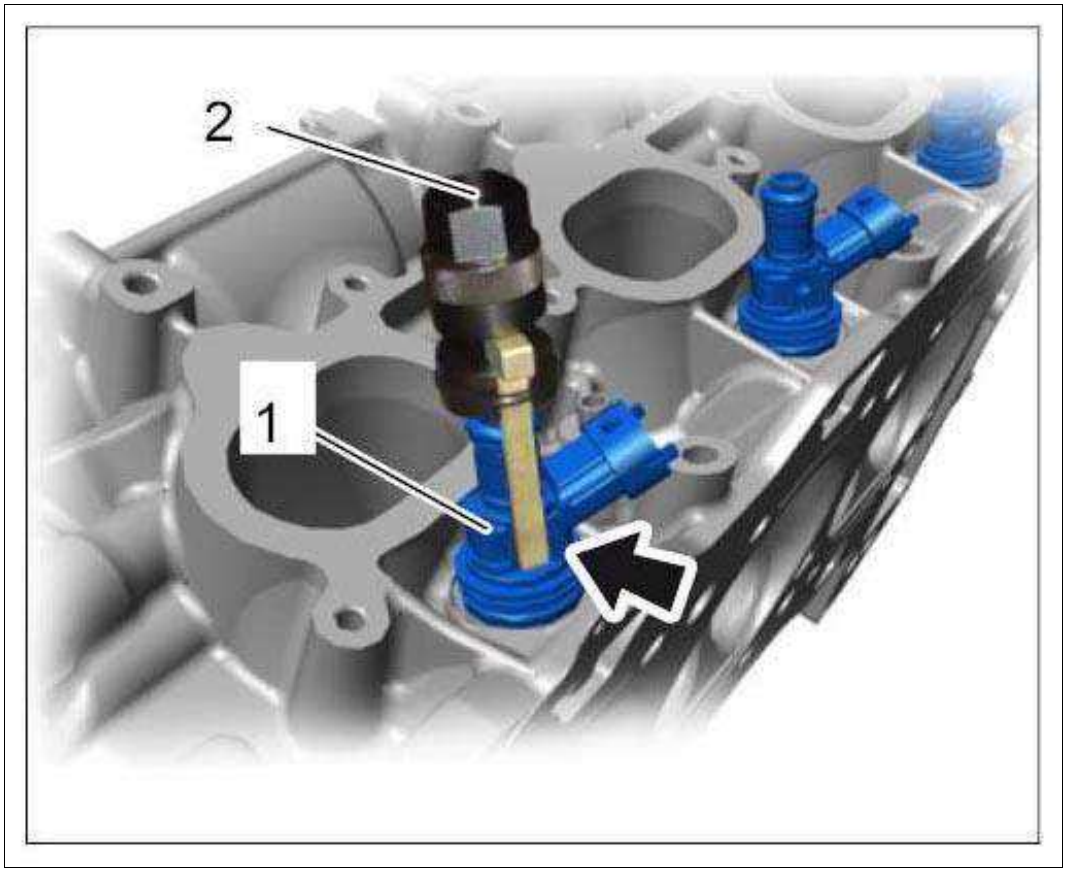

Courtesy of PORSCHE CARS NORTH AMERICA, INC.

4. 6.4. Screw slide hammer from the repair kit onto the hexagon nut. Press lever arms together and remove the injector by pulling up gently.

Fig 7: Pulling Fuel Injector

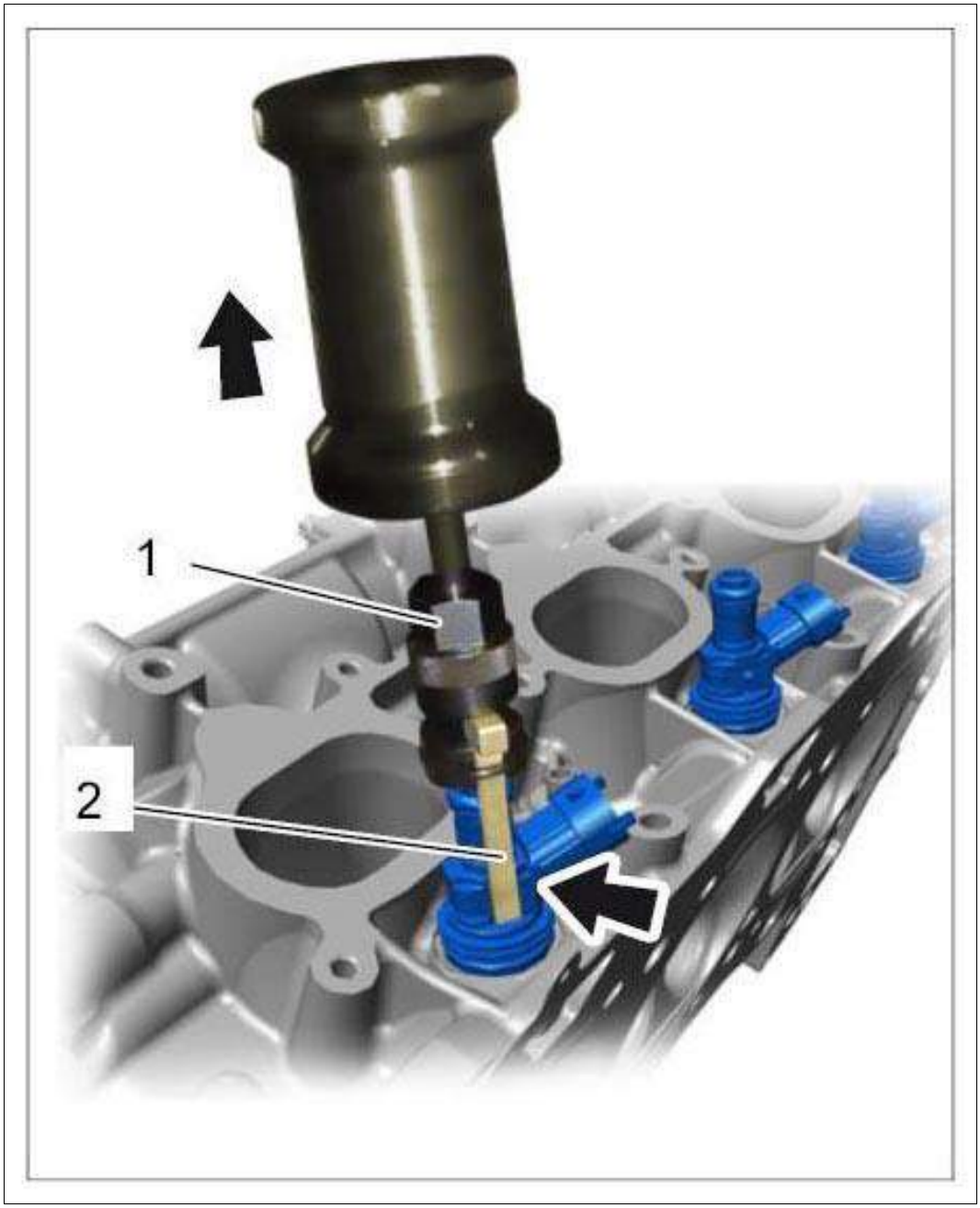

Courtesy of PORSCHE CARS NORTH AMERICA, INC.

5. 6.5. Illustration of tool on injector

    1. Slide hammer with pull rod
    2. Puller for locking lever arms

       arrow - Position of retaining bore for pulling lever arms
    3. Fuel injector (high-pressure injector)

Fig 8: Locating Special Tool On Fuel Injector

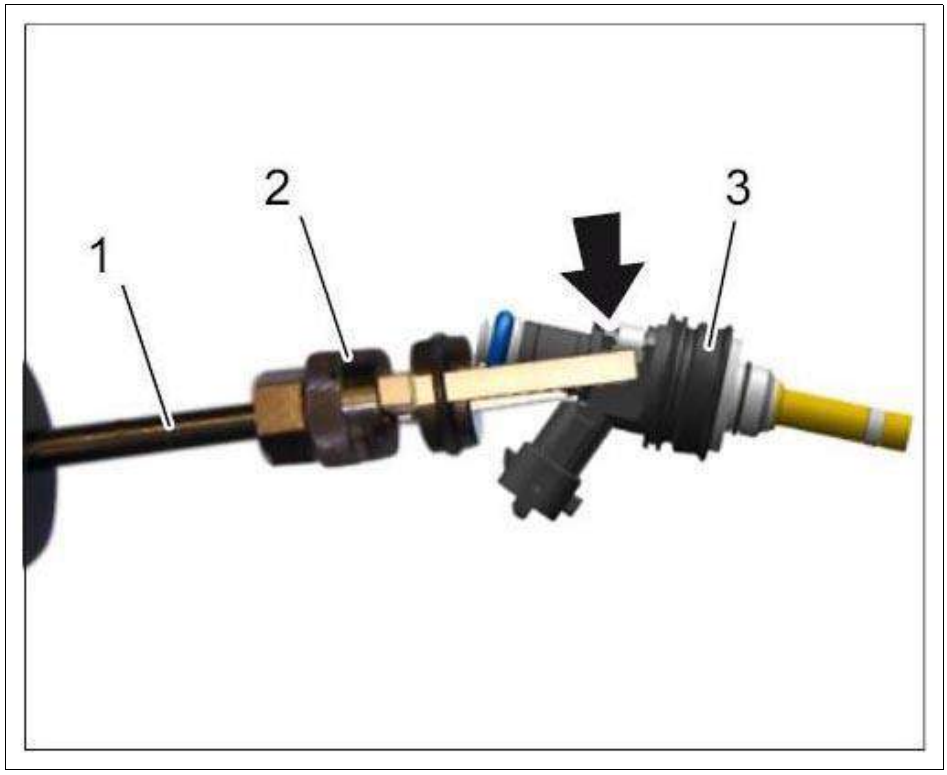

Courtesy of PORSCHE CARS NORTH AMERICA, INC.

7. Carefully clean fitting bores on cylinder head.
    1. 7.1. Remove loose parts using a powerful workshop vacuum cleaner.
    2. 7.2. Soak a small, clean and lint-free cloth in acetone or solvent naphtha and carefully clean the bores.
    3. 7.3. Use the cleaning brush from the tool set to remove any remaining dirt from the fitting bores.
8. Clean fuel collection pipe.
    1. 8.1. Clean connection piece for the fuel injectors with acetone or solvent naphtha.
9. Fuel injectors that are to be reinstalled must also be cleaned (see CLEANING FUEL INJECTORS).

    Information

    1. When the work is complete, check that all aids and foreign objects (e.g. cloths, tools) are removed from the engine compartment.
10. **Make sure there are no tools, foreign objects or aids in the engine compartment.**

WM 243019 REMOVING AND INSTALLING FUEL COLLECTION PIPE WITH FUEL INJECTORS (EXCEPT CARRERA "EDITION", CARRERA CABRIOLET "EDITION", CARRERA 4 "EDITION", CARRERA 4 CABRIOLET "EDITION", GT3, GT3 RS) >

CLEANING FUEL INJECTORS AND REPLACING WEARING PARTS > COMPONENT OVERVIEW

1. Spring clamp - always replace
2. O-ring - always replace and grease with VP 881
3. Fuel injector - follow cleaning instructions
4. Bellows - always replace
5. Spacer ring
6. Stainless steel circlip - always replace
7. Teflon sealing ring - always replace

Fig 1: Overview Of Fuel Injector Components

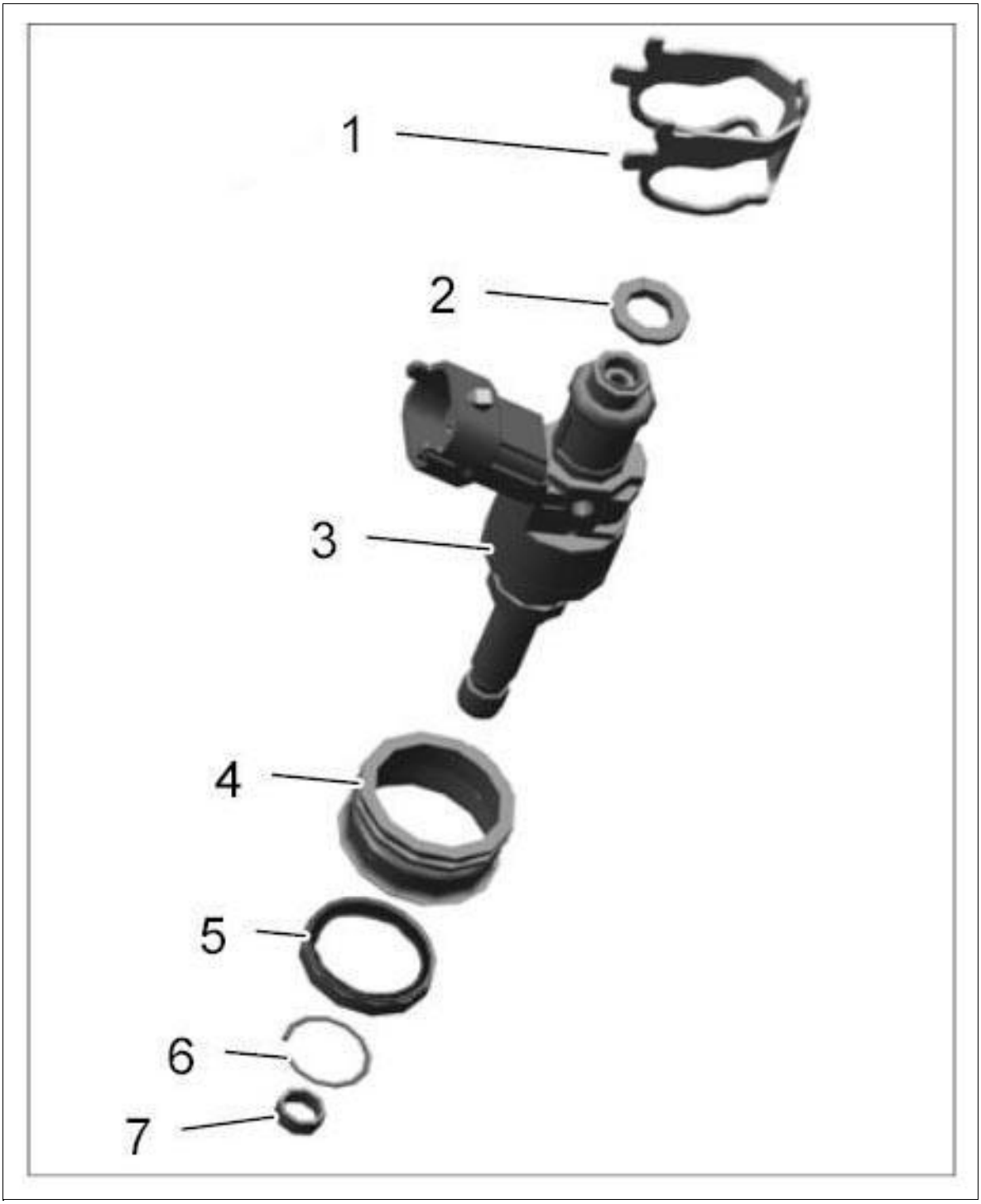

Courtesy of PORSCHE CARS NORTH AMERICA, INC.

Information

- When removing and installing the fuel injectors, the following components must always be replaced to guarantee function and leak tightness.
- O-ring, spring clamp, bellows and Teflon sealing ring.

1. Grip Teflon sealing ring **-1-** carefully using pointed-nose pliers **-2-** and pull it off. Do not

scratch valve body.

Fig 2: Removing Teflon Sealing Ring

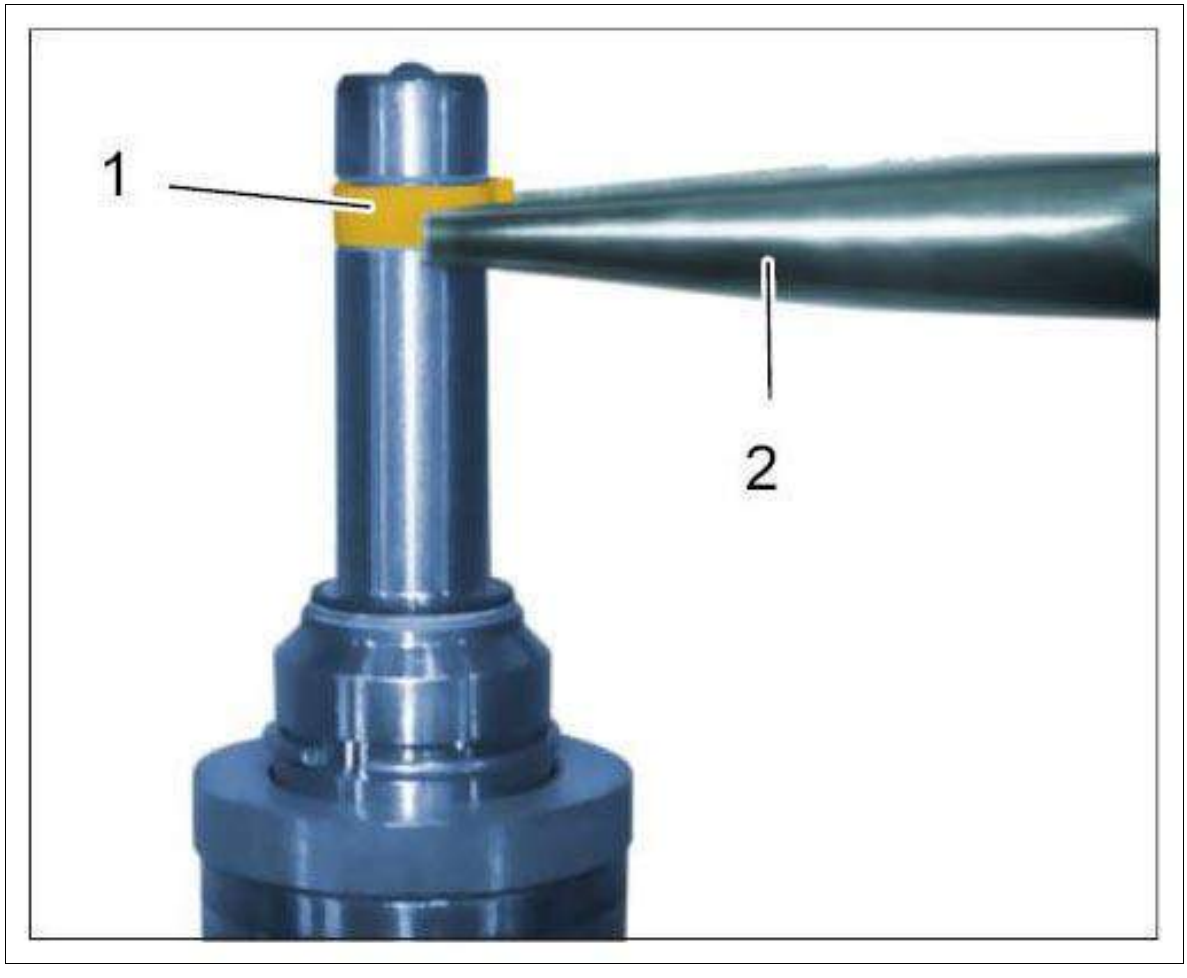

Courtesy of PORSCHE CARS NORTH AMERICA, INC.

1. 1.1. Scratched valves must be replaced.

2. When reinstalling the fuel injectors, they must be cleaned as described below:

> *WARNING: Caustic fluids*
>
> *1. Danger of chemical burns*

→ Avoid contact with caustic fluid.

→ Wear personal protective gear.

→ Ensure that there is good ventilation.

→ If you do come into contact, wash off immediately with plenty of warm water and contact a doctor if necessary.

Cleaning if lightly soiled:

3. Clean valve tips using a soft, lint-free cloth with acetone or solvent naphtha.

1. 3.1. Also clean sealing ring groove.

Cleaning if heavily soiled:

4. Clean valve tips in ultrasound bath. This allows even stubborn deposits (coking) to be removed.

    1. 4.1. Plunge just the metal insert into the cleaning fluid, holding it as vertically as possible. Cover electric connection with adhesive tape.

5. Replace O-ring and bellows.

6. Place new Teflon sealing ring **-2-** on the mounting cone **-1-** .

    1. 6.1. Slide sealing ring onto the cylinder of the mounting cone right to the end **-item 3-** using your thumb and index finger.

    Fig 3: Sliding Teflon Ring

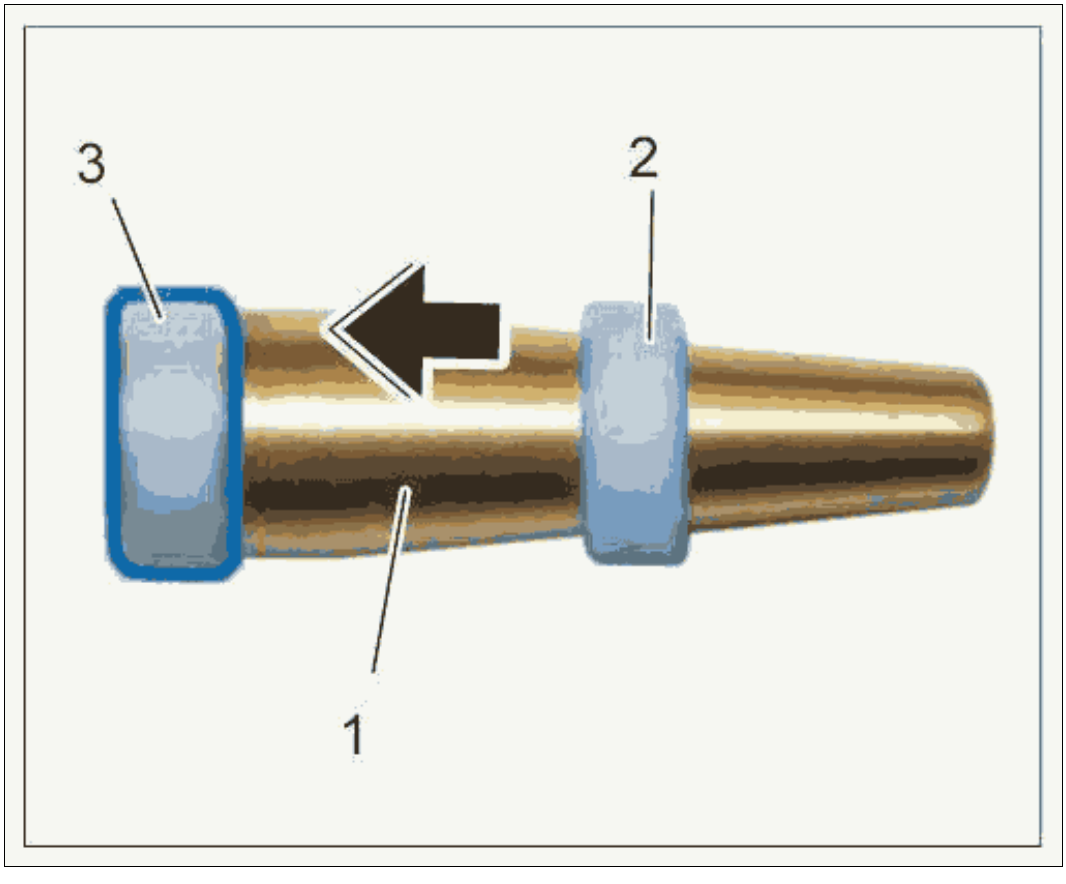

Courtesy of PORSCHE CARS NORTH AMERICA, INC.

7. Place mounting cone **-3-** with sealing ring **-1-** onto the fuel injector from the front.

    1. 7.1. Using assembly sleeve no. 8 **-2-** , push sealing ring over the injector tip as far as the groove **-arrow-** .

    2. 7.2. **The sealing ring is not yet seated correctly in the groove!**

Fig 4: Positioning Teflon Sealing Ring

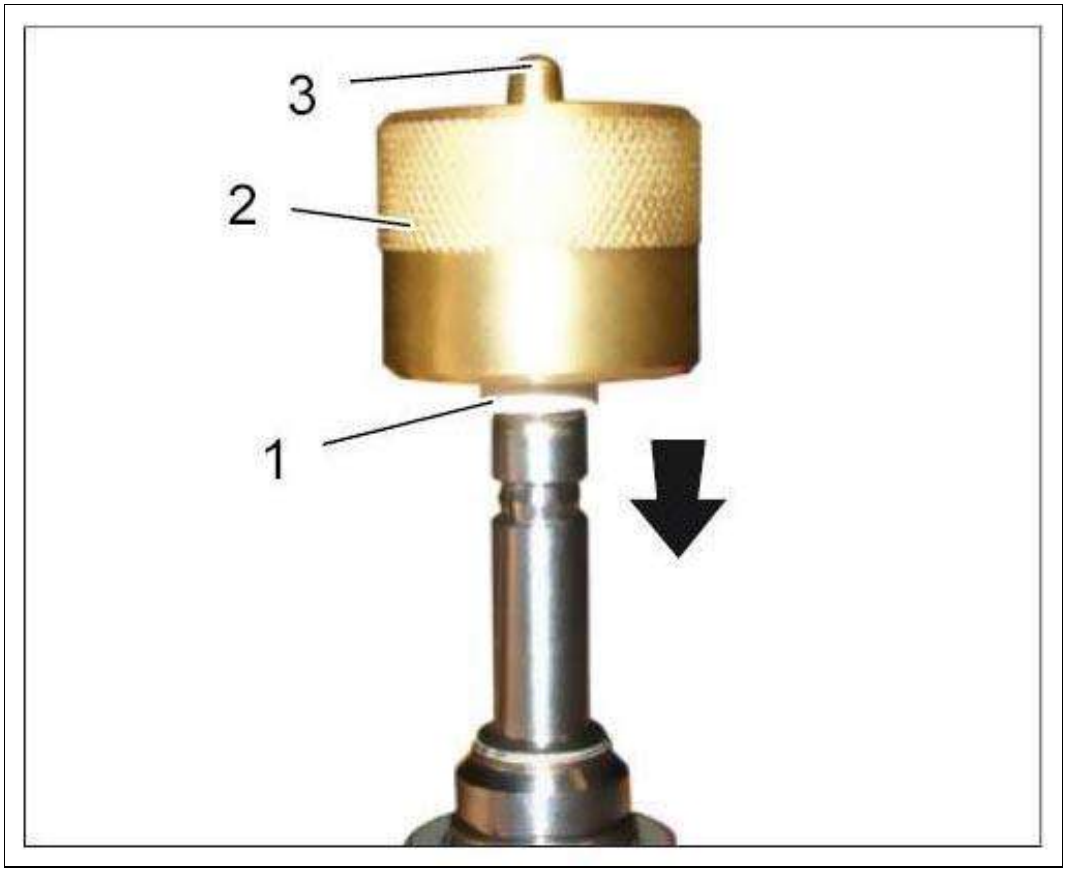

Courtesy of PORSCHE CARS NORTH AMERICA, INC.

8. Remove assembly sleeve and mounting cone. Align sealing ring in the ring groove.

    1. 8.1. Slide assembly sleeve **-2-** as far as the ring groove **-arrow-** and join the sealing ring **-1-** to the bore of the assembly sleeve by hand.

Fig 5: Sliding Sealing Ring Into Ring Groove

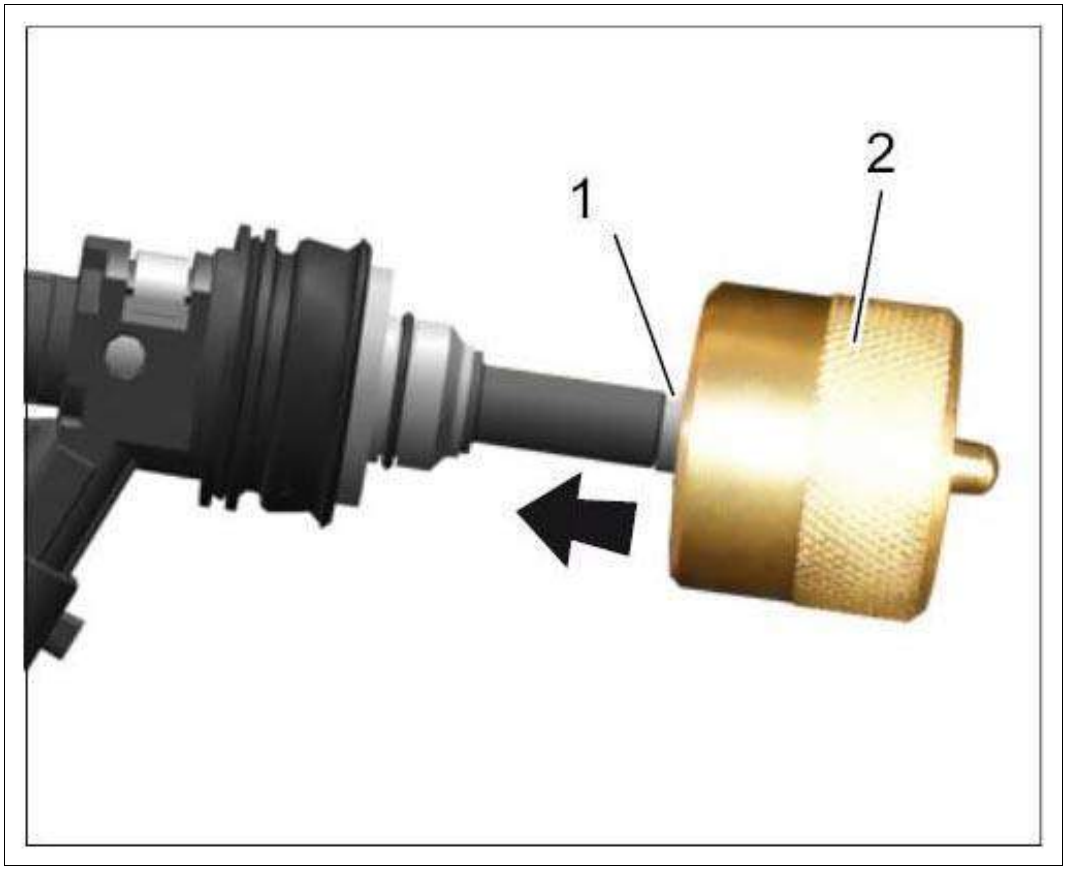

Courtesy of PORSCHE CARS NORTH AMERICA, INC.

9. **Calibrating Teflon sealing ring:**

1. 9.1. Slide assembly sleeve **-1-** as far as it will go over the sealing ring **-arrow-** .
2. 9.2. **Leave tool on the sealing ring for one minute.**
3. 9.3. Detach tool again.

   The Teflon sealing ring now has the correct installation dimension.

4. 9.4. The calibrating sleeve (transport protection on new injectors) **-2-** must remain fitted until the injector is installed.

Fig 6: Fitting Calibrating Sealing Ring Assembly Sleeve

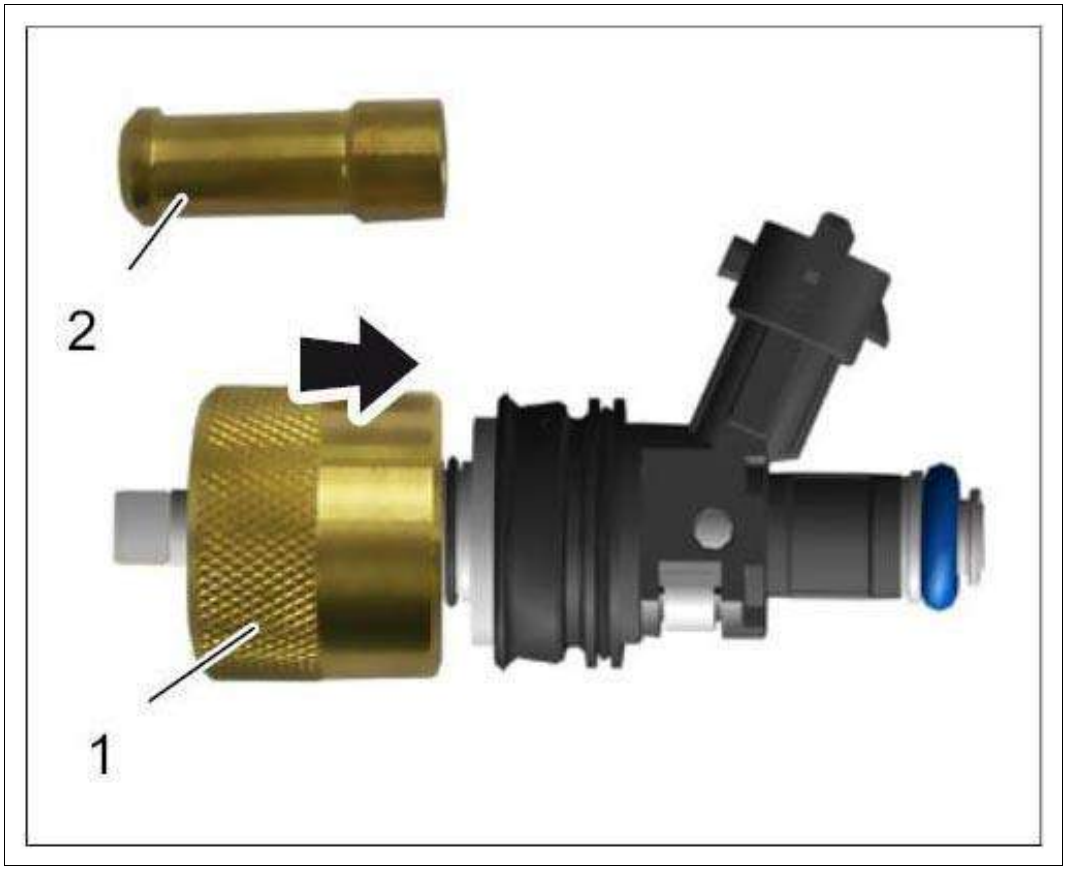

Courtesy of PORSCHE CARS NORTH AMERICA, INC.

Information

1. Grease new O-rings on the fuel injector with a light coating of assembly grease VP 881 (Part No. 000.043.207.35).

10. Install the fuel injector immediately, as the Teflon sealing ring will soon start to swell.

    1. 10.1. Do not pull off the calibrating sleeve until just before installation.

       The Teflon ring will otherwise lose its shape and will be compressed when installed. This would result in leaks.

    2. 10.2. Fit and align all three valves in the fuel collection pipe before re-installing the fuel collection pipe.

WM 243019 REMOVING AND INSTALLING FUEL COLLECTION PIPE WITH FUEL INJECTORS (EXCEPT CARRERA "EDITION", CARRERA CABRIOLET "EDITION", CARRERA 4 "EDITION", CARRERA 4 CABRIOLET "EDITION", GT3, GT3 RS) > INSTALLING FUEL COLLECTION PIPE > TIGHTENING SPECIFICATIONS FOR FUEL COLLECTION PIPE AND FUEL LINE

1. **Tightening specifications for fuel collection pipe:**

    1. 1.1. First fit screws **-1 and 2-** by hand (intake port side).

2. 1.2. Then tighten screws **-3 and 4-** by hand.

3. 1.3. Tighten all screws in the specified sequence. **Tightening torque 13 Nm (9.5 ftlb.)**

   Fig 1: Fuel Collection Pipe Screws Tightening Sequence

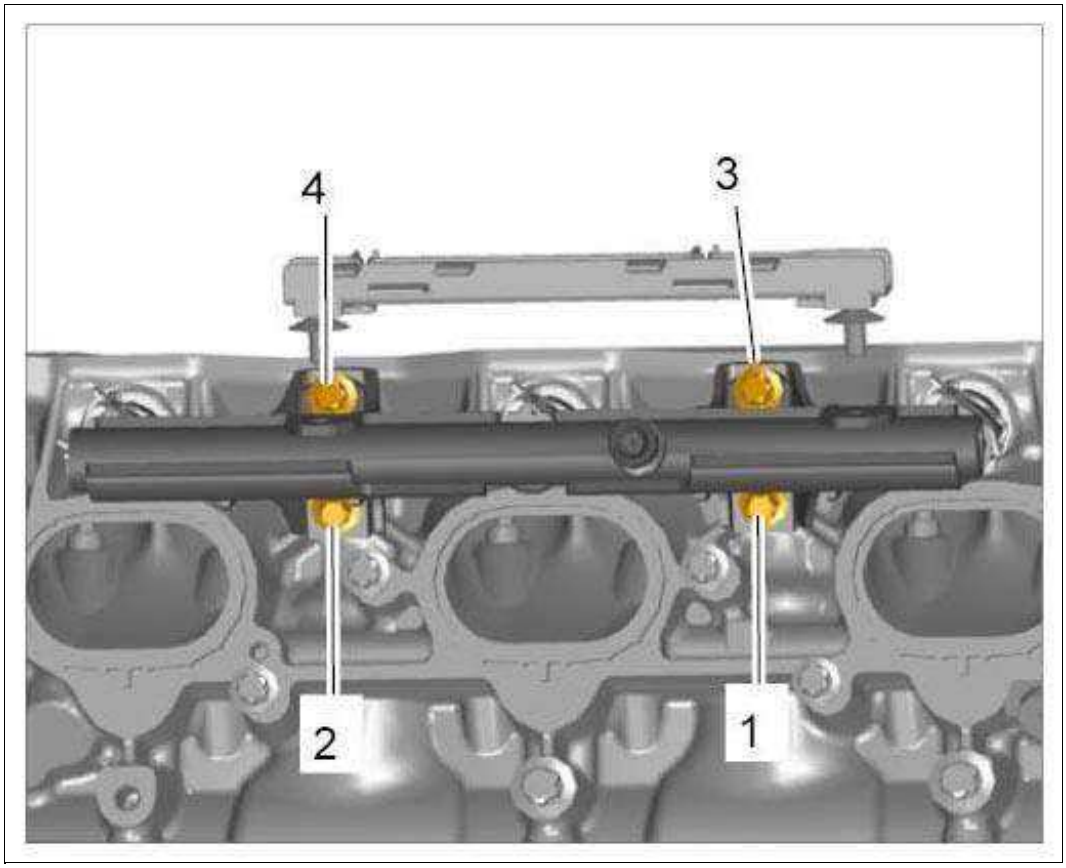

Courtesy of PORSCHE CARS NORTH AMERICA, INC.

2. **Tightening specifications for fuel connection line:**

   → 249019 REMOVING AND INSTALLING FUEL CONNECTION LINE (HIGH-PRESSURE SIDE) .

   1. 2.1. Coat all threaded connections with lubricant OKS 1710 (Part No. 000.043.303.27).

   2. 2.2. Fit union nuts by hand.

   3. 2.3. Fit and tighten holding clamps with M6 screws. **Tightening torque 10 Nm (7.5 ftlb.)**

   4. 2.4. Tighten union nuts. **Tightening torque 20 Nm (15 ftlb.)**

WM 243019 REMOVING AND INSTALLING FUEL COLLECTION PIPE WITH FUEL INJECTORS (EXCEPT CARRERA "EDITION", CARRERA CABRIOLET "EDITION", CARRERA 4 "EDITION", CARRERA 4 CABRIOLET "EDITION", GT3, GT3 RS) > INSTALLING FUEL COLLECTION PIPE > INSTALLING FUEL COLLECTION PIPE

1. Grease the three mounts for the fuel injectors on the fuel collection pipe with a light coating of assembly grease VP 881 (Part No. 000.043.207.35).

2. Position fuel injectors **-1-** in the fuel collection pipe **-2-** in order to fit the spring clamps.

   Only press the injector in as far as the upper edge **-arrow-** when doing this.

   1. 2.1. **Always press the injector vertically into the mount!**

      Fig 1: Positioning Fuel Injector For Spring Clamps

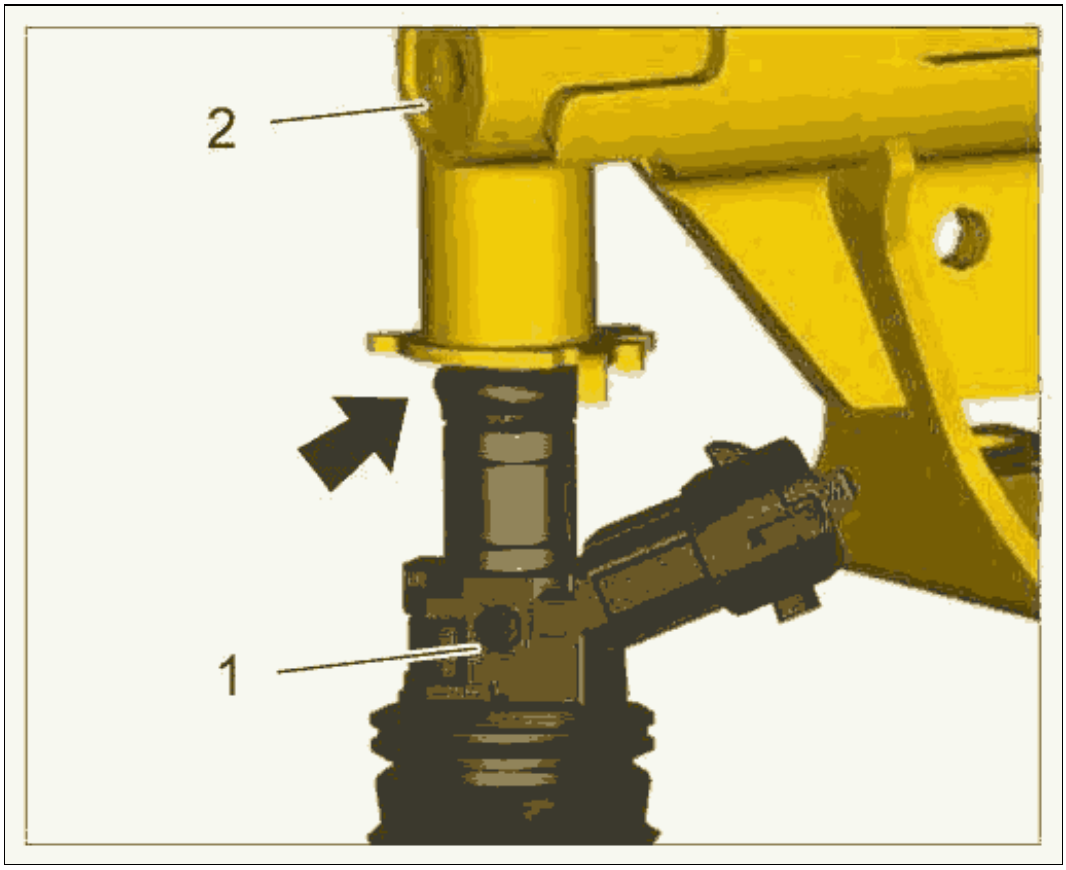

Courtesy of PORSCHE CARS NORTH AMERICA, INC.

3. Fit new spring clamps **-1-** .

   1. 3.1. Slide spring clamp over the mount and fuel injector from behind. The twist lock must be seated in the eye **-arrow-** .

   2. 3.2. Hook in spring clamp on either side of the fuel collection pipe mount.

4. Pull off dowel sleeves on the fuel injectors.

Fig 2: Locating Fuel Injector With Spring Clamp Installation Position

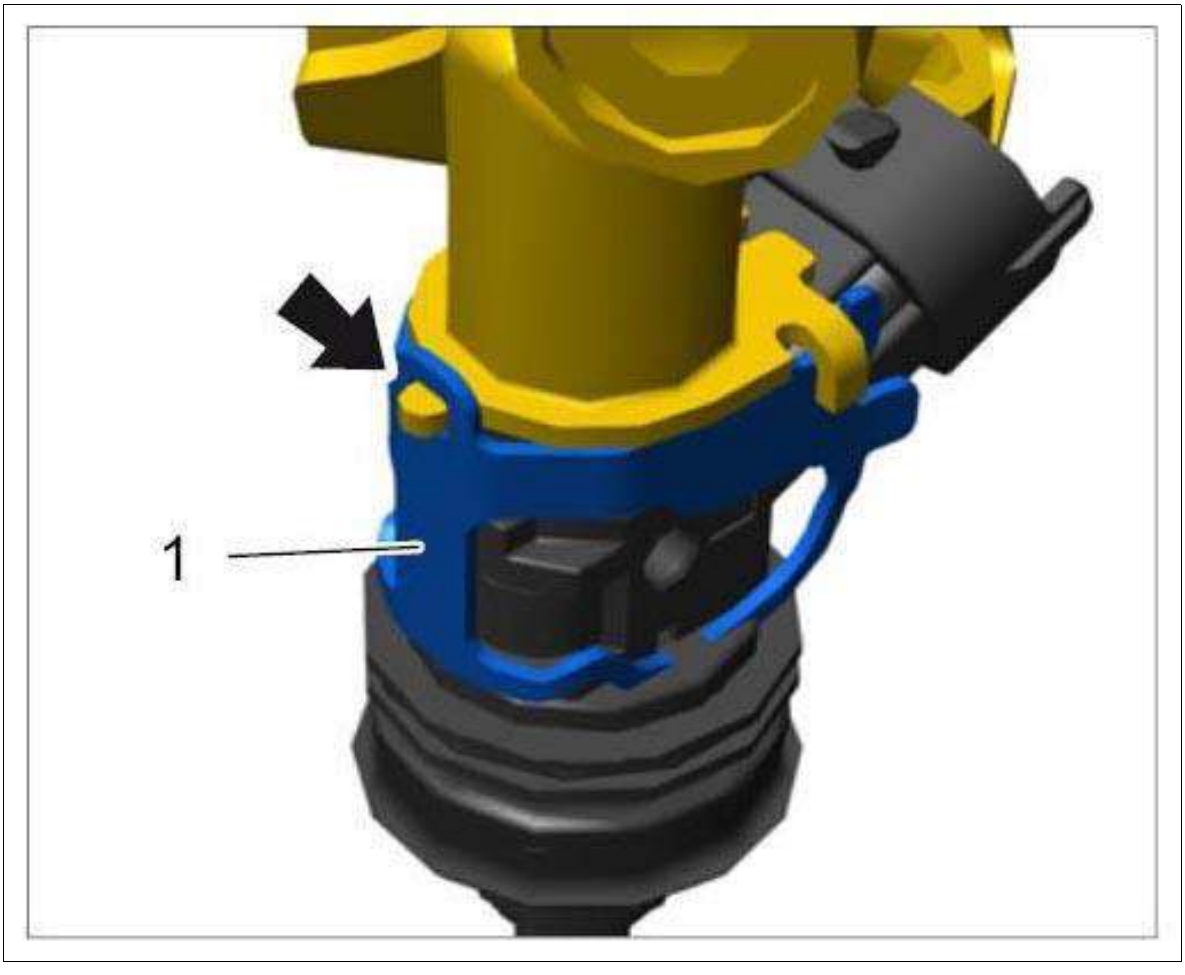

Courtesy of PORSCHE CARS NORTH AMERICA, INC.

5. Fit fuel collection pipe with fuel injectors on the cylinder head.

    1. 5.1. Fit fuel collection pipe according to tightening specifications.

6. Fit fuel connection line according to tightening specifications.

   → 249019 REMOVING AND INSTALLING FUEL CONNECTION LINE (HIGH-PRESSURE SIDE) .

WM 243019 REMOVING AND INSTALLING FUEL COLLECTION PIPE WITH FUEL INJECTORS (EXCEPT CARRERA "EDITION", CARRERA CABRIOLET "EDITION", CARRERA 4 "EDITION", CARRERA 4 CABRIOLET "EDITION", GT3, GT3 RS) > SUBSEQUENT WORK

WARNING: Leaking fuel supply lines

- *Emerging fuel*
- *Risk of fire*

→ Perform leak test.

1. Perform leak test.

   → 200101 CHECKING FUEL SYSTEM (HIGH-PRESSURE SIDE) FOR LEAKS .

   > *WARNING: Caustic fluids*
   >
   > *1. Danger of chemical burns*

   → Avoid contact with caustic fluid.

   → Wear personal protective gear.

   → Ensure that there is good ventilation.

   → If you do come into contact, wash off immediately with plenty of warm water and contact a doctor if necessary.

2. Remove adhesive residue on sealing faces of intake ports with acetone if necessary.

3. Install intake-air distributor.

   → Installing Intake-Air Distributor .

4. Install resonance tube.

   → Installing Resonance Tube .

5. Connect the battery.

   → 2X00IN WORK INSTRUCTIONS AFTER DISCONNECTING THE BATTERY .

6. **Perform First start** function.

   → 2001IN BLEEDING FUEL SYSTEM HIGH-PRESSURE SIDE (FIRST START FUNCTION) .

WM 243019 REMOVING AND INSTALLING FUEL COLLECTION PIPE (GT3, GT3 RS) > PRELIMINARY WORK

> *WARNING: Danger of objects or loads falling down*
>
> - *Risk of squashing or crushing*

→ Secure components to prevent them from falling down.

1. Lower the engine.

   → 100109 LOWERING THE ENGINE .

2. Remove resonance tube.

   → 247419 REMOVING AND INSTALLING RESONANCE TUBE .

3. Remove intake-air distributor for cylinder bank 1-3 or 4-6.

→ 244619 REMOVING AND INSTALLING INTAKE-AIR DISTRIBUTOR .

WM 243019 REMOVING AND INSTALLING FUEL COLLECTION PIPE (GT3, GT3 RS) > REMOVING FUEL COLLECTION PIPE

WARNING: Highly inflammable or explosive materials

- *Danger of fire or explosion*

→ Avoid contact with hot parts or sources of ignition.

→ Use suction to remove ignitable vapors.

→ Attach warning sign in a clearly visible position.

NOTE: Dirt on injection system components

- *Material damage*
- *Rough-running engine*
- *Bad exhaust emissions*

→ Thoroughly clean connection points and adjacent areas before loosening them. If the engine is very dirty, wash it before starting disassembly work.

→ Lay removed parts on a clean surface and cover them. Do not use fibre-shedding cloths.

→ Carefully cover components or seal them if repair work will not be carried out immediately. Place rubber caps on connections. Seal intake openings with film or adhesive tape.

→ Only install clean parts. Do not take spare parts out of the packaging until just before installation.

→ Never use compressed air when the system is open. Do not move the vehicle.

Component overview:

Fig 1: Identifying Fuel Collection Pipe Components

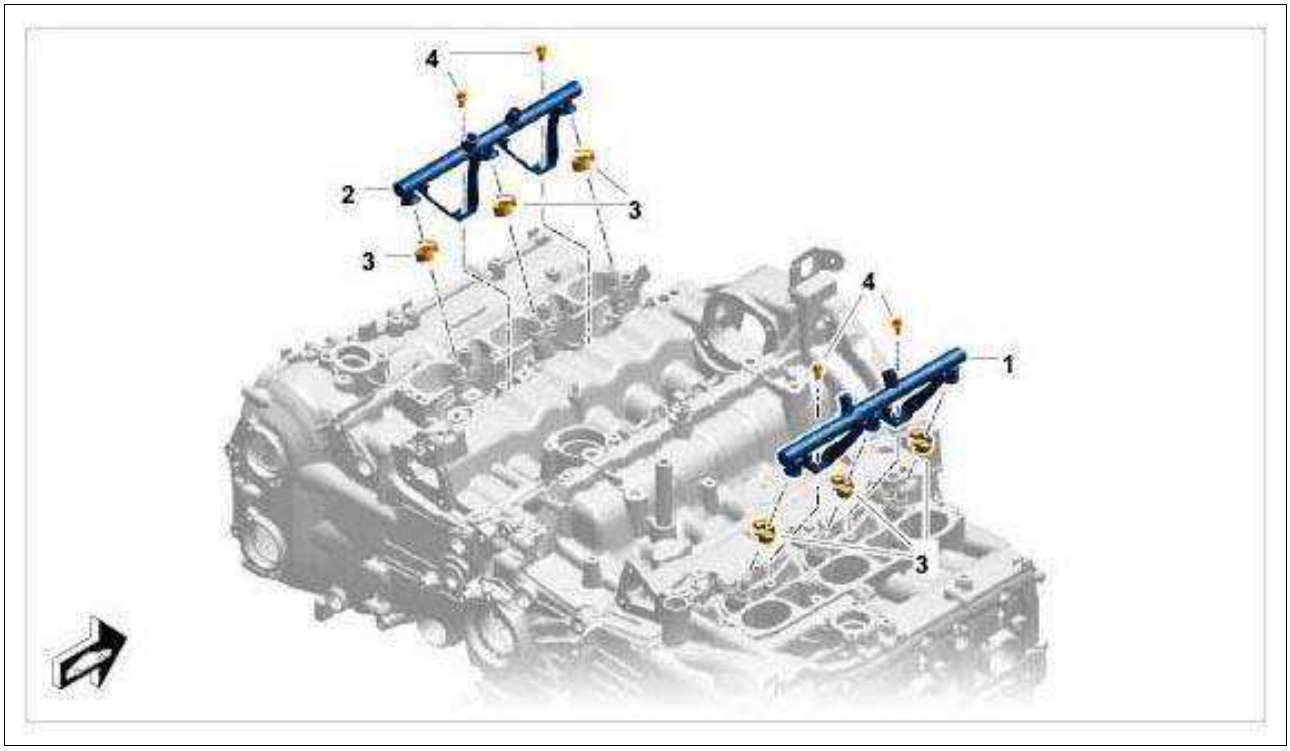

Courtesy of PORSCHE CARS NORTH AMERICA, INC.

1. Fuel collection pipe, cylinder bank 4-6
2. Fuel collection pipe, cylinder bank 1-3
3. Spring clamp - replace
4. Fastening screws, M6 x 16

1. Remove fuel line to high-pressure pump.

   → 249019 REMOVING AND INSTALLING FUEL LINE (HIGH-PRESSURE SIDE) .

2. Disconnect cable plugs in the fuel collection pipe work area **-1-** .

   1. 2.1. Pull off cable plugs for fuel pressure sensor **-2-** and fuel injectors **-3-** .

Fig 2: Identifying Cable Plugs In Fuel Collection Pipe Area

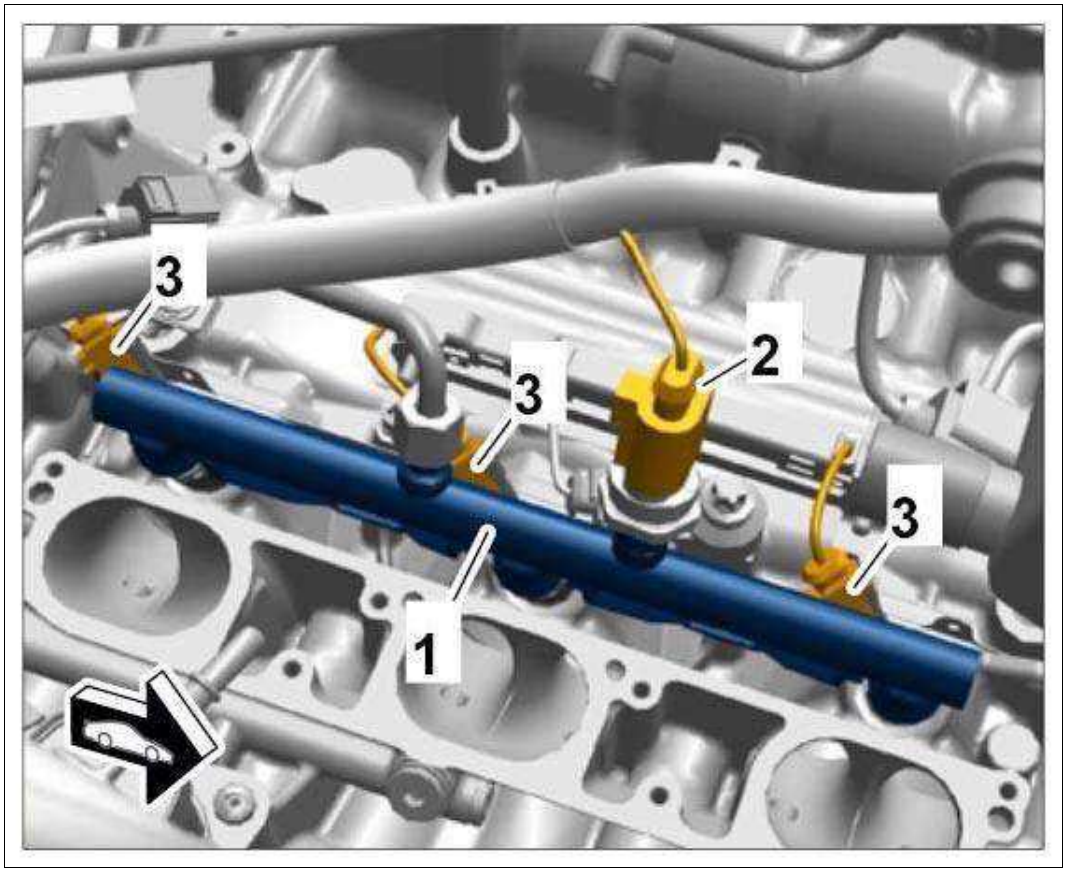

Courtesy of PORSCHE CARS NORTH AMERICA, INC.

3. Unscrew M6 fastening screws **-2-** and pull fuel collection pipe **-1-** off the fuel injectors.

Fig 3: Identifying Screws On Fuel Collection Pipe

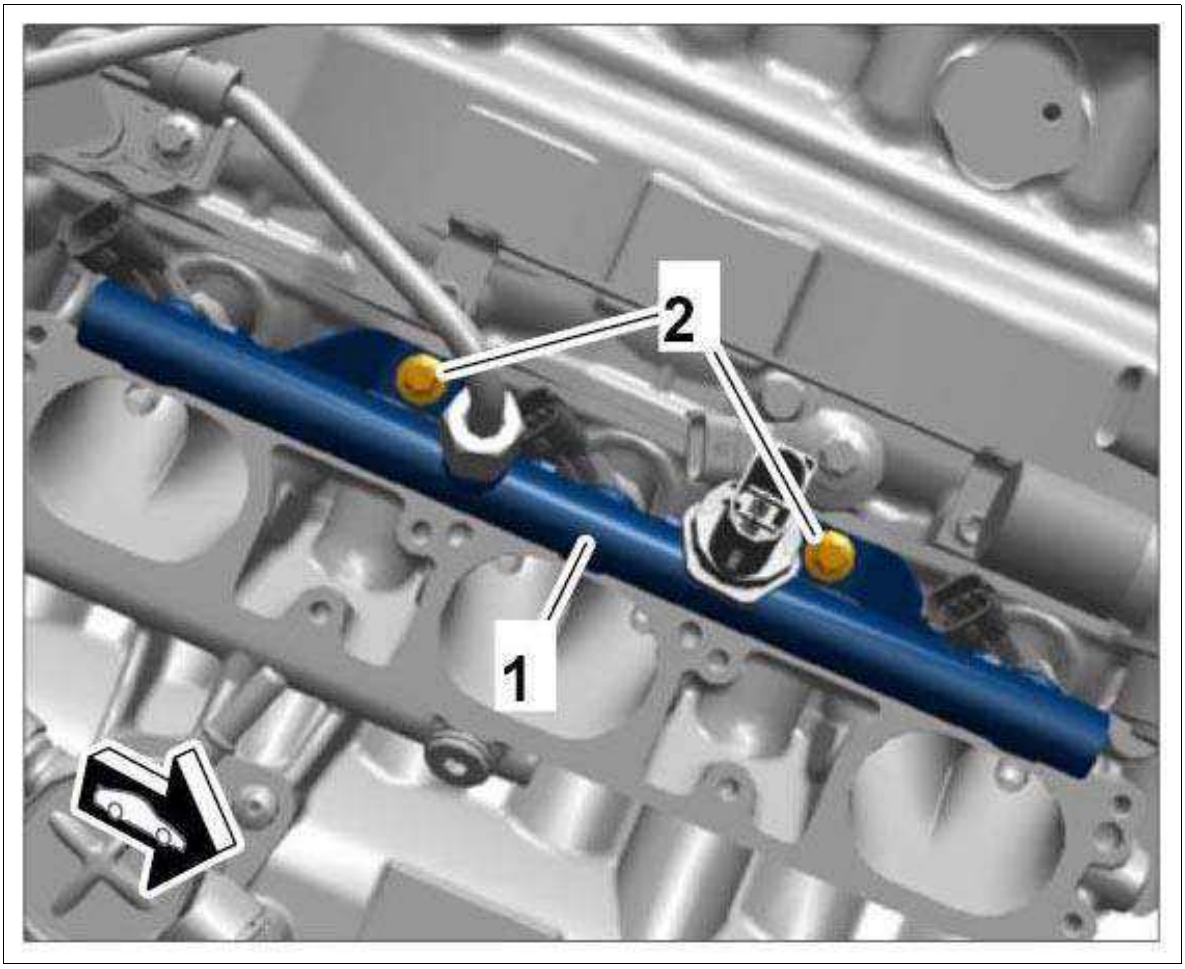

Courtesy of PORSCHE CARS NORTH AMERICA, INC.

WM 243019 REMOVING AND INSTALLING FUEL COLLECTION PIPE (GT3, GT3 RS) > INSTALLING FUEL COLLECTION PIPE

WARNING: Highly inflammable or explosive materials

- *Danger of fire or explosion*

→ Avoid contact with hot parts or sources of ignition.

→ Use suction to remove ignitable vapors.

→ Attach warning sign in a clearly visible position.

1. Grease O-rings on the fuel injectors and stops on the fuel collection pipe with VP881 lubricant.
2. Fit fuel collection pipe and secure with M6 fastening screws.
    1. 2.1. Tighten fastening screws uniformly.
3. Connect cable plugs for fuel injectors and fuel pressure sensor and check that they are fitted

securely.

WM 243019 REMOVING AND INSTALLING FUEL COLLECTION PIPE (GT3, GT3 RS) > SUBSEQUENT WORK

> *WARNING: Danger of objects or loads falling down*
>
> - *Risk of squashing or crushing*

→ Secure components to prevent them from falling down.

1. Install intake-air distributor.

   → Installing Intake-Air Distributor .

2. Install resonance tube.

   → Installing Resonance Tube .

3. Check intake system for leaks.

   → 244601 CHECKING INTAKE-AIR DISTRIBUTOR FOR LEAKS .

4. Raise the engine to installation position and secure it.

   → 100109 LOWERING THE ENGINE .

WM 243619 REMOVING AND INSTALLING AIR GUIDE IN REAR WHEEL HOUSING (GT3 RS) > TECHNICAL VALUES

Location	Description	Type	Basic value	Tolerance 1	Tolerance 2
Air guide in rear wheel housing	M6 screw	Tightening torque	10 Nm (7.5 ftlb.)		
Connecting piece for air guide in side panel	Tapping screw	Tightening torque	3 Nm (2 ftlb.)		

WM 243619 REMOVING AND INSTALLING AIR GUIDE IN REAR WHEEL HOUSING (GT3 RS) > PRELIMINARY WORK

1. Remove rear air guide.

2. Remove air intake in the rear side panel.

   → 665619 REMOVING AND INSTALLING AIR INTAKE (SIDE PANEL) .

WM 243619 REMOVING AND INSTALLING AIR GUIDE IN REAR WHEEL HOUSING (GT3 RS) > REMOVING AIR GUIDE IN WHEEL HOUSING

Overview of complete air guide:

Fig 1: Overview Of Air Guide

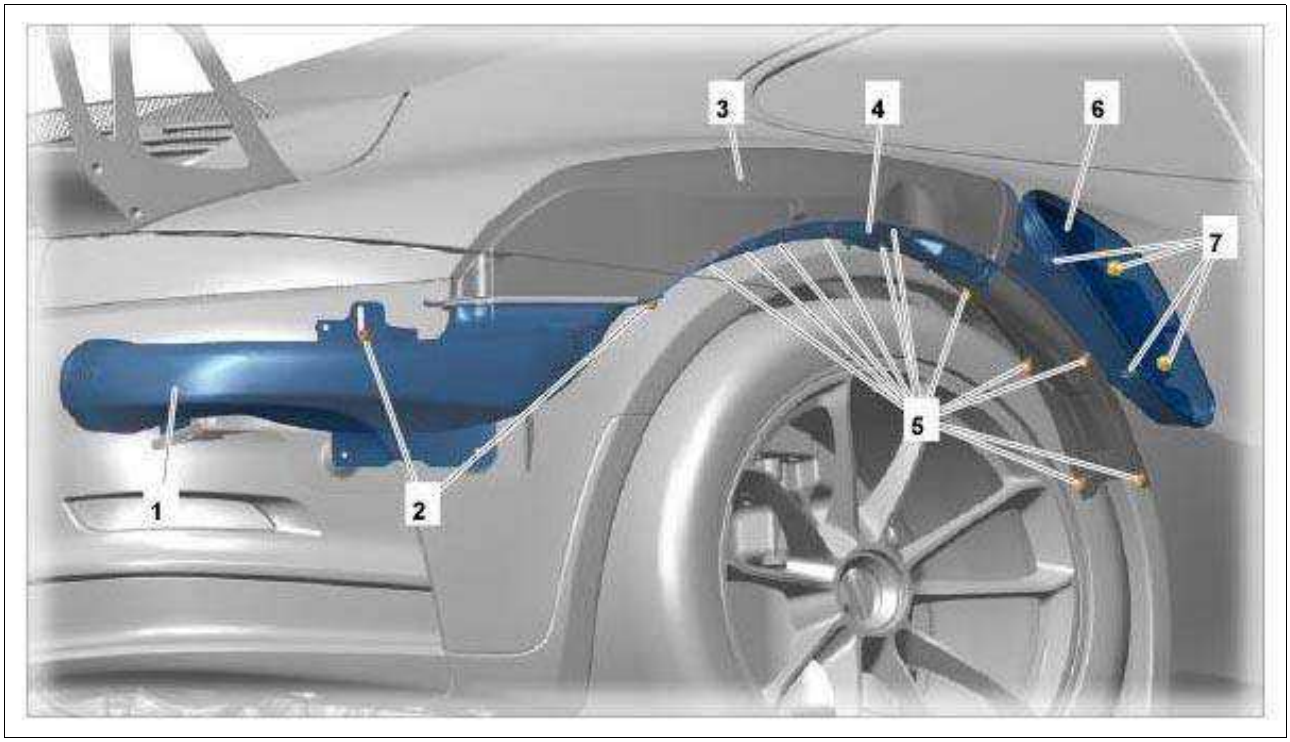

Courtesy of PORSCHE CARS NORTH AMERICA, INC.

1. Rear air guide
2. Hexagon nuts
3. Air guide in wheel housing - upper part
4. Cover for air guide in wheel housing (lower part)
5. M6 screws
6. Air guide to connecting piece in side panel
7. Tapping screws for connecting piece (4 ea.)

1. Loosen air guide **-1-** .

    1. 1.1. Unscrew M6 screws **-2-** .

Fig 2: Identifying Air Guide In Rear Wheel Housing Screws

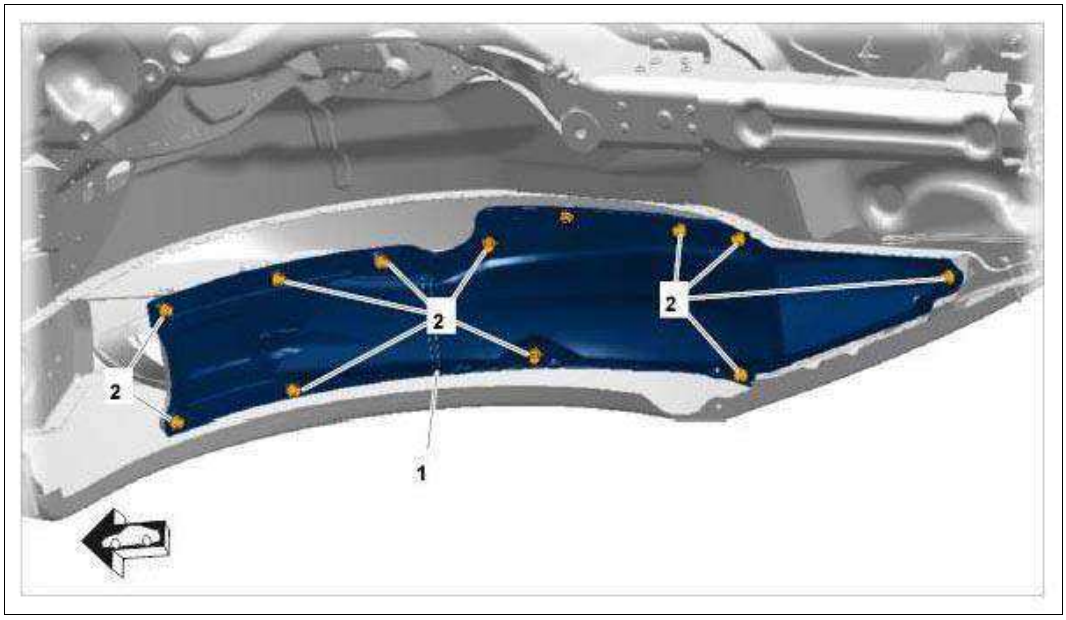

Courtesy of PORSCHE CARS NORTH AMERICA, INC.

2. Unclip cover **-1-** for air guide **-arrows-** .

Fig 3: Locating Air Guide In Wheel Housing Cover

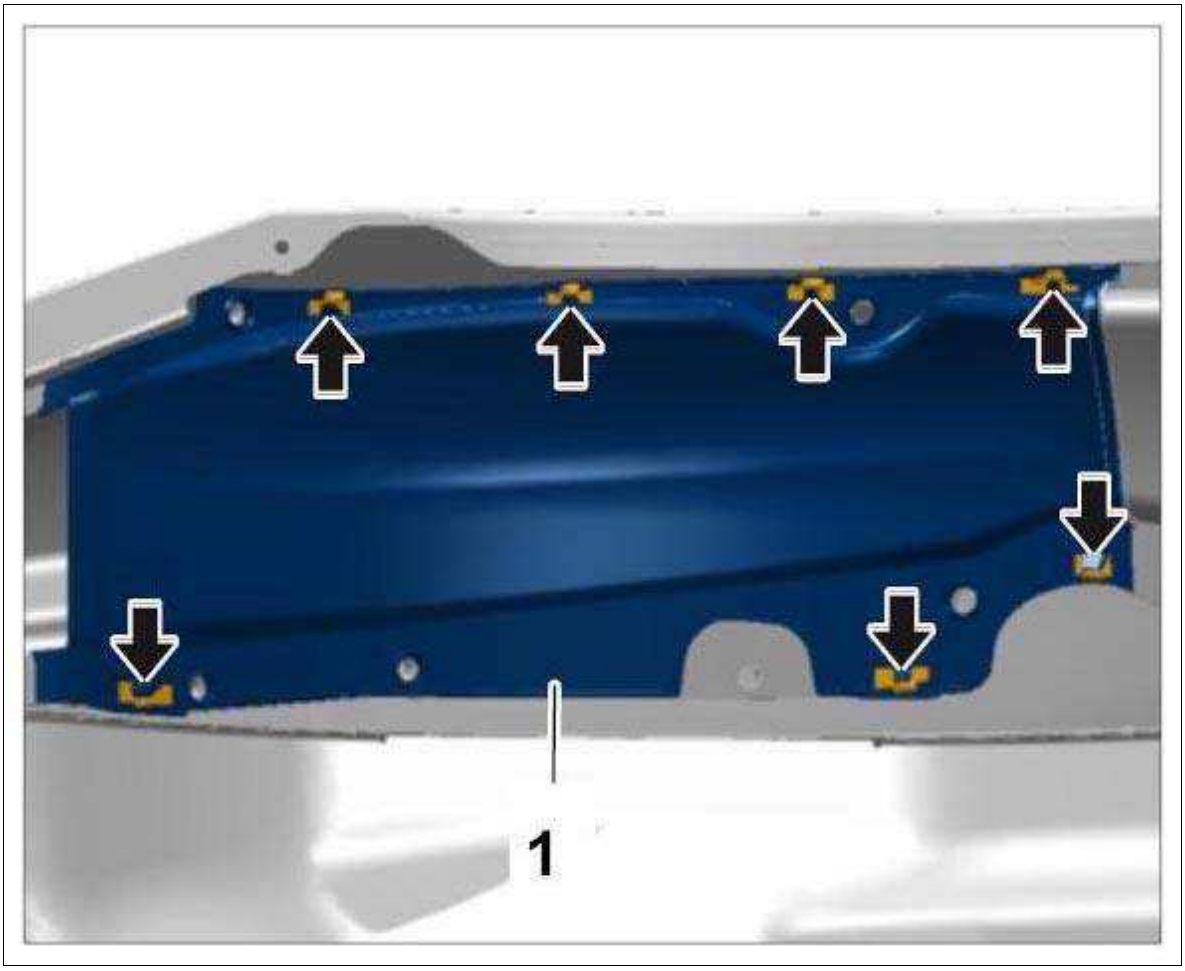

Courtesy of PORSCHE CARS NORTH AMERICA, INC.

3. Loosen connecting piece **-1-** for air guide on side panel.

    1. 3.1. Unscrew tapping screws **-2-** .

    Fig 4: Connecting Piece For Air Guide On Side Panel

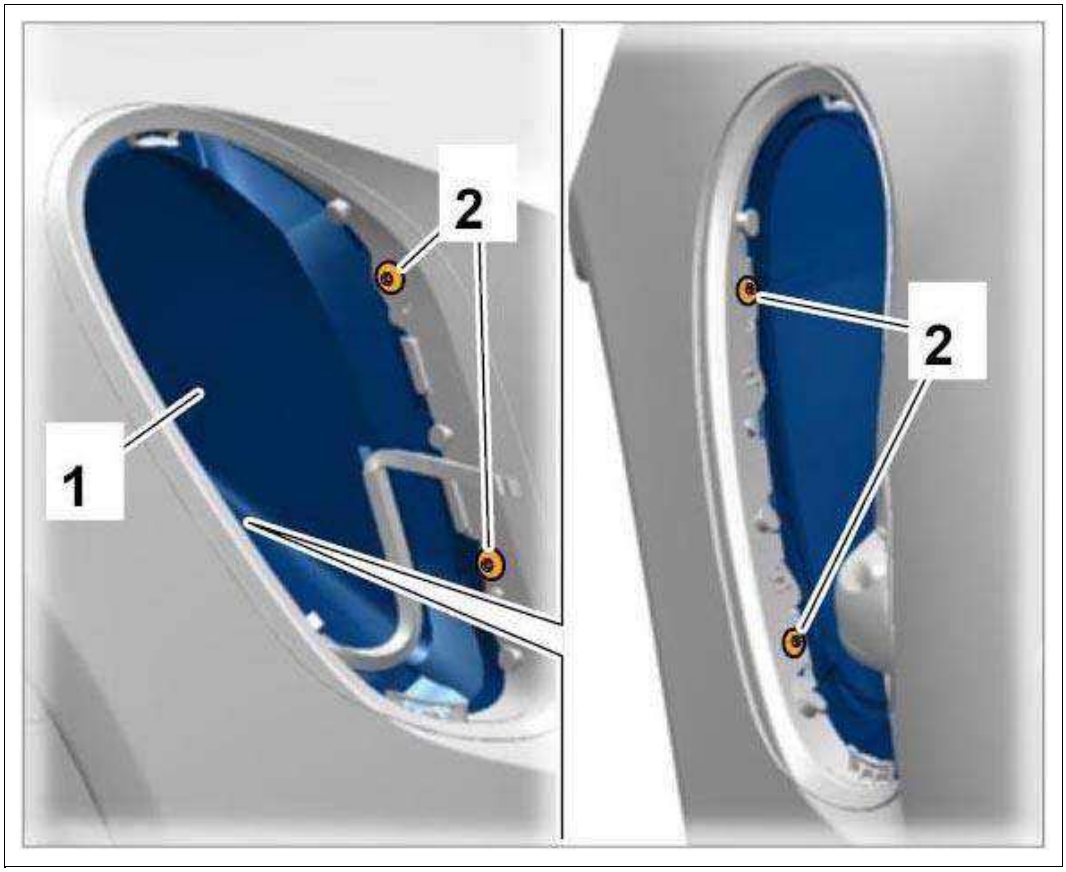

Courtesy of PORSCHE CARS NORTH AMERICA, INC.

4. Remove air guide from the wheel housing.

    Be careful of the clips for the connecting piece!

WM 243619 REMOVING AND INSTALLING AIR GUIDE IN REAR WHEEL HOUSING (GT3 RS) > INSTALLING AIR GUIDE IN WHEEL HOUSING

1. Insert and align air guide in wheel housing.

    Connecting piece must be clipped to the center part of the air guide!

2. Position connecting piece **-1-** on the side panel and secure the center part loosely with two M6 screws.

    1. 2.1. Tighten tapping screws **-2-** .

    Tightening torque 3 Nm (2 ftlb.)

Fig 1: Connecting Piece For Air Guide On Side Panel

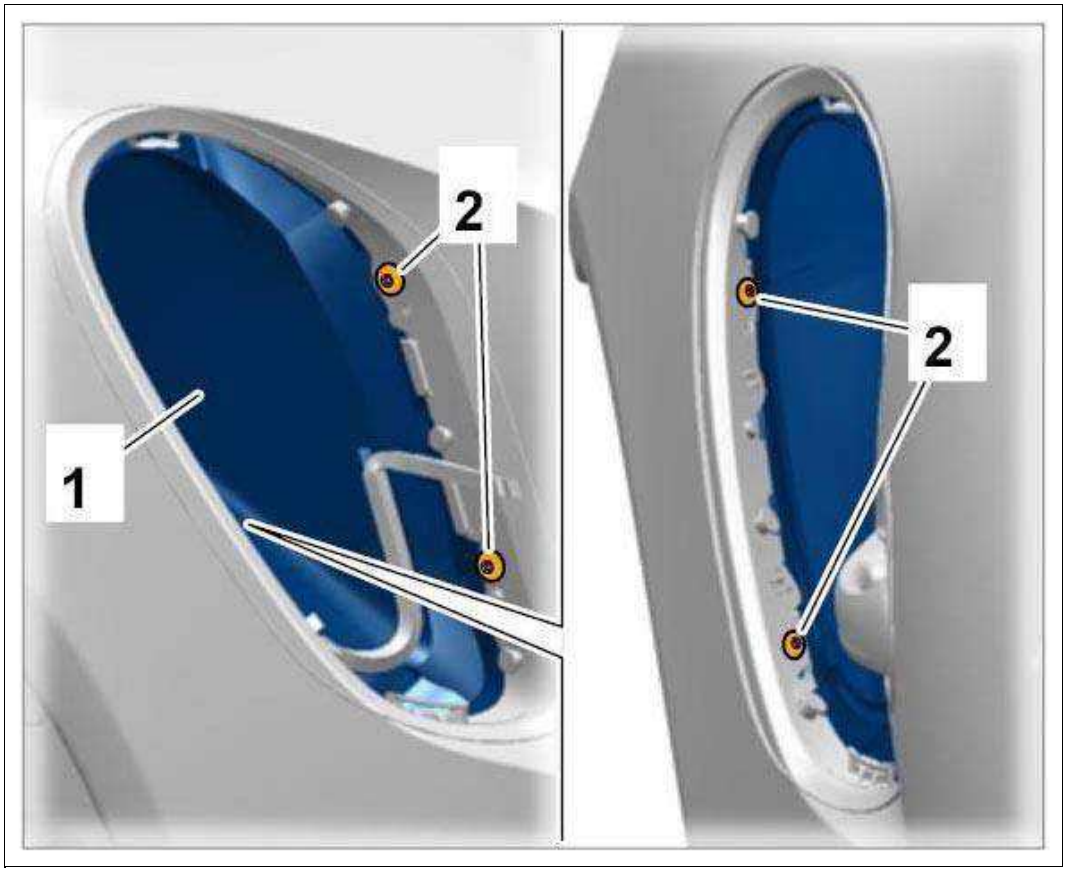

Courtesy of PORSCHE CARS NORTH AMERICA, INC.

3. Clip in cover.
4. Secure the air guide with M6 screws.

   Tightening torque 10 Nm (7.5 ftlb.)

WM 243619 REMOVING AND INSTALLING AIR GUIDE IN REAR WHEEL HOUSING (GT3 RS) > SUBSEQUENT WORK

1. Install rear air guide.

   → 243619 REMOVING AND INSTALLING REAR AIR GUIDE .

2. Install air intake in the rear side panel.

   → 665619 REMOVING AND INSTALLING AIR INTAKE (SIDE PANEL) .

WM 243619 REMOVING AND INSTALLING AIR GUIDE (EXCEPT CARRERA "EDITION", CARRERA CABRIOLET "EDITION", CARRERA 4 "EDITION", CARRERA 4 CABRIOLET "EDITION", GT3 RS) > PRELIMINARY WORK

1. Remove engine-compartment blower.

   → 198119 REMOVING AND INSTALLING ENGINE-COMPARTMENT BLOWER .

WM 243619 REMOVING AND INSTALLING AIR GUIDE (EXCEPT CARRERA "EDITION", CARRERA CABRIOLET "EDITION", CARRERA 4 "EDITION", CARRERA 4 CABRIOLET "EDITION", GT3 RS) > REMOVING AIR GUIDE

Fig 1: Identifying Air Guide Installation Position

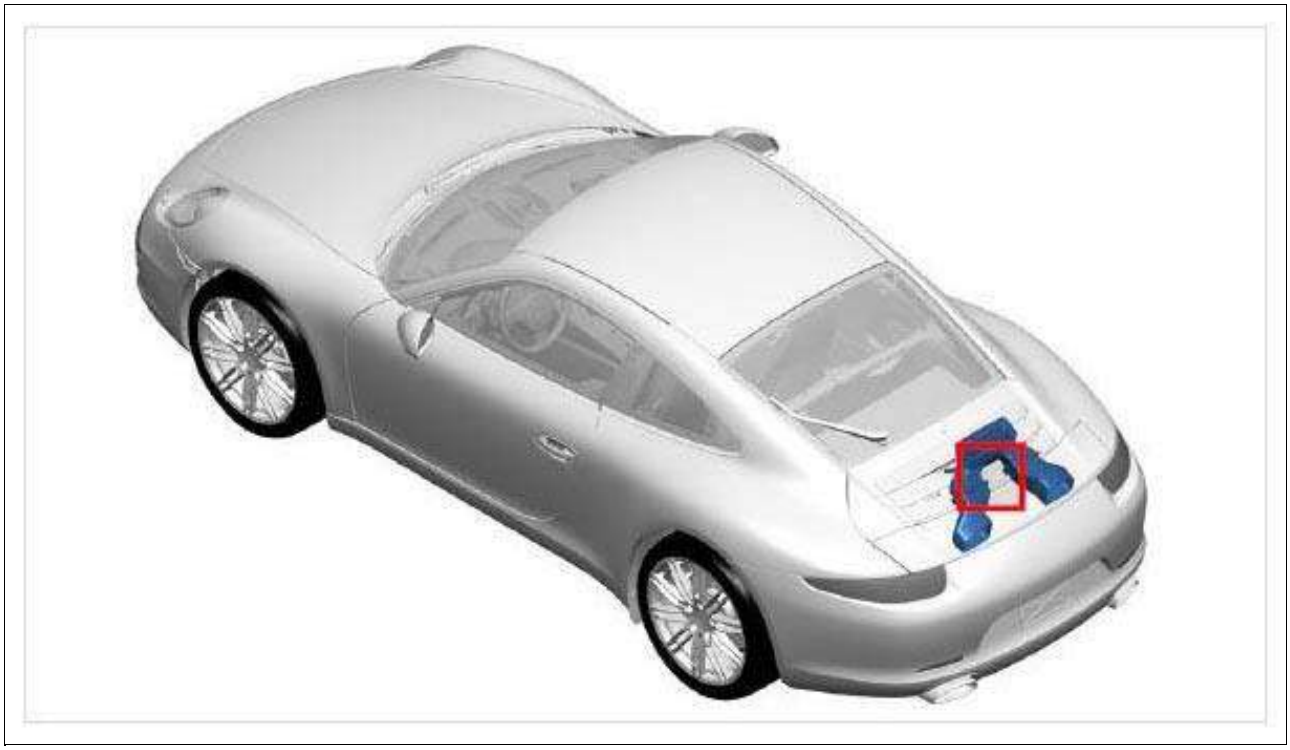

Courtesy of PORSCHE CARS NORTH AMERICA, INC.

1. Pull out air guide at the retaining clips **-arrows-** and remove it in an upward direction.

Fig 2: Removing Air Guide

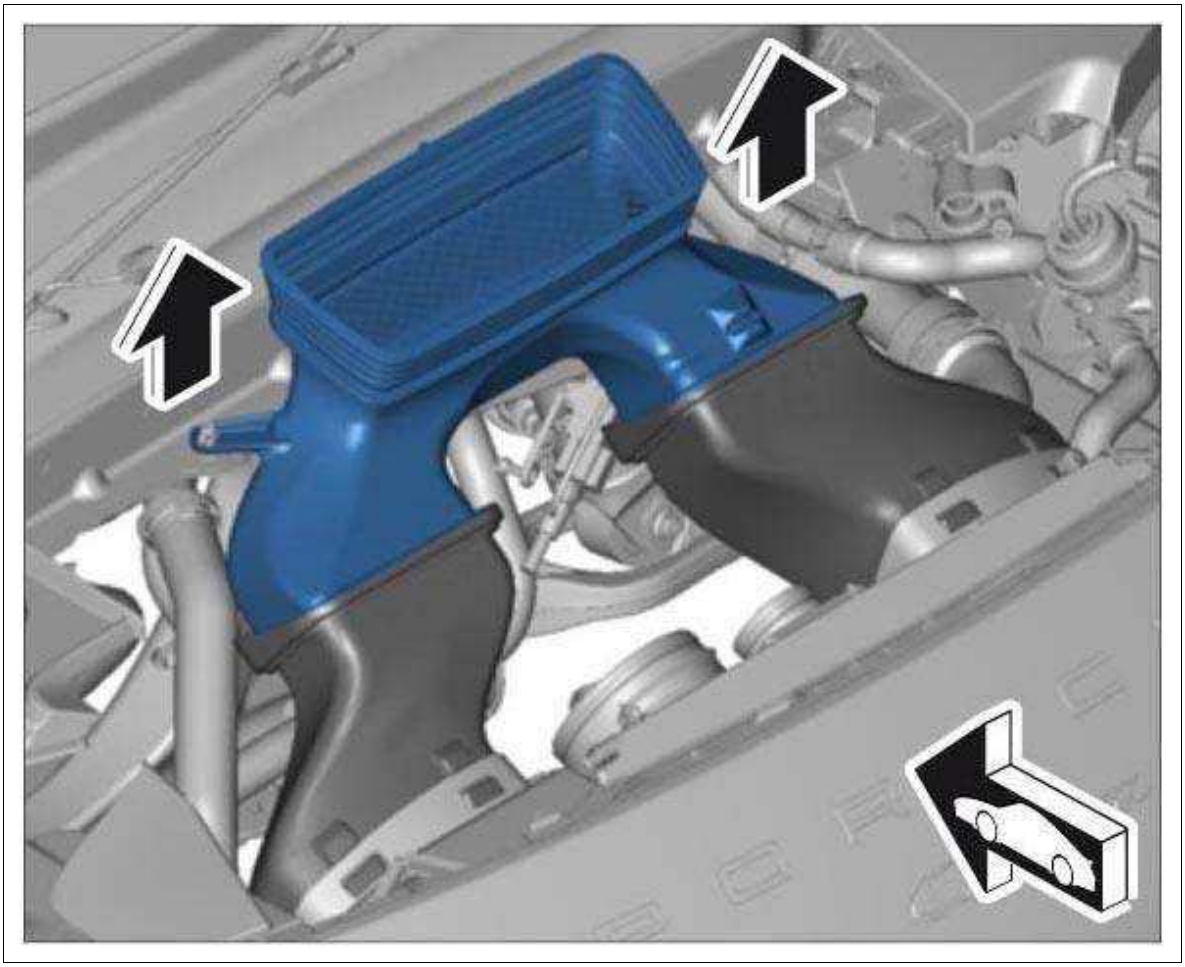

Courtesy of PORSCHE CARS NORTH AMERICA, INC.

2. Pull the air duct forward **-arrow-** out of the air cleaner housing.

   Carefully unclip the locking lugs using a plastic spatula.

Fig 3: Removing Air Duct

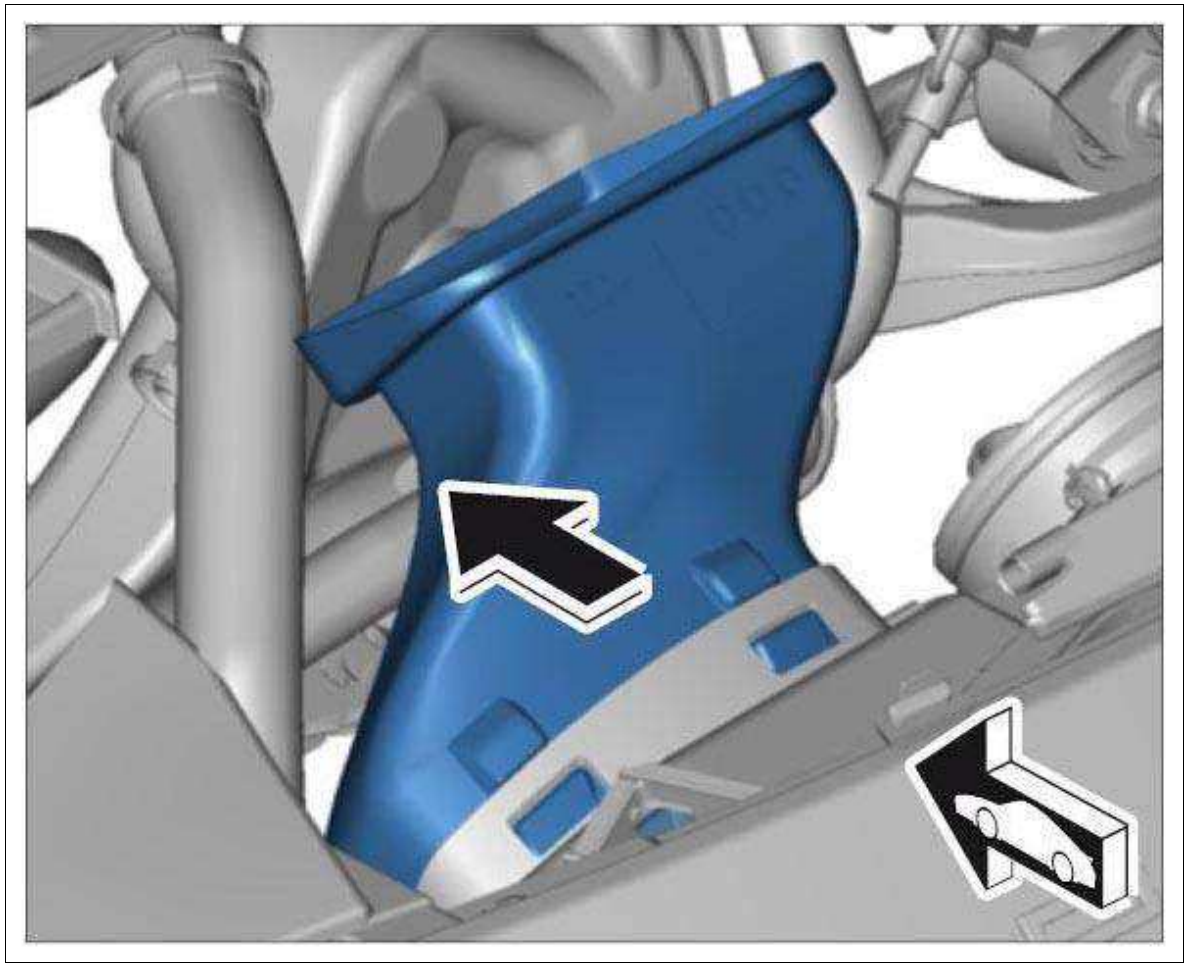

Courtesy of PORSCHE CARS NORTH AMERICA, INC.

WM 243619 REMOVING AND INSTALLING AIR GUIDE (EXCEPT CARRERA "EDITION", CARRERA CABRIOLET "EDITION", CARRERA 4 "EDITION", CARRERA 4 CABRIOLET "EDITION", GT3 RS) > REMOVING AIR GUIDE > INSTALLING AIR GUIDE

Information

The following points must be observed during installation:

- Apply a light coating of Kluber Syntheso Glep on the rubber sleeve -1- before installation.
- Check that the air guide (sealing foam) -2- is seated correctly in the air ducts.

Fig 1: Installing Air Guide

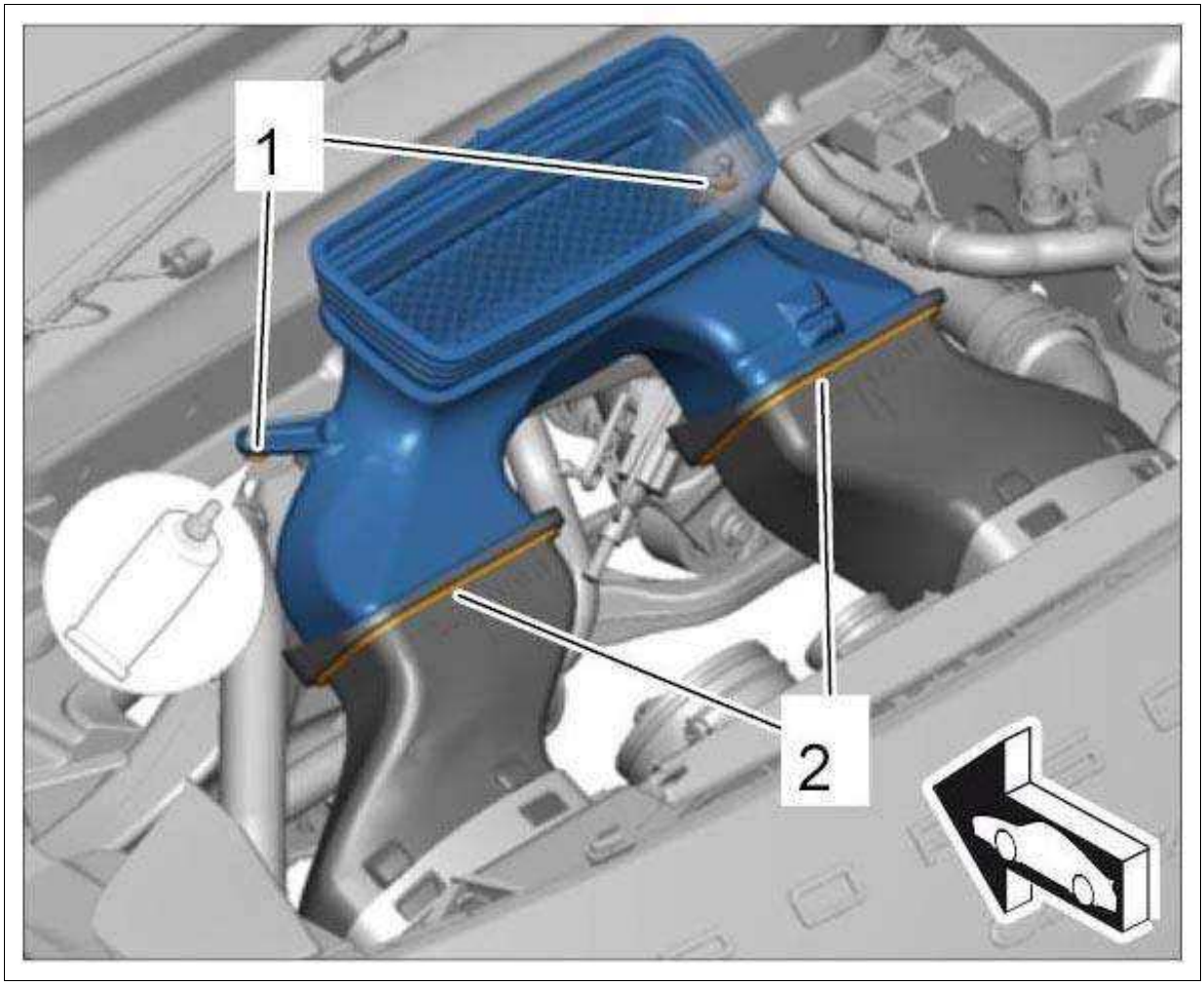

Courtesy of PORSCHE CARS NORTH AMERICA, INC.

Installation is performed in reverse order to removal.

WM 243619 REMOVING AND INSTALLING AIR GUIDE (EXCEPT CARRERA "EDITION", CARRERA CABRIOLET "EDITION", CARRERA 4 "EDITION", CARRERA 4 CABRIOLET "EDITION", GT3 RS) > SUBSEQUENT WORK

1. Install engine-compartment blower.

   → Installing Engine-Compartment Blower .

WM 244001 CHECKING FUEL INJECTOR (EXCEPT CARRERA "EDITION", CARRERA CABRIOLET "EDITION", CARRERA 4 "EDITION", CARRERA 4 CABRIOLET "EDITION", GT3, GT3 RS) > TOOLS

Designation	Type	Number	Description

fuel identification unit VAS 6774	Workshop equipment	WE 1494	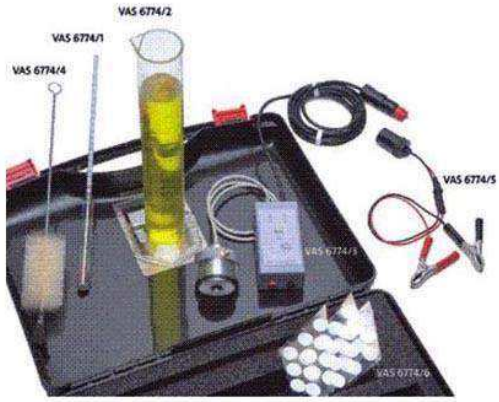
petrol injector test stand:	Special tool	9848	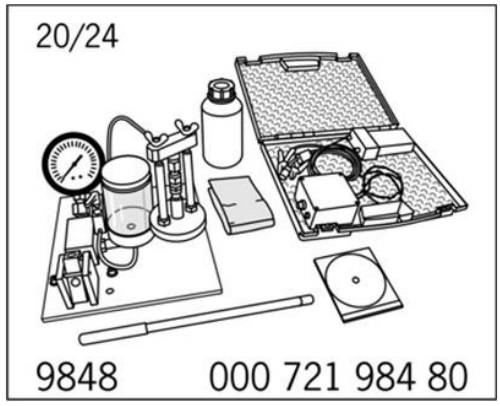

WM 244001 CHECKING FUEL INJECTOR (EXCEPT CARRERA "EDITION", CARRERA CABRIOLET "EDITION", CARRERA 4 "EDITION", CARRERA 4 CABRIOLET "EDITION", GT3, GT3 RS) > PRELIMINARY WORK

WARNING: Highly inflammable or explosive materials

- *Danger of fire or explosion*

→ Avoid contact with hot parts or sources of ignition.

→ Use suction to remove ignitable vapors.

→ Attach warning sign in a clearly visible position.

Information

- Before checking the fuel injectors, it is absolutely essential to determine the quality of the fuel used and compare it with the required fuel quality.
- Use special tool fuel identification unit VAS 6774 WE 1494 to do this.
  1. Check fuel quality.

     → 200301 CHECKING FUEL QUALITY .
  2. Remove fuel collection pipe with fuel injectors.

→ 243019 REMOVING AND INSTALLING FUEL COLLECTION PIPE WITH FUEL INJECTORS .

WM 244001 CHECKING FUEL INJECTOR (EXCEPT CARRERA "EDITION", CARRERA CABRIOLET "EDITION", CARRERA 4 "EDITION", CARRERA 4 CABRIOLET "EDITION", GT3, GT3 RS) > TOOLS AND MATERIALS

Information

- A 12-volt power supply must be guaranteed in order to ensure that the control electronics will function correctly.
- Only use the supplied fluid for testing.
- The functions of the test device are shown in detail on the supplied CD.
- Recommendation: Read the information provided on the CD before getting started.

Items supplied with petrol injector test stand: 9848

Fig 1: Identifying Fuel Injector Tester

Courtesy of PORSCHE CARS NORTH AMERICA, INC.

1. Test device for fuel injectors in petrol high-pressure systems
2. Pump lever
3. Instruction CD
4. Case for control electronics
5. Test fluid

6. Absorbent cloth

7. Control mechanism with connecting lines

8. Sender with connecting lines

WM 244001 CHECKING FUEL INJECTOR (EXCEPT CARRERA "EDITION", CARRERA CABRIOLET "EDITION", CARRERA 4 "EDITION", CARRERA 4 CABRIOLET "EDITION", GT3, GT3 RS) > CHECKING FUEL INJECTOR

1. Clamp the test device **-1-** on the workbench or in a vice.

   Fig 1: Securing Test Device

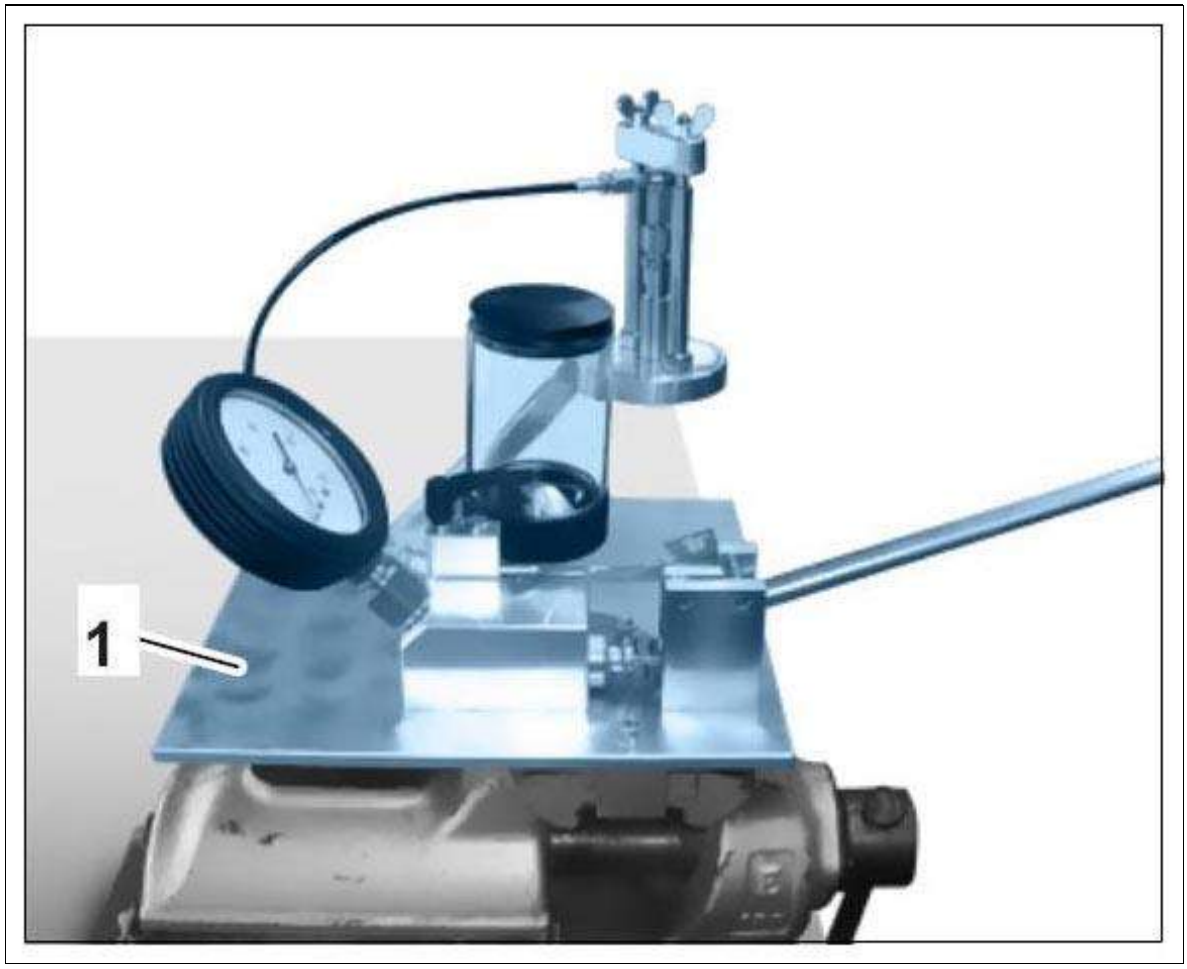

Courtesy of PORSCHE CARS NORTH AMERICA, INC.

2. Check that the container is filled with test fluid.

   Function test (leak test):

3. Perform leak test on the test device.

   1. 3.1. Fit test adapter.

   2. 3.2. Bleed the system using the pressure piston **-1-** (no air bubbles in the transparent hose).

Black lever is open!

3. 3.3. **Close the black lever by turning it clockwise!**
4. 3.4. Use the pressure piston to build up pressure of 100 bar **-arrow-** .
5. 3.5. When the pointer on the pressure gauge stops moving, the pressure in the closed system must be retained.

   Monitor the pressure gauge for one minute!

6. 3.6. If the pressure drops, check all connections for leaks and correct them.

   Fig 2: Checking Fuel Injector Using Test Device

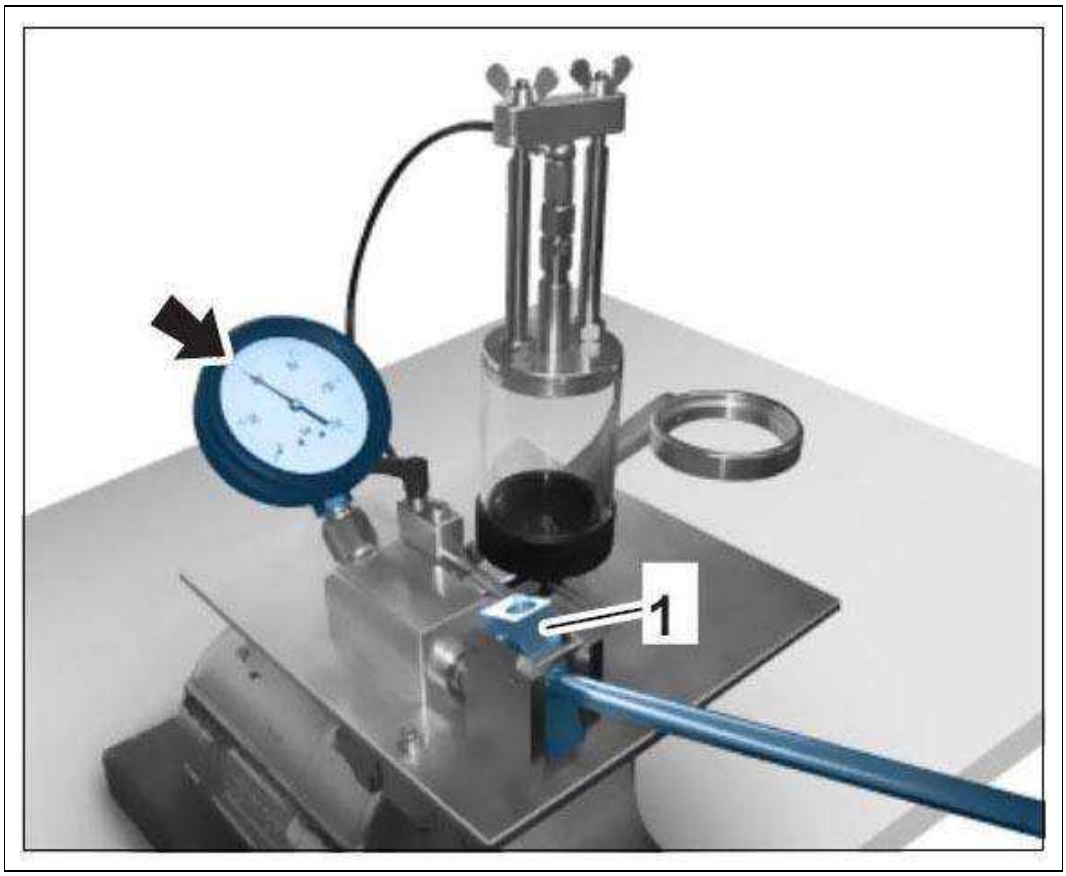

Courtesy of PORSCHE CARS NORTH AMERICA, INC.

4. Remove the test adapter and screw it to the base plate.
5. Insert fuel injector into the test device.
   1. 5.1. Insert fuel injector **-1-** into the mounting plate.
   2. 5.2. Fit a suitable upper part (O-ring or screw-on variant) **-2-** for the injector.
   3. 5.3. Secure the tensioning plate **-3-** with the winged nuts.

Fig 3: Inserting Fuel Injector

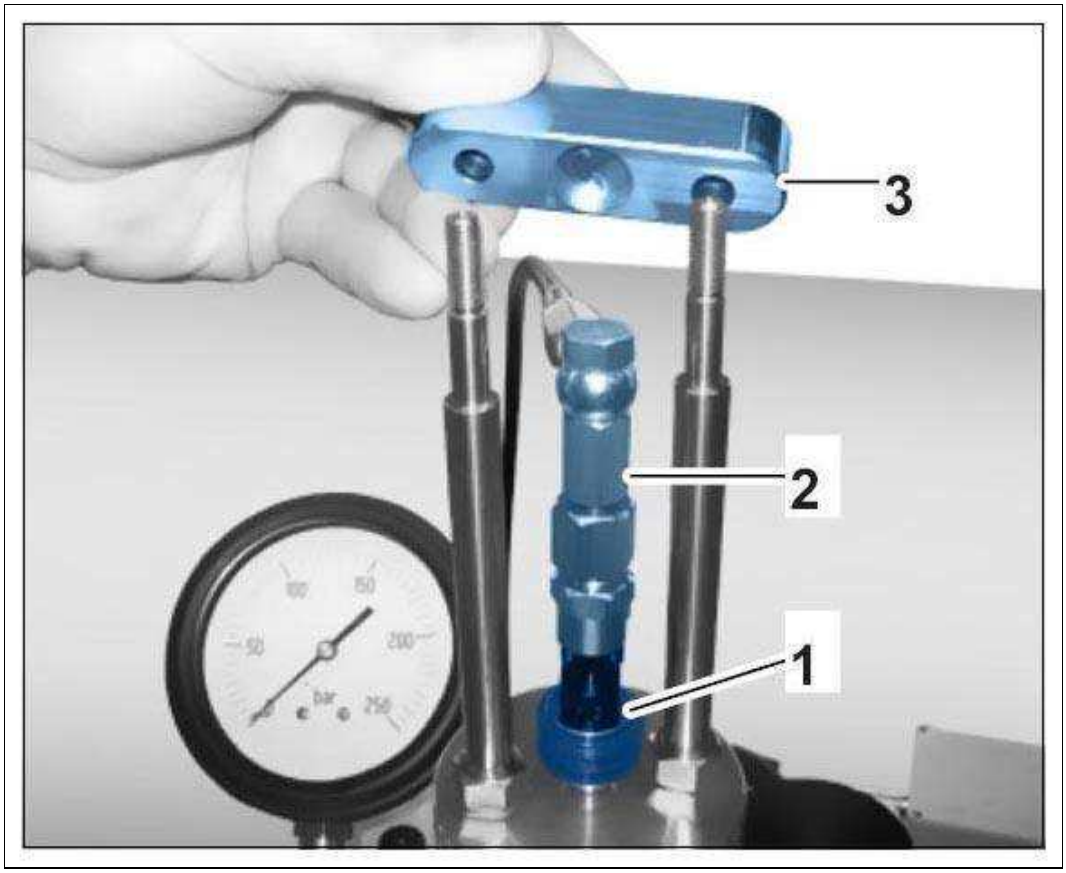

Courtesy of PORSCHE CARS NORTH AMERICA, INC.

6. Connect the relevant cable plug **-1-** to the fuel injector **-2-** .

Fig 4: Identifying Cable Plug On Fuel Injector

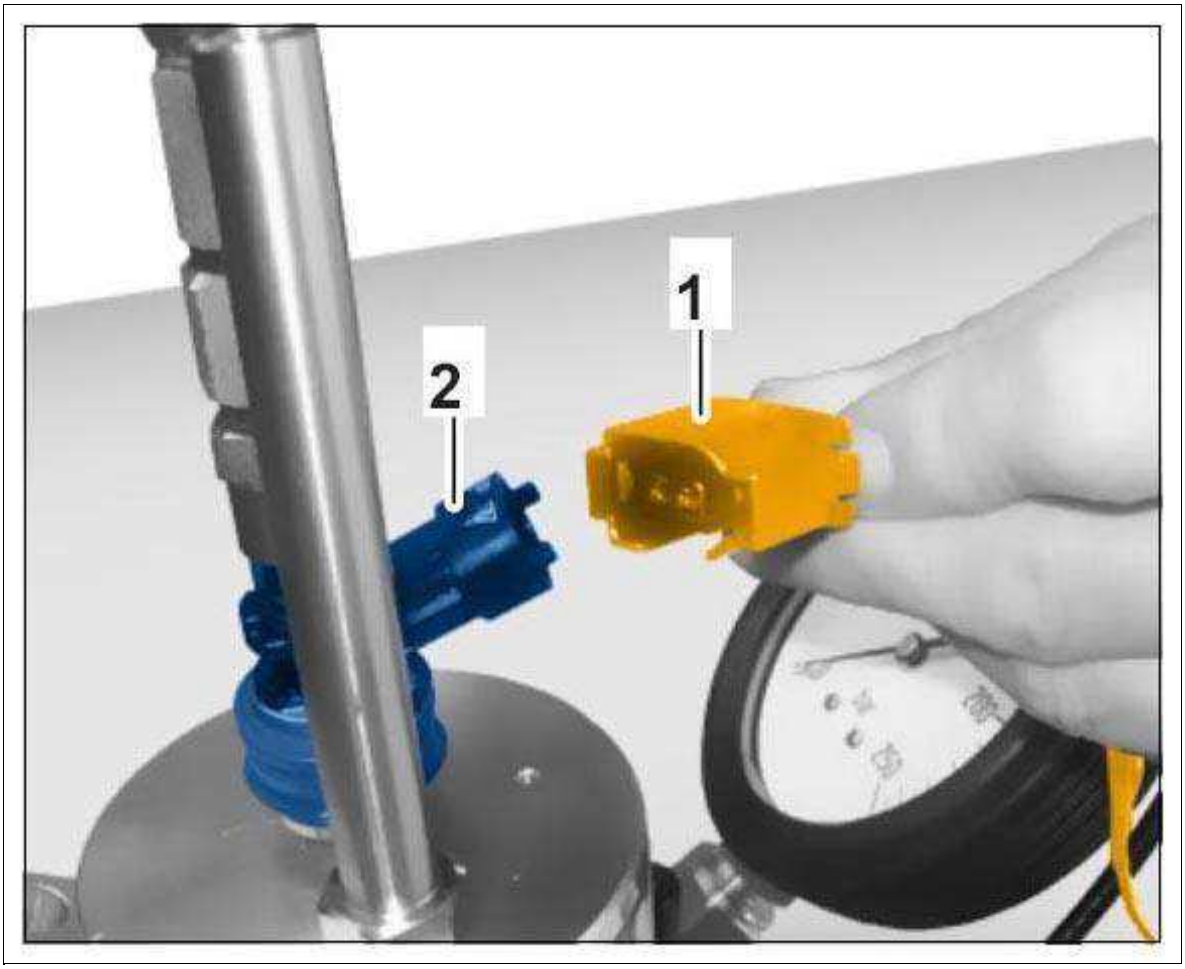

Courtesy of PORSCHE CARS NORTH AMERICA, INC.

7. Connect sender and control mechanism.

    1. 7.1. Connect connecting cable **-1-** for the fuel injector to the sender **-2-** .
    2. 7.2. Connect signal cable of the control mechanism **-3-** to the sender **-arrow-** .
    3. 7.3. Connect the control mechanism's power supply connecting cable to the 12-volt battery **-4-** .

Fig 5: Connecting Sender And Control Mechanism

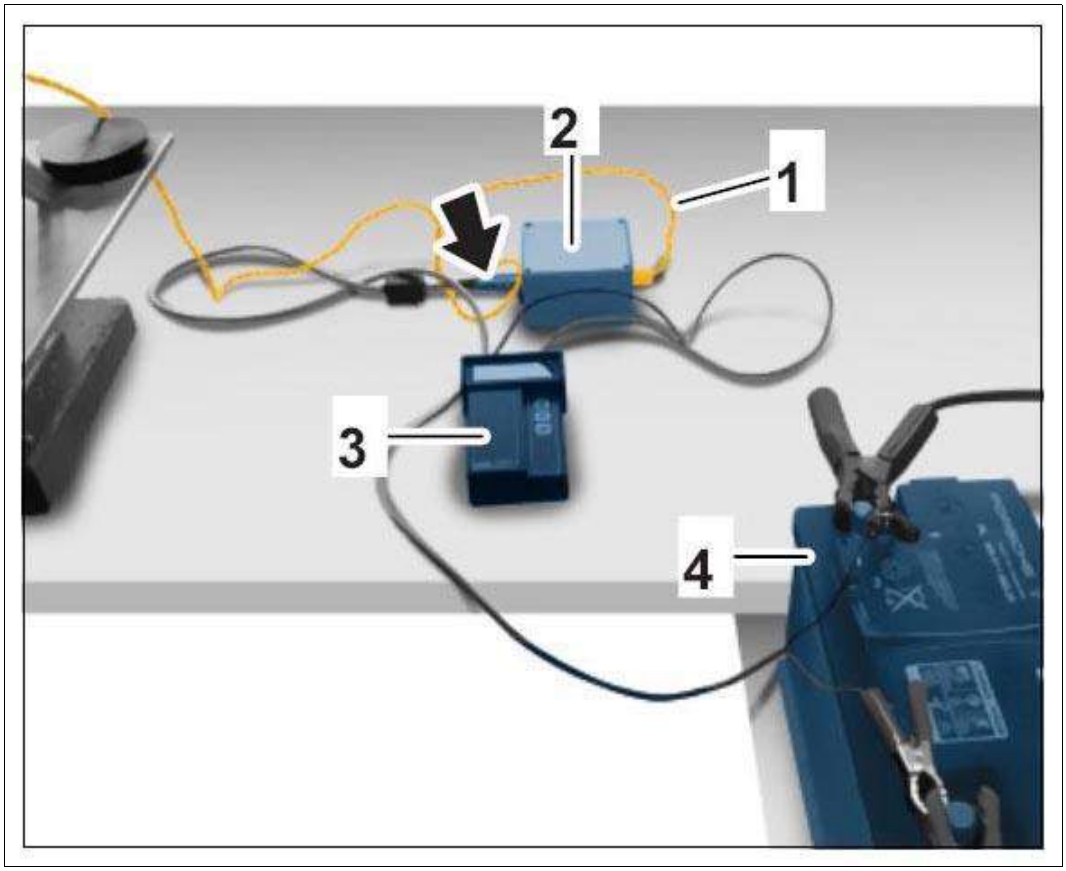

Courtesy of PORSCHE CARS NORTH AMERICA, INC.

Cleaning injectors:

The injectors are cleaned in continuous mode!

8. Visually inspect the injector tip for soiling.
9. Clean the injector tip in an ultrasound bath first if possible.
10. Fit the fuel injector in a holder and position it on the container.
11. Set Continuous mode on the control mechanism using the arrow keys and press **"Enter"** to start.

    Press and hold the "Enter" key for about 3 seconds to get the continuous signal.

Fig 6: Screen Display - Control Mechanism Enter Key

Courtesy of PORSCHE CARS NORTH AMERICA, INC.

12. Actuate the pressure piston several times to set a pressure of around 150 bar.

    1. 12.1. Press **"Enter"** to stop the process.
    2. 12.2. Then check the spray pattern.

    Checking spray pattern:

13. To check the spray pattern, set **"Single shot" -1-** on the control mechanism using the arrow keys.

Fig 7: Screen Display - Single Shot On Control Mechanism

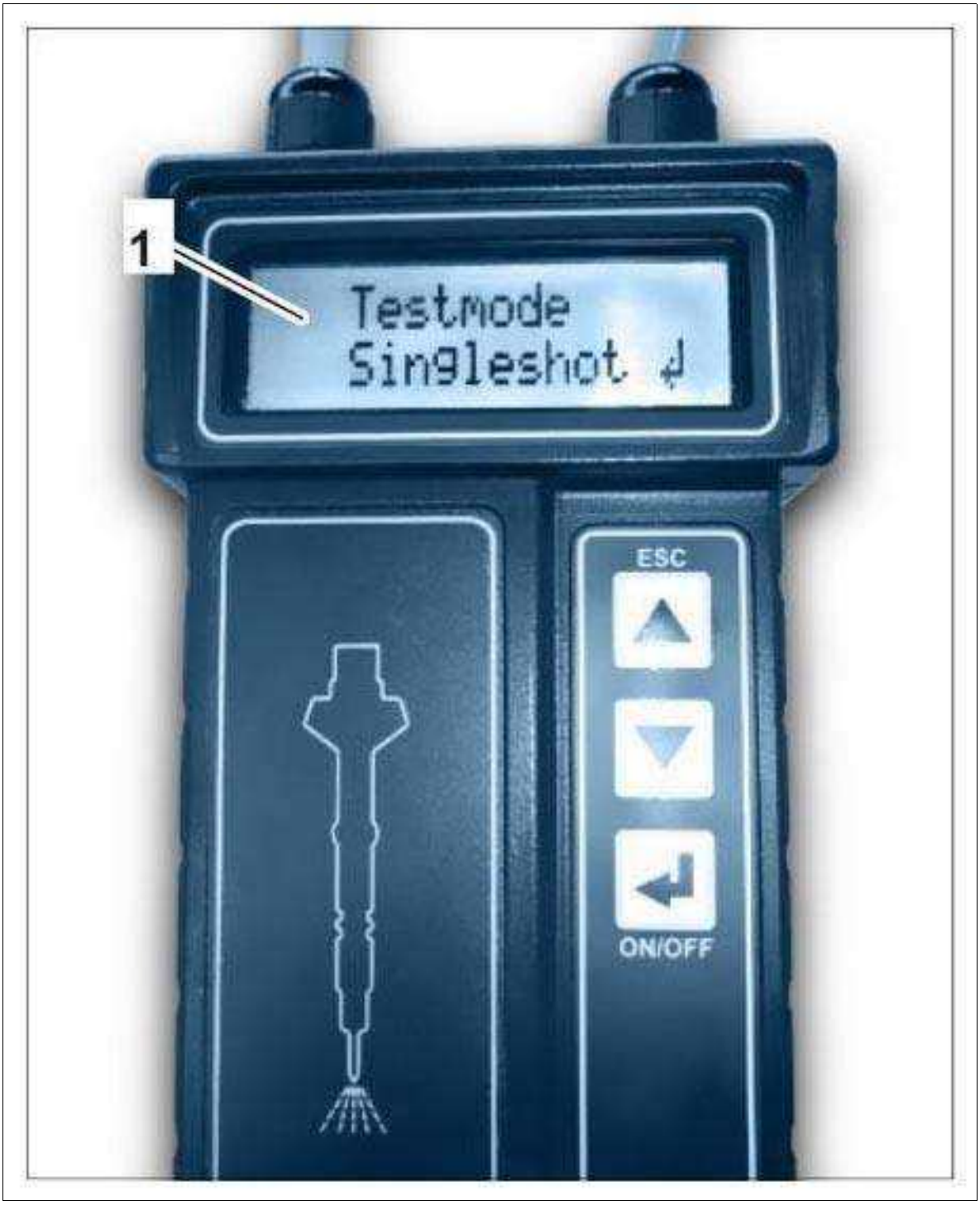

Courtesy of PORSCHE CARS NORTH AMERICA, INC.

14. Preparatory steps for checking the spray pattern:

    1. 14.1. **Close the black lever by turning it clockwise!**
    2. 14.2. **Set the pressure to 100 bar!**

3. 14.3. Insert fuel injector holder **-1-** into the retaining ring **-2-** .

4. 14.4. Place clean paper (with a quality of at least 80g/cm, about DIN A4 size) **-3-** under the test device.

Fig 8: Checking Spray Pattern Using Test Device

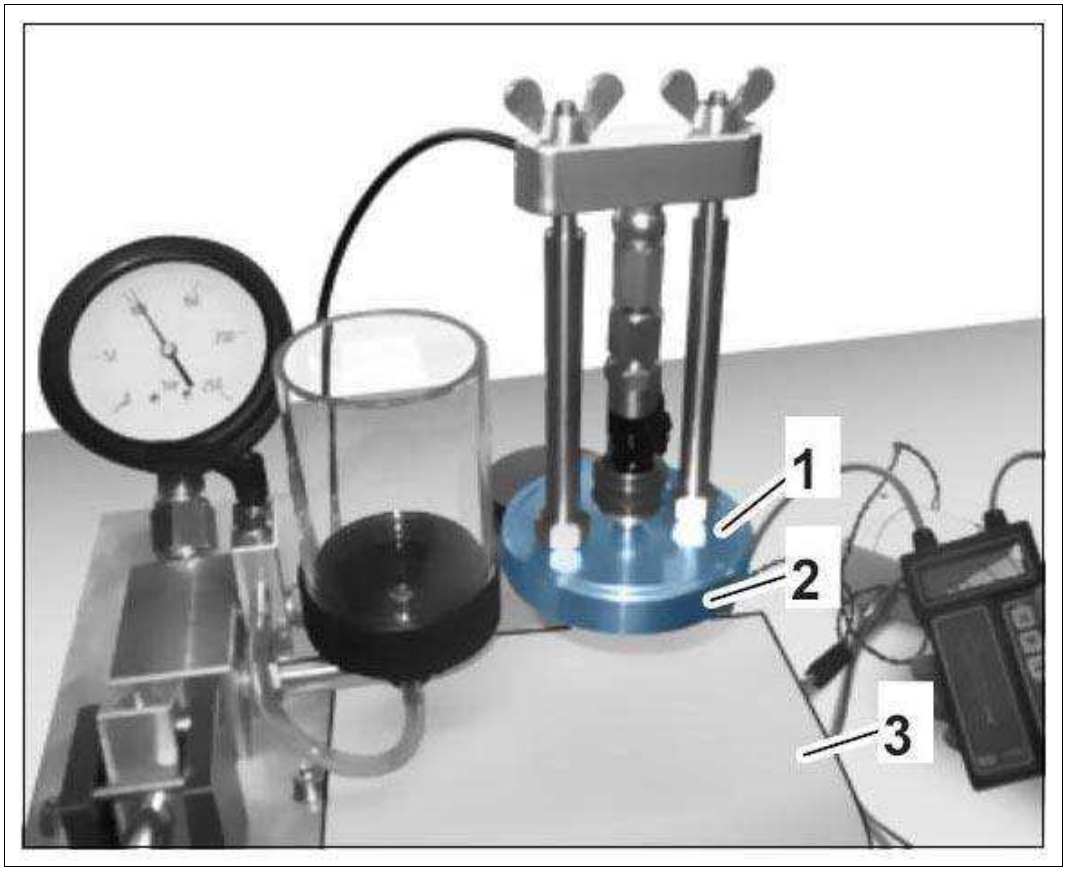

Courtesy of PORSCHE CARS NORTH AMERICA, INC.

15. Check the spray pattern of the fuel injector.

1. 15.1. Press **"Enter"** on the control mechanism to confirm.

2. 15.2. **Example of multi-port injector:**

Fig 9: Checking Spray Pattern

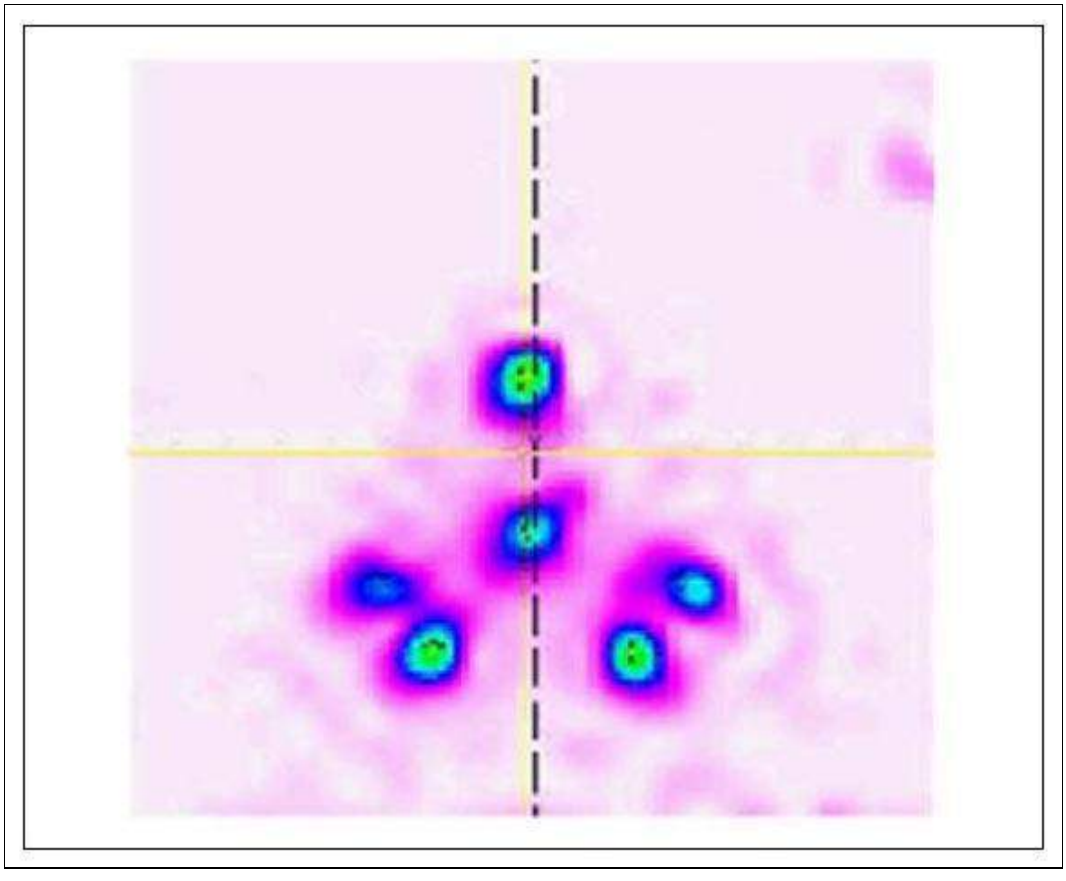

Courtesy of PORSCHE CARS NORTH AMERICA, INC.

3. 15.3. **Example of single-port injector:**

Fig 10: Identifying Spray Pattern Of Single-Port Injector

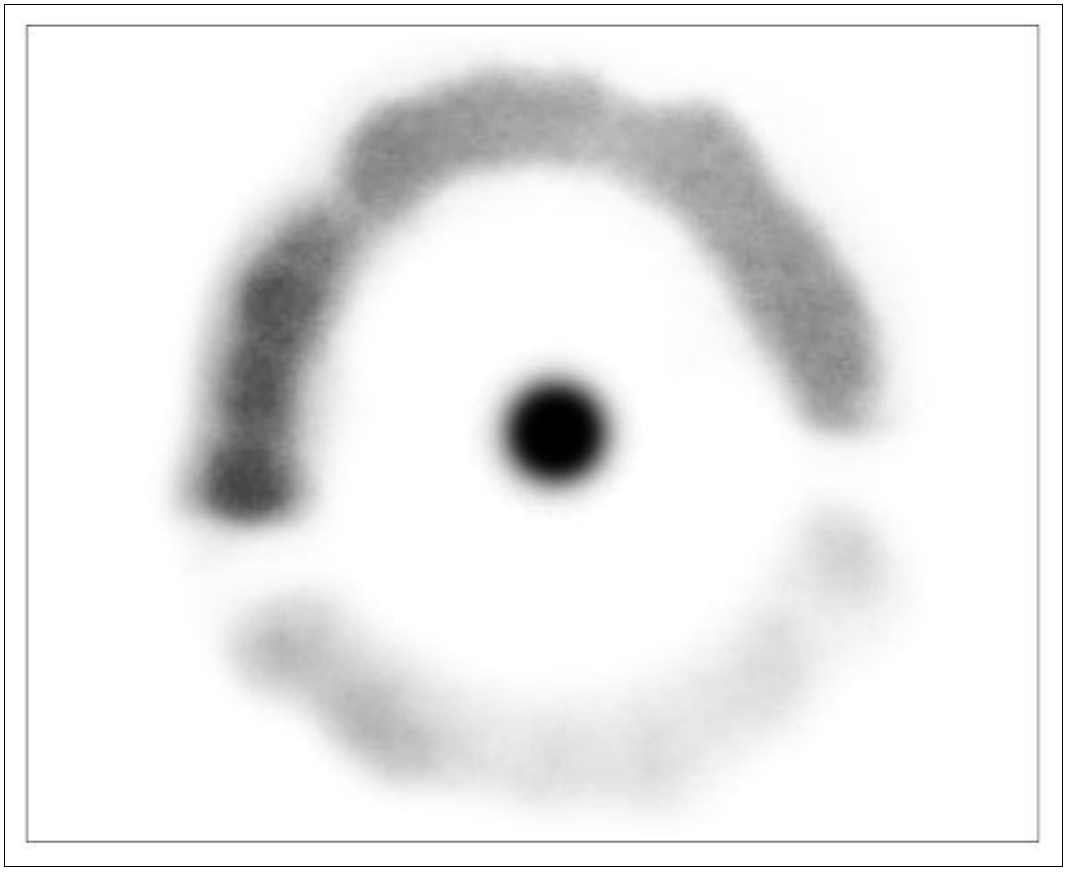

Courtesy of PORSCHE CARS NORTH AMERICA, INC.

16. If the spray pattern differs from the required pattern even after cleaning the injector one or more times, replace the fuel injector.

    Prerequisite: The fuel injectors will only work perfectly if fuel of the prescribed quality is used!

WM 244001 CHECKING FUEL INJECTOR (EXCEPT CARRERA "EDITION", CARRERA CABRIOLET "EDITION", CARRERA 4 "EDITION", CARRERA 4 CABRIOLET "EDITION", GT3, GT3 RS) > SUBSEQUENT WORK

WARNING: Highly inflammable or explosive materials

- *Danger of fire or explosion*

→ Avoid contact with hot parts or sources of ignition.

→ Use suction to remove ignitable vapors.

→ Attach warning sign in a clearly visible position.

1. Install fuel collection pipe with fuel injectors.

→ 243019 REMOVING AND INSTALLING FUEL COLLECTION PIPE WITH FUEL INJECTORS .

2. Perform a leak test in the high-pressure system.

→ 200101 CHECKING FUEL SYSTEM (HIGH-PRESSURE SIDE) FOR LEAKS .

WM 244019 REMOVING AND INSTALLING FUEL INJECTOR (EXCEPT CARRERA "EDITION", CARRERA CABRIOLET "EDITION", CARRERA 4 "EDITION", TARGA 4, TARGA 4S, TARGA 4 GTS, CARR. 4 CABRIO, CARR. 4S CABRIO, TURBO CABRIO, CARR. 4 GTS CABRIO, TURBO S CABRIO, CARRERA 4 CABRIOLET "EDITION") > TOOLS

Designation	Type	Number	Description
repair kit	VW tool	T10133	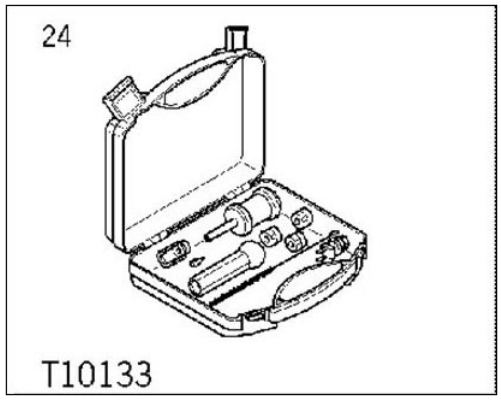

WM 244019 REMOVING AND INSTALLING FUEL INJECTOR (EXCEPT CARRERA "EDITION", CARRERA CABRIOLET "EDITION", CARRERA 4 "EDITION", TARGA 4, TARGA 4S, TARGA 4 GTS, CARR. 4 CABRIO, CARR. 4S CABRIO, TURBO CABRIO, CARR. 4 GTS CABRIO, TURBO S CABRIO, CARRERA 4 CABRIOLET "EDITION") > PRELIMINARY WORK

WARNING: Highly inflammable or explosive materials

- *Danger of fire or explosion*

→ Avoid contact with hot parts or sources of ignition.

→ Use suction to remove ignitable vapors.

→ Attach warning sign in a clearly visible position.

1. Place or hang a warning sign in a clearly visible position in the work area or on the vehicle.

Fig 1: Example Of Warning Sign

Courtesy of PORSCHE CARS NORTH AMERICA, INC.

2. Remove fuel collection pipe.

   → 243019 REMOVING AND INSTALLING FUEL COLLECTION PIPE .

3. Spray fuel injector seats in the cylinder head with Caramba EDI special solvent for injectors, for example, and leave it to take effect.

WM 244019 REMOVING AND INSTALLING FUEL INJECTOR (EXCEPT CARRERA "EDITION", CARRERA CABRIOLET "EDITION", CARRERA 4 "EDITION", TARGA 4, TARGA 4S, TARGA 4 GTS, CARR. 4 CABRIO, CARR. 4S CABRIO, TURBO CABRIO, CARR. 4 GTS CABRIO, TURBO S CABRIO, CARRERA 4 CABRIOLET "EDITION") > REMOVING FUEL INJECTOR

WARNING: Highly inflammable or explosive materials

- *Danger of fire or explosion*

→ Avoid contact with hot parts or sources of ignition.

→ Use suction to remove ignitable vapors.

→ Attach warning sign in a clearly visible position.

> *NOTE: Dirt on injection system components*
>
> - *Material damage*
> - *Rough-running engine*
> - *Bad exhaust emissions*

→ Thoroughly clean connection points and adjacent areas before loosening them. If the engine is very dirty, wash it before starting disassembly work.

→ Lay removed parts on a clean surface and cover them. Do not use fibre-shedding cloths.

→ Carefully cover components or seal them if repair work will not be carried out immediately. Place rubber caps on connections. Seal intake openings with film or adhesive tape.

→ Only install clean parts. Do not take spare parts out of the packaging until just before installation.

→ Never use compressed air when the system is open. Do not move the vehicle.

Information

The procedure for pulling out the fuel injectors is described using the tools from the repair kit T10133 .

1. Remove spring clamp **-2-** on the fuel injector **-1-** .

Fig 1: Identifying Spring Clamps On Fuel Injector

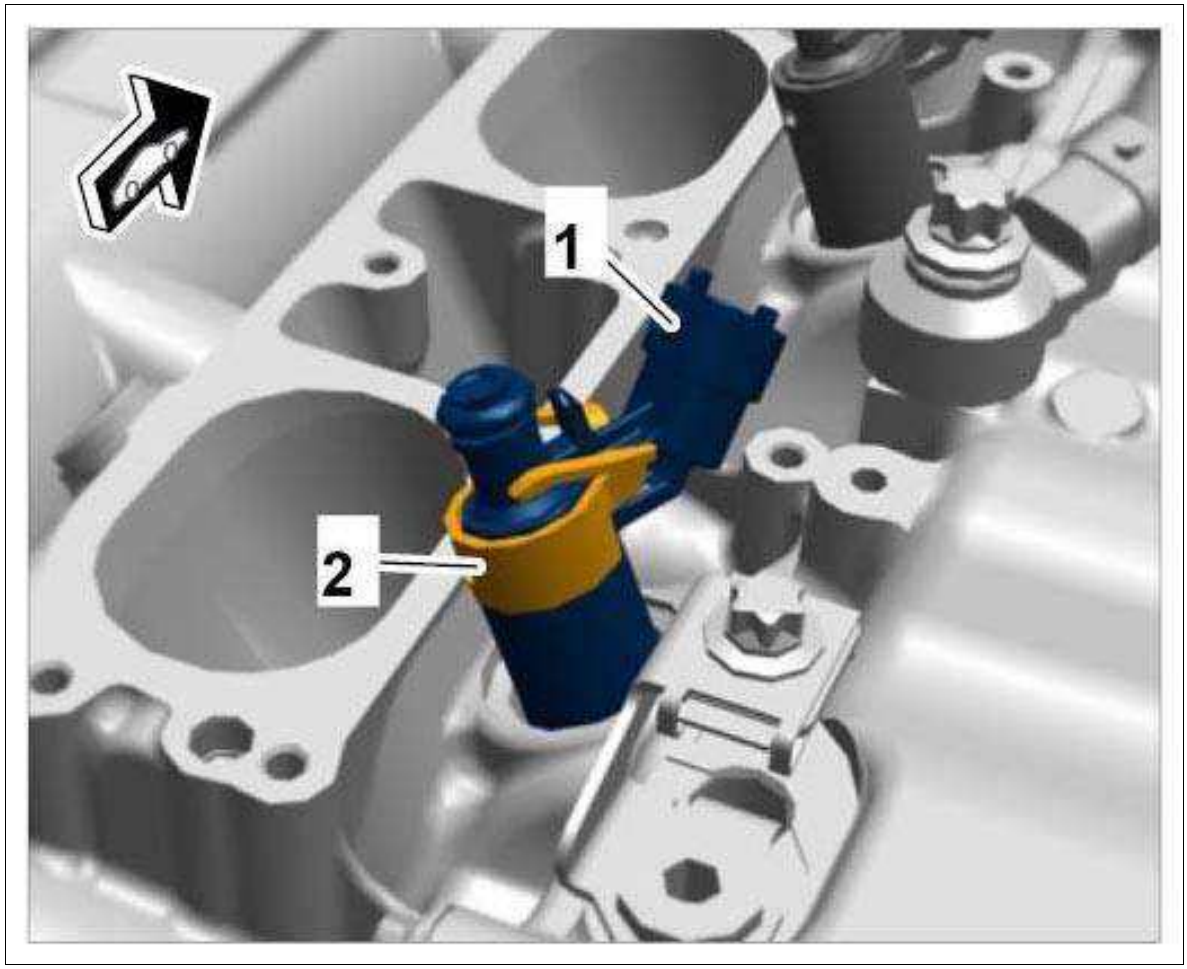

Courtesy of PORSCHE CARS NORTH AMERICA, INC.

2. **Push adapter T10133/2A -2-** onto the fuel injector **-1-** .

Fig 2: Positioning Adapter T10133/2A On Fuel Injector

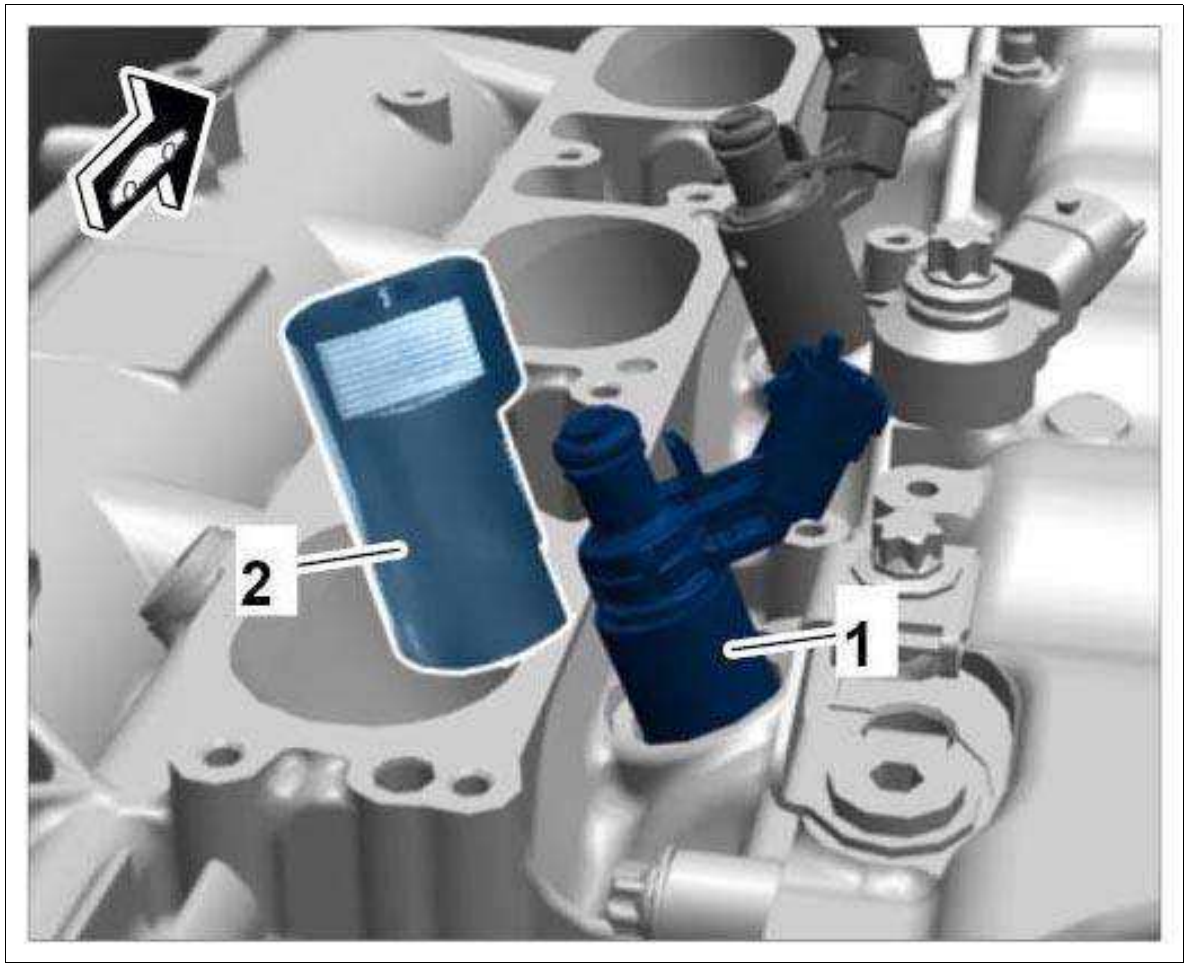

Courtesy of PORSCHE CARS NORTH AMERICA, INC.

3. Pull fuel injector out of the cylinder head using **puller T10133/3** .

Fig 3: Pulling Fuel Injector

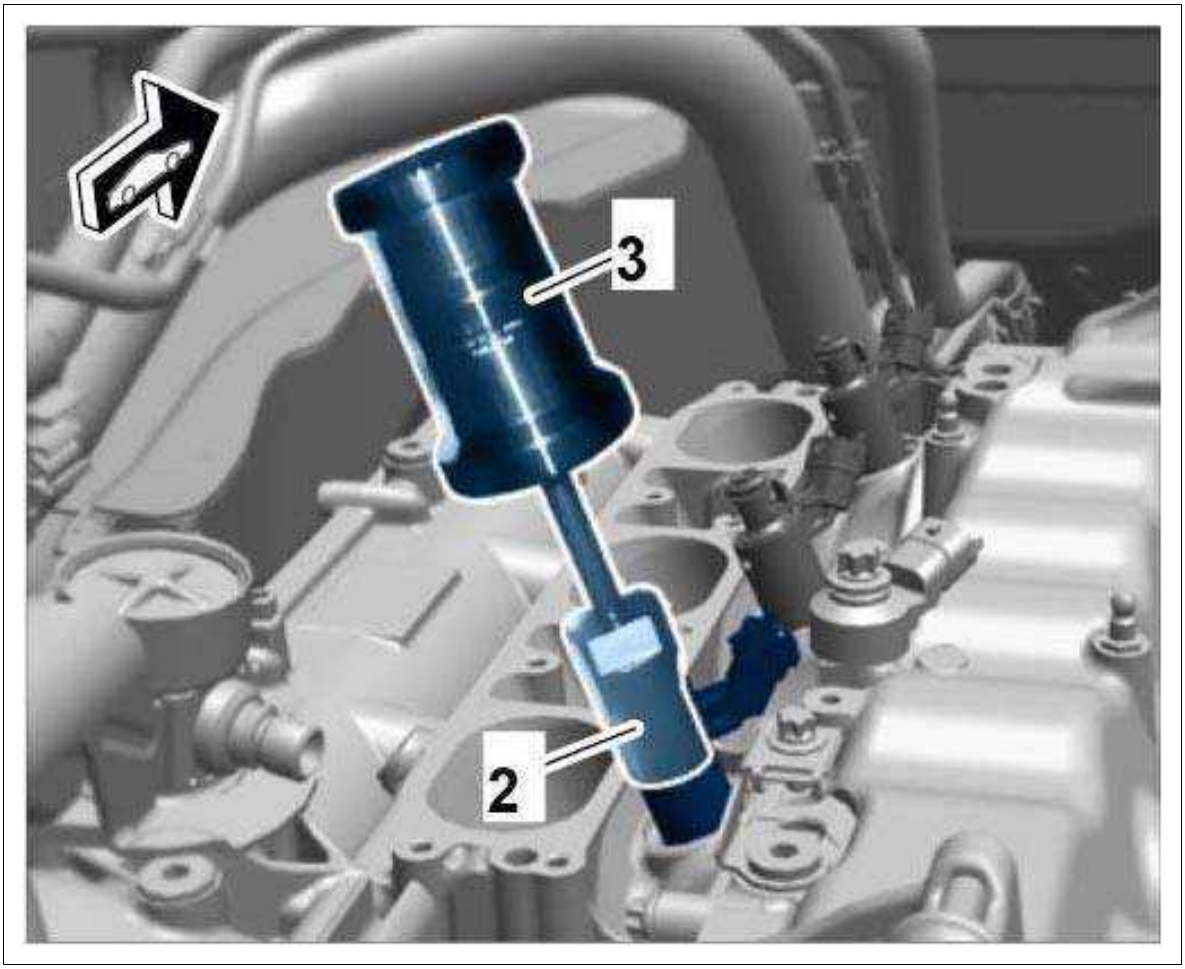

Courtesy of PORSCHE CARS NORTH AMERICA, INC.

4. Carefully clean the take-up bore in the cylinder head.

WM 244019 REMOVING AND INSTALLING FUEL INJECTOR (EXCEPT CARRERA "EDITION", CARRERA CABRIOLET "EDITION", CARRERA 4 "EDITION", TARGA 4, TARGA 4S, TARGA 4 GTS, CARR. 4 CABRIO, CARR. 4S CABRIO, TURBO CABRIO, CARR. 4 GTS CABRIO, TURBO S CABRIO, CARRERA 4 CABRIOLET "EDITION") > REMOVING FUEL INJECTOR > CLEANING FUEL INJECTORS AND REPLACING WEARING PARTS

Information

- When removing and installing the fuel injectors, the following components must always be replaced to guarantee function and leak-tightness.
- O-ring, spring clamp and Teflon sealing ring. Parts are available as a repair kit.
- Tools: Repair kit T10133

Information

- Grease new O-rings on the fuel injector with a light coating of assembly grease VP 881 (Part No.

000.043.207.35).

Component overview:

1. Spring clamp - replace
2. O-ring - replace and grease with VP 881
3. Fuel injector - follow cleaning instructions!
4. Spacer ring
5. Stainless steel circlip - replace
6. Teflon sealing ring - replace

Fig 1: Overview Of Fuel Injector Components

Courtesy of PORSCHE CARS NORTH AMERICA, INC.

1. Grip Teflon sealing ring **-1-** carefully using pointed-nose pliers **-2-** and pull it off. Do not scratch the valve body.

    1. 1.1. Scratched valves must be replaced.

Fig 2: Removing Teflon Sealing Ring

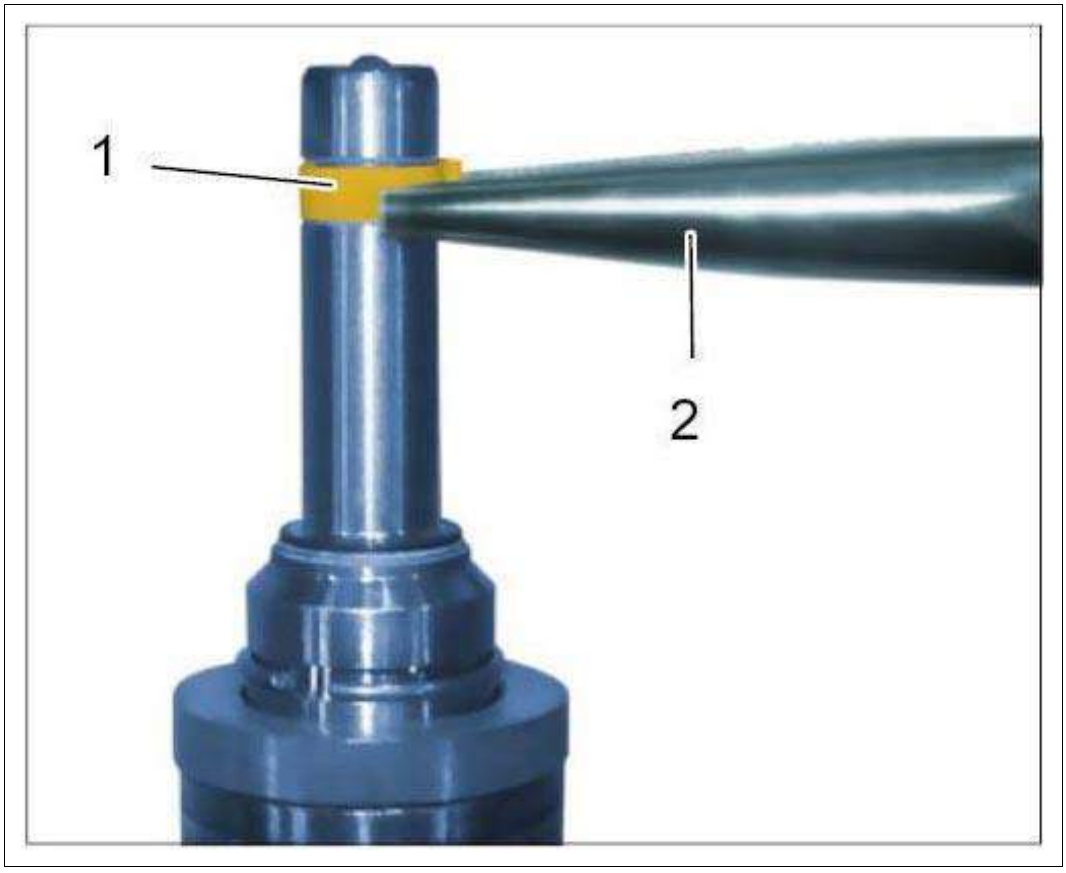

Courtesy of PORSCHE CARS NORTH AMERICA, INC.

2. When re-installing the fuel injectors, they must be cleaned as described below:

> *WARNING: Caustic fluids*
>
> *1. Danger of chemical burns*

→ Avoid contact with caustic fluid.

→ Wear personal protective gear.

→ Ensure that there is good ventilation.

→ If you do come into contact, wash off immediately with plenty of warm water and contact a doctor if necessary.

Cleaning if lightly soiled:

3. Clean valve tips using a soft, lint-free cloth with acetone or solvent naphtha.

    1. 3.1. Also clean sealing ring groove.

    Cleaning if heavily soiled:

4. Clean valve tips in an ultrasound bath. This allows even stubborn deposits (coking) to be

removed.

1. 4.1. Plunge just the metal insert into the cleaning fluid, holding it as vertically as possible. Cover electric connection with adhesive tape.

5. Replace O-ring and bellows.

6. Fit new Teflon sealing ring **-2-** onto the mounting cone **-1-** from the **repair kit T10133** .

1. 6.1. Push sealing ring onto the cylinder of the mounting cone by hand and move it to the very end **-item 3-** .

Fig 3: Pushing Teflon Ring

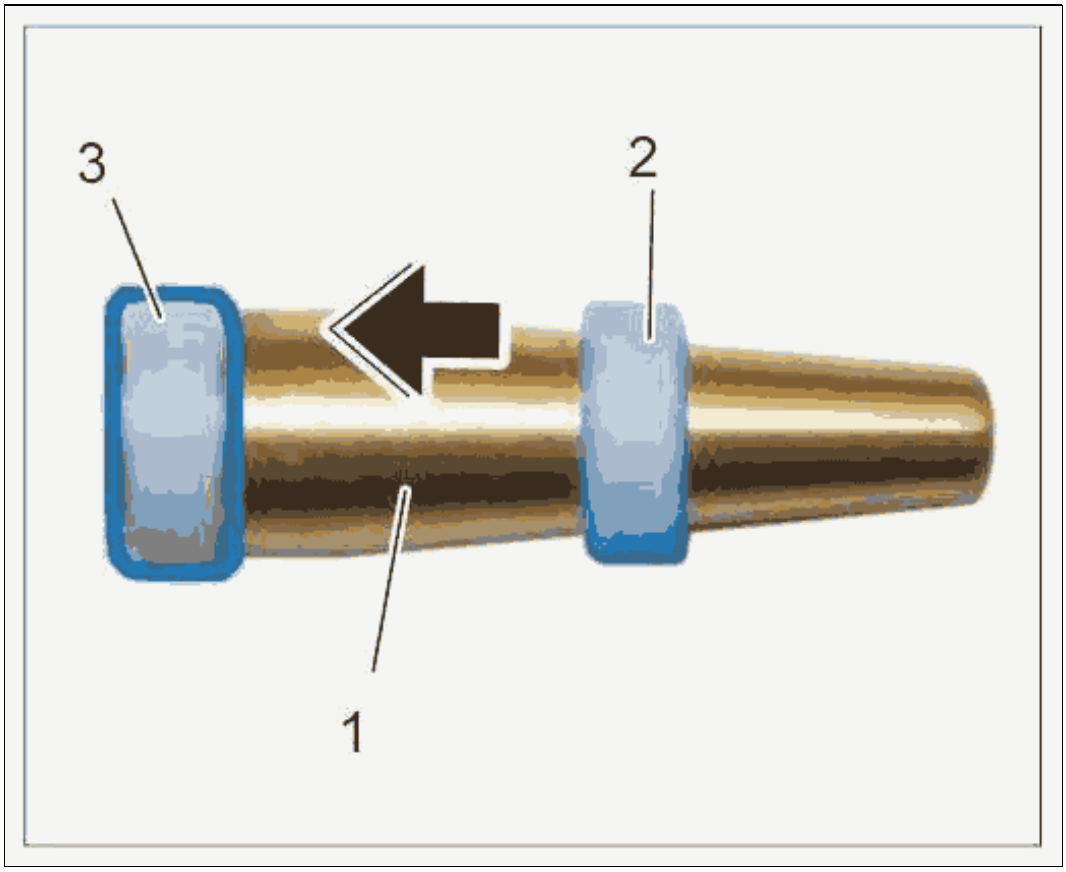

Courtesy of PORSCHE CARS NORTH AMERICA, INC.

7. Fit mounting cone **-3-** with sealing ring **-1-** onto the fuel injector from the front.

1. 7.1. Use **assembly sleeve T10133/8 -2-** to push the sealing ring over the injector tip as far as the groove **-arrow-** .

2. 7.2. **The sealing ring is not yet seated correctly in the groove!**

Fig 4: Positioning Teflon Sealing Ring

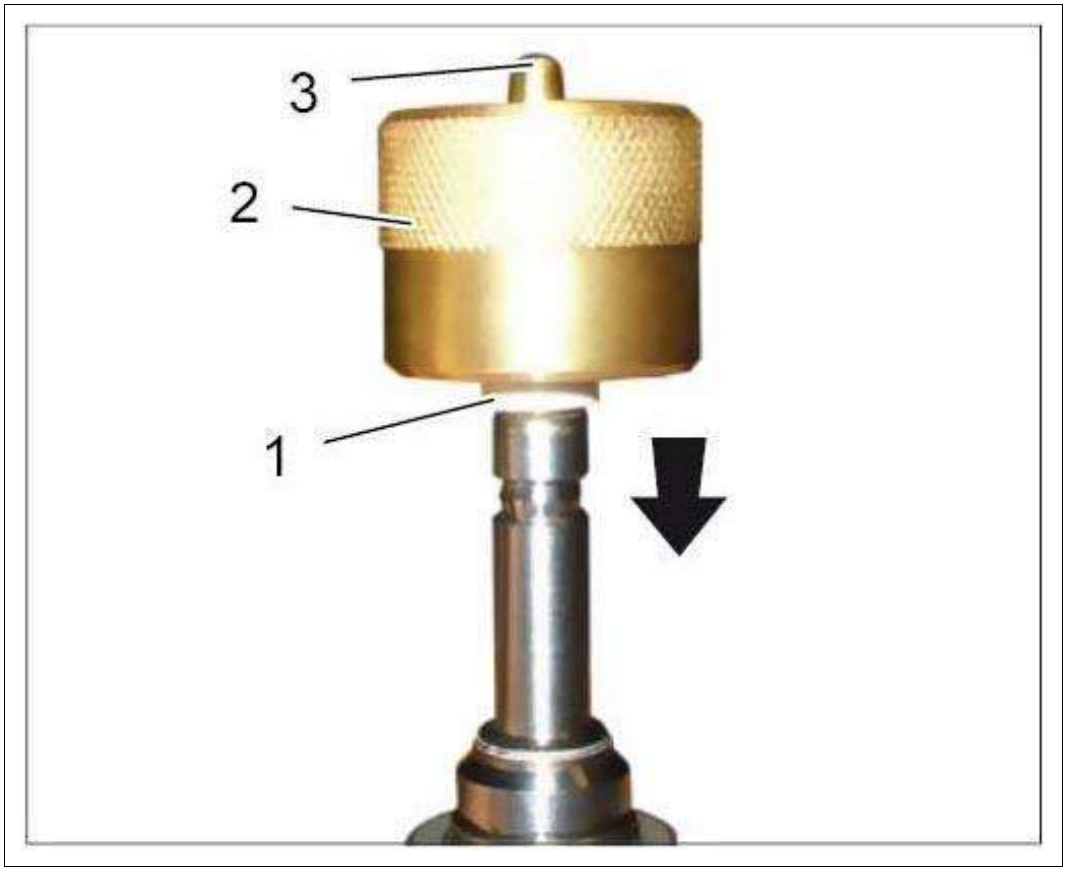

Courtesy of PORSCHE CARS NORTH AMERICA, INC.

8. Remove assembly sleeve and mounting cone. Align sealing ring in the ring groove.

    1. 8.1. Slide assembly sleeve **-2-** as far as the ring groove **-arrow-** and join the sealing ring **-1-** to the bore of the assembly sleeve by hand.

Fig 5: Sliding Sealing Ring Into Ring Groove

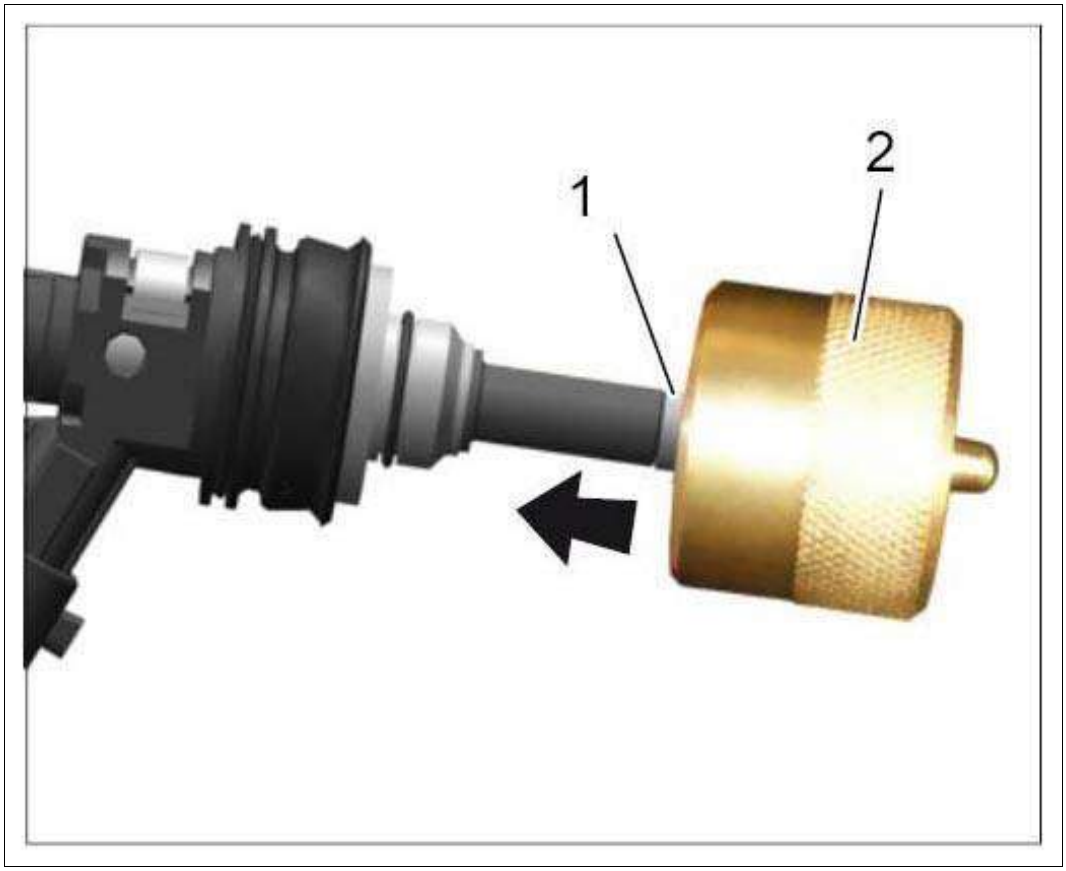

Courtesy of PORSCHE CARS NORTH AMERICA, INC.

9. **Calibrating Teflon sealing ring:**

1. 9.1. Slide assembly sleeve **-1-** as far as it will go over the sealing ring **-arrow-** .
2. 9.2. **Leave tool on the sealing ring for one minute.**
3. 9.3. Pull off tool again.

   The Teflon sealing ring now has the correct installation dimension.
4. 9.4. The calibrating sleeve (transport protection on new injectors) **-2-** must remain fitted until the injector is installed.

Fig 6: Fitting Calibrating Sealing Ring Assembly Sleeve

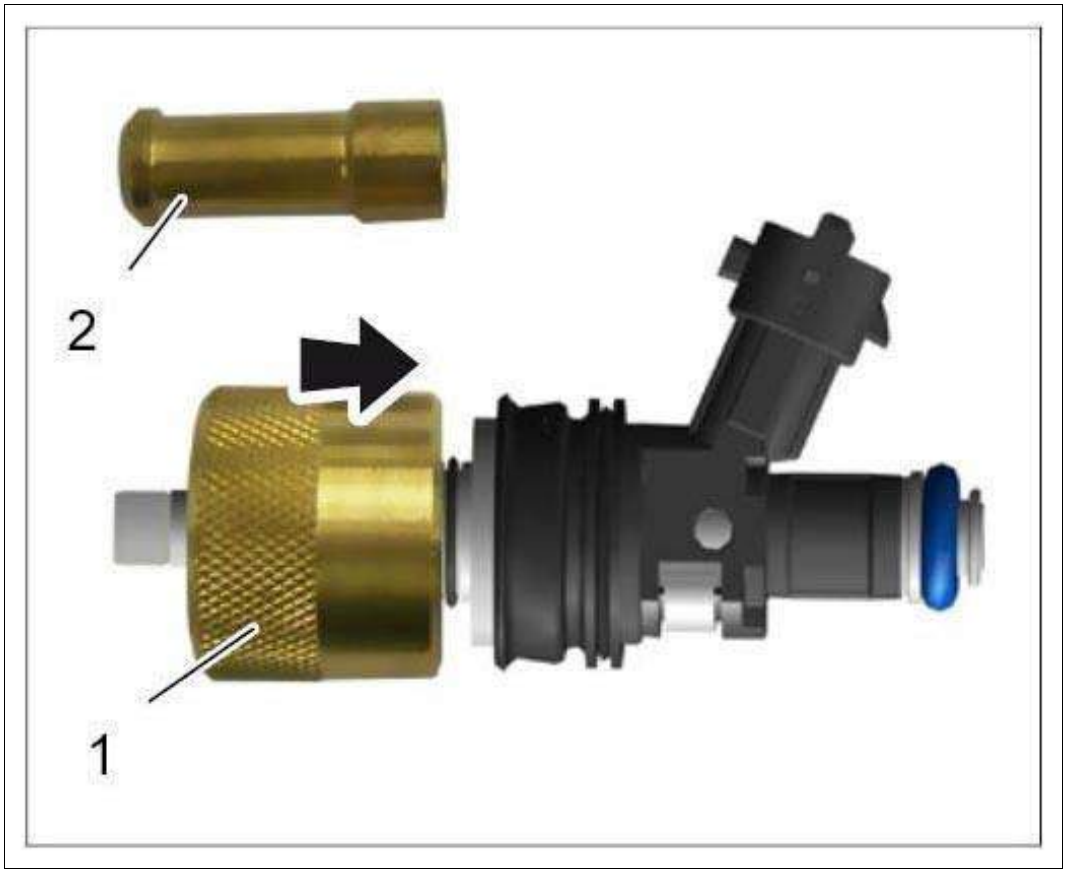

Courtesy of PORSCHE CARS NORTH AMERICA, INC.

10. Install the fuel injector immediately, as the Teflon sealing ring will soon start to swell.

    1. 10.1. Do not pull off the calibrating sleeve until just before installation.

       If you do, the Teflon ring will lose its shape and will be compressed when installed. This would result in leaks.

    2. 10.2. Fit and align all three valves in the fuel collection pipe before re-installing the fuel collection pipe.

WM 244019 REMOVING AND INSTALLING FUEL INJECTOR (EXCEPT CARRERA "EDITION", CARRERA CABRIOLET "EDITION", CARRERA 4 "EDITION", TARGA 4, TARGA 4S, TARGA 4 GTS, CARR. 4 CABRIO, CARR. 4S CABRIO, TURBO CABRIO, CARR. 4 GTS CABRIO, TURBO S CABRIO, CARRERA 4 CABRIOLET "EDITION") > INSTALLING FUEL INJECTOR

1. Insert fuel injector into the cylinder head and align it.

WM 244019 REMOVING AND INSTALLING FUEL INJECTOR (EXCEPT CARRERA "EDITION", CARRERA CABRIOLET "EDITION", CARRERA 4 "EDITION", TARGA 4, TARGA 4S, TARGA 4 GTS, CARR. 4 CABRIO, CARR. 4S CABRIO, TURBO CABRIO, CARR. 4 GTS CABRIO, TURBO S CABRIO, CARRERA 4 CABRIOLET "EDITION") >

SUBSEQUENT WORK

> *WARNING: Highly inflammable or explosive materials*
>
> - *Danger of fire or explosion*

→ Avoid contact with hot parts or sources of ignition.

→ Use suction to remove ignitable vapors.

→ Attach warning sign in a clearly visible position.

1. Install fuel collection pipe.

   → Installing Fuel Collection Pipe .

WM 244219 REMOVING AND INSTALLING THROTTLE HOUSING (EXCEPT CARRERA "EDITION", CARRERA CABRIOLET "EDITION", CARRERA 4 "EDITION", CARRERA 4 CABRIOLET "EDITION", GT3 RS) > TECHNICAL VALUES

Location	Description	Type	Basic value	Tolerance 1	Tolerance 2
Throttle housing to resonance tube	External Torx screw, M6 x 50	Tightening torque	10 Nm (7.5 ftlb.)		

WM 244219 REMOVING AND INSTALLING THROTTLE HOUSING (EXCEPT CARRERA "EDITION", CARRERA CABRIOLET "EDITION", CARRERA 4 "EDITION", CARRERA 4 CABRIOLET "EDITION", GT3 RS) > PRELIMINARY WORK

1. Remove air cleaner housing.

   → 242519 REMOVING AND INSTALLING AIR CLEANER HOUSING .

WM 244219 REMOVING AND INSTALLING THROTTLE HOUSING (EXCEPT CARRERA "EDITION", CARRERA CABRIOLET "EDITION", CARRERA 4 "EDITION", CARRERA 4 CABRIOLET "EDITION", GT3 RS) > REMOVING THROTTLE HOUSING

1. Removal:

   1. 1.1. Release and pull off cable plug **-1-** on the throttle housing and unclip cable **-arrow-** .
   2. 1.2. Unscrew four screws (M6 x 50) **-2-** and remove throttle housing.

Fig 1: Removing Throttle Housing On Resonance Tube

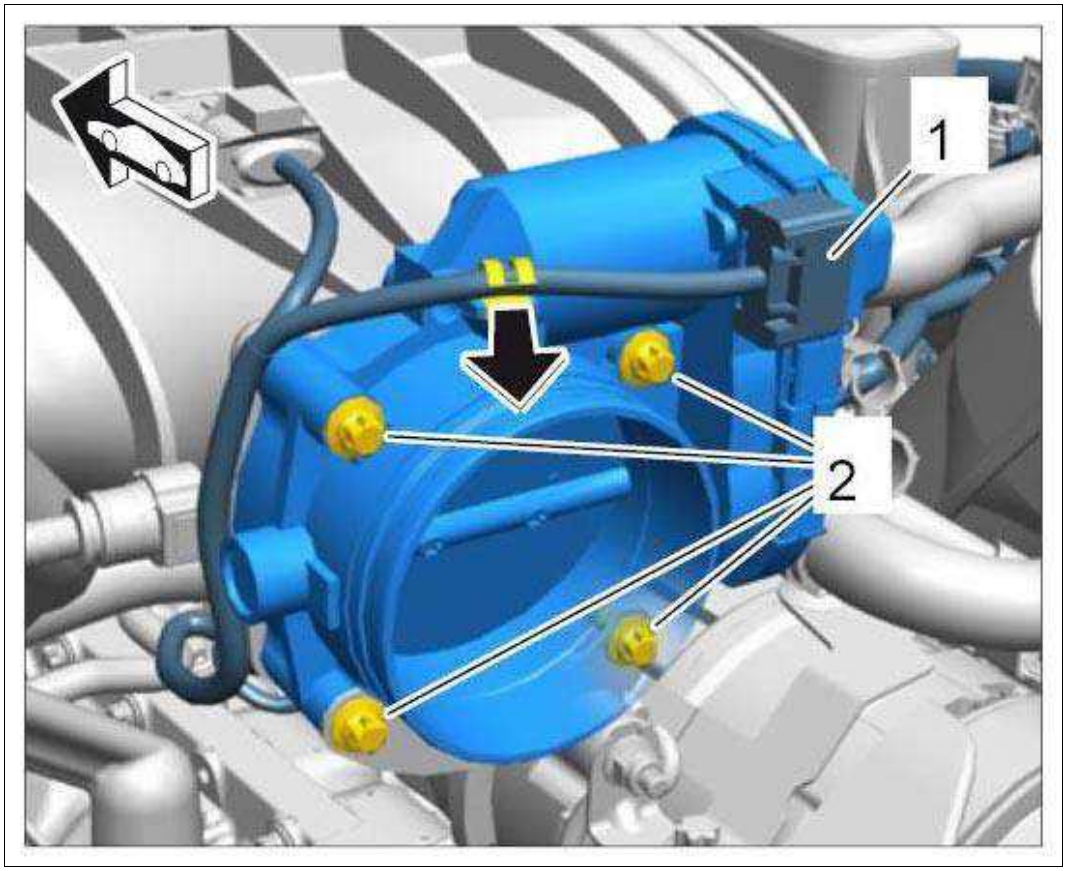

Courtesy of PORSCHE CARS NORTH AMERICA, INC.

2. Remove molded seal on the resonance tube flange and replace it.

WM 244219 REMOVING AND INSTALLING THROTTLE HOUSING (EXCEPT CARRERA "EDITION", CARRERA CABRIOLET "EDITION", CARRERA 4 "EDITION", CARRERA 4 CABRIOLET "EDITION", GT3 RS) > INSTALLING THROTTLE HOUSING

1. Grease molded seal with a light coating of Kluber Syntheso Glep (Part No. 000.043.204.68).
2. Position throttle housing and fit it using four screws (M6 x 50).
    1. 2.1. Tighten the screws.

    → **Tightening torque: 10 Nm (7.5 ftlb.)**

3. Fit cable plug on the throttle housing and clip cable into the sheetmetal holder.

WM 244219 REMOVING AND INSTALLING THROTTLE HOUSING (EXCEPT CARRERA "EDITION", CARRERA CABRIOLET "EDITION", CARRERA 4 "EDITION", CARRERA 4 CABRIOLET "EDITION", GT3 RS) > SUBSEQUENT WORK

1. Install air cleaner housing.

→ Installing Air Cleaner Housing .

WM 244601 CHECKING INTAKE-AIR DISTRIBUTOR FOR LEAKS (EXCEPT CARRERA "EDITION", CARRERA CABRIOLET "EDITION", CARRERA 4 "EDITION", CARRERA 4 CABRIOLET "EDITION", GT3, GT3 RS) > TOOLS

Designation	Type	Number	Description	
forcing devices	Special tool	9264		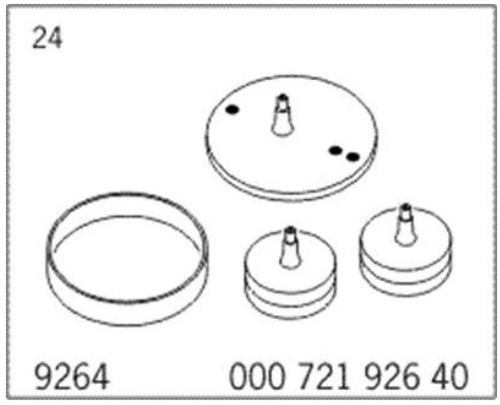

WM 244601 CHECKING INTAKE-AIR DISTRIBUTOR FOR LEAKS (EXCEPT CARRERA "EDITION", CARRERA CABRIOLET "EDITION", CARRERA 4 "EDITION", CARRERA 4 CABRIOLET "EDITION", GT3, GT3 RS) > PRELIMINARY WORK

1. Remove air cleaner housing.

   → 242519 REMOVING AND INSTALLING AIR CLEANER HOUSING .

1. Remove pressure pipe. → 214119 REMOVING AND INSTALLING PRESSURE PIPE

WM 244601 CHECKING INTAKE-AIR DISTRIBUTOR FOR LEAKS (EXCEPT CARRERA "EDITION", CARRERA CABRIOLET "EDITION", CARRERA 4 "EDITION", CARRERA 4 CABRIOLET "EDITION", GT3, GT3 RS) > TEST PROCEDURE > CHECKING INTAKE-AIR DISTRIBUTOR FOR LEAKS

Tools:

1. Rubber sleeve: Original Porsche part number 987.110.222.01
2. Special tool **forcing devices 9264** , part 3

Fig 1: Identifying Rubber Sleeve And Special Tool

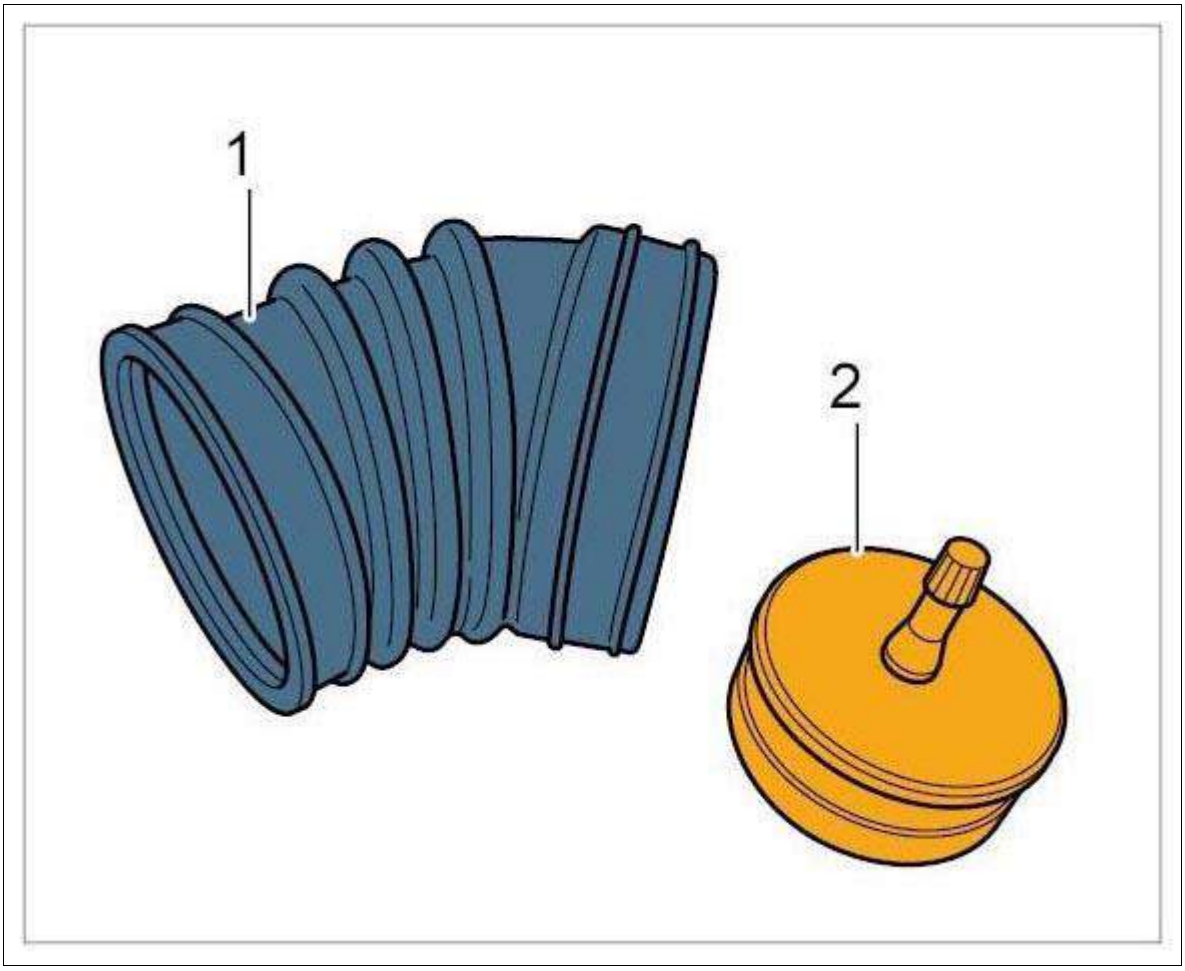

Courtesy of PORSCHE CARS NORTH AMERICA, INC.

1. Secure rubber sleeve **-1-** on the throttle housing with a screw-type clamp.

    1. 1.1. Insert forcing device **-2-** and secure by hand using a screw-type clamp.

Fig 2: Identifying Throttle Housing

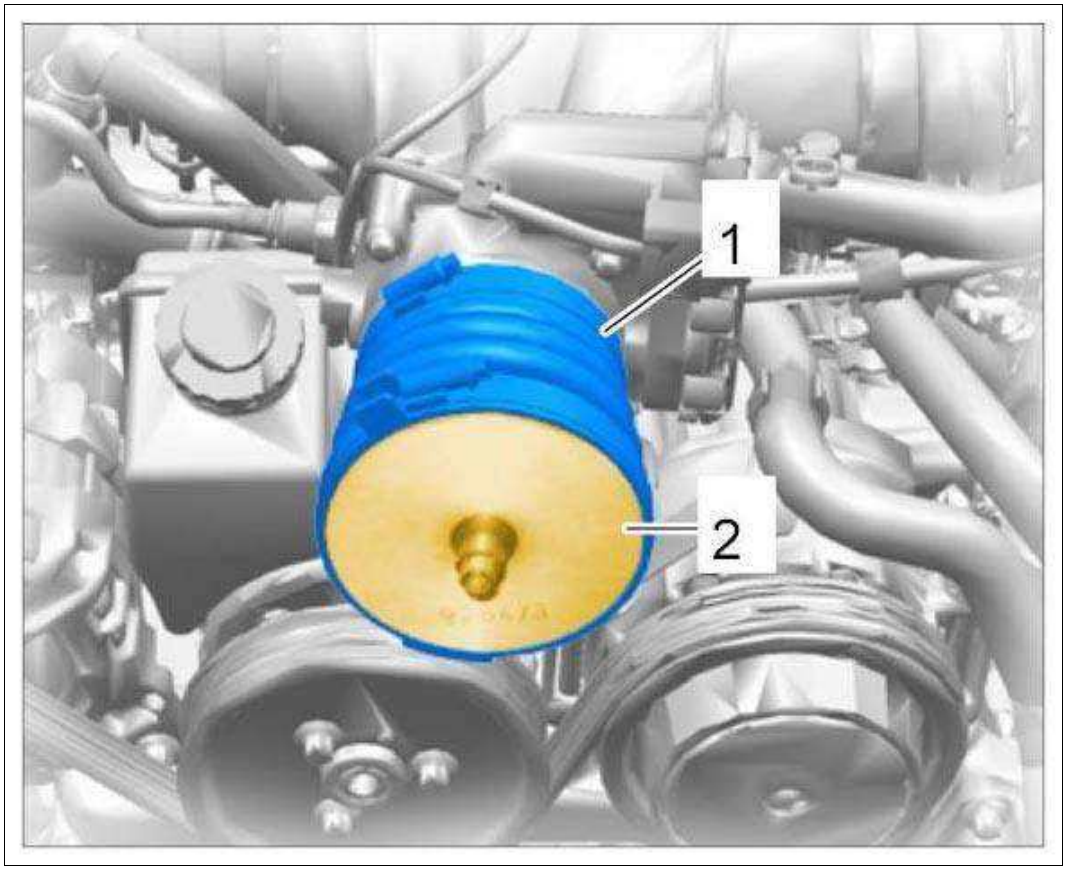

Courtesy of PORSCHE CARS NORTH AMERICA, INC.

2. Connect compressed air hose with pressure gauge to the valve.

    1. 2.1. **Build up overpressure of max. 0.8 bar in the intake system.**
    2. 2.2. Coat accessible sealing points with commercially available leak-locating spray (e.g. TEGA test spray TPS 674) to make it easier to locate leaks (bubbles).
    3. 2.3. Leaks at more difficult-to-reach joints can be detected by obvious air-leak sounds.

WM 244601 CHECKING INTAKE-AIR DISTRIBUTOR FOR LEAKS (EXCEPT CARRERA "EDITION", CARRERA CABRIOLET "EDITION", CARRERA 4 "EDITION", CARRERA 4 CABRIOLET "EDITION", GT3, GT3 RS) > TEST PROCEDURE > CHECKING INTAKE-AIR DISTRIBUTOR FOR LEAKS

Tools:

1. Rubber sleeve: Original Porsche part number 996.110.686.02
2. Special tool **forcing devices 9264** , part 6

Fig 1: Identifying Rubber Sleeve And Special Tool

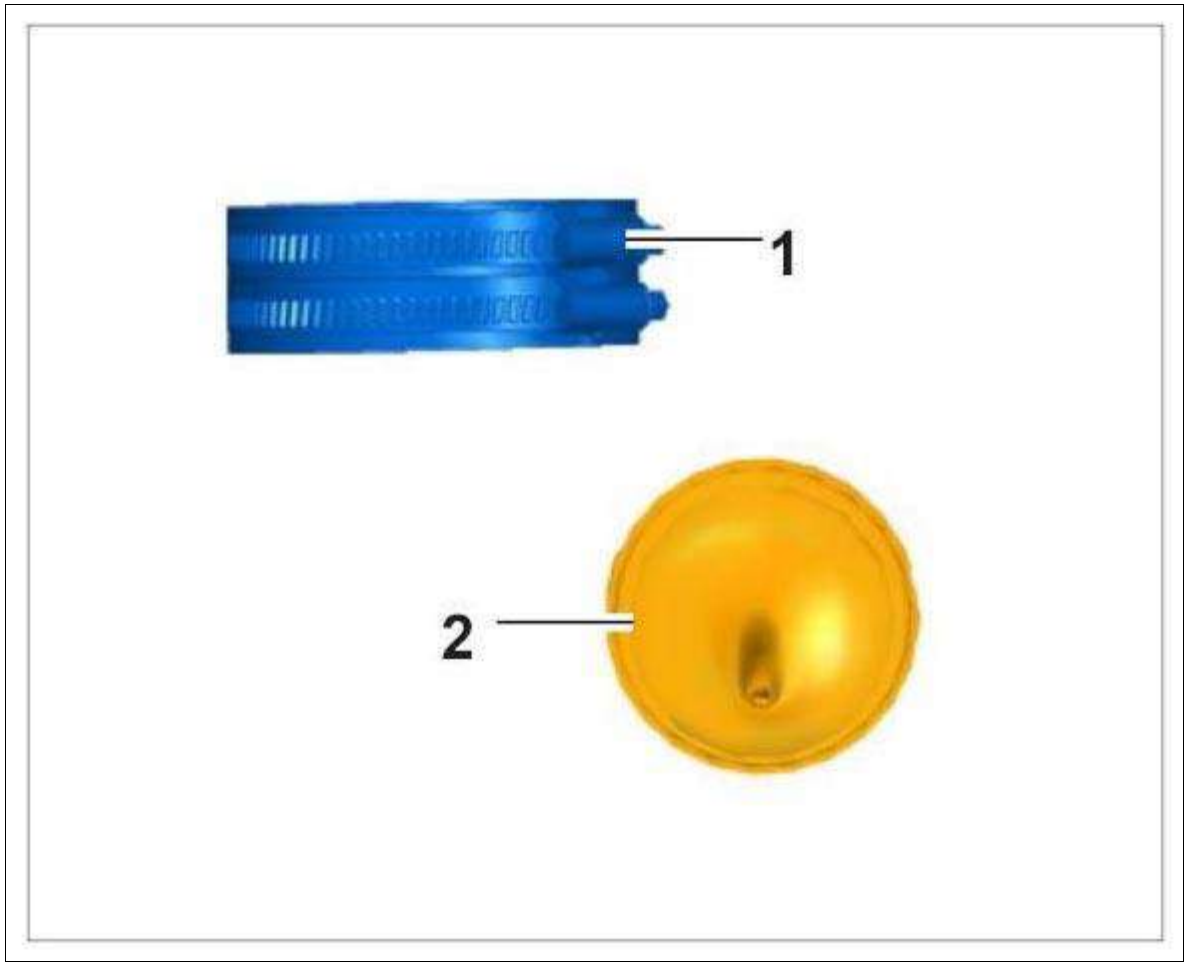

Courtesy of PORSCHE CARS NORTH AMERICA, INC.

1. Secure rubber sleeve **-1-** on the throttle housing with a screw-type clamp.

    1. 1.1. Insert forcing device **-2-** and secure by hand using a screw-type clamp.

Fig 2: Identifying Throttle Housing

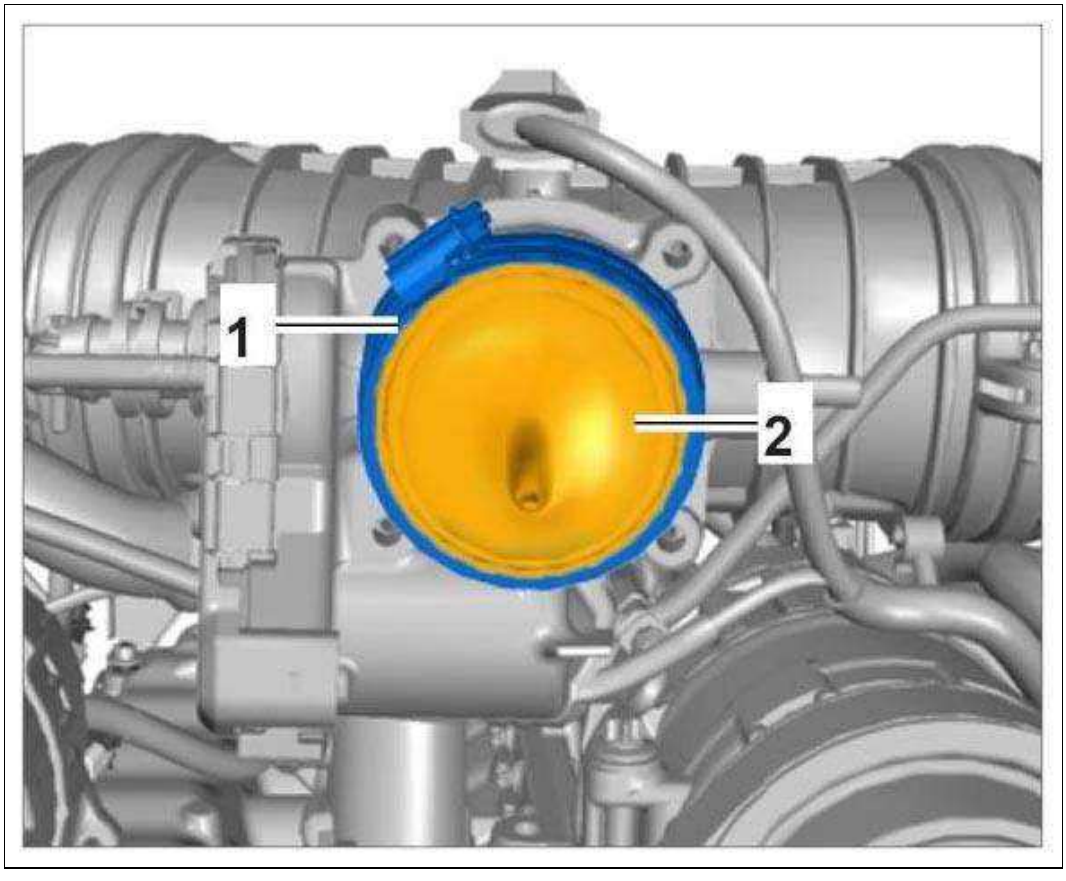

Courtesy of PORSCHE CARS NORTH AMERICA, INC.

2. Connect compressed air hose with pressure gauge to the valve.

    1. 2.1. **Build up overpressure of max. 0.8 bar in the intake system.**
    2. 2.2. Coat accessible sealing points with commercially available leak-locating spray (e.g. TEGA test spray TPS 674) to make it easier to locate leaks (bubbles).
    3. 2.3. Leaks at more difficult-to-reach joints can be detected by obvious air-leak sounds.

WM 244601 CHECKING INTAKE-AIR DISTRIBUTOR FOR LEAKS (EXCEPT CARRERA "EDITION", CARRERA CABRIOLET "EDITION", CARRERA 4 "EDITION", CARRERA 4 CABRIOLET "EDITION", GT3, GT3 RS) > SUBSEQUENT WORK

1. Install air cleaner housing.

   → Installing Air Cleaner Housing .

1. Install pressure pipe. → Installing Pressure Pipe

WM 244619 REMOVING AND INSTALLING INTAKE-AIR DISTRIBUTOR (EXCEPT CARRERA "EDITION", CARRERA CABRIOLET "EDITION", TURBO S, CARRERA 4 "EDITION", TURBO CABRIO, TURBO S CABRIO, CARRERA 4 CABRIOLET

"EDITION", GT3, GT3 RS) > PRELIMINARY WORK

1. Disconnect the battery.
2. Remove air cleaner housing.

   → 242519 REMOVING AND INSTALLING AIR CLEANER HOUSING .

   > *WARNING: Danger of objects or loads falling down*
   >
   > *1. Risk of squashing or crushing*

   → Secure components to prevent them from falling down.

   Information

   1. It may only be supported over a large area at the oil pan.
   2. Localized loading is not permitted.

3. Lower the engine.

   → 100109 LOWERING THE ENGINE .

   Information

   1. When lowering, the engine must not rest on the rear axle cross member.

4. Slowly lower the engine using the jack.
5. Remove resonance tube.

   → 247419 REMOVING AND INSTALLING RESONANCE TUBE .

6. Loosen fastening screws **-1-** used to secure the cable duct to the intake distributor.

Fig 1: Identifying Intake-Air Distributor Cable Duct And Fastening Screws

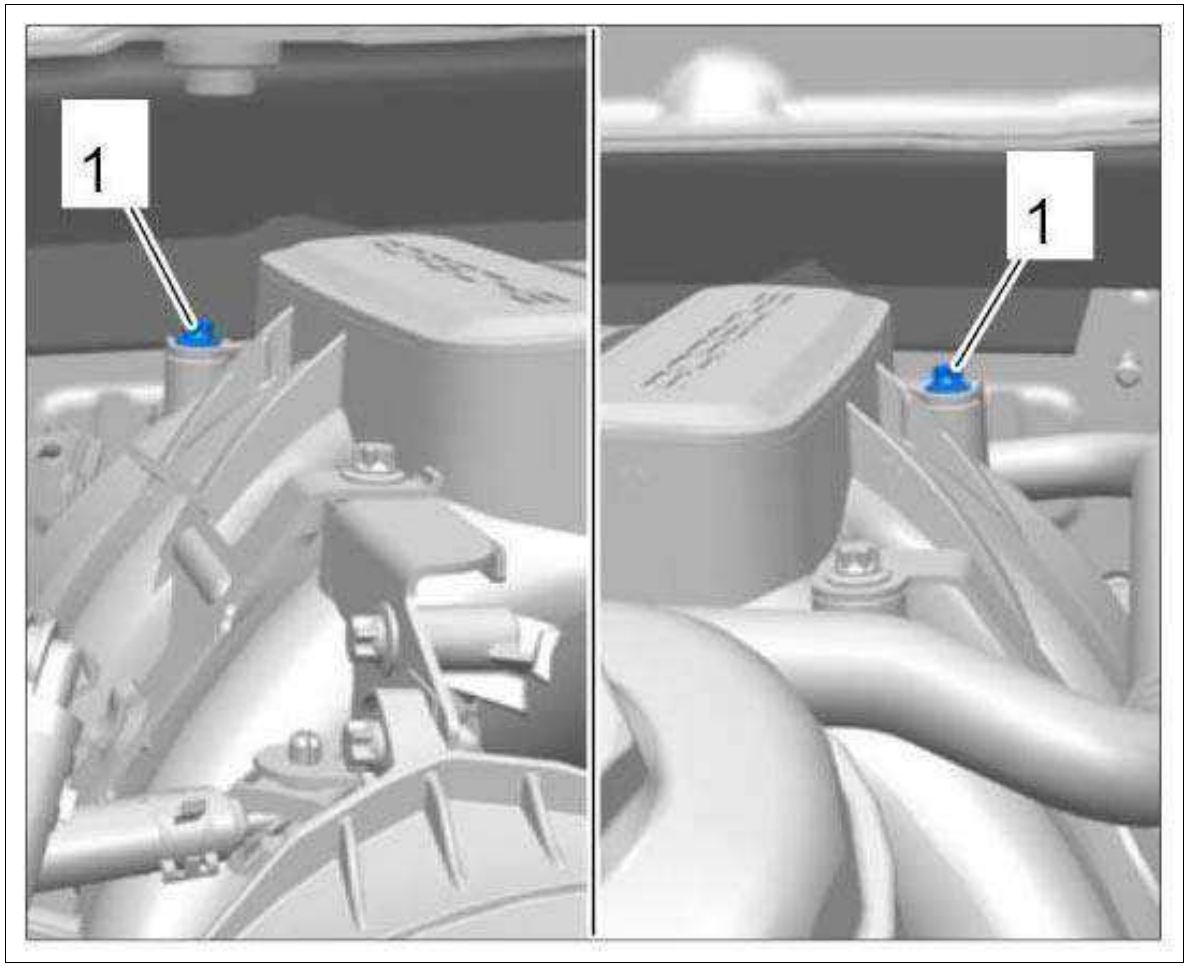

Courtesy of PORSCHE CARS NORTH AMERICA, INC.

WM 244619 REMOVING AND INSTALLING INTAKE-AIR DISTRIBUTOR (EXCEPT CARRERA "EDITION", CARRERA CABRIOLET "EDITION", TURBO S, CARRERA 4 "EDITION", TURBO CABRIO, TURBO S CABRIO, CARRERA 4 CABRIOLET "EDITION", GT3, GT3 RS) > INFORMATION > COMPONENT OVERVIEW FOR INTAKE-AIR DISTRIBUTOR

Component overview:

Fig 1: Overview Of Intake-Air Distributor Components

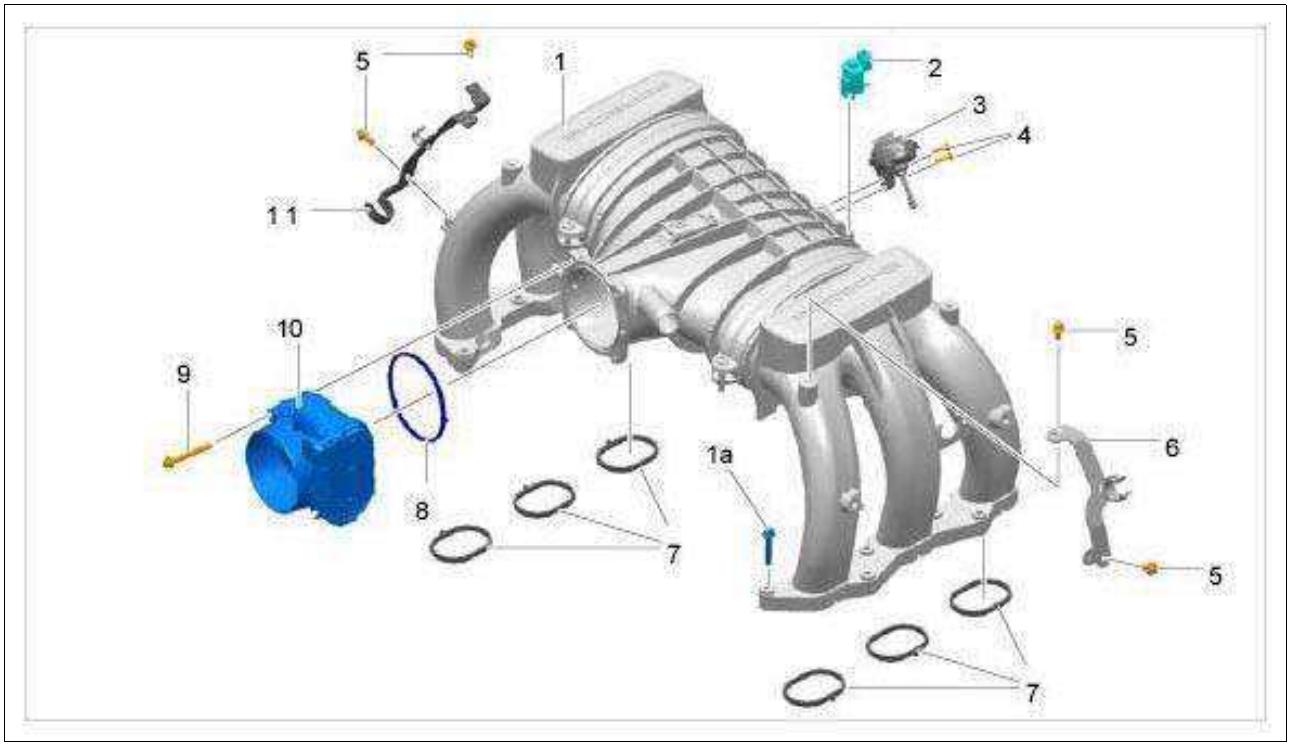

Courtesy of PORSCHE CARS NORTH AMERICA, INC.

1 - Intake-air distributor assembly

1a - External Torx screws (E10), M6 x 35 (six on each side)

2 - Electric control valve for tuning flap - 3.8-litre engine only

3 - Vacuum unit for tuning flap - 3.8-litre engine only

4 - Fastening screws for vacuum unit - observe tightening specifications when replacing tapping screw!

5 - External Torx screw (E10), M6 x 12

6 - Positive crankcase ventilation holder

7 - Molded sealing rings - always replace

8 - Molded seal for throttle housing - always replace

9 - External Torx screws (E10), M6 x 50

10 - Throttle housing

11 - Tank ventilation holder

WM 244619 REMOVING AND INSTALLING INTAKE-AIR DISTRIBUTOR (EXCEPT CARRERA "EDITION", CARRERA CABRIOLET "EDITION", TURBO S, CARRERA 4 "EDITION", TURBO CABRIO, TURBO S CABRIO, CARRERA 4 CABRIOLET "EDITION", GT3, GT3 RS) > REMOVING INTAKE-AIR DISTRIBUTOR 1-3

1. Release drive belt.

   → 137819 REMOVING AND INSTALLING DRIVE BELT .

2. Remove the generator.

   → 272219 REMOVING AND INSTALLING GENERATOR .

3. Remove tank vent valve.

   → 202319 REMOVING AND INSTALLING TANK VENT VALVE .

4. Pull engine compartment temperature sensor out of the bracket on the intake-air distributor and set it aside.

5. Remove holder **-1-** for oil filler pipe and coolant ventilation.

   1. 5.1. Unclip coolant ventilation line **-2-** .

   2. 5.2. Unscrew screws **-3 + 4-** and remove the holder.

      Fig 1: Identifying Oil Filler Pipe Holder On Intake-Air Distributor 1-3

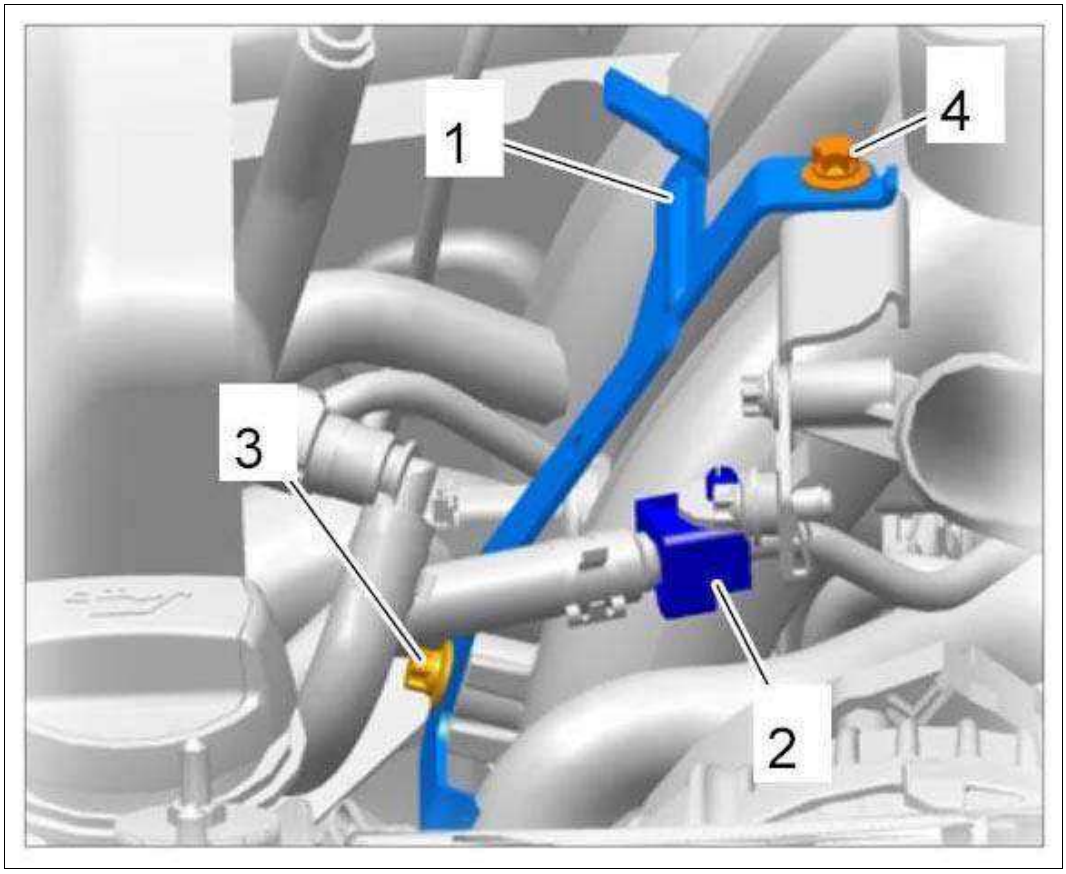

Courtesy of PORSCHE CARS NORTH AMERICA, INC.

6. Loosen intake-air distributor 1-3.

   1. 6.1. **Tool recommendation - 1/4 inch tool: ratchet, long extension, E10 Torx socket-wrench insert**

   2. 6.2. Unscrew six external Torx screws (E10, M6 x 35). Pull out the screws using a

bar magnet to ensure that they are not lost because of the poor accessibility in some areas.

7. Remove intake-air distributor 1-3 **-1-** over the oil filler pipe from the engine compartment.

Fig 2: Removing Intake-Air Distributor 1-3

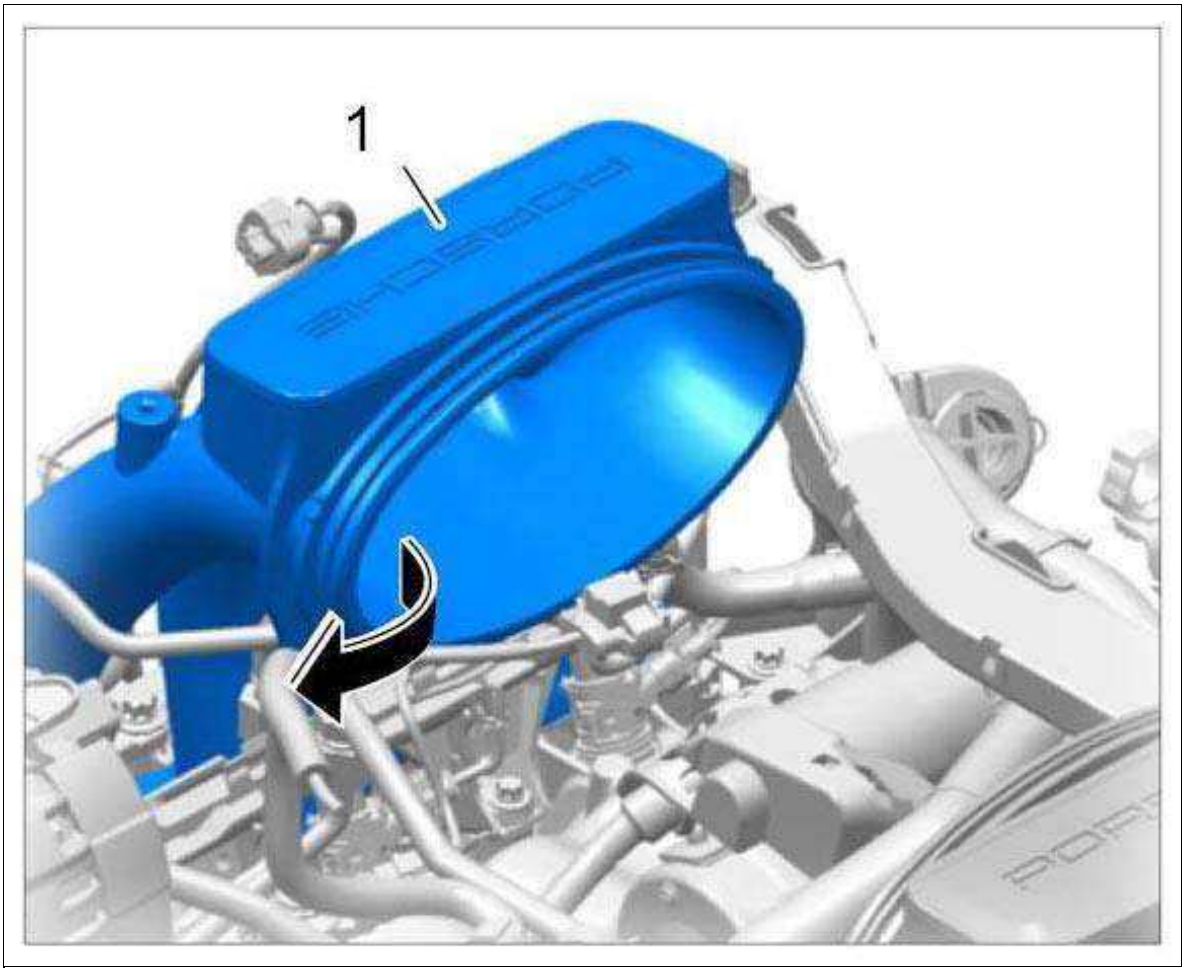

Courtesy of PORSCHE CARS NORTH AMERICA, INC.

8. Replace molded seals.
9. The intake-air distributor can be cleaned in a parts washing machine without aggressive cleaning agents.
10. Clean sealing faces on the cylinder head.

WM 244619 REMOVING AND INSTALLING INTAKE-AIR DISTRIBUTOR (EXCEPT CARRERA "EDITION", CARRERA CABRIOLET "EDITION", TURBO S, CARRERA 4 "EDITION", TURBO CABRIO, TURBO S CABRIO, CARRERA 4 CABRIOLET "EDITION", GT3, GT3 RS) > REMOVING INTAKE-AIR DISTRIBUTOR 1-3 > REMOVING INTAKE-AIR DISTRIBUTOR 4-6

1. Remove holder on intake-air distributor 1-6.
    1. 1.1. Unclip positive crankcase ventilation line **-1-** from the holder **-3-** on the intake-air distributor.

2. 1.2. Unscrew two screws **-2-** and remove the holder.

Fig 1: Identifying Positive Crankcase Ventilation Line Holder

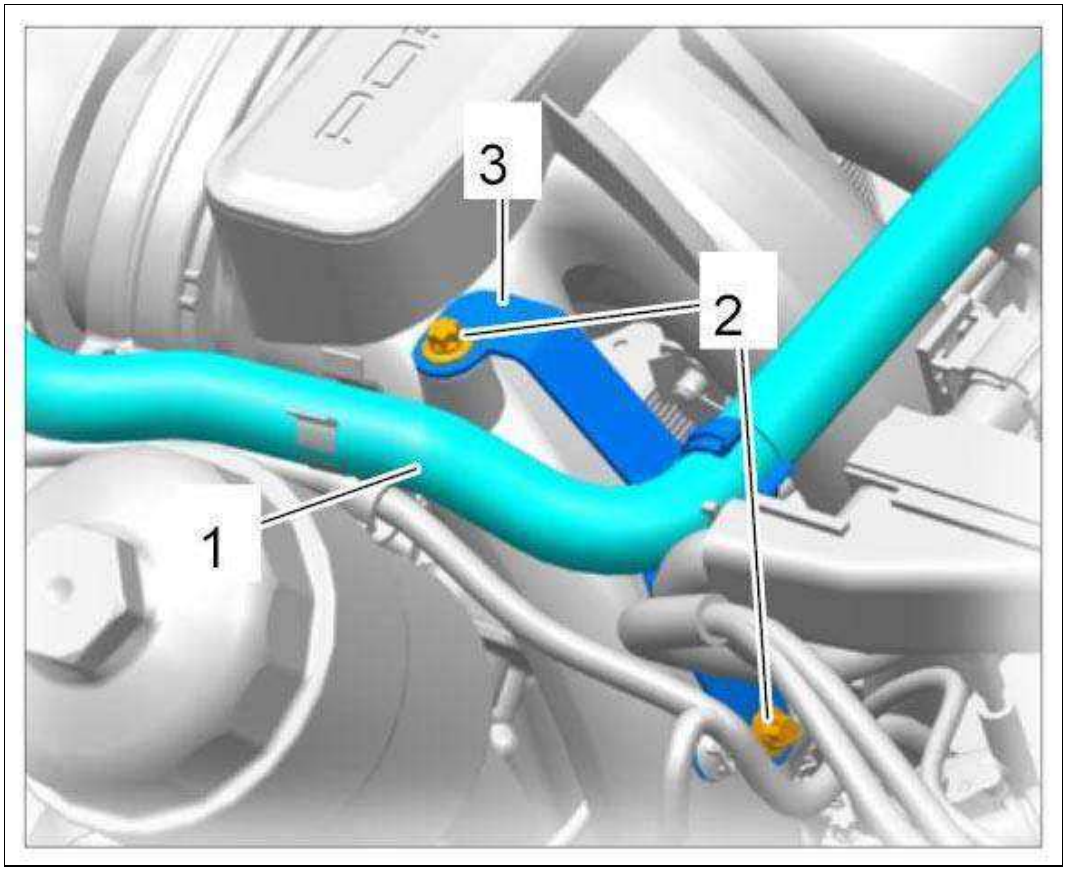

Courtesy of PORSCHE CARS NORTH AMERICA, INC.

2. Loosen intake-air distributor 4-6.

    1. 2.1. Unscrew six screws.

    Use a bar magnet to remove the screws (poor accessibility in some areas)!

    2. 2.2. Tool recommendation - 1/4 inch tool: ratchet, long extension, E10 Torx socket-wrench insert, bar magnet.

3. Remove intake-air distributor 4-6 **-2-** from the engine compartment.

    1. 3.1. Pull off connector on oil pressure sensor **-1-** .

    2. 3.2. Lift out intake-air distributor 4-6 past the air-conditioning compressor.

Fig 2: Removing Intake-Air Distributor

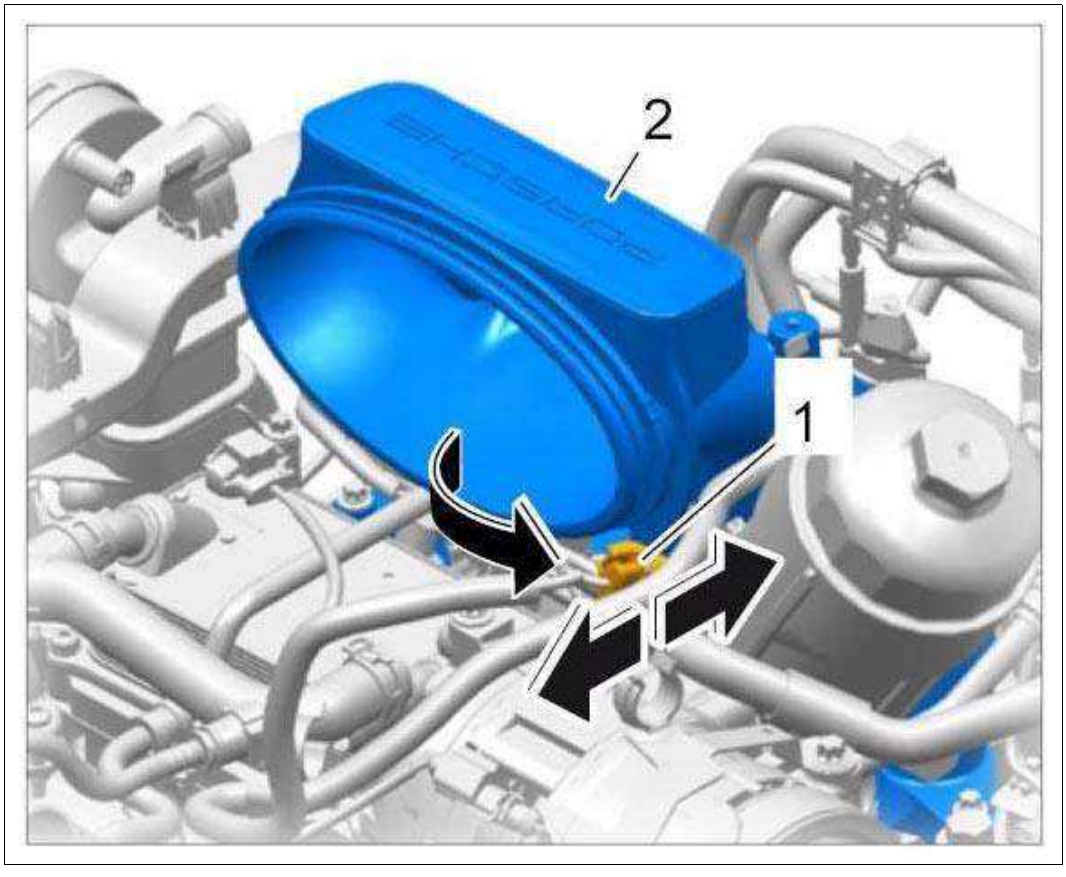

Courtesy of PORSCHE CARS NORTH AMERICA, INC.

4. Replace molded seals.
5. The intake-air distributor can be cleaned in a parts washing machine without aggressive cleaning agents.
6. Clean sealing faces on the cylinder head.

WM 244619 REMOVING AND INSTALLING INTAKE-AIR DISTRIBUTOR (EXCEPT CARRERA "EDITION", CARRERA CABRIOLET "EDITION", TURBO S, CARRERA 4 "EDITION", TURBO CABRIO, TURBO S CABRIO, CARRERA 4 CABRIOLET "EDITION", GT3, GT3 RS) > INSTALLING INTAKE-AIR DISTRIBUTOR

Tightening sequence:

Complete tightening sequence for intake-air distributor:

Fig 1: Intake-Air Distributor Fastening Screws Tightening Sequence

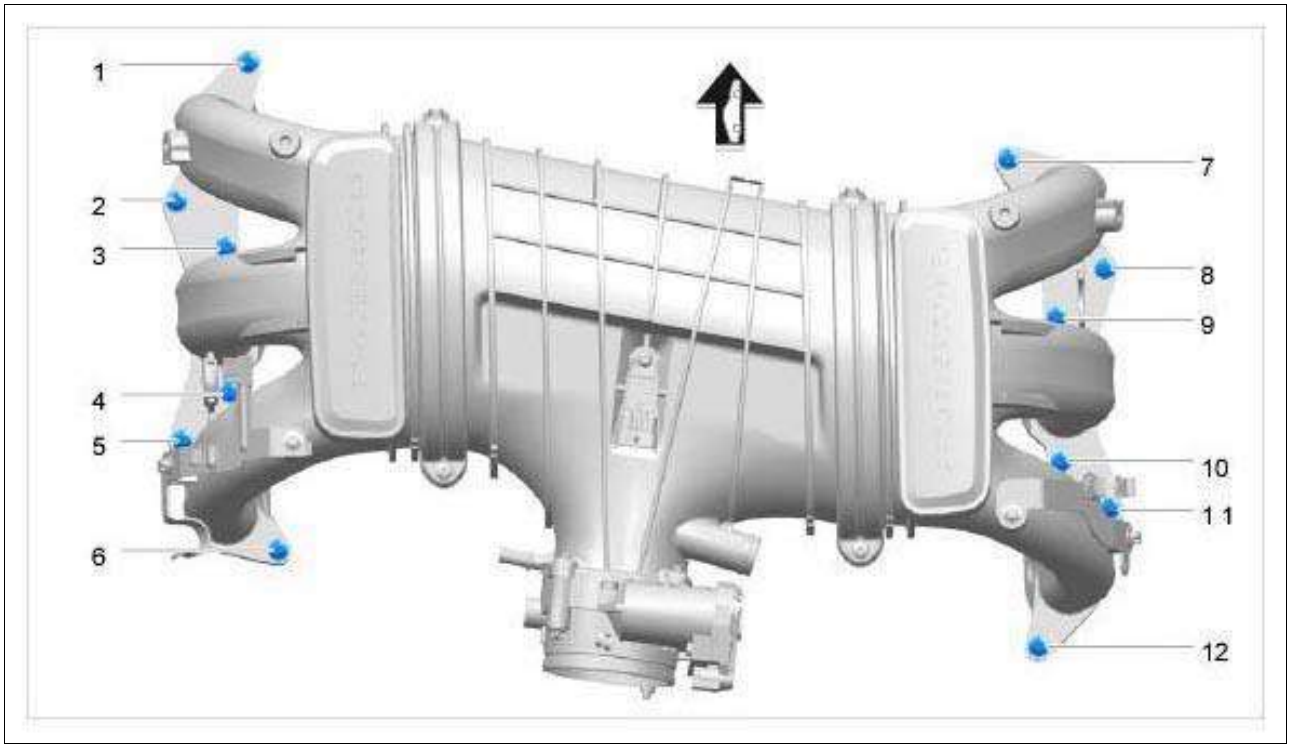

Courtesy of PORSCHE CARS NORTH AMERICA, INC.

1-12 - External Torx screws, M6 x 35

WM 244619 REMOVING AND INSTALLING INTAKE-AIR DISTRIBUTOR (EXCEPT CARRERA "EDITION", CARRERA CABRIOLET "EDITION", TURBO S, CARRERA 4 "EDITION", TURBO CABRIO, TURBO S CABRIO, CARRERA 4 CABRIOLET "EDITION", GT3, GT3 RS) > INSTALLING INTAKE-AIR DISTRIBUTOR > INSTALLING INTAKE-AIR DISTRIBUTOR - SIDE 1-3

1. Guide intake-air distributor 1-3 with new molded seals over the oil filler pipe into the engine compartment and position on the cylinder head.

2. Secure intake-air distributor 1-3.

    1. 2.1. Tool recommendation - 1/4 inch tool: ratchet, long extension, E10 Torx socket-wrench insert.

    2. 2.2. Position the screws using a bar magnet because of the poor accessibility in some areas.

    3. 2.3. Fit and tighten six screws according to the specified tightening sequence.

3. Install holder **-1-** on intake-air distributor 1-3.

    1. 3.1. Fit and tighten two screws **-3 + 4-** .

    2. 3.2. Clip in coolant ventilation line **-2-** .

Fig 1: Identifying Oil Filler Pipe Holder On Intake-Air Distributor 1-3

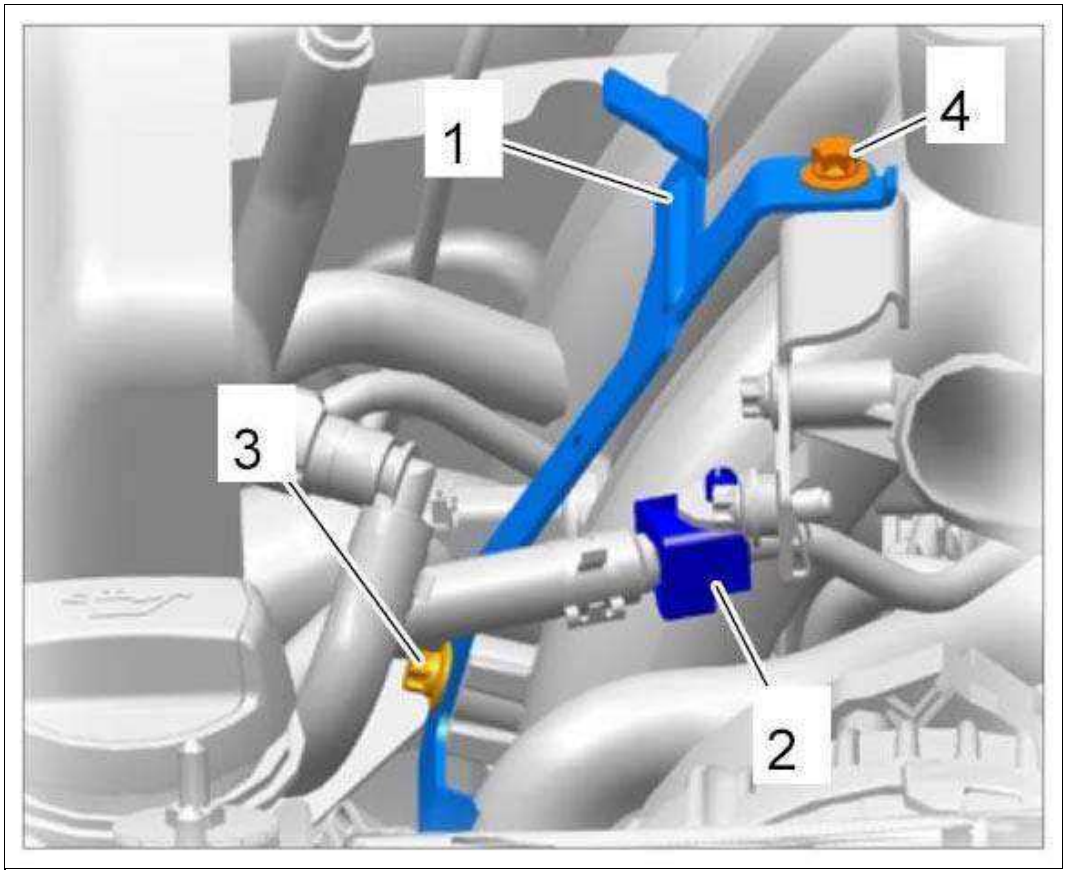

Courtesy of PORSCHE CARS NORTH AMERICA, INC.

4. Insert engine compartment temperature sensor into bracket.
5. Fit tank vent valve.

   → Installing Tank Vent Valve .
6. Install the generator.

   → Installing Generator .
7. Fit drive belt.

   → Installing Drive Belt .

WM 244619 REMOVING AND INSTALLING INTAKE-AIR DISTRIBUTOR (EXCEPT CARRERA "EDITION", CARRERA CABRIOLET "EDITION", TURBO S, CARRERA 4 "EDITION", TURBO CABRIO, TURBO S CABRIO, CARRERA 4 CABRIOLET "EDITION", GT3, GT3 RS) > INSTALLING INTAKE-AIR DISTRIBUTOR > INSTALLING INTAKE-AIR DISTRIBUTOR - SIDE 4-6

1. Position intake-air distributor 4-6 with new molded seals on the cylinder head.

    1. 1.1. Turn retaining clip for positive crankcase ventilation downwards before feeding it in.

2. 1.2. Insert intake-air distributor.

3. 1.3. Turn retaining clip into installation position and clip in line.

2. Secure intake-air distributor 4-6.

1. 2.1. Tool recommendation - 1/4 inch tool: ratchet, long extension, E10 Torx socket-wrench insert.

2. 2.2. Position the screws using a bar magnet because of the poor accessibility in some areas.

3. 2.3. Fit and tighten six screws according to the specified tightening sequence.

3. Install holder **-3-** for positive crankcase ventilation line.

1. 3.1. Fit and tighten two screws **-2-** .

2. 3.2. Clip in crankcase vent line **-1-** .

Fig 1: Identifying Positive Crankcase Ventilation Line Holder

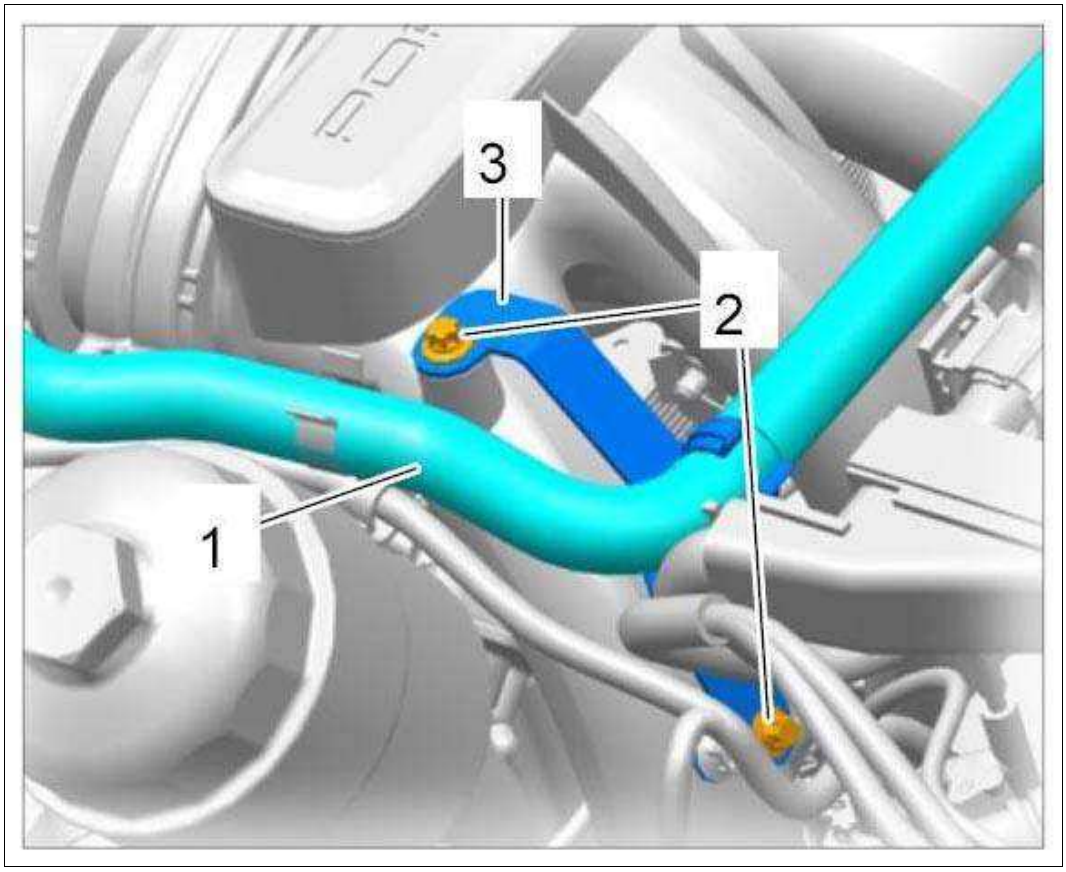

Courtesy of PORSCHE CARS NORTH AMERICA, INC.

WM 244619 REMOVING AND INSTALLING INTAKE-AIR DISTRIBUTOR (EXCEPT CARRERA "EDITION", CARRERA CABRIOLET "EDITION", TURBO S, CARRERA 4 "EDITION", TURBO CABRIO, TURBO S CABRIO, CARRERA 4 CABRIOLET "EDITION", GT3, GT3 RS) > SUBSEQUENT WORK

> *WARNING: Danger of objects or loads falling down*
>
> - *Risk of squashing or crushing*

→ Secure components to prevent them from falling down.

1. Slowly raise the engine to installation position using the jack.
2. Secure engine carrier on the engine mounts.

   → Installing Engine Carrier .
3. Secure cable duct to the intake distributor with screws.
4. Install resonance tube.

   → Installing Resonance Tube .
5. Check for leaks at intake-air distributor.

   → 244601 CHECKING INTAKE-AIR DISTRIBUTOR FOR LEAKS .
6. Install air cleaner housing.

   → 242519 REMOVING AND INSTALLING AIR CLEANER HOUSING .
7. Connect the battery.

   → 2X00IN WORK INSTRUCTIONS AFTER DISCONNECTING THE BATTERY .

WM 244619 REMOVING AND INSTALLING INTAKE-AIR DISTRIBUTOR (X51) (CARRERA S, CARRERA GTS, CARR. S CABRIO, CARR. CABRIO, CARRERA 4S, CARRERA 4 GTS, TARGA 4S, TARGA 4 GTS, CARR. 4S CABRIO, CARR. 4 GTS CABRIO) > TOOLS

Designation	Type	Number	Description

Hydraulic garage jack H 2 SL	Workshop equipment	WE 1032	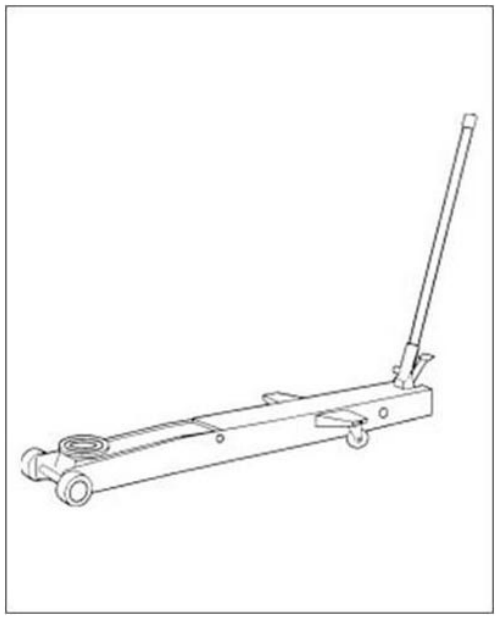
transmission jack V.A.G 1383 A	Workshop equipment	WE 1082	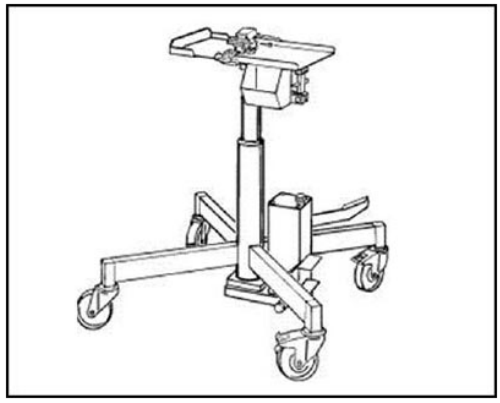

WM 244619 REMOVING AND INSTALLING INTAKE-AIR DISTRIBUTOR (X51) (CARRERA S, CARRERA GTS, CARR. S CABRIO, CARR. CABRIO, CARRERA 4S, CARRERA 4 GTS, TARGA 4S, TARGA 4 GTS, CARR. 4S CABRIO, CARR. 4 GTS CABRIO) > TECHNICAL VALUES

Location	Description	Type	Basic value	Tolerance 1	Tolerance 2
Engine carrier to engine mounting	Collar nut, M12	Tightening torque	85 Nm (63 ftlb.)		
Intake-air distributor to intake manifold (X51)	Screw, M6 x 30	Tightening torque	13 Nm (9.5 ftlb.)	+/-2 Nm (+/- 1.5 ftlb.)	
Connecting holder for intake-air distributor/resonance tube (X51)	M6 screw	Tightening torque	6 Nm (4.5 ftlb.)	+1 Nm (+0.5 ftlb.)	
Oil filler hose connection piece to	Screw, M6 x 16	Tightening torque	10 Nm (7.5 ftlb.)		

intake-air distributor, bank 1-3 (X51)

WM 244619 REMOVING AND INSTALLING INTAKE-AIR DISTRIBUTOR (X51) (CARRERA S, CARRERA GTS, CARR. S CABRIO, CARR. CABRIO, CARRERA 4S, CARRERA 4 GTS, TARGA 4S, TARGA 4 GTS, CARR. 4S CABRIO, CARR. 4 GTS CABRIO) > INFORMATION > COMPONENT OVERVIEW

Assembly overview - intake-air distributor, complete:

Fig 1: Overview Of Intake-Air Distributor Assembly X51

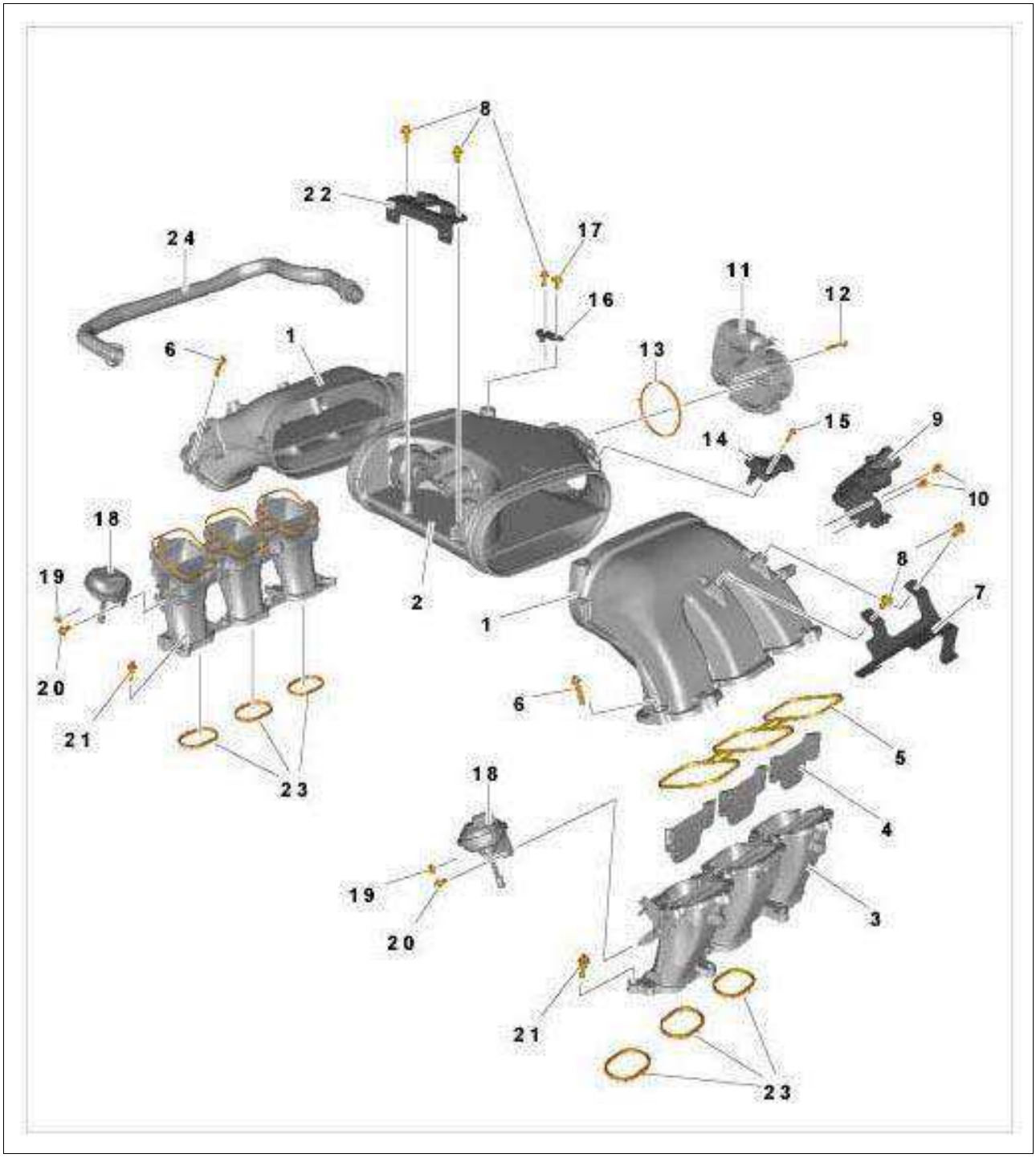

Courtesy of PORSCHE CARS NORTH AMERICA, INC.

1. Intake-air distributor 1-3 and 4-6 (identical part)
2. Resonance tube
3. Intake pipe support
4. Switching flap shaft
5. Molded seal for intake pipe support, upper

6. Screw, M6 x 30, for securing intake-air distributor to intake pipe support
7. Tank vent valve holder
8. Screw, M6 x 12
9. Connection piece for oil filler hose and vent line
10. Screws, M6 x 16 (micro-self-locking), for connection piece
11. Throttle housing
12. Screws, M6 x 45, for throttle housing
13. Molded seal for throttle housing
14. Pressure and temperature sensor for intake manifold
15. Screw, M5 x 16, for pressure and temperature sensor
16. Connecting piece
17. Screws, M6 x 16, for connecting piece
18. Vacuum unit for switching flap shaft
19. M5 nut
20. Torx screw, M5 x 12
21. Screws for intake pipe support, M6 x 25 with loss preventer
22. Holder for control valves for tuning flap
23. Molded seal for intake pipe support, lower
24. Positive crankcase ventilation line

WM 244619 REMOVING AND INSTALLING INTAKE-AIR DISTRIBUTOR (X51) (CARRERA S, CARRERA GTS, CARR. S CABRIO, CARR. CABRIO, CARRERA 4S, CARRERA 4 GTS, TARGA 4S, TARGA 4 GTS, CARR. 4S CABRIO, CARR. 4 GTS CABRIO) > PRELIMINARY WORK > PRELIMINARY WORK FOR INTAKE-AIR DISTRIBUTORS ON CYLINDER BANK 1-3

1. **On Targa vehicles: Targa roof must be in service position!**

   → 6101IN CONVERTIBLE-TOP SERVICE POSITION .

2. Disconnect ground strap on the battery.
3. Remove air cleaner housing.

   → 242519 REMOVING AND INSTALLING AIR CLEANER HOUSING .

   1. 3.1. Unclip hose **-1-** for acoustic simulator at the body connection piece **-2-** .

Fig 1: Identifying Acoustic Simulator Hose

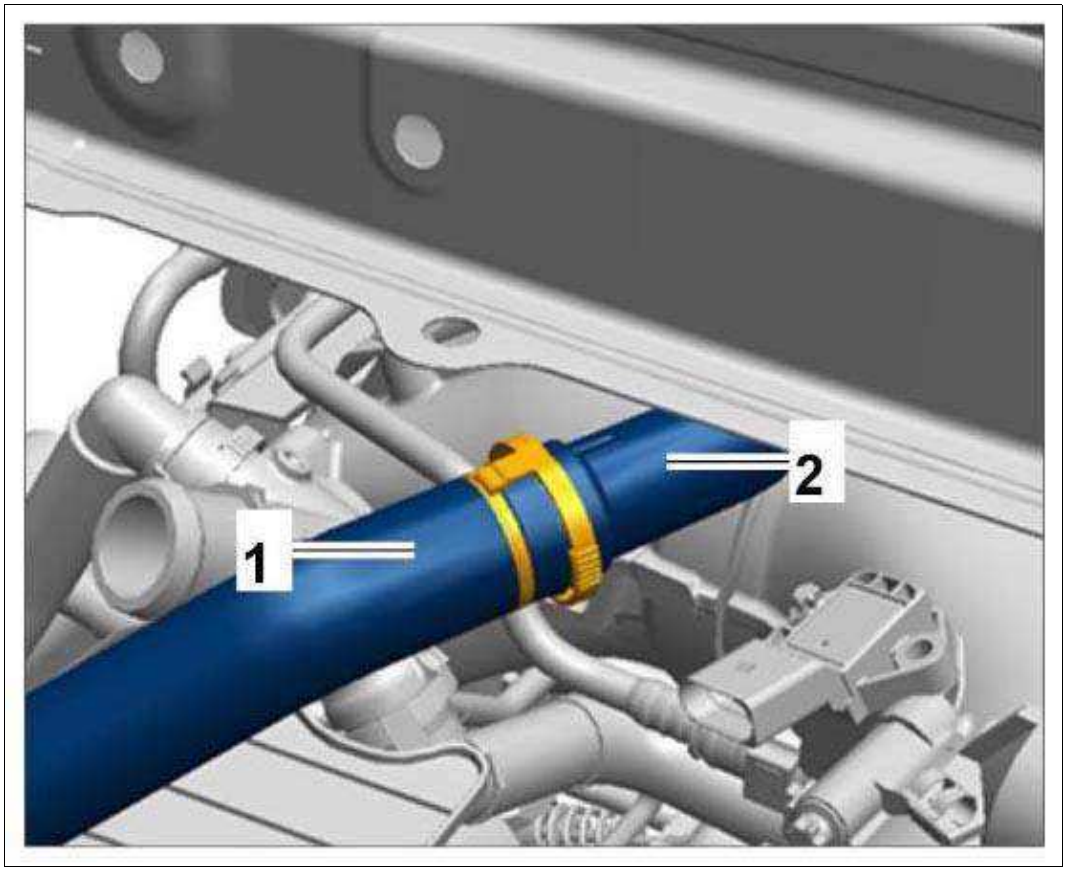

Courtesy of PORSCHE CARS NORTH AMERICA, INC.

4. Remove heat shield **-1-** for air cleaner.

The heat shield can rub against the pulleys when lowering the engine!

1. 4.1. Screw off speed nuts **-2-** and remove heat shield.

Fig 2: Identifying Air Cleaner Heat Shield

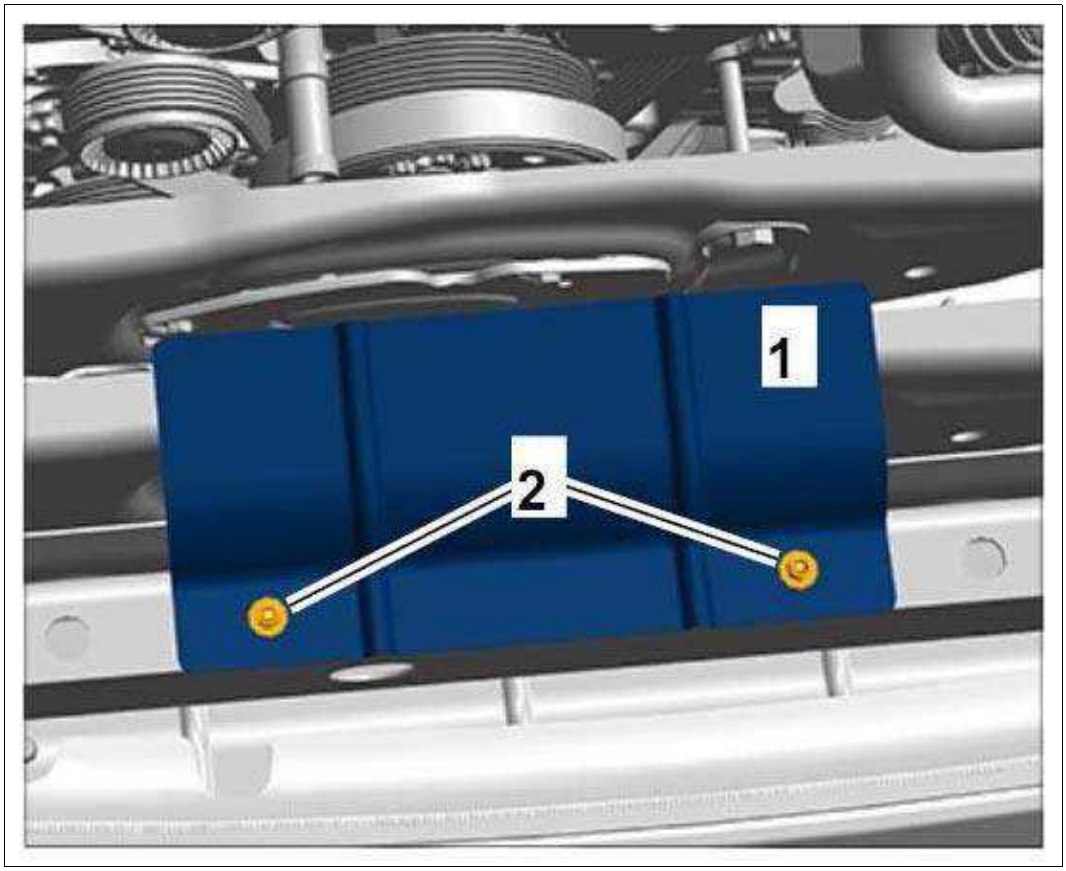

Courtesy of PORSCHE CARS NORTH AMERICA, INC.

5. **On Cabriolet and Targa vehicles: Remove support plate.**

   → 421419 REMOVING AND INSTALLING SUPPORT PLATE .

6. Remove cover for rear underbody.

   → 519419 REMOVING AND INSTALLING COVER FOR REAR UNDERBODY .

7. Loosen rear axle carrier.

   → 420609 LOOSENING AND SECURING REAR-AXLE CROSS MEMBER .

   1. 7.1. Loosen fastening screws on both sides by about 3 turns, but do not unscrew them fully → Threaded joint on rear-axle cross member, right side .

Fig 3: Identifying Threaded Joint On Rear-Axle Cross Member And Right Side

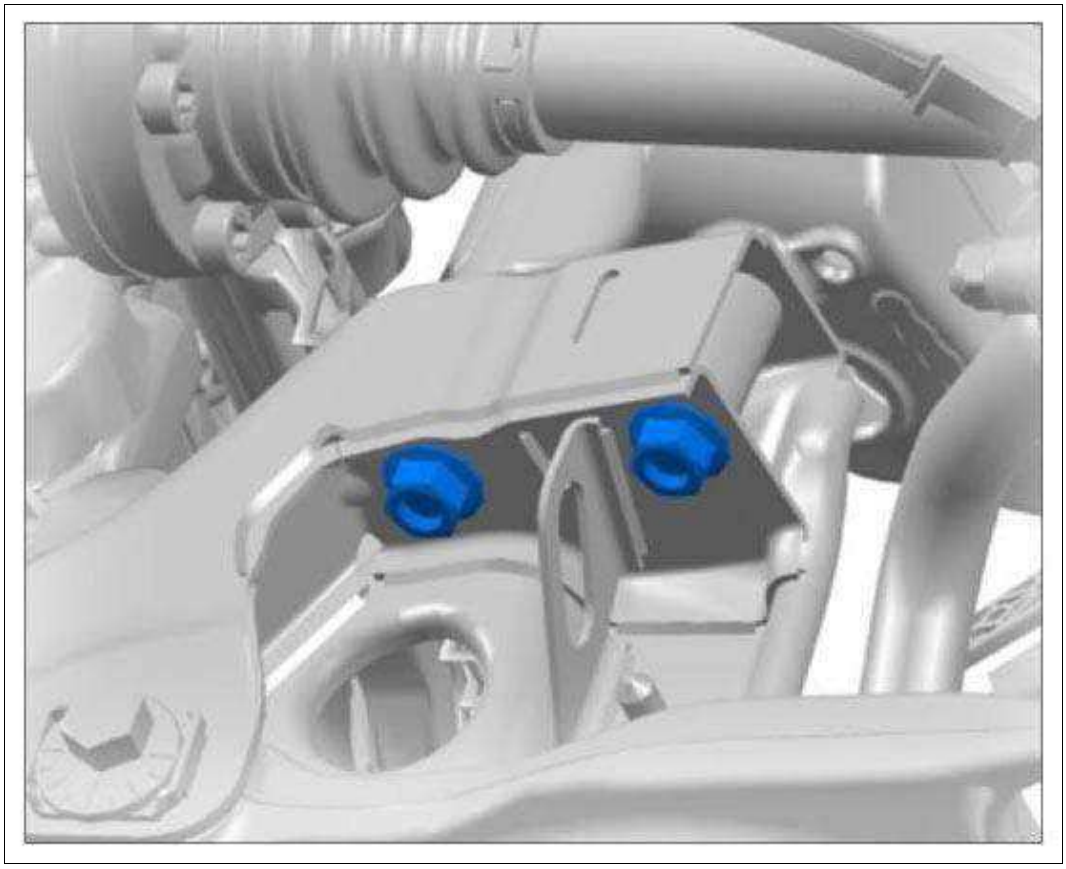

Courtesy of PORSCHE CARS NORTH AMERICA, INC.

WARNING: Danger of objects or loads falling down

1. Risk of squashing or crushing

→ Secure components to prevent them from falling down.

Information

1. It may only be supported over a large area at the oil pan.
2. Localized loading is not permitted.

8. Support the engine using a jack **-1-** and transmission jack plate **-2-** at the oil pan.

Fig 4: Supporting Engine Using Jack

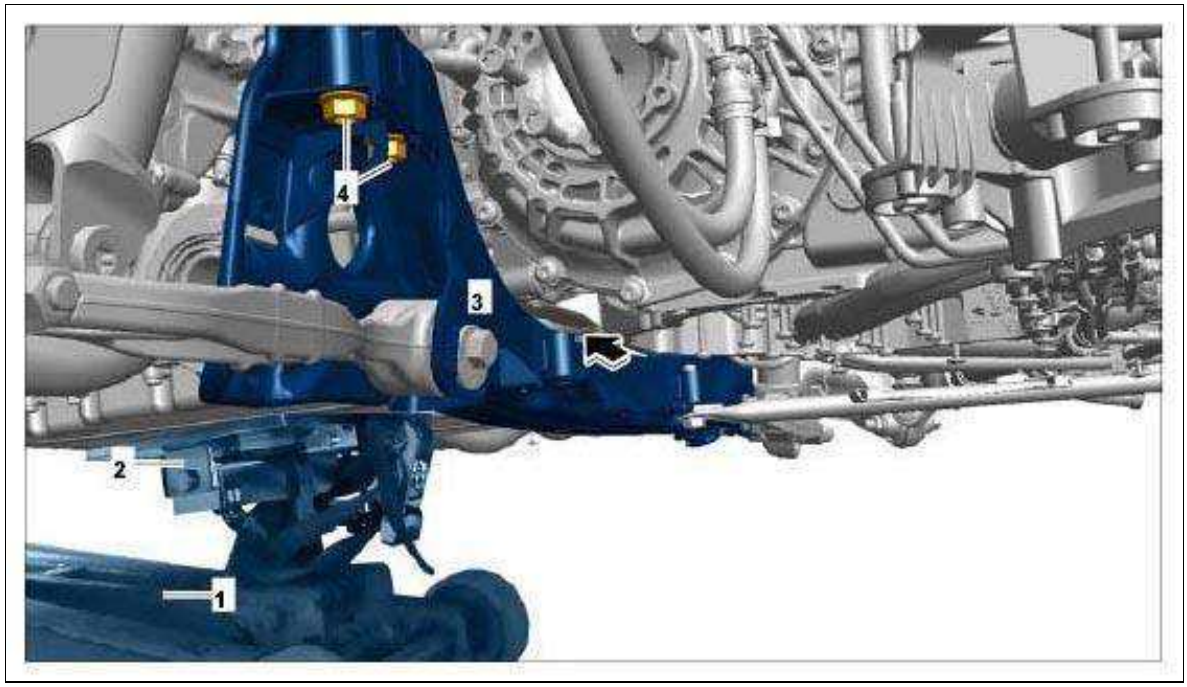

Courtesy of PORSCHE CARS NORTH AMERICA, INC.

1. **Hydraulic garage jack H 2 SL WE 1032**
2. Transmission jack plate from **transmission jack V.A.G 1383 A WE 1082**
3. Rear-axle cross member
4. Fastening screws for rear-axle cross member

9. Unscrew collar nut **-2-** at the left and right on the engine carrier **-1-** .

Fig 5: Identifying Engine Carrier To Engine Mount Collar Nuts

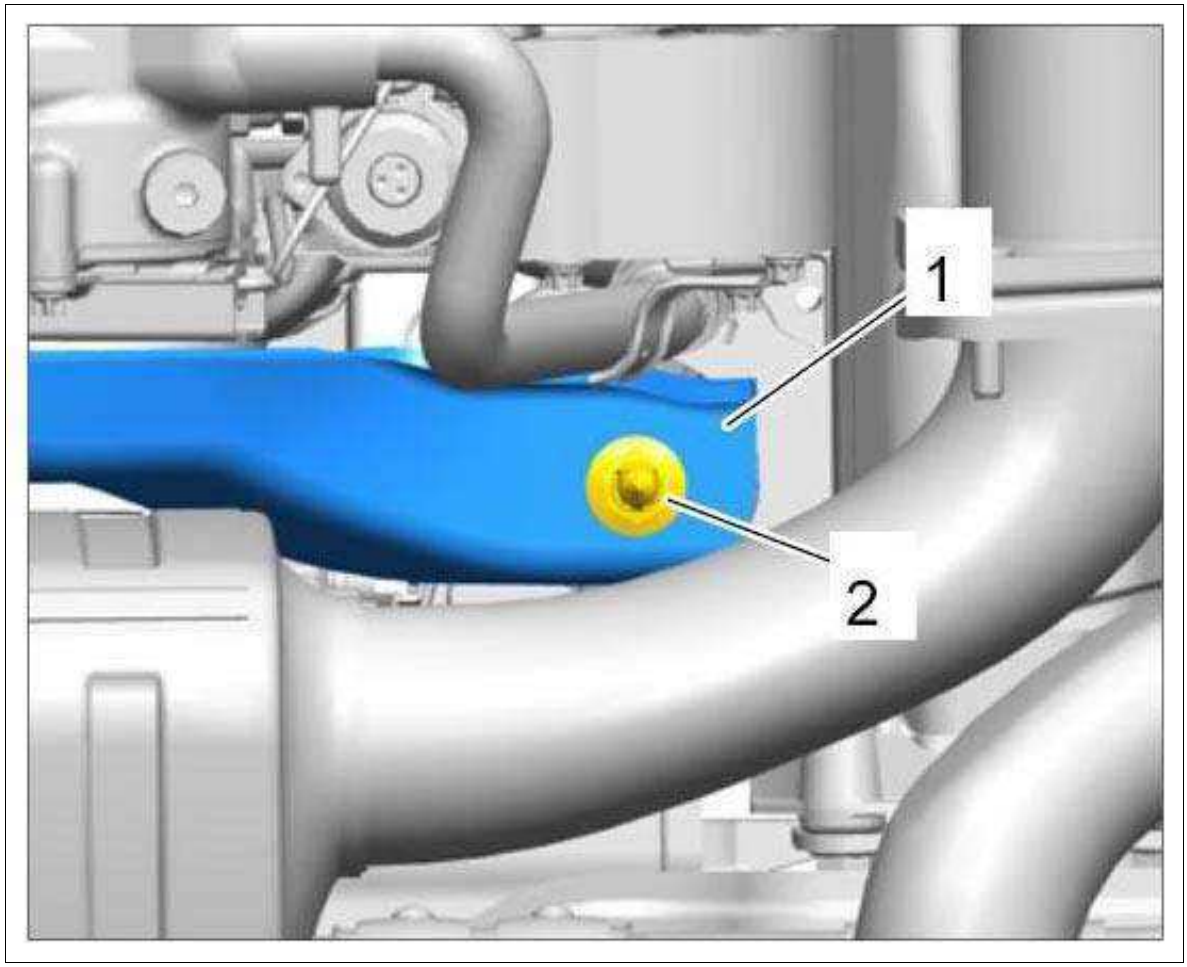

Courtesy of PORSCHE CARS NORTH AMERICA, INC.

10. Slowly lower the engine by about 50-60 mm **-X-** using the jack.

    Illustration: Required distance between resonance tube **-1-** and body **-2-** .

Fig 6: Adjusting Distance Between Resonance Tube And Body

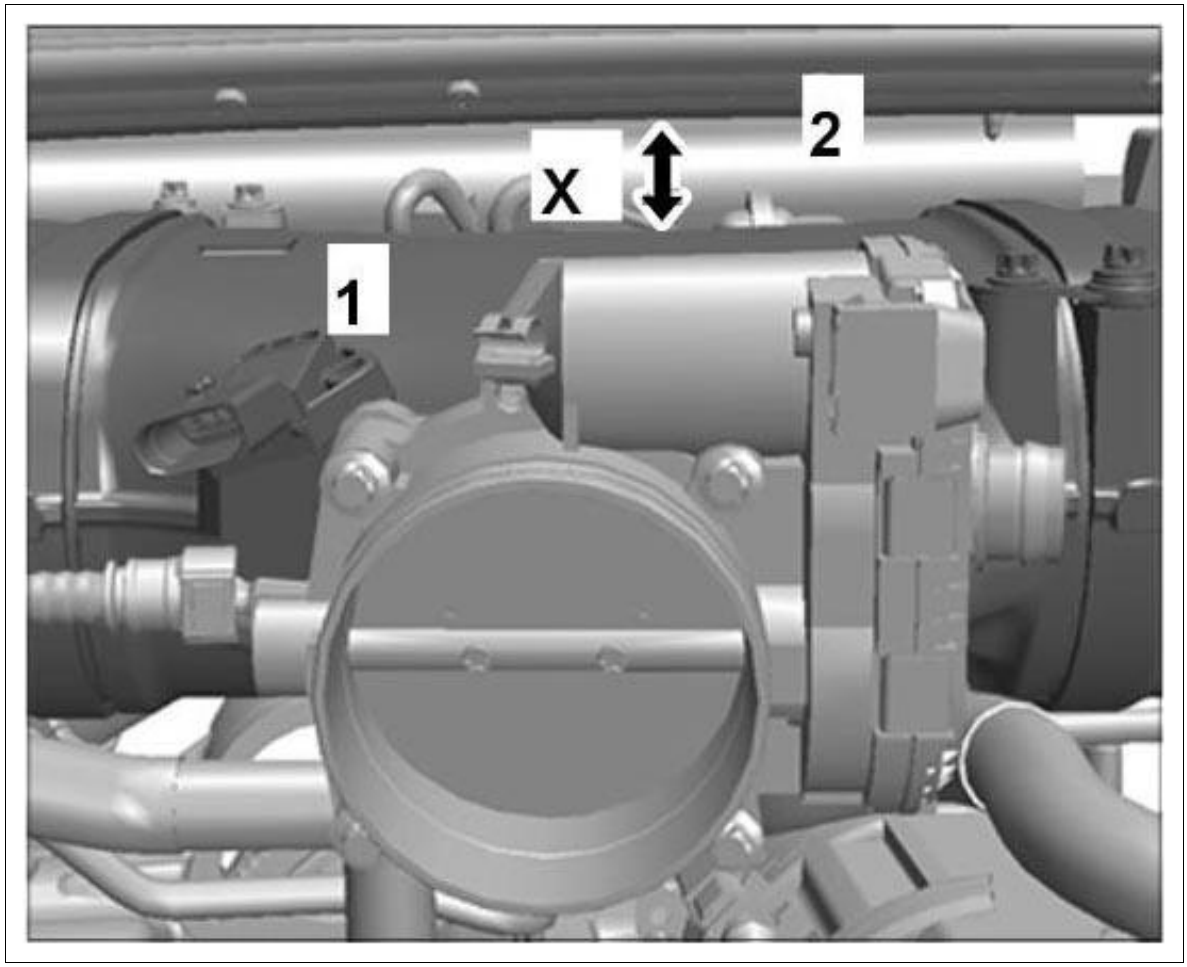

Courtesy of PORSCHE CARS NORTH AMERICA, INC.

11. Remove connection piece **-1-** for oil filler hose and positive crankcase ventilation.

    1. 11.1. Pull off oil filler hose **-2-** by opening the spring band clamp.
    2. 11.2. Disconnect positive crankcase ventilation lines **-3 and 5-** .
    3. 11.3. Unscrew M6 screws (micro-self-locking) **-4-** . **Replace screws!**

Fig 7: Identifying Oil Filler Hose Connection Piece And Positive Crankcase Ventilation

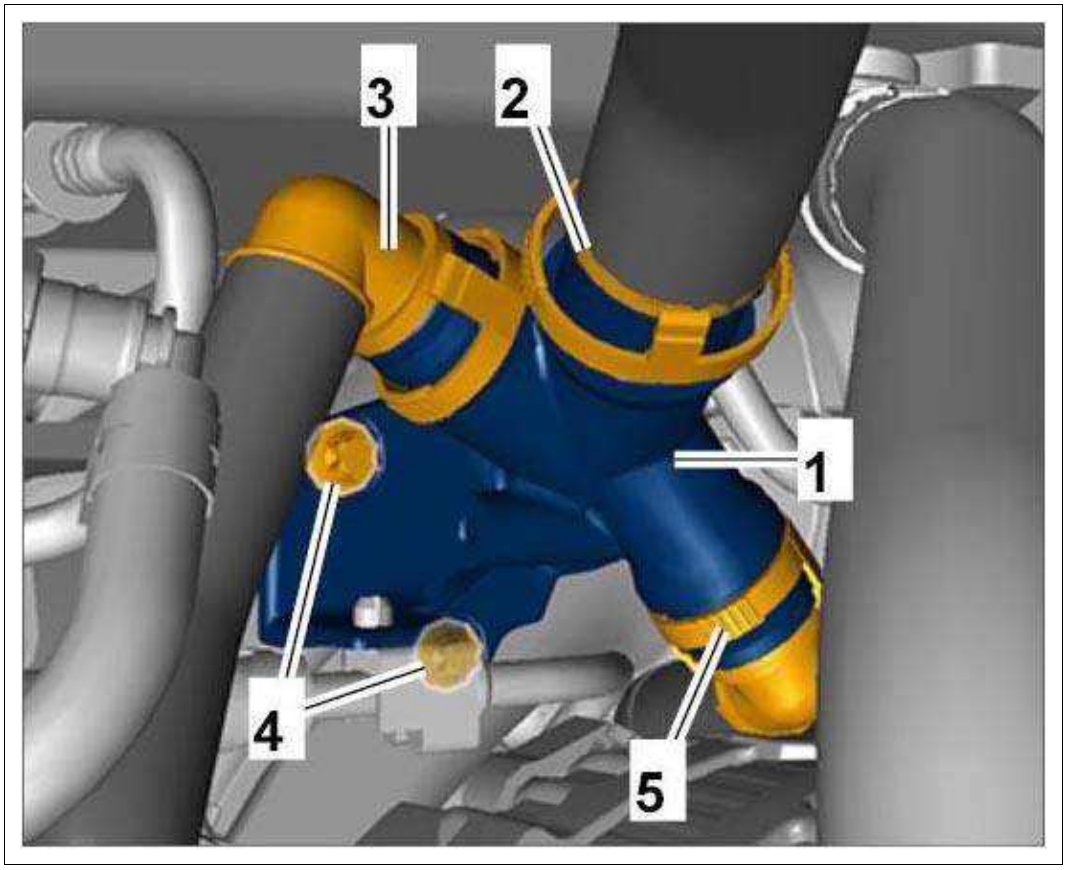

Courtesy of PORSCHE CARS NORTH AMERICA, INC.

12. Remove upper cover for drive belt.

    1. 12.1. Unscrew M6 screws **-4-** and remove cover **-3-** .

Fig 8: Identifying Cable Plugs And Drive Belt Cover

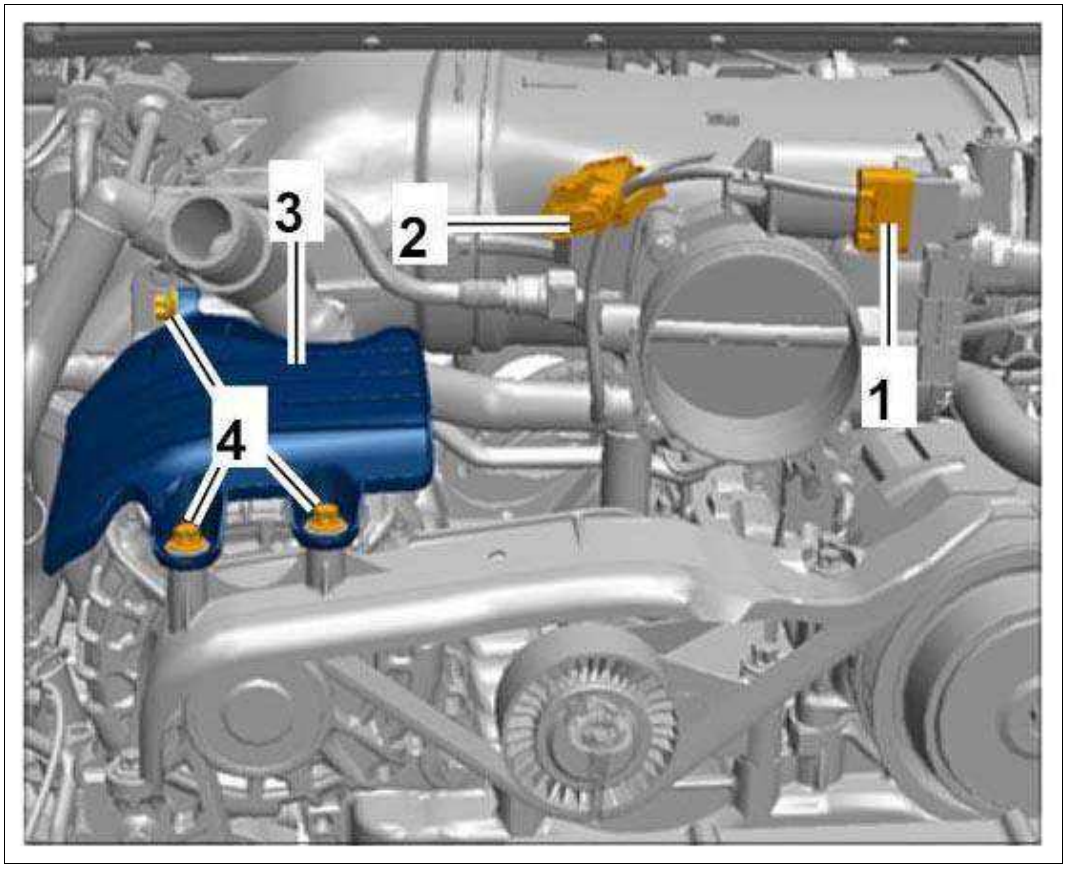

Courtesy of PORSCHE CARS NORTH AMERICA, INC.

13. Remove tank vent valve **-1-** .

    1. 13.1. Loosen quick connector **-4-** for tank vent valve at the resonance tube.

       Disconnect tank vent line at the connection point **-3-** .

Fig 9: Identifying Throttle Housing And Vent Lines

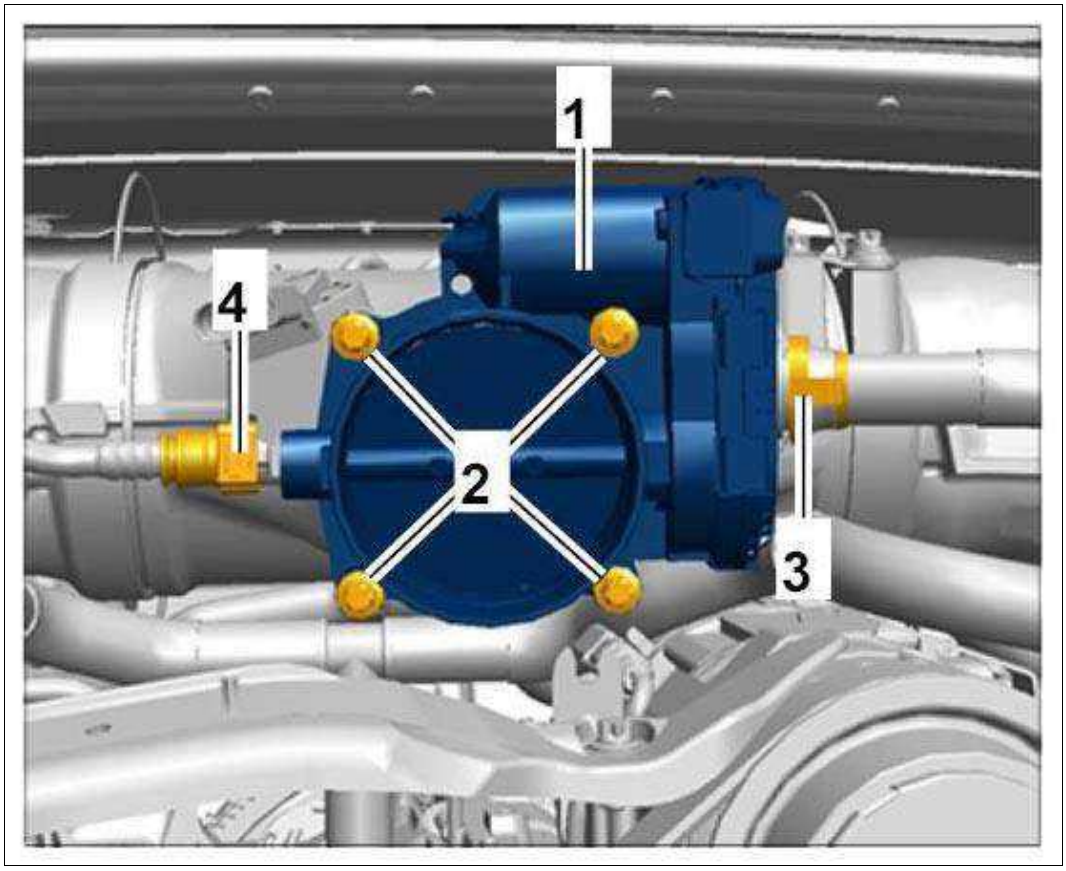

Courtesy of PORSCHE CARS NORTH AMERICA, INC.

2. 13.2. Pull tank vent valve (rubber mounting) out of the holder.

3. 13.3. Disconnect cable plug **-2-** .

Fig 10: Identifying Tank Vent Valve

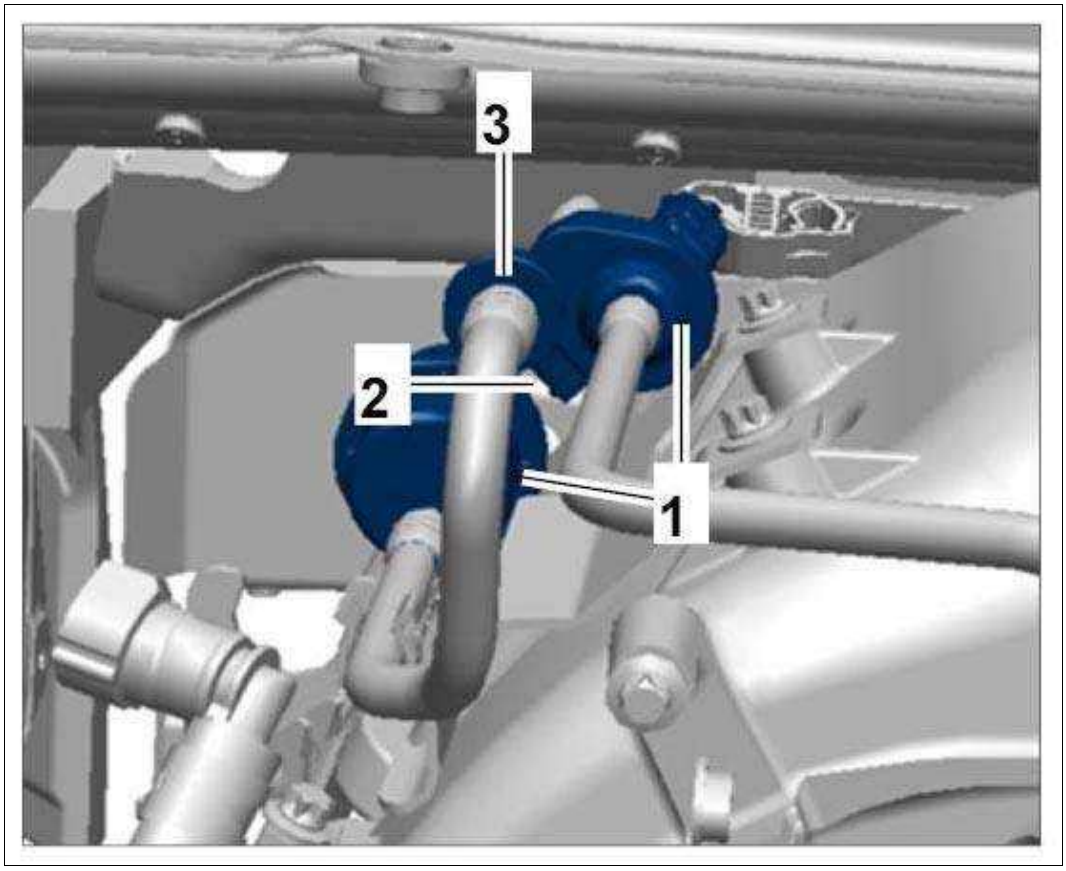

Courtesy of PORSCHE CARS NORTH AMERICA, INC.

WM 244619 REMOVING AND INSTALLING INTAKE-AIR DISTRIBUTOR (X51) (CARRERA S, CARRERA GTS, CARR. S CABRIO, CARR. CABRIO, CARRERA 4S, CARRERA 4 GTS, TARGA 4S, TARGA 4 GTS, CARR. 4S CABRIO, CARR. 4 GTS CABRIO) > PRELIMINARY WORK > PRELIMINARY WORK FOR INTAKE-AIR DISTRIBUTOR ON CYLINDER BANK 4-6

WARNING: Danger of objects or loads falling down

- *Risk of squashing or crushing*

→ Secure components to prevent them from falling down.

Information

- It may only be supported over a large area at the oil pan.
- Localized loading is not permitted.

1. **On Targa vehicles: Targa roof must be in service position!**

   → 6101IN CONVERTIBLE-TOP SERVICE POSITION .

2. Disconnect ground strap on the battery.

3. Remove air cleaner housing.

→ 242519 REMOVING AND INSTALLING AIR CLEANER HOUSING .

1. 3.1. Unclip hose **-1-** for acoustic simulator at the body connection piece **-2-** .

Fig 1: Identifying Acoustic Simulator Hose

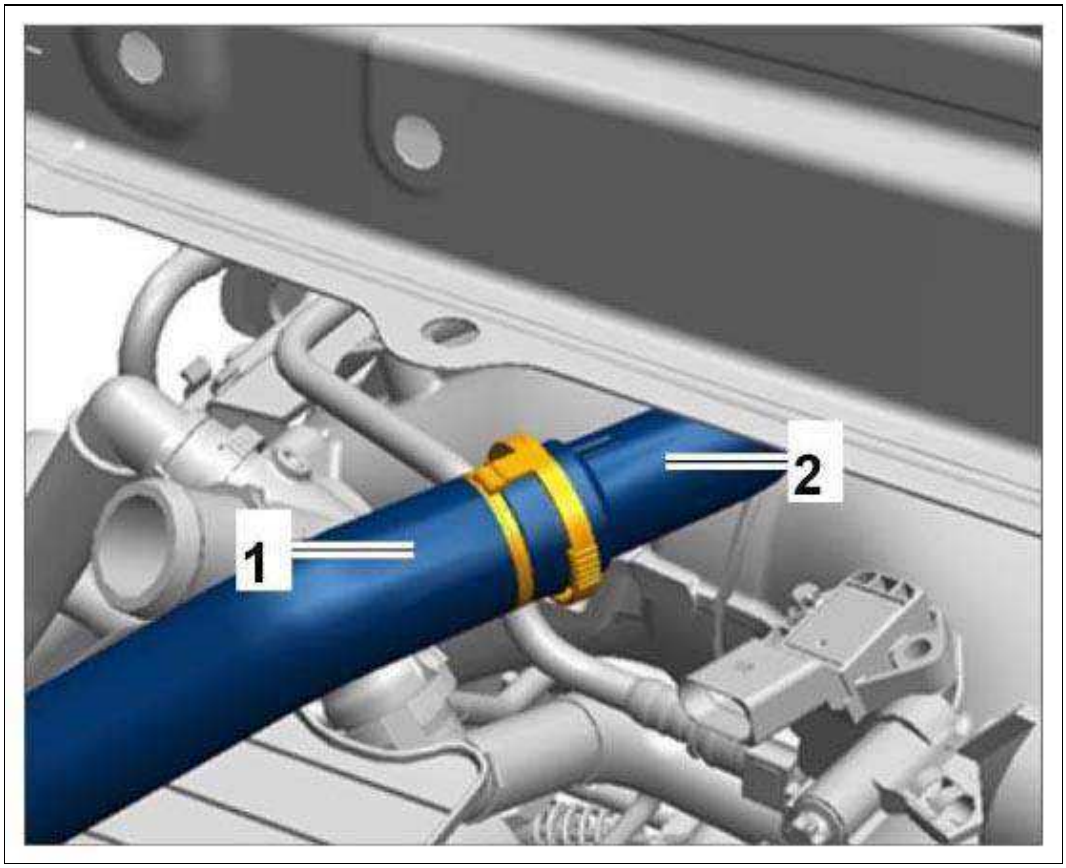

Courtesy of PORSCHE CARS NORTH AMERICA, INC.

4. Remove DME engine control module with holder.

→ 247019 REMOVING AND INSTALLING DME CONTROL UNIT .

5. Disconnect engine wire harness (three cable plugs) at the contact strip on the body at the right.

6. Remove heat shield **-1-** for air cleaner.

The heat shield can rub against the pulleys when lowering the engine!

1. 6.1. Screw off speed nuts **-2-** and remove heat shield.

Fig 2: Identifying Air Cleaner Heat Shield

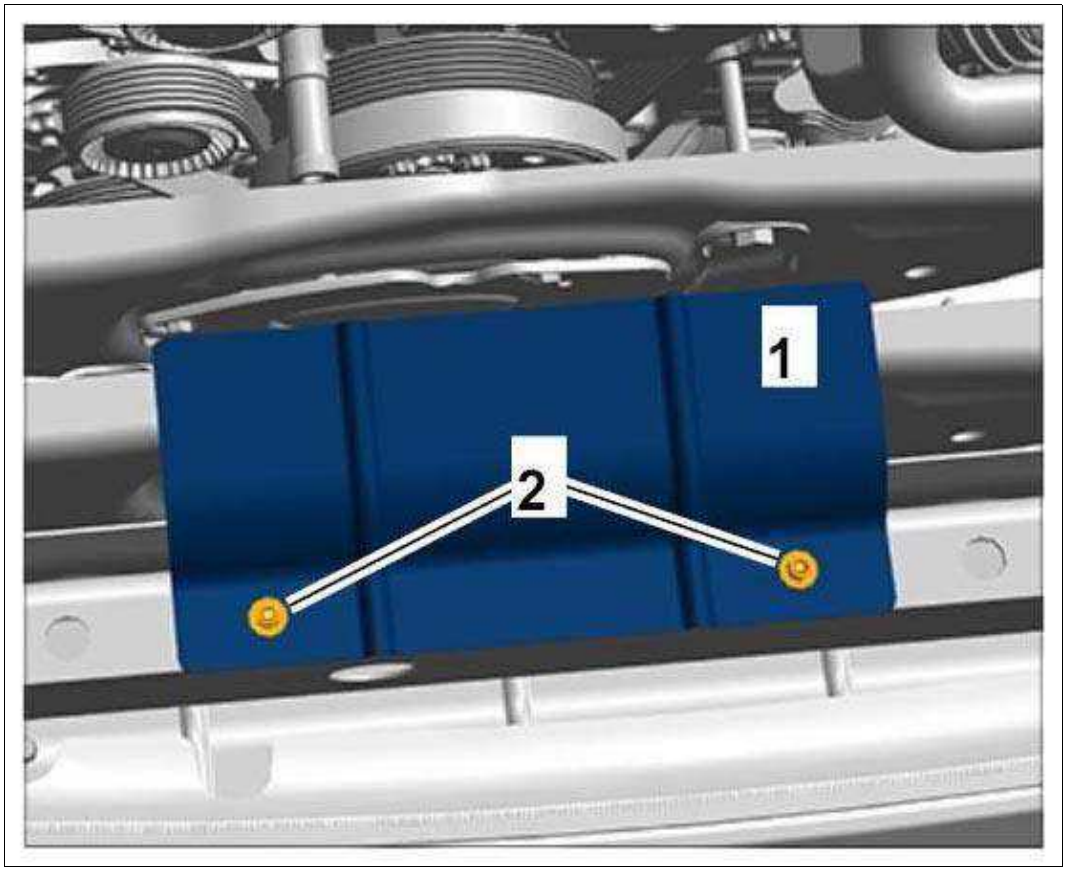

Courtesy of PORSCHE CARS NORTH AMERICA, INC.

7. **On Cabriolet and Targa vehicles: Remove support plate.**

   → 421419 REMOVING AND INSTALLING SUPPORT PLATE .

8. Remove cover for rear underbody.

   → 519419 REMOVING AND INSTALLING COVER FOR REAR UNDERBODY .

9. Loosen rear axle carrier.

   → 420609 LOOSENING AND SECURING REAR-AXLE CROSS MEMBER .

   1. 9.1. Loosen fastening screws on both sides by about 3 turns, but do not unscrew them fully.

Fig 3: Identifying Threaded Joint On Rear-Axle Cross Member And Right Side

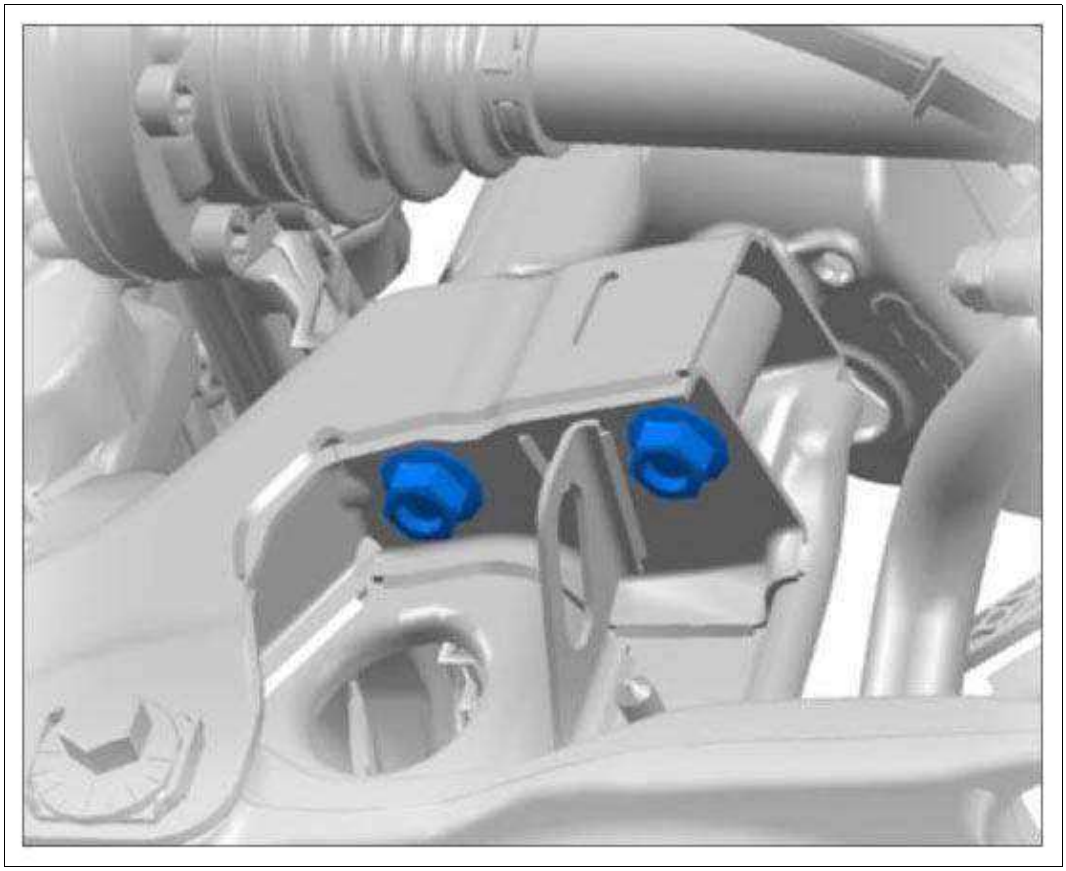

Courtesy of PORSCHE CARS NORTH AMERICA, INC.

WARNING: Danger of objects or loads falling down

1. Risk of squashing or crushing

→ Secure components to prevent them from falling down.

Information

1. It may only be supported over a large area at the oil pan.
2. Localized loading is not permitted.

10. Support the engine using the workshop jack **-1-** and transmission jack plate **-2-** at the oil pan.

Fig 4: Supporting Engine Using Jack

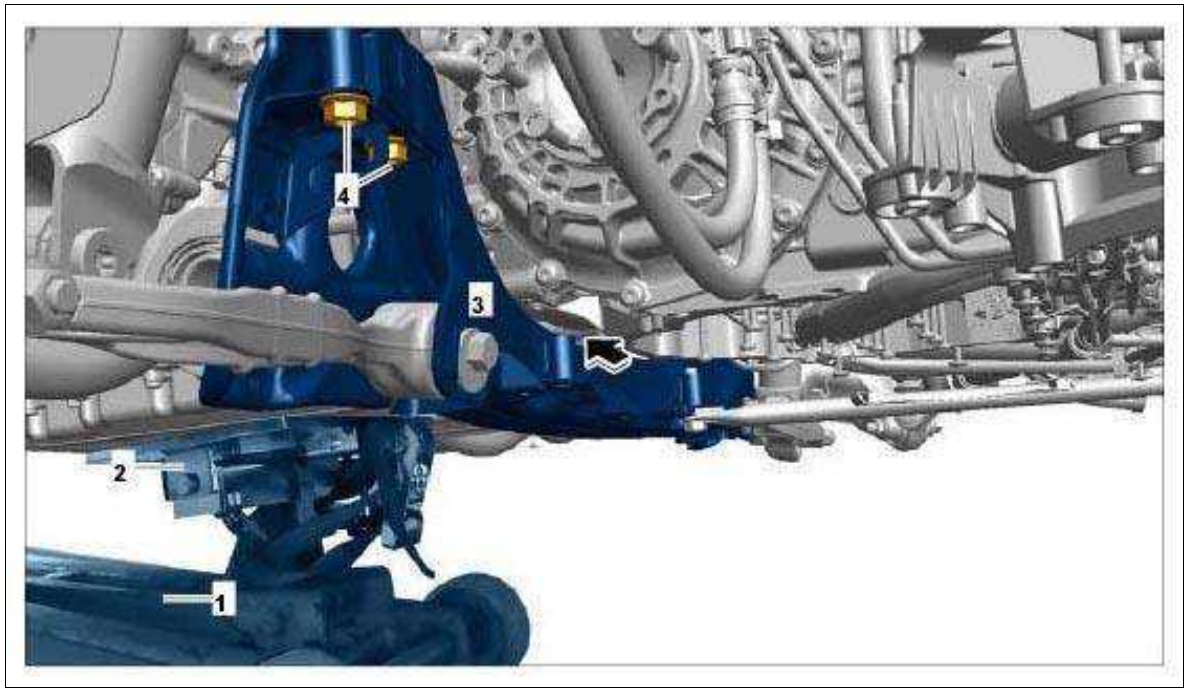

Courtesy of PORSCHE CARS NORTH AMERICA, INC.

1. **Hydraulic garage jack H 2 SL WE 1032**
2. Transmission jack plate from **transmission jack V.A.G 1383 A WE 1082**
3. Rear-axle cross member
4. Fastening screws for rear-axle cross member

11. Unscrew M12 collar nuts **-2-** at the left and right on the engine carrier **-1-** .

Fig 5: Identifying Engine Carrier To Engine Mount Collar Nuts

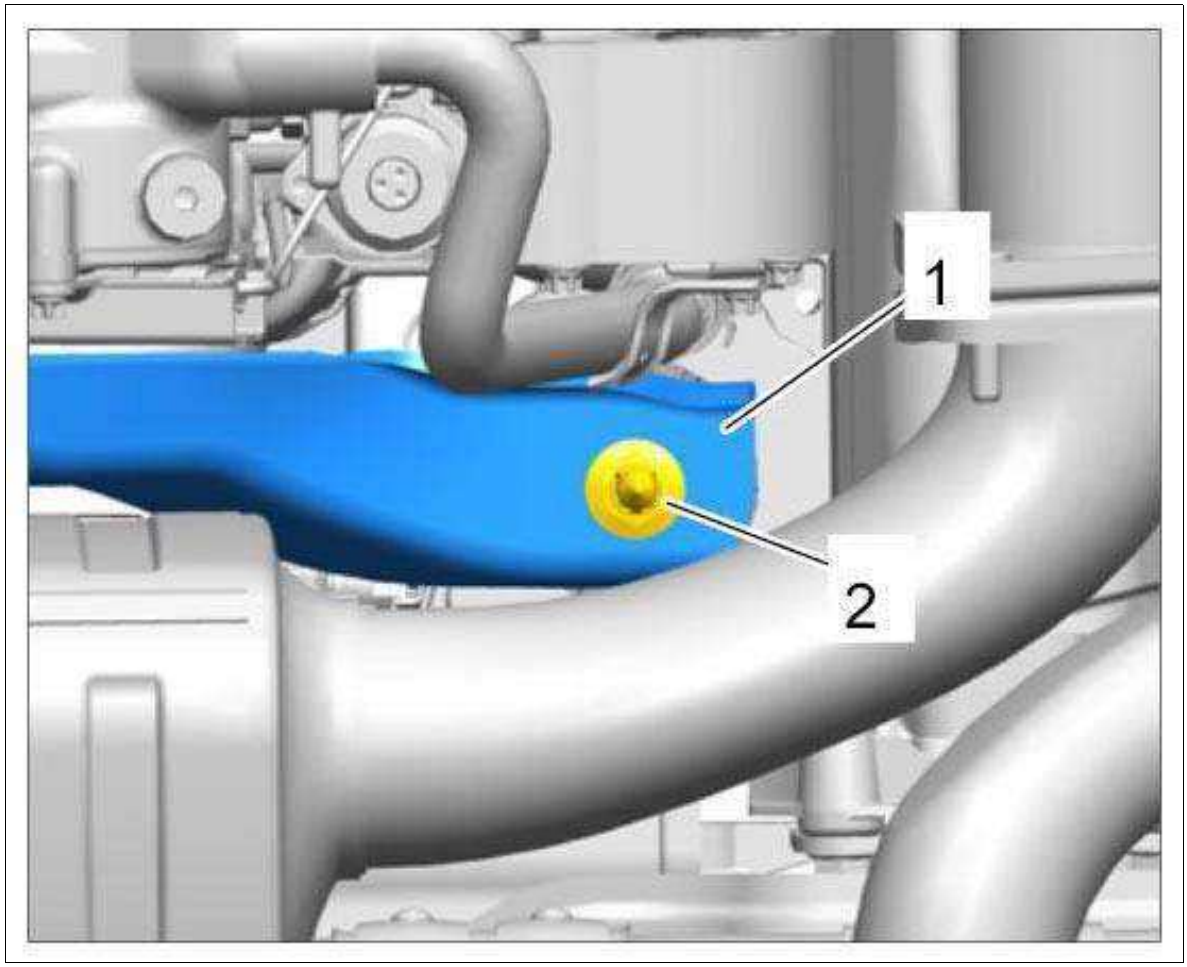

Courtesy of PORSCHE CARS NORTH AMERICA, INC.

12. Slowly lower the engine by about 50-60 mm **-X-** using the jack.

    Illustration: Required distance between resonance tube **-1-** and body **-2-** .

Fig 6: Adjusting Distance Between Resonance Tube And Body

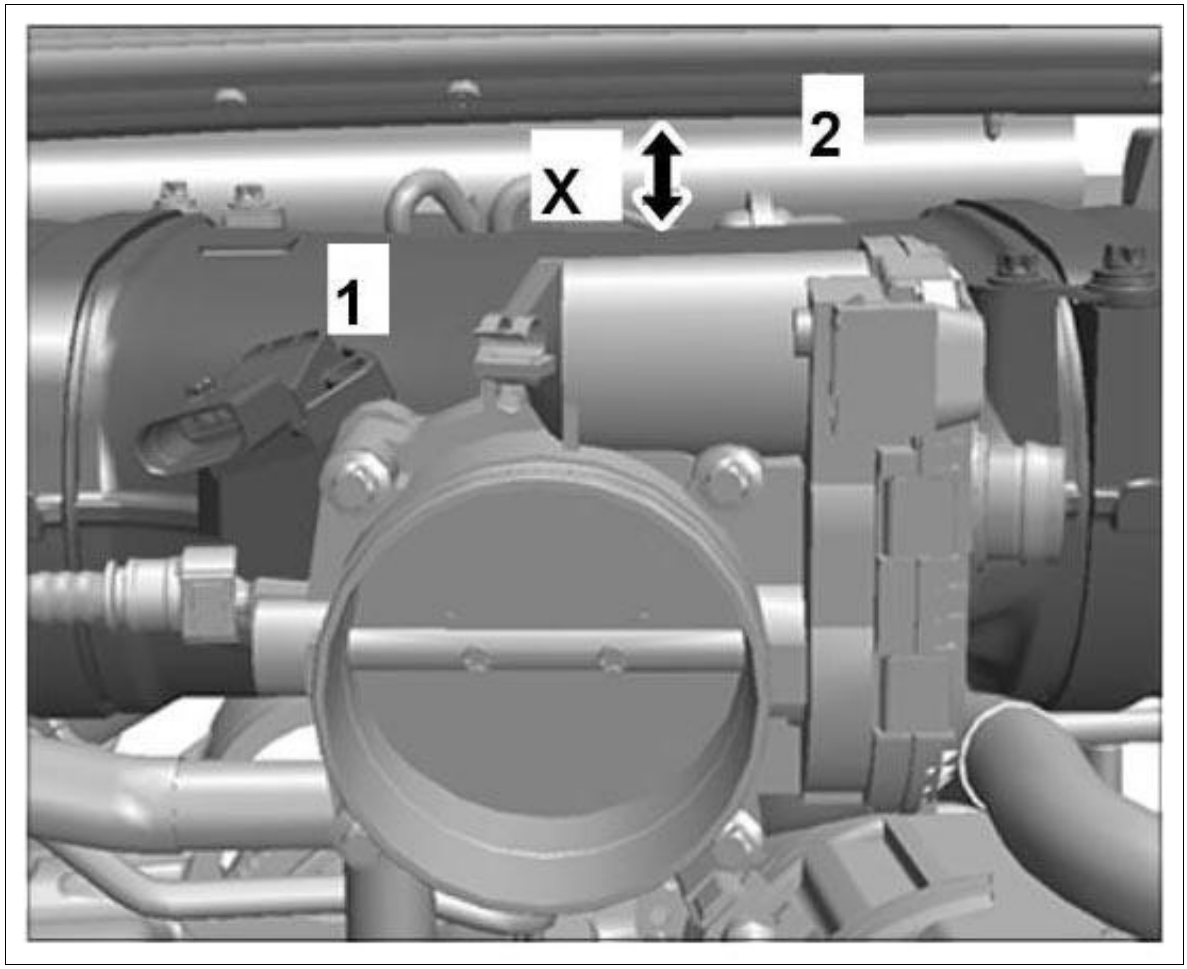

Courtesy of PORSCHE CARS NORTH AMERICA, INC.

WM 244619 REMOVING AND INSTALLING INTAKE-AIR DISTRIBUTOR (X51) (CARRERA S, CARRERA GTS, CARR. S CABRIO, CARR. CABRIO, CARRERA 4S, CARRERA 4 GTS, TARGA 4S, TARGA 4 GTS, CARR. 4S CABRIO, CARR. 4 GTS CABRIO) > REMOVING INTAKE-AIR DISTRIBUTOR > INFORMATION

Overview of line and cable routing on the front intake-air distributor:

Fig 1: Overview Of Line And Cable Routing On Front Intake-Air Distributor

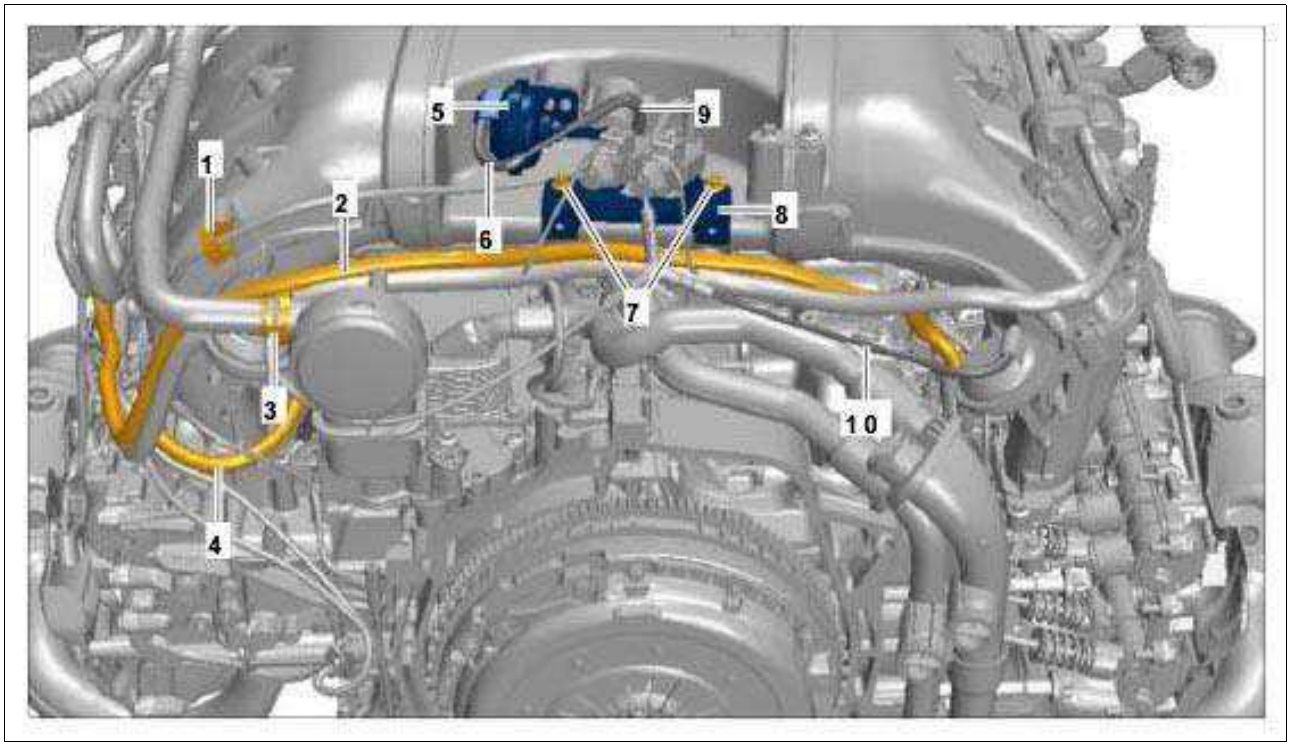

Courtesy of PORSCHE CARS NORTH AMERICA, INC.

1. Omega clip for
2. Main wiring harness
3. Positive crankcase ventilation line connection on oil separator
4. Auxiliary wiring harness
5. Vacuum unit for tuning flap
6. Vacuum line
7. Screws, M6 x 16, for control valve holder
8. Holder for control valves
9. Control valve connection
10. Vacuum line for vacuum units for intake pipes

WM 244619 REMOVING AND INSTALLING INTAKE-AIR DISTRIBUTOR (X51) (CARRERA S, CARRERA GTS, CARR. S CABRIO, CARR. CABRIO, CARRERA 4S, CARRERA 4 GTS, TARGA 4S, TARGA 4 GTS, CARR. 4S CABRIO, CARR. 4 GTS CABRIO) > REMOVING INTAKE-AIR DISTRIBUTOR > REMOVING INTAKE-AIR DISTRIBUTOR - BANK 1-3

1. Loosen connecting holder **-1-** between the intake-air distributor and left resonance tube.

1. 1.1. Unscrew screws (M6 x 16 **-2-** and M6 x 12 **-3-**) and remove connecting holder.
2. 1.2. Disconnect cable plugs **-4-** for control valves for tuning flap.

Fig 1: Connecting Holder Between Intake-Air Distributor And Resonance Tube 1-3

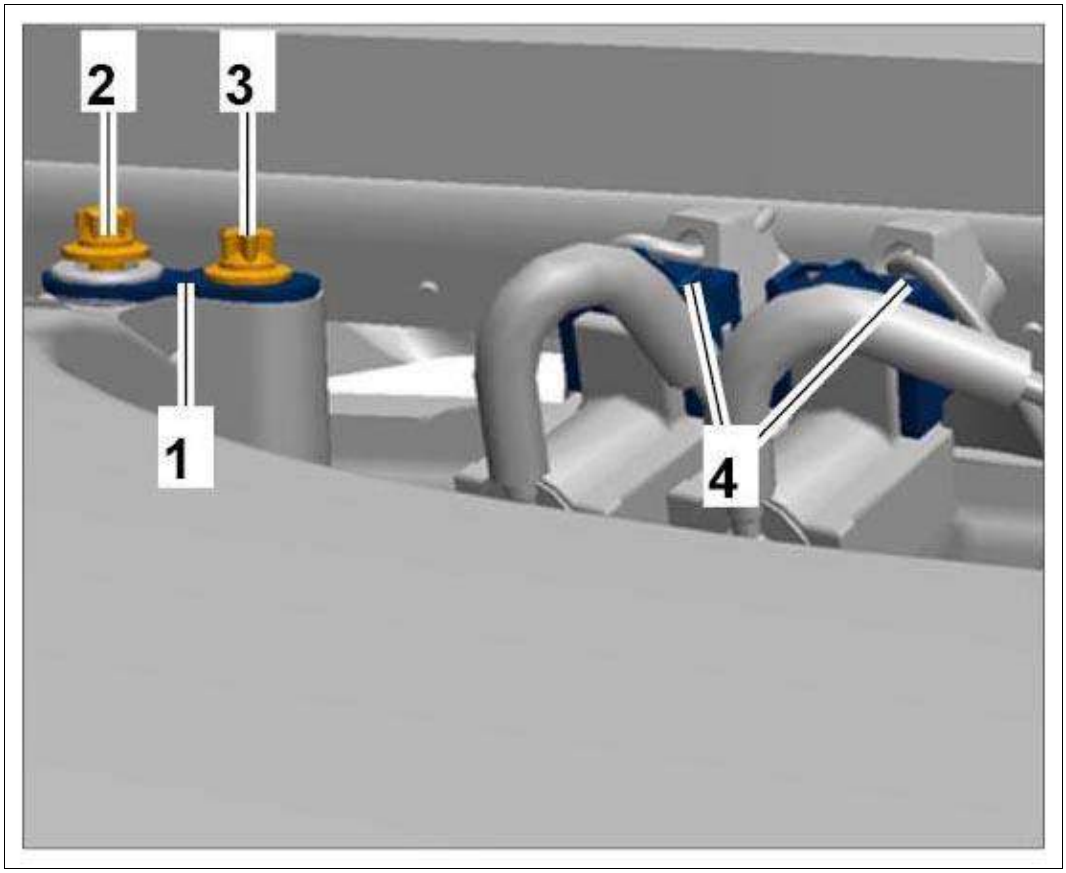

Courtesy of PORSCHE CARS NORTH AMERICA, INC.

2. Unscrew screws **-1-** on intake-air distributor for bank 1-3.

Fig 2: Overview Of Intake-Air Distributor Threaded Joint

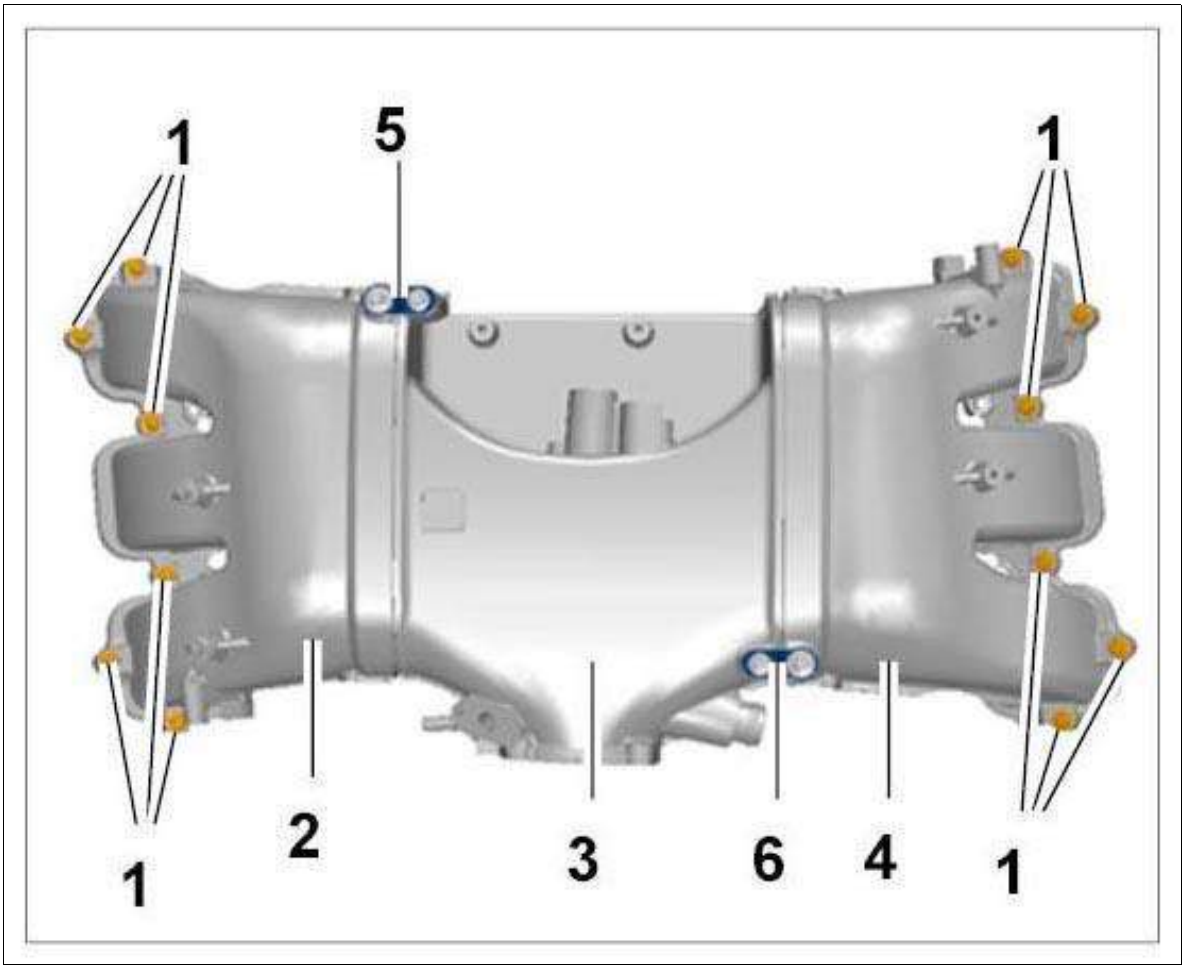

Courtesy of PORSCHE CARS NORTH AMERICA, INC.

1. External Torx screws, M6 x 30
2. Intake-air distributor, bank 1-3
3. Resonance tube
4. Intake-air distributor, bank 4-6
5. Left connecting holder
6. Right connecting holder

3. Move intake-air distributor for bank 1-3 **-1-** to the rear and remove it from the engine compartment.

    1. 3.1. Replace seal **-2-** for the resonance tube and carefully clean the sealing faces.

Fig 3: Identifying Intake Distributor For Bank 1-3

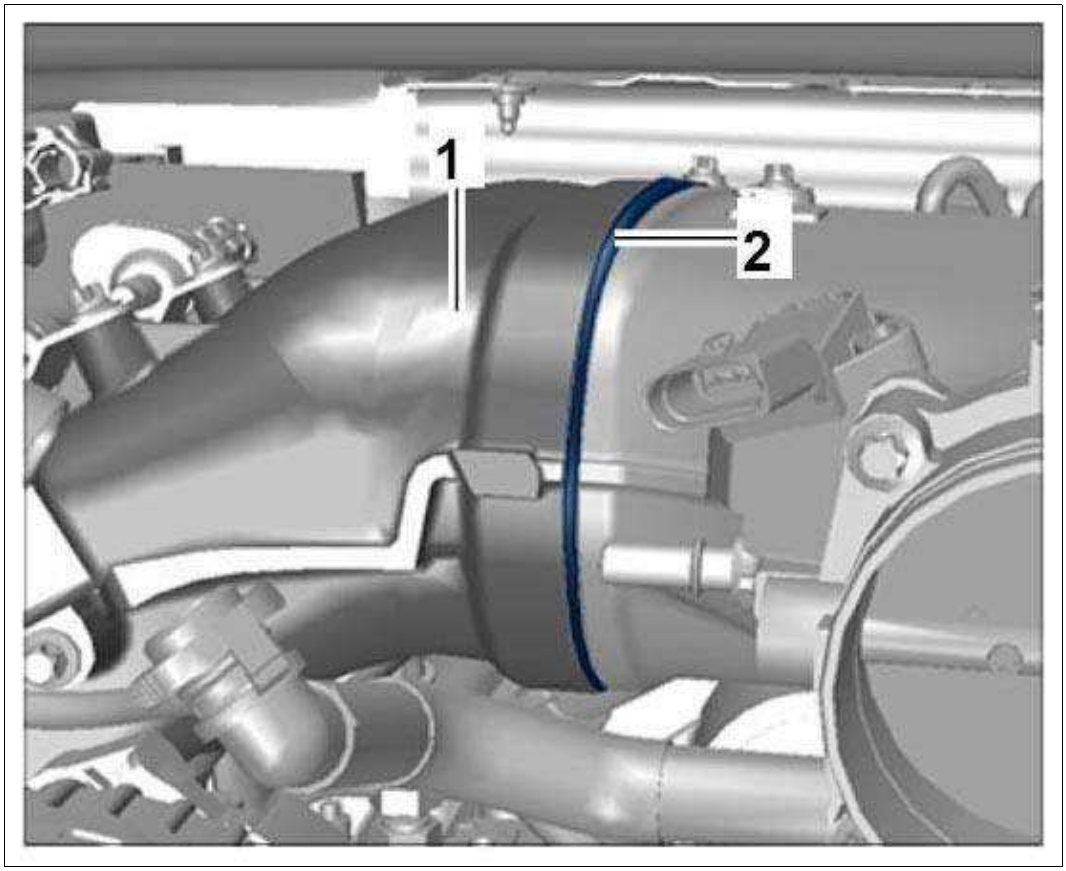

Courtesy of PORSCHE CARS NORTH AMERICA, INC.

4. Replace seal **-1-** on the intake pipe support.

Fig 4: Identifying Seal On Intake Pipe Support

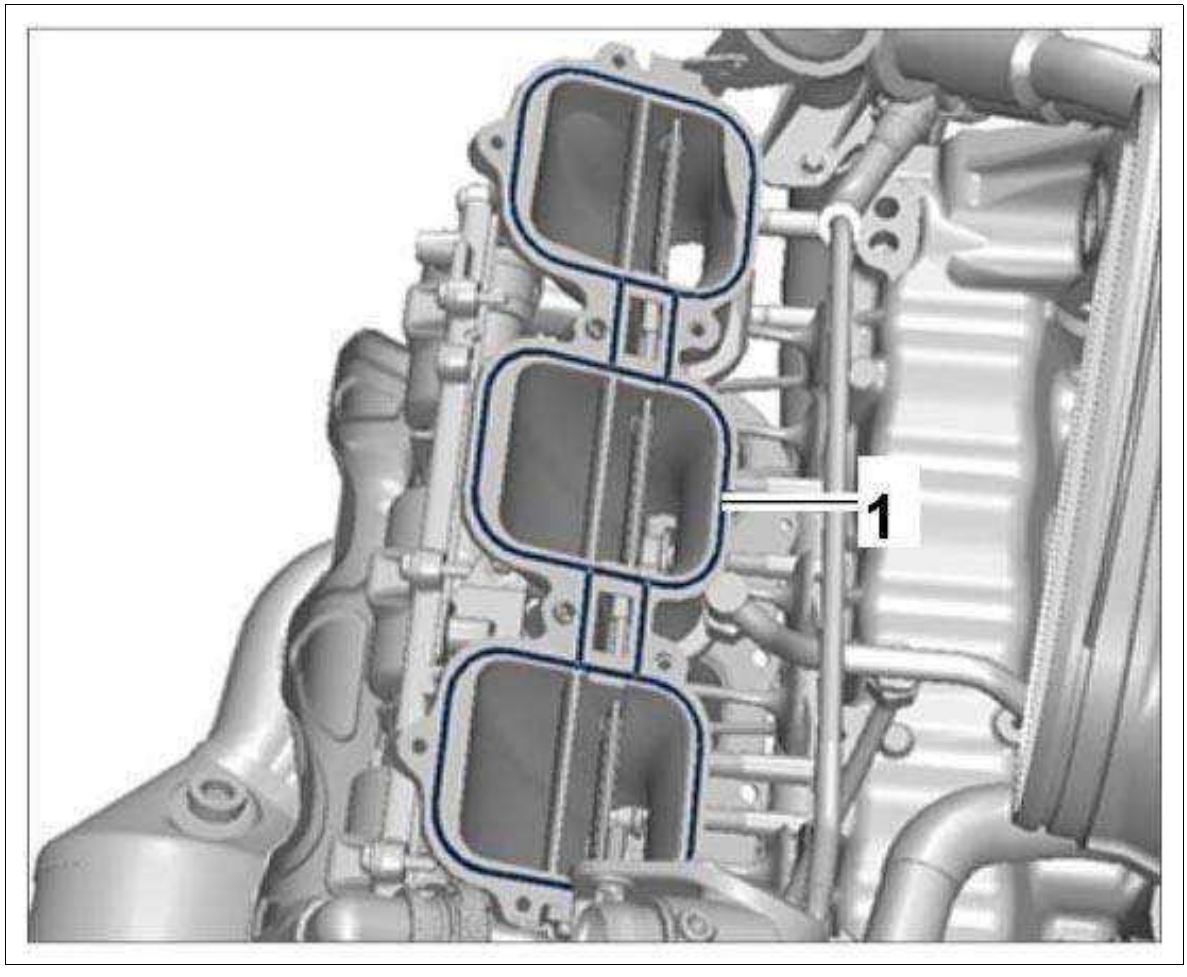

Courtesy of PORSCHE CARS NORTH AMERICA, INC.

5. The intake-air distributor can be cleaned in a parts washer without aggressive cleaning agents.

6. Carefully clean and cover sealing faces on intake pipe support.

WM 244619 REMOVING AND INSTALLING INTAKE-AIR DISTRIBUTOR (X51) (CARRERA S, CARRERA GTS, CARR. S CABRIO, CARR. CABRIO, CARRERA 4S, CARRERA 4 GTS, TARGA 4S, TARGA 4 GTS, CARR. 4S CABRIO, CARR. 4 GTS CABRIO) > REMOVING INTAKE-AIR DISTRIBUTOR > REMOVING INTAKE-AIR DISTRIBUTOR - BANK 4-6

1. Loosen connecting holder **-1-** between the intake-air distributor and right resonance tube and positive crankcase ventilation line.

    1. 1.1. Unscrew screws (M6 x 16 **-2-** and M6 x 12 **-3-**) and remove connecting holder.

    2. 1.2. Disconnect positive crankcase ventilation line **-4-** at the connection piece for the resonance tube.

Fig 1: Connecting Holder Between Intake-Air Distributor And Resonance Tube And Bank 4-6

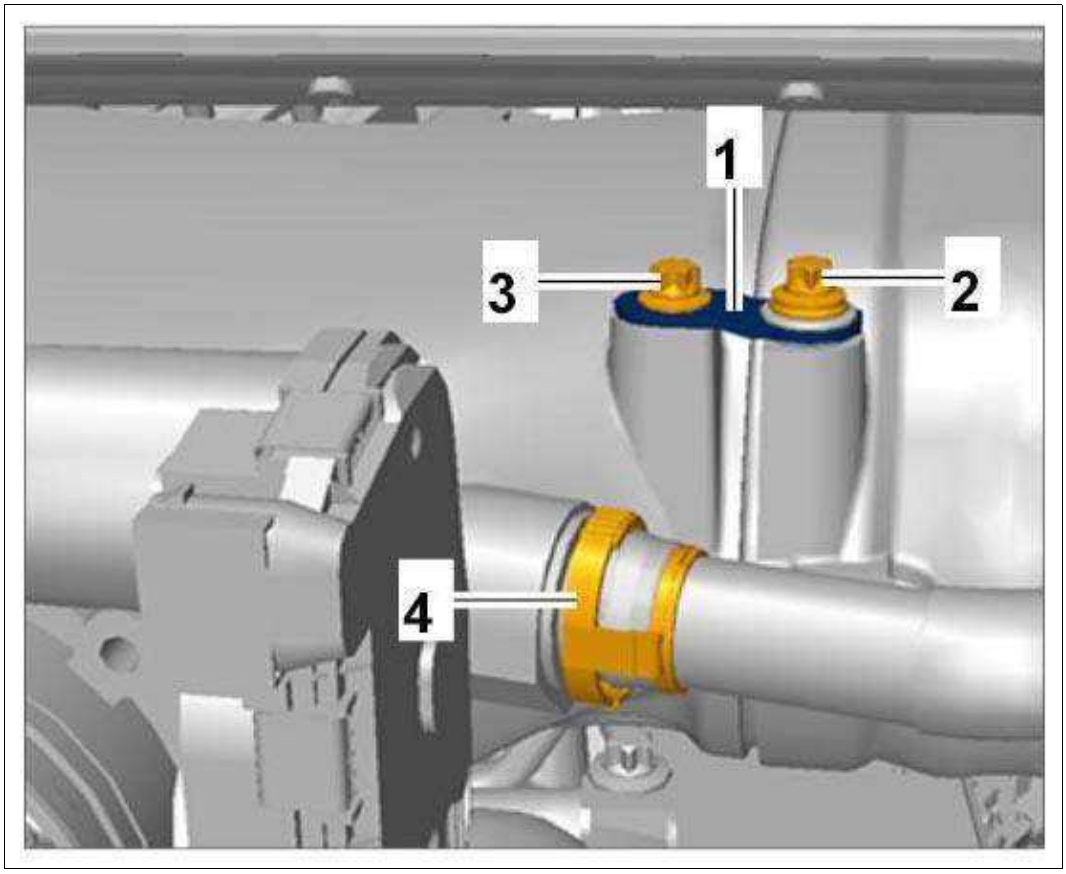

Courtesy of PORSCHE CARS NORTH AMERICA, INC.

2. Pull off wiring harness clip at the front intake-air distributor and unclip positive crankcase ventilation line **-2-** .

    1. 2.1. Open Omega clip **-1-** for vacuum line at the front intake-air distributor.

Fig 2: Identifying Wiring Harness Clip On Intake-Air Distributor And Bank 4-6

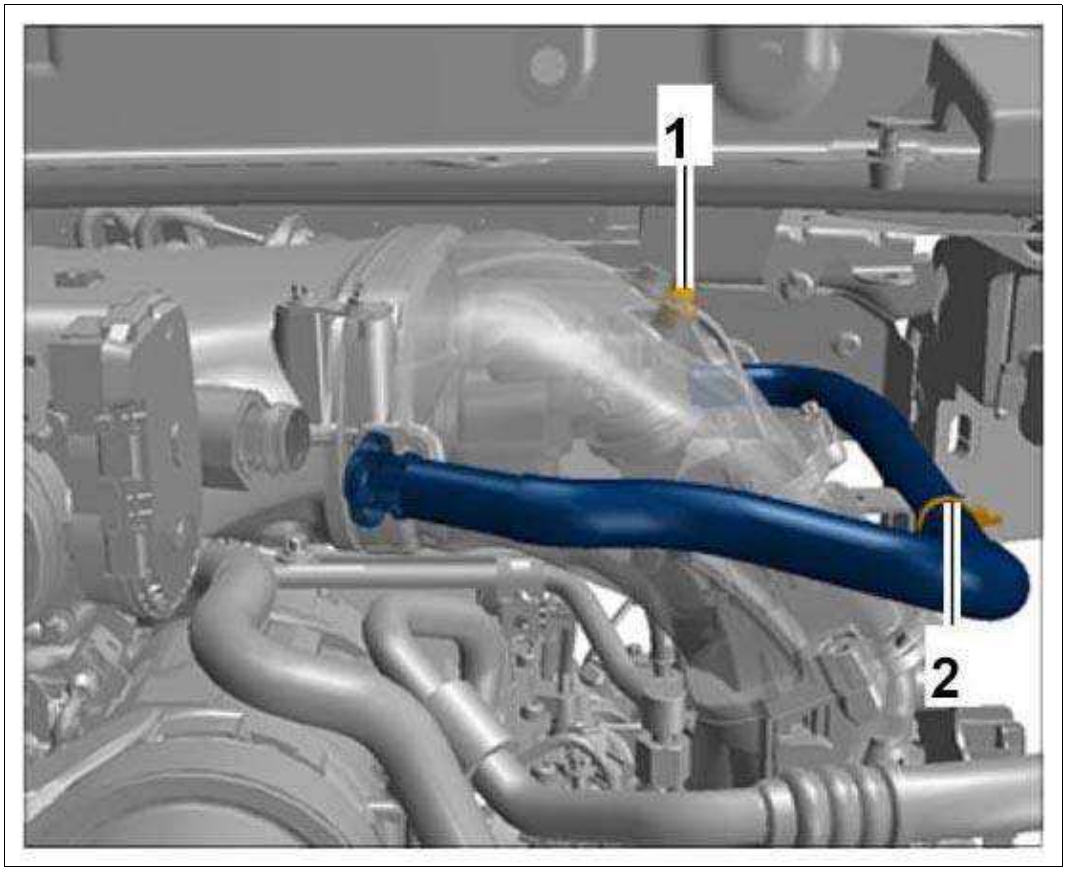

Courtesy of PORSCHE CARS NORTH AMERICA, INC.

3. Unscrew screws on intake-air distributor for bank 4-6.

Fig 3: Overview Of Intake-Air Distributor

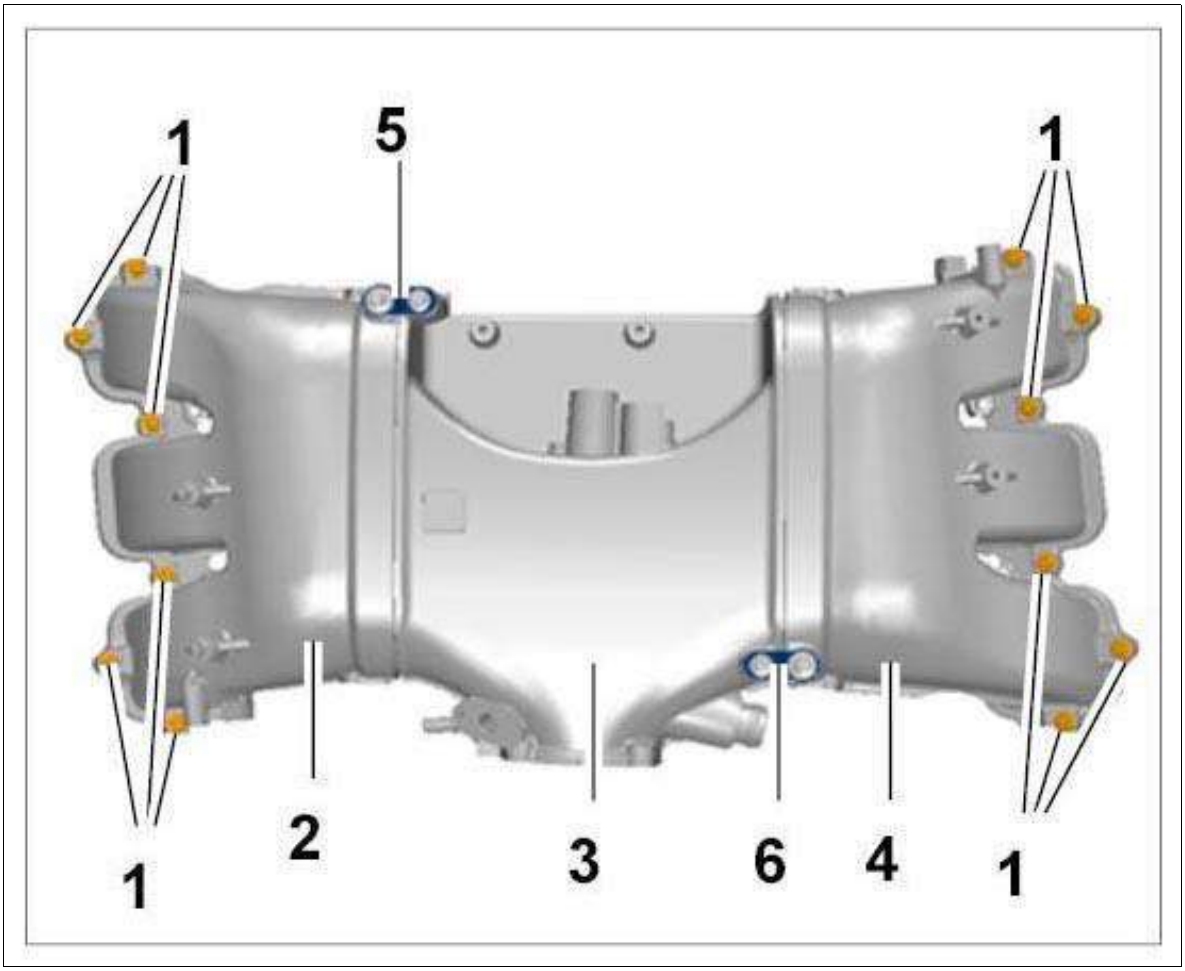

Courtesy of PORSCHE CARS NORTH AMERICA, INC.

1. External Torx screws, M6 x 30
2. Intake-air distributor, bank 1-3
3. Resonance tube
4. Intake-air distributor, bank 4-6
5. Left connecting holder
6. Right connecting holder

4. Move intake-air distributor to the rear and remove it from the engine compartment.
    1. 4.1. Replace seals and carefully clean the sealing faces.
5. Dispose of seal on intake pipe support and check dowel sleeves for damage.
    1. 5.1. Replace dowel sleeves if necessary and press in by hand - max. projection: 4 mm.
    2. 5.2. Replace seal **-1-** .

Fig 4: Identifying Seal On Intake Pipe Support 4-6

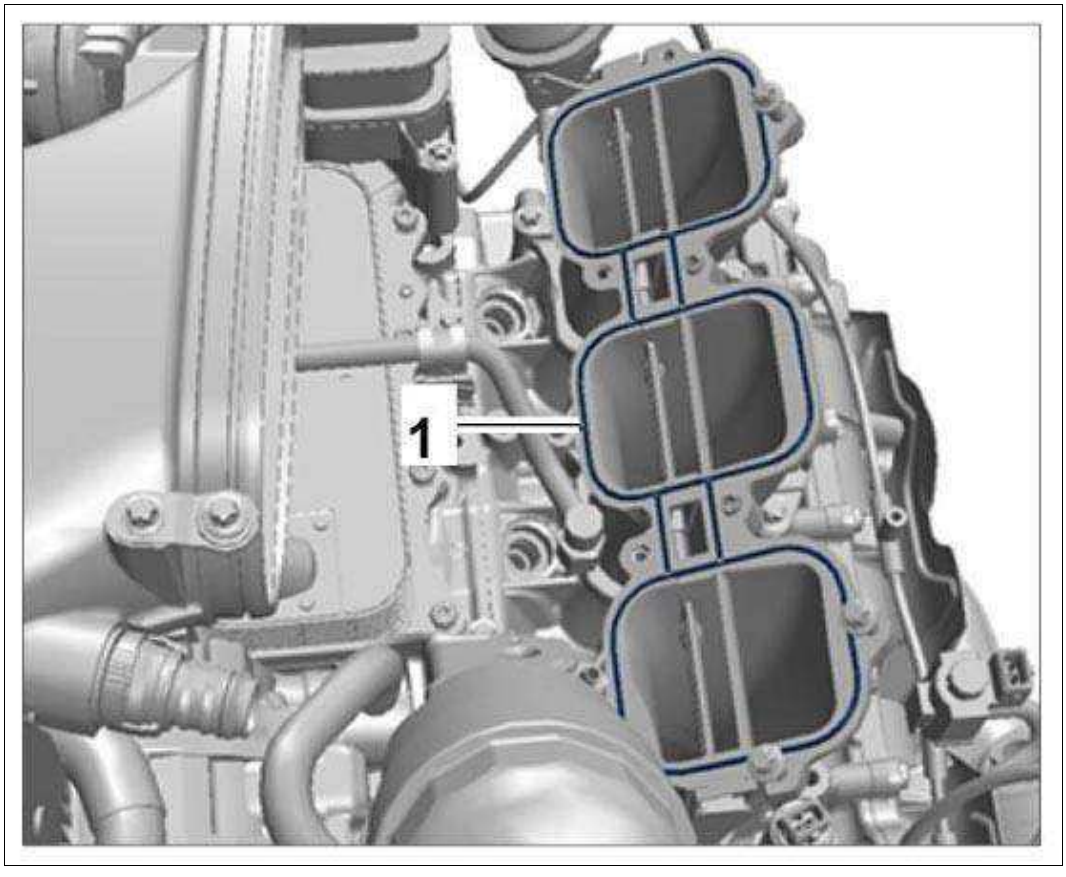

Courtesy of PORSCHE CARS NORTH AMERICA, INC.

6. The intake-air distributor can be cleaned in a parts washer without aggressive cleaning agents.

7. Carefully clean and cover sealing faces on intake pipe support.

WM 244619 REMOVING AND INSTALLING INTAKE-AIR DISTRIBUTOR (X51) (CARRERA S, CARRERA GTS, CARR. S CABRIO, CARR. CABRIO, CARRERA 4S, CARRERA 4 GTS, TARGA 4S, TARGA 4 GTS, CARR. 4S CABRIO, CARR. 4 GTS CABRIO) > INSTALLING INTAKE-AIR DISTRIBUTOR

1. Grease sealing ring on resonance tube with a light coating of Kluber Syntheso Glep (Part No. 000.043.204.68).

2. Fit new seal **-1-** on the intake pipe support.

Fig 1: View Of Seal On Intake Pipe Support 4-6

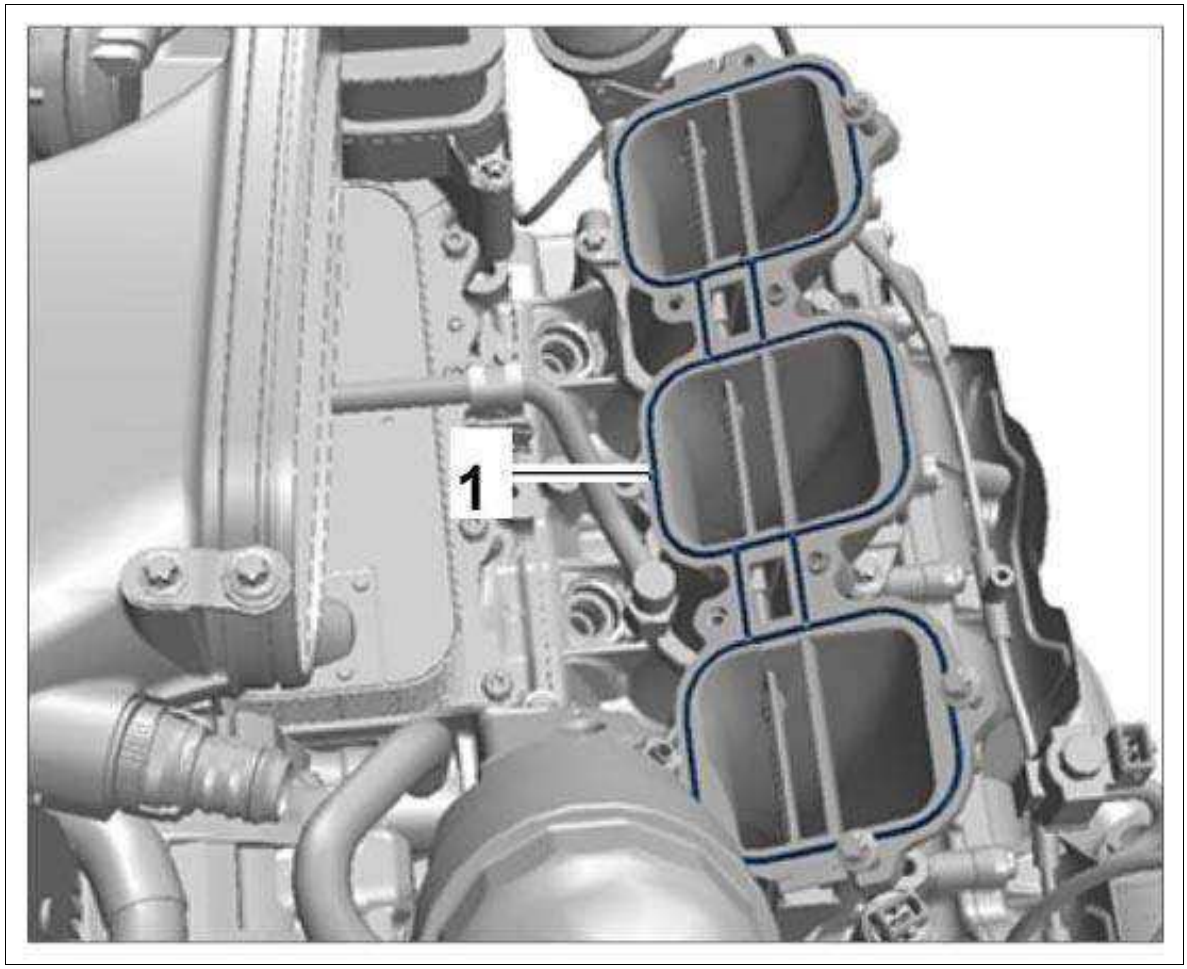

Courtesy of PORSCHE CARS NORTH AMERICA, INC.

1. 2.1. Apply a thin bead (approx. 1 mm thick and 30 mm long) of Dobo Seal 224 sealant (Part No. 000.043.207.31) in the shifting shaft seal area.

   Sealant must not get into the intake duct during assembly!

   Drying time: 3 minutes - install intake-air distributor within this time!

2. 2.2. Fit a new seal and grease with a light coating of Kluber Syntheso Glep (Part No. 000.043.204.68) **(not in the sealant area!)** .

   1. Screws, M6 x 25

   2. Intake pipe support

Fig 2: Locating Intake Manifold

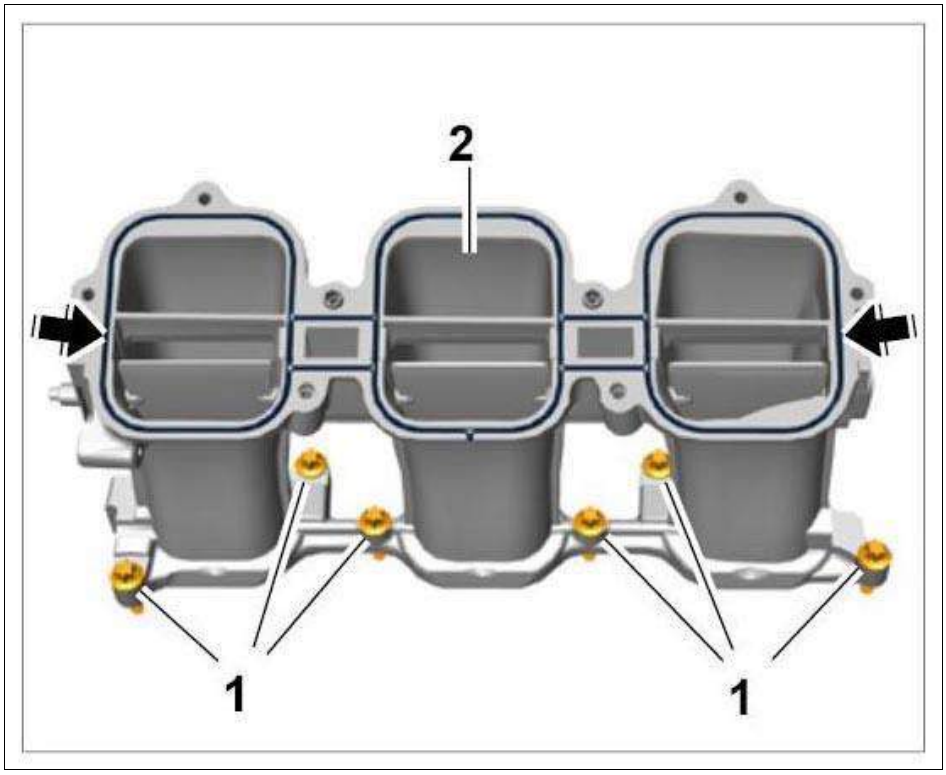

Courtesy of PORSCHE CARS NORTH AMERICA, INC.

3. Insert intake-air distributor at the resonance tube and carefully fit it on the intake pipe support.

   Check dowel sleeves!

   1. 3.1. Fit M6 x 30 screws. Use a bar magnet.
   2. 3.2. Fit and tighten screws according to the specified tightening sequence.

      Tightening torque 13 Nm (9.5 ftlb.) +/-2 Nm (+/-1.5 ftlb.)

      Always tighten diagonally opposite screws (7 and 8) last!

Fig 3: Intake-Air Distributor Screws Tightening Sequence

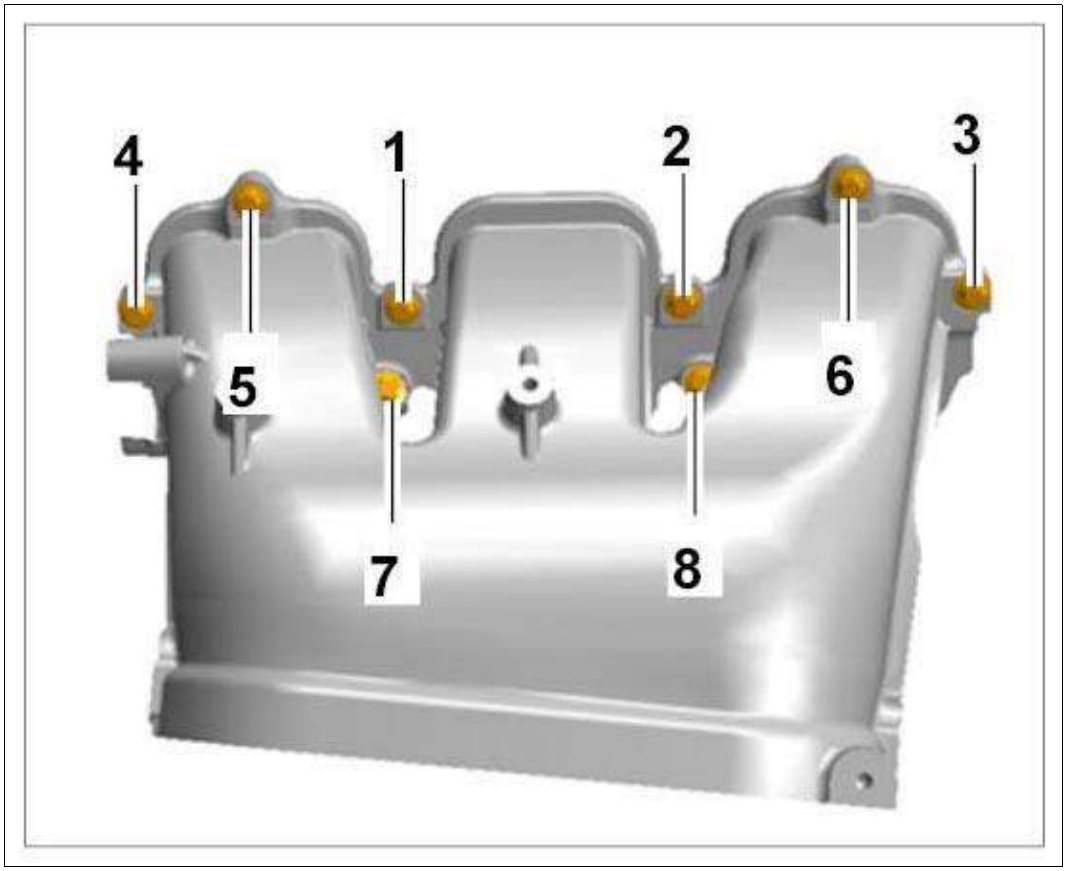

Courtesy of PORSCHE CARS NORTH AMERICA, INC.

4. Remove residual sealant in the shifting shaft area.
5. Install left or right connecting holder **-1-** on the intake-air distributor (shown on cylinder bank 4-6).

    1. 5.1. Fit and tighten screws **-2 and 3-** .

    Tightening torque 6 Nm (4.5 ftlb.) +1 Nm (+0.5 ftlb.)

        1. Connecting holder
        2. Screw, M6 x 16
        3. Screw, M6 x 12
        4. Positive crankcase ventilation line connection on cylinder bank 4-6

Fig 4: Connecting Holder Between Intake-Air Distributor And Resonance Tube, Bank 4-6

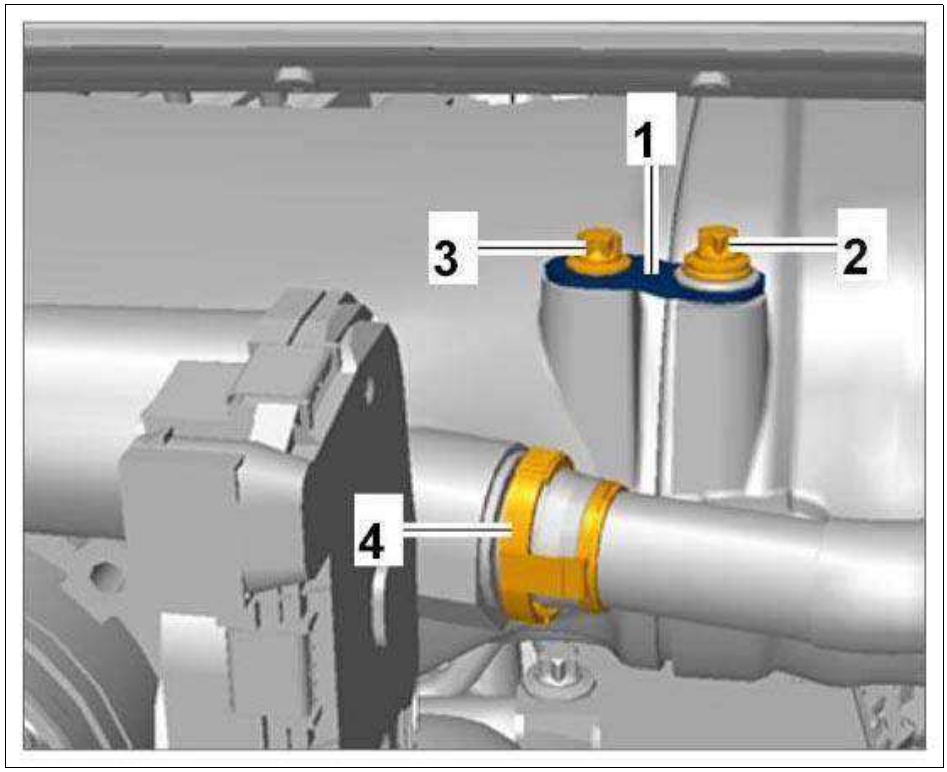

Courtesy of PORSCHE CARS NORTH AMERICA, INC.

WM 244619 REMOVING AND INSTALLING INTAKE-AIR DISTRIBUTOR (X51) (CARRERA S, CARRERA GTS, CARR. S CABRIO, CARR. CABRIO, CARRERA 4S, CARRERA 4 GTS, TARGA 4S, TARGA 4 GTS, CARR. 4S CABRIO, CARR. 4 GTS CABRIO) > SUBSEQUENT WORK

1. **Work required for cylinder bank 4-6:**
    1. 1.1. Connect positive crankcase ventilation line.
    2. 1.2. Secure wiring harness to the front intake-air distributor using an Omega clip.
    3. 1.3. Install DME engine control module with holder.

       → Installing DME Control Unit .
    4. 1.4. Connect cable plugs for DME control unit and connector strip for the body.
2. **Work required for cylinder bank 1-3:**
    1. 2.1. Install tank vent valve.
    2. 2.2. Install connection piece for oil filler hose and positive crankcase ventilation lines and tighten micro-self-locking screws.

       Tightening torque 10 Nm (7.5 ftlb.)
    3. 2.3. Install upper cover **-3-** for drive belt. Fit and tighten screws **-4-** .

→ **Tightening torque: 10 Nm (7.5 ftlb.)**

Fig 1: Identifying Cable Plugs And Drive Belt Cover

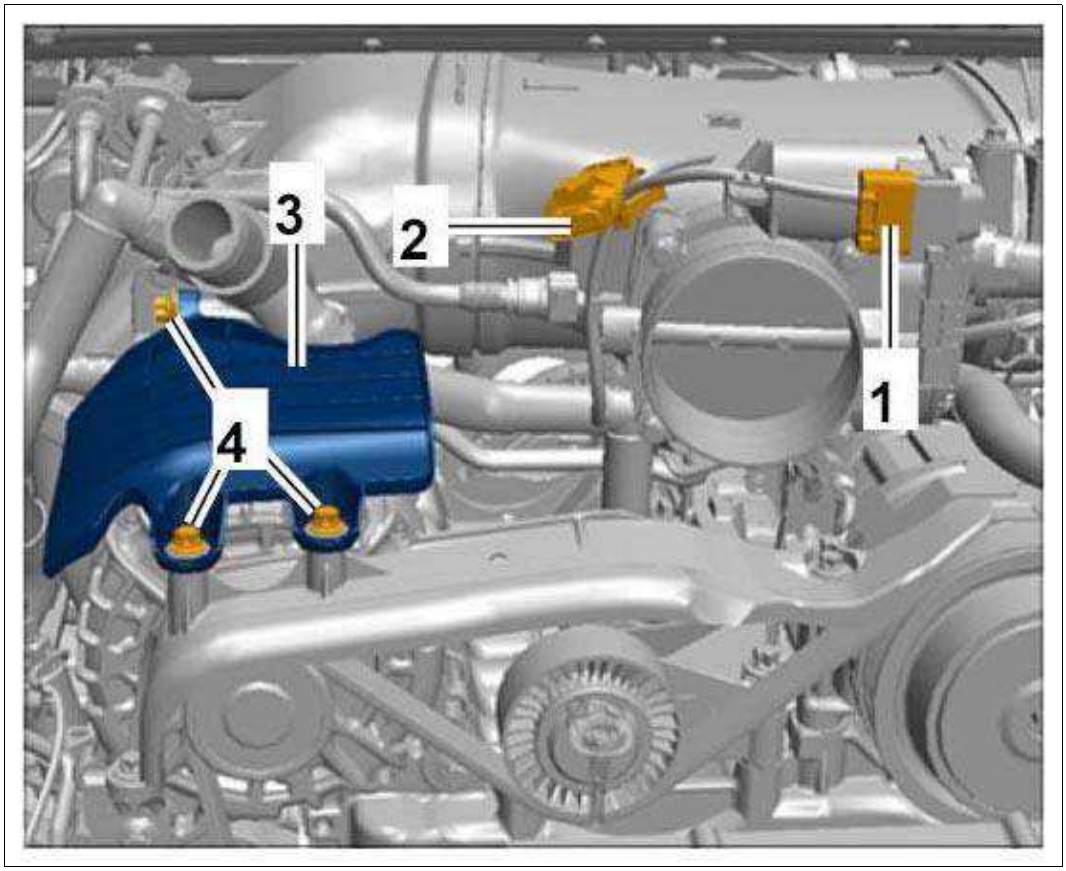

Courtesy of PORSCHE CARS NORTH AMERICA, INC.

4. 2.4. Connect positive crankcase ventilation lines and fit oil filler hose using a spring band clamp.

> *WARNING: Danger of objects or loads falling down*
>
> *1. Risk of squashing or crushing*

→ Secure components to prevent them from falling down.

3. Slowly raise the engine to installation position using a jack **hydraulic garage jack H 2 SL WE 1032** .

4. Tighten two M12 collar nuts on the left and right engine mount.

   Tightening torque 85 Nm (63 ftlb.)

5. Secure rear axle carrier.

   → 420609 LOOSENING AND SECURING REAR-AXLE CROSS MEMBER .

   1. 5.1. Tighten fastening screws on both sides.

6. **On Cabriolet and Targa vehicles: Install support plate.**

   → 421419 REMOVING AND INSTALLING SUPPORT PLATE .

7. Install cover for rear underbody.

   → 519419 REMOVING AND INSTALLING COVER FOR REAR UNDERBODY .

8. Install heat shield **-1-** for air cleaner.

   1. 8.1. Screw on speed nuts **-2-** .

   Fig 2: Identifying Air Cleaner Heat Shield

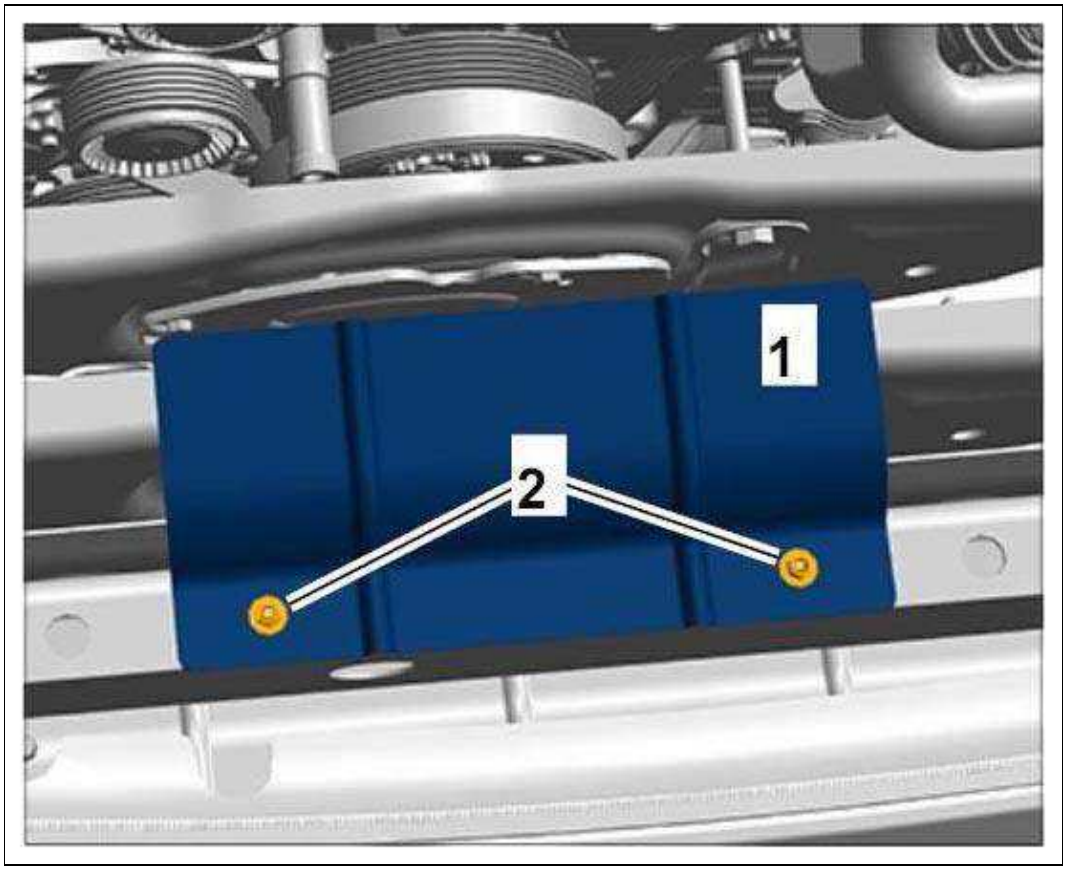

Courtesy of PORSCHE CARS NORTH AMERICA, INC.

9. Install air cleaner housing.

   → Installing Air Cleaner Housing .

10. Connect the battery.

    → 2X00IN WORK INSTRUCTIONS AFTER DISCONNECTING THE BATTERY .

11. **On Targa vehicles: Close the Targa roof!**

    → 6101IN CONVERTIBLE-TOP SERVICE POSITION .

12. Complete the vehicle.

WM 244719 REMOVING AND INSTALLING INTAKE MANIFOLD (X51) (CARRERA S,

CARRERA GTS, CARR. S CABRIO, CARR. CABRIO, CARRERA 4S, CARRERA 4 GTS, TARGA 4S, TARGA 4 GTS, CARR. 4S CABRIO, CARR. 4 GTS CABRIO) > TECHNICAL VALUES

Location	Description	Type	Basic value	Tolerance 1	Tolerance 2
Intake manifold (X51) to cylinder head	Screw, M6 x 25	Tightening torque	13 Nm (9.5 ftlb.)		
Holder to intake-air distributor and intake manifold (X51)	M6 screw	Tightening torque	10 Nm (7.5 ftlb.)		
Holder for wire harness for intake manifold 1-3, front	Screw, M6 x 12	Tightening torque	10 Nm (7.5 ftlb.)		

WM 244719 REMOVING AND INSTALLING INTAKE MANIFOLD (X51) (CARRERA S, CARRERA GTS, CARR. S CABRIO, CARR. CABRIO, CARRERA 4S, CARRERA 4 GTS, TARGA 4S, TARGA 4 GTS, CARR. 4S CABRIO, CARR. 4 GTS CABRIO) > REMOVING INTAKE MANIFOLD

Intake manifold 1-3:

1. Loosen holder **-1-** for wiring harness and engine compartment temperature sensor.

    1. 1.1. Unscrew screws **-2-** and move the holder aside.

Fig 1: Identifying Wiring Harness Holder And Engine Temperature Sensor, Bank 1-3

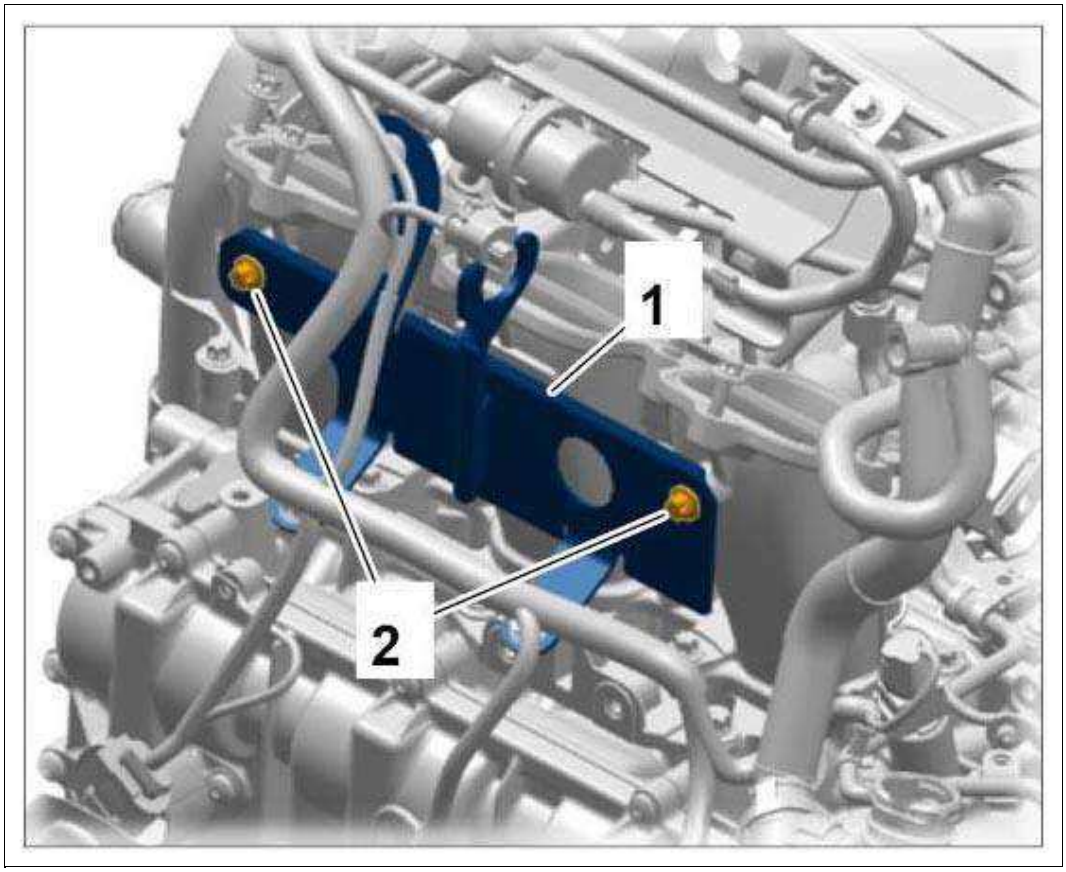

Courtesy of PORSCHE CARS NORTH AMERICA, INC.

Intake manifold 4-6:

2. Loosen holder **-1-** for wiring harness and control valves.

    1. 2.1. Unclip control valves and disconnect cable plugs if necessary.
    2. 2.2. Unscrew screws **-2-** and move the holder aside.

Fig 2: Identifying Wiring Harness Holder And Control Valves, Bank 4-6

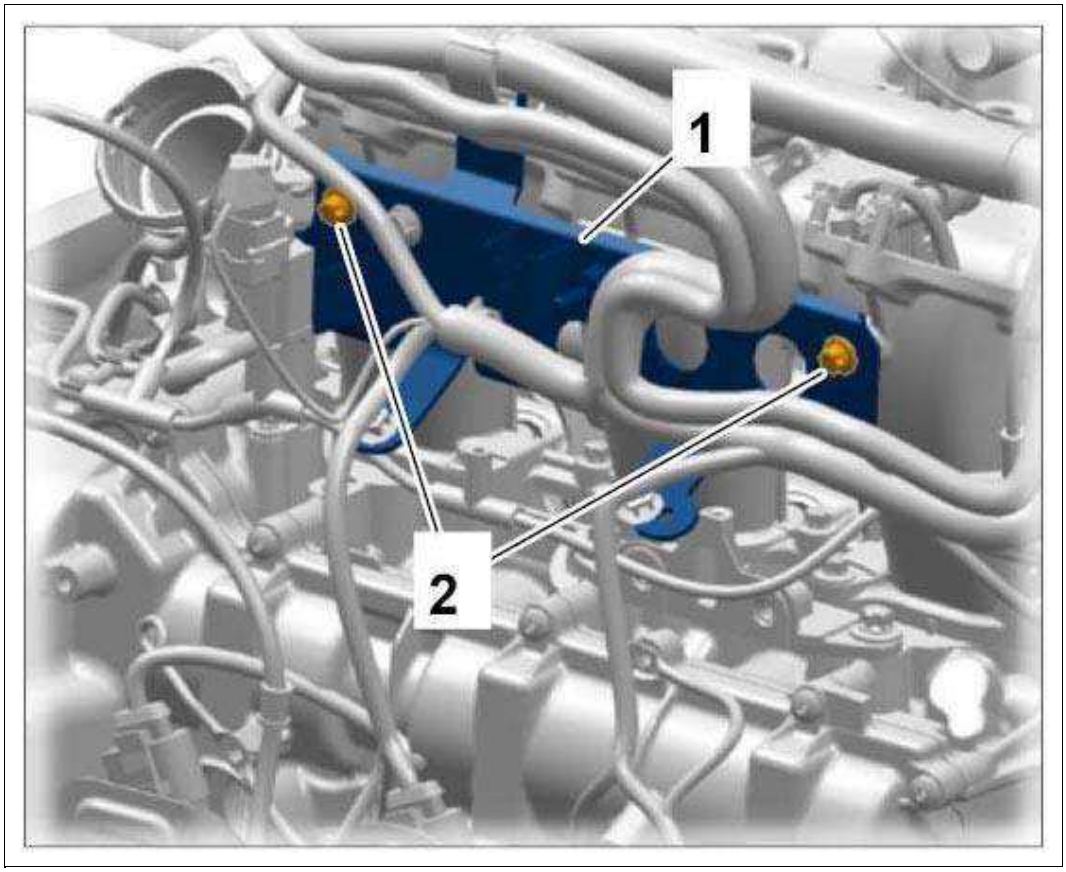

Courtesy of PORSCHE CARS NORTH AMERICA, INC.

3. Loosen holder **-2-** for wiring harness **-1-** at the front of intake manifold 4-6.

    1. 3.1. Cut open tie-wrap or unscrew screw **-3-** .

Fig 3: Identifying Intake Manifold Wiring Harness Holder 4-6 (Front)

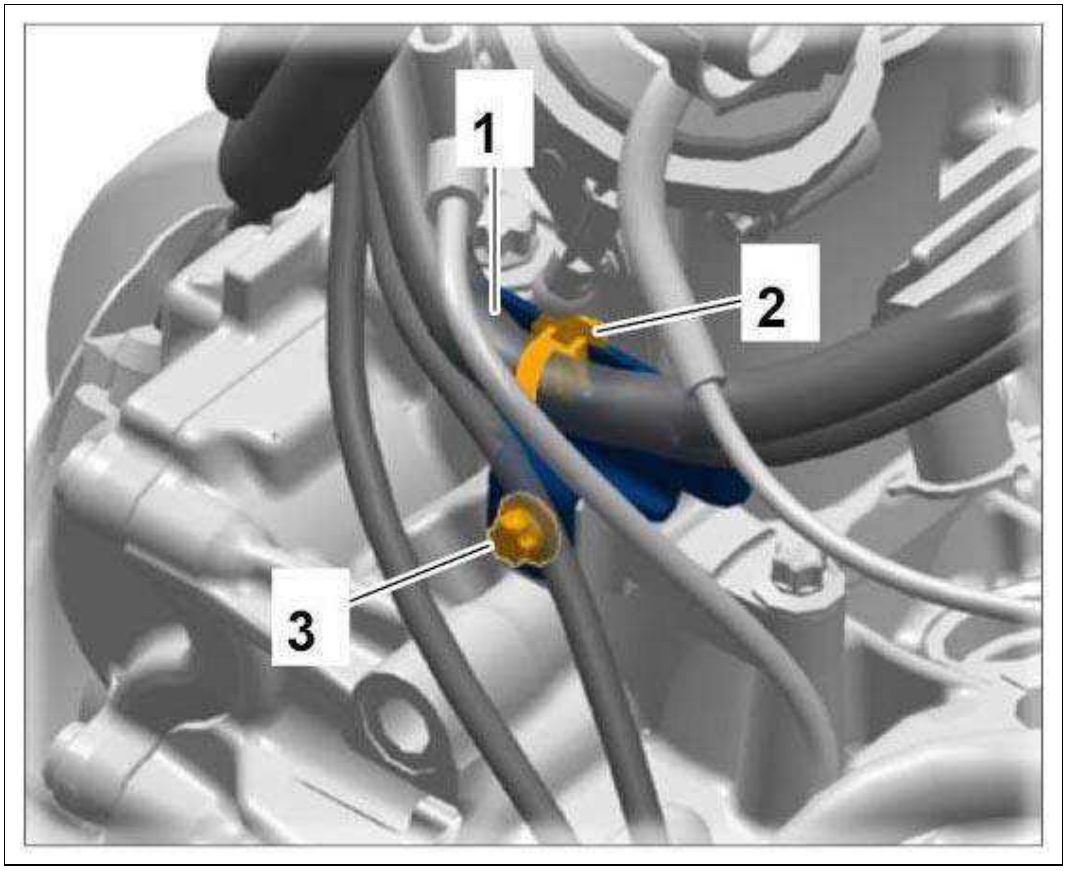

Courtesy of PORSCHE CARS NORTH AMERICA, INC.

Both sides:

4. Disconnect vacuum line on vacuum unit.
5. Loosen screws on intake manifold.

Do not unscrew screws fully as a loss preventer is fitted.

1. Intake manifold
2. Tool
3. Seal for intake-air distributor

Fig 4: Tightening Intake Manifold Screws

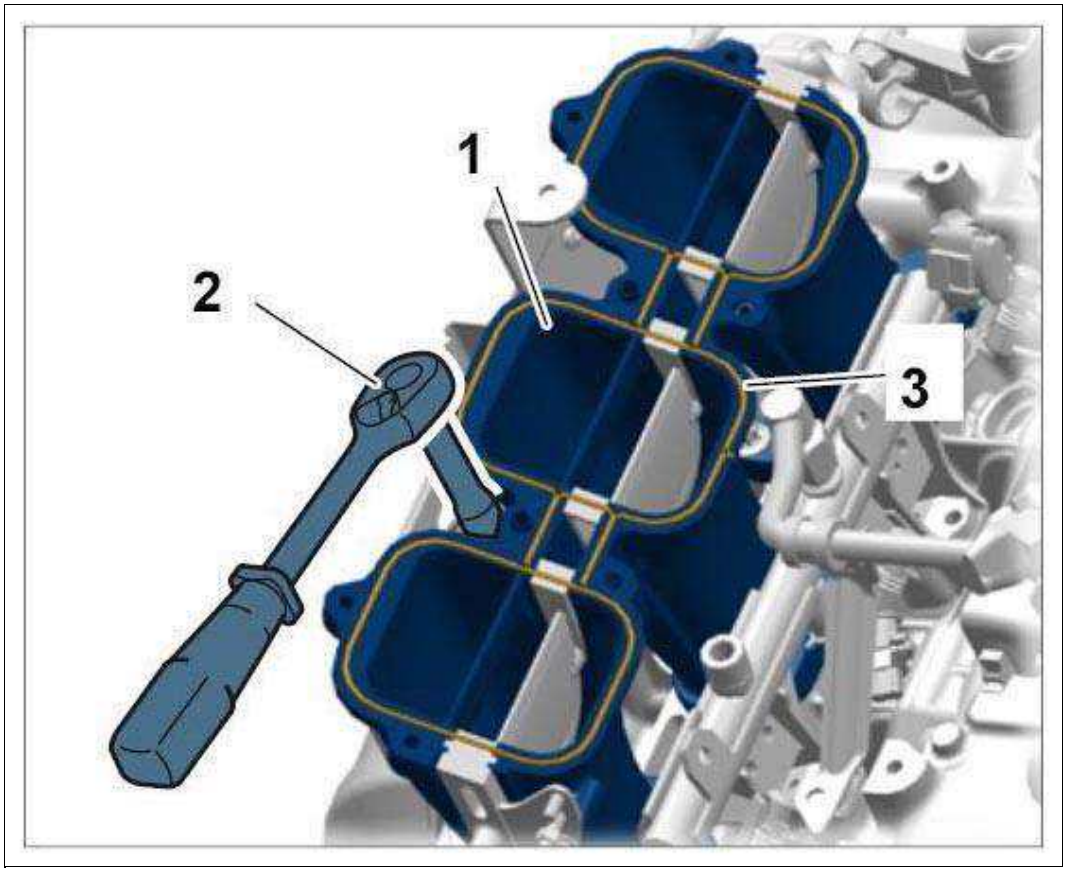

Courtesy of PORSCHE CARS NORTH AMERICA, INC.

1. 5.1. Illustration of screw **-1-** and loss preventer **-2-** on intake manifold.

Fig 5: Identifying Intake Manifold Screw

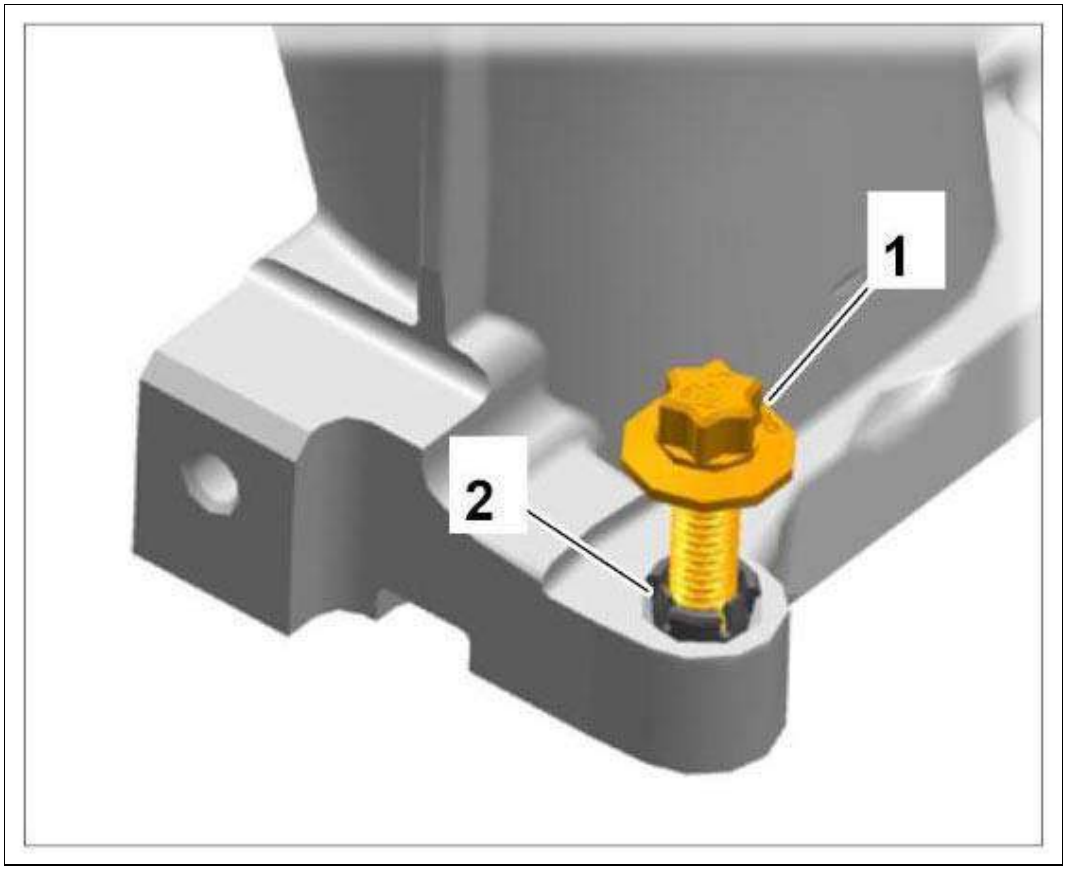

Courtesy of PORSCHE CARS NORTH AMERICA, INC.

6. Clean intake manifold in a parts washer without aggressive cleaning agents.
7. Replace seals on intake manifold.
    1. 7.1. **Cover intake openings!**

WM 244719 REMOVING AND INSTALLING INTAKE MANIFOLD (X51) (CARRERA S, CARRERA GTS, CARR. S CABRIO, CARR. CABRIO, CARRERA 4S, CARRERA 4 GTS, TARGA 4S, TARGA 4 GTS, CARR. 4S CABRIO, CARR. 4 GTS CABRIO) > INSTALLING INTAKE MANIFOLD

1. Fit new seal **-2-** on the bottom of the intake manifold **-1-** and grease with a light coating of Kluber Syntheso Glep (Part No. 000.043.204.68).

Fig 1: Identifying Intake Manifold Seal (Lower)

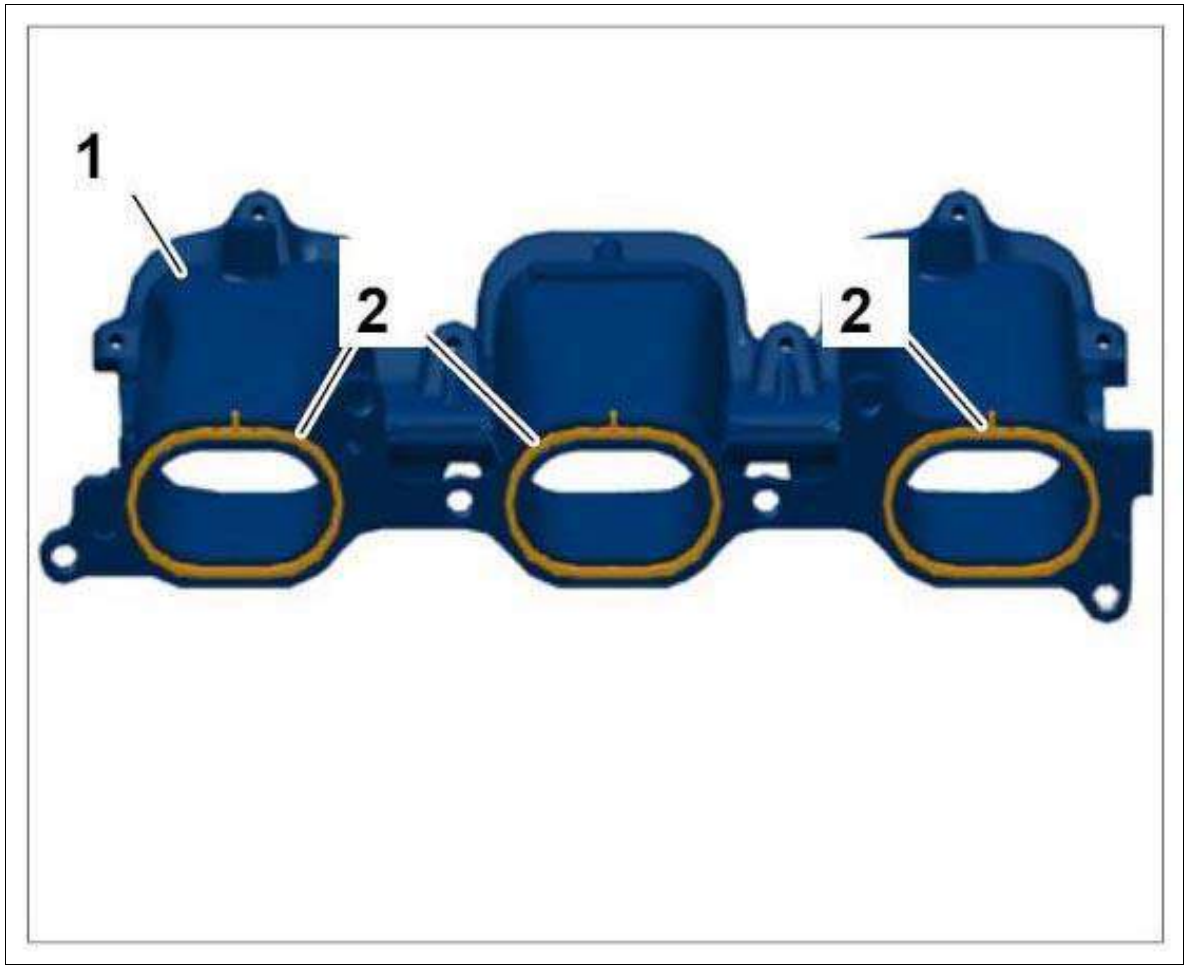

Courtesy of PORSCHE CARS NORTH AMERICA, INC.

2. Position screws **-1-** on the intake manifold. Be careful of the loss preventer **-2-** .

Fig 2: Identifying Intake Manifold Screw

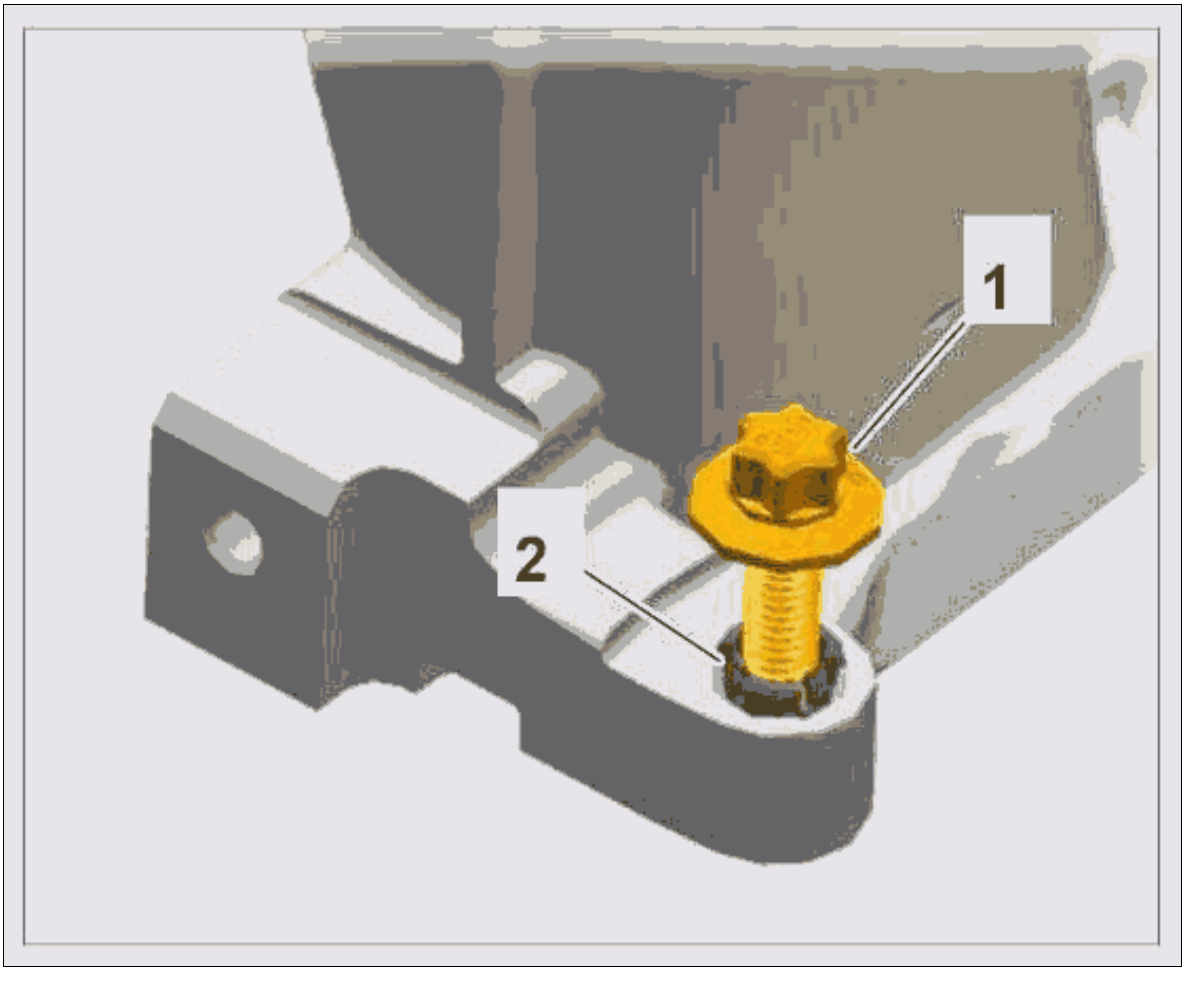

Courtesy of PORSCHE CARS NORTH AMERICA, INC.

3. Insert and position intake manifold.

4. Fit screws and tighten uniformly.

   Tightening torque 13 Nm (9.5 ftlb.)

5. Fit new seal **-1-** on the top of the intake manifold.

   1. 5.1. Grease seal with a light coating of Kluber Syntheso Glep **(avoid the sealant area!)** .

Fig 3: Identifying Intake Manifold Seal, Bank 4-6

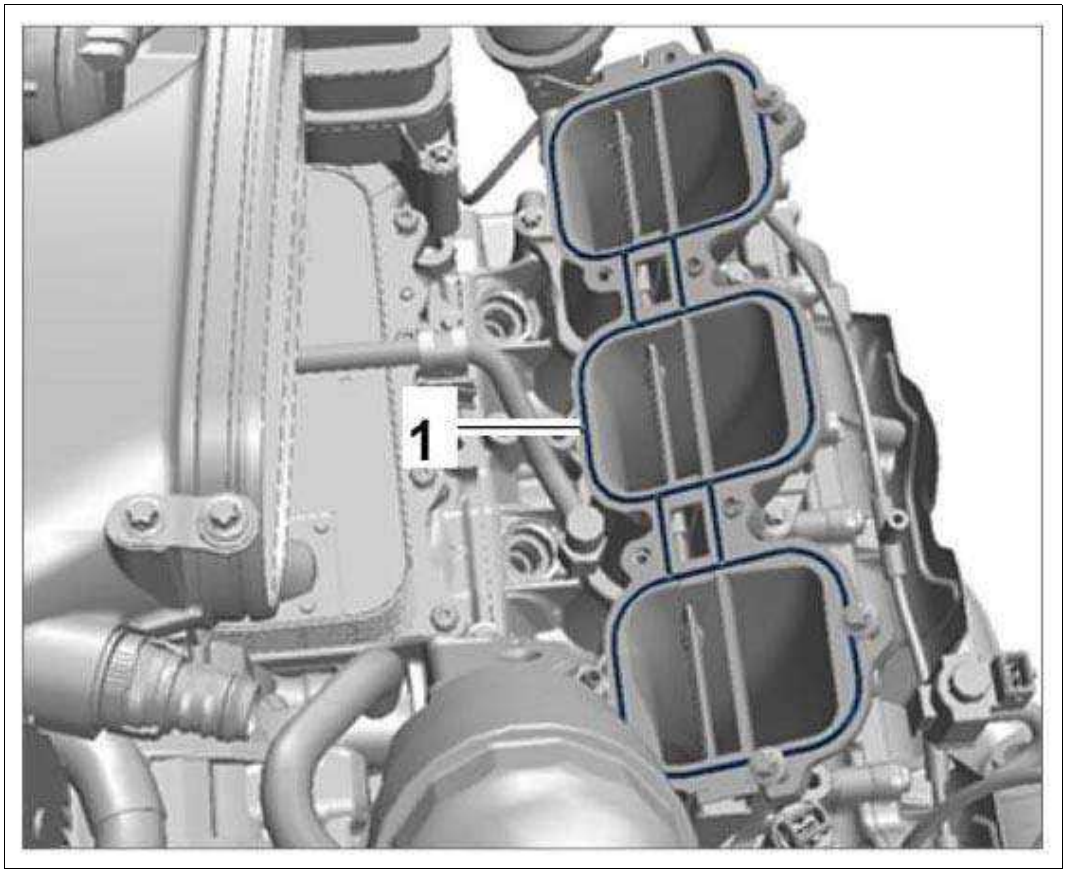

Courtesy of PORSCHE CARS NORTH AMERICA, INC.

6. Secure the relevant holder on the intake manifold using two M6 screws.

   Tightening torque 10 Nm (7.5 ftlb.)

7. Apply a thin bead (approx. 1 mm thick and 30 mm long) of Dobo Seal 224 sealant (Part No. 000.043.207.31) in the shifting shaft seal area **-arrow-** .

   Sealant must not get into the intake duct during assembly!

   Drying time: 3 minutes - install intake-air distributor within this time!

   1. Screws, M6 x 25
   2. Intake manifold

Fig 4: Locating Intake Manifold

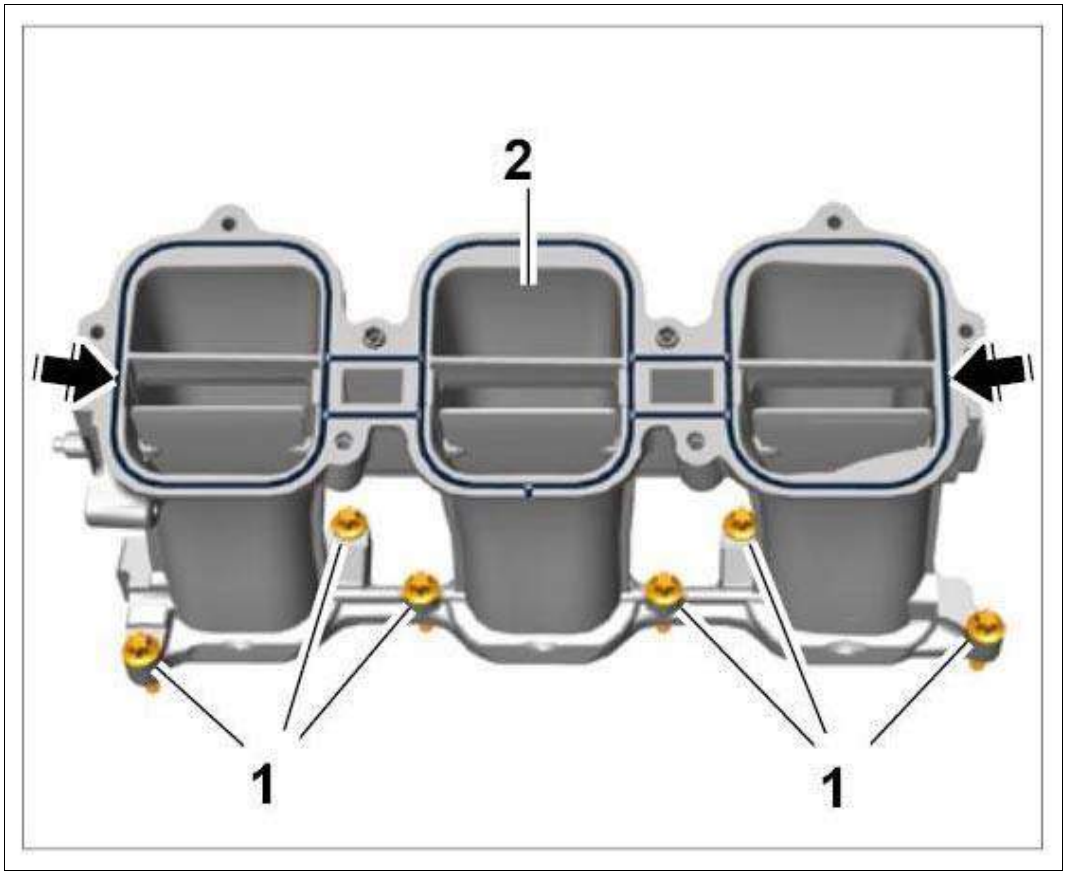

Courtesy of PORSCHE CARS NORTH AMERICA, INC.

8. **Intake manifold, bank 1-3:**

    1. 8.1. Secure the front cable duct to the holder with a new tie-wrap or secure the holder with a screw.

    Tightening torque 10 Nm (7.5 ftlb.)

WM 244719 REMOVING AND INSTALLING INTAKE MANIFOLD (X51) (CARRERA S, CARRERA GTS, CARR. S CABRIO, CARR. CABRIO, CARRERA 4S, CARRERA 4 GTS, TARGA 4S, TARGA 4 GTS, CARR. 4S CABRIO, CARR. 4 GTS CABRIO) > SUBSEQUENT WORK

1. Install intake-air distributor 1-3 or 4-6.

   → Installing Intake-Air Distributor .

2. **For intake manifold 1-3:** Install generator.

   → Installing Generator .

WM 246319 REMOVING AND INSTALLING HIGH-PRESSURE PUMP (EXCEPT CARRERA "EDITION", CARRERA CABRIOLET "EDITION", CARRERA 4 "EDITION", CARRERA 4 CABRIOLET "EDITION", GT3, GT3 RS) > TOOLS

Designation	Type	Number	Description	
Open-jawed wrench insert	Commercially available tool	Nr.95 Pos.1		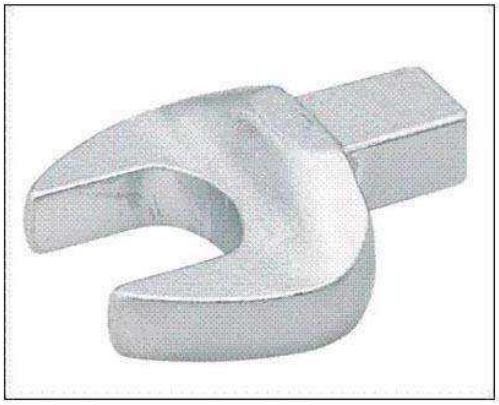
open-jawed wrench insert	Commercially available tool	Nr.95 Pos.2		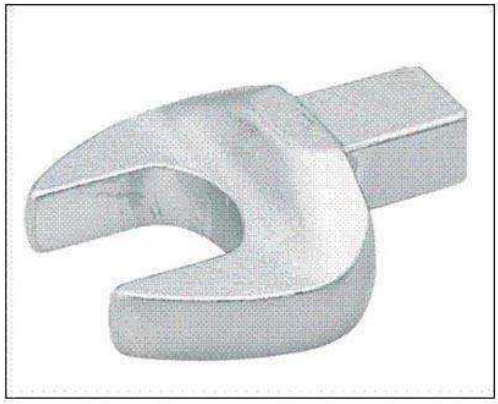
Insert adapter with universal joint	Commercially available tool	Nr.98-1 Pos.3		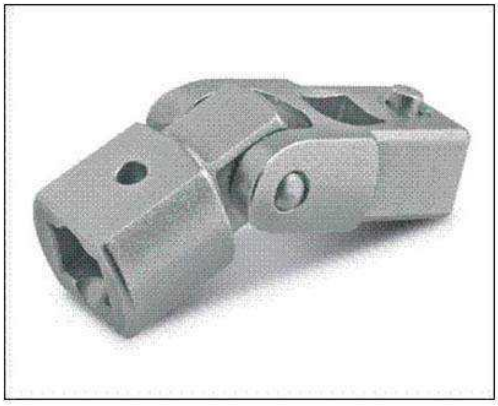

WM 246319 REMOVING AND INSTALLING HIGH-PRESSURE PUMP (EXCEPT CARRERA "EDITION", CARRERA CABRIOLET "EDITION", CARRERA 4 "EDITION", CARRERA 4 CABRIOLET "EDITION", GT3, GT3 RS) > TECHNICAL VALUES

Location	Description	Type	Basic value	Tolerance 1	Tolerance 2
Union nut on fuel high-pressure line (a/f 14)	Coat thread and cone with OKS 1710	Tightening torque	25 Nm (19 ftlb.)		
Union nut on fuel low-pressure line	Coat thread and cone with OKS	Tightening torque	25 Nm (19 ftlb.)		

(a/f 17)	1710		
High-pressure pump and cover to cylinder head	External Torx, M6 x 25	Tightening torque	13 Nm (9.5 ftlb.)
Cover and high-pressure pump to cylinder head	External Torx, M6 x 40	Tightening torque	13 Nm (9.5 ftlb.)
Heat protection to cover	External Torx, M6 x 12	Tightening torque	13 Nm (9.5 ftlb.)
Coolant supply pipe to coolant regulator housing	External Torx, M6 x 25	Tightening torque	13 Nm (9.5 ftlb.)
Mounting for bypass pipe to coolant pipe	Oval-head screw, self-tapping	Initial tightening	3 Nm (2 ftlb.)

WM 246319 REMOVING AND INSTALLING HIGH-PRESSURE PUMP (EXCEPT CARRERA "EDITION", CARRERA CABRIOLET "EDITION", CARRERA 4 "EDITION", CARRERA 4 CABRIOLET "EDITION", GT3, GT3 RS) > PRELIMINARY WORK

1. Disconnect the battery.

   → 2X00IN WORK INSTRUCTIONS AFTER DISCONNECTING THE BATTERY

   > *WARNING: Hot fluid*
   >
   > *1. Danger of scalding*

   → Let the fluid cool down.

   → Wear personal protective gear.

2. Drain coolant.

   → 193817 DRAINING AND FILLING COOLANT (INCLUDES BLEEDING THE SYSTEM) .

WM 246319 REMOVING AND INSTALLING HIGH-PRESSURE PUMP (EXCEPT CARRERA "EDITION", CARRERA CABRIOLET "EDITION", CARRERA 4 "EDITION", CARRERA 4 CABRIOLET "EDITION", GT3, GT3 RS) > PRELIMINARY WORK > PRELIMINARY WORK

1. Disconnect the battery.

   → 2X00IN WORK INSTRUCTIONS AFTER DISCONNECTING THE BATTERY

   > *WARNING: Hot fluid*

1. Danger of scalding

→ Let the fluid cool down.

→ Wear personal protective gear.

2. Drain coolant.

→ 193817 DRAINING AND FILLING COOLANT (INCLUDES BLEEDING THE SYSTEM) .

⚠ *CAUTION: Hot components*

1. Risk of burns

→ Let hot components cool down.

→ Wear personal protective gear.

Information

For **sports exhaust system (M-no. 176)** , this can remain in the vehicle.

3. Remove front silencer. → 262519 REMOVING AND INSTALLING FRONT SILENCER

WM 246319 REMOVING AND INSTALLING HIGH-PRESSURE PUMP (EXCEPT CARRERA "EDITION", CARRERA CABRIOLET "EDITION", CARRERA 4 "EDITION", CARRERA 4 CABRIOLET "EDITION", GT3, GT3 RS) > REMOVING HIGH-PRESSURE PUMP > ASSEMBLY OVERVIEW - HIGH-PRESSURE PUMP

Component overview:

Fig 1: Overview Of High-Pressure Pump Components

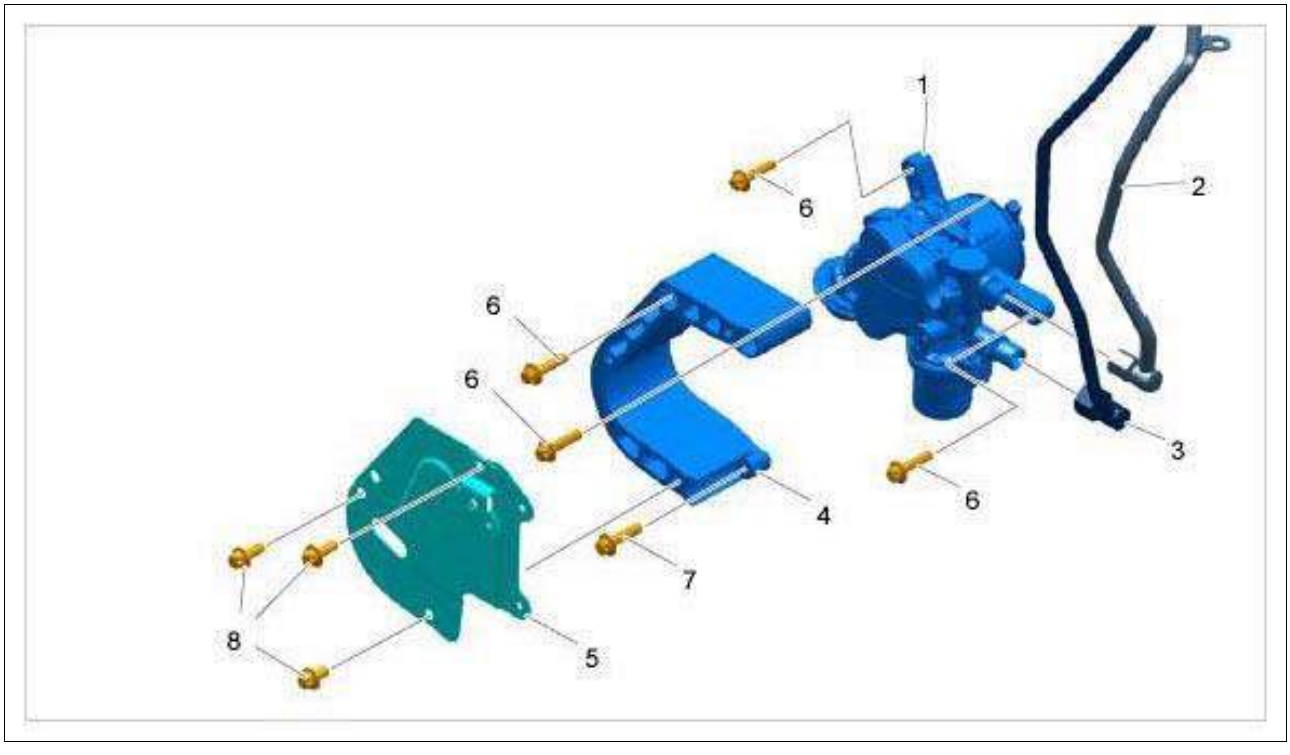

Courtesy of PORSCHE CARS NORTH AMERICA, INC.

1. High-pressure pump
2. High-pressure line
3. Low-pressure line
4. Cover
5. Heat protection
6. External Torx screws (E10), M6 x 25
7. External Torx screw (E10), M6 x 40
8. External Torx screws (E10), M6 x 12

WM 246319 REMOVING AND INSTALLING HIGH-PRESSURE PUMP (EXCEPT CARRERA "EDITION", CARRERA CABRIOLET "EDITION", CARRERA 4 "EDITION", CARRERA 4 CABRIOLET "EDITION", GT3, GT3 RS) > REMOVING HIGH-PRESSURE PUMP > REMOVING HIGH-PRESSURE PUMP

WARNING: Highly inflammable or explosive materials

- *Danger of fire or explosion*

→ Avoid contact with hot parts or sources of ignition.

→ Use suction to remove ignitable vapors.

→ Attach warning sign in a clearly visible position.

Information

Specifications for wrench sizes (a/f specifications) for screw heads are described as follows:

- Torx screws: (E..) for external Torx, (T..) for internal Torx.
- Hexagon-head bolts (internal and external hexagon): Wrench size (a/f)

1. Disconnect coolant pipe **-1-** .

    1. 1.1. Unscrew external Torx screw (E10, M6 x 12) **-2-** on the cover **-3-** for the high-pressure pump.
    2. 1.2. Unscrew external Torx screw (E10, M6 x 12) **-4-** on the coolant regulator housing **-5-** and disconnect coolant pipe **-1-** .
    3. 1.3. Replace O-rings.

Fig 1: Loosening Coolant Pipe

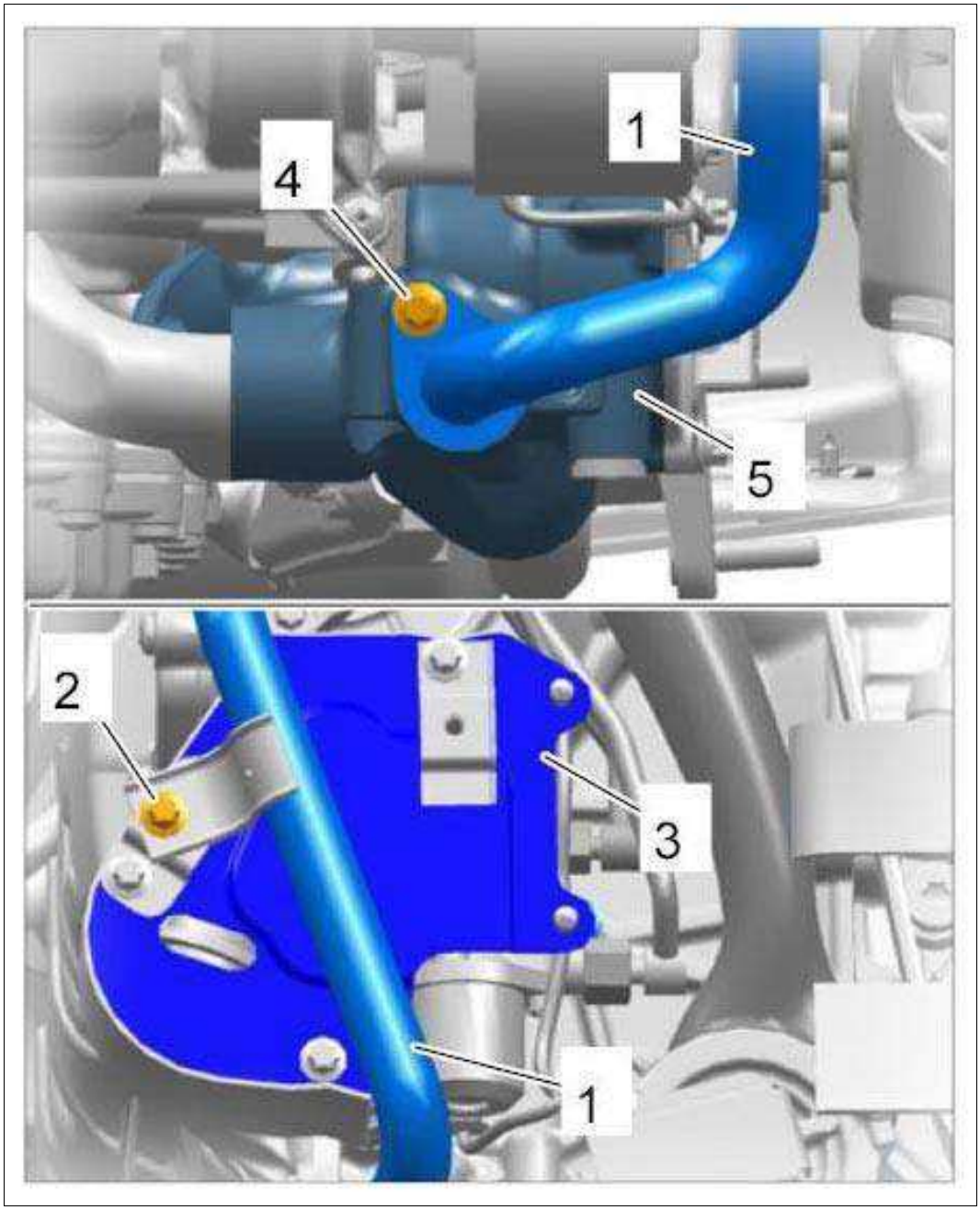

Courtesy of PORSCHE CARS NORTH AMERICA, INC.

2. Remove heat shield **-4-** on the high-pressure pump.

    1. 2.1. Disconnect cable plug for coolant temperature sensor **-1-** .
    2. 2.2. Disconnect cable plug for flow control valve **-2-** and unclip cable **-3-** (**-6-**).
    3. 2.3. Unscrew three external Torx screws (E10, M6 x 12) **-4-** and remove the heat shield **-5-** .

Fig 2: Identifying High-Pressure Pump Heat Shield

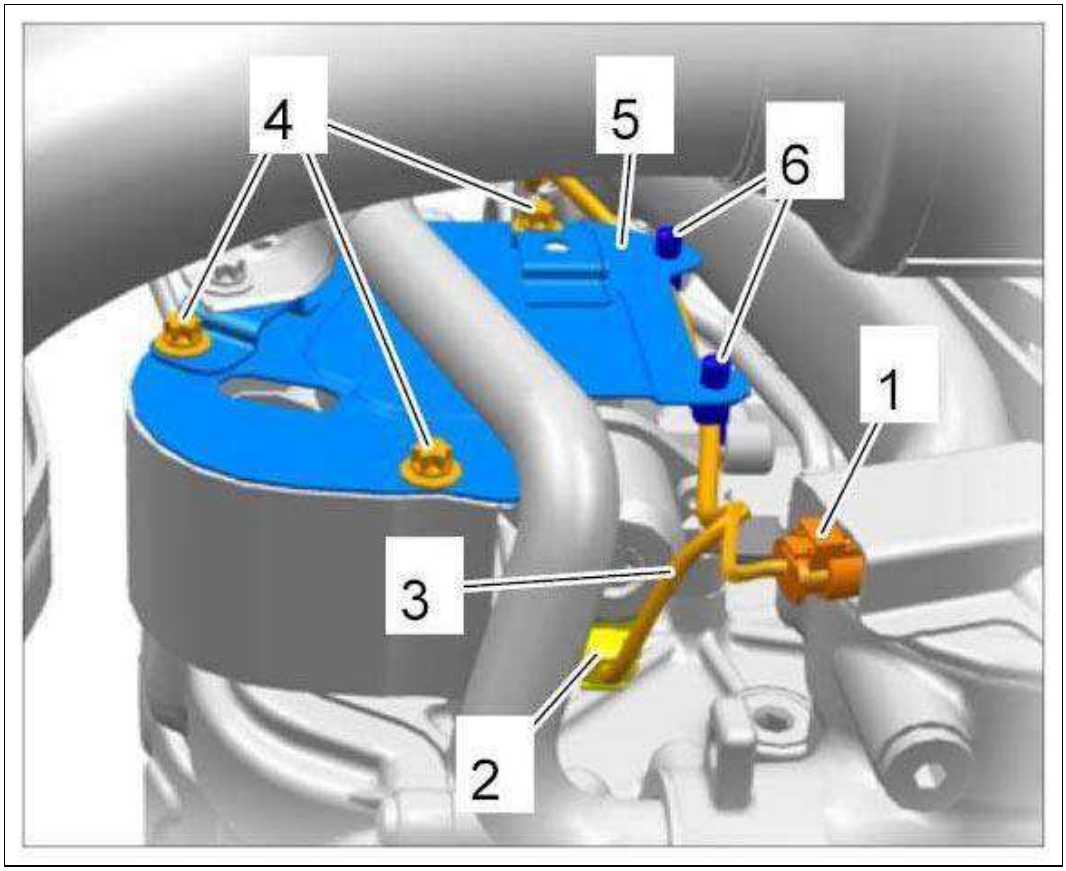

Courtesy of PORSCHE CARS NORTH AMERICA, INC.

3. Remove cover for high-pressure pump **-1-** .

    1. 3.1. Unscrew external Torx screws (E10) M6 x 25 **-2-** and M6 x 40 **-3-** .
    2. 3.2. Guide out cover for high-pressure pump **-1-** .

Fig 3: Identifying High-Pressure Pump With Cover

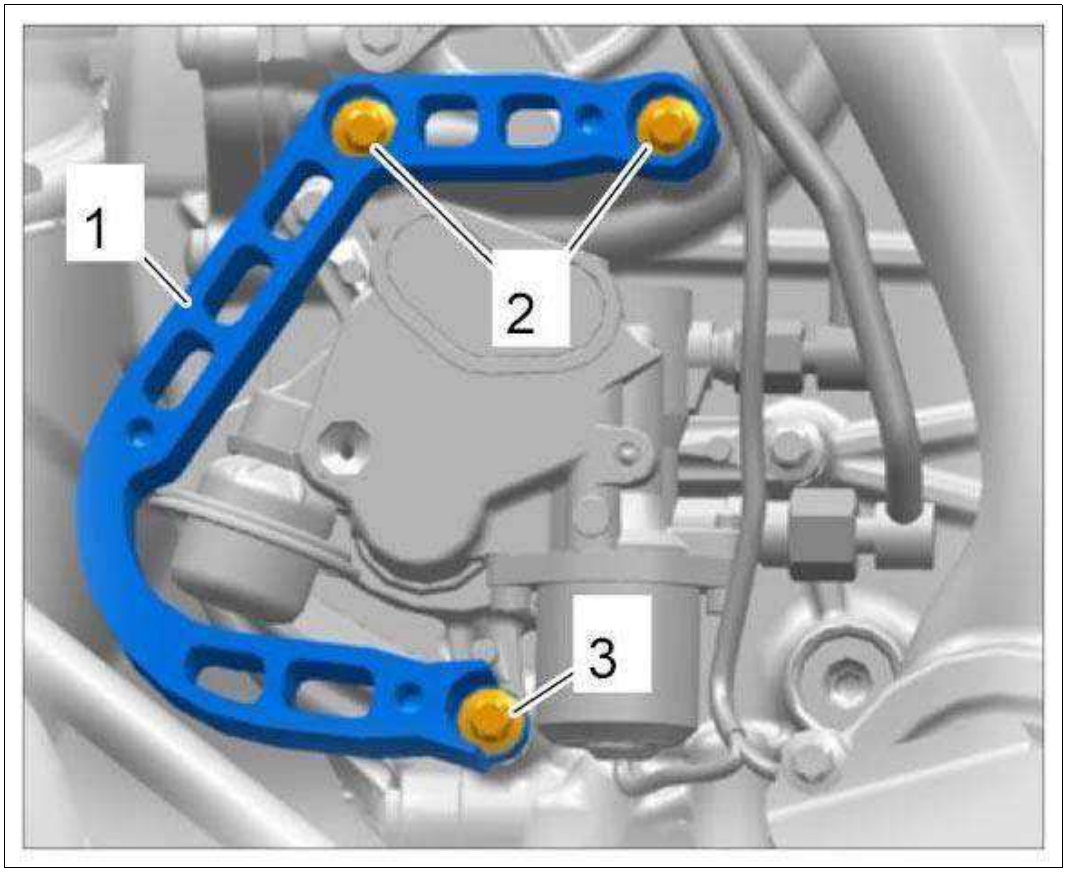

Courtesy of PORSCHE CARS NORTH AMERICA, INC.

Information

1. If the union nuts on the fuel lines at the high-pressure pump cannot be screwed off by hand after loosening them, the relevant line must be replaced.

4. Remove fuel lines for high-pressure pump.

1. 4.1.
2. 4.2. Loosen union nut (a/f 14) **-1-** on fuel high-pressure line **-2-** and unscrew by hand.
3. 4.3. Loosen union nut (a/f 17) **-3-** on fuel low-pressure line **-4-** and unscrew by hand.

Fig 4: Identifying Fuel Lines On High-Pressure Pump

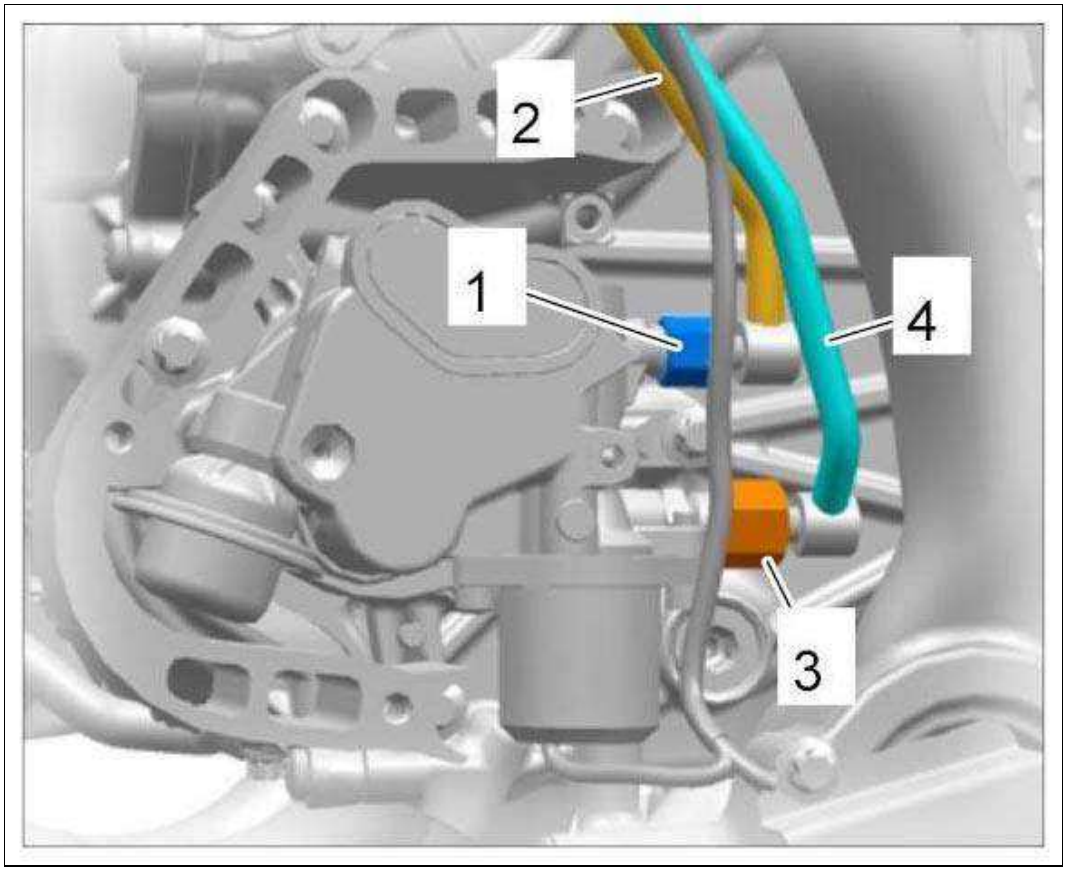

Courtesy of PORSCHE CARS NORTH AMERICA, INC.

5. Remove high-pressure pump.

    1. 5.1. Unscrew external Torx screws (E10, M6 x 25) **-1-** used to secure the high-pressure pump.
    2. 5.2. Pull high-pressure pump out of the fitting bore.
    3. 5.3. Replace O-ring.

Fig 5: Identifying High-Pressure Pump With Cover

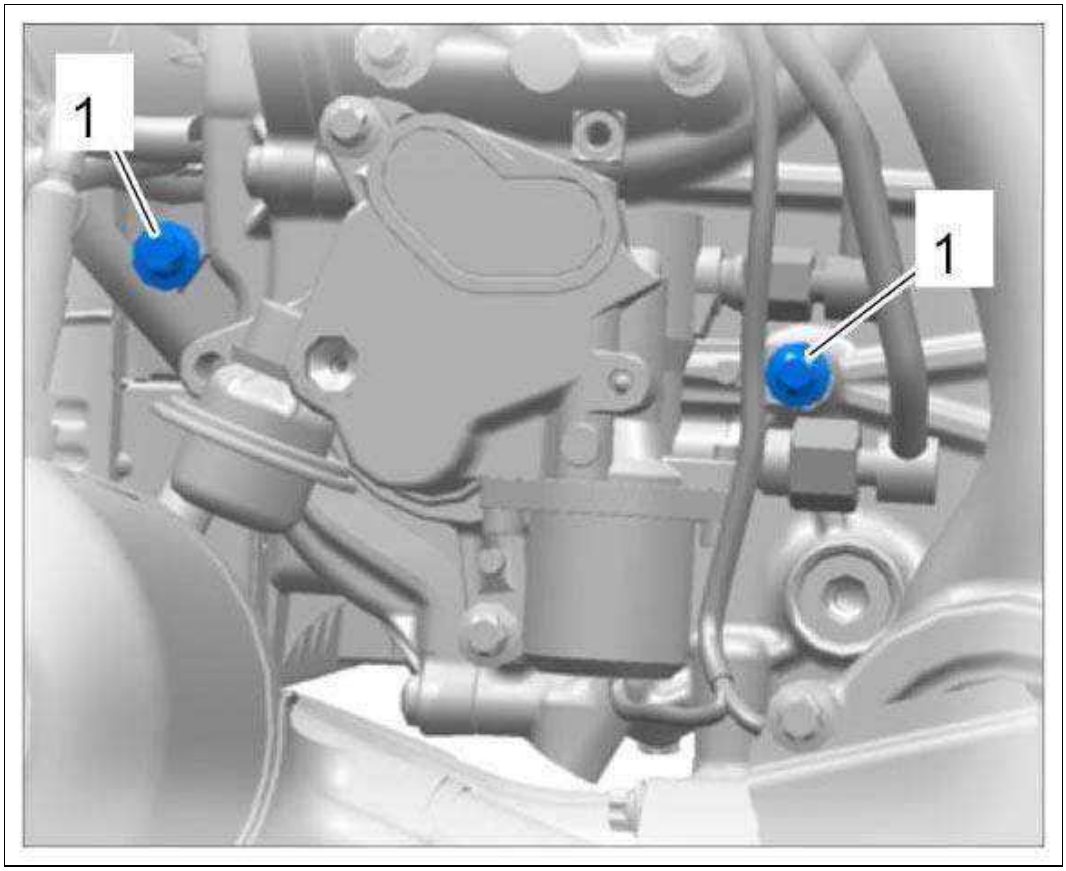

Courtesy of PORSCHE CARS NORTH AMERICA, INC.

6. Mark the position of the high driving journal on the cross-sectional area **-arrow-** with a touch-up stick for refitting the high-pressure pump.

Fig 6: Locating Mark Rotor Position

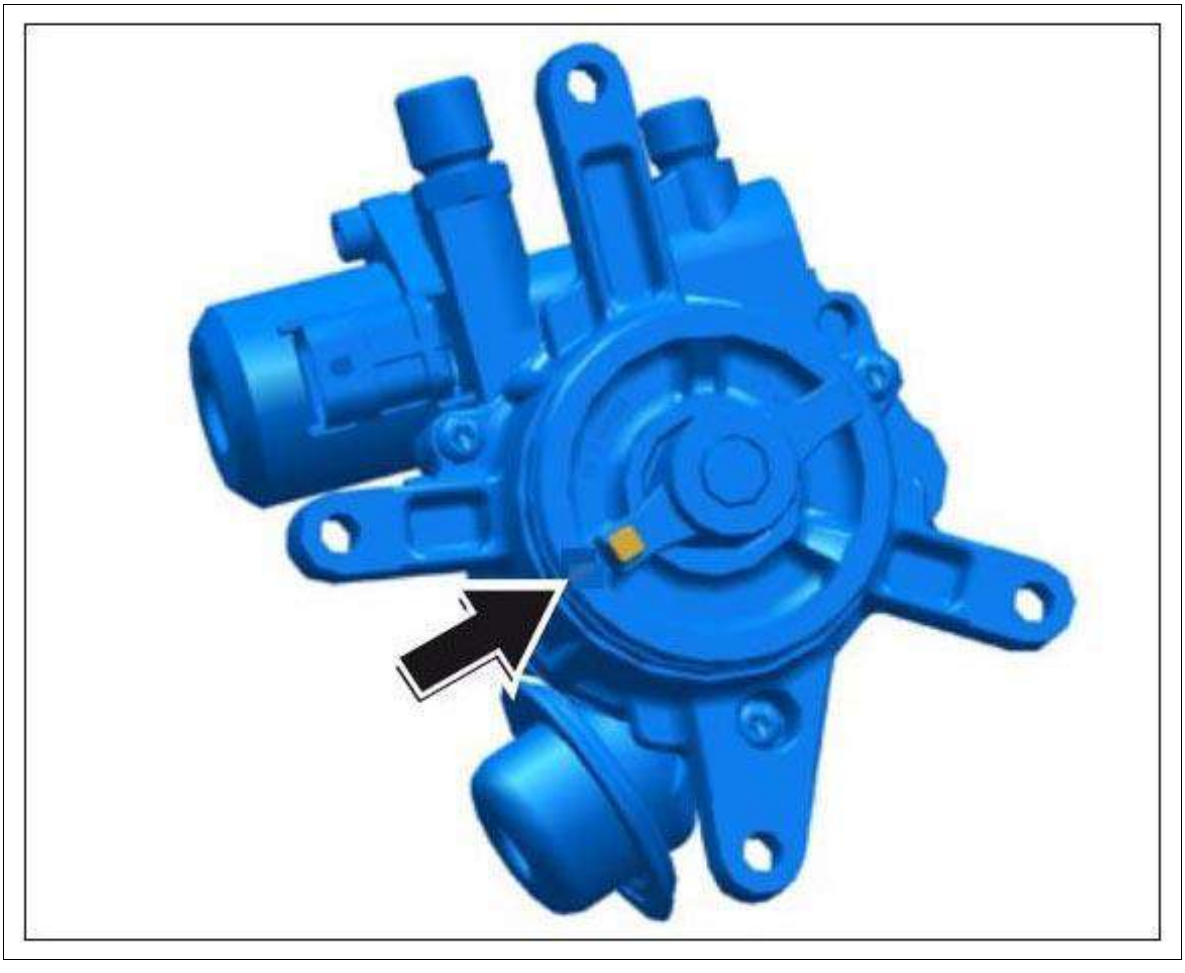

Courtesy of PORSCHE CARS NORTH AMERICA, INC.

WM 246319 REMOVING AND INSTALLING HIGH-PRESSURE PUMP (EXCEPT CARRERA "EDITION", CARRERA CABRIOLET "EDITION", CARRERA 4 "EDITION", CARRERA 4 CABRIOLET "EDITION", GT3, GT3 RS) > INSTALLING HIGH-PRESSURE PUMP

WARNING: Highly inflammable or explosive materials

- *Danger of fire or explosion*

→ Avoid contact with hot parts or sources of ignition.

→ Use suction to remove ignitable vapors.

→ Attach warning sign in a clearly visible position.

1. When refitting the high-pressure pump, install it at its original position **-arrow-** (rotor position as marked during removal).

Fig 1: Locating Mark Rotor Position

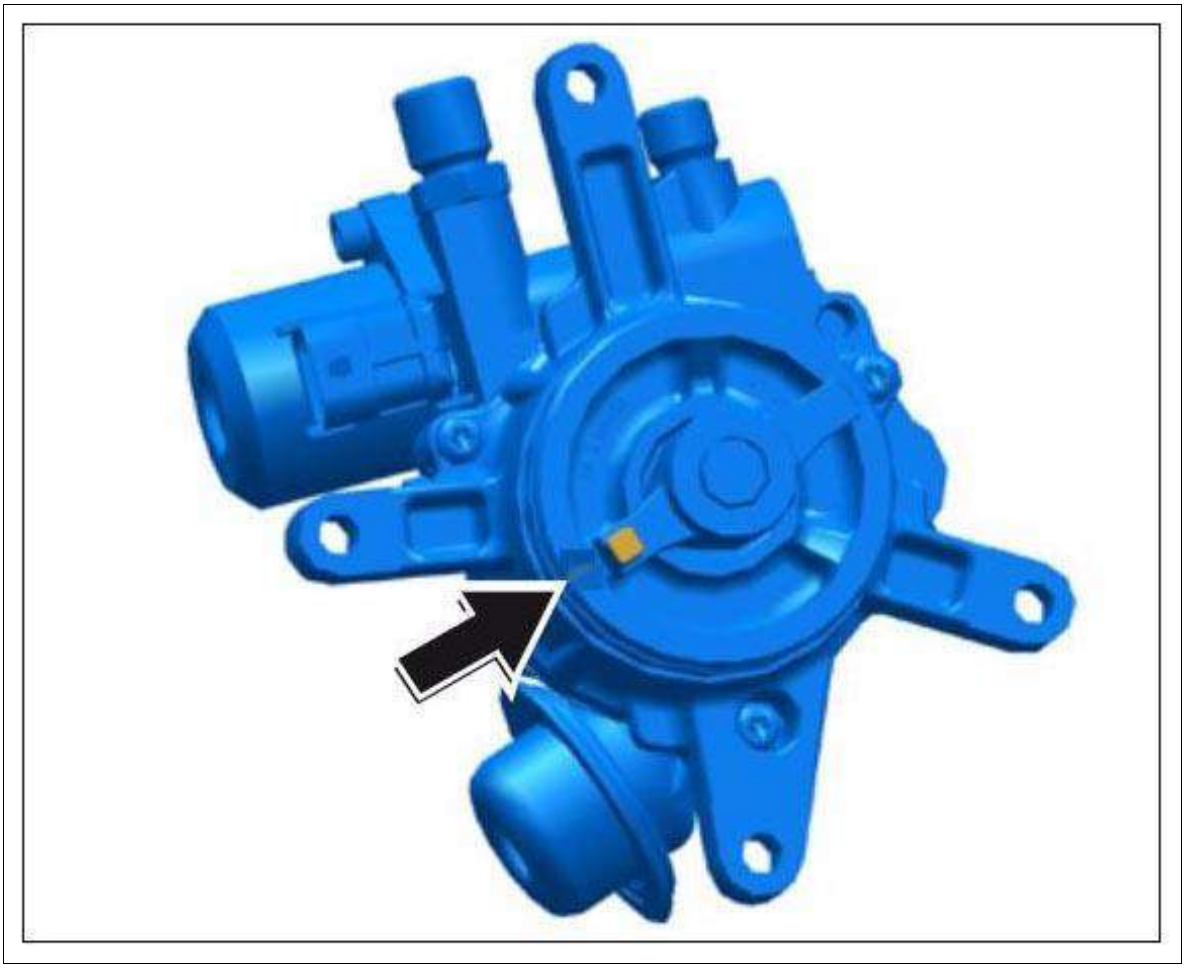

Courtesy of PORSCHE CARS NORTH AMERICA, INC.

Information

Before installing the high-pressure pump, check the position of the driver and move it into installation position by hand if necessary.

2. Position driver for high-pressure pump.

    1. 2.1. Check position of the outlet sprocket.

       It is important that the deep groove is approx. 13.5 mm -arrow-

    2. 2.2. Turn the driver so that the high driving journal is flush with the deeper recess **-arrow-** .

Fig 2: Locating Deep Groove On Outlet Sprocket, Side 1-3

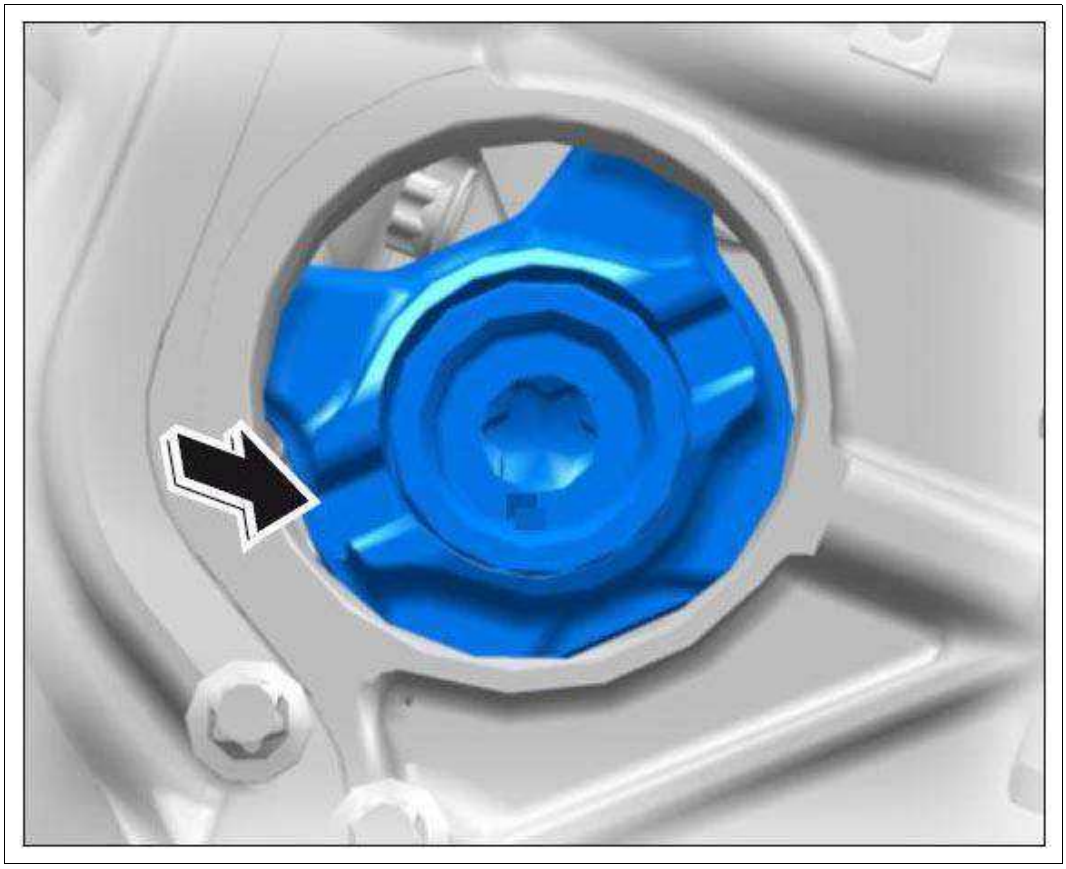

Courtesy of PORSCHE CARS NORTH AMERICA, INC.

Information

Always replace gaskets and O-rings.

1. Grease all gaskets (except for the cooling system) with Kluber Syntheso Glep (Part No. 000.043.204.68).

3. Fit high-pressure pump.

1. 3.1. Replace sealing ring on high-pressure pump and grease with the prescribed lubricant.

2. 3.2. Fit and tighten two external Torx screws (E10, M6 x 25) **-1-** . **Tightening torque 13 Nm (9.5 ftlb.)**

Fig 3: Identifying High-Pressure Pump To Cylinder Head Screws

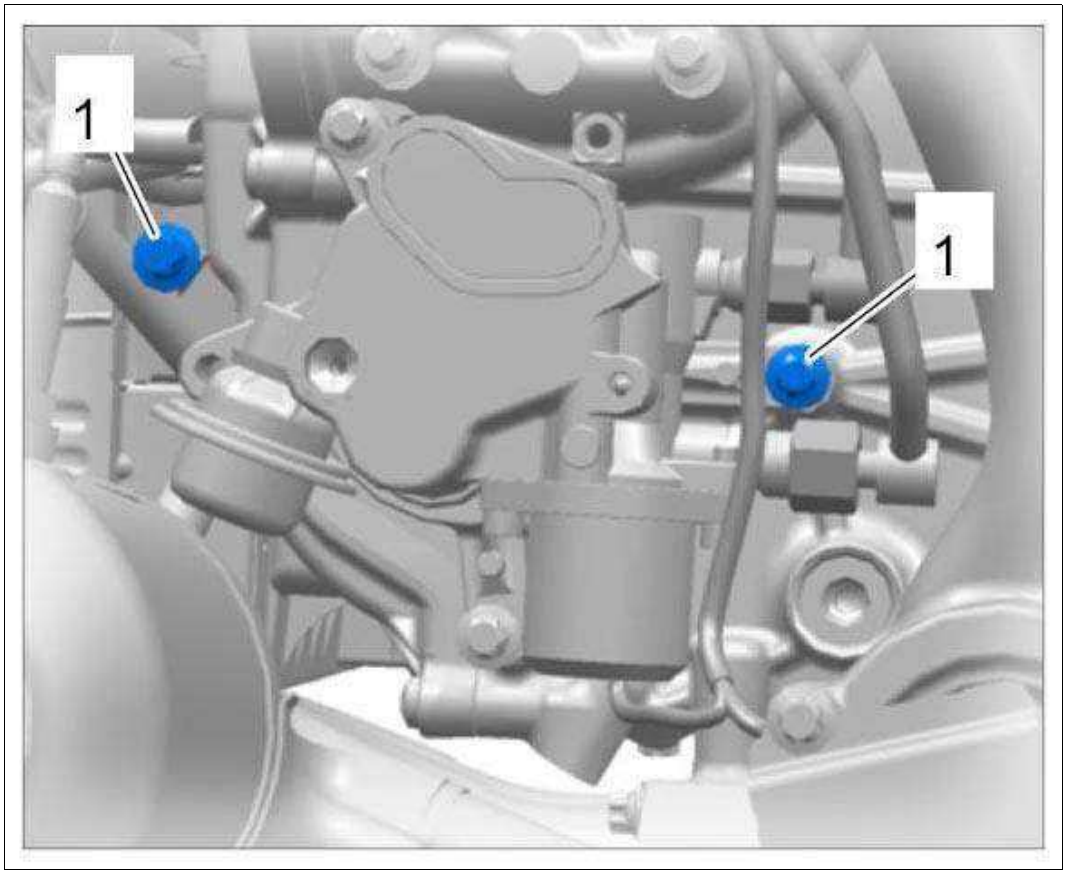

Courtesy of PORSCHE CARS NORTH AMERICA, INC.

4. **Tool set: Position of adapter with joint with respect to torque wrench: 90°**

    1. **Torque wrench with 3/8-inch head**
    2. **Insert adapter with universal joint Nr.98-1 Pos.3**
    3. **Open-jawed wrench insert Nr.95 Pos.1** or **open-jawed wrench insert Nr.95 Pos.2**

Fig 4: Tightening Union Nuts On Fuel Lines Using Tool

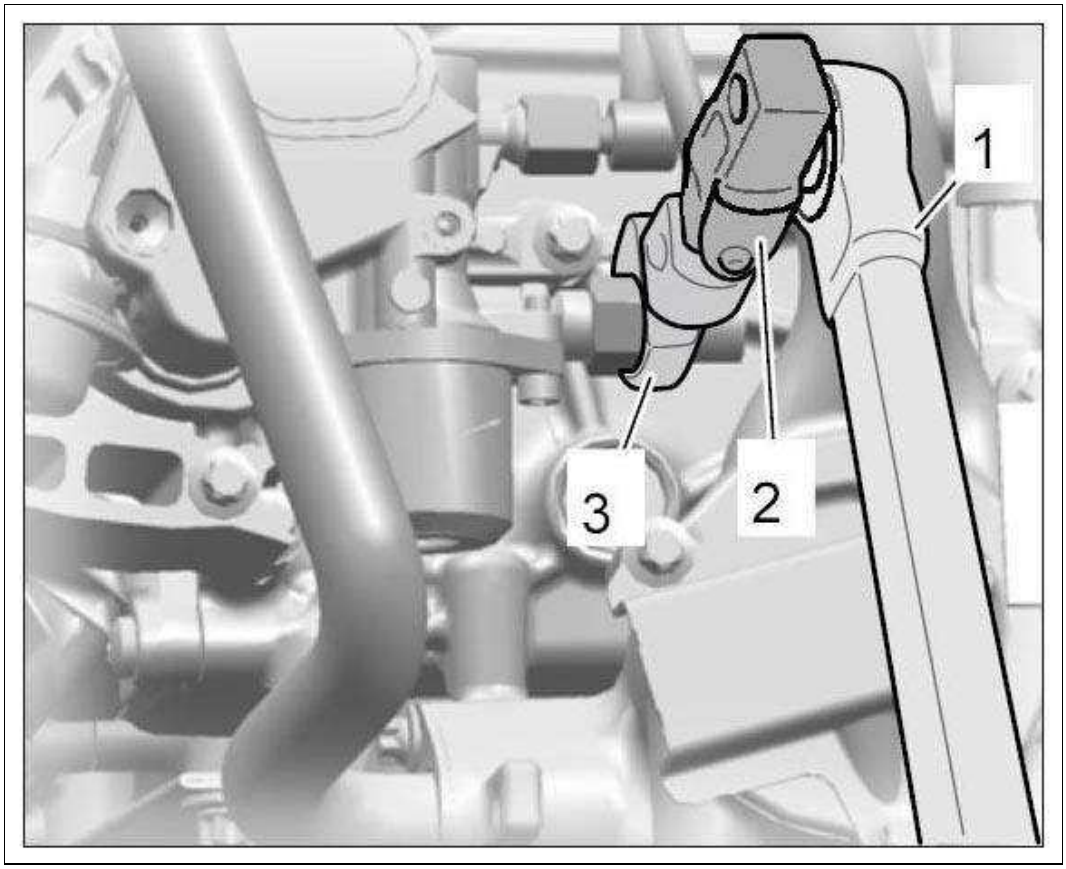

Courtesy of PORSCHE CARS NORTH AMERICA, INC.

Information

1. Always perform a leak test in the high-pressure area after opening the fuel system.
2. This is particularly important if components are disassembled and replaced.
3. The threaded connections of the fuel lines must be coated with OKS 1710 lubricant (Part No. 000.043.303.27) before being screwed back on again.
4. **Always allow a drying time of 60 minutes for the lubricant!**
5. Blow residual fuel out of the lines and high-pressure pump (into a fuel-resistant container or cloth) using compressed air before installation.
6. The tightening specifications must be strictly observed.

5. Fit fuel lines on the high-pressure pump.

    1. 5.1. Coat union nuts on fuel lines, cone and high-pressure pump screw sockets with lubricant OKS 1700.
    2. 5.2. Fit union nut (a/f 14) **-1-** on fuel high-pressure line **-2-** by hand and then tighten it. **Tightening torque 25 Nm (19 ftlb.)**
    3. 5.3. Fit union nut (a/f 17) **-3-** on fuel low-pressure line **-4-** by hand and tighten it. **Tightening torque 25 Nm (19 ftlb.)**

Fig 5: Identifying Fuel Lines On High-Pressure Pump

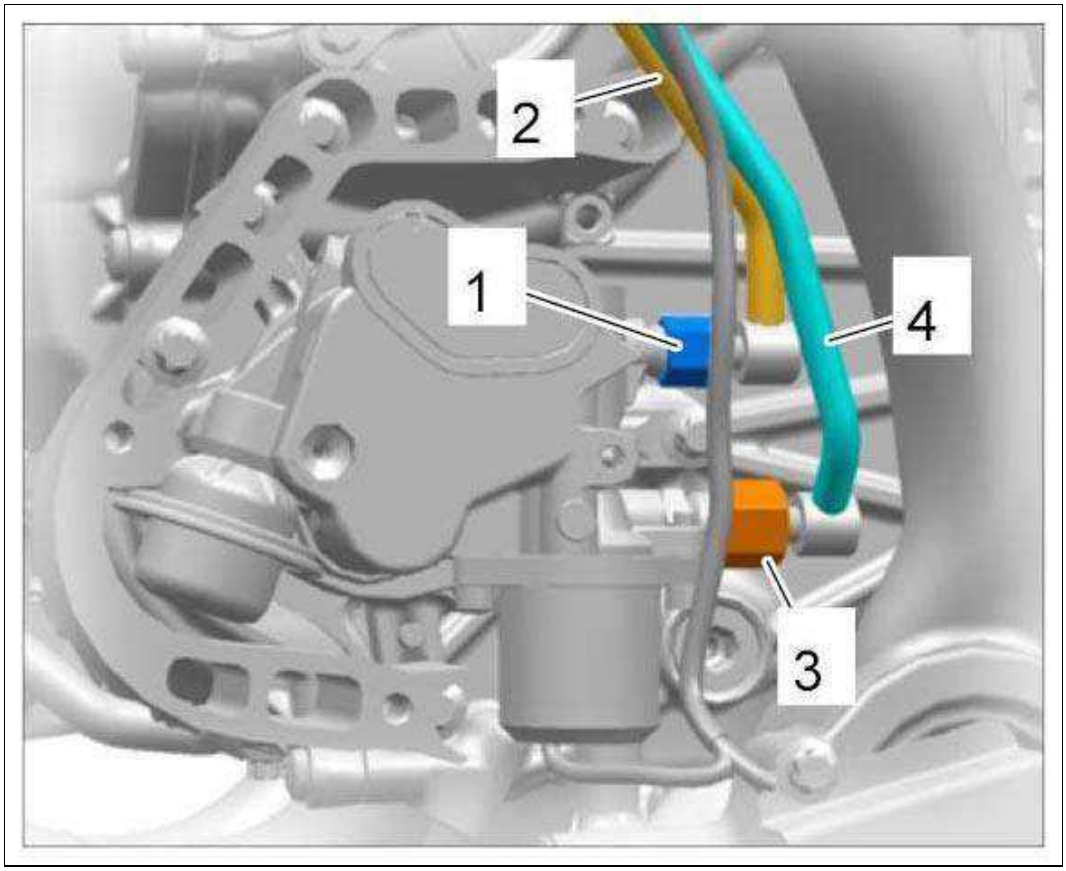

Courtesy of PORSCHE CARS NORTH AMERICA, INC.

> *WARNING: Leaking fuel supply lines*
>
> *1. Emerging fuel*
>
> *2. Risk of fire*

→ Perform leak test.

6. Perform leak test.

   → 200101 CHECKING FUEL SYSTEM (HIGH-PRESSURE SIDE) FOR LEAKS

7. Fit cover **-1-** for high-pressure pump.

   1. 7.1. Fit and tighten external Torx screws (E10, M6 x 25) **-2-** . **Tightening torque 13 Nm (9.5 ftlb.)** .
   2. 7.2. Fit and tighten external Torx screw (M6 x 40) **-3-** . **Tightening torque 13 Nm (9.5 ftlb.)**

Fig 6: Identifying High-Pressure Pump With Cover

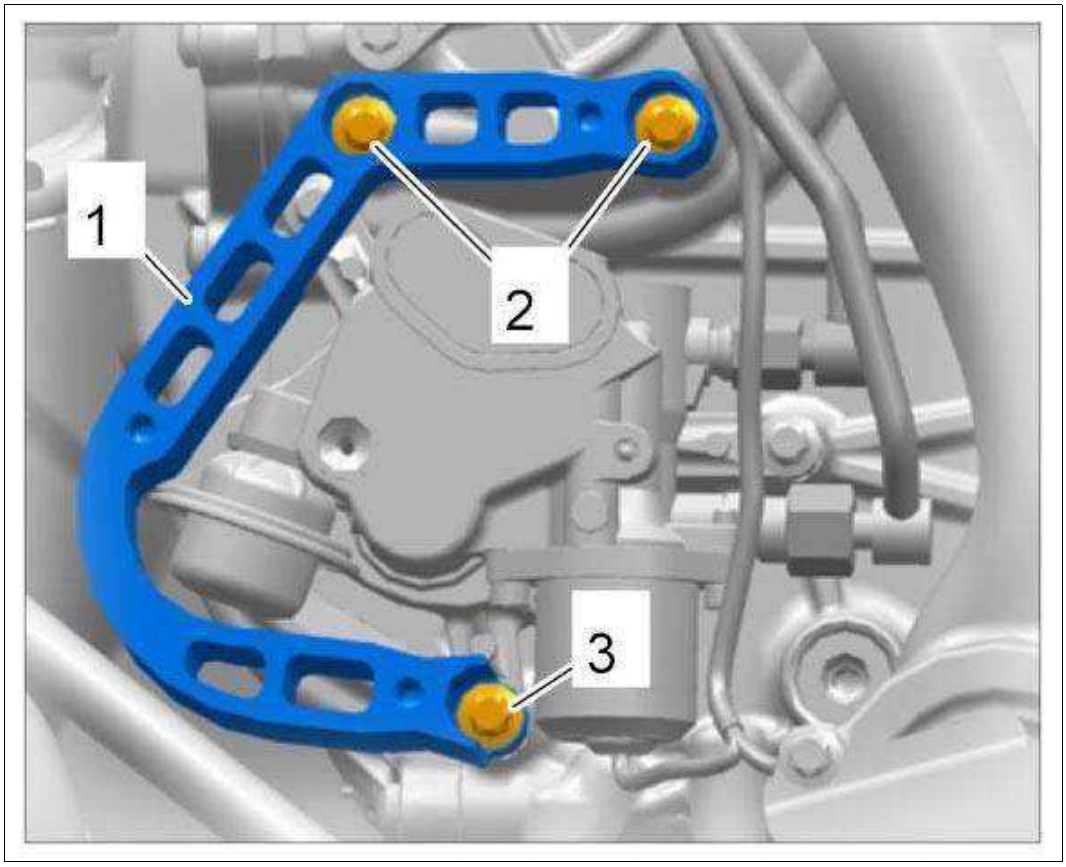

Courtesy of PORSCHE CARS NORTH AMERICA, INC.

8. Fit heat shield for high-pressure pump.

    1. 8.1. Position heat shield **-5-** and screw in and tighten three external Torx screws (E10, M6 x 12) **-4-** . **Tightening torque 13 Nm (9.5 ftlb.)**
    2. 8.2. Connect cable plug for coolant temperature sensor **-1-** .
    3. 8.3. Insert cable plug for flow control valve **-2-** and clip in cable **-3-** (**-6-**).

Fig 7: Identifying High-Pressure Pump Heat Shield

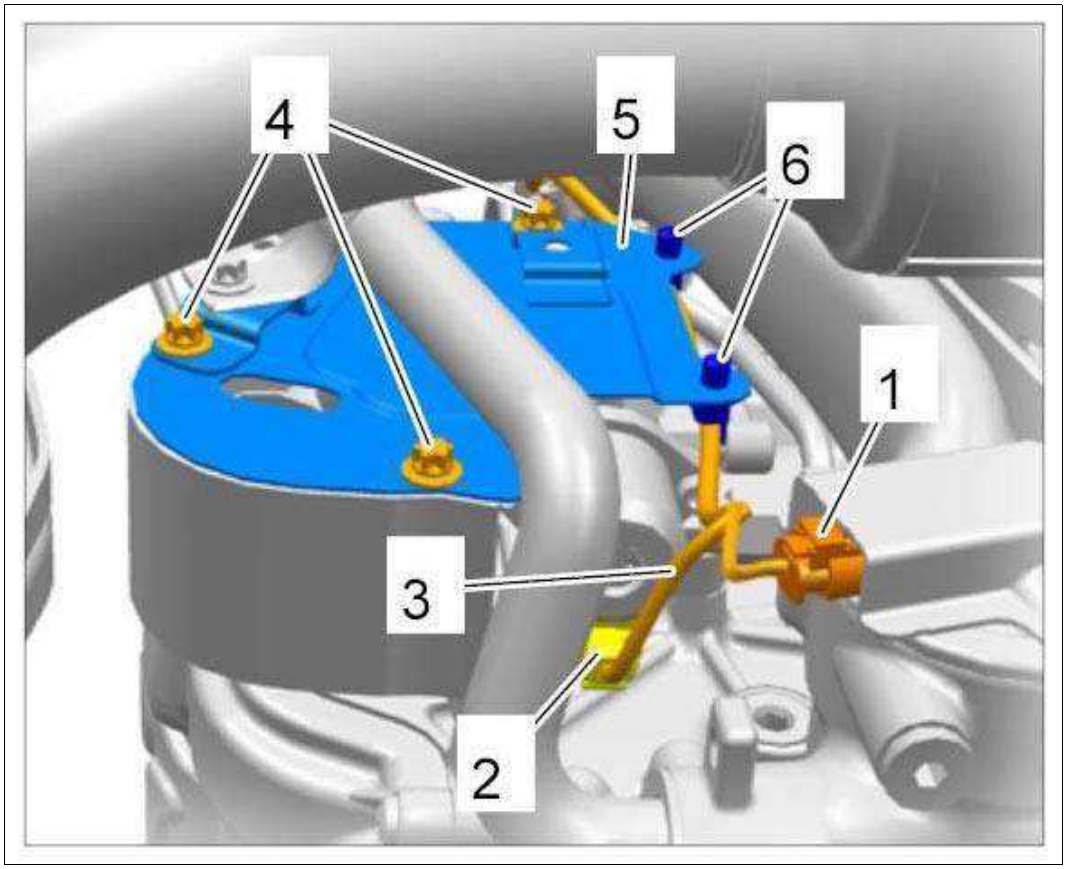

Courtesy of PORSCHE CARS NORTH AMERICA, INC.

Information

Grease O-rings, hoses and lines in the cooling system with Kluberplus Gel (Part No. 000.043.205.93).

9. Secure the coolant pipe **-1-** .

    1. 9.1. Replace sealing rings and grease with the prescribed lubricant.
    2. 9.2. Position coolant pipe and tighten screw **-2-** . **Tightening torque 13 Nm (9.5 ftlb.)**
    3. 9.3. Secure coolant pipe to heat shield **-3-** with a screw **-2-** . **Initial tightening 3 Nm (2 ftlb.)**

Fig 8: Securing Coolant Pipe

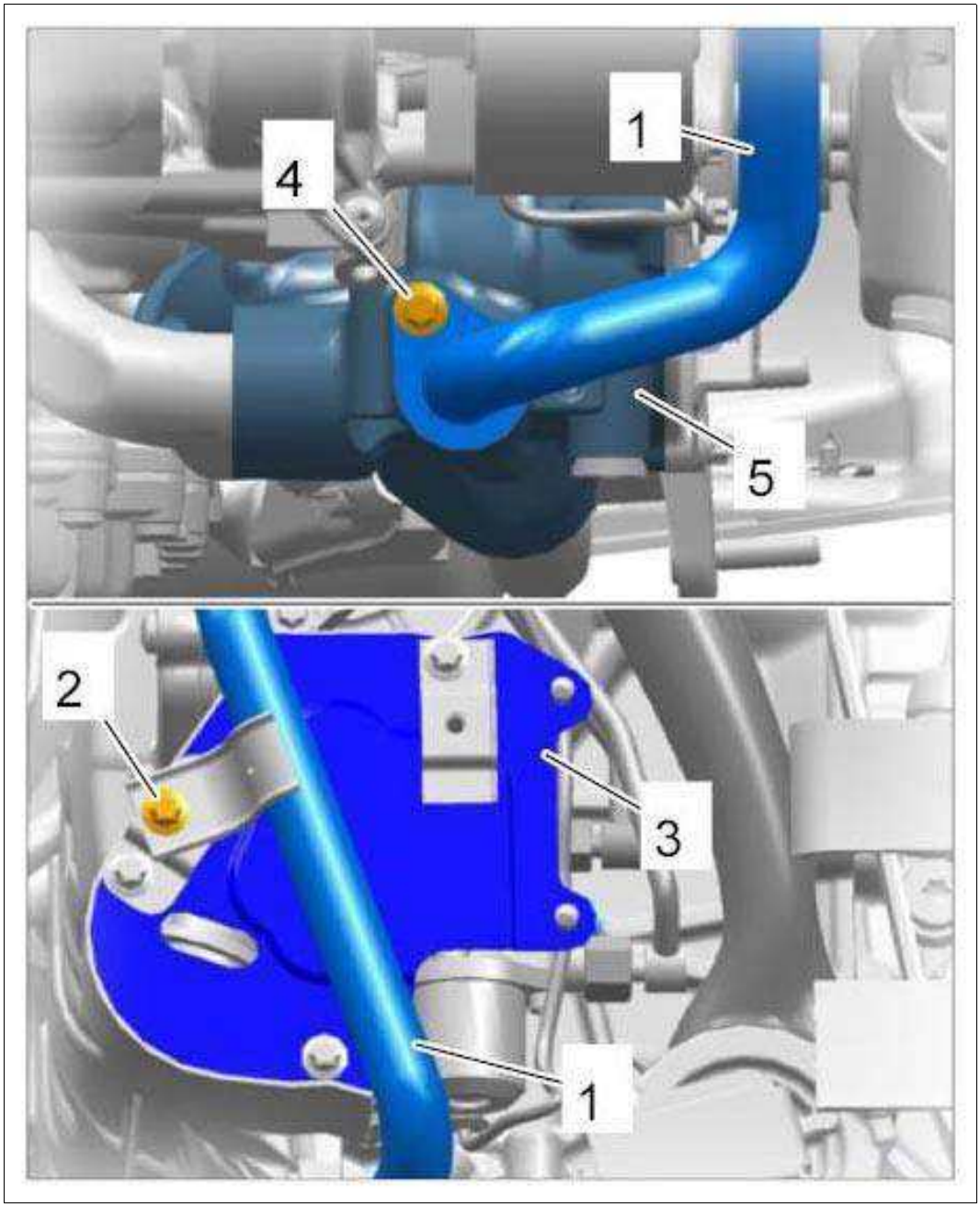

Courtesy of PORSCHE CARS NORTH AMERICA, INC.

WM 246319 REMOVING AND INSTALLING HIGH-PRESSURE PUMP (EXCEPT CARRERA "EDITION", CARRERA CABRIOLET "EDITION", CARRERA 4 "EDITION", CARRERA 4 CABRIOLET "EDITION", GT3, GT3 RS) > SUBSEQUENT WORK

1. Fill in coolant and bleed the cooling system.

   → 193817 DRAINING AND FILLING COOLANT (INCLUDES BLEEDING THE SYSTEM) .

2. Connect the battery.

   → 2X00IN WORK INSTRUCTIONS AFTER DISCONNECTING THE BATTERY

3. Start the system for the first time.

   → 2001IN BLEEDING FUEL SYSTEM HIGH-PRESSURE SIDE (FIRST START FUNCTION) .

4. If the high-pressure pump was replaced, a high-pressure adaptation is required.

   → Installing DME Control Unit .

WM 246319 REMOVING AND INSTALLING HIGH-PRESSURE PUMP (EXCEPT CARRERA "EDITION", CARRERA CABRIOLET "EDITION", CARRERA 4 "EDITION", CARRERA 4 CABRIOLET "EDITION", GT3, GT3 RS) > SUBSEQUENT WORK > SUBSEQUENT WORK

1. Install front silencer. → 262519 REMOVING AND INSTALLING FRONT SILENCER

2. Fill in coolant and bleed the cooling system.

   → 193817 DRAINING AND FILLING COOLANT (INCLUDES BLEEDING THE SYSTEM) .

3. Connect the battery.

   → 2X00IN WORK INSTRUCTIONS AFTER DISCONNECTING THE BATTERY

4. Start the system for the first time.

   → 2001IN BLEEDING FUEL SYSTEM HIGH-PRESSURE SIDE (FIRST START FUNCTION) .

5. If the high-pressure pump was replaced, a high-pressure adaptation is required.

   → Installing DME Control Unit .

WM 246919 REMOVING AND INSTALLING OXYGEN SENSOR UPSTREAM OF CATALYTIC CONVERTER (EXCEPT CARRERA "EDITION", CARRERA CABRIOLET "EDITION", TURBO S, CARRERA 4 "EDITION", TURBO CABRIO, TURBO S CABRIO, CARRERA 4 CABRIOLET "EDITION", GT3, GT3 RS) > TOOLS

Designation	Type	Number	Description
Torque wrench	Commercially available tool	Nr.90 Pos.3	

Open ring wrench	Commercially available tool	Nr.96-3	
Insert adapter with universal joint	Commercially available tool	Nr.98-1 Pos.3	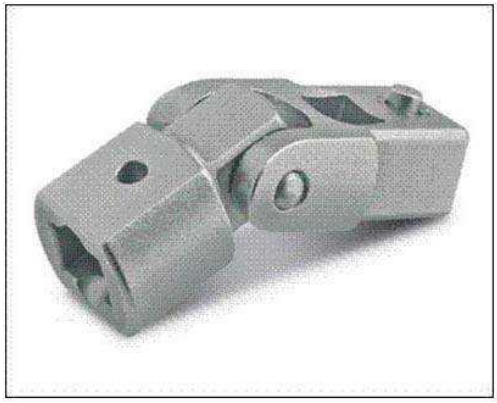

WM 246919 REMOVING AND INSTALLING OXYGEN SENSOR UPSTREAM OF CATALYTIC CONVERTER (EXCEPT CARRERA "EDITION", CARRERA CABRIOLET "EDITION", TURBO S, CARRERA 4 "EDITION", TURBO CABRIO, TURBO S CABRIO, CARRERA 4 CABRIOLET "EDITION", GT3, GT3 RS) > TECHNICAL VALUES

Location	Description	Type	Basic value	Tolerance 1	Tolerance 2
Oxygen sensor cable holder to cylinder head	Cheese head bolt, M6 x 12	Tightening torque	10 Nm (7.5 ftlb.)		
Oxygen sensor to catalytic converter	During re-installation, grease thread using prescribed lubricant	Tightening torque using prescribed tool	39 Nm (29 ftlb.)		

WM 246919 REMOVING AND INSTALLING OXYGEN SENSOR UPSTREAM OF CATALYTIC CONVERTER (EXCEPT CARRERA "EDITION", CARRERA CABRIOLET "EDITION", TURBO S, CARRERA 4 "EDITION", TURBO CABRIO, TURBO S CABRIO, CARRERA 4 CABRIOLET "EDITION", GT3, GT3 RS) > PRELIMINARY WORK

1. Remove rear spoiler.

   → 665819 REMOVING AND INSTALLING REAR SPOILER .

2. Remove tail lights.

   → 943119 REMOVING AND INSTALLING TAIL LIGHTS .

3. Remove air cleaner housing.

   → 242519 REMOVING AND INSTALLING AIR CLEANER HOUSING .

WM 246919 REMOVING AND INSTALLING OXYGEN SENSOR UPSTREAM OF CATALYTIC CONVERTER (EXCEPT CARRERA "EDITION", CARRERA CABRIOLET "EDITION", TURBO S, CARRERA 4 "EDITION", TURBO CABRIO, TURBO S CABRIO, CARRERA 4 CABRIOLET "EDITION", GT3, GT3 RS) > REMOVING OXYGEN SENSOR UPSTREAM OF CATALYTIC CONVERTER

⚠ *CAUTION: Hot components*

- *Risk of burns*

→ Let hot components cool down.

→ Wear personal protective gear.

NOTE: Incorrect handling of oxygen sensors

- *Damage to oxygen sensors*
- *Different exhaust emission behavior*

→ Do not remove the plastic cap on the thread until just prior to fitting.

→ Protect oxygen sensors from impact of any kind.

→ Do not kink or twist the cables when screwing in the sensors.

→ Do not re-use dirty or damaged components.

Installation overview, cylinder bank 1-3:

Fig 1: Overview Of Cylinder Bank 1-3

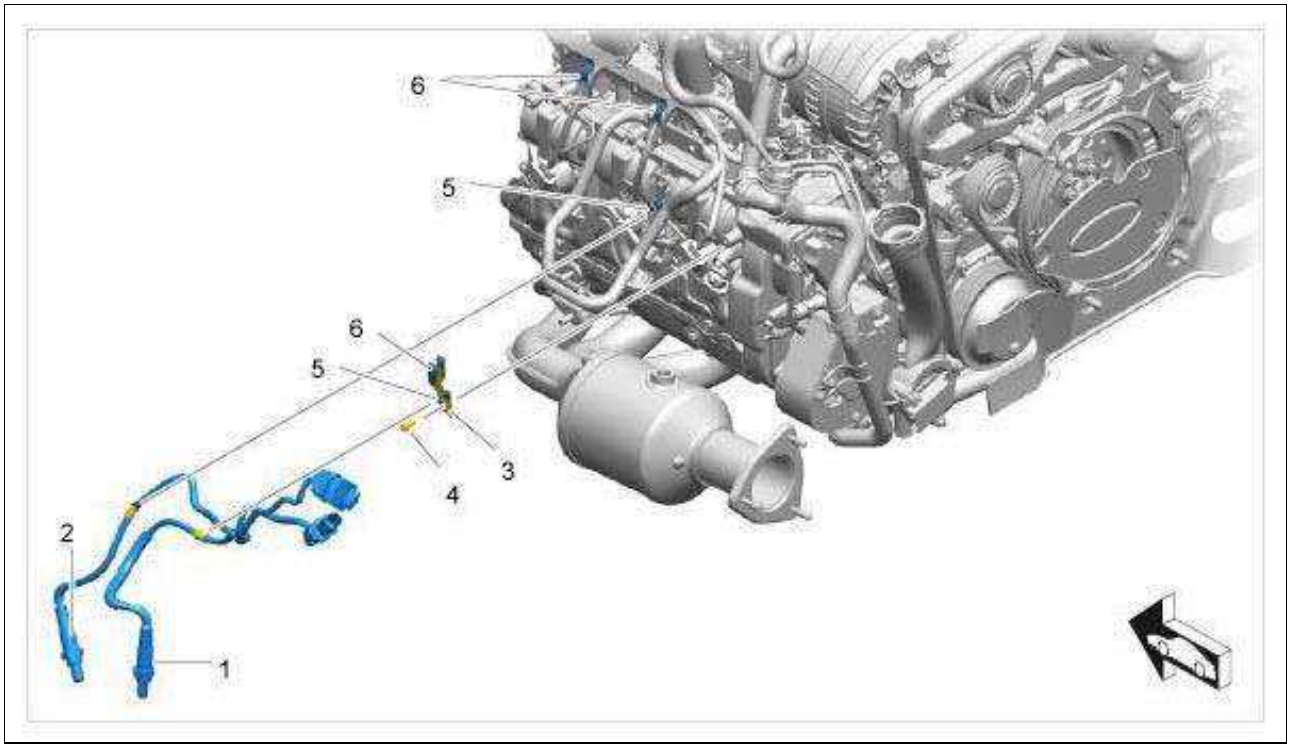

Courtesy of PORSCHE CARS NORTH AMERICA, INC.

1. Oxygen sensor downstream of catalytic converter
2. Oxygen sensor upstream of catalytic converter
3. Holder
4. Fastening screw **Tightening torque 10 Nm (7.5 ftlb.)**
5. Small retaining clip
6. Large retaining clip

Installation overview, cylinder bank 4-6:

Fig 2: Overview Of Cylinder Bank 4-6

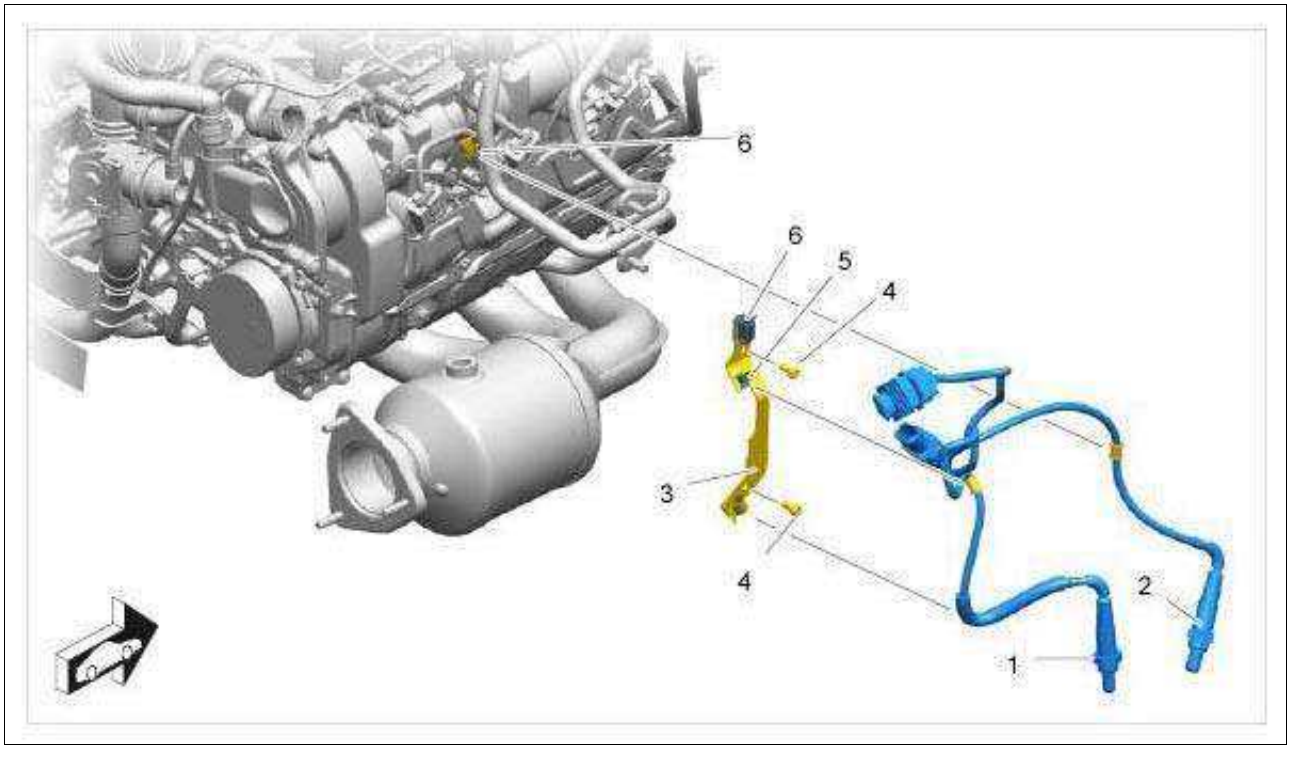

Courtesy of PORSCHE CARS NORTH AMERICA, INC.

1. Oxygen sensor downstream of catalytic converter
2. Oxygen sensor upstream of catalytic converter
3. Holder
4. Fastening screw **Tightening torque 10 Nm (7.5 ftlb.)**
5. Small retaining clip
6. Large retaining clip

1. Open oxygen sensor connectors in engine compartment.

   The sensor connectors and cables are of different colors.

Sensor	Cable color	Connector
SU broadband oxygen sensor upstream of catalytic converter	Green	Black
LSF narrow-band oxygen sensor downstream of catalytic converter	Grey	Grey

   1. 1.1. Pull plug connection **-1-** out of the holder **-2-** (**-arrow-**). Release connector and pull it off.
   2. 1.2. Unclip oxygen sensor electric cable from the mounting points and move it clear.

Fig 3: Pulling Oxygen Sensor Upstream Plug Connection Of Catalytic Converter In Engine Compartment

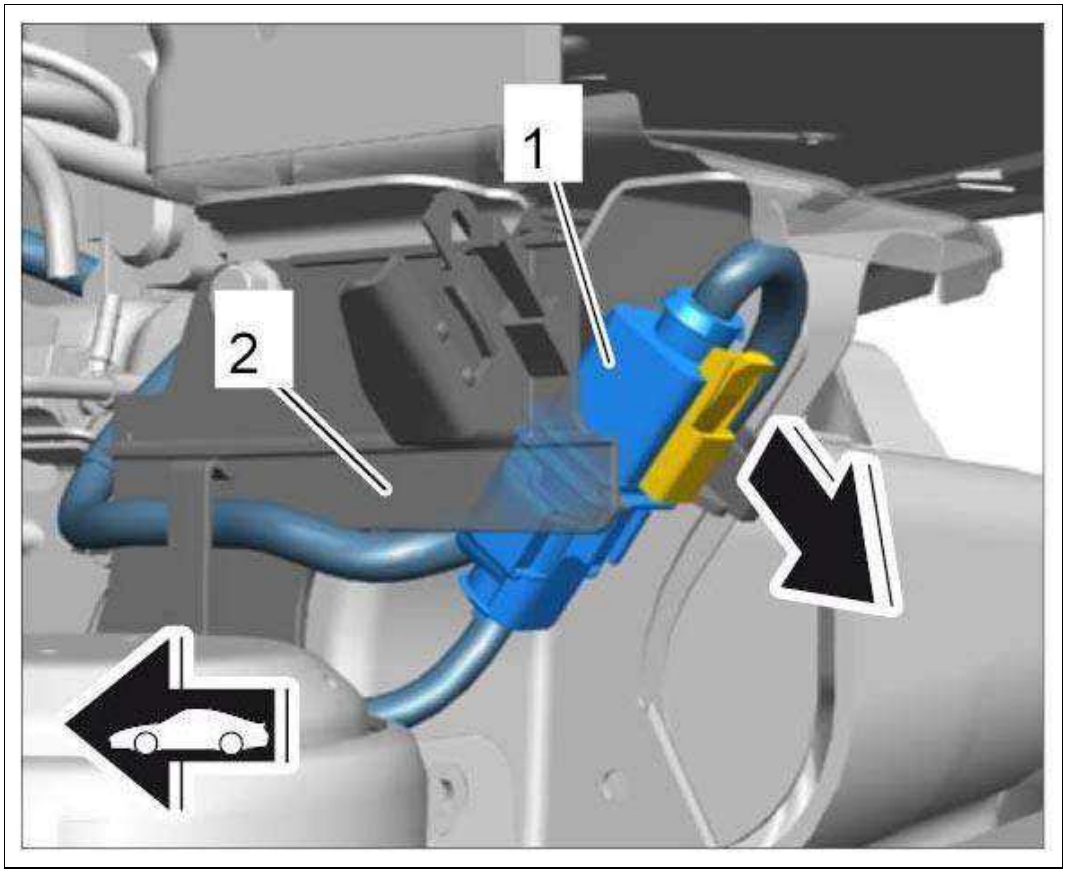

Courtesy of PORSCHE CARS NORTH AMERICA, INC.

2. Unclip oxygen sensor electric cable (green) from the mounting points.

3. **Tools for removing and installing oxygen sensors:**

    1. **Torque wrench Nr.90 Pos.3** - suitable for 3/8 inch heads

    2. **Insert adapter with joint Nr.98-1 Pos.3**

    3. **Open ring wrench Nr.96-3** , width across flats 22 mm

Fig 4: Identifying Oxygen Sensors Tools

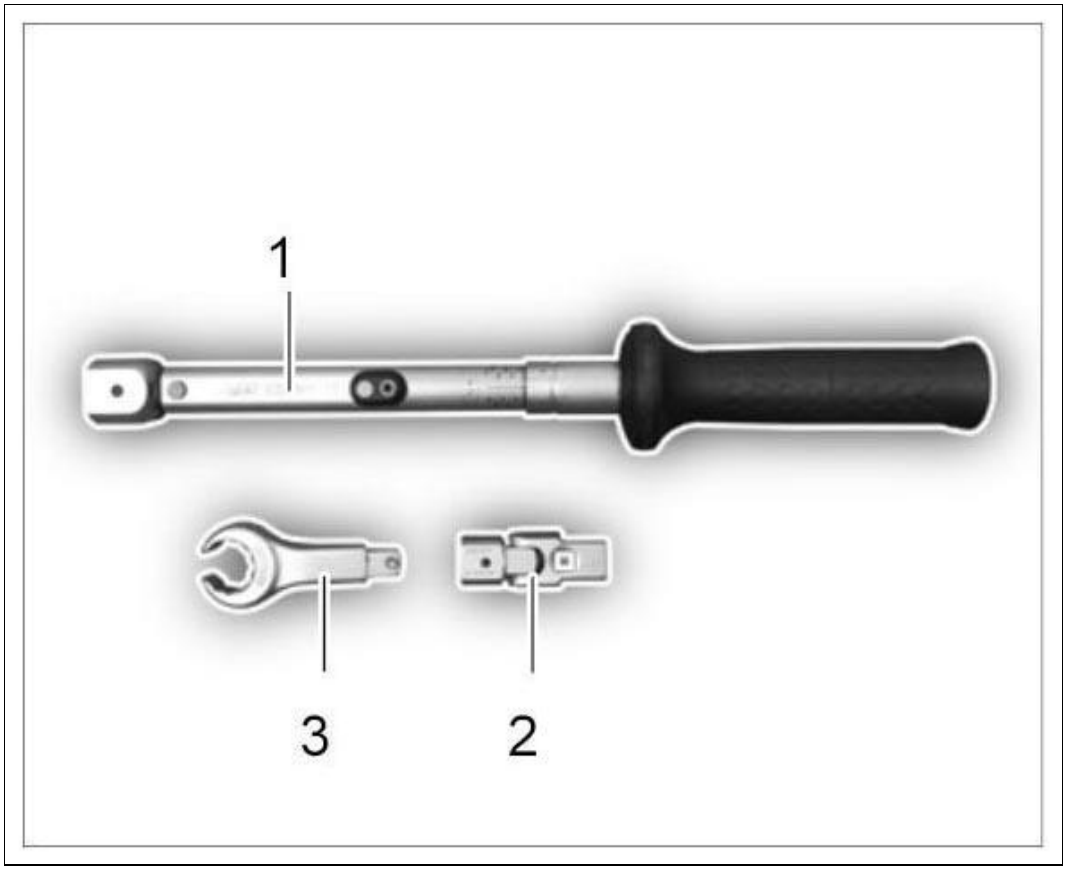

Courtesy of PORSCHE CARS NORTH AMERICA, INC.

4. Loosen oxygen sensor using the prescribed tool.

    1. 4.1. Unscrew oxygen sensor.

Fig 5: Tightening Oxygen Sensor Upstream Of Catalytic Converter (Cylinder Bank 1-3)

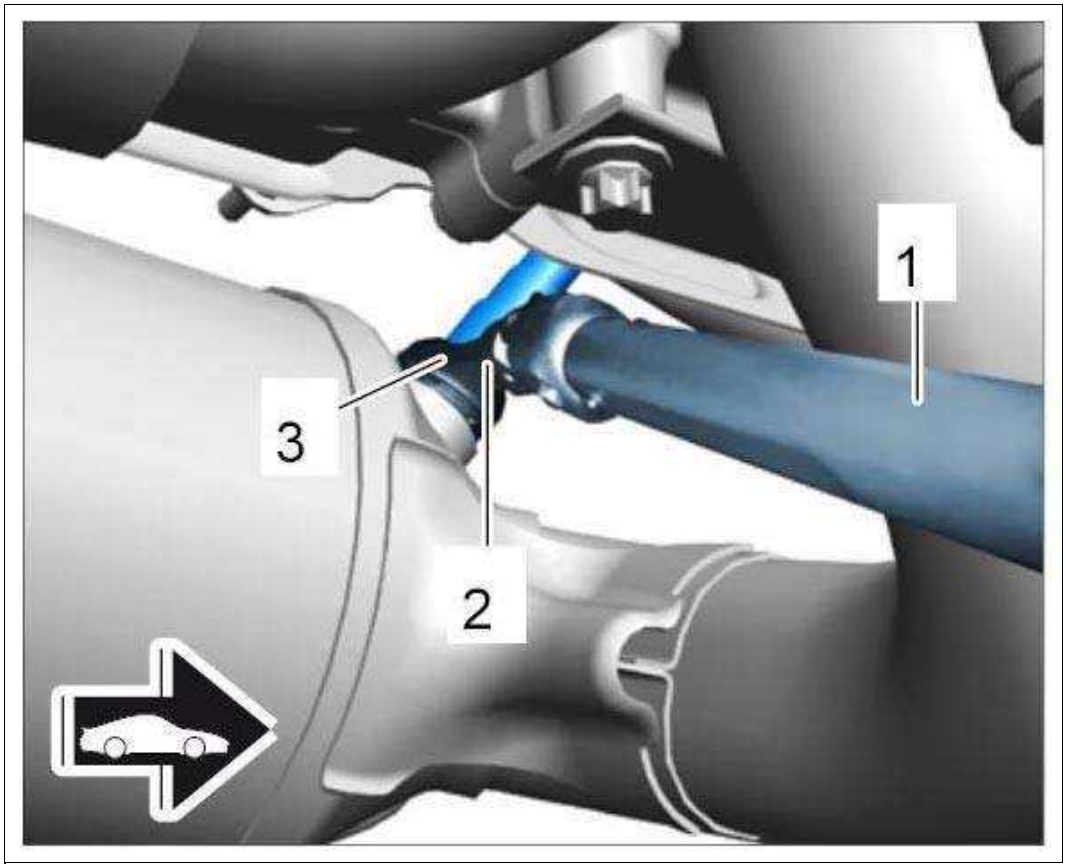

Courtesy of PORSCHE CARS NORTH AMERICA, INC.

WM 246919 REMOVING AND INSTALLING OXYGEN SENSOR UPSTREAM OF CATALYTIC CONVERTER (EXCEPT CARRERA "EDITION", CARRERA CABRIOLET "EDITION", TURBO S, CARRERA 4 "EDITION", TURBO CABRIO, TURBO S CABRIO, CARRERA 4 CABRIOLET "EDITION", GT3, GT3 RS) > INSTALLING OXYGEN SENSOR UPSTREAM OF CATALYTIC CONVERTER

Information

- When reinstalling oxygen sensors, grease the thread with the Optimol Paste MF lubricant (Part No. 000.043.207.07) only.
- New oxygen sensors have already been greased and the thread is fitted with a protection cap.

1. During re-installation of the oxygen sensor, the thread must be coated with the prescribed lubricant.

1. 1.1. **New oxygen sensors are pre-greased for installation.**

NOTE: Incorrect handling of oxygen sensors

1. Damage to oxygen sensors

2. Different exhaust emission behavior

→ Do not remove the plastic cap on the thread until just prior to fitting.

→ Protect oxygen sensors from impact of any kind.

→ Do not kink or twist the cables when screwing in the sensors.

→ Do not re-use dirty or damaged components.

2. Screw in oxygen sensor by hand.
    1. 2.1. **Use the same tools as prescribed for removal.**
    2. 2.2. Tighten oxygen sensor according to tightening specifications.

       Tightening torque using prescribed tool 39 Nm (29 ftlb.)
3. Route oxygen sensor cable and clip it in at the defined mounting points.
4. Route oxygen sensor cable in engine compartment and clip into the holder.
    1. 4.1. Close plug connection and insert into the holder.

WM 246919 REMOVING AND INSTALLING OXYGEN SENSOR UPSTREAM OF CATALYTIC CONVERTER (EXCEPT CARRERA "EDITION", CARRERA CABRIOLET "EDITION", TURBO S, CARRERA 4 "EDITION", TURBO CABRIO, TURBO S CABRIO, CARRERA 4 CABRIOLET "EDITION", GT3, GT3 RS) > SUBSEQUENT WORK

1. Install air cleaner housing.

   → Installing Air Cleaner Housing .
2. Install tail lights.

   → Installing Tail Light .
3. Install rear spoiler

   → Installing Rear Spoiler .

WM 247019 REMOVING AND INSTALLING DME CONTROL UNIT (EXCEPT CARRERA "EDITION", CARRERA CABRIOLET "EDITION", CARRERA 4 "EDITION", TARGA 4, TARGA 4S, TARGA 4 GTS, CARR. 4 CABRIO, CARR. 4S CABRIO, TURBO CABRIO, CARR. 4 GTS CABRIO, TURBO S CABRIO, CARRERA 4 CABRIOLET "EDITION") > TOOLS

Designation	Type	Number	Description

PIWIS Tester II	Special tool	9818

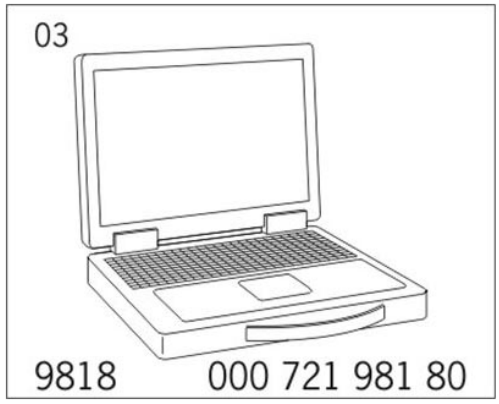

WM 247019 REMOVING AND INSTALLING DME CONTROL UNIT (EXCEPT CARRERA "EDITION", CARRERA CABRIOLET "EDITION", CARRERA 4 "EDITION", TARGA 4, TARGA 4S, TARGA 4 GTS, CARR. 4 CABRIO, CARR. 4S CABRIO, TURBO CABRIO, CARR. 4 GTS CABRIO, TURBO S CABRIO, CARRERA 4 CABRIOLET "EDITION") > TECHNICAL VALUES

Location	Description	Type	Basic value	Tolerance 1	Tolerance 2
DME control unit holder to body	M6 collar nut	Tightening torque	9 Nm (6.5 ftlb.)		

WM 247019 REMOVING AND INSTALLING DME CONTROL UNIT (EXCEPT CARRERA "EDITION", CARRERA CABRIOLET "EDITION", CARRERA 4 "EDITION", TARGA 4, TARGA 4S, TARGA 4 GTS, CARR. 4 CABRIO, CARR. 4S CABRIO, TURBO CABRIO, CARR. 4 GTS CABRIO, TURBO S CABRIO, CARRERA 4 CABRIOLET "EDITION") > PRELIMINARY WORK > PRELIMINARY WORK FOR REMOVING AND INSTALLING DME CONTROL UNIT

If you are replacing the DME control unit, the values and coding must be read out using **PIWIS Tester II 9818** before removing the faulty DME control unit. → 247055 REPLACING DME CONTROL UNIT

GT3 vehicles

1. Remove cross member with lower part of rear lid lock. → 558619 REMOVING AND INSTALLING LOWER PART OF REAR LID LOCK

   All vehicles (except GT3)

2. Remove rear spoiler. → 665819 REMOVING AND INSTALLING REAR SPOILER

WM 247019 REMOVING AND INSTALLING DME CONTROL UNIT (EXCEPT CARRERA "EDITION", CARRERA CABRIOLET "EDITION", CARRERA 4 "EDITION", TARGA 4, TARGA 4S, TARGA 4 GTS, CARR. 4 CABRIO, CARR. 4S CABRIO, TURBO CABRIO, CARR. 4 GTS CABRIO, TURBO S CABRIO, CARRERA 4 CABRIOLET "EDITION") > REMOVING DME CONTROL UNIT

NOTE: Voltage peaks

- *Risk of damage to load or to the control unit*

→ Remove the ignition key and switch off load before disconnecting or removing load.

Information

Always comply with the regulations for handling ESD-sensitive components!

- Assembly work may only be carried out if the mechanic is wearing the working clothes and shoes approved by Porsche.
- The new part must only be removed from the ESD (electrostatic discharge) protective packaging just before installation and at the position at which the part is to be installed.
- Never touch the electric pins and plug contacts.

Fig 1: Identifying DME Control Unit Installation Position

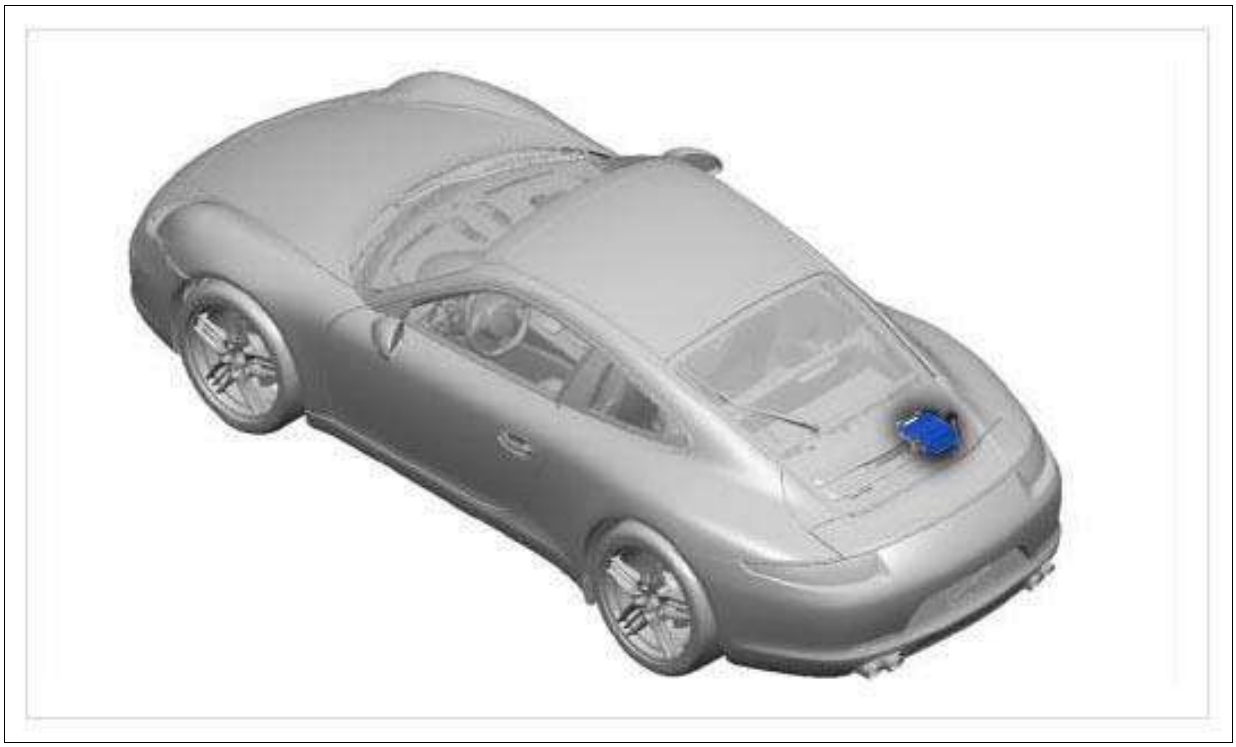

Courtesy of PORSCHE CARS NORTH AMERICA, INC.

1. Release plug connections **-a-** and pull them off **-arrows-** .

Fig 2: Disconnecting Plug Connections

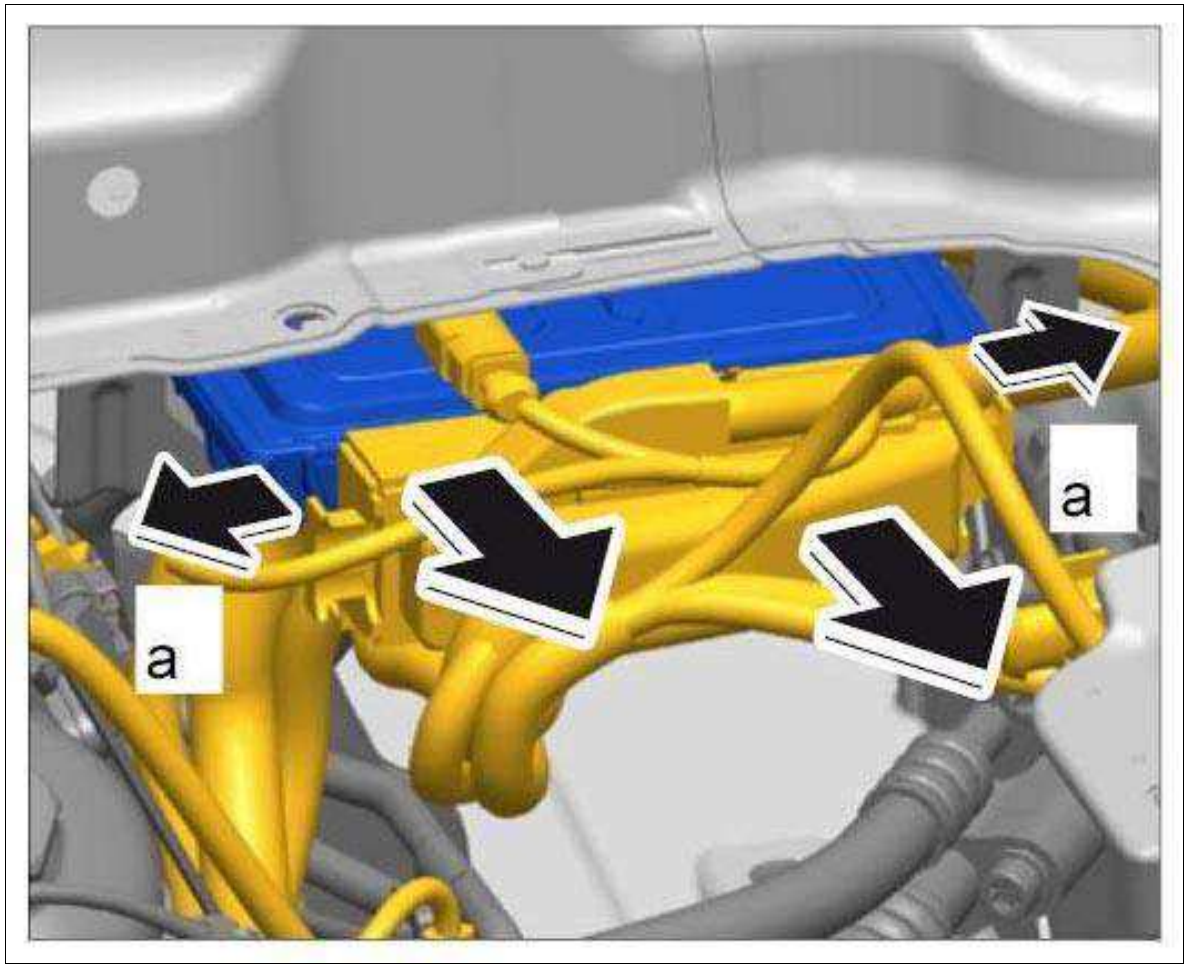

Courtesy of PORSCHE CARS NORTH AMERICA, INC.

2. Loosen holder with DME control unit.

Fig 3: Loosening Holder With DME Control Unit

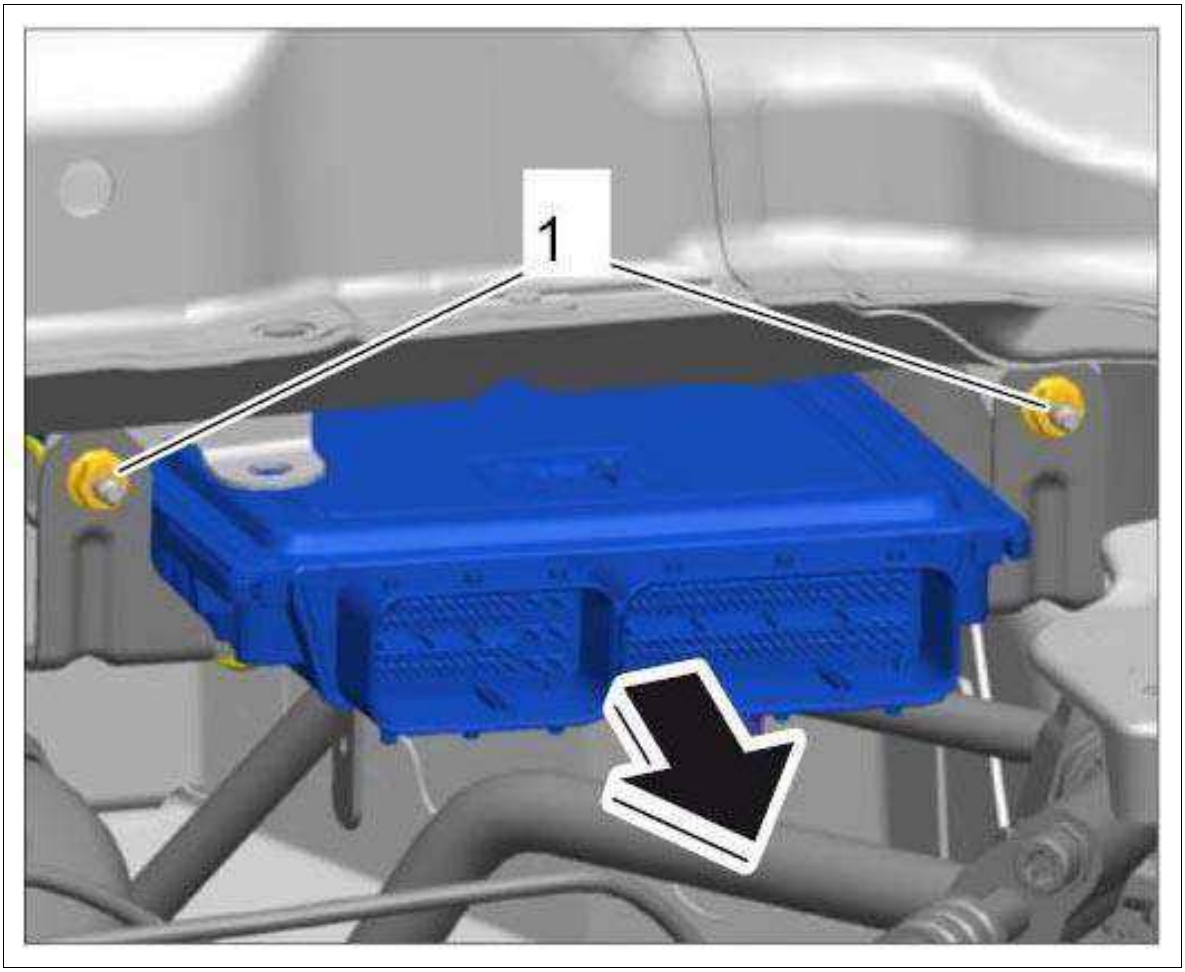

Courtesy of PORSCHE CARS NORTH AMERICA, INC.

1. 2.1. Screw off fastening nuts **-1-** for DME control unit holder.
2. 2.2. Remove holder with DME control unit from the body.

GT3 vehicles

3. Unclip vacuum line **-1-** from the holder **-2-** in a downward direction.

All vehicles

4. Release fixing clip **-3-** on the engine wire harness **-a-** and pull it down.

Fig 4: Disconnecting Lines

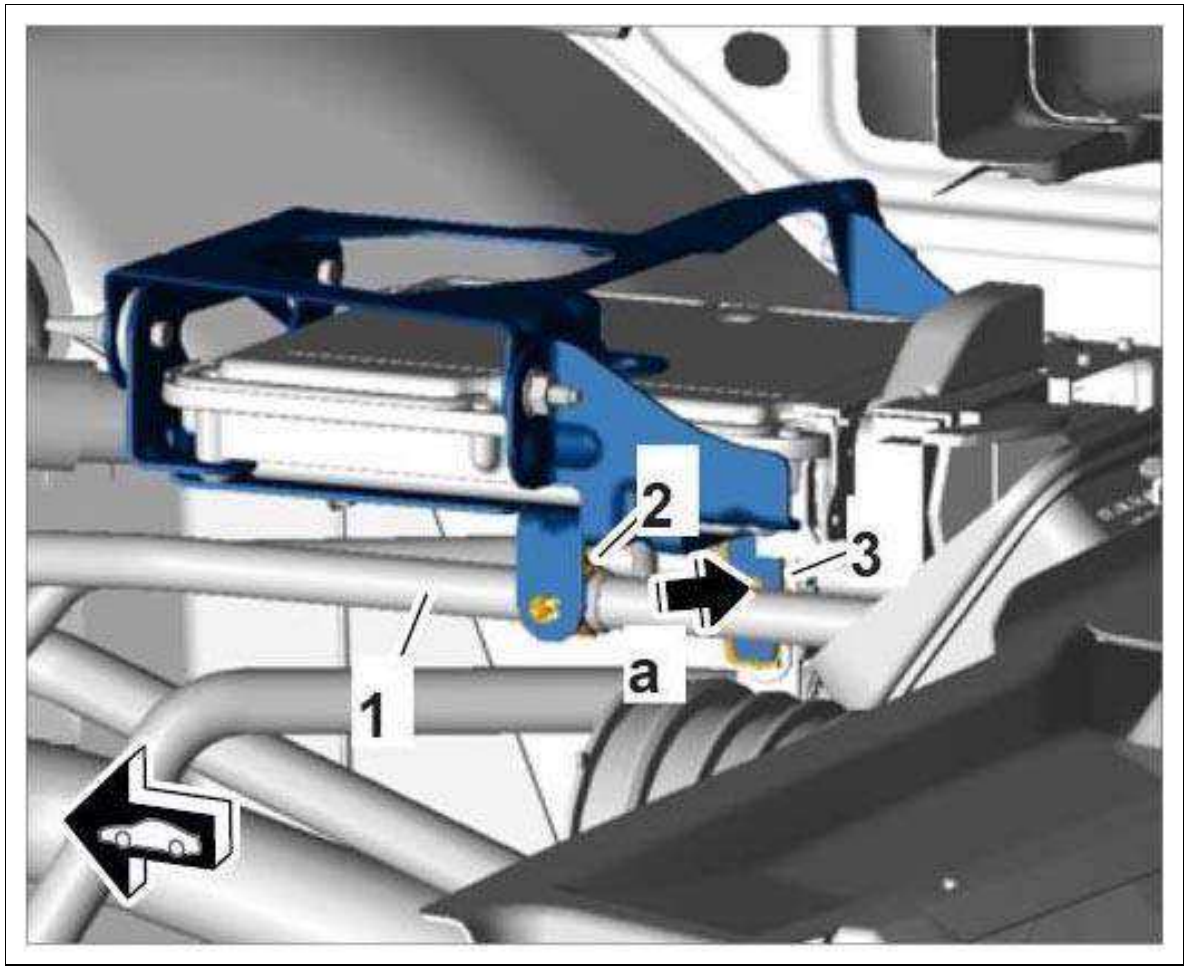

Courtesy of PORSCHE CARS NORTH AMERICA, INC.

GT3 vehicles

5. If you are replacing the DME control unit, remove the faulty DME control unit from the holder.
    1. 5.1. Unscrew and remove fastening screws **-1-** .
    2. 5.2. Pull DME control unit **-2-** out of the holder **-3-** (**-a-**).

    All vehicles (except GT3)

6. If you are replacing the DME control unit, remove holder for the faulty DME control unit.
    1. 6.1. Unscrew and remove fastening screws **-4-** .
    2. 6.2. Remove holder **-5-** for the DME control unit **-6-** .

Fig 5: Removing DME Control Unit From Holder

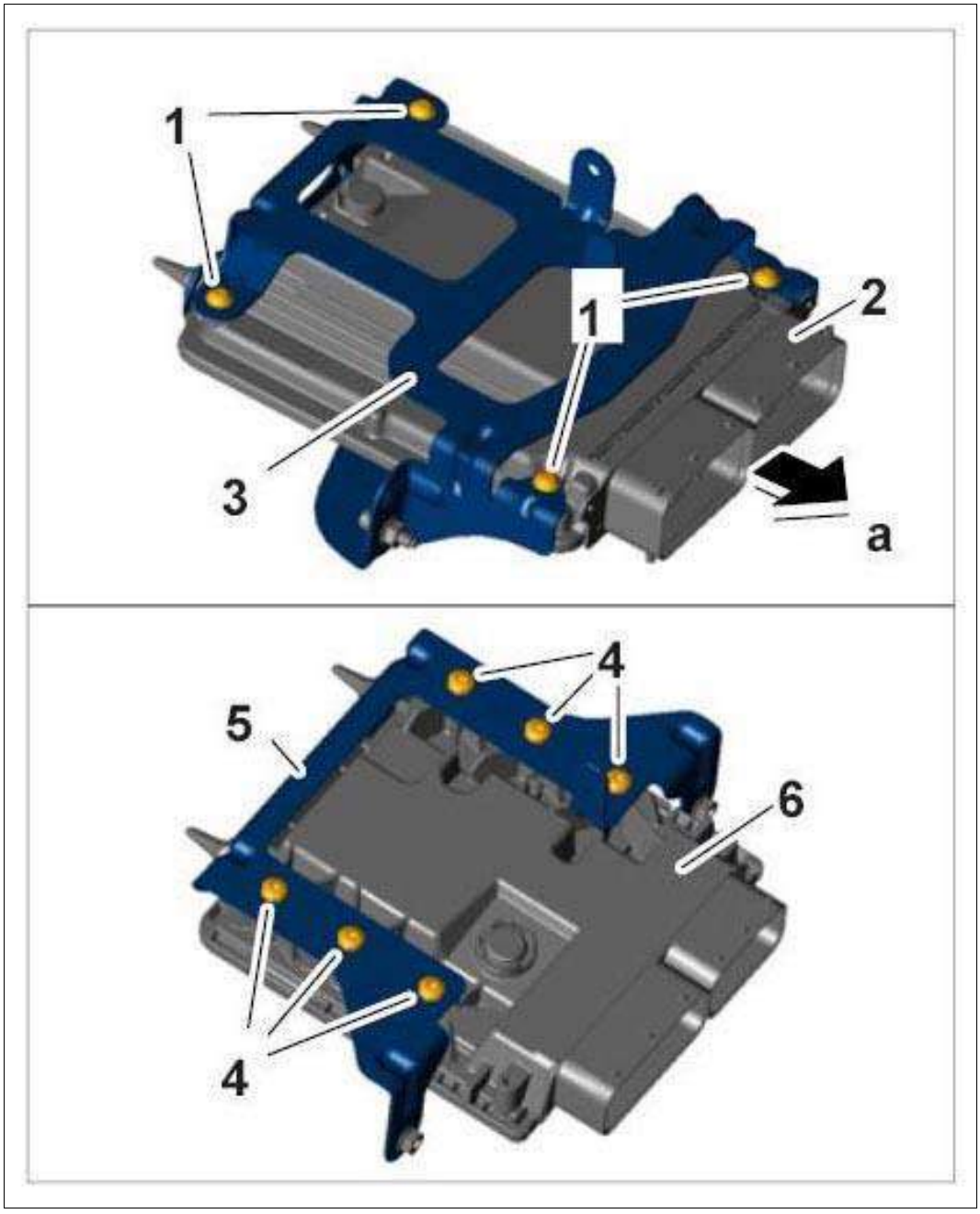

Courtesy of PORSCHE CARS NORTH AMERICA, INC.

WM 247019 REMOVING AND INSTALLING DME CONTROL UNIT (EXCEPT CARRERA "EDITION", CARRERA CABRIOLET "EDITION", CARRERA 4 "EDITION", TARGA 4, TARGA 4S, TARGA 4 GTS, CARR. 4 CABRIO, CARR. 4S CABRIO, TURBO CABRIO, CARR. 4 GTS CABRIO, TURBO S CABRIO, CARRERA 4 CABRIOLET "EDITION") > INSTALLING DME CONTROL UNIT > GT3 VEHICLES

1. If you are replacing the DME control unit, install the new DME control unit in the holder.

    1. 1.1. Slide DME control unit **-1-** into holder **-2-** (**-a-**).

2. 1.2. Tighten screws **-3-** .

All vehicles (except GT3)

2. If you are replacing the DME control unit, attach holder to the new DME control unit.

1. 2.1. Position holder **-4-** on the DME control unit **-5-** .

2. 2.2. Tighten screws **-6-** .

Fig 1: Attaching Holder To DME Control Unit

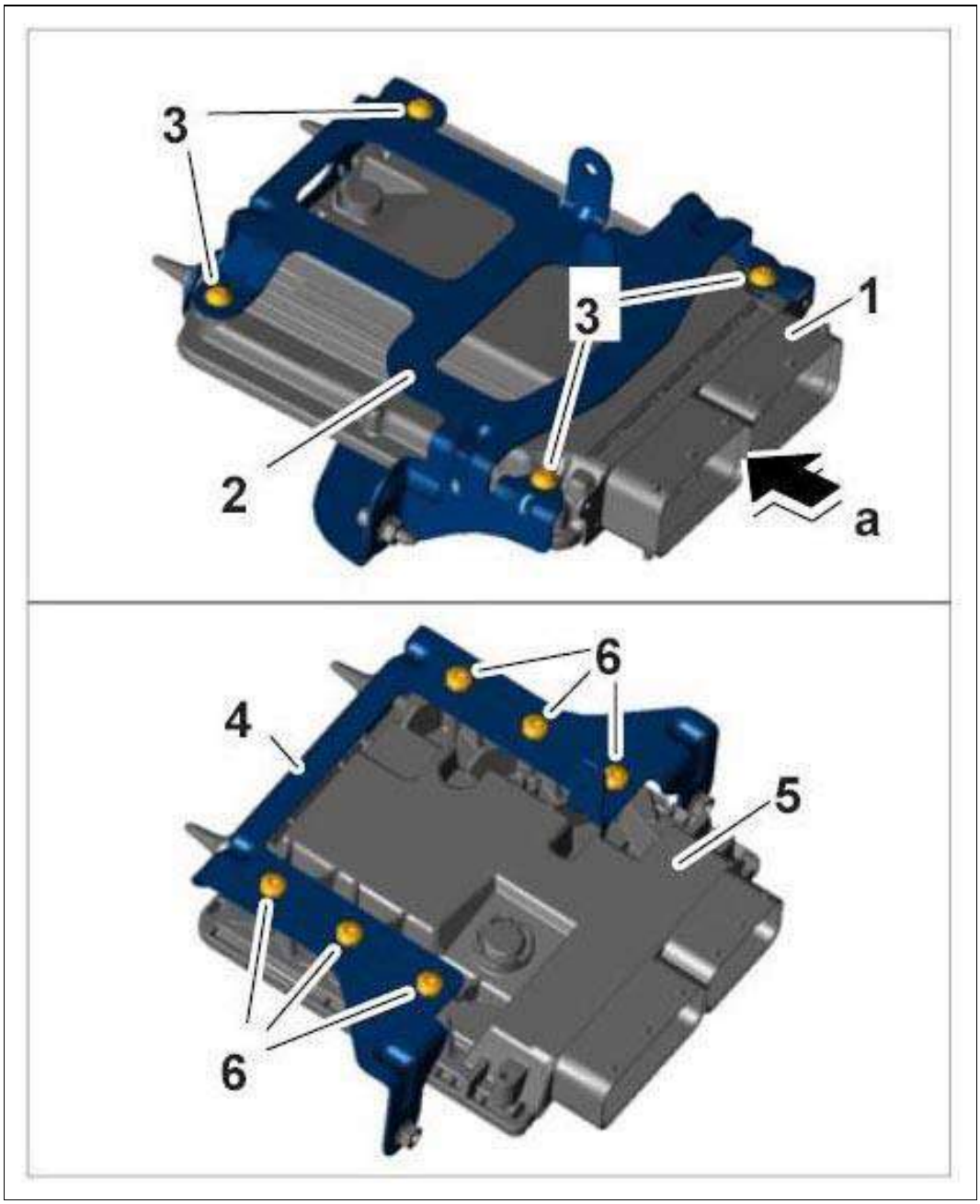

Courtesy of PORSCHE CARS NORTH AMERICA, INC.

3. Check condition of rubber mountings **-1-** on the holder **-2-** and make sure that they are fitted correctly. Replace damaged rubber mountings.

Fig 2: Checking Rubber Mountings

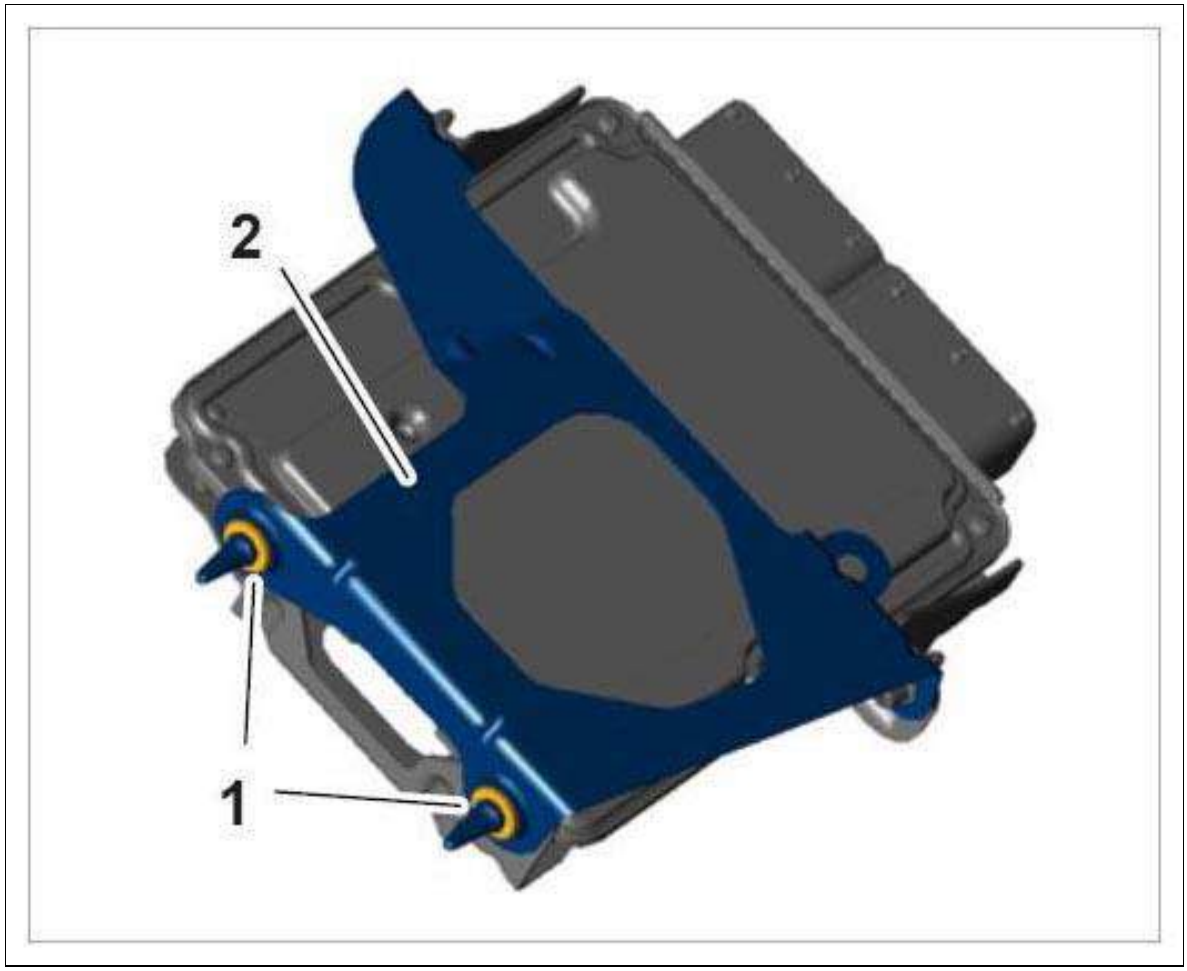

Courtesy of PORSCHE CARS NORTH AMERICA, INC.

4. **GT3 vehicles**

   Clip vacuum line **-1-** into the holder **-2-** .

5. **All vehicles**

   Fit fixing clip **-3-** for engine wire harness on the DME control unit holder until the fixing clip engages securely.

Fig 3: Clipping Lines

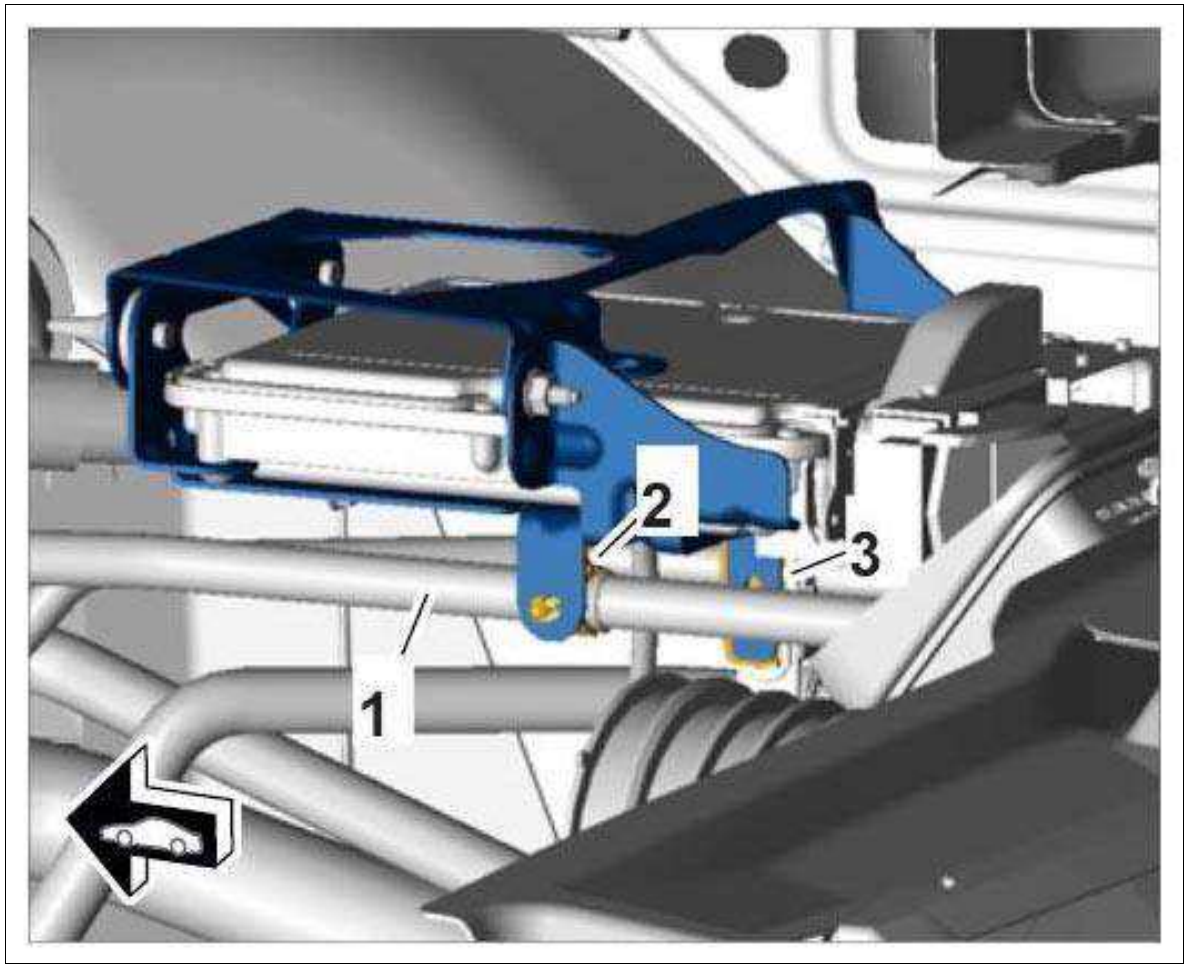

Courtesy of PORSCHE CARS NORTH AMERICA, INC.

6. Position DME control unit with holder in such a way that the guide pins **-1-** with the rubber mountings engage in the bracket on the body.

Fig 4: Positioning DME Control Unit

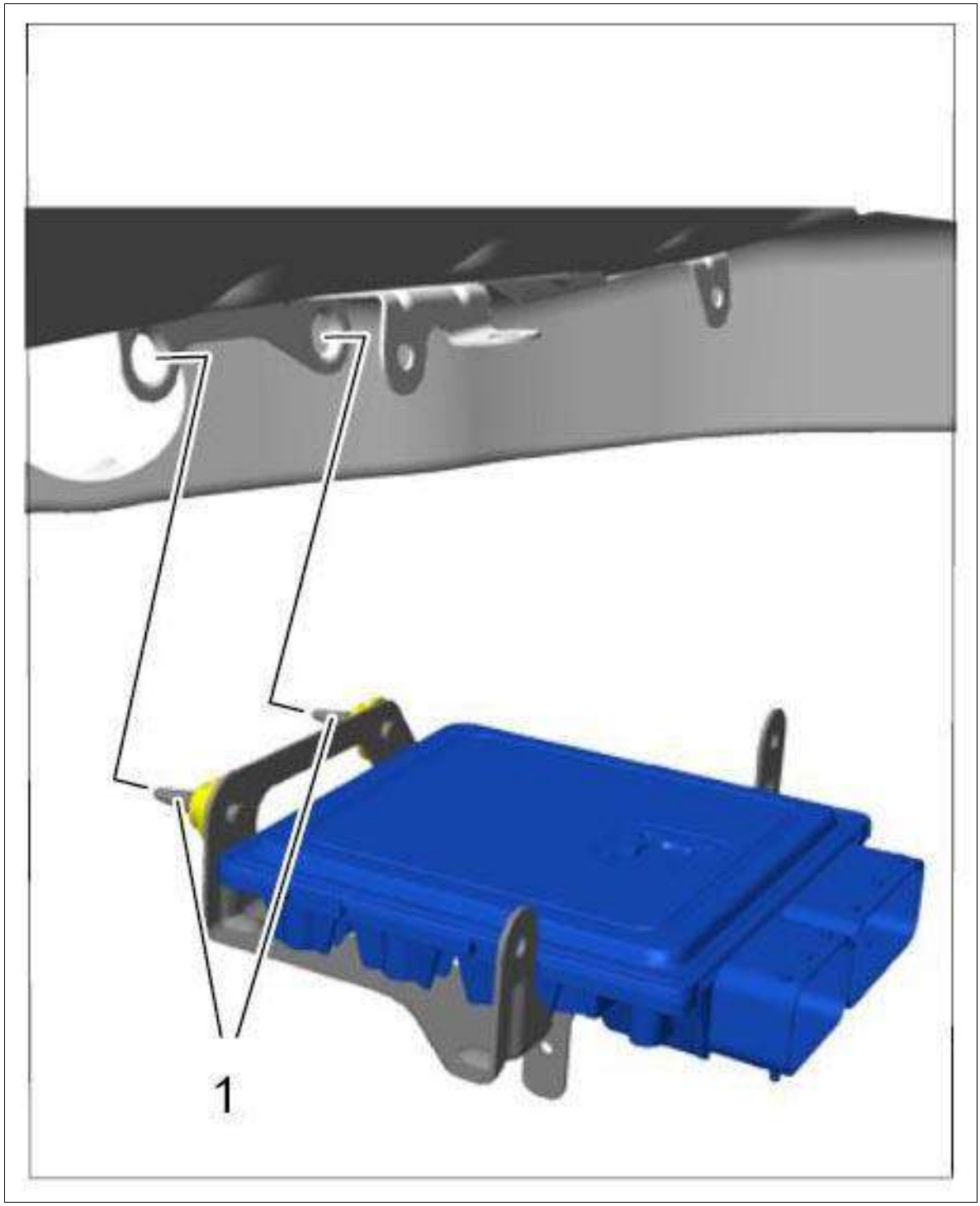

Courtesy of PORSCHE CARS NORTH AMERICA, INC.

7. Secure DME control unit.

Fig 5: Securing DME Control Unit

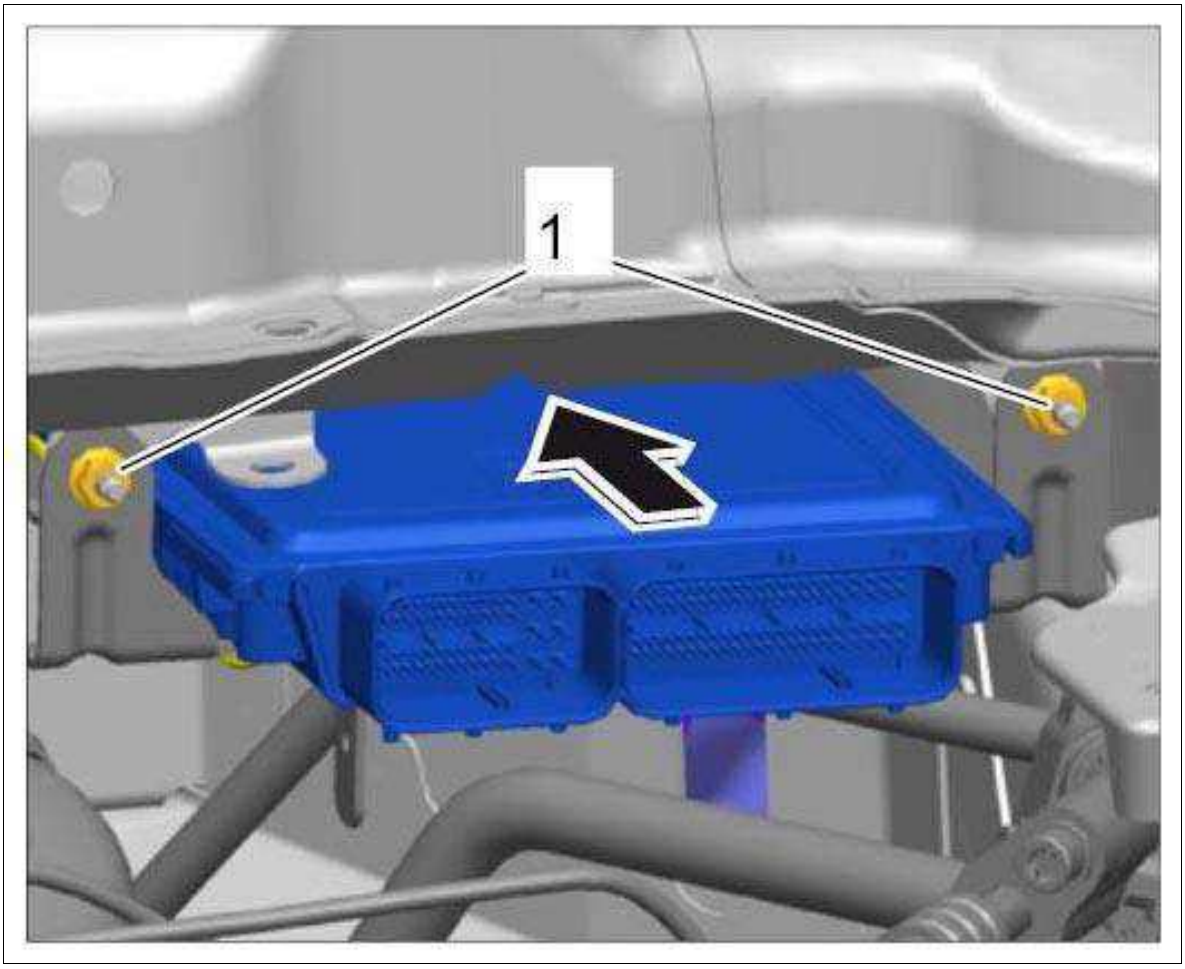

Courtesy of PORSCHE CARS NORTH AMERICA, INC.

1. 7.1. Press DME control unit onto the bracket on the body using slight pressure **-arrow-** .
2. 7.2. Tighten fastening nuts **-1-** . **Tightening torque 9 Nm (6.5 ftlb.)**

8. Connect plug connections **-arrows-** and lock them **-a-** .

Fig 6: Connecting Plug Connections

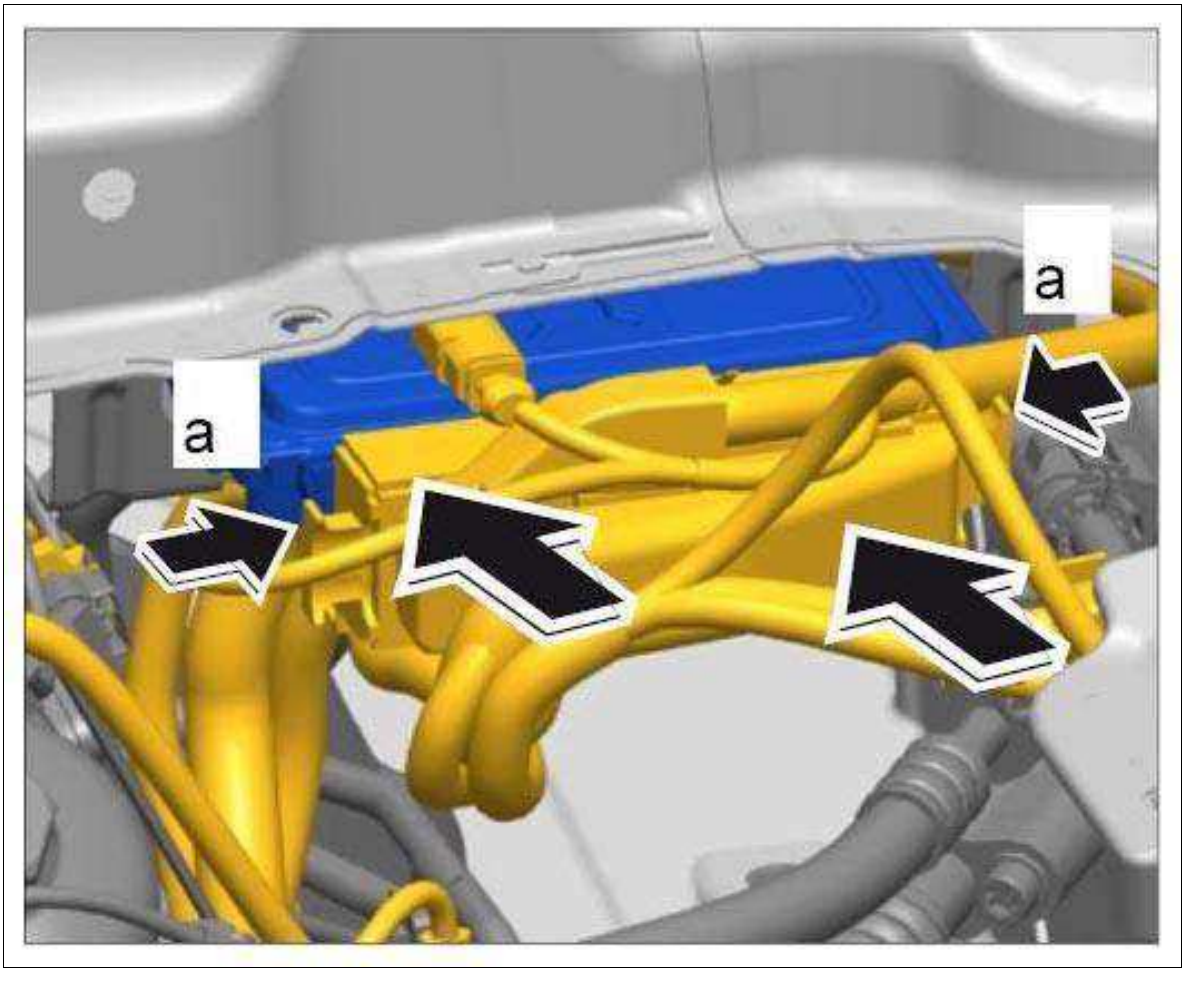

Courtesy of PORSCHE CARS NORTH AMERICA, INC.

WM 247019 REMOVING AND INSTALLING DME CONTROL UNIT (EXCEPT CARRERA "EDITION", CARRERA CABRIOLET "EDITION", CARRERA 4 "EDITION", TARGA 4, TARGA 4S, TARGA 4 GTS, CARR. 4 CABRIO, CARR. 4S CABRIO, TURBO CABRIO, CARR. 4 GTS CABRIO, TURBO S CABRIO, CARRERA 4 CABRIOLET "EDITION") > SUBSEQUENT WORK > SUBSEQUENT WORK FOR REMOVING AND INSTALLING DME CONTROL UNIT

1. If the DME control unit was replaced, the new DME control unit must be adapted to suit the vehicle using **PIWIS Tester II 9818** . → 247055 REPLACING DME CONTROL UNIT

2. **GT3 vehicles**

   Install cross member with lower part of rear lid lock. → 558619 REMOVING AND INSTALLING LOWER PART OF REAR LID LOCK

3. **All vehicles (except GT3)**

   Install rear spoiler. → Installing Rear Spoiler

WM 247055 REPLACING DME CONTROL UNIT (EXCEPT CARRERA "EDITION",

CARRERA CABRIOLET "EDITION", CARRERA 4 "EDITION", TARGA 4, TARGA 4S, TARGA 4 GTS, CARR. 4 CABRIO, CARR. 4S CABRIO, TURBO CABRIO, CARR. 4 GTS CABRIO, TURBO S CABRIO, CARRERA 4 CABRIOLET "EDITION") > TOOLS

Designation	Type	Number	Description
PIWIS Tester II	Special tool	9818	

WM 247055 REPLACING DME CONTROL UNIT (EXCEPT CARRERA "EDITION", CARRERA CABRIOLET "EDITION", CARRERA 4 "EDITION", TARGA 4, TARGA 4S, TARGA 4 GTS, CARR. 4 CABRIO, CARR. 4S CABRIO, TURBO CABRIO, CARR. 4 GTS CABRIO, TURBO S CABRIO, CARRERA 4 CABRIOLET "EDITION") > TECHNICAL VALUES

Location	Description	Type	Basic value	Tolerance 1	Tolerance 2
Current rating		Nominal value	40 A		

WM 247055 REPLACING DME CONTROL UNIT (EXCEPT CARRERA "EDITION", CARRERA CABRIOLET "EDITION", CARRERA 4 "EDITION", TARGA 4, TARGA 4S, TARGA 4 GTS, CARR. 4 CABRIO, CARR. 4S CABRIO, TURBO CABRIO, CARR. 4 GTS CABRIO, TURBO S CABRIO, CARRERA 4 CABRIOLET "EDITION") > INFORMATION: ADAPTATION OF THE DME (DFI) CONTROL UNIT

Information

If the DME (DFI) control unit is replaced, it must be programmed using the **PIWIS Tester II 9818** . This adapts the DME (DFI) control unit to the vehicle, country version and equipment.

Before the DME (DFI) control unit is removed and replaced, a read-out of the vehicle data should be obtained (if possible) using the **PIWIS Tester II 9818** .

The **PIWIS Tester II 9818** instructions take precedence and in the event of a discrepancy these are the instructions that must be followed. Deviations may occur with later software versions.

Information

If it is not possible to drive at the specified speeds, the adaptation ranges 1 to 5 can also be achieved by increasing the engine load relative to the specified speed. A defined fuel throughput must be achieved

for the adaptation to be completed.

The specified time stipulation of 15 sec. is cumulative, i.e. the time may also be broken down into 5 + 5 + 5 seconds, for example.

Information

Other information on adaptation can be found in the general information. → 2X00IN IMPORTANT INFORMATION ON ADAPTING THE DME CONTROL UNIT

Information

When replacing one of the following components **>> DME (DFI) control unit and/or high-pressure pump (also when replacing the engine) <<** from the fuel system, the adaptations in the DME (DFI) control unit must be adapted to the system again.

Rough engine running is possible until the adaptations are completed.

Noticeable decreases in engine performance may also occur.

The following procedure must be followed in the correct sequence in order to adapt the fuel high-pressure control system:

1. **PIWIS Tester II 9818** must be connected to the vehicle and started.
2. Select vehicle type and **DME/DFI** control unit.
3. Select the **Actual values, input signals** menu and press [>>].
4. Actual values **B_Fuel** , **T_Temperature**

   WARNING: Test drive with the Tester connected

   1. Driver impeded/steers off course during test drive

   2. Danger to other people on the roads

   → When the Tester is connected and switched on, route the diagnostic cable so that the driver is not impeded.

   → Only get one other person to read off the values on the Tester.

   → Only drive the vehicle to achieve the rpm and speed ranges specified in the document in accordance with road traffic regulations and if the road, weather and traffic conditions are conducive to such driving.

5. Select the required options and press [>>]:

   1. 5.1. **Engine temperature**
   2. 5.2. **Fuel high-pressure adaptation range 1**
   3. 5.3. **Fuel high-pressure adaptation range 2**
   4. 5.4. **Fuel high-pressure adaptation range 3**

6. Start the vehicle and let the engine warm up. During the test drive, at an engine temperature of at least **55 °C** , see Tester value for **engine temperature** , gradually approach the engine speed range of more than 2, 000 rpm, then switch from operation under load to overrun and maintain this operating condition for at least 5 seconds. >> The **leakage adaptation** has now been carried out. This value **cannot** be read out under the **actual values** .

7. **Fuel high-pressure adaptation range 1** must be reached: gradually approach the speed range of 60 - 85 km/h (40 - 55 mph) and maintain this for at least 15 seconds. The Tester indicates when the value changes upwards or downwards by 1.00. >> This completes the adaptation of **range 1** .

8. **Fuel high-pressure adaptation range 2** must be completed: gradually approach the speed range of 120 - 140 km/h (75 - 90 mph) and maintain this for at least 15 seconds. The Tester indicates when the value changes upwards or downwards by 1.00. >> This completes the adaptation of **range 2** .

9. **Fuel high-pressure adaptation range 3, 4, 5** These ranges do **not** need to be achieved for the adaptation drive.

    1. 9.1. Range 3 requires constant driving for 15 seconds in the speed range 210 - 220 km/h (130 - 140 mph). >> **Not required** for the adaptation drive.

    2. 9.2. Range 4 requires multiple full-throttle acceleration, each time for approx. 10 seconds at an engine speed of more than 4, 000 rpm. >> **Not required** for the adaptation drive.

10. Once ranges 1 and 2 have been adapted, the values must be between 0.75 and 1.25. If the values are < 0.75 or > 1.25, a fault is entered in the DME (DFI) control unit. If the values are in the stipulated range, another test drive must be performed for a distance of approx. 15 km or 9 miles (if feasible >> combination of motorway, cross-country and city driving). It is important that the drive includes different load and rpm ranges.

11. If range 1 and 2 are not within the stipulated range, the fault memory must be read out and the cause of the fault entries corrected.

12. Following the test drive, check the fault memory. If there are faults stored, the cause of the fault entries must be corrected.

WM 247055 REPLACING DME CONTROL UNIT (EXCEPT CARRERA "EDITION", CARRERA CABRIOLET "EDITION", CARRERA 4 "EDITION", TARGA 4, TARGA 4S, TARGA 4 GTS, CARR. 4 CABRIO, CARR. 4S CABRIO, TURBO CABRIO, CARR. 4 GTS CABRIO, TURBO S CABRIO, CARRERA 4 CABRIOLET "EDITION") > PROGRAMMING DME CONTROL UNIT > TEACHING NEW DME CONTROL UNIT

Information

The **PIWIS Tester II 9818** instructions take precedence since the description may be different with later Tester releases.

The procedure described here has been structured in general terms; different text or additions may appear in **PIWIS Tester II 9818** .

Information

All remote controls (keys) are required for teaching a DME, front-end electronics (front BCM), rear-end electronics (rear BCM), electronic steering lock (ELV) control unit or remote controls (keys) for example.

Remote controls (keys) that are not taught during this teaching procedure will no longer be recognised by the vehicle.

> *NOTE: Voltage drop*
>
> - *Risk of irreparable damage to control unit*
> - *Risk of damage to control unit*
> - *Fault entries in the control unit*
> - *Coding in the control unit is aborted*
> - *Malfunctions in control unit, even during programming*

→ Prior to disconnecting the control unit, switch off ignition and remove ignition key.

→ Ensure that the power supply is not interrupted during programming.

→ Connect a battery charger with a current rating of at least → **Nominal value: 40 A** to the vehicle battery.

1. **PIWIS Tester II 9818** must be connected to the vehicle before starting the System Tester. Switch on ignition using original remote control.
2. Select the vehicle type.
3. Select **DME** using the cursor keys and press [F12].
4. Switch to the **Maintenance/repairs** menu.
5. Select **Control unit replacement** using the cursor keys and press [F12].
6. Select **Read data** using the cursor keys and press [F12].
7. Press [F8] to start reading out data.
8. The message **Data was read out** appears on the Tester screen.
9. Switch off ignition and replace control unit. → 247019 REMOVING AND INSTALLING DME CONTROL UNIT
10. After you have installed the new DME control unit, switch to the **Control unit replacement** menu and select **Write values** to re-load the data that was read out.
11. Switch to the **Control unit replacement** menu.
12. Select **Write data** and press [F12].
13. Press [F8] to start writing data.

    Information

The wiper comes on once when DME programming is complete.

1. Do not place any objects on the windscreen.
2. Do not touch the windscreen during programming.

14. Switch to the **Programming** menu.
15. Select **Automatic programming** and press [F12] to start programming.
16. Switch ignition off and on again.
17. Go back to the Start page on the Tester.
18. Select the **Online teaching function** menu on the Start page.
19. Select **Vehicle** and press [F12]. Vehicle data will be read out.
20. The vehicle identification number (VIN) is displayed. Enter the vehicle identification number if necessary.
21. Enter the repair order number and press [F12].
22. Enter the PPN user name and password. [F12].
23. The Login is performed.
24. The Tester displays the message **Login successful** . Press [F12].
25. Follow the instructions on the Tester to select the required menu.
26. Once the teaching process is completed successfully, the Tester shows the following status, for example:

    2 keys taught

    BCM front: taught

    ELV: taught

    BCM rear: taught

    DME: taught

    Overall vehicle status: taught
27. [F12].
28. Press [EXIT] to exit the **Online teaching function** and select the **vehicle type** on the Start page.
29. For the learning and adaptation routine of the throttle valve (electronic accelerator), switch the ignition off and then on again for 60 seconds without starting the engine. Do not press the accelerator pedal. Switch ignition off again for at least 10 seconds. Switch on ignition. This completes the adaptation of the throttle valve adjusting unit and the teaching process is complete.
30. Press [F7] **Read all fault memories and erase if required and delete all faults.**

31. Perform DME control unit adaptation during a test drive and read out the fault memories again.

WM 247055 REPLACING DME CONTROL UNIT (EXCEPT CARRERA "EDITION", CARRERA CABRIOLET "EDITION", CARRERA 4 "EDITION", TARGA 4, TARGA 4S, TARGA 4 GTS, CARR. 4 CABRIO, CARR. 4S CABRIO, TURBO CABRIO, CARR. 4 GTS CABRIO, TURBO S CABRIO, CARRERA 4 CABRIOLET "EDITION") > TOOLS

Designation	Type	Number	Description
PIWIS Tester II	Special tool	9818	

WM 247055 REPLACING DME CONTROL UNIT (EXCEPT CARRERA "EDITION", CARRERA CABRIOLET "EDITION", CARRERA 4 "EDITION", TARGA 4, TARGA 4S, TARGA 4 GTS, CARR. 4 CABRIO, CARR. 4S CABRIO, TURBO CABRIO, CARR. 4 GTS CABRIO, TURBO S CABRIO, CARRERA 4 CABRIOLET "EDITION") > TECHNICAL VALUES

Location	Description	Type	Basic value	Tolerance 1	Tolerance 2
Current rating		Nominal value	40 A		

WM 247055 REPLACING DME CONTROL UNIT (EXCEPT CARRERA "EDITION", CARRERA CABRIOLET "EDITION", CARRERA 4 "EDITION", TARGA 4, TARGA 4S, TARGA 4 GTS, CARR. 4 CABRIO, CARR. 4S CABRIO, TURBO CABRIO, CARR. 4 GTS CABRIO, TURBO S CABRIO, CARRERA 4 CABRIOLET "EDITION") > INFORMATION: ADAPTATION OF THE DME CONTROL UNIT

Information

If the DME (DFI) control unit is replaced, it must be programmed using the **PIWIS Tester II 9818** . This adapts the DME (DFI) control unit to the vehicle, country version and equipment.

Before the DME (DFI) control unit is removed and replaced, a read-out of the vehicle data should be obtained (if possible) using the **PIWIS Tester II 9818** .

The **PIWIS Tester II 9818** instructions take precedence and in the event of a discrepancy these are the instructions that must be followed. Deviations may occur with later software versions.

Information

Other information on adaptation can be found in the general information. → 2X00IN IMPORTANT INFORMATION ON ADAPTING THE DME CONTROL UNIT

WM 247055 REPLACING DME CONTROL UNIT (EXCEPT CARRERA "EDITION", CARRERA CABRIOLET "EDITION", CARRERA 4 "EDITION", TARGA 4, TARGA 4S, TARGA 4 GTS, CARR. 4 CABRIO, CARR. 4S CABRIO, TURBO CABRIO, CARR. 4 GTS CABRIO, TURBO S CABRIO, CARRERA 4 CABRIOLET "EDITION") > PROGRAMMING DME CONTROL UNIT

Information

The **PIWIS Tester II 9818** instructions take precedence since the description may be different with later Tester releases.

The procedure described here has been structured in general terms; different text or additions may appear in **PIWIS Tester II 9818** .

Information

All remote controls (keys) are required for teaching a DME, front-end electronics (front BCM), rear-end electronics (rear BCM), electronic steering lock (ELV) control unit or remote controls (keys) for example.

Remote controls (keys) that are not taught during this teaching procedure will no longer be recognised by the vehicle.

NOTE: Voltage drop

- *Risk of irreparable damage to control unit*
- *Risk of damage to control unit*
- *Fault entries in the control unit*
- *Coding in the control unit is aborted*
- *Malfunctions in control unit, even during programming*

→ Prior to disconnecting the control unit, switch off ignition and remove ignition key.

→ Ensure that the power supply is not interrupted during programming.

→ Connect a battery charger with a current rating of at least → **Nominal value: 40 A** to the vehicle battery.

1. **PIWIS Tester II 9818** must be connected to the vehicle before starting the System Tester. Switch on ignition using original remote control (hand-held transmitter).
2. Select the vehicle type.
3. Select **DME** using the cursor keys and press [F12].
4. Switch to the **Maintenance/repairs** menu.

5. Select **Control unit replacement** with the cursor keys and press [F12].
6. Select **Read data** with the cursor keys and press [F12].
7. Press [F8] to start reading out data.
8. The message **Data was read out** appears on the Tester screen.
9. Switch off ignition and replace control unit. → 247019 REMOVING AND INSTALLING DME CONTROL UNIT
10. After you have installed the new DME control unit, switch to the **Control unit replacement** menu and select **Write values** to re-load the data that was read out.
11. Switch to the **Control unit replacement** menu.
12. **Write data** must be selected. Then press [F12].
13. Press [F8] to start writing data.

    Information

    The wiper comes on once when DME programming is complete.

    1. Do not place any objects on the windscreen.
    2. Do not touch the windscreen during programming.

14. Switch to the **Programming** menu.
15. **Automatic programming** must be selected. Then press [F12] to start programming.
16. Switch ignition off and on again.
17. Go back to the Start page on the Tester.
18. Select the **Online teaching function** menu on the Start page.
19. **Select vehicle** and press [F12]. Vehicle data will be read out.
20. The vehicle identification number (VIN) is displayed. Change the vehicle identification number if necessary.
21. Enter the repair order number and press [F12].
22. Enter the PPN user name and password and press [F12].
23. The Login is performed.
24. The Tester displays the message **Login successful** . Press [F12].
25. Follow the instructions on the Tester to select the required menu.
26. Once the teaching process is completed successfully, the Tester shows the following status, for example:

    2 keys taught

    BCM front: taught

ELV: taught

BCM rear: taught

DME: taught

Overall vehicle status: taught

27. Press [F12].
28. Press EXIT to exit the **Online teaching function** and select the **vehicle type** on the Start page.
29. For the learning and adaptation routine of the throttle valve (electronic accelerator), switch the ignition off and then on again for 60 seconds without starting the engine. Do not press the accelerator pedal. Switch ignition off again for at least 10 seconds. Switch on ignition. This completes the adaptation of the throttle valve adjusting unit and the teaching process is complete.
30. Press [F7] **Read all fault memories and erase if required** and delete all faults.
31. The DME control unit is adapted during the test drive. Then read out the fault memory again.

WM 247319 REMOVING AND INSTALLING OXYGEN SENSOR DOWNSTREAM OF CATALYTIC CONVERTER (EXCEPT CARRERA "EDITION", CARRERA CABRIOLET "EDITION", TURBO S, CARRERA 4 "EDITION", TURBO CABRIO, TURBO S CABRIO, CARRERA 4 CABRIOLET "EDITION", GT3, GT3 RS) > TOOLS

Designation	Type	Number	Description	
Torque wrench	Commercially available tool	Nr.90 Pos.3		

Open ring wrench	Commercially available tool	Nr.96-3	
Insert adapter with universal joint	Commercially available tool	Nr.98-1 Pos.3	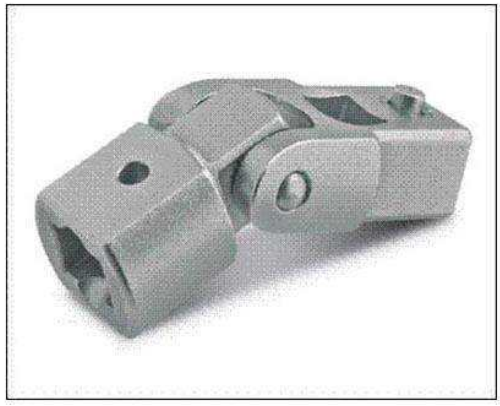

WM 247319 REMOVING AND INSTALLING OXYGEN SENSOR DOWNSTREAM OF CATALYTIC CONVERTER (EXCEPT CARRERA "EDITION", CARRERA CABRIOLET "EDITION", TURBO S, CARRERA 4 "EDITION", TURBO CABRIO, TURBO S CABRIO, CARRERA 4 CABRIOLET "EDITION", GT3, GT3 RS) > TECHNICAL VALUES

Location	Description	Type	Basic value	Tolerance 1	Tolerance 2
Oxygen sensor cable holder to cylinder head	Cheese head bolt, M6 x 12	Tightening torque	10 Nm (7.5 ftlb.)		
Oxygen sensor to catalytic converter	During re-installation, grease thread using prescribed lubricant	Tightening torque using prescribed tool	39 Nm (29 ftlb.)		

WM 247319 REMOVING AND INSTALLING OXYGEN SENSOR DOWNSTREAM OF CATALYTIC CONVERTER (EXCEPT CARRERA "EDITION", CARRERA CABRIOLET "EDITION", TURBO S, CARRERA 4 "EDITION", TURBO CABRIO, TURBO S CABRIO, CARRERA 4 CABRIOLET "EDITION", GT3, GT3 RS) > PRELIMINARY WORK

1. Remove rear spoiler.

   → 665819 REMOVING AND INSTALLING REAR SPOILER .

2. Remove tail lights.

   → 943119 REMOVING AND INSTALLING TAIL LIGHTS .

3. Remove air cleaner housing.

   → 242519 REMOVING AND INSTALLING AIR CLEANER HOUSING .

WM 247319 REMOVING AND INSTALLING OXYGEN SENSOR DOWNSTREAM OF CATALYTIC CONVERTER (EXCEPT CARRERA "EDITION", CARRERA CABRIOLET "EDITION", TURBO S, CARRERA 4 "EDITION", TURBO CABRIO, TURBO S CABRIO, CARRERA 4 CABRIOLET "EDITION", GT3, GT3 RS) > REMOVING OXYGEN SENSOR DOWNSTREAM OF CATALYTIC CONVERTER

NOTE: Incorrect handling of oxygen sensors

- *Damage to oxygen sensors*
- *Different exhaust emission behavior*

→ Do not remove the plastic cap on the thread until just prior to fitting.

→ Protect oxygen sensors from impact of any kind.

→ Do not kink or twist the cables when screwing in the sensors.

→ Do not re-use dirty or damaged components.

Installation overview, oxygen sensors 1-3

Fig 1: Overview Of Cylinder Bank 1-3

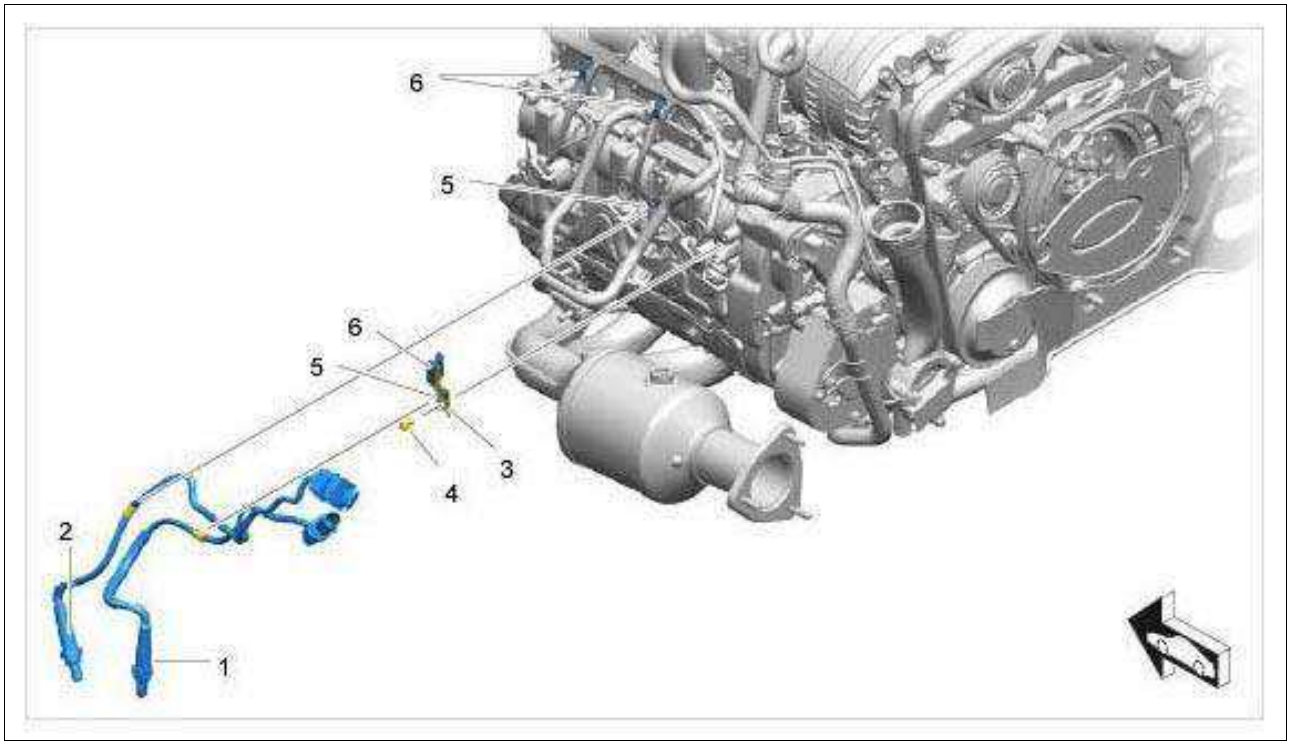

Courtesy of PORSCHE CARS NORTH AMERICA, INC.

1. Oxygen sensor downstream of catalytic converter
2. Oxygen sensor upstream of catalytic converter
3. Holder
4. Fastening screw **Tightening torque 10 Nm (7.5 ftlb.)**
5. Small retaining clip - Line securing for oxygen sensor downstream of catalytic converter
6. Large retaining clip - Line securing for oxygen sensor upstream of catalytic converter

Oxygen sensors on side 4-6

Fig 2: Overview Of Cylinder Bank 4-6

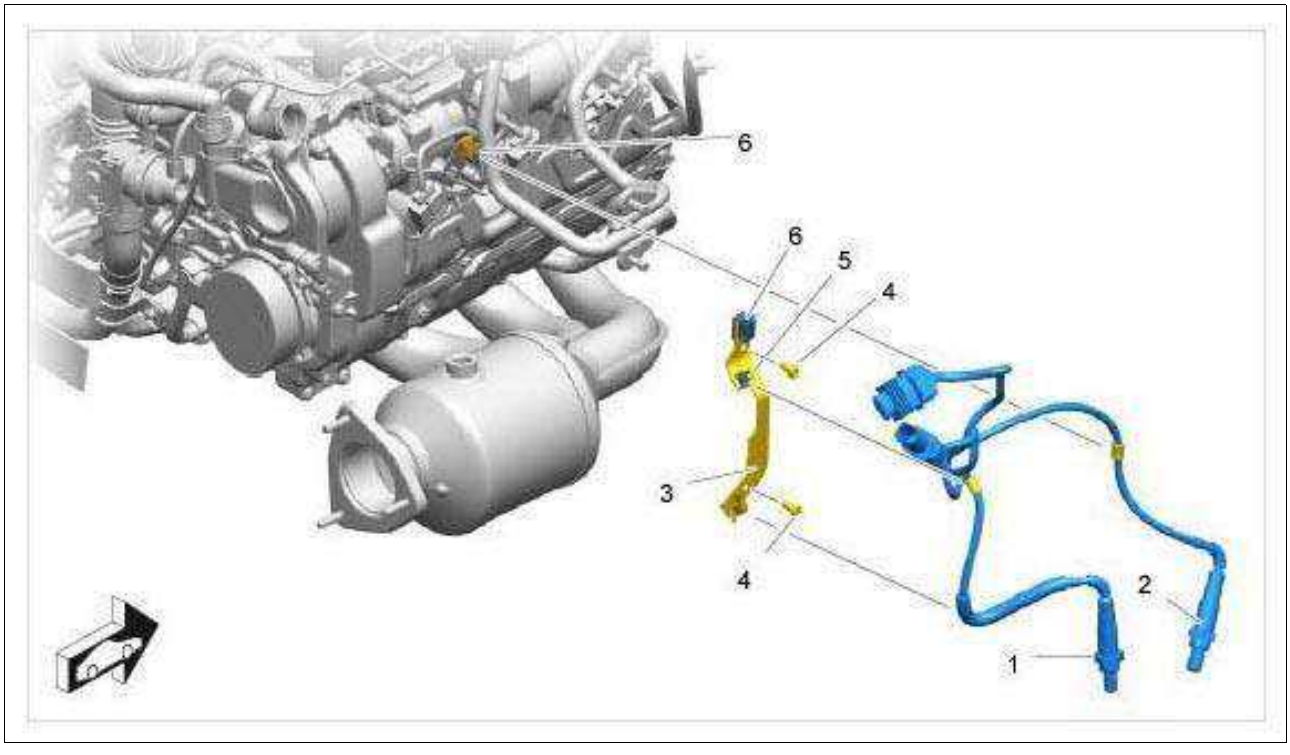

Courtesy of PORSCHE CARS NORTH AMERICA, INC.

1. Oxygen sensor downstream of catalytic converter
2. Oxygen sensor upstream of catalytic converter
3. Holder
4. Fastening screw **Tightening torque 10 Nm (7.5 ftlb.)**
5. Small retaining clip - Line securing for oxygen sensor downstream of catalytic converter
6. Large retaining clip - Line securing for oxygen sensor upstream of catalytic converter

1. Disconnect plug connection **-1-** .
    1. 1.1. Lift lock clip **-2-** and disconnect plug connection **-arrow-** .
    2. 1.2. Release and pull off connectors.

Fig 3: Pulling Oxygen Sensor Downstream Plug Connection Of Catalytic Converter

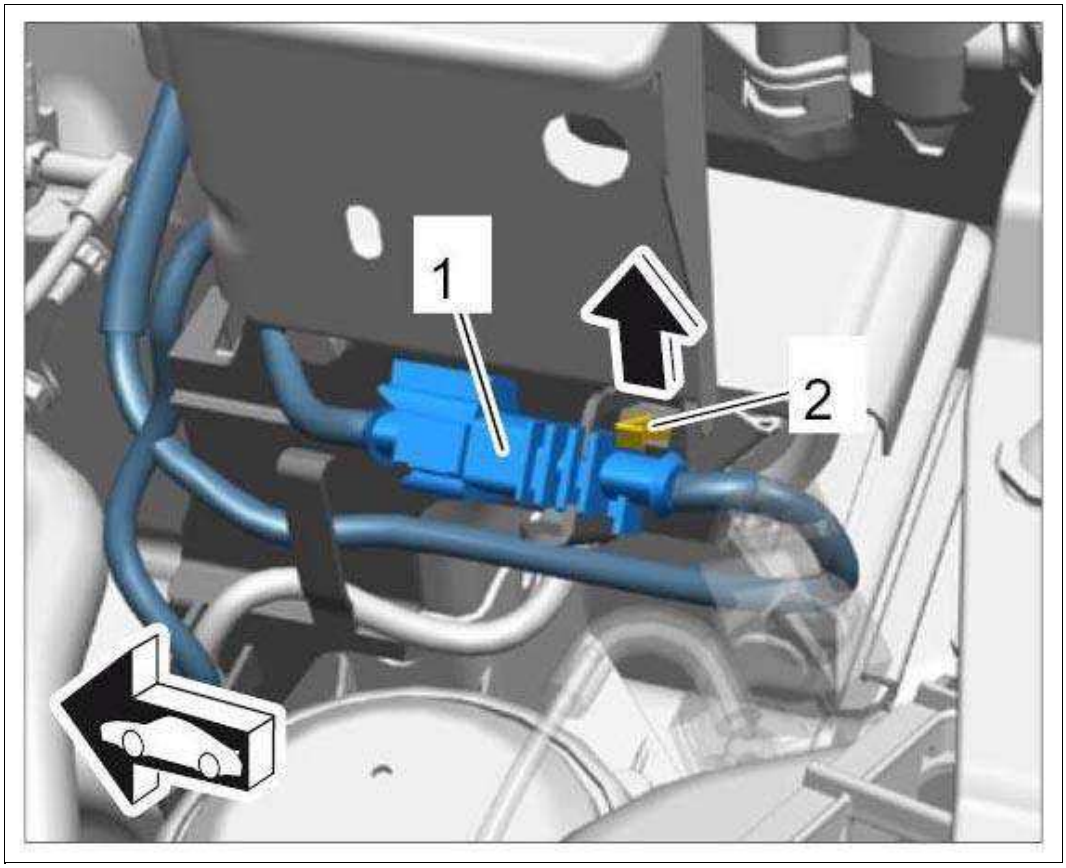

Courtesy of PORSCHE CARS NORTH AMERICA, INC.

2. Unclip oxygen sensor cable from the mounting points.

Tool recommendation:

1. **Torque wrench Nr.90 Pos.3**
2. **Insert adapter with universal joint Nr.98-1 Pos.3**
3. **Open ring wrench Nr.96-3** , width across flats 22 mm

Fig 4: Identifying Oxygen Sensors Tools

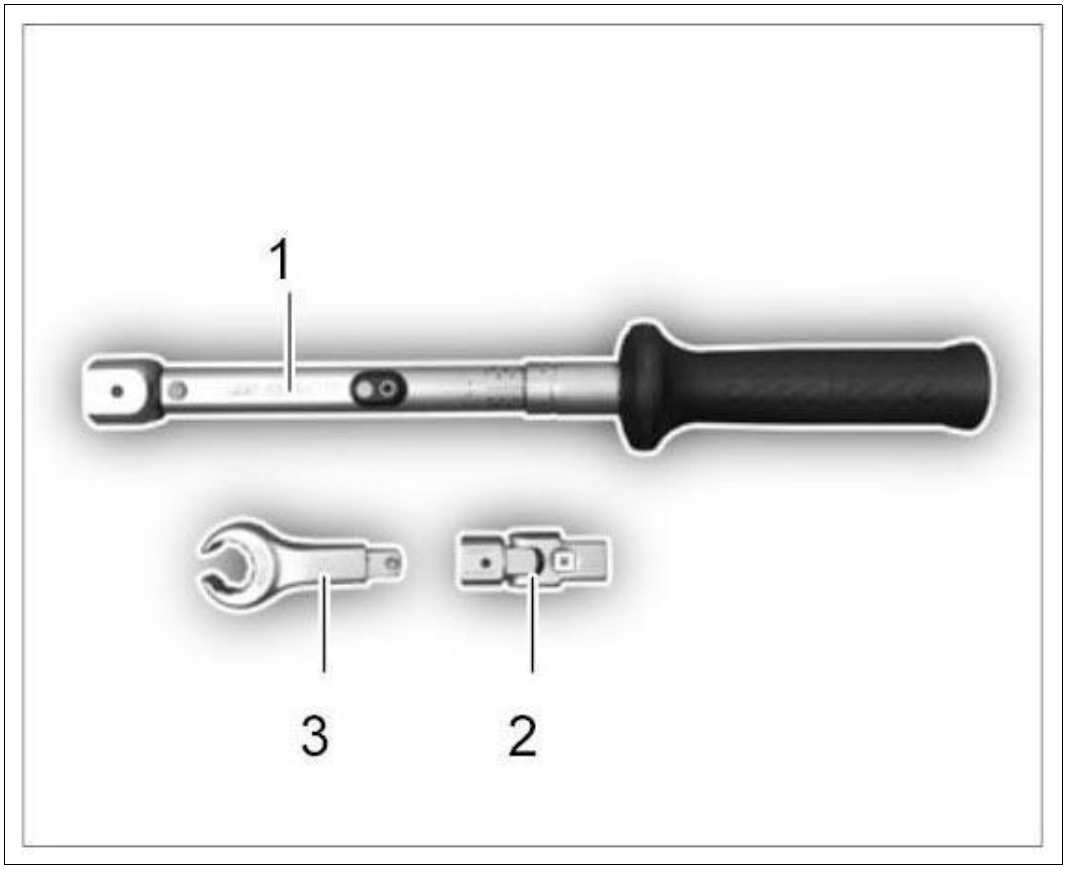

Courtesy of PORSCHE CARS NORTH AMERICA, INC.

3. Loosen oxygen sensor using the specified tool.

    1. 3.1. Unscrew oxygen sensor.

Fig 5: Tightening Oxygen Sensor Downstream Of Catalytic Converter

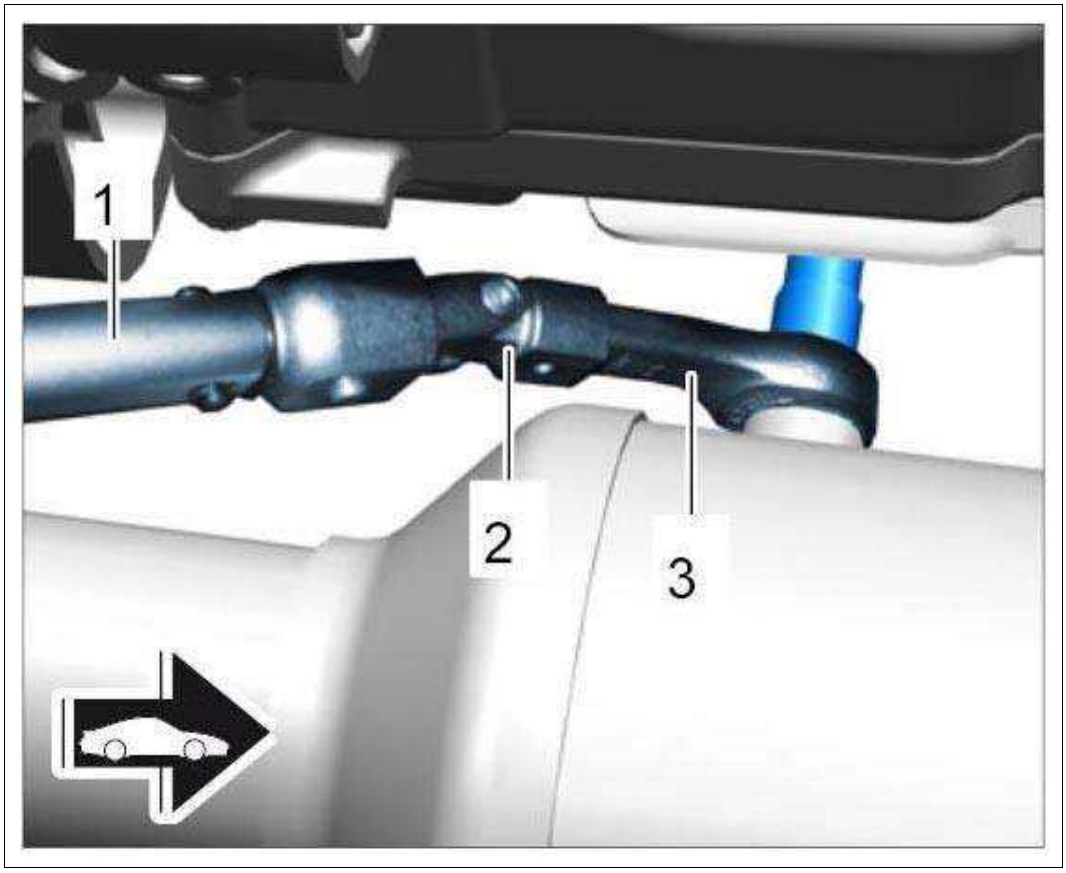

Courtesy of PORSCHE CARS NORTH AMERICA, INC.

4. Remove oxygen sensor and cable.

WM 247319 REMOVING AND INSTALLING OXYGEN SENSOR DOWNSTREAM OF CATALYTIC CONVERTER (EXCEPT CARRERA "EDITION", CARRERA CABRIOLET "EDITION", TURBO S, CARRERA 4 "EDITION", TURBO CABRIO, TURBO S CABRIO, CARRERA 4 CABRIOLET "EDITION", GT3, GT3 RS) > INSTALLING OXYGEN SENSOR DOWNSTREAM OF CATALYTIC CONVERTER

Information

- When reinstalling oxygen sensors, grease the thread with the Optimol Paste MF lubricant (Part No. 000.043.207.07) only.
- New oxygen sensors have already been greased and the thread is fitted with a protection cap.

1. When re-installing the oxygen sensor, coat the thread with the prescribed lubricant.

> *NOTE: Incorrect handling of oxygen sensors*
>
> *1. Damage to oxygen sensors*
>
> *2. Different exhaust emission behavior*

→ Do not remove the plastic cap on the thread until just prior to fitting.

→ Protect oxygen sensors from impact of any kind.

→ Do not kink or twist the cables when screwing in the sensors.

→ Do not re-use dirty or damaged components.

2. Screw in oxygen sensor by hand and tighten according to tightening specification.

   Tightening torque using prescribed tool 39 Nm (29 ftlb.)

   1. 2.1. **Use the same tool as specified in the removal description!**

3. Route oxygen sensor cable along the engine and secure it at the defined mounting points (see overview diagrams).

4. Route oxygen sensor cable in engine compartment and clip into the holder.

   1. 4.1. Close plug connection and lock into the holder.

WM 247319 REMOVING AND INSTALLING OXYGEN SENSOR DOWNSTREAM OF CATALYTIC CONVERTER (EXCEPT CARRERA "EDITION", CARRERA CABRIOLET "EDITION", TURBO S, CARRERA 4 "EDITION", TURBO CABRIO, TURBO S CABRIO, CARRERA 4 CABRIOLET "EDITION", GT3, GT3 RS) > SUBSEQUENT WORK

1. Install air cleaner housing.

   → Installing Air Cleaner Housing .

2. Install tail lights.

   → Installing Tail Light .

3. Installing rear spoiler

   → Installing rear spoiler .

WM 247419 REMOVING AND INSTALLING RESONANCE TUBE (EXCEPT CARRERA "EDITION", CARRERA CABRIOLET "EDITION", TURBO S, CARRERA 4 "EDITION", TURBO CABRIO, TURBO S CABRIO, CARRERA 4 CABRIOLET "EDITION", GT3, GT3 RS) > TOOLS

Designation	Type	Number	Description

hydraulic garage jack H 2 SL	Workshop equipment	WE 1032	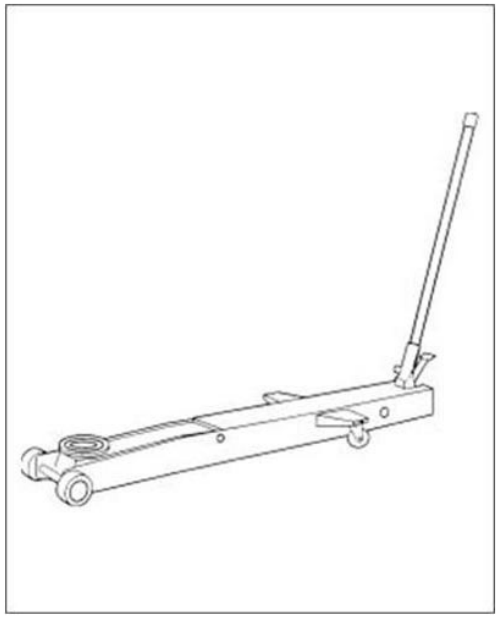
transmission jack V.A.G. 1383 A	Workshop equipment	WE 1082	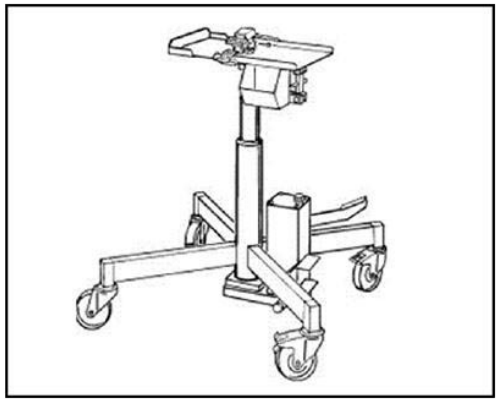

WM 247419 REMOVING AND INSTALLING RESONANCE TUBE (EXCEPT CARRERA "EDITION", CARRERA CABRIOLET "EDITION", TURBO S, CARRERA 4 "EDITION", TURBO CABRIO, TURBO S CABRIO, CARRERA 4 CABRIOLET "EDITION", GT3, GT3 RS) > PRELIMINARY WORK

1. Remove air cleaner:

   → 242519 REMOVING AND INSTALLING AIR CLEANER HOUSING .

2. Remove throttle housing.

   → 244219 REMOVING AND INSTALLING THROTTLE HOUSING .

   > *WARNING: Danger of objects or loads falling down*
   >
   > *1. Risk of squashing or crushing*

   → Secure components to prevent them from falling down.

   Information

1. It may only be supported over a large area at the oil pan.
2. Localized loading is not permitted.

3. Lower the engine.

→ 100109 LOWERING THE ENGINE .

1. 3.1. Support the engine at the oil pan using **hydraulic garage jack H 2 SL WE 1032** and transmission jack plate of **transmission jack V.A.G. 1383 A WE 1082** .
2. 3.2. Loosen two M12 collar nuts on the engine mount at the left and right only as much as required so that the engine flange is not touching the rear-axle cross member.

Information

1. When lowering, the engine must not rest on the rear axle cross member.

4. Slowly lower the engine using the jack.

5. Release cable duct on intake distributor 1-3 only.

1. 5.1. Unscrew screw **-item 1, left-** on intake distributor 1-3 to allow better access to the left clamp.

Fig 1: Identifying Cable Duct To Intake-Air Distributor Fastening Screws

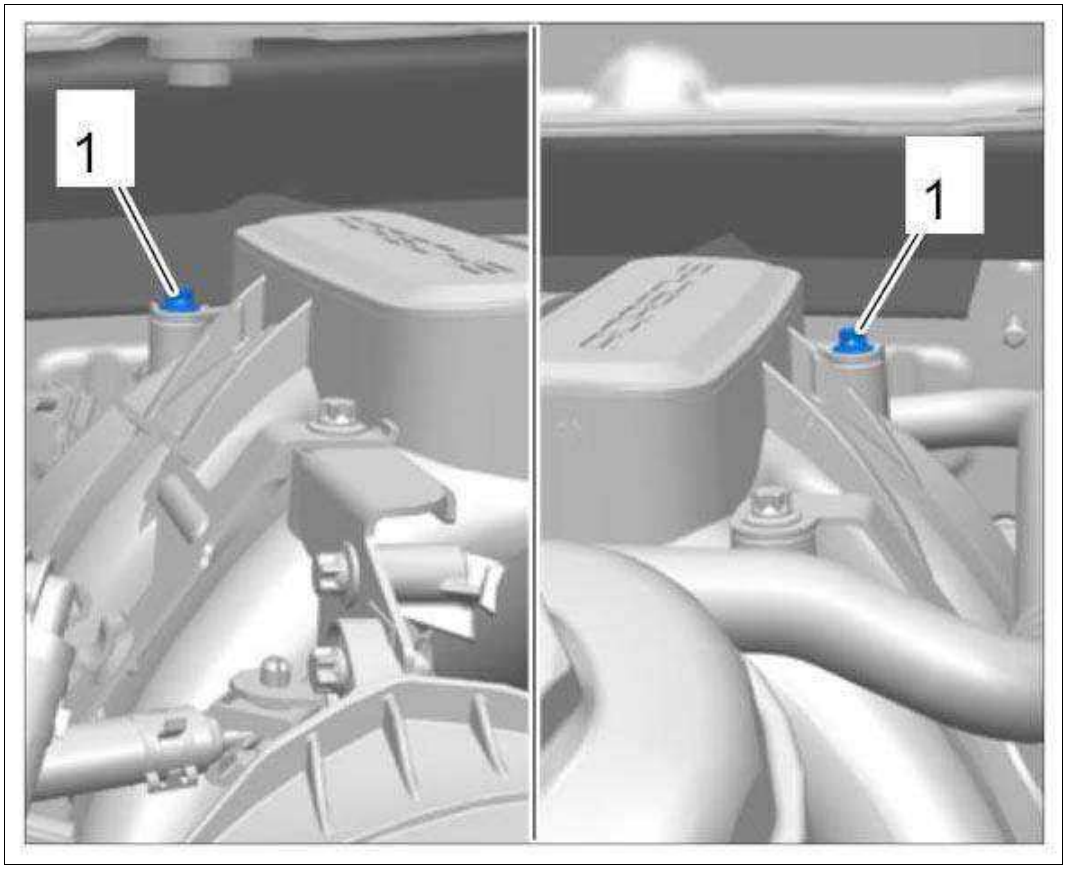

Courtesy of PORSCHE CARS NORTH AMERICA, INC.

WM 247419 REMOVING AND INSTALLING RESONANCE TUBE (EXCEPT CARRERA

"EDITION", CARRERA CABRIOLET "EDITION", TURBO S, CARRERA 4 "EDITION", TURBO CABRIO, TURBO S CABRIO, CARRERA 4 CABRIOLET "EDITION", GT3, GT3 RS) > REMOVING RESONANCE TUBE

Component overview

Fig 1: Identifying Resonance Tube Components

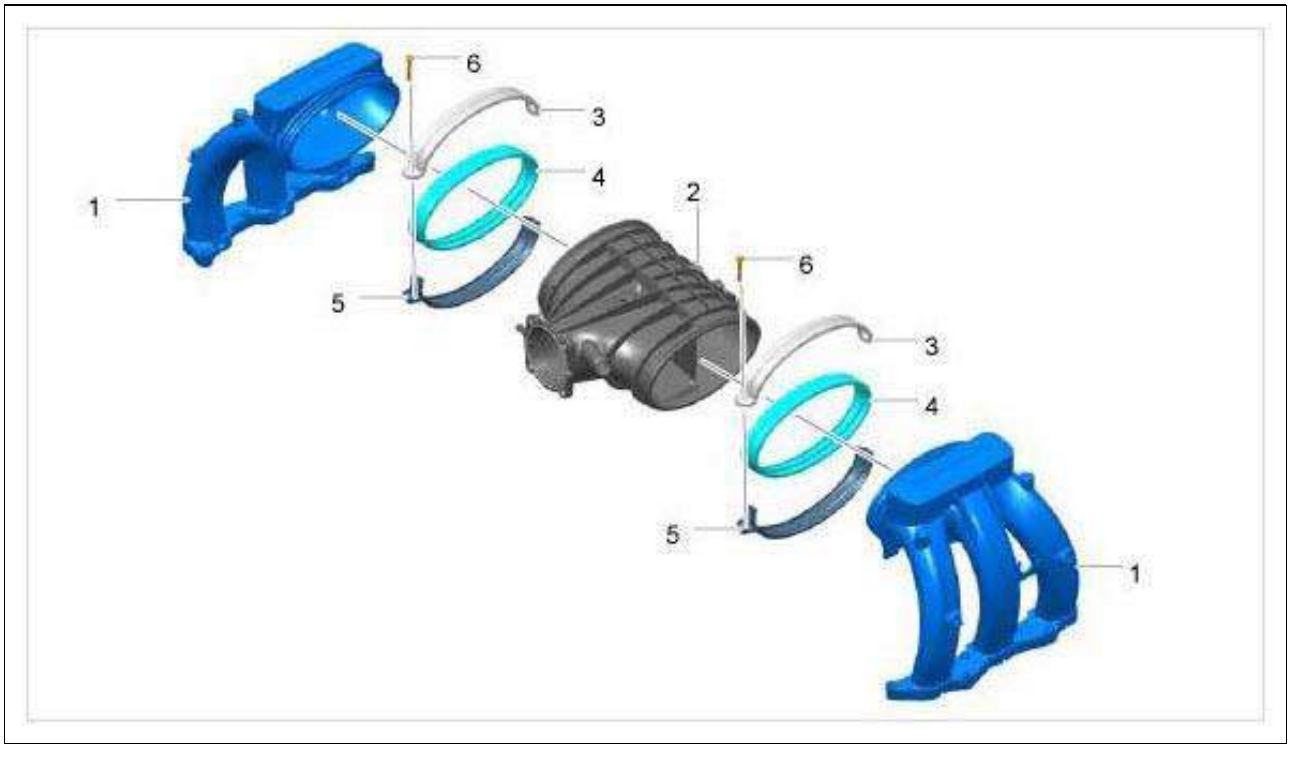

Courtesy of PORSCHE CARS NORTH AMERICA, INC.

1. Intake-air distributor
2. Resonance tube
3. Upper part of clamp
4. Rubber sleeve
5. Lower part of clamp
6. Countersunk screw (internal Torx), M6 x 35, micro-self-locking - replace screw

1. Disconnect cable plug for pressure sensor **-1-** , positive crankcase ventilation lines **-2 + 4-** and tank vent connection **-3-** .

Fig 2: Identifying Pressure Sensor Cable Plug, Positive Crankcase Ventilation Lines And Tank Ventilation

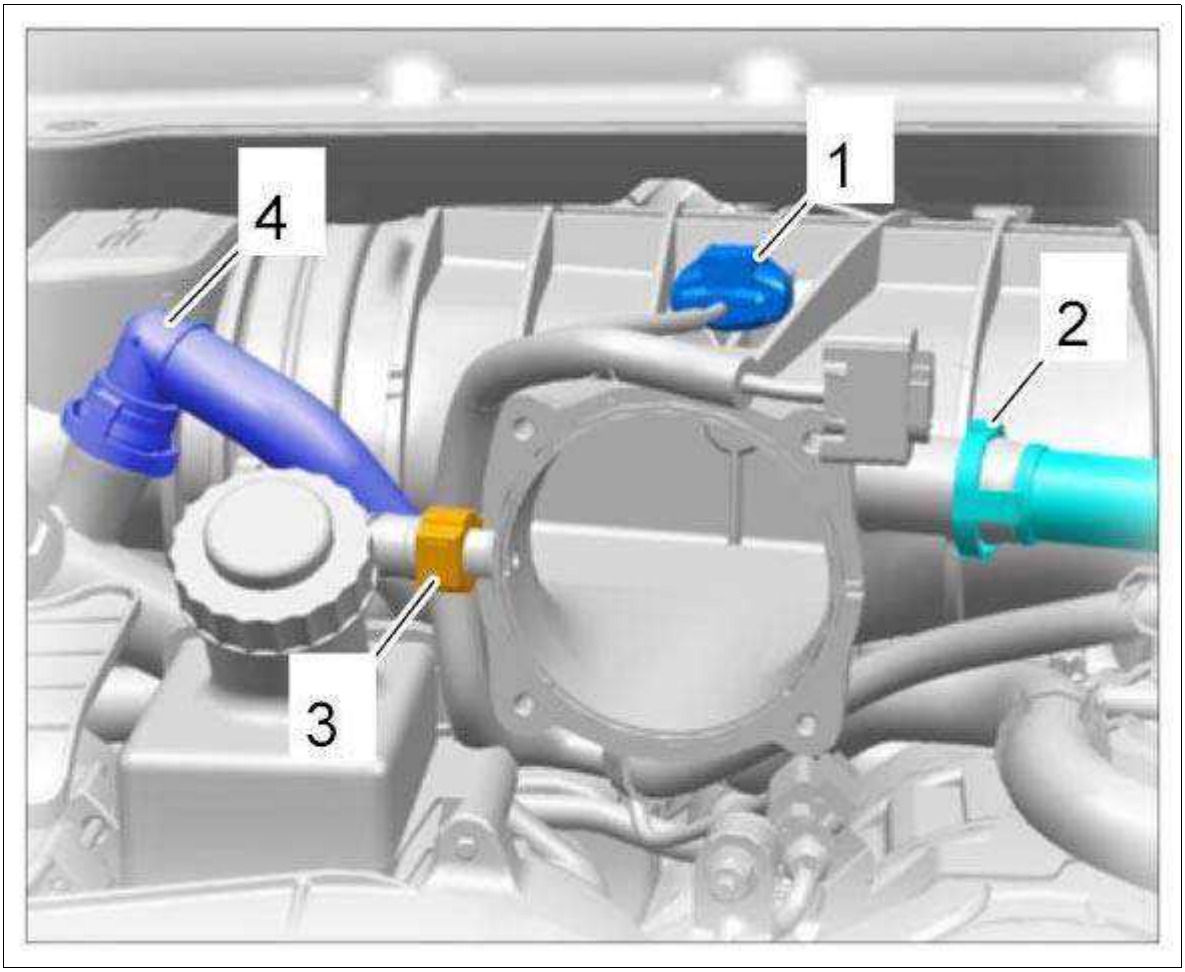

Courtesy of PORSCHE CARS NORTH AMERICA, INC.

2. Remove clamps **-1-** from the resonance tube.

    1. 2.1. Unscrew two M6 screws **-2-** , disengage clamp halves and remove them.
    2. 2.2. Press lower clamp halves downwards and pull them out.
    3. 2.3. The screws are micro-self-locking and must be replaced.

Fig 3: Identifying Resonance Tube Mounting

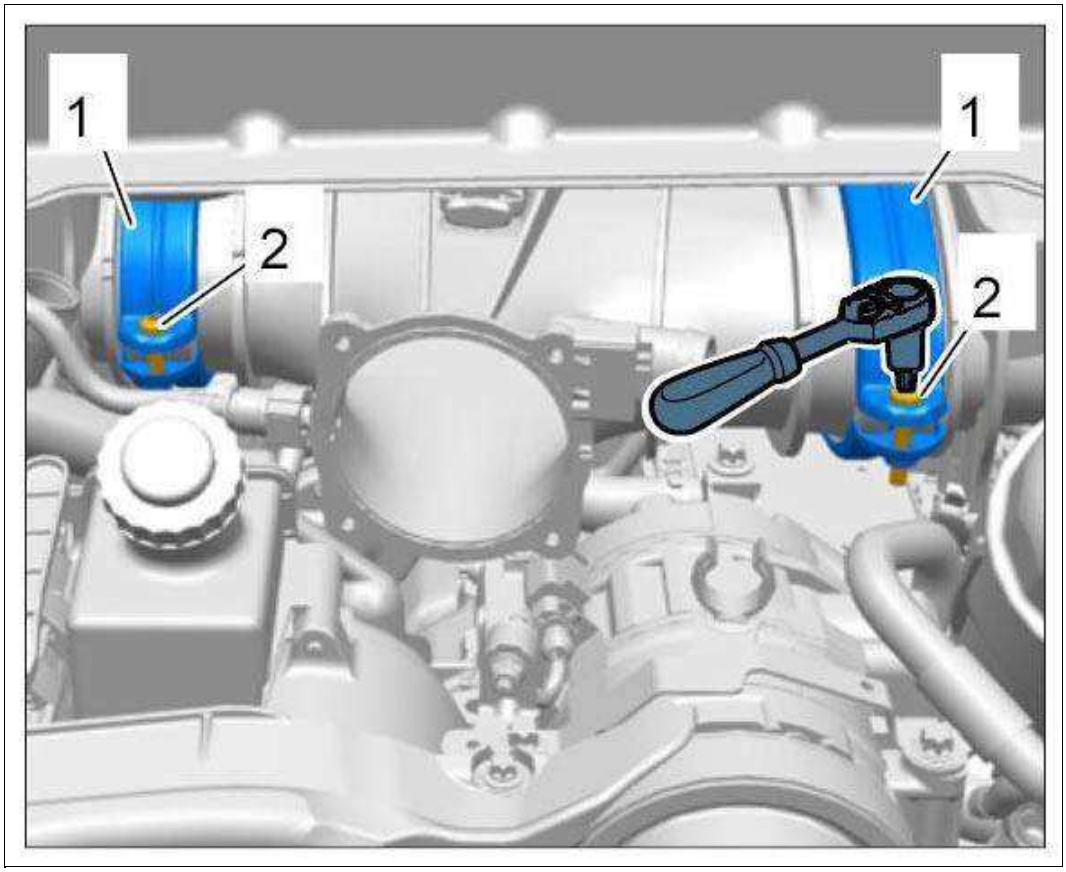

Courtesy of PORSCHE CARS NORTH AMERICA, INC.

3. Remove resonance tube.

    1. 3.1. Move rubber sleeves **-2-** inwards using a plastic spatula **-1-** . Lift rubber sleeve using the spatula and push it onto the resonance tube by hand.

Fig 4: Moving Rubber Sleeves

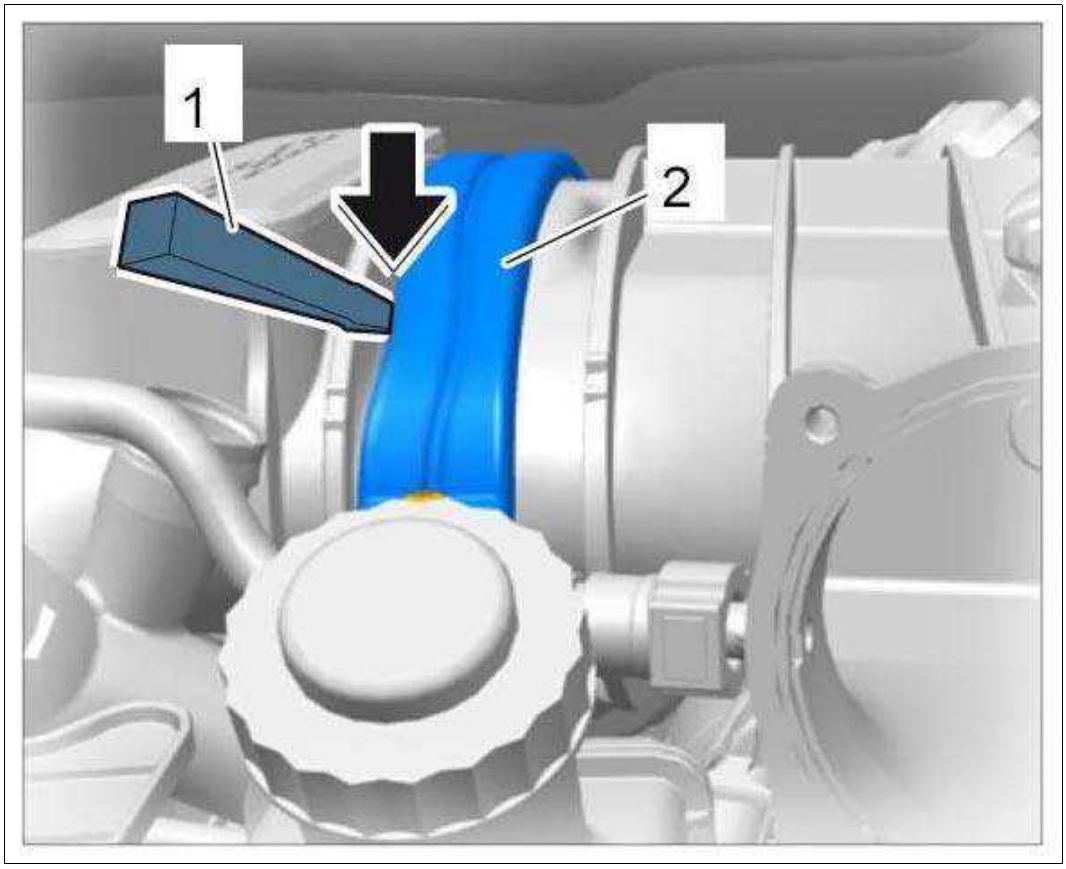

Courtesy of PORSCHE CARS NORTH AMERICA, INC.

2. 3.2. **3.8-litre engine only:** Also pull off vacuum line and cable plug on the control valve for the tuning flap.

    1. Resonance tube
    2. Control valve
    3. Vacuum unit
    4. Self-tapping screws

Fig 5: View Of Tuning Flap Components

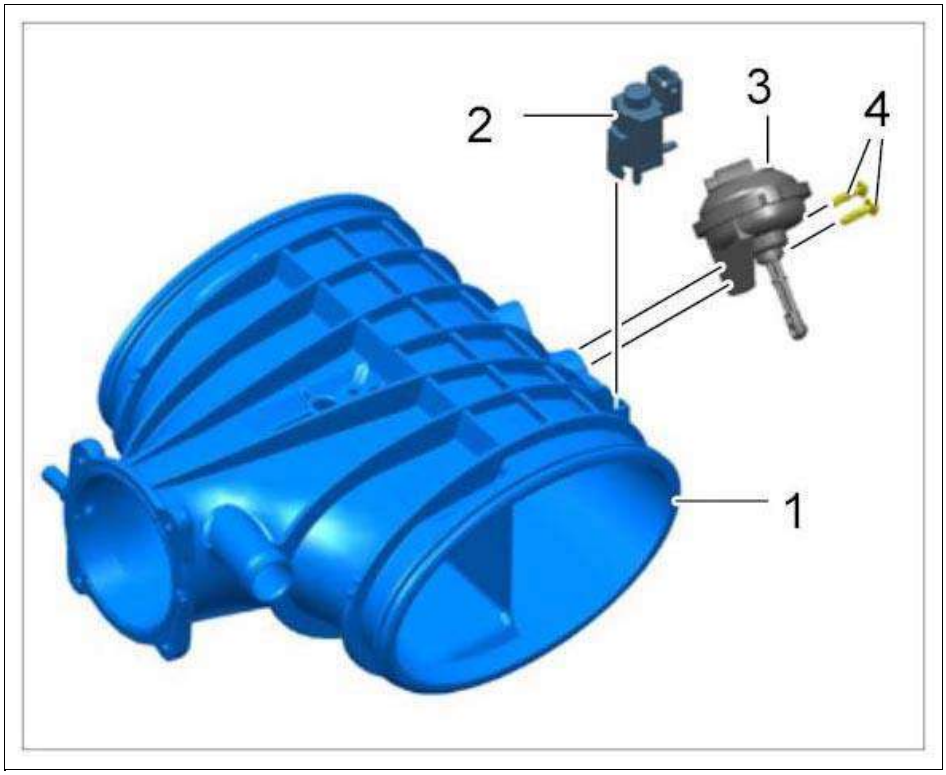

Courtesy of PORSCHE CARS NORTH AMERICA, INC.

3. 3.3. Remove the resonance tube to the rear.

4. Clean the inside of the resonance tube (oil film) with a clean, lint-free cloth.

    1. 4.1. Pay close attention to the tuning flap on the 3.8-litre engine.

    2. 4.2. Clean the inside of the connection faces on the intake-air distributor.

WM 247419 REMOVING AND INSTALLING RESONANCE TUBE (EXCEPT CARRERA "EDITION", CARRERA CABRIOLET "EDITION", TURBO S, CARRERA 4 "EDITION", TURBO CABRIO, TURBO S CABRIO, CARRERA 4 CABRIOLET "EDITION", GT3, GT3 RS) > INSTALLING RESONANCE TUBE

1. Pre-position resonance tube between intake-air distributors.

    1. 1.1. On the 3.8-litre engine connect a vacuum line and a cable plug onto the control valve of the tuning flap.

2. Fit rubber sleeves on both sides.

    1. 2.1. Lightly spray resonance tube and intake distributors at the seat of the rubber sleeve with silicone spray.

    2. 2.2. Position rubber sleeves on the upper side between the resonance tube and the intake-air distributor with the stop bead.

    3. 2.3. To ensure that the rubber sleeves are seated correctly all around, pull them

through 360 degrees along the contour of the resonance tube.

> *IMPORTANT: The stop rib must be seated between the resonance tube and intake distributor.*

3. Insert lower clamp halves with the connecting hooks pointing in direction of travel and wedge them into the particular sleeve groove.

    1. 3.1. To do this, pull up the clamp half at the front and rear at the same time until it is seated automatically.

4. Engage the eye of the upper halves of the clamp **-1-** in the connecting hooks and fix in place at the rear (in direction of travel) using new M6 x 35 countersunk screws **-2-** .

Fig 1: Identifying Resonance Tube Mounting

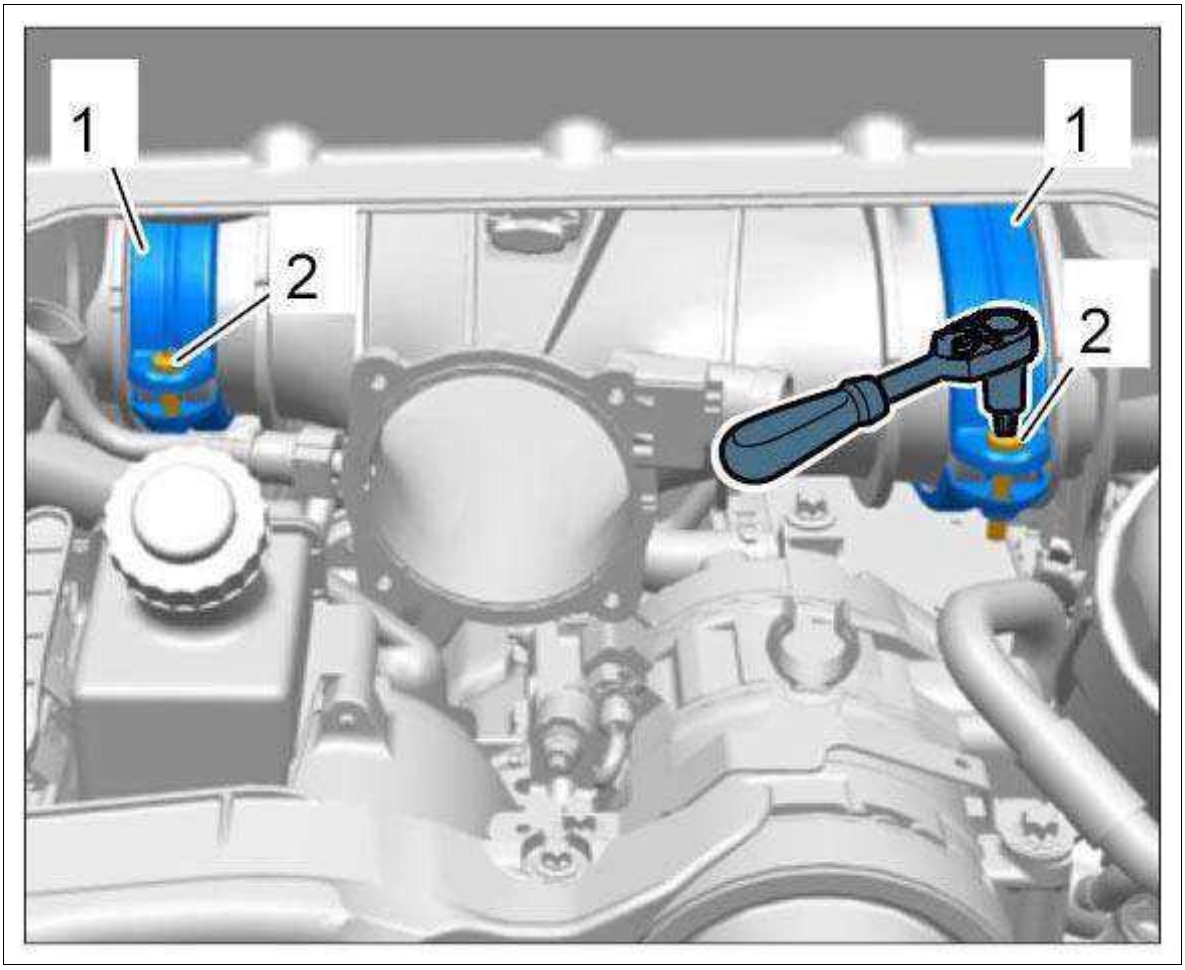

Courtesy of PORSCHE CARS NORTH AMERICA, INC.

5. Check that the resonance tube and rubber sleeves are seated correctly.

    1. 5.1. Tighten the screws.

6. Connect cable plug for pressure sensor **-1-** , positive crankcase ventilation lines **-2 + 4-** and tank vent connection **-2-** .

Fig 2: Identifying Pressure Sensor Cable Plug, Positive Crankcase Ventilation Lines And Tank Ventilation

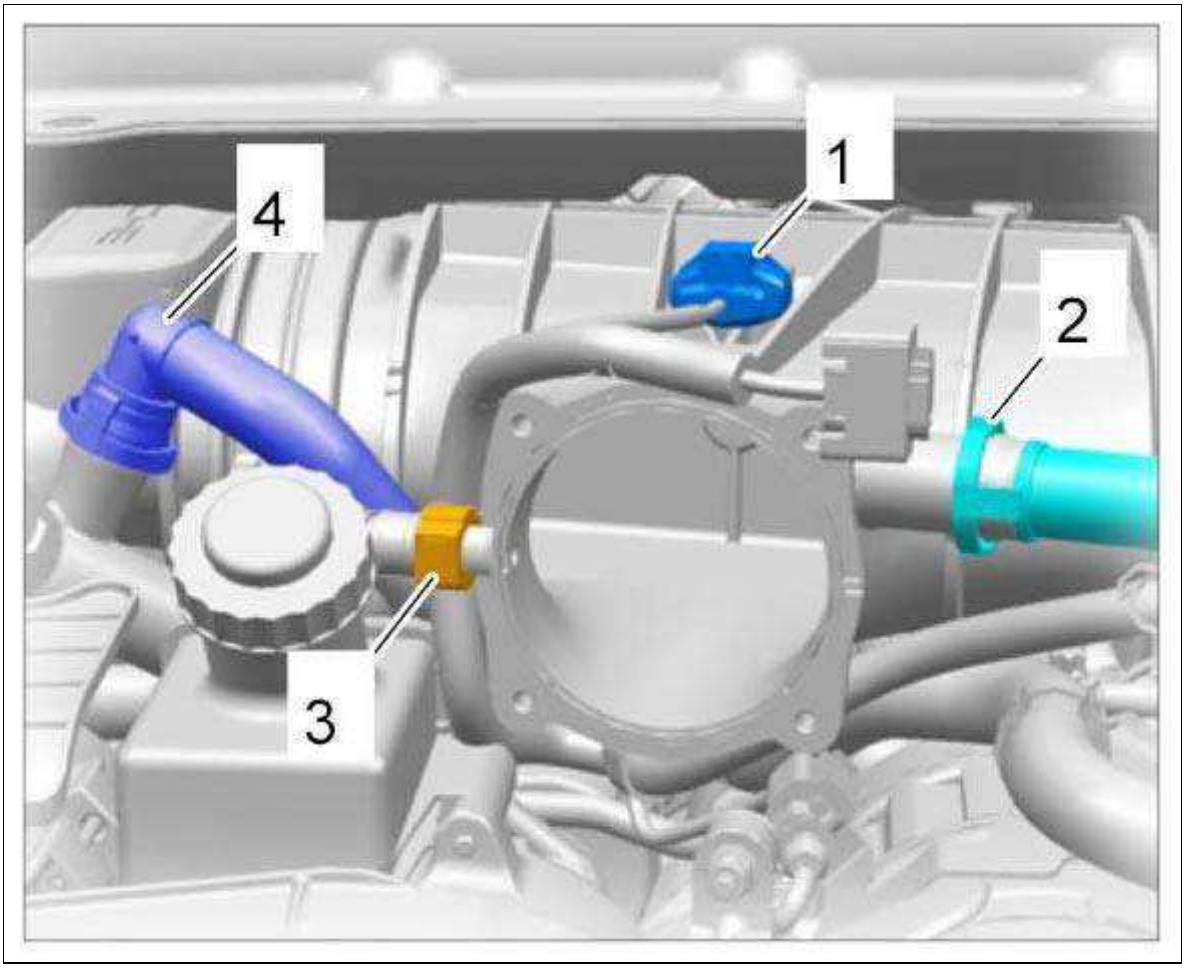

Courtesy of PORSCHE CARS NORTH AMERICA, INC.

WM 247419 REMOVING AND INSTALLING RESONANCE TUBE (EXCEPT CARRERA "EDITION", CARRERA CABRIOLET "EDITION", TURBO S, CARRERA 4 "EDITION", TURBO CABRIO, TURBO S CABRIO, CARRERA 4 CABRIOLET "EDITION", GT3, GT3 RS) > SUBSEQUENT WORK

WARNING: Danger of objects or loads falling down

- *Risk of squashing or crushing*

→ Secure components to prevent them from falling down.

1. Slowly raise the engine to installation position using the jack.

   → 100109 LOWERING THE ENGINE .

2. Secure engine carrier.

   → Installing Engine Carrier .

3. Secure cable duct to intake distributor side 1-3 using an M6 screw.
4. Install throttle housing.

   → 244219 REMOVING AND INSTALLING THROTTLE HOUSING .

5. Check for leaks at intake-air distributor.

   → 244601 CHECKING INTAKE-AIR DISTRIBUTOR FOR LEAKS .

6. Install air cleaner housing.

   → Installing Air Cleaner Housing .

WM 247419 REMOVING AND INSTALLING RESONANCE TUBE (X51) (CARRERA S, CARRERA GTS, CARR. S CABRIO, CARR. CABRIO, CARRERA 4S, CARRERA 4 GTS, TARGA 4S, TARGA 4 GTS, CARR. 4S CABRIO, CARR. 4 GTS CABRIO) > TECHNICAL VALUES

Location	Description	Type	Basic value	Tolerance 1	Tolerance 2
Holder to intake-air distributor and intake manifold (X51)	M6 screw	Tightening torque	10 Nm (7.5 ftlb.)		
Connecting holder for intake-air distributor/resonance tube (X51)	M6 screw	Tightening torque	6 Nm (4.5 ftlb.)	+1 Nm (+0.5 ftlb.)	
Throttle housing to resonance tube (X51)	Screw, M6 x 45	Tightening torque	10 Nm (7.5 ftlb.)		

WM 247419 REMOVING AND INSTALLING RESONANCE TUBE (X51) (CARRERA S, CARRERA GTS, CARR. S CABRIO, CARR. CABRIO, CARRERA 4S, CARRERA 4 GTS, TARGA 4S, TARGA 4 GTS, CARR. 4S CABRIO, CARR. 4 GTS CABRIO) > PRELIMINARY WORK

WARNING: Danger of objects or loads falling down

- *Risk of squashing or crushing*

→ Secure components to prevent them from falling down.

Information

- It may only be supported over a large area at the oil pan.
- Localized loading is not permitted.

1. Remove intake-air distributor for bank 1-3.

→ 244619 REMOVING AND INSTALLING INTAKE-AIR DISTRIBUTOR (X51) .

2. Disconnect cable plug for throttle housing **-1-** and intake manifold pressure sensor **-2-** .

Fig 1: Identifying Cable Plugs And Drive Belt Cover

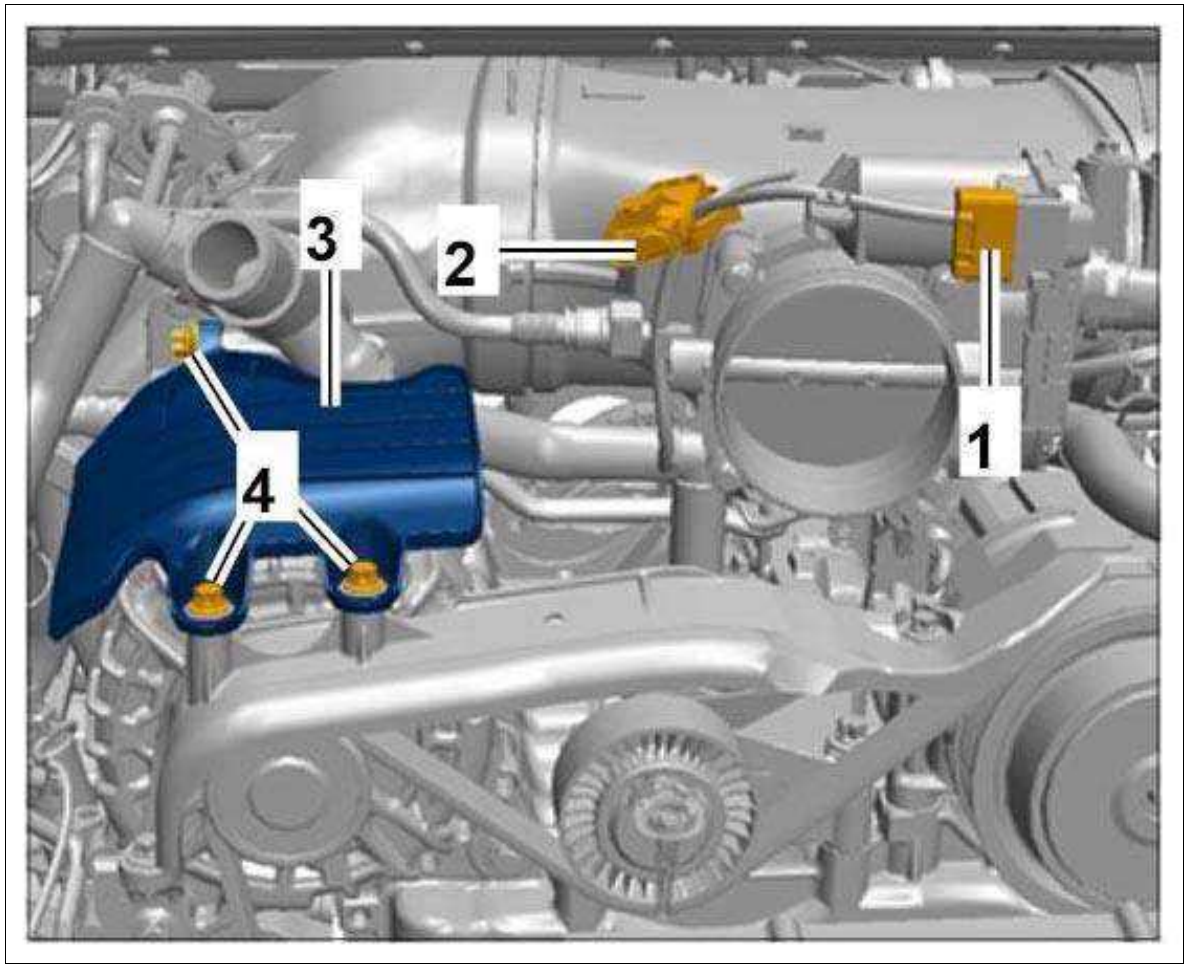

Courtesy of PORSCHE CARS NORTH AMERICA, INC.

3. Remove throttle housing **-1-** .

    1. 3.1. Unscrew screws (M6 x 45) **-2-** and remove throttle housing.
    2. 3.2. Replace seal.

Fig 2: Identifying Throttle Housing And Vent Lines

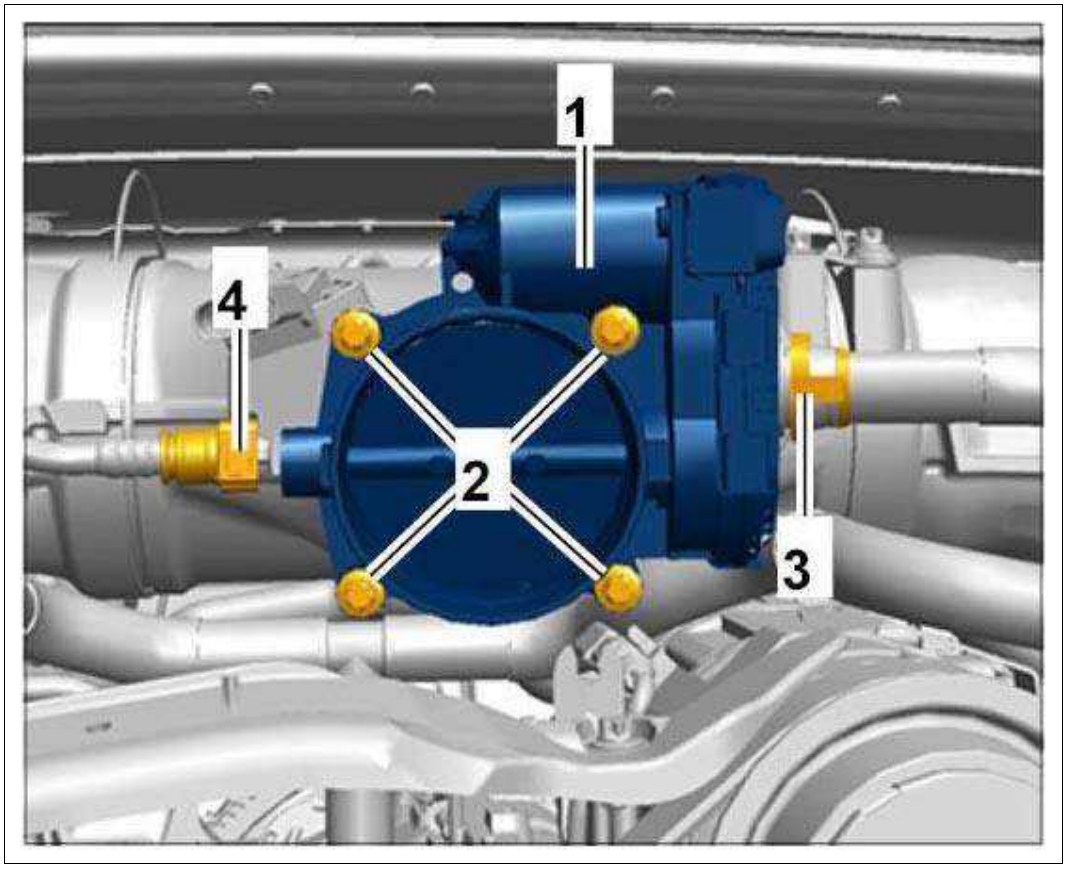

Courtesy of PORSCHE CARS NORTH AMERICA, INC.

WM 247419 REMOVING AND INSTALLING RESONANCE TUBE (X51) (CARRERA S, CARRERA GTS, CARR. S CABRIO, CARR. CABRIO, CARRERA 4S, CARRERA 4 GTS, TARGA 4S, TARGA 4 GTS, CARR. 4S CABRIO, CARR. 4 GTS CABRIO) > REMOVING RESONANCE TUBE

1. Loosen connecting holder between the intake-air distributor and right resonance tube and positive crankcase ventilation line.

    1. 1.1. Unscrew screws (M6 x 16 **-2-** and M6 x 12 **-3-**) and remove connecting holder **-1-** .

    2. 1.2. Disconnect positive crankcase ventilation line **-4-** .

Fig 1: Identifying Holder Between Intake-Air Distributor And Resonance Tube, Bank 4-6

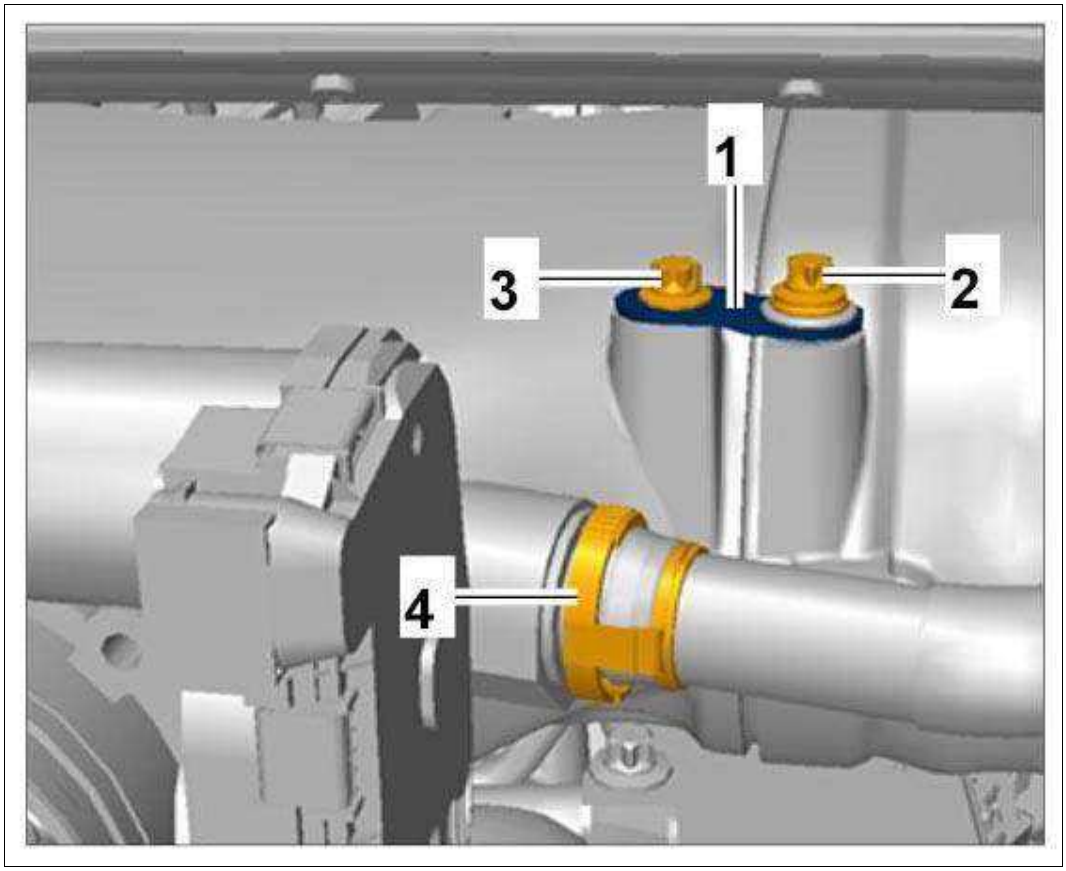

Courtesy of PORSCHE CARS NORTH AMERICA, INC.

2. Loosen holder **-1-** for control valves **-3-** and vacuum lines.

    1. 2.1. Unscrew screws **-2-** and press holder forward.
    2. 2.2. Disconnect vacuum lines from the connecting hoses.

Fig 2: Identifying Resonance Tube Control Valves Holder

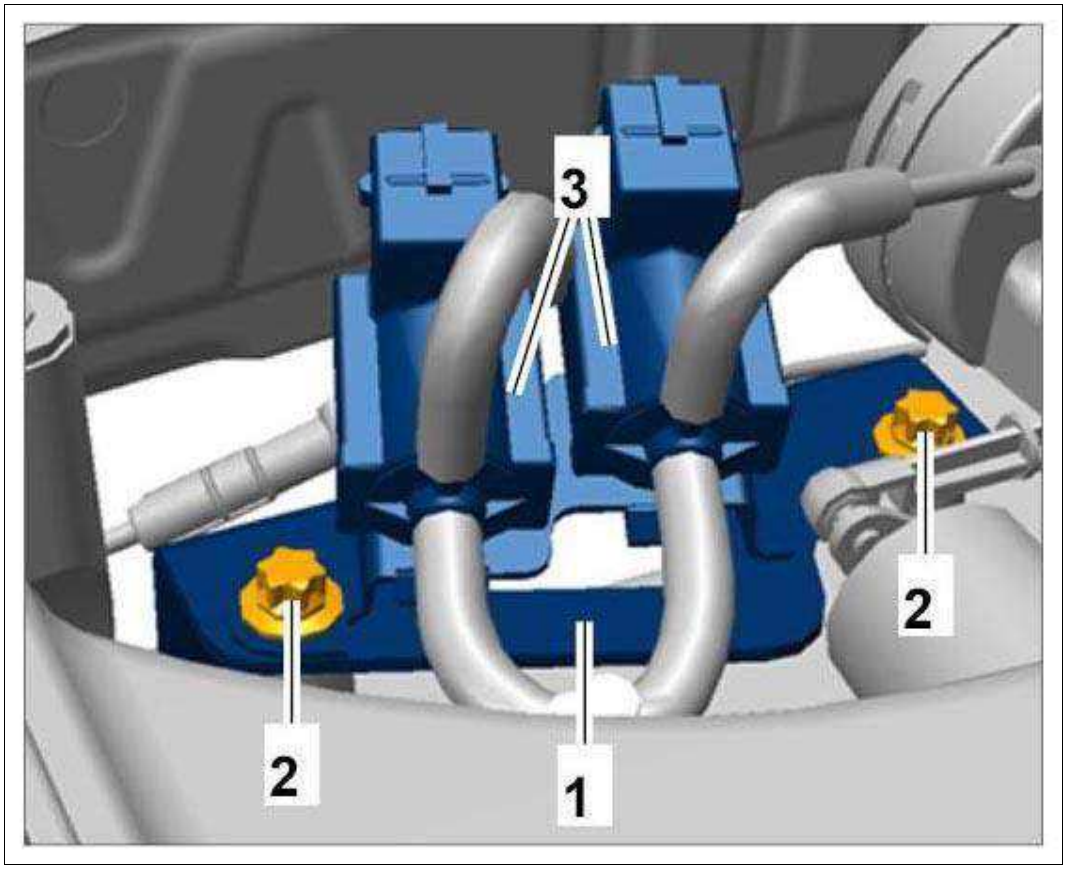

Courtesy of PORSCHE CARS NORTH AMERICA, INC.

3. Remove resonance tube.

    1. 3.1. Pull resonance tube **-1-** out of the intake-air distributor for bank 4-6.
    2. 3.2. Guide resonance tube to the rear and out of the engine compartment.

Fig 3: Pulling Resonance Tube With Seals

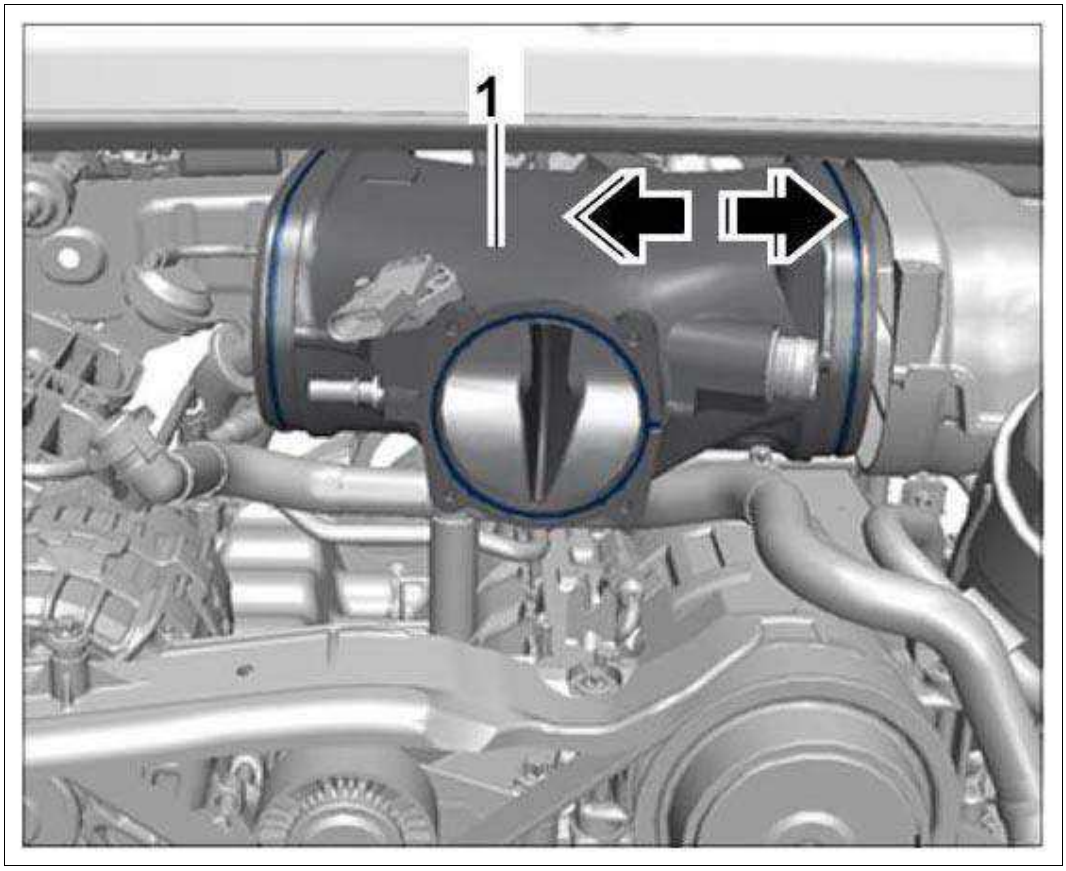

Courtesy of PORSCHE CARS NORTH AMERICA, INC.

4. Replace seals **-2 and 3-** .

Fig 4: Identifying Resonance Tube Seals

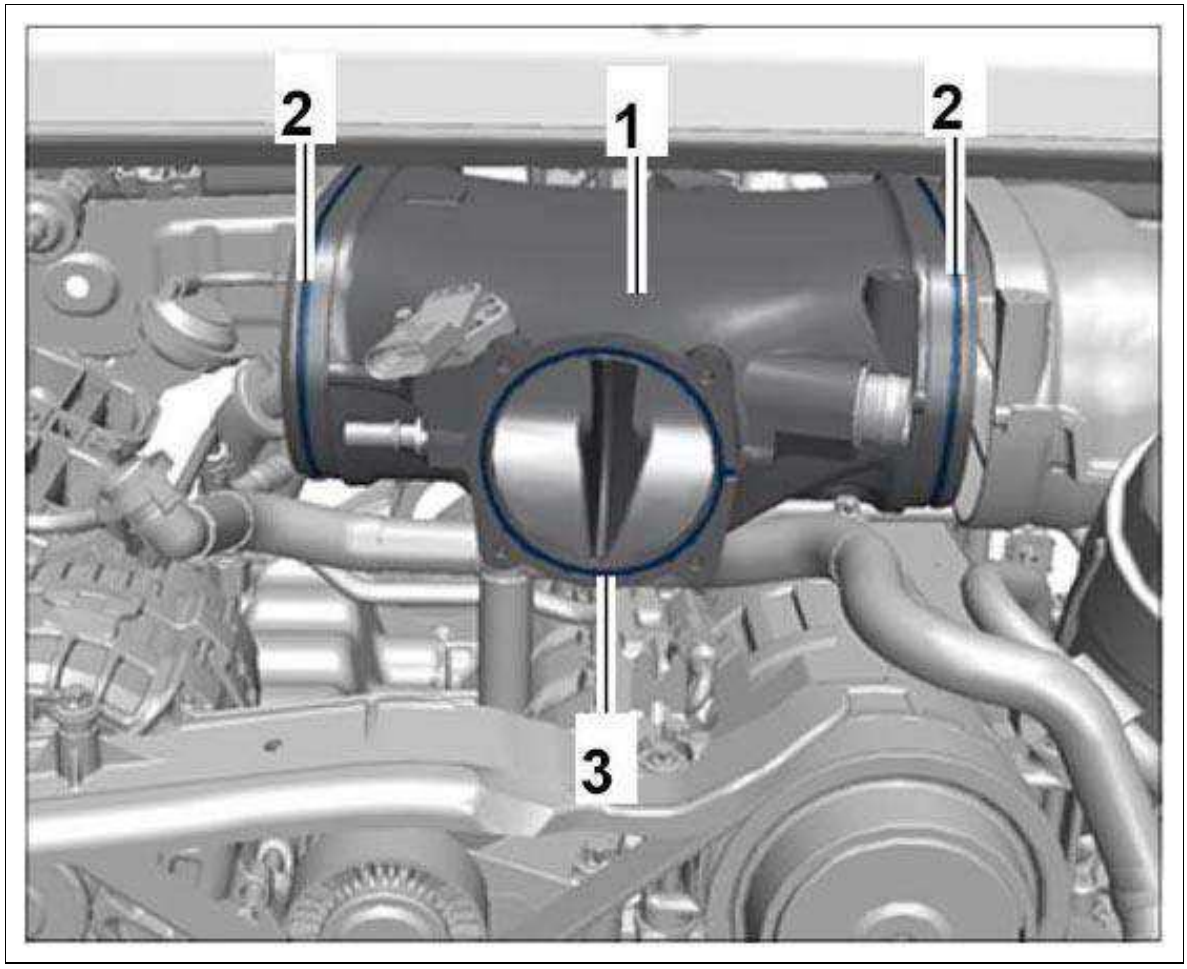

Courtesy of PORSCHE CARS NORTH AMERICA, INC.

WM 247419 REMOVING AND INSTALLING RESONANCE TUBE (X51) (CARRERA S, CARRERA GTS, CARR. S CABRIO, CARR. CABRIO, CARRERA 4S, CARRERA 4 GTS, TARGA 4S, TARGA 4 GTS, CARR. 4S CABRIO, CARR. 4 GTS CABRIO) > INSTALLING RESONANCE TUBE

1. Grease new seals with a light coating of Kluber Syntheso Glep.
2. Insert resonance tube **-1-** with new seals on the intake-air distributor on bank 4-6.

Fig 1: Pulling Resonance Tube With Seals

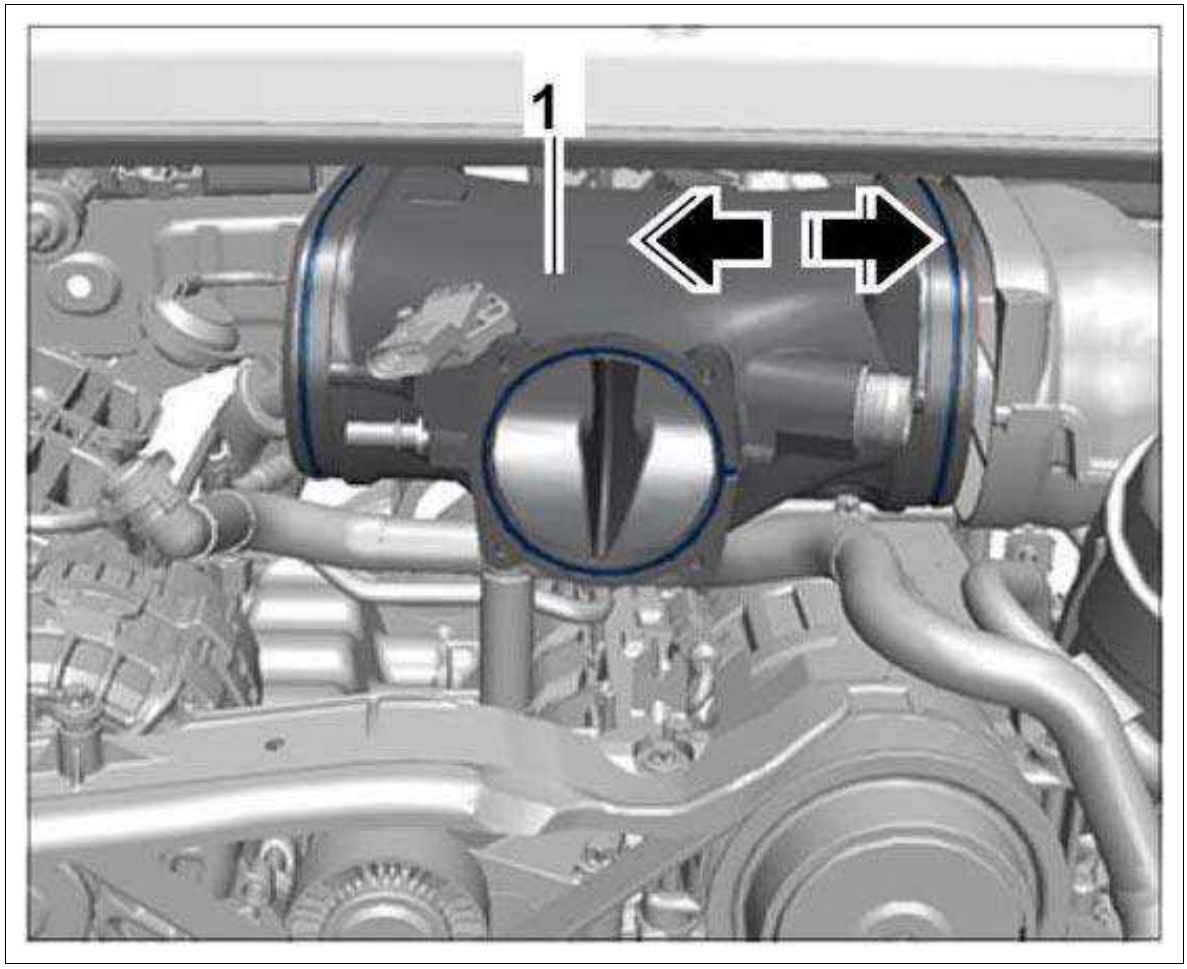

Courtesy of PORSCHE CARS NORTH AMERICA, INC.

3. Secure connecting holder **-1-** with screws (M6 x 16 **-2-** and M6 x 12 **-3-**), but do not tighten yet.

Fig 2: Identifying Holder Between Intake-Air Distributor And Resonance Tube, Bank 4-6

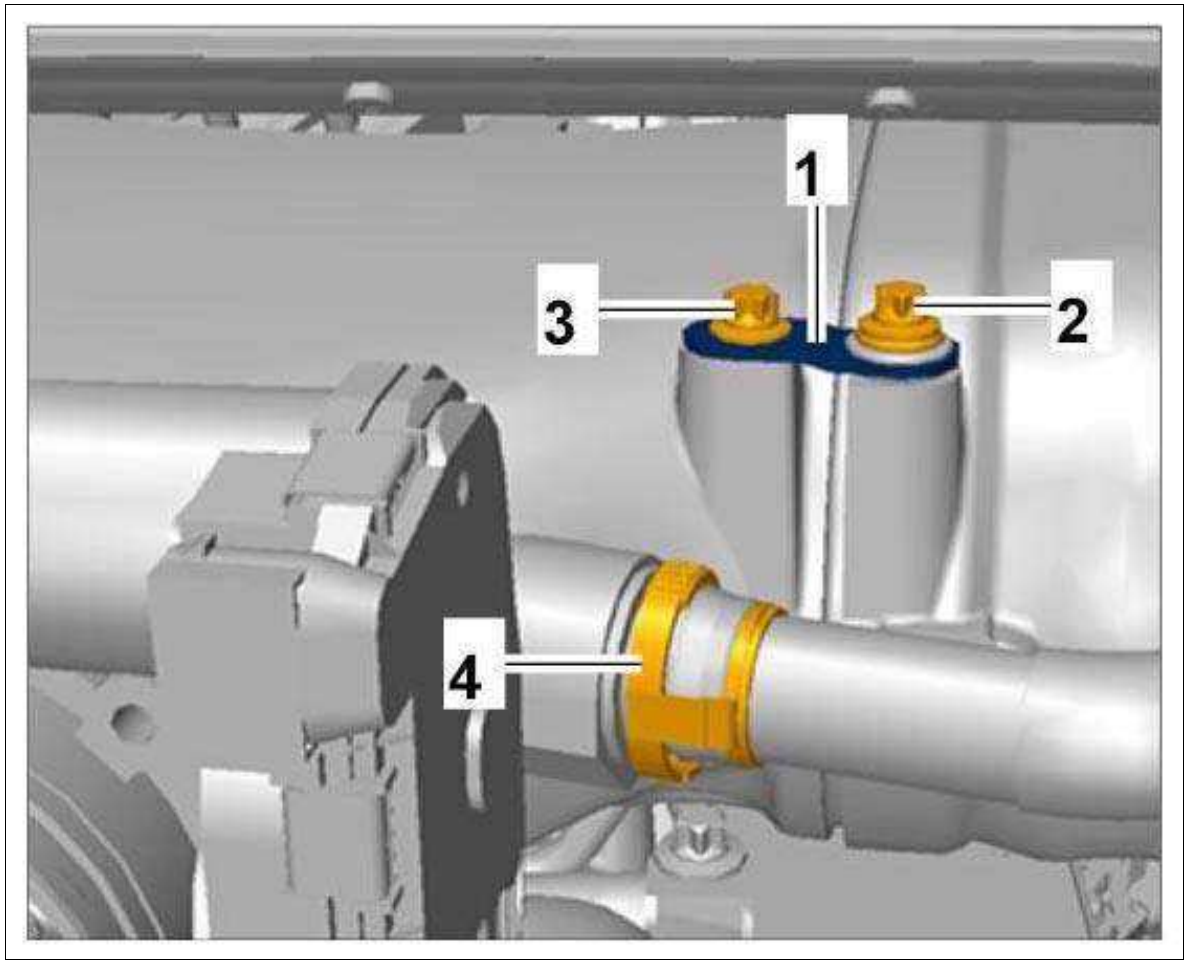

Courtesy of PORSCHE CARS NORTH AMERICA, INC.

4. Connect positive crankcase ventilation line.

5. Install holder **-1-** for control valves **-3-** .

    1. 5.1. Fit and tighten screws **-2-** .

    Tightening torque 10 Nm (7.5 ftlb.)

Fig 3: Identifying Resonance Tube Control Valves Holder

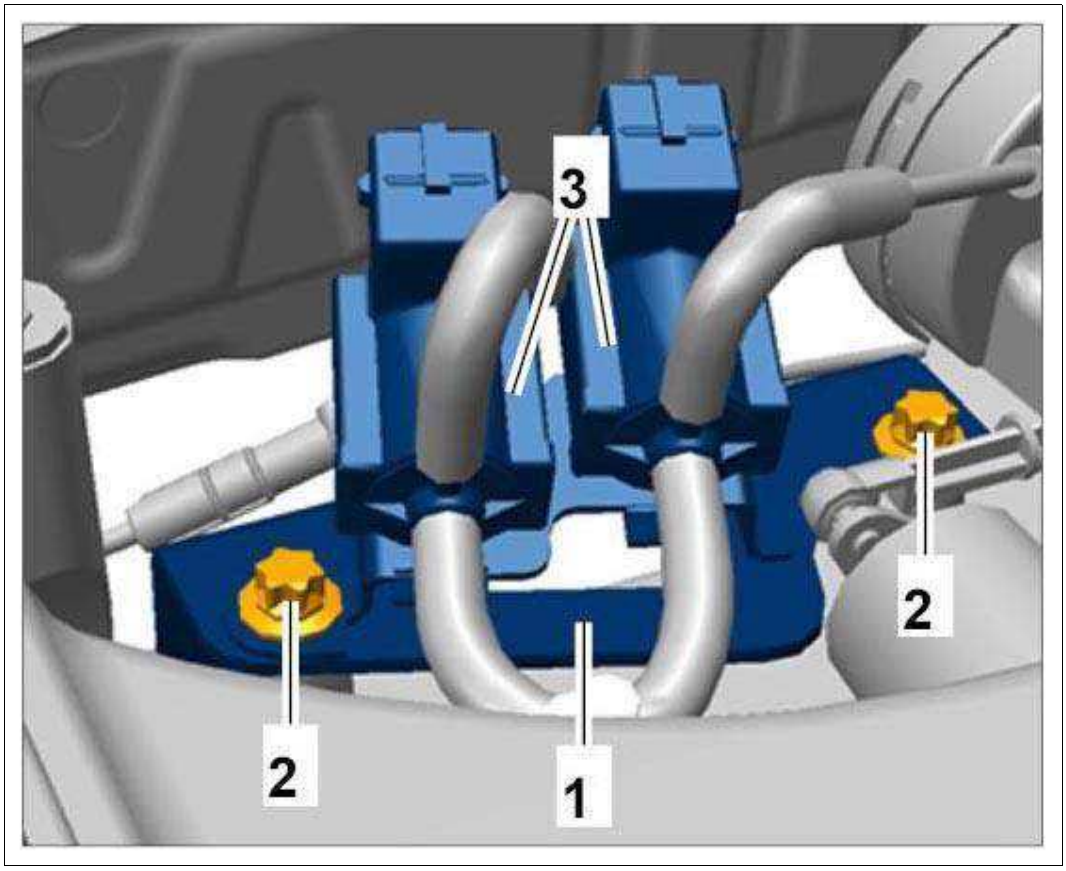

Courtesy of PORSCHE CARS NORTH AMERICA, INC.

WM 247419 REMOVING AND INSTALLING RESONANCE TUBE (X51) (CARRERA S, CARRERA GTS, CARR. S CABRIO, CARR. CABRIO, CARRERA 4S, CARRERA 4 GTS, TARGA 4S, TARGA 4 GTS, CARR. 4S CABRIO, CARR. 4 GTS CABRIO) > SUBSEQUENT WORK

1. Install intake-air distributor, bank 1-3.

   → 244619 REMOVING AND INSTALLING INTAKE-AIR DISTRIBUTOR (X51) .

2. Tighten screws on connecting holder for intake-air distributor on bank 4-6.

   Tightening torque 6 Nm (4.5 ftlb.) +1 Nm (+0.5 ftlb.)

3. Install throttle housing **-1-** .

   1. 3.1. Fit and tighten screws uniformly.

      Tightening torque 10 Nm (7.5 ftlb.)

Fig 1: Identifying Throttle Housing And Vent Lines

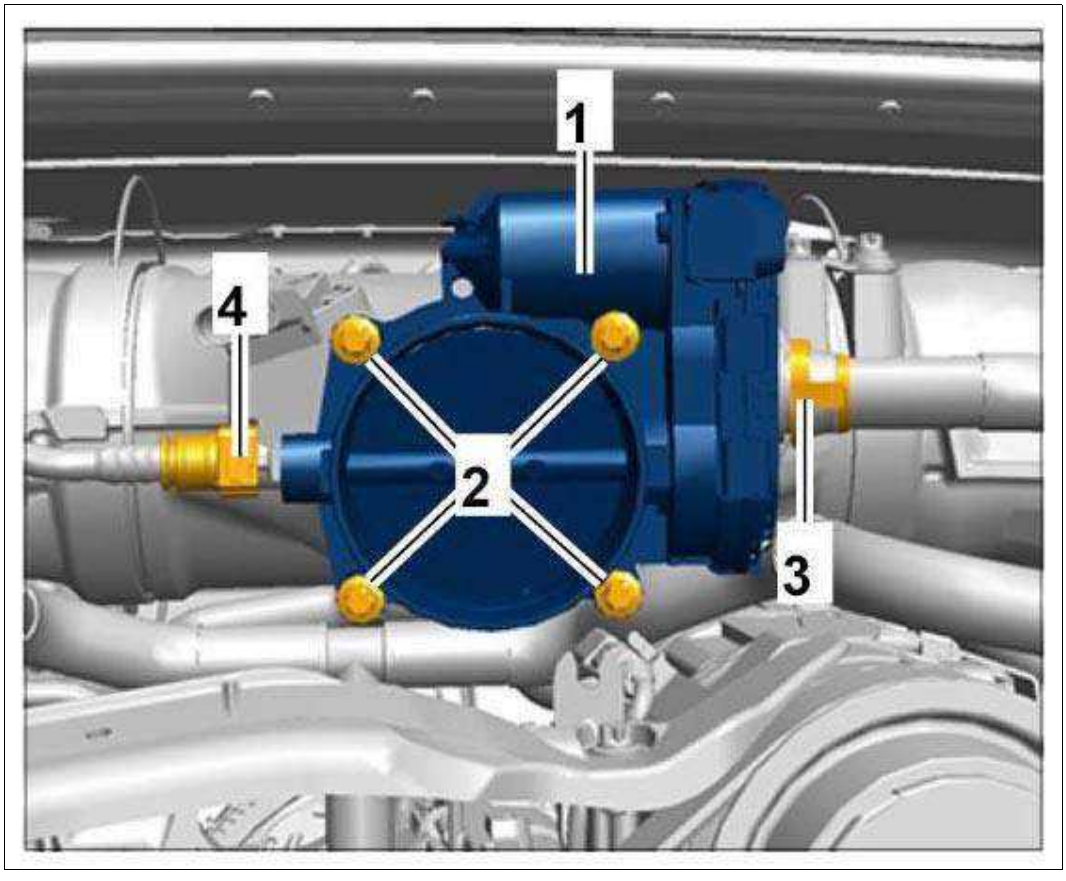

Courtesy of PORSCHE CARS NORTH AMERICA, INC.

4. Connect cable plugs on throttle housing and intake manifold pressure sensor and check that they are fitted securely.
5. Install air cleaner housing.

   → Installing Air Cleaner Housing .
6. Complete the vehicle.

WM 249019 REMOVING AND INSTALLING FUEL CONNECTION LINE (HIGH-PRESSURE SIDE) (EXCEPT CARRERA "EDITION", CARRERA CABRIOLET "EDITION", CARRERA 4 "EDITION", CARRERA 4 CABRIOLET "EDITION", GT3, GT3 RS) > TECHNICAL VALUES

Location	Description	Type	Basic value	Tolerance 1	Tolerance 2
Union nut on connecting line for cylinder 1-3 and 4-6	M14 x 1.5 - coat thread and cone with OKS 1710	Tightening torque	20 Nm (15 ftlb.)		
Union nut securing	M14 x 1.5 - coat thread and cone	Tightening torque	20 Nm (15 ftlb.)		

high-pressure pump line to connecting line	with OKS 1710		
Holding clamp securing connecting line to sheetmetal bracket	External Torx screw, M6 x 12	Tightening torque	10 Nm (7.5 ftlb.)

WM 249019 REMOVING AND INSTALLING FUEL CONNECTION LINE (HIGH-PRESSURE SIDE) (EXCEPT CARRERA "EDITION", CARRERA CABRIOLET "EDITION", CARRERA 4 "EDITION", CARRERA 4 CABRIOLET "EDITION", GT3, GT3 RS) > PRELIMINARY WORK

WARNING: Highly inflammable or explosive materials

- *Danger of fire or explosion*

→ Avoid contact with hot parts or sources of ignition.

→ Use suction to remove ignitable vapors.

→ Attach warning sign in a clearly visible position.

WARNING: Caustic fluids

- *Danger of chemical burns*

→ Avoid contact with caustic fluid.

→ Wear personal protective gear.

→ Ensure that there is good ventilation.

→ If you do come into contact, wash off immediately with plenty of warm water and contact a doctor if necessary.

1. Observe safety instructions when working on the fuel system.
2. **Set up a warning sign -1- in a clearly visible position or attach it to the vehicle!**

Fig 1: Caution For Warning Sign When Working On Fuel System

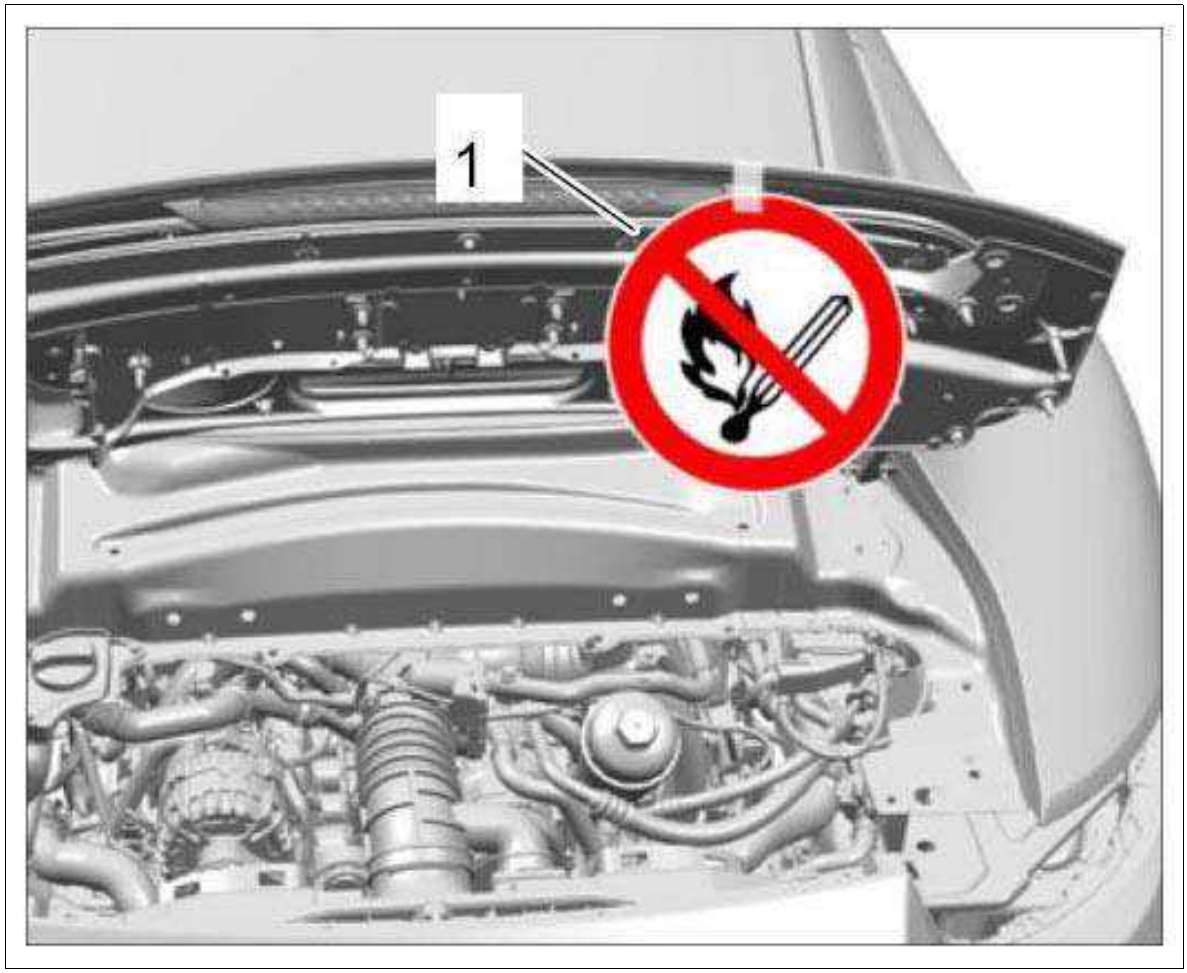

Courtesy of PORSCHE CARS NORTH AMERICA, INC.

3. Relieve fuel pressure in the system.

    1. 3.1. Remove cover on the fuse carrier in the passenger compartment at the front left.
    2. 3.2. In **row B -1-** , pull out the (20-amp) fuse **-2-** for the fuel pump.
    3. 3.3. Start the engine, wait until it stops and then re-insert the fuse.

Fig 2: Identifying Fuse Carrier In Passenger Compartment (Front Left)

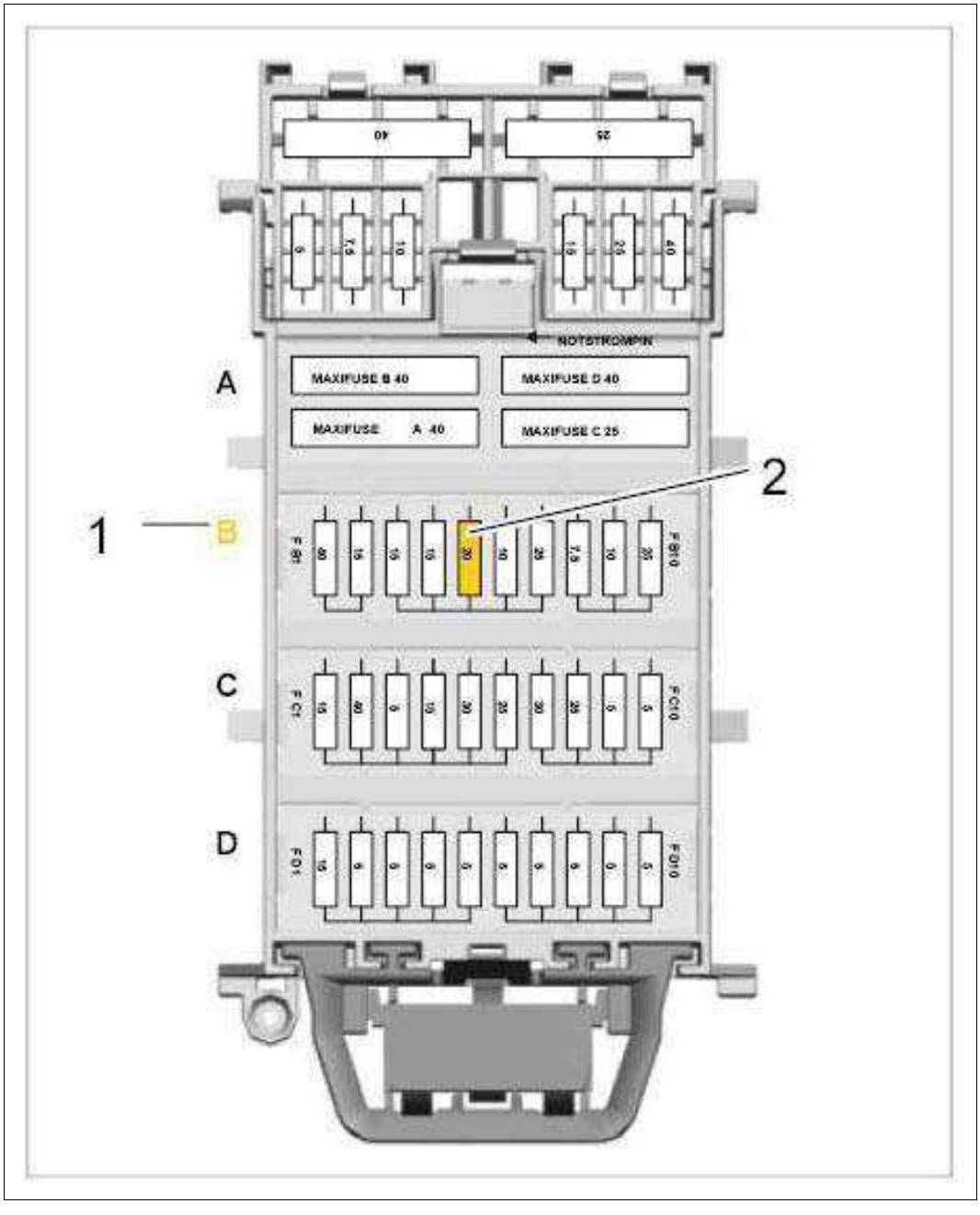

Courtesy of PORSCHE CARS NORTH AMERICA, INC.

4. Remove air cleaner housing.

   → 242519 REMOVING AND INSTALLING AIR CLEANER HOUSING .

5. Remove resonance tube.

   → 247419 REMOVING AND INSTALLING RESONANCE TUBE .

6. Remove intake-air distributor, side 4-6.

   → 244619 REMOVING AND INSTALLING INTAKE-AIR DISTRIBUTOR .

7. Open fuel low-pressure connection **-1-** at the left-hand side of the engine compartment.

1. 7.1. Soak up any fuel that leaks out with a cloth.
2. 7.2. Press locking lug on the plug-in coupling **-arrow-** and pull the line apart.

Fig 3: Locating Fuel Low-Pressure Line Connection

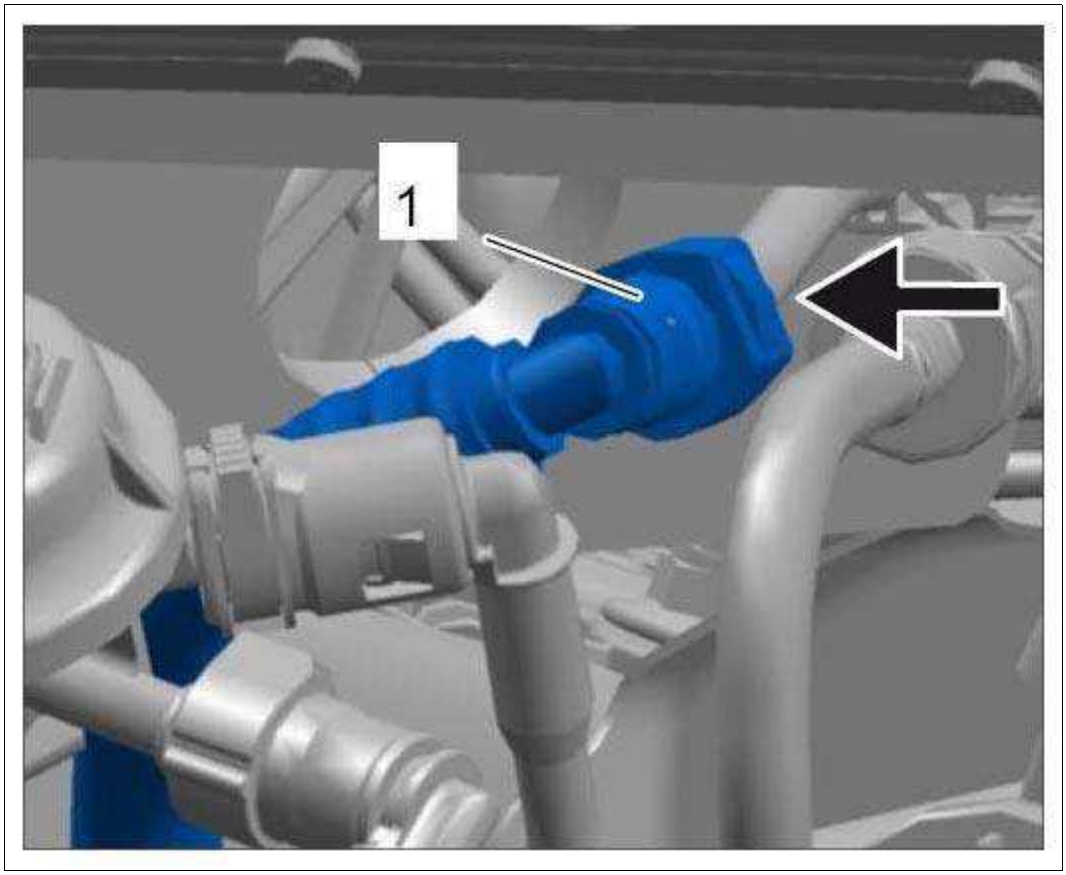

Courtesy of PORSCHE CARS NORTH AMERICA, INC.

WM 249019 REMOVING AND INSTALLING FUEL CONNECTION LINE (HIGH-PRESSURE SIDE) (EXCEPT CARRERA "EDITION", CARRERA CABRIOLET "EDITION", CARRERA 4 "EDITION", CARRERA 4 CABRIOLET "EDITION", GT3, GT3 RS) > REMOVING FUEL CONNECTION LINE

WARNING: Toxic substances

- *Danger of poisoning or suffocation*
- *Danger of burns to the eyes and skin*

→ Ventilate the work area well.

→ Never ingest or inhale.

→ Read specific information on the Hazard Sheet.

→ Do not smoke, eat or drink in the work area.

WARNING: Highly inflammable or explosive materials

- *Danger of fire or explosion*

→ Avoid contact with hot parts or sources of ignition.

→ Use suction to remove ignitable vapors.

→ Attach warning sign in a clearly visible position.

WARNING: Caustic fluids

- *Danger of chemical burns*

→ Avoid contact with caustic fluid.

→ Wear personal protective gear.

→ Ensure that there is good ventilation.

→ If you do come into contact, wash off immediately with plenty of warm water and contact a doctor if necessary.

1. Place several cloths under the fuel connections and rear coolant connection on the heat exchanger to soak up escaping fluids.
2. **Overview of installed fuel connection line** .

Fig 1: Installing Fuel Connection Line (Engine With PDCC Pump)

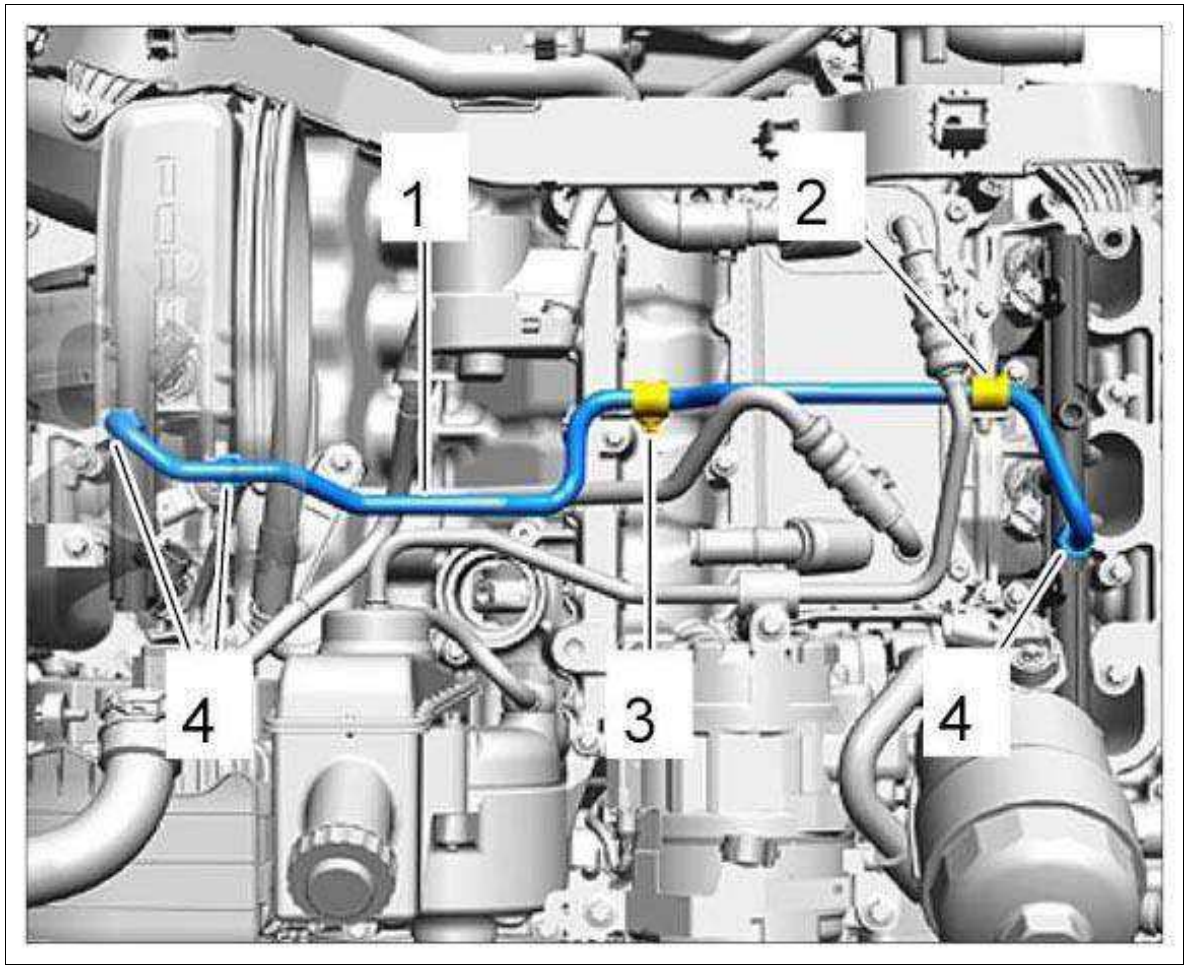

Courtesy of PORSCHE CARS NORTH AMERICA, INC.

1. Fuel connection line (high-pressure side)
2. Holding clamp on holder for cylinder head, side 4-6
3. Holding clamp on crankcase holder
4. Union nuts on fuel lines

3. Detach coolant hose from the rear heat exchanger.
    1. 3.1. Clamp off the coolant hose, open the spring band clamp and detach the hose.
4. Unscrew union nuts **-2-** on side 1-3 and holding clamp at the center.

Fig 2: Identifying Fuel Line Threaded Joint, Side 1-3

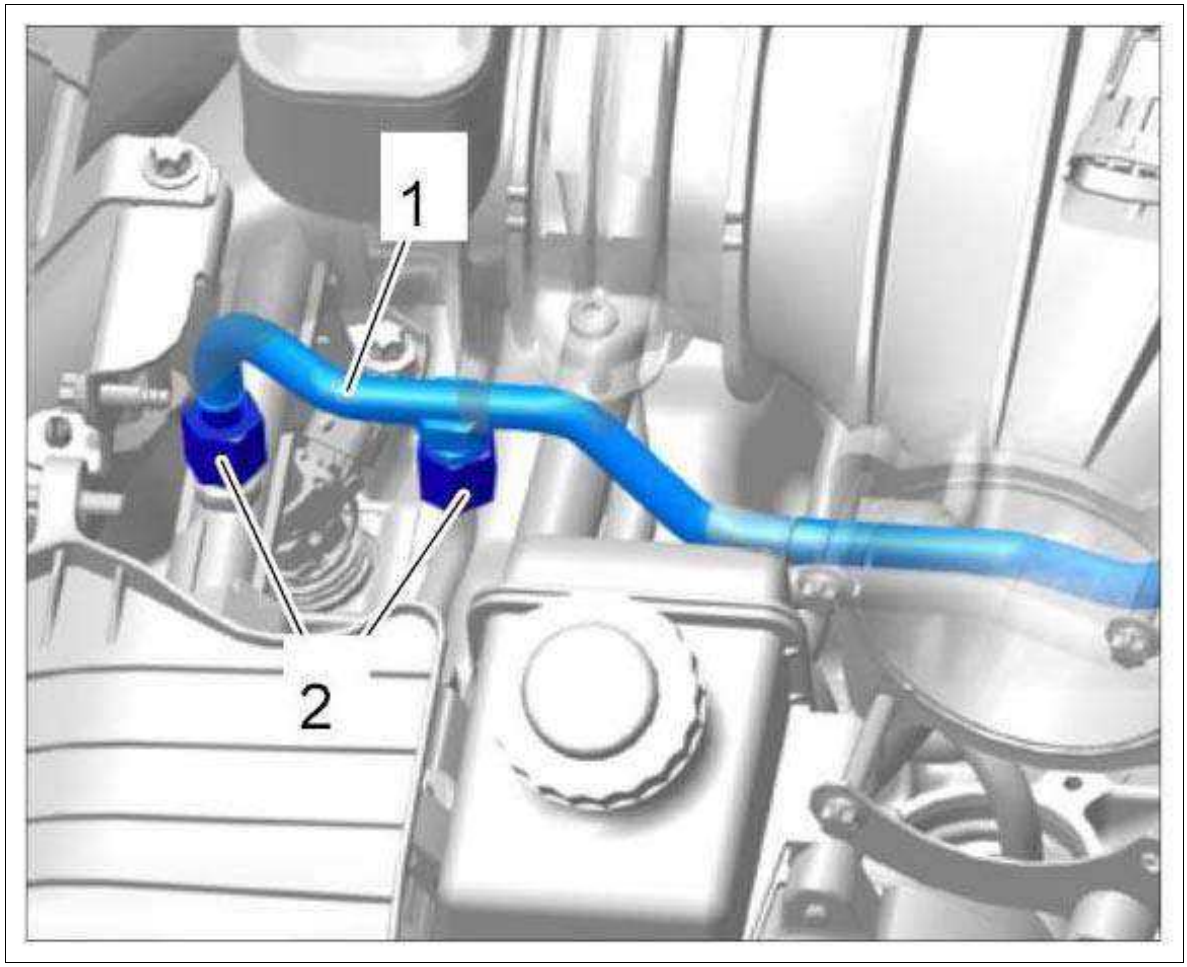

Courtesy of PORSCHE CARS NORTH AMERICA, INC.

5. Unscrew union nut **-3-** and holding clamp **-2-** on side 4-6.

Fig 3: Identifying Fuel Line Threaded Joint, Side 4-6

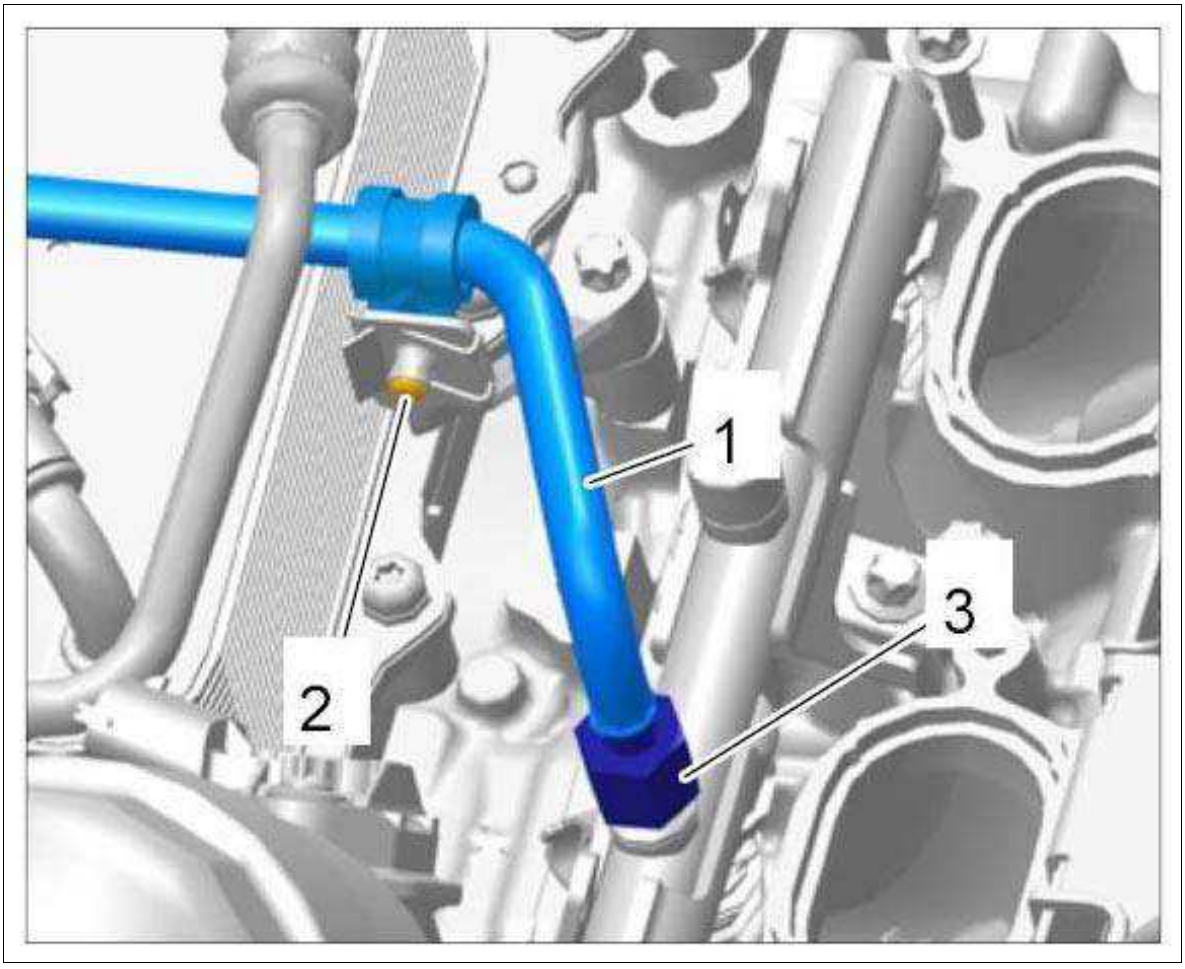

Courtesy of PORSCHE CARS NORTH AMERICA, INC.

6. Guide out fuel connection line.

Information

1. When the work is complete, check that all aids and foreign objects (e.g. cloths, tools) are removed from the engine compartment.

7. **Make sure there are no tools, foreign objects or aids in the engine compartment.**

WM 249019 REMOVING AND INSTALLING FUEL CONNECTION LINE (HIGH-PRESSURE SIDE) (EXCEPT CARRERA "EDITION", CARRERA CABRIOLET "EDITION", CARRERA 4 "EDITION", CARRERA 4 CABRIOLET "EDITION", GT3, GT3 RS) > INSTALLING FUEL CONNECTION LINE

WARNING: Highly inflammable or explosive materials

- *Danger of fire or explosion*

→ Avoid contact with hot parts or sources of ignition.

→ Use suction to remove ignitable vapors.

→ Attach warning sign in a clearly visible position.

> *WARNING: Caustic fluids*
>
> - *Danger of chemical burns*

→ Avoid contact with caustic fluid.

→ Wear personal protective gear.

→ Ensure that there is good ventilation.

→ If you do come into contact, wash off immediately with plenty of warm water and contact a doctor if necessary.

Information

- Always perform a leak test in the high-pressure area after opening the fuel system.
- This is particularly important if components are disassembled and replaced.
- The threaded connections of the fuel lines must be coated with OKS 1710 lubricant (Part No. 000.043.303.27) before being screwed back on again.
- Always allow a drying time of 60 minutes for the lubricant!
- Blow residual fuel out of the lines and high-pressure pump (into a fuel-resistant container or cloth) using compressed air before installation.
- The tightening specifications must be strictly observed.

  1. Coat union nuts, cone and thread of the fuel lines with OKS 1700 (Part No. 000.043.303.27).

     Allow a drying time of 60 minutes for the lubricant!

  2. Insert and secure the fuel line.

     Observe specified tightening sequence!

     1. 2.1. Tighten union nuts 2-3 turns by hand.
     2. 2.2. Fit and tighten screws on the holding clamps.

  3. Tighten union nuts according to the specified tightening sequence.

Fig 1: Fuel Connection Line Nuts Tightening Sequence

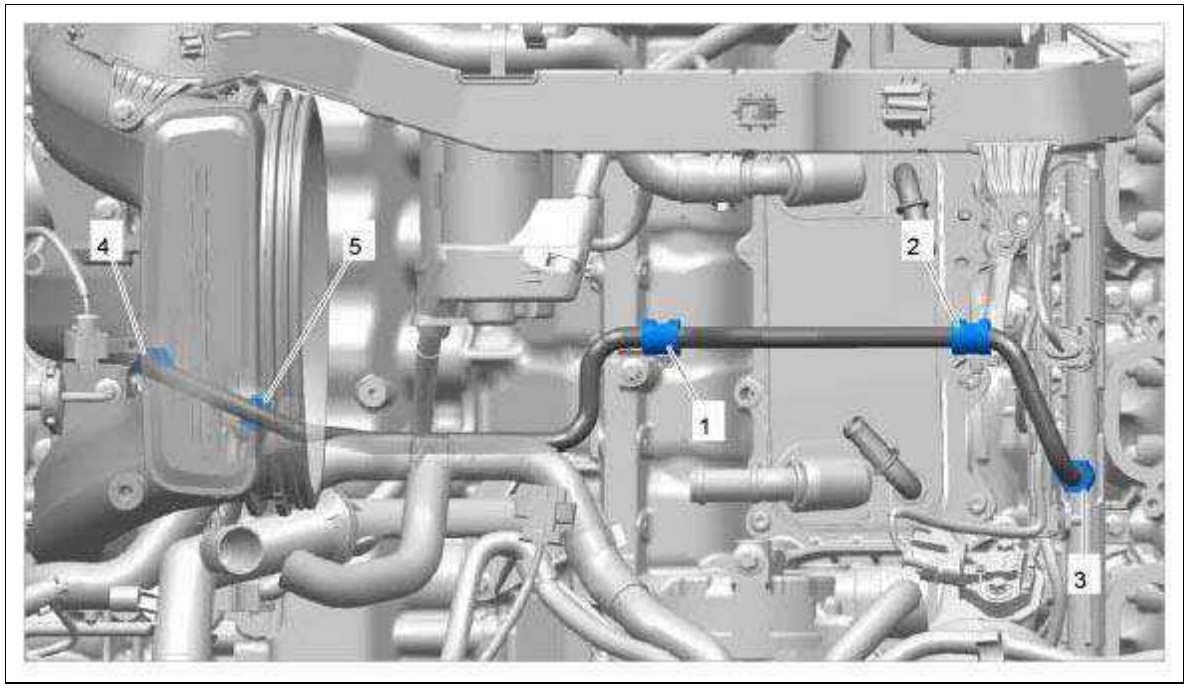

Courtesy of PORSCHE CARS NORTH AMERICA, INC.

1. Holding clamp at the center **Tightening torque 10 Nm (7.5 ftlb.)**
2. Tighten holding clamp on side 4-6 in the same way as the holding clamp at the center
3. Connection on side 4-6 **Tightening torque 20 Nm (15 ftlb.)**
4. Connection on side 1-3 same as side 4-6
5. Connection for line to high-pressure pump **Tightening torque 20 Nm (15 ftlb.)**

WM 249019 REMOVING AND INSTALLING FUEL CONNECTION LINE (HIGH-PRESSURE SIDE) (EXCEPT CARRERA "EDITION", CARRERA CABRIOLET "EDITION", CARRERA 4 "EDITION", CARRERA 4 CABRIOLET "EDITION", GT3, GT3 RS) > SUBSEQUENT WORK

1. Leak-test the fuel system.

   → 200101 CHECKING FUEL SYSTEM (HIGH-PRESSURE SIDE) FOR LEAKS .

2. Connect plug-in coupling for fuel low-pressure line.

   1. 2.1. Check that it is seated securely.

3. Install intake-air distributor, side 4-6.

   → Installing Intake-Air Distributor - Side 4-6 .

4. Install resonance tube.

   → Installing Resonance Tube .

5. Lift engine and secure in installation position.

   → 100109 LOWER THE ENGINE .

6. Install air cleaner housing.

   → Installing Air Cleaner Housing .

WM 249019 REMOVING AND INSTALLING FUEL LINE (HIGH-PRESSURE SIDE) (GT3, GT3 RS) > PRELIMINARY WORK

1. Remove intake-air distributor at the left or right.

   → 244619 REMOVING AND INSTALLING INTAKE-AIR DISTRIBUTOR .

WM 249019 REMOVING AND INSTALLING FUEL LINE (HIGH-PRESSURE SIDE) (GT3, GT3 RS) > REMOVING FUEL LINE

> *WARNING: Highly inflammable or explosive materials*
>
> - *Danger of fire or explosion*

→ Avoid contact with hot parts or sources of ignition.

→ Use suction to remove ignitable vapors.

→ Attach warning sign in a clearly visible position.

1. Place warning sign **-1-** in a clearly visible position or on the vehicle.

Fig 1: Caution For Warning Sign When Working On Fuel System

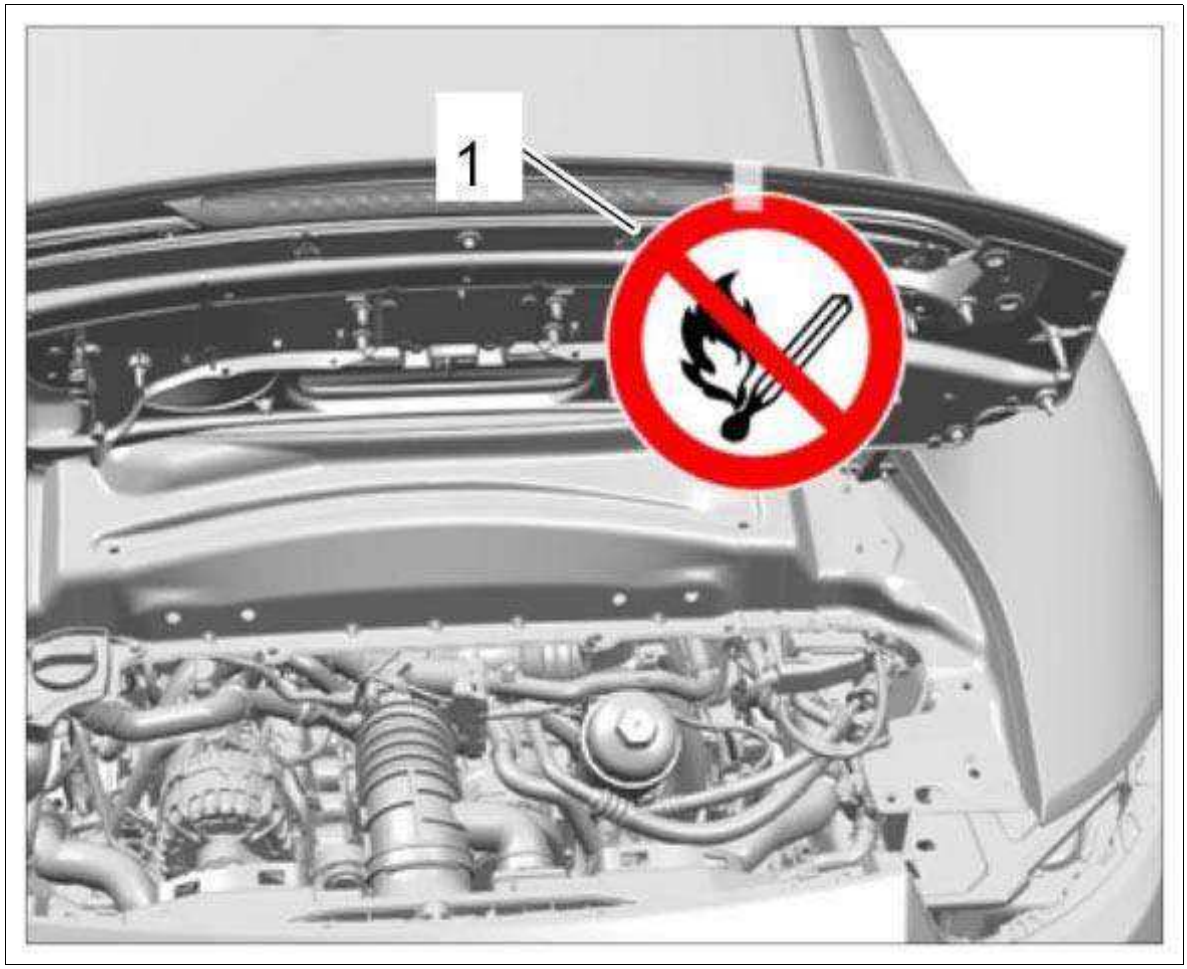

Courtesy of PORSCHE CARS NORTH AMERICA, INC.

2. Relieve fuel pressure in the system.

    1. 2.1. Remove cover on the fuse carrier in the passenger compartment at the front left.
    2. 2.2. In **row B -1-** , pull out the (20-amp) fuse **-2-** for the fuel pump.
    3. 2.3. Start the engine, wait until it stops and then re-insert the fuse.

Fig 2: Identifying Fuse Carrier In Passenger Compartment (Front Left)

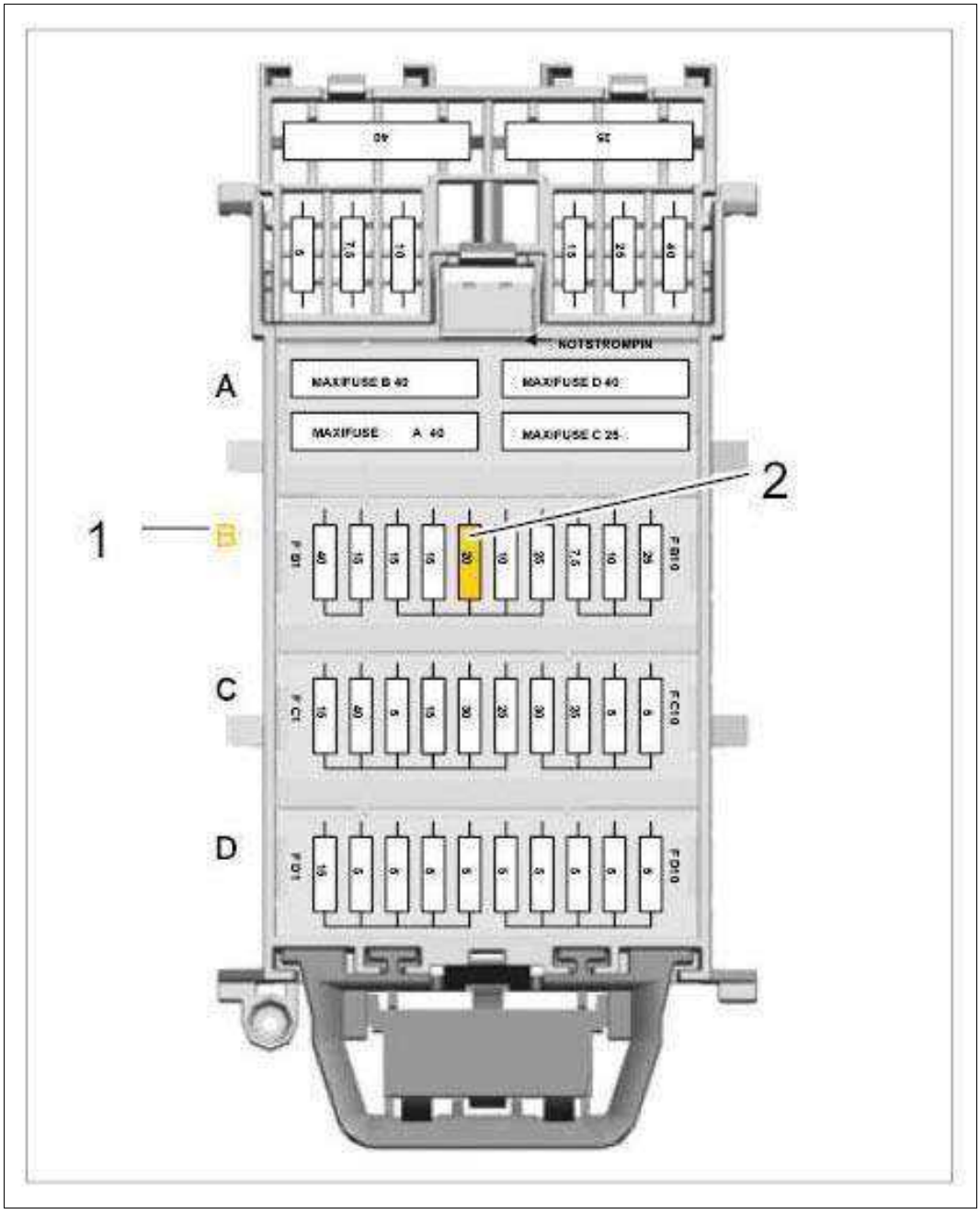

Courtesy of PORSCHE CARS NORTH AMERICA, INC.

Fuel lines on high-pressure side:

1. Left fuel line
2. Union nut - coat the thread and cone with OKS 1710
3. Holding clamp

Fig 3: Identifying Fuel Line Union Nut For Cylinder Bank 1-3

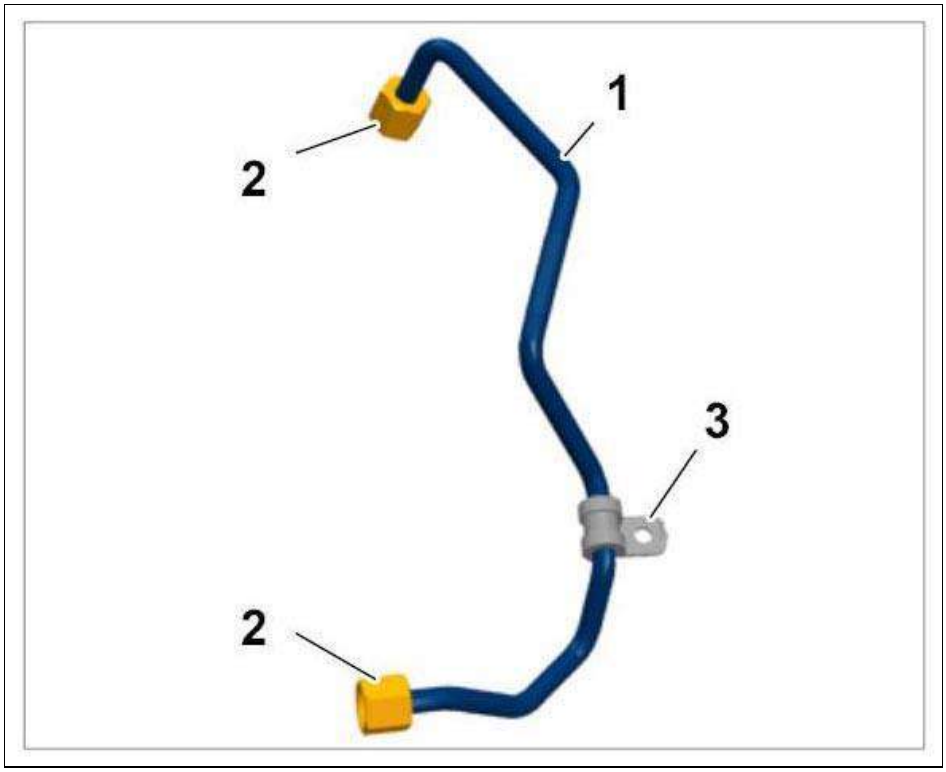

Courtesy of PORSCHE CARS NORTH AMERICA, INC.

1. Right fuel line
2. Union nut - coat the thread and cone with OKS 1710
3. Holding clamp

Fig 4: Identifying Fuel Line Union Nut For Cylinder Bank 4-6

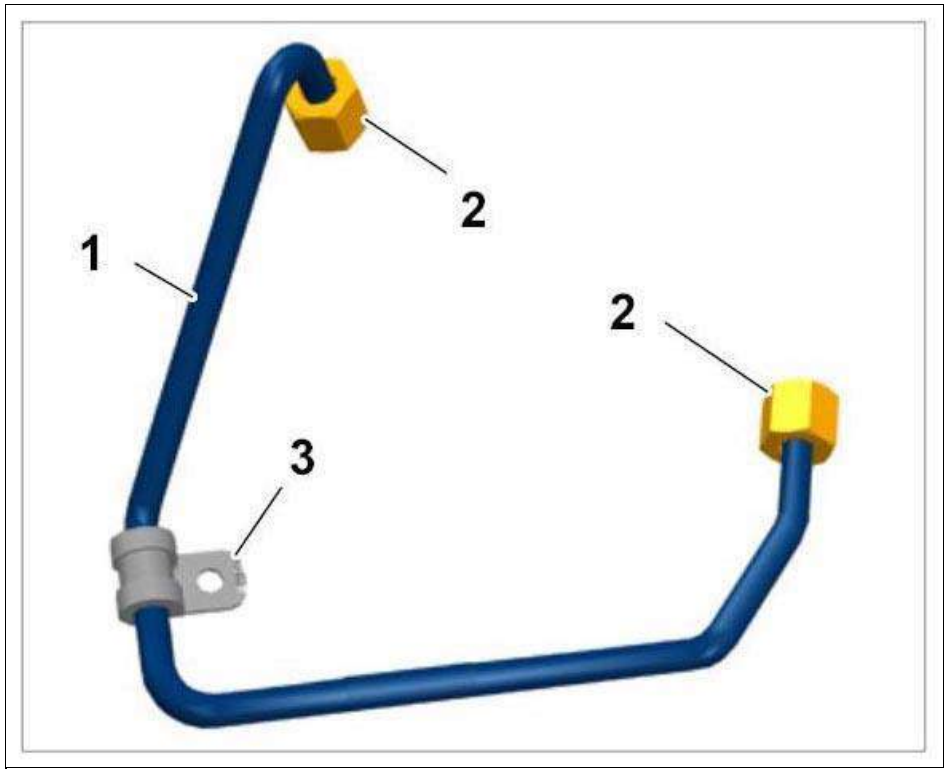

Courtesy of PORSCHE CARS NORTH AMERICA, INC.

3. Place cloths under the connections to absorb residual fuel.

4. Disconnect fuel line **-1-** for cylinder bank 1-3.

    1. 4.1. Unscrew union nuts (a/f 17) **-2-** on fuel collection pipe and high-pressure pump.

    2. 4.2. Unscrew M6 fastening screw **-3-** on the holding clamp.

    3. 4.3. Remove fuel line.

Fig 5: Identifying Fuel Line Connections On Cylinder Bank 1-3

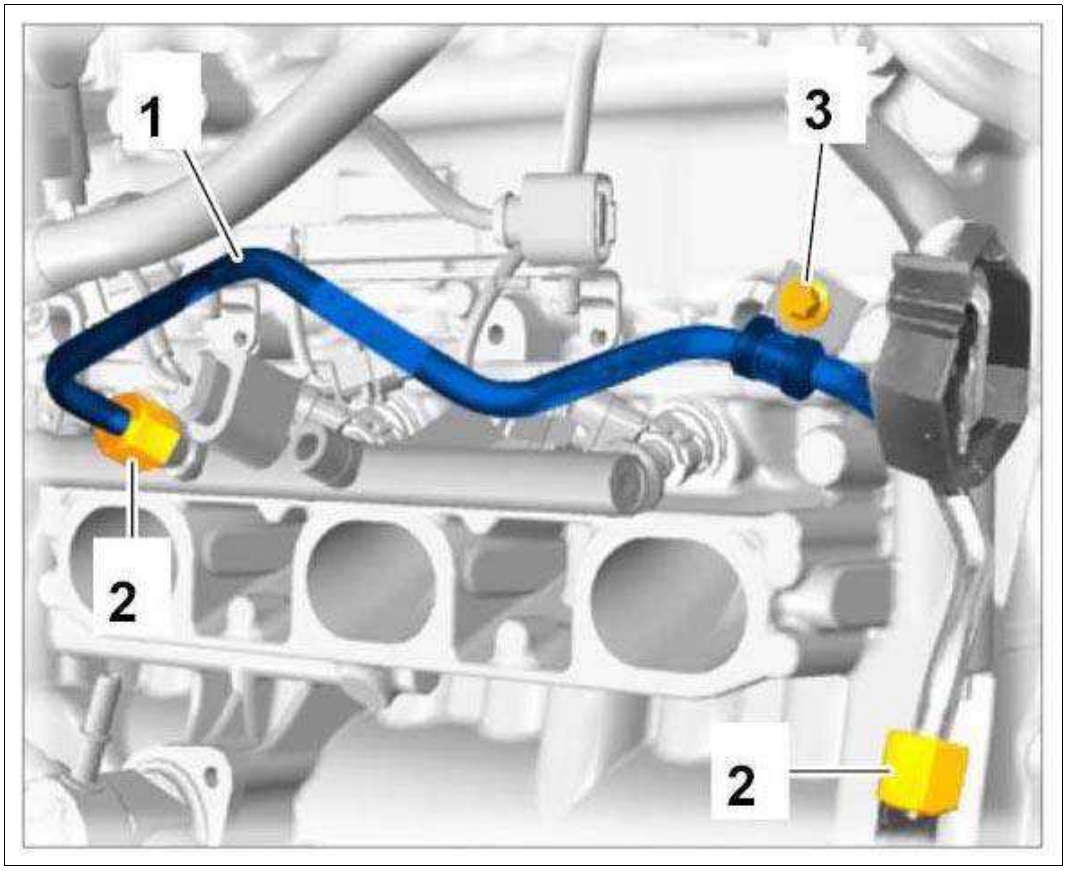

Courtesy of PORSCHE CARS NORTH AMERICA, INC.

5. Disconnect fuel line **-1-** for cylinder bank 4-6.

    1. 5.1. Unscrew union nuts (a/f 17) **-2-** on fuel collection pipe and high-pressure pump.
    2. 5.2. Unscrew M6 fastening screw **-3-** on the holding clamp.
    3. 5.3. Remove fuel line.

Fig 6: Identifying Fuel Line Connections On Cylinder Bank 4-6

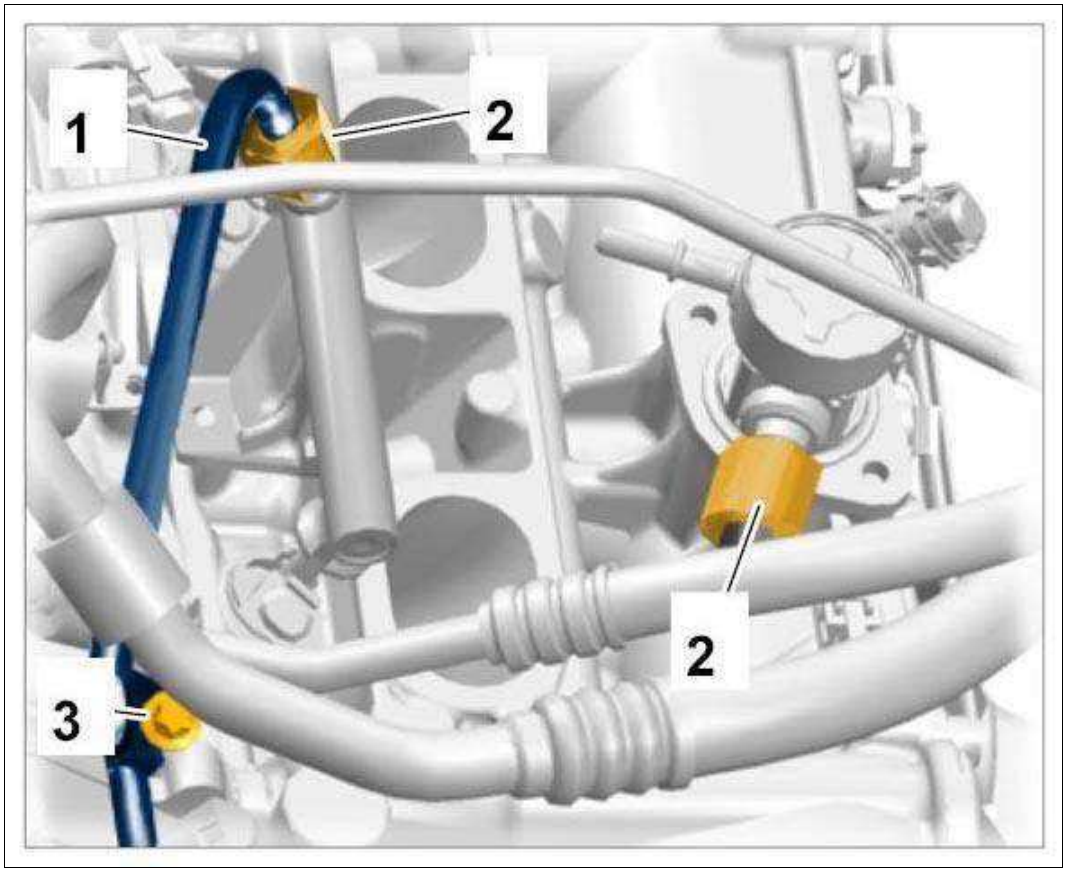

Courtesy of PORSCHE CARS NORTH AMERICA, INC.

Information

When the work is complete, check that all aids and foreign objects (e.g. cloths, tools) are removed from the engine compartment.

6. **Make sure there are no tools, foreign objects or aids in the engine compartment.**

WM 249019 REMOVING AND INSTALLING FUEL LINE (HIGH-PRESSURE SIDE) (GT3, GT3 RS) > INSTALLING FUEL LINE

1. Coat the thread of the union nuts and sealing cone on the fuel line with OKS 1701 before fitting it.

2. Insert and secure the fuel line.

    1. 2.1. Tighten union nuts 3 turns by hand.

    2. 2.2. Fit and tighten screw (M6 x 12) on the retaining clamp.

    3. 2.3. Tighten union nuts using the tool shown.

    Initial tightening:

        1. Torque wrench, 10 - 60 Nm (7.5 - 44 ftlb.)

        2. Socket-wrench insert, a/f 17 mm

Fig 1: Identifying Union Nuts And Recommended Tools

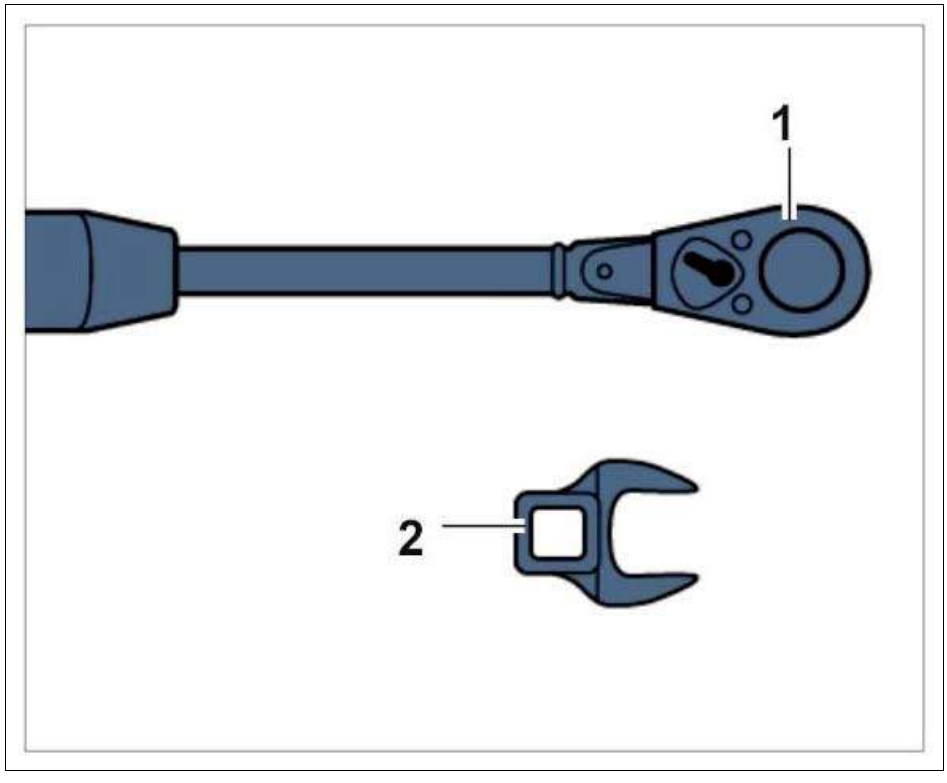

Courtesy of PORSCHE CARS NORTH AMERICA, INC.

WM 249019 REMOVING AND INSTALLING FUEL LINE (HIGH-PRESSURE SIDE) (GT3, GT3 RS) > SUBSEQUENT WORK

1. Install intake-air distributor.

   → Installing Intake-Air Distributor .

Service Manual: 28 - IGNITION SYSTEM -- 911 CARRERA (991)

WM 280419 REMOVING AND INSTALLING IGNITION STARTER SWITCH (EXCEPT CARRERA "EDITION", CARRERA CABRIOLET "EDITION", CARRERA 4 "EDITION", TARGA 4, TARGA 4S, TARGA 4 GTS, CARR. 4 CABRIO, CARR. 4S CABRIO, TURBO CABRIO, CARR. 4 GTS CABRIO, TURBO S CABRIO, CARRERA 4 CABRIOLET "EDITION") > TOOLS

Designation	Type	Number	Description
key	Special tool	9800	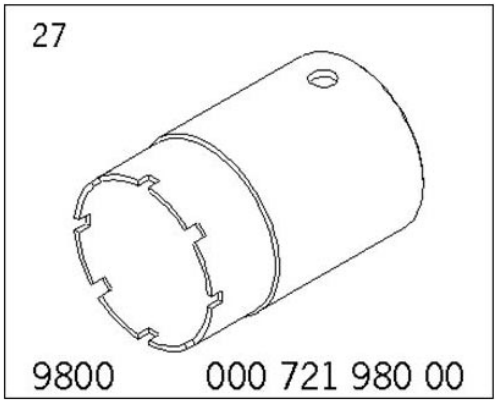

WM 280419 REMOVING AND INSTALLING IGNITION STARTER SWITCH (EXCEPT CARRERA "EDITION", CARRERA CABRIOLET "EDITION", CARRERA 4 "EDITION", TARGA 4, TARGA 4S, TARGA 4 GTS, CARR. 4 CABRIO, CARR. 4S CABRIO, TURBO CABRIO, CARR. 4 GTS CABRIO, TURBO S CABRIO, CARRERA 4 CABRIOLET "EDITION") > TECHNICAL VALUES

Location	Description	Type	Basic value	Tolerance 1	Tolerance 2
Union nut	1	Tightening torque	6 Nm (4.5 ftlb.)	+1 Nm (+0.5 ftlb.)	-0.5 Nm (-0.25 ftlb.)

WM 280419 REMOVING AND INSTALLING IGNITION STARTER SWITCH (EXCEPT CARRERA "EDITION", CARRERA CABRIOLET "EDITION", CARRERA 4 "EDITION", TARGA 4, TARGA 4S, TARGA 4 GTS, CARR. 4 CABRIO, CARR. 4S CABRIO, TURBO CABRIO, CARR. 4 GTS CABRIO, TURBO S CABRIO, CARRERA 4 CABRIOLET "EDITION") > PRELIMINARY WORK

1. Disconnect battery ground strap. → 2X00IN WORK INSTRUCTIONS AFTER DISCONNECTING THE BATTERY

   Information

   1. The molding on the driver's side at the right must be removed and installed on right-hand drive vehicles.

2. Remove dashboard molding on driver's side (left). → REMOVING DASHBOARD MOLDING ON DRIVER'S SIDE -

3. Remove knee airbag on driver's side. → REMOVING KNEE AIRBAG ON DRIVER'S SIDE

WM 280419 REMOVING AND INSTALLING IGNITION STARTER SWITCH (EXCEPT CARRERA "EDITION", CARRERA CABRIOLET "EDITION", CARRERA 4 "EDITION", TARGA 4, TARGA 4S, TARGA 4 GTS, CARR. 4 CABRIO, CARR. 4S CABRIO, TURBO CABRIO, CARR. 4 GTS CABRIO, TURBO S CABRIO, CARRERA 4 CABRIOLET "EDITION") > COMPONENT INFORMATION

Fig 1: Identifying Ignition Starter Switch Installation Position

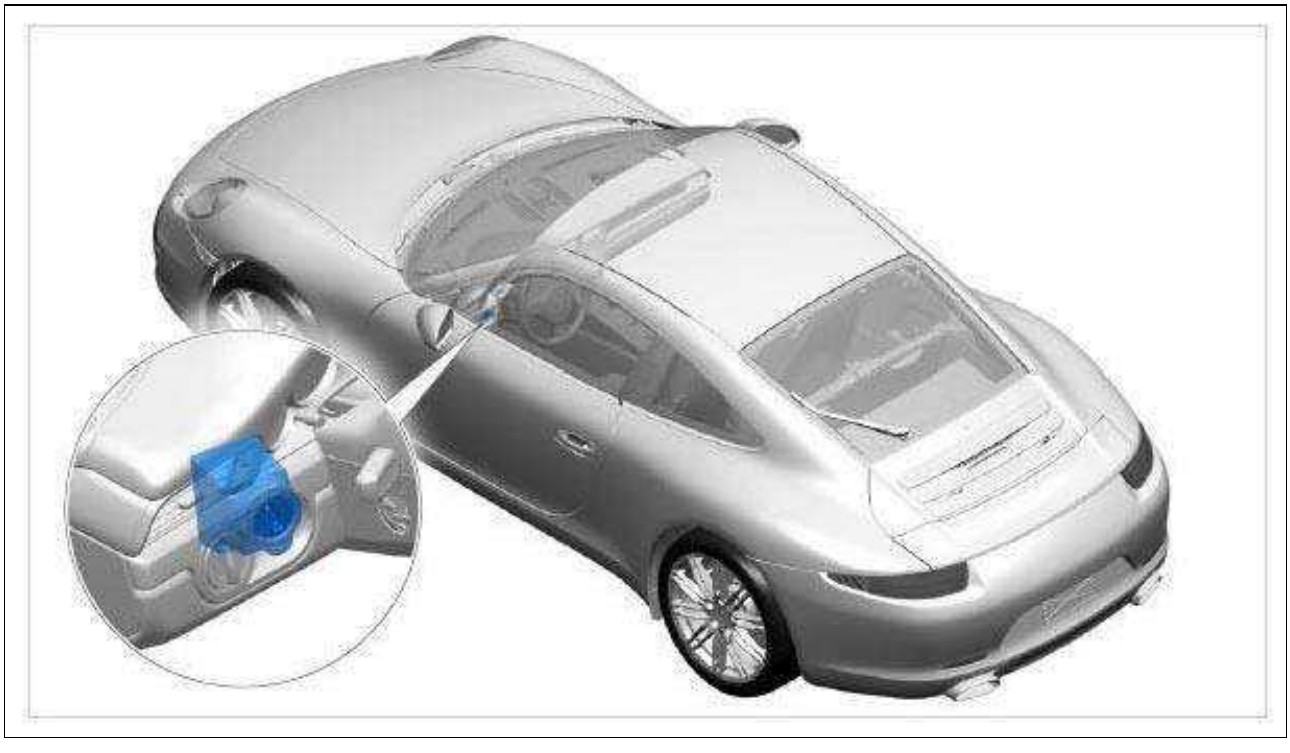

Courtesy of PORSCHE CARS NORTH AMERICA, INC.

WM 280419 REMOVING AND INSTALLING IGNITION STARTER SWITCH (EXCEPT CARRERA "EDITION", CARRERA CABRIOLET "EDITION", CARRERA 4 "EDITION", TARGA 4, TARGA 4S, TARGA 4 GTS, CARR. 4 CABRIO, CARR. 4S CABRIO, TURBO CABRIO, CARR. 4 GTS CABRIO, TURBO S CABRIO, CARRERA 4 CABRIOLET "EDITION") > REMOVING IGNITION STARTER SWITCH

1. Remove ignition starter switch.

    1. 1.1. Loosen union nut **-1-** using special tool **key 9800** (**-B-**) and unscrew from the ignition starter switch.

    2. 1.2. Press ignition starter switch inwards **-C-** and remove it in a downward direction.

Fig 1: Loosening Union Nut

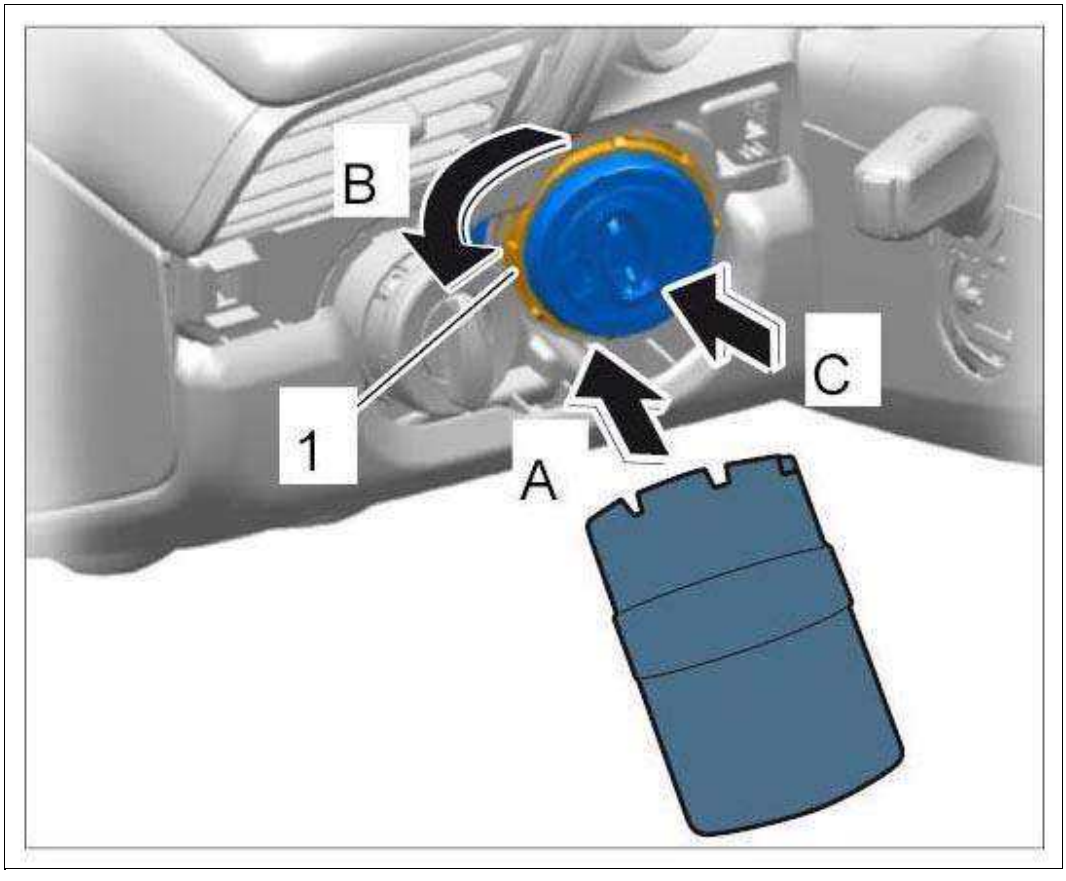

Courtesy of PORSCHE CARS NORTH AMERICA, INC.

2. Release electric plug connection **-a-** and pull it off the ignition starter switch **-arrow-** .

Fig 2: Disconnecting Plug Connection

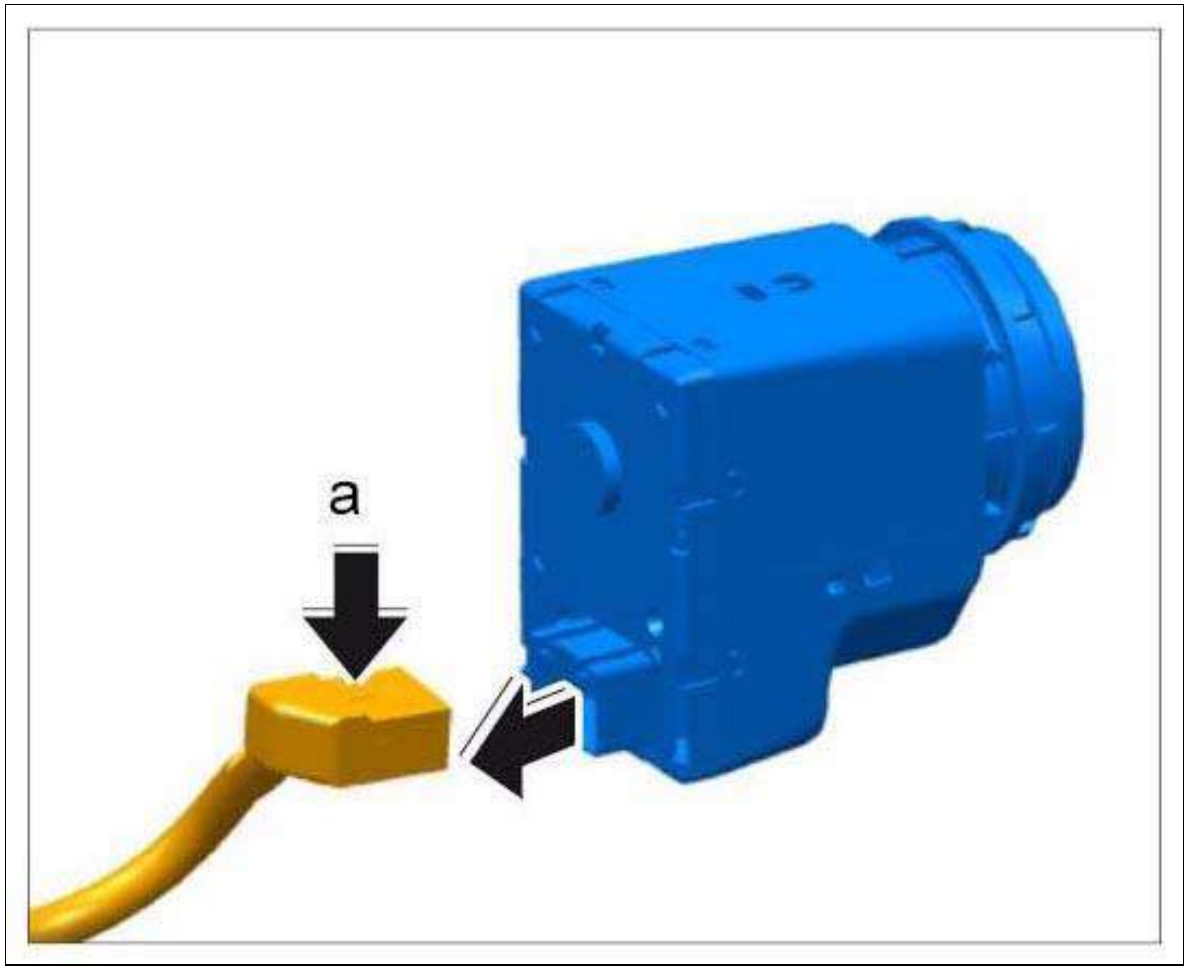

Courtesy of PORSCHE CARS NORTH AMERICA, INC.

WM 280419 REMOVING AND INSTALLING IGNITION STARTER SWITCH (EXCEPT CARRERA "EDITION", CARRERA CABRIOLET "EDITION", CARRERA 4 "EDITION", TARGA 4, TARGA 4S, TARGA 4 GTS, CARR. 4 CABRIO, CARR. 4S CABRIO, TURBO CABRIO, CARR. 4 GTS CABRIO, TURBO S CABRIO, CARRERA 4 CABRIOLET "EDITION") > INSTALLING IGNITION STARTER SWITCH

1. Plug in electric plug connection on the ignition starter switch **-arrow-** until the connector locks securely.

Fig 1: Installing Ignition Starter Switch Connector

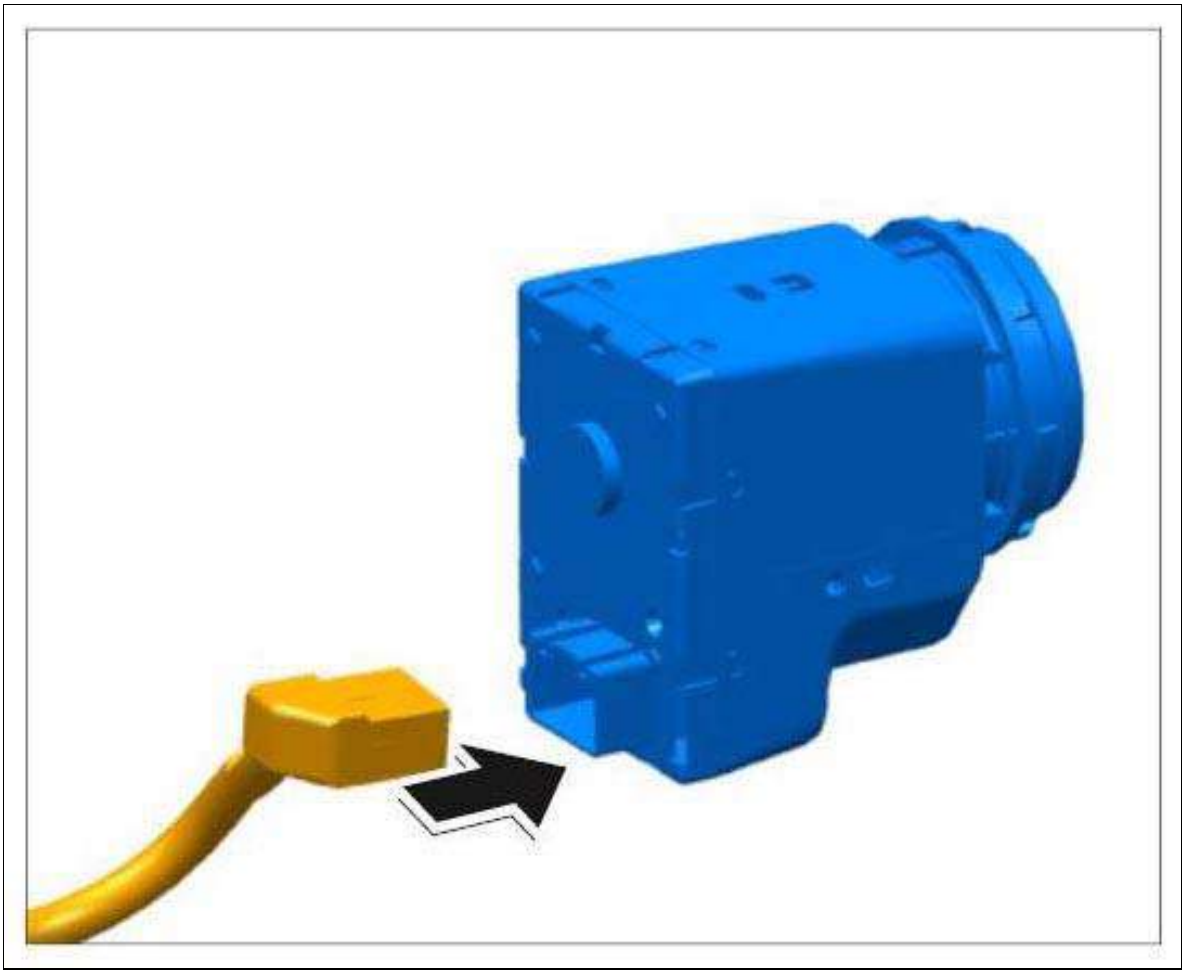

Courtesy of PORSCHE CARS NORTH AMERICA, INC.

2. Position ignition starter switch in the dashboard from below **-D-** . Fit union nut **-1-** and slide it over the ignition starter switch. Check that it fits perfectly. Use special tool **key 9800** to tighten the union nut **-1-** .

→ **Tightening torque: 6 Nm (4.5 ft lb.)+1 Nm (+0.5 ftlb.)-0.5 Nm (-0.25 ft lb.)**

Fig 2: Positioning Ignition Starter Switch

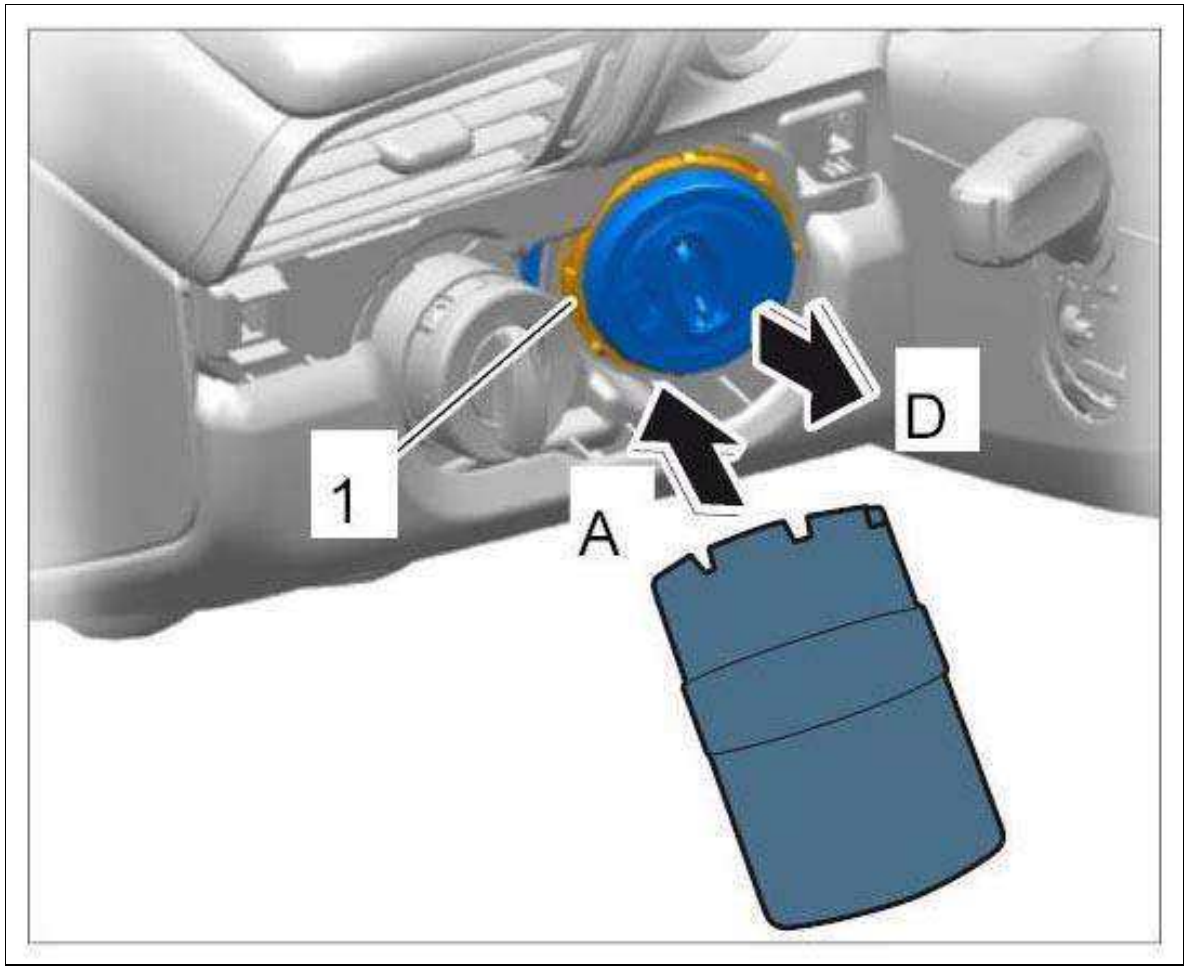

Courtesy of PORSCHE CARS NORTH AMERICA, INC.

WM 280419 REMOVING AND INSTALLING IGNITION STARTER SWITCH (EXCEPT CARRERA "EDITION", CARRERA CABRIOLET "EDITION", CARRERA 4 "EDITION", TARGA 4, TARGA 4S, TARGA 4 GTS, CARR. 4 CABRIO, CARR. 4S CABRIO, TURBO CABRIO, CARR. 4 GTS CABRIO, TURBO S CABRIO, CARRERA 4 CABRIOLET "EDITION") > SUBSEQUENT WORK

1. Install knee airbag on driver's side. → INSTALLING KNEE AIRBAG ON DRIVER'S SIDE

   Information

   1. The molding on the driver's side at the right must be removed and installed on right-hand drive vehicles.

2. Install dashboard molding on driver's side (left). → INSTALLING DASHBOARD MOLDING ON DRIVER'S SIDE -

3. Connect battery ground strap. → 2X00IN WORK INSTRUCTIONS AFTER DISCONNECTING THE BATTERY

WM 282020 REMOVING AND INSTALLING IGNITION COILS (EXCEPT CARRERA

"EDITION", CARRERA CABRIOLET "EDITION", TURBO, TURBO S, CARRERA 4 "EDITION", TURBO CABRIO, TURBO S CABRIO, CARRERA 4 CABRIOLET "EDITION", GT3, GT3 RS > TECHNICAL VALUES

Location	Description	Type	Basic value	Tolerance 1	Tolerance 2
Ignition coil to cylinder head cover	Internal Torx, M6 x 16	Tightening torque	10 Nm (7.5 ftlb.)		

WM 282020 REMOVING AND INSTALLING IGNITION COILS (EXCEPT CARRERA "EDITION", CARRERA CABRIOLET "EDITION", TURBO, TURBO S, CARRERA 4 "EDITION", TURBO CABRIO, TURBO S CABRIO, CARRERA 4 CABRIOLET "EDITION", GT3, GT3 RS > PRELIMINARY WORK

1. Remove heat shield at the top.

   → REMOVING HEAT SHIELD - UPPER PART .

WM 282020 REMOVING AND INSTALLING IGNITION COILS (EXCEPT CARRERA "EDITION", CARRERA CABRIOLET "EDITION", TURBO, TURBO S, CARRERA 4 "EDITION", TURBO CABRIO, TURBO S CABRIO, CARRERA 4 CABRIOLET "EDITION", GT3, GT3 RS > REMOVING IGNITION COILS

1. Remove ignition coil **-1-** .

   1. 1.1. Release and disconnect electric connector **-2-** .
   2. 1.2. Unscrew screw **-3-** and pull off ignition coil **-1-** .

Fig 1: Identifying Ignition Coils Screws

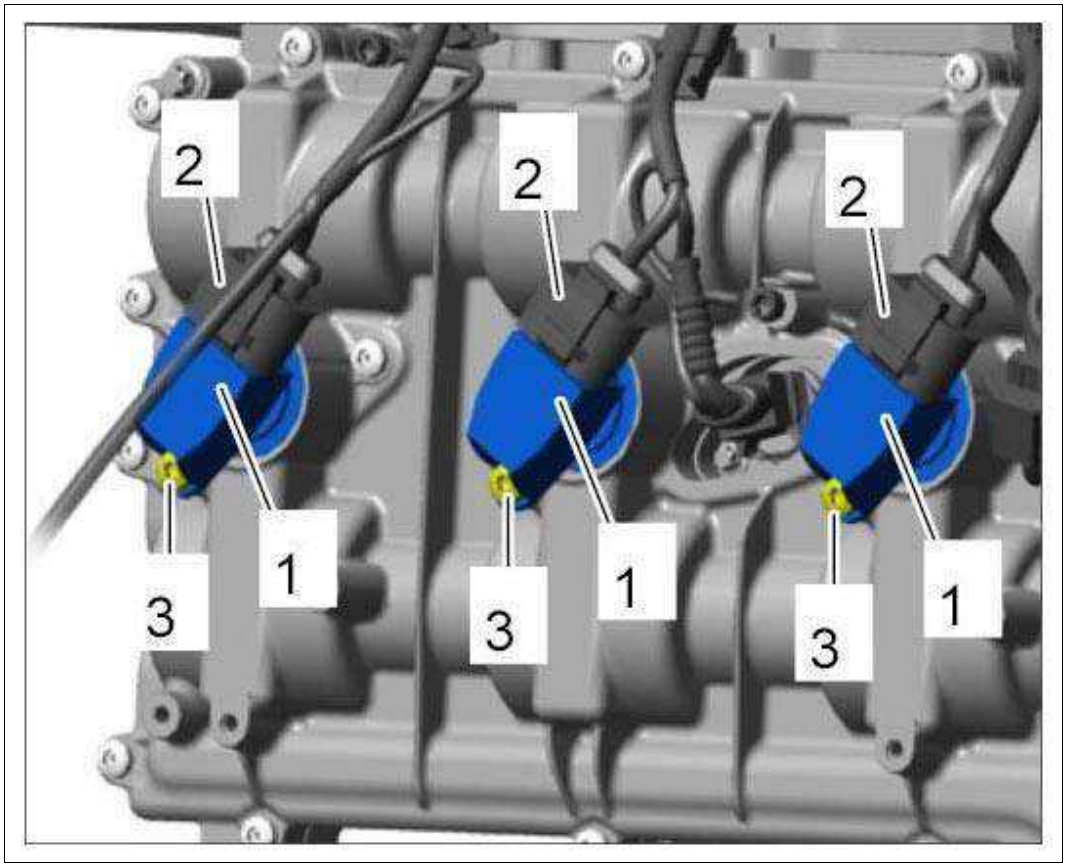

Courtesy of PORSCHE CARS NORTH AMERICA, INC.

WM 282020 REMOVING AND INSTALLING IGNITION COILS (EXCEPT CARRERA "EDITION", CARRERA CABRIOLET "EDITION", TURBO, TURBO S, CARRERA 4 "EDITION", TURBO CABRIO, TURBO S CABRIO, CARRERA 4 CABRIOLET "EDITION", GT3, GT3 RS > INSTALLING IGNITION COILS

1. Install ignition coil **-1-** .

    1. 1.1. Insert ignition coil as far as it will go.

    2. 1.2. Tighten screw **-3-** .

       Tightening torque 10 Nm (7.5 ftlb.)

    3. 1.3. Connect electric connector **-2-** . When doing so, make sure you hear it latching into place and check that it is firmly seated by pushing it up.

Fig 1: Identifying Ignition Coils Screws

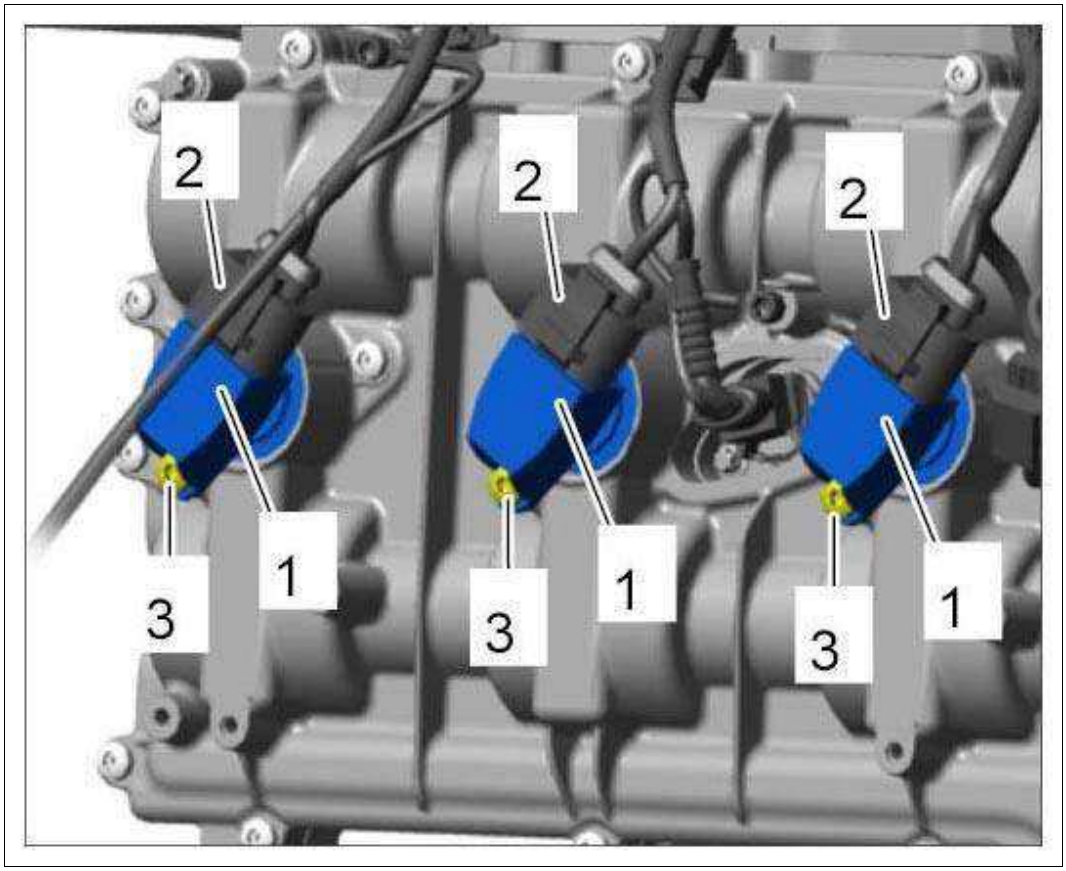

Courtesy of PORSCHE CARS NORTH AMERICA, INC.

WM 282020 REMOVING AND INSTALLING IGNITION COILS (EXCEPT CARRERA "EDITION", CARRERA CABRIOLET "EDITION", TURBO, TURBO S, CARRERA 4 "EDITION", TURBO CABRIO, TURBO S CABRIO, CARRERA 4 CABRIOLET "EDITION", GT3, GT3 RS > SUBSEQUENT WORK

1. Install heat shield at the top.

   → INSTALLING HEAT SHIELD .

WM 283919 REMOVING AND INSTALLING HALL SENDER (EXCEPT CARRERA "EDITION", CARRERA CABRIOLET "EDITION", TURBO, TURBO S, CARRERA 4 "EDITION", TURBO CABRIO, TURBO S CABRIO, CARRERA 4 CABRIOLET "EDITION", GT3, GT3 RS > TECHNICAL VALUES

Location	Description	Type	Basic value	Tolerance 1	Tolerance 2
Hall sender for cylinder bank 1-3 to the cylinder head cover	M6 x 16 inner Torx	Tightening torque	10 Nm		

Hall sender for cylinder bank 4-6 to the cylinder head cover	M6 x 16 inner Torx	Tightening torque	10 Nm

WM 287020 REMOVING AND INSTALLING SPARK PLUGS (EXCEPT CARRERA "EDITION", CARRERA CABRIOLET "EDITION", TURBO, TURBO S, CARRERA 4 "EDITION", TURBO CABRIO, TURBO S CABRIO, CARRERA 4 CABRIOLET "EDITION", GT3, GT3 RS > TOOLS

Designation	Type	Number	Description	
spark-plug socket wrench	Commercially available tool	Nr.14		
extension	Commercially available tool	Nr.15		

WM 287020 REMOVING AND INSTALLING SPARK PLUGS (EXCEPT CARRERA "EDITION", CARRERA CABRIOLET "EDITION", TURBO, TURBO S, CARRERA 4 "EDITION", TURBO CABRIO, TURBO S CABRIO, CARRERA 4 CABRIOLET "EDITION", GT3, GT3 RS > PRELIMINARY WORK

Information

- Check sealing ring on turbocharger intake air line for damage and check that it is fitted correctly.
- Replace sealing ring if it is damaged.

1. Remove ignition coils.

→ Removing Ignition Coils .

WM 287020 REMOVING AND INSTALLING SPARK PLUGS (EXCEPT CARRERA "EDITION", CARRERA CABRIOLET "EDITION", TURBO, TURBO S, CARRERA 4 "EDITION", TURBO CABRIO, TURBO S CABRIO, CARRERA 4 CABRIOLET "EDITION", GT3, GT3 RS > REMOVAL > REMOVING SPARK PLUGS

NOTE: Incorrect tool

- *Risk of damage to components*

→ Use prescribed tool.

1. Unscrew spark plugs using **spark-plug socket wrench Nr.14** and **extension Nr.15 -1-** .

Fig 1: Removing Spark Plug

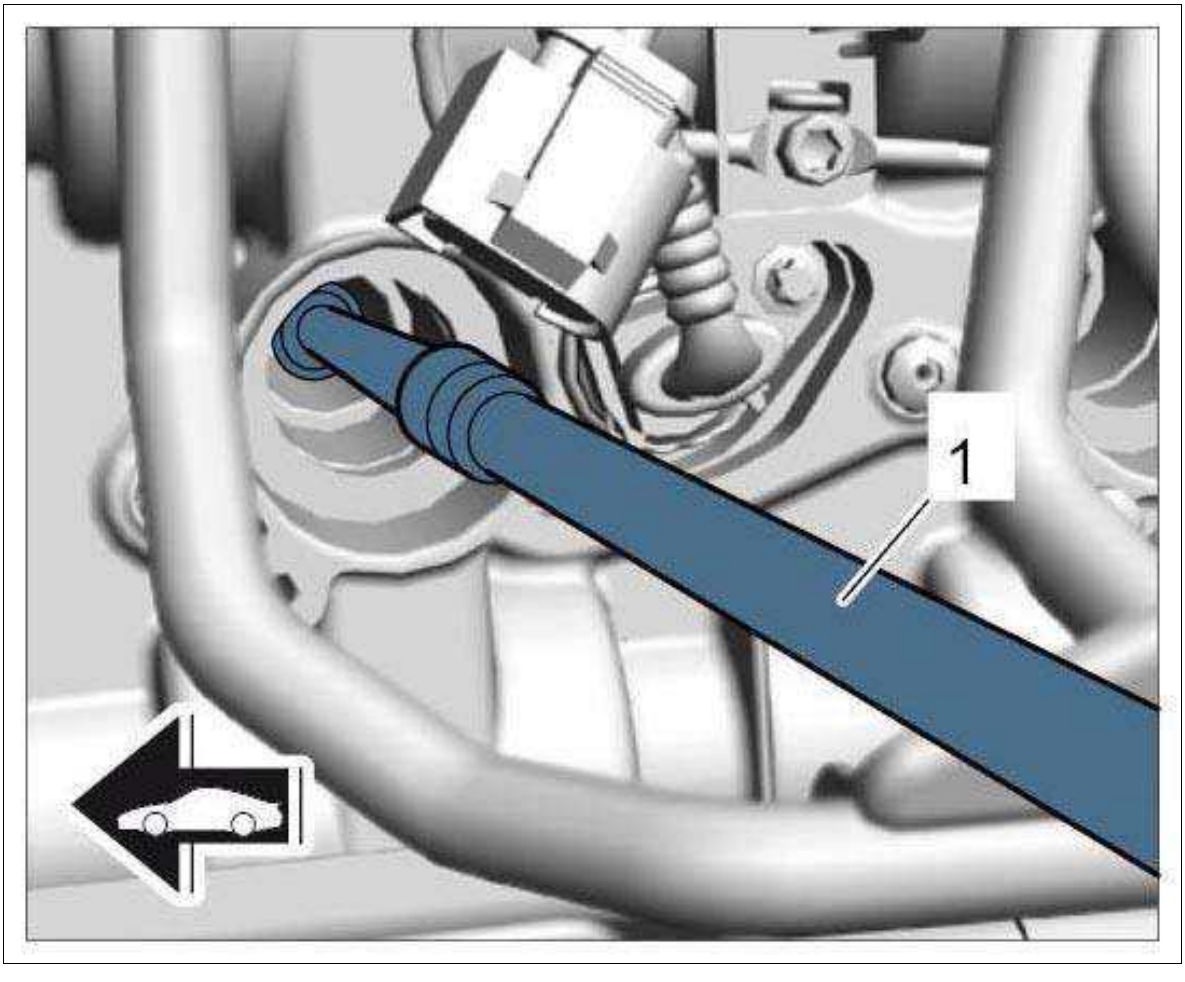

Courtesy of PORSCHE CARS NORTH AMERICA, INC.

WM 287020 REMOVING AND INSTALLING SPARK PLUGS (EXCEPT CARRERA "EDITION", CARRERA CABRIOLET "EDITION", TURBO, TURBO S, CARRERA 4 "EDITION", TURBO CABRIO, TURBO S CABRIO, CARRERA 4 CABRIOLET

"EDITION", GT3, GT3 RS > INSTALLATION > INSTALLING SPARK PLUGS

NOTE: Incorrect tool

- *Risk of damage to components*

→ Use prescribed tool.

1. Fit spark plugs using **spark-plug socket wrench Nr.14** and **extension Nr.15 -1-** and then tighten according to specifications.

   Fig 1: Installing Spark Plug

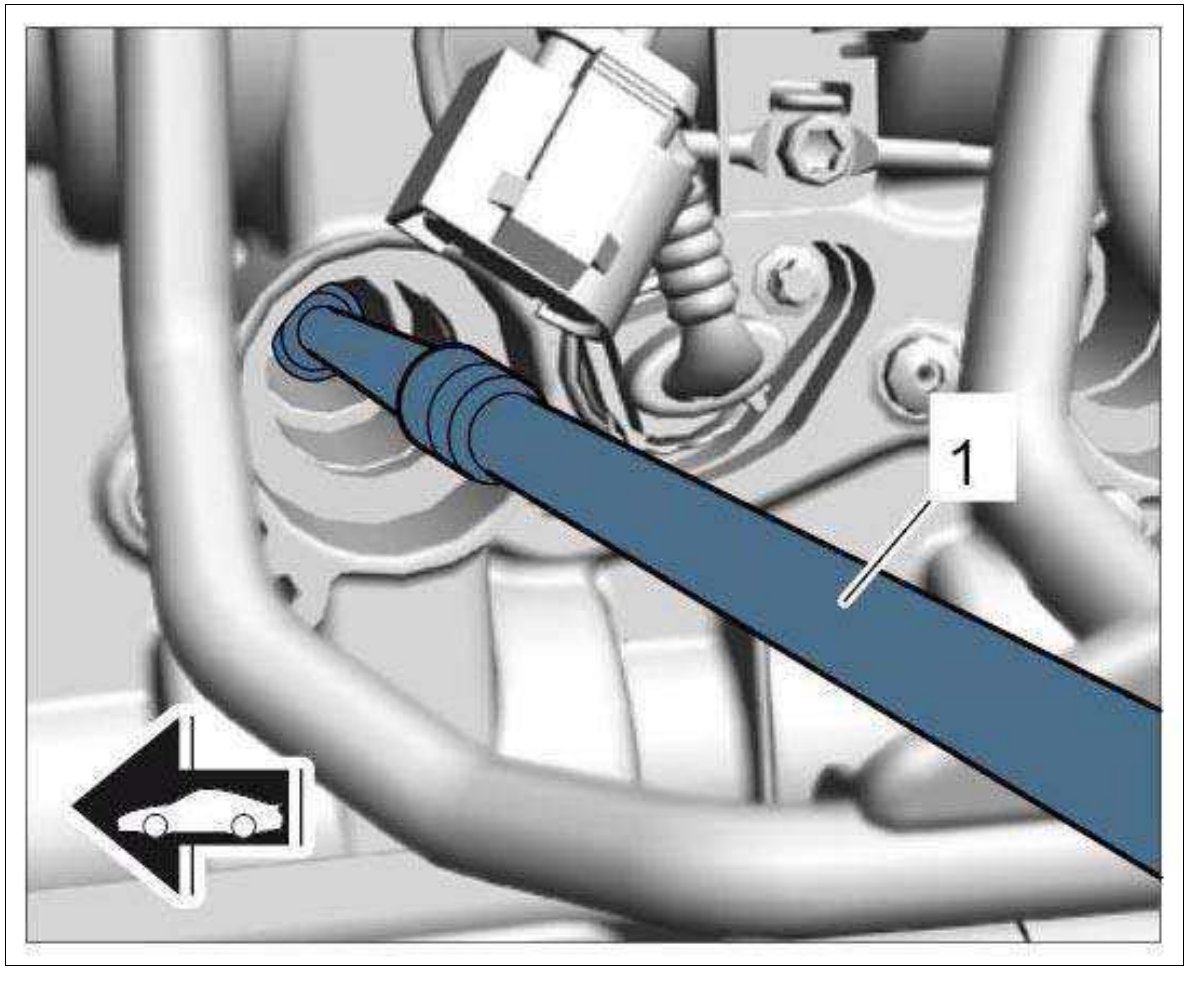

Courtesy of PORSCHE CARS NORTH AMERICA, INC.

WM 287020 REMOVING AND INSTALLING SPARK PLUGS (EXCEPT CARRERA "EDITION", CARRERA CABRIOLET "EDITION", TURBO, TURBO S, CARRERA 4 "EDITION", TURBO CABRIO, TURBO S CABRIO, CARRERA 4 CABRIOLET "EDITION", GT3, GT3 RS > SUBSEQUENT WORK

Information

- Check sealing ring on turbocharger intake air line for damage and check that it is fitted correctly.

- Replace sealing ring if it is damaged.

1. Install ignition coils.

   → Installing Ignition Coils .

WM 287219 REMOVING AND INSTALLING KNOCK SENSOR (EXCEPT CARRERA "EDITION", CARRERA CABRIOLET "EDITION", TURBO, TURBO S, CARRERA 4 "EDITION", TURBO CABRIO, CARRERA 4 CABRIOLET "EDITION", GT3, GT3 RS > TECHNICAL VALUES

Location	Description	Type	Basic value	Tolerance 1	Tolerance 2
Fastening screw securing knock sensor to crankcase	External Torx screw, M8 x 35	Tightening torque	23 Nm (17 ftlb.)	+/-2 Nm (+/- 1.5 ftlb.)	
Fastening screw securing knock sensor to crankcase	External Torx screw, M8 x 35	Tightening torque	23 Nm (17 ftlb.)	+/-2 Nm (+/- 1.5 ftlb.)	
Fastening screw securing high-pressure line holder to cylinder head	External Torx screw, M6 x 45	Tightening torque	10 Nm (7.5 ftlb.)		
Fastening screw securing high-pressure line holding clamp to holder	External Torx screw, M6 x 12	Tightening torque	10 Nm (7.5 ftlb.)		

WM 287219 REMOVING AND INSTALLING KNOCK SENSOR (EXCEPT CARRERA "EDITION", CARRERA CABRIOLET "EDITION", TURBO, TURBO S, CARRERA 4 "EDITION", TURBO CABRIO, CARRERA 4 CABRIOLET "EDITION", GT3, GT3 RS > PRELIMINARY WORK

Preliminary work for knock sensor for cylinder bank 1-3:

1. Remove the generator. → REMOVING GENERATOR

   Preliminary work for knock sensor for cylinder bank 4-6:

2. Remove intake-air distributor for cylinder bank 4-6. → REMOVING INTAKE-AIR DISTRIBUTOR - BANK 4-6

WM 287219 REMOVING AND INSTALLING KNOCK SENSOR (EXCEPT CARRERA "EDITION", CARRERA CABRIOLET "EDITION", TURBO, TURBO S, CARRERA 4 "EDITION", TURBO CABRIO, CARRERA 4 CABRIOLET "EDITION", GT3, GT3 RS >

REMOVING KNOCK SENSOR > REMOVING KNOCK SENSOR FOR CYLINDER BANK 1-3

Information

Before removing the knock sensor, mark the installation position using a water-resistant marker.

Fig 1: Identifying Knock Sensors Position

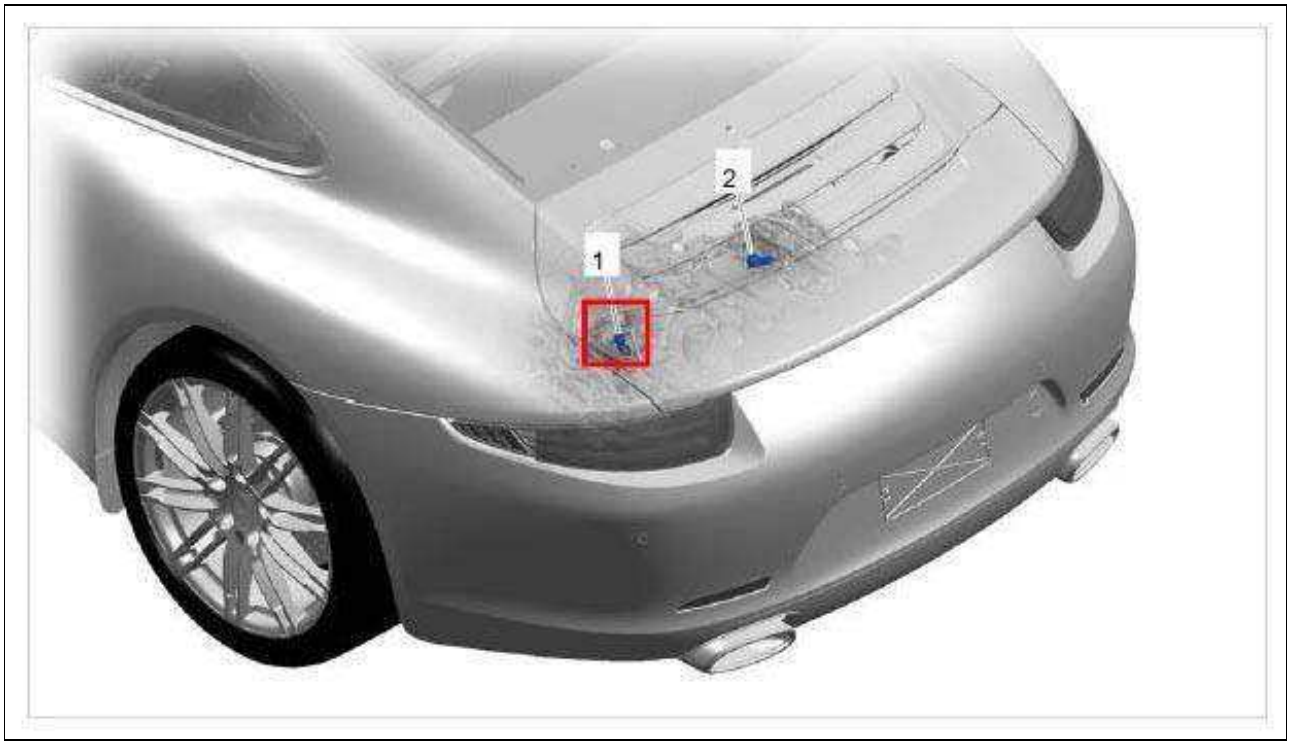

Courtesy of PORSCHE CARS NORTH AMERICA, INC.

1. Knock sensor for cylinder bank 1-3
2. Knock sensor for cylinder bank 4-6

1. Remove knock sensor for cylinder bank 1-3.
    1. 1.1. Mark installation position of the knock sensor **-2-** .
    2. 1.2. Unscrew external Torx screw (E12, M8 x 35) **-1-** .

Fig 2: Identifying Knock Sensor For Cylinder Bank 1-3

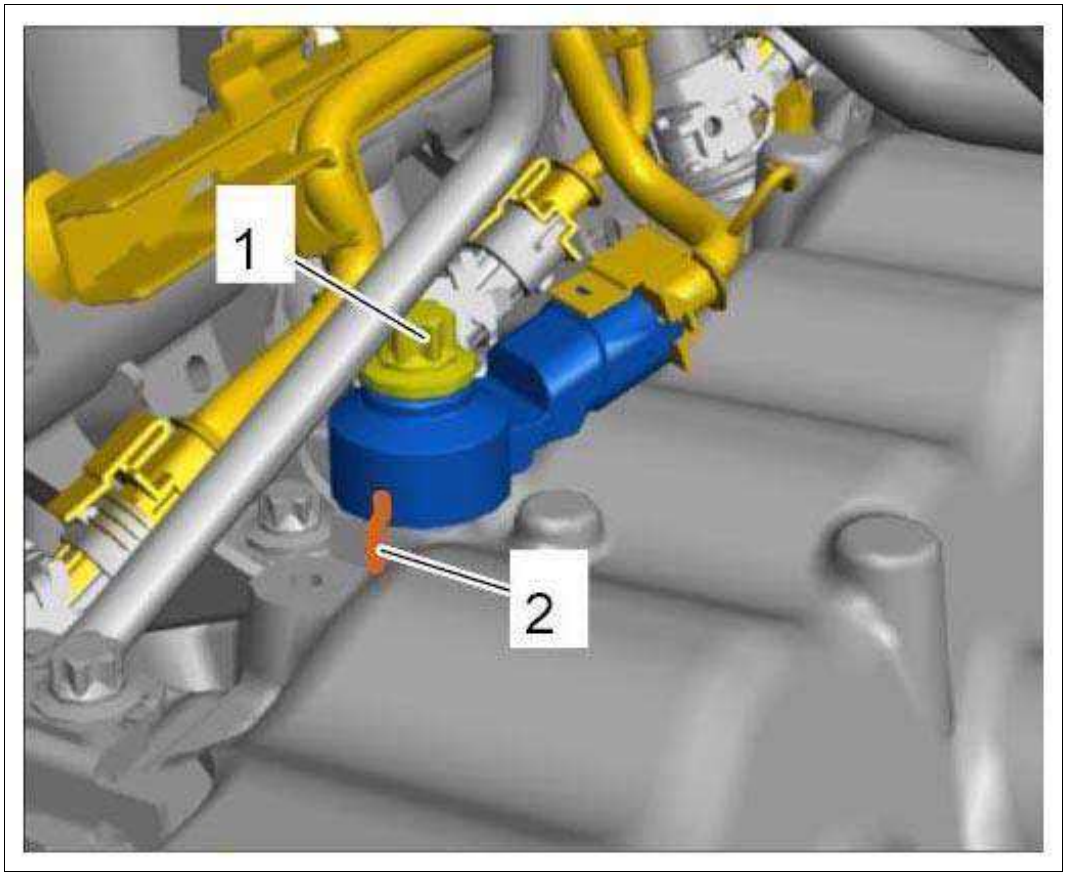

Courtesy of PORSCHE CARS NORTH AMERICA, INC.

2. Disconnect plug connection.

    1. 2.1. Release plug connection **-a-** and pull off the knock sensor **-B-** .

Fig 3: Disconnecting Plug Connection

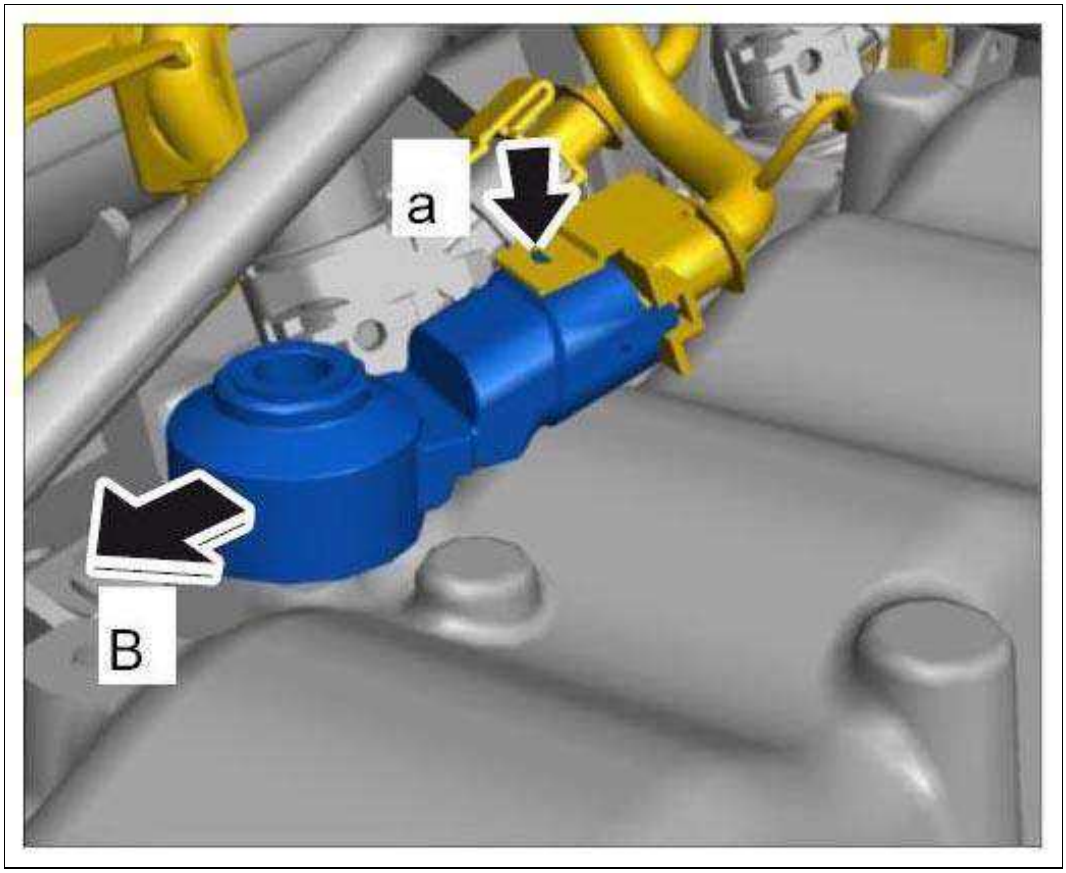

Courtesy of PORSCHE CARS NORTH AMERICA, INC.

WM 287219 REMOVING AND INSTALLING KNOCK SENSOR (EXCEPT CARRERA "EDITION", CARRERA CABRIOLET "EDITION", TURBO, TURBO S, CARRERA 4 "EDITION", TURBO CABRIO, CARRERA 4 CABRIOLET "EDITION", GT3, GT3 RS > REMOVING KNOCK SENSOR > REMOVING KNOCK SENSOR FOR CYLINDER BANK 4-6

Information

Before removing the knock sensor, mark the installation position using a water-resistant marker.

Fig 1: Identifying Knock Sensors Position

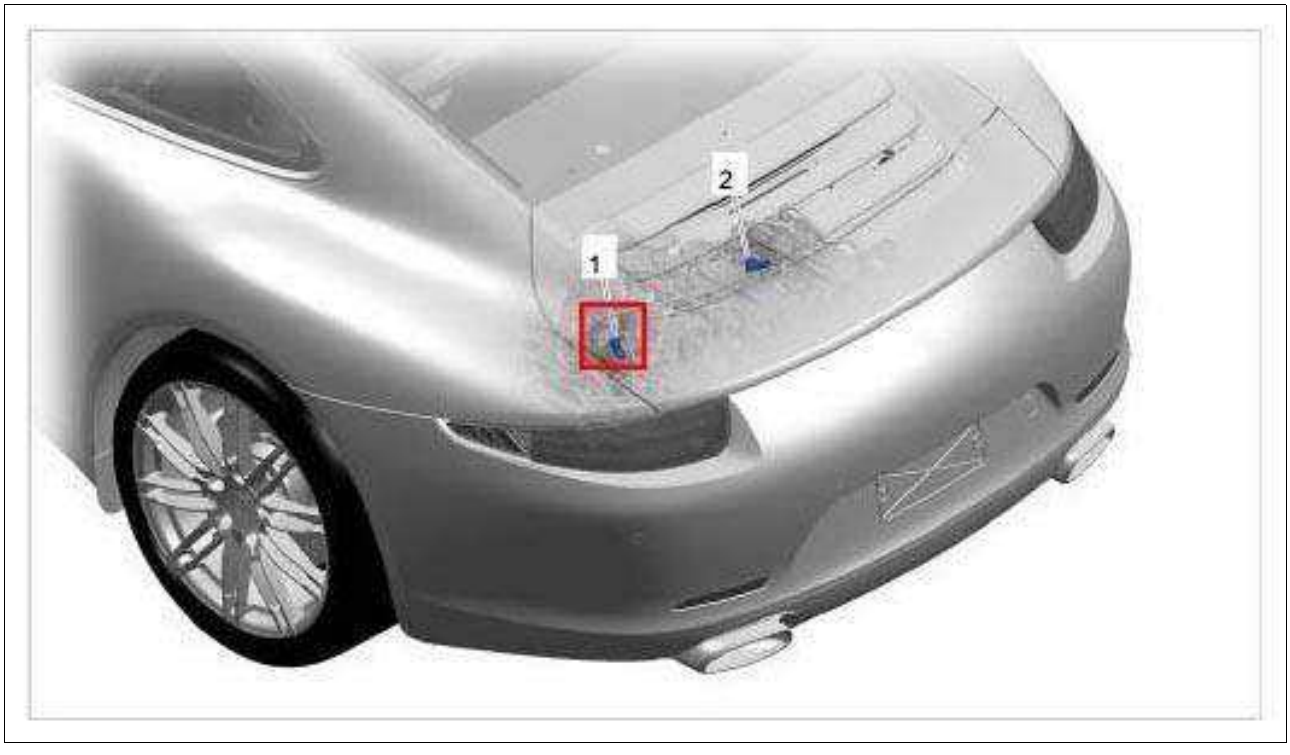

Courtesy of PORSCHE CARS NORTH AMERICA, INC.

1. Knock sensor for cylinder bank 1-3
2. Knock sensor for cylinder bank 4-6

1. Loosen bracket for high-pressure line.

    1. 1.1. Unscrew external Torx screw (E11, M6 x 45) **-1-** .
    2. 1.2. Loosen external Torx screw (E11, M6 x 12) for clamp **-2-** .
    3. 1.3. Swivel the bracket to the rear.

Fig 2: Identifying High-Pressure Line Bracket

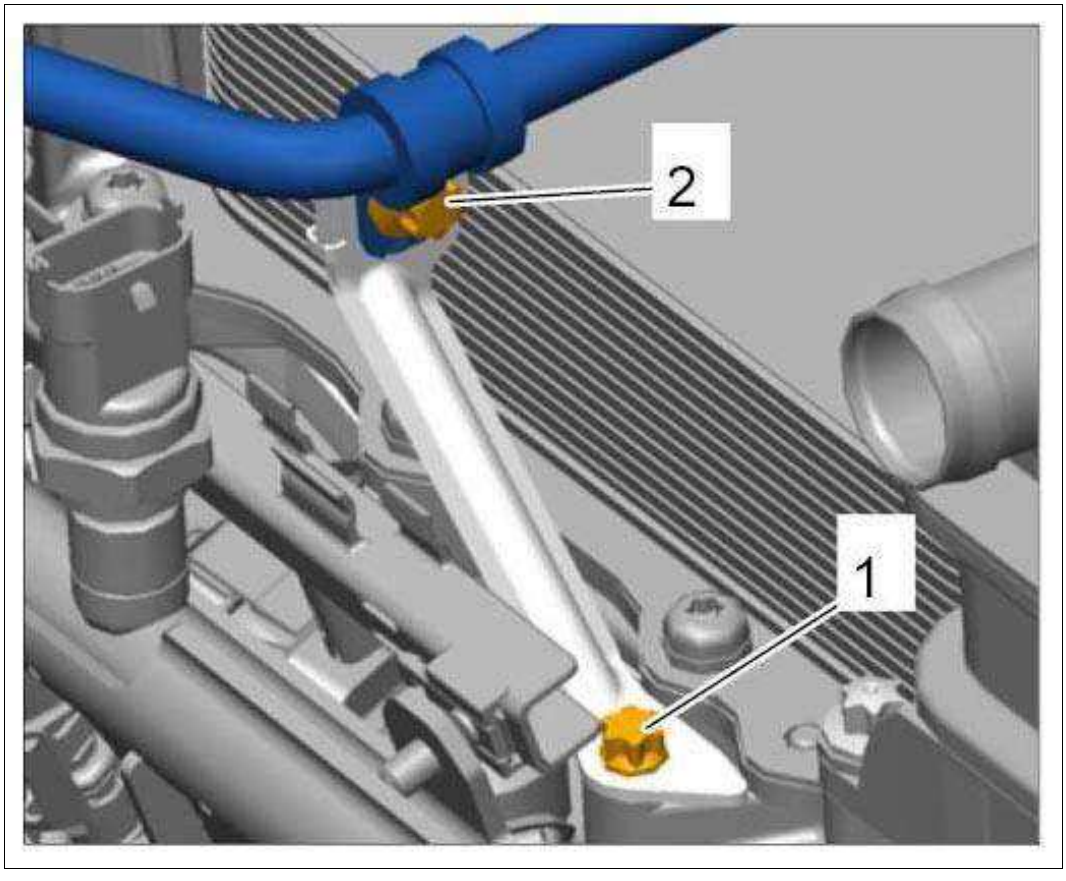

Courtesy of PORSCHE CARS NORTH AMERICA, INC.

2. Loosen cable duct for engine wire harness.

    1. 2.1. Unclip the cable duct at the two fastening clips **-1-** .
    2. 2.2. Check the fastening clips inserted in the cable duct for damage and replace them if necessary.

Fig 3: Identifying Engine Wire Harness Cable Duct

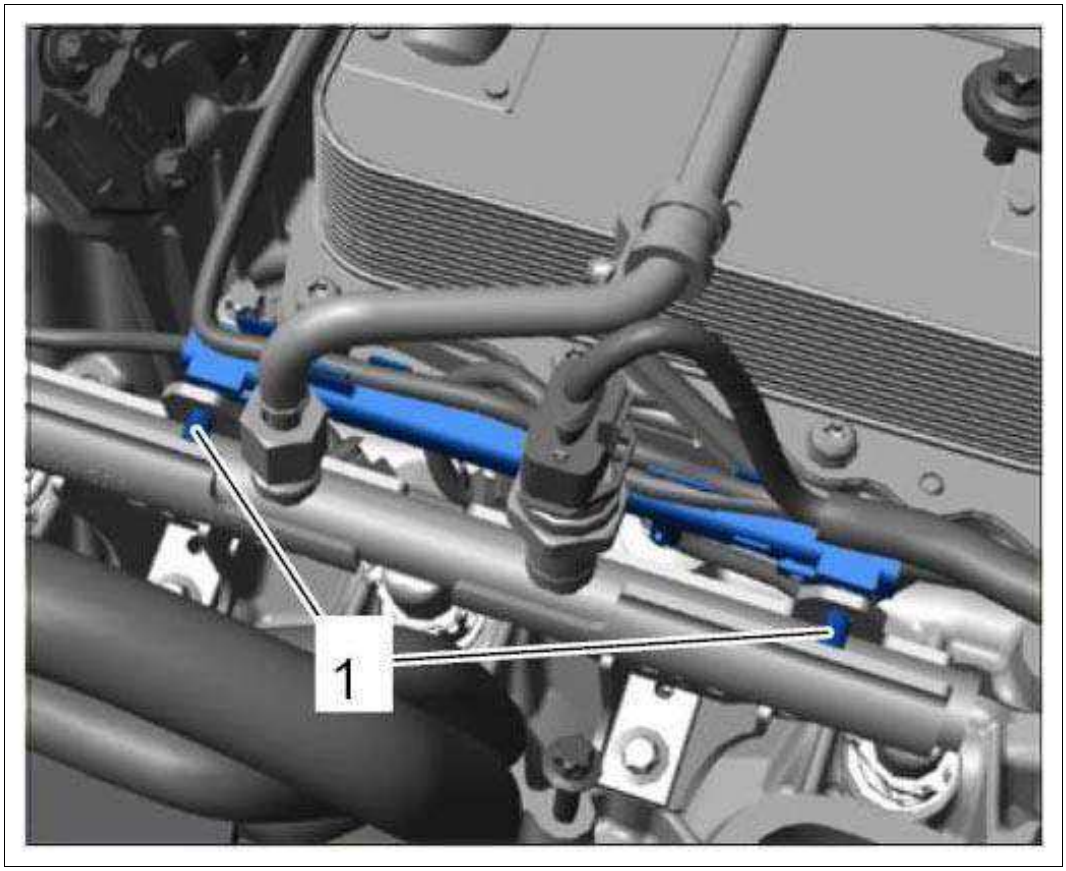

Courtesy of PORSCHE CARS NORTH AMERICA, INC.

3. Remove knock sensor for cylinder bank 4-6.

    1. 3.1. Mark installation position of the knock sensor **-2-** .
    2. 3.2. Unscrew external Torx screw (E12, M8 x 35) **-1-** .

Fig 4: Identifying Knock Sensor For Cylinder Bank 4-6

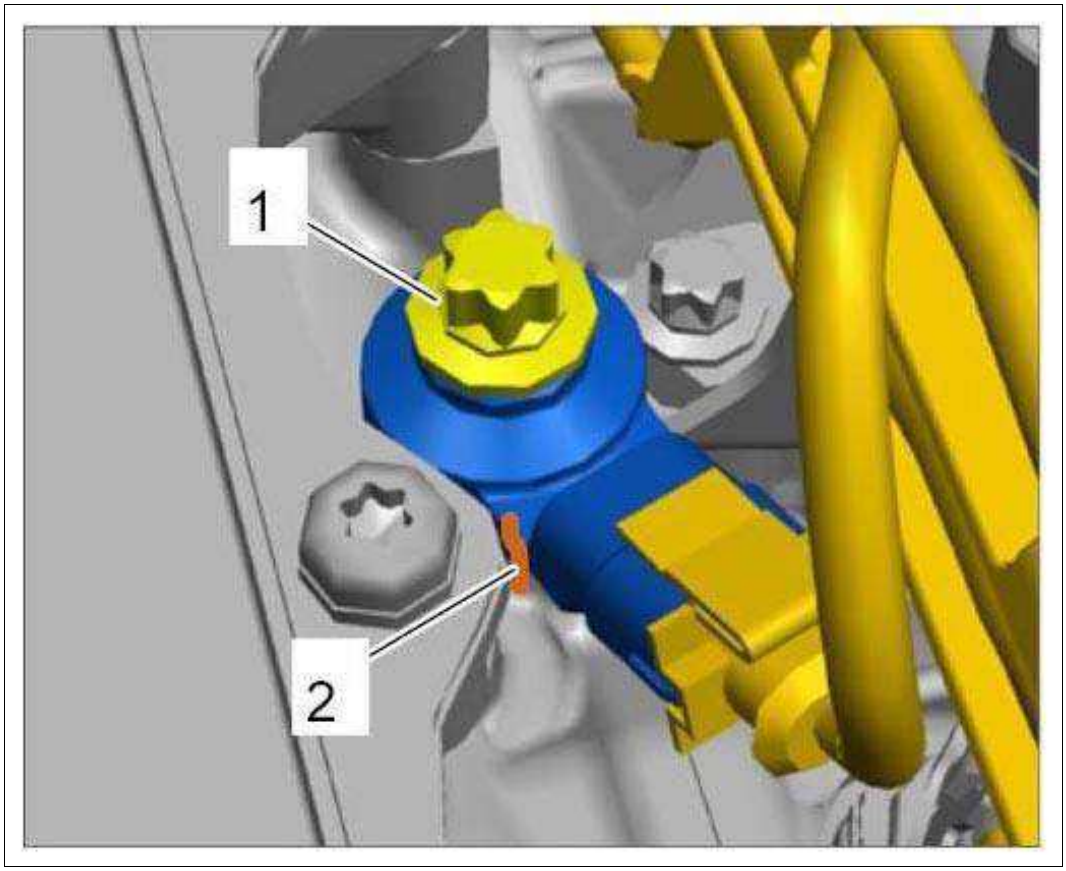

Courtesy of PORSCHE CARS NORTH AMERICA, INC.

4. Disconnect plug connection.

    1. 4.1. Release plug connection **-a-** and pull off the knock sensor **-B-** .

Fig 5: Disconnecting Plug Connection

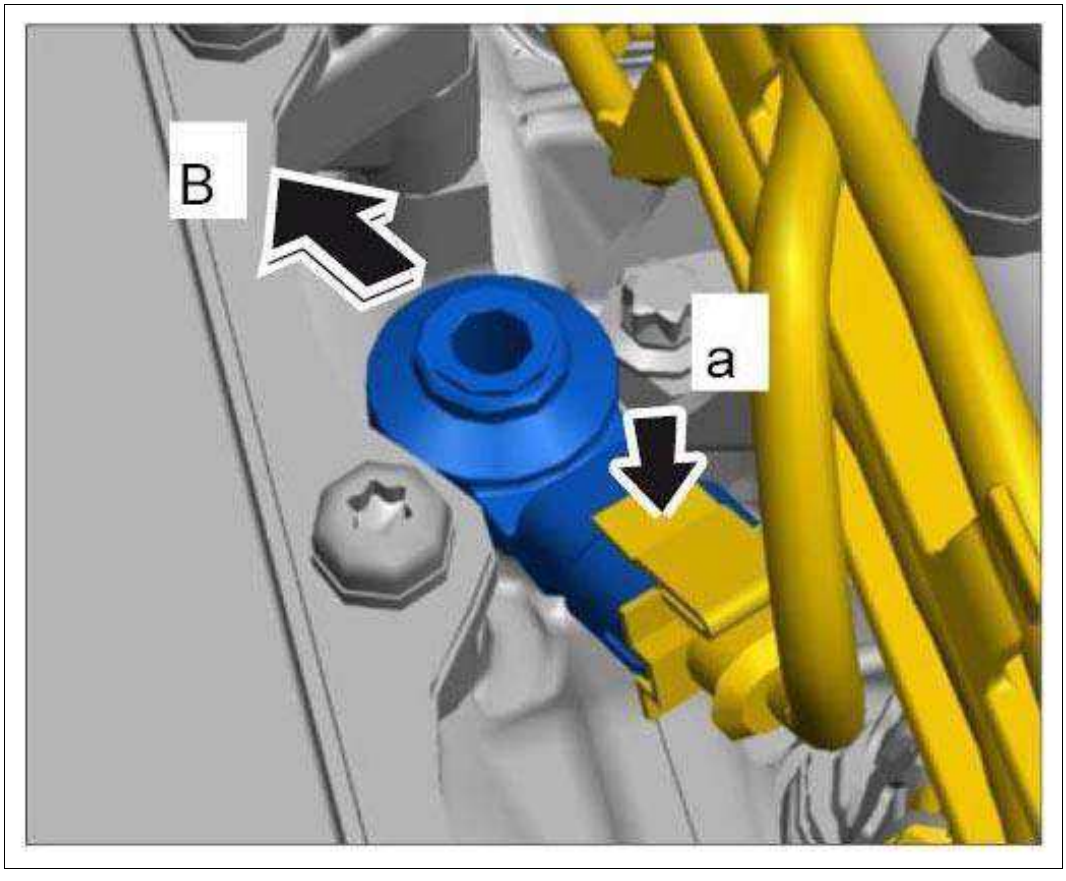

Courtesy of PORSCHE CARS NORTH AMERICA, INC.

WM 287219 REMOVING AND INSTALLING KNOCK SENSOR (EXCEPT CARRERA "EDITION", CARRERA CABRIOLET "EDITION", TURBO, TURBO S, CARRERA 4 "EDITION", TURBO CABRIO, CARRERA 4 CABRIOLET "EDITION", GT3, GT3 RS > INSTALLING KNOCK SENSOR > INSTALLING KNOCK SENSOR FOR CYLINDER BANK 1-3

1. Clean the contact surface on the crankcase.
2. Connect plug connection.
    1. 2.1. Connect knock sensor to the plug connection **-arrow-** until it engages securely.

Fig 1: Connecting Plug Connection

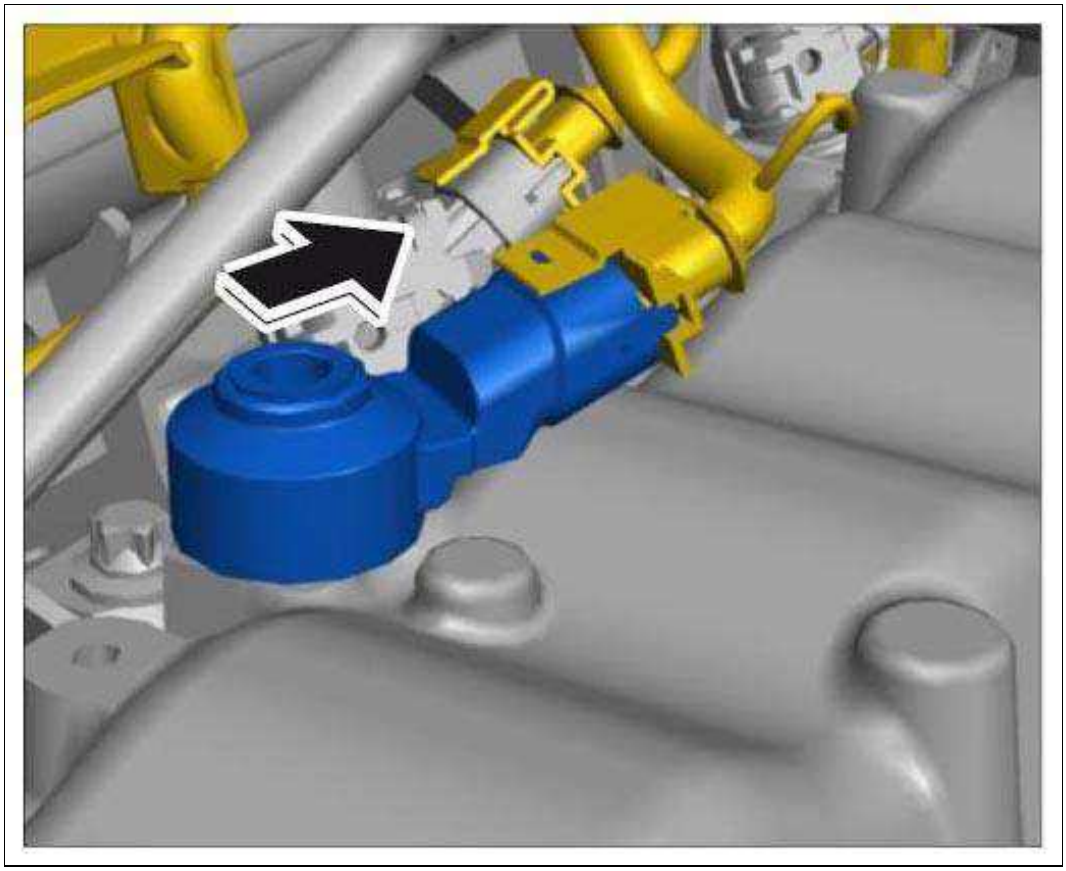

Courtesy of PORSCHE CARS NORTH AMERICA, INC.

3. Install knock sensor for cylinder bank 1-3.

    1. 3.1. Move the knock sensor into installation position according to the marking you made earlier **-2-** .

    2. 3.2. Screw in external Torx screw (E12, M8 x 35) **-1-** and tighten to the specified tightening torque.

    Information

    The precise tightening torque for the knock-sensor screw must be observed, otherwise the knock sensor might not function properly.

    → **Tightening torque: 23 Nm (17 ftlb.)+/-2 Nm (+/-1.5 ftlb.)**

Fig 2: Identifying Knock Sensor For Cylinder Bank 1-3

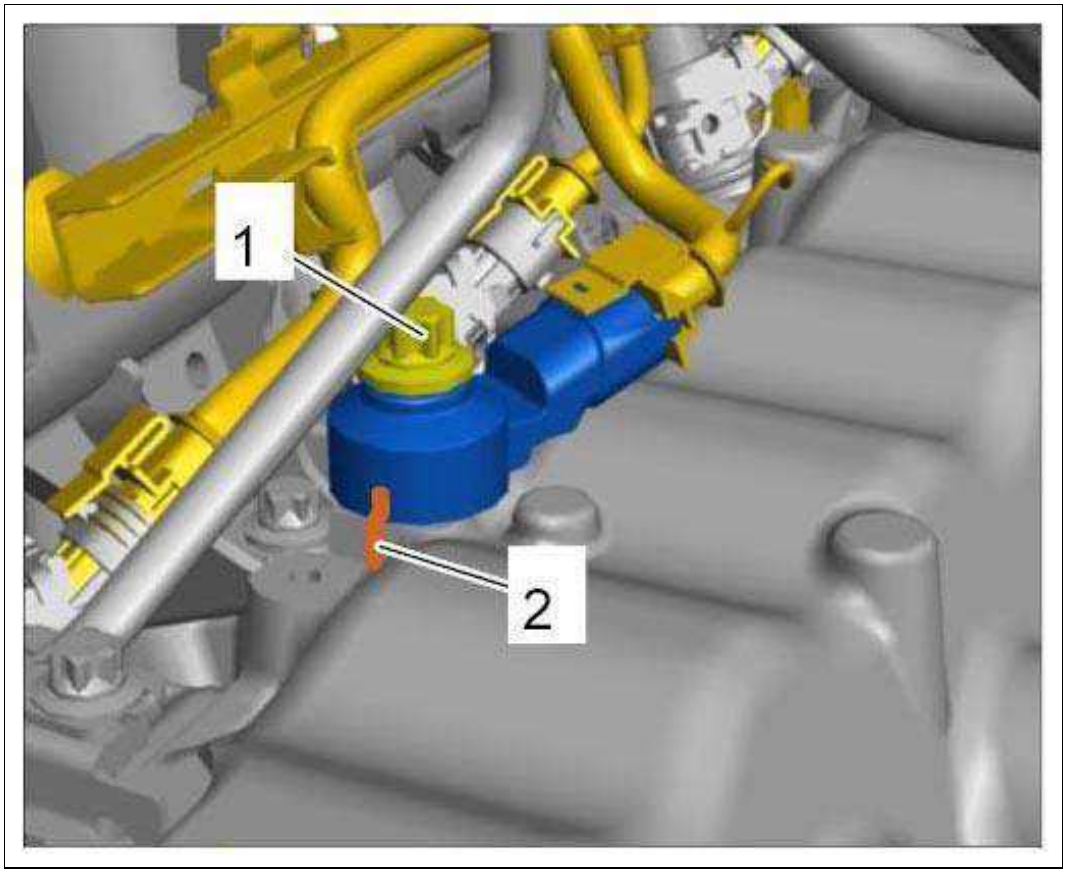

Courtesy of PORSCHE CARS NORTH AMERICA, INC.

WM 287219 REMOVING AND INSTALLING KNOCK SENSOR (EXCEPT CARRERA "EDITION", CARRERA CABRIOLET "EDITION", TURBO, TURBO S, CARRERA 4 "EDITION", TURBO CABRIO, CARRERA 4 CABRIOLET "EDITION", GT3, GT3 RS > INSTALLING KNOCK SENSOR > INSTALLING KNOCK SENSOR FOR CYLINDER BANK 4-6

1. Clean the contact surface on the crankcase.
2. Connect plug connection.
    1. 2.1. Connect plug connection **-arrow-** until it engages securely.

Fig 1: Connecting Plug Connection

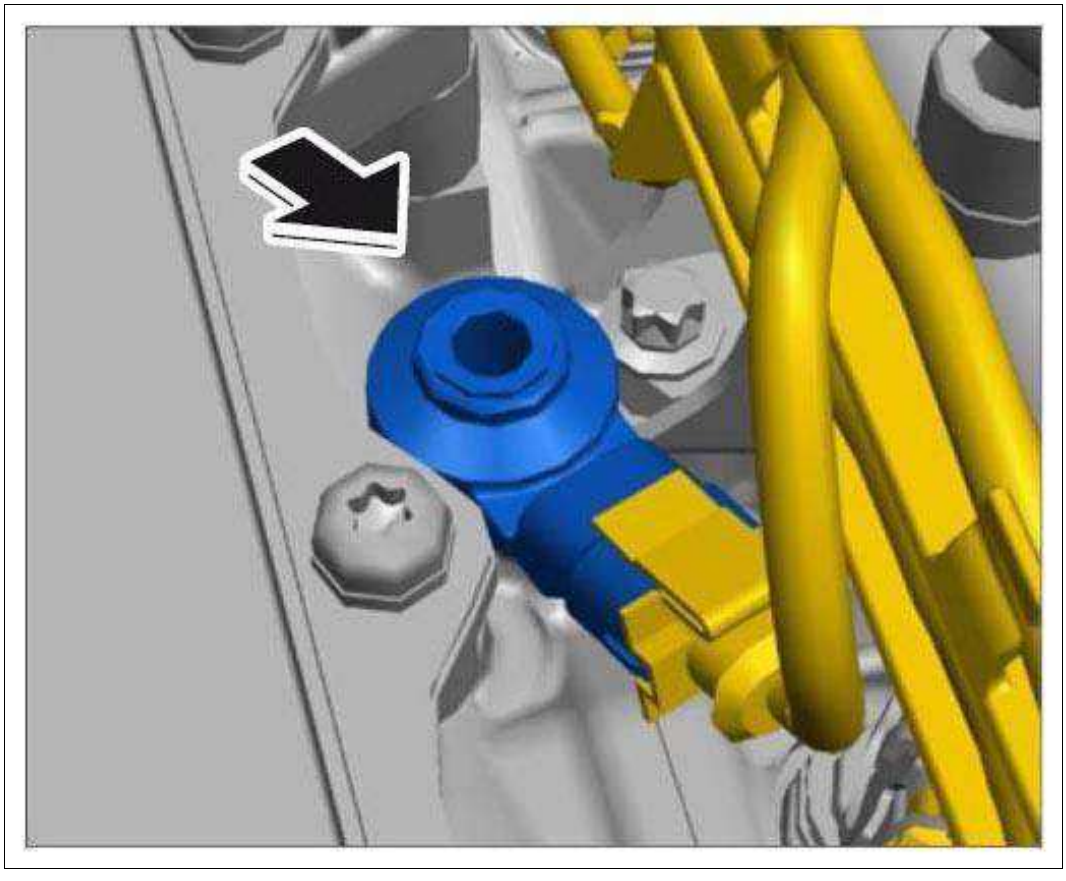

Courtesy of PORSCHE CARS NORTH AMERICA, INC.

3. Install knock sensor for cylinder bank 4-6.

    1. 3.1. Connect knock sensor to the plug connection **-arrow-** until it engages securely.
    2. 3.2. Move the knock sensor into installation position according to the marking you made earlier **-2-** .
    3. 3.3. Screw in external Torx screw (E12, M8 x 35) **-1-** and tighten to the specified tightening torque.

    Information

    The precise tightening torque for the knock-sensor screw must be observed, otherwise the knock sensor might not function properly.

    → **Tightening torque: 23 Nm (17 ftlb.)+/-2 Nm (+/-1.5 ftlb.)**

Fig 2: Identifying Knock Sensor For Cylinder Bank 4-6

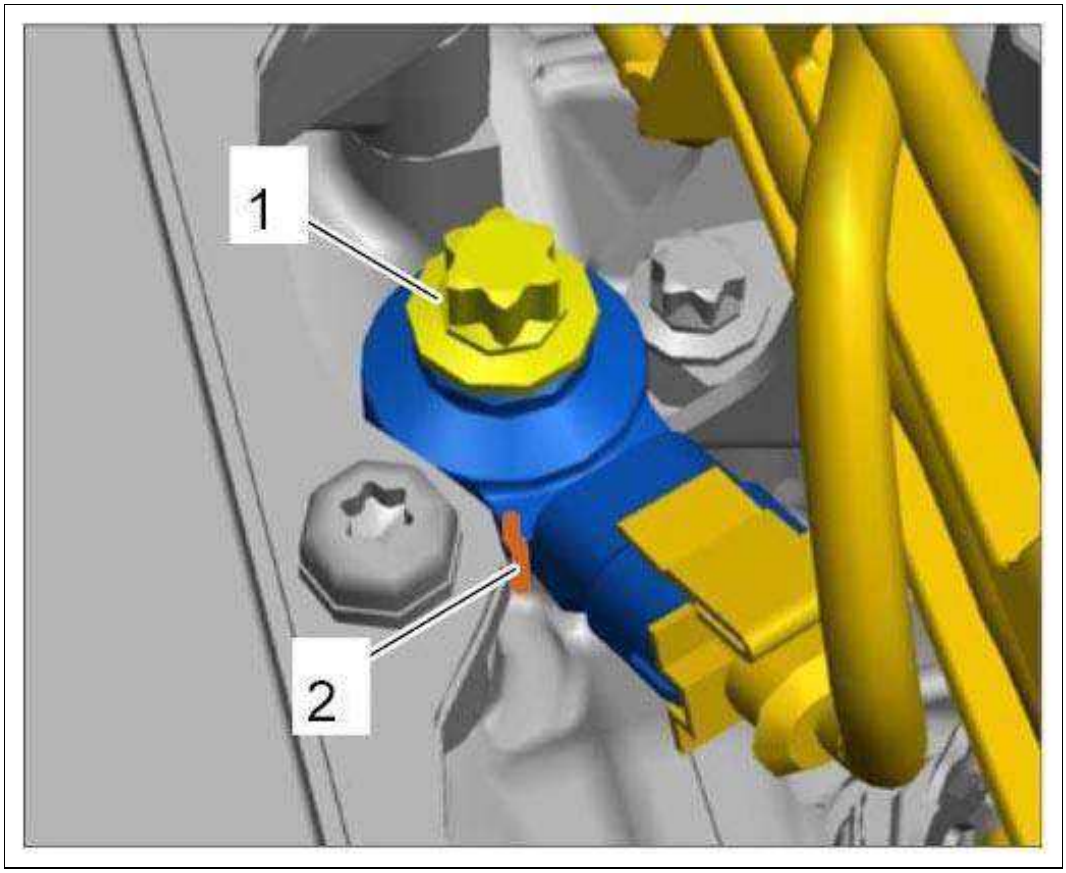

Courtesy of PORSCHE CARS NORTH AMERICA, INC.

4. Secure cable duct for engine wire harness with the two fastening clips **-1-** .

Fig 3: Identifying Engine Wire Harness Cable Duct

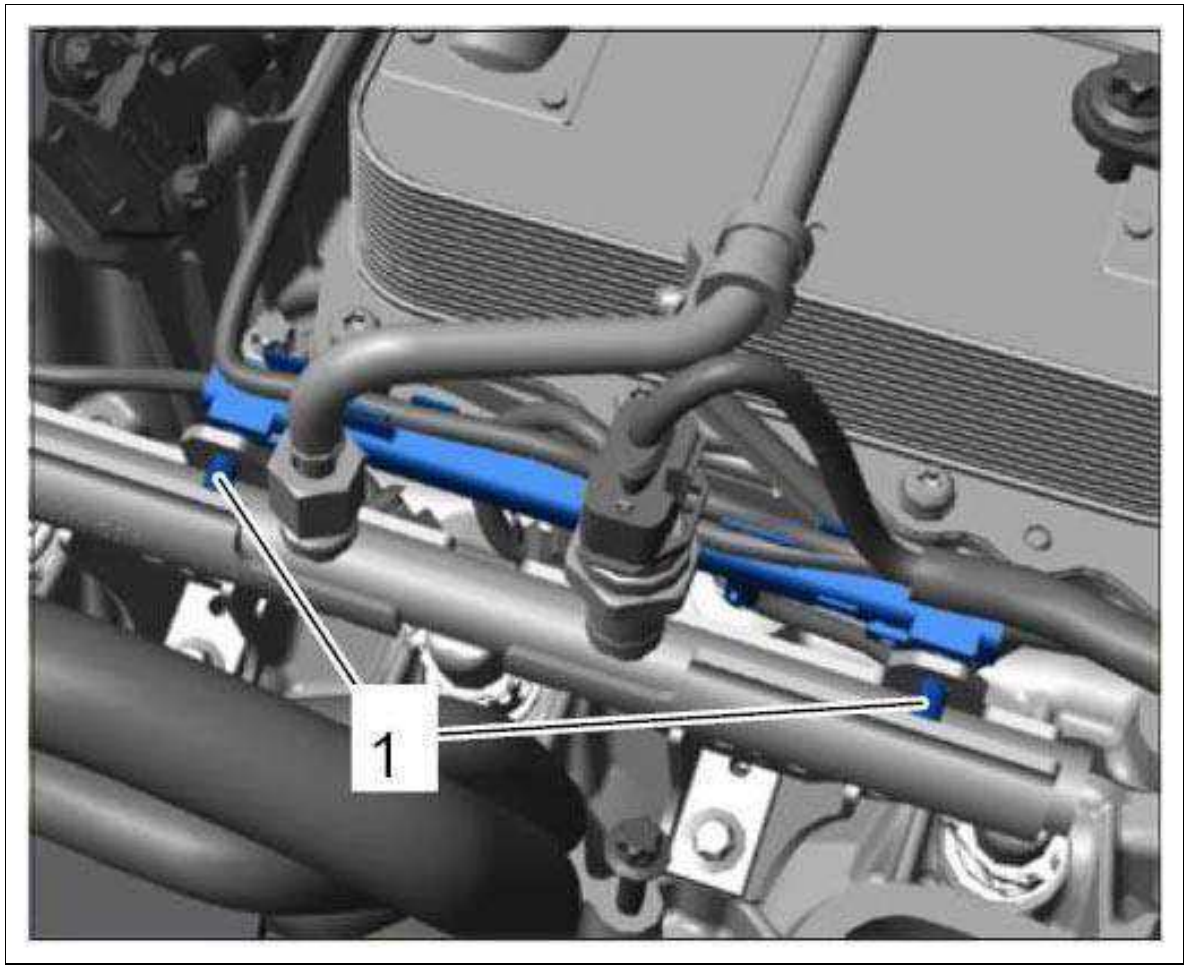

Courtesy of PORSCHE CARS NORTH AMERICA, INC.

5. Secure bracket for fuel line.

    1. 5.1. Swivel the bracket onto the cylinder head.
    2. 5.2. Screw in external Torx screw (E11, M6 x 45) **-1-** and tighten to the specified tightening torque.

       → **Tightening torque: 10 Nm (7.5 ftlb.)**
    3. 5.3. Screw in external Torx screw (E11, M6 x 12) **-2-** and tighten to the specified tightening torque.

       → **Tightening torque: 10 Nm (7.5 ftlb.)**

Fig 4: Identifying High-Pressure Line Bracket

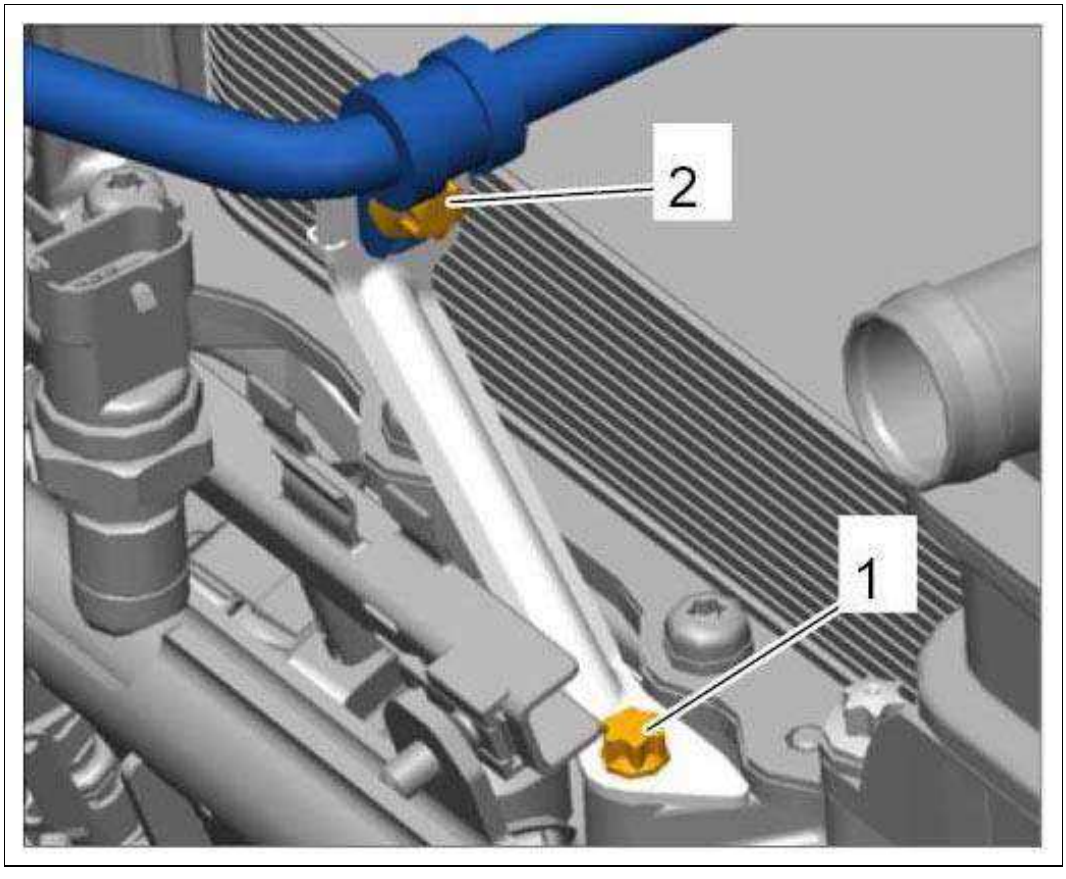

Courtesy of PORSCHE CARS NORTH AMERICA, INC.

WM 287219 REMOVING AND INSTALLING KNOCK SENSOR (EXCEPT CARRERA "EDITION", CARRERA CABRIOLET "EDITION", TURBO, TURBO S, CARRERA 4 "EDITION", TURBO CABRIO, CARRERA 4 CABRIOLET "EDITION", GT3, GT3 RS > SUBSEQUENT WORK

Subsequent work for knock sensor for cylinder bank 1-3:

1. Install the generator. → INSTALLING GENERATOR

   Subsequent work for knock sensor for cylinder bank 4-6:

2. Install intake-air distributor for cylinder bank 4-6. → INSTALLING INTAKE-AIR DISTRIBUTOR

WM 287219 REMOVING AND INSTALLING KNOCK SENSOR (EXCEPT CARRERA "EDITION", CARRERA CABRIOLET "EDITION", TURBO S, CARRERA 4 "EDITION", TURBO CABRIO, TURBO S CABRIO, CARRERA 4 CABRIOLET "EDITION", GT3, GT3 RS > TECHNICAL VALUES

Location	Description	Type	Basic value	Tolerance 1	Tolerance 2
Knock sensor to crankcase	External Torx screw, M8 x 35	Tightening torque	23 Nm (17 ftlb.)	+/-2 Nm (+/- 1.5 ftlb.)	

WM 287219 REMOVING AND INSTALLING KNOCK SENSOR (EXCEPT CARRERA "EDITION", CARRERA CABRIOLET "EDITION", TURBO S, CARRERA 4 "EDITION", TURBO CABRIO, TURBO S CABRIO, CARRERA 4 CABRIOLET "EDITION", GT3, GT3 RS > PRELIMINARY WORK

Preliminary work for knock sensor, cylinder bank 1-3:

1. Remove generator. → REMOVING GENERATOR

   Preliminary work for knock sensor, cylinder bank 4-6:

2. Remove intake-air distributor for cylinder bank 4-6. → REMOVING INTAKE-AIR DISTRIBUTOR - BANK 4-6

WM 287219 REMOVING AND INSTALLING KNOCK SENSOR (EXCEPT CARRERA "EDITION", CARRERA CABRIOLET "EDITION", TURBO S, CARRERA 4 "EDITION", TURBO CABRIO, TURBO S CABRIO, CARRERA 4 CABRIOLET "EDITION", GT3, GT3 RS > REMOVING KNOCK SENSOR > REMOVING KNOCK SENSOR FOR CYLINDER BANK 1-3

Information

Before removing the knock sensor, mark the installation position using a water-resistant marker.

1. Remove knock sensor for cylinder bank 1-3.

   1. 1.1. Mark installation position of the knock sensor **-2-** .

   2. 1.2. Unscrew fastening screw **-1-** .

Fig 1: Identifying Knock Sensor For Cylinder Bank 1-3

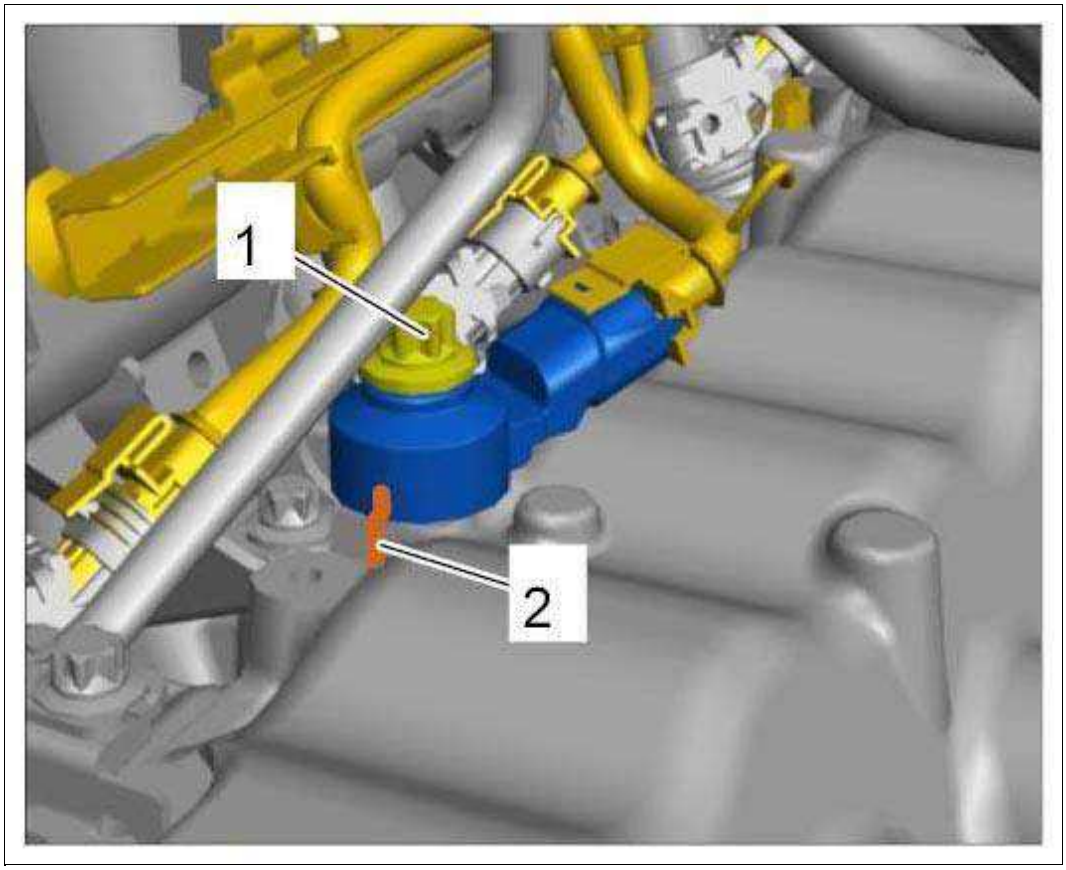

Courtesy of PORSCHE CARS NORTH AMERICA, INC.

2. Disconnect plug connection.

    1. 2.1. Release plug connection **-a-** and disconnect knock sensor **-B-** .

Fig 2: Disconnecting Plug Connection

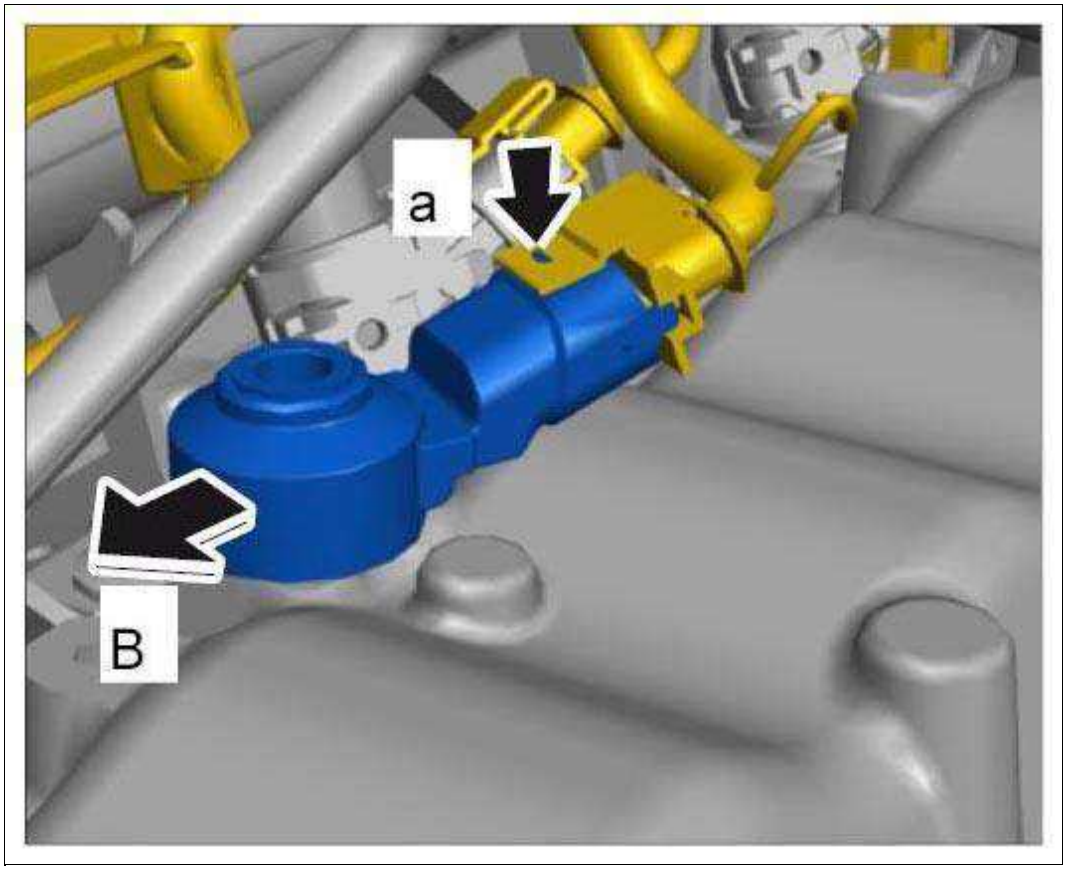

Courtesy of PORSCHE CARS NORTH AMERICA, INC.

WM 287219 REMOVING AND INSTALLING KNOCK SENSOR (EXCEPT CARRERA "EDITION", CARRERA CABRIOLET "EDITION", TURBO S, CARRERA 4 "EDITION", TURBO CABRIO, TURBO S CABRIO, CARRERA 4 CABRIOLET "EDITION", GT3, GT3 RS > REMOVING KNOCK SENSOR > REMOVING KNOCK SENSOR FOR CYLINDER BANK 4-6

Information

Before removing the knock sensor, mark the installation position using a water-resistant marker.

1. Loosen spring band clamp **-1-** , pull off oil supply line **-2-** and press it aside.

Fig 1: Identifying Oil Tank Oil Supply Line

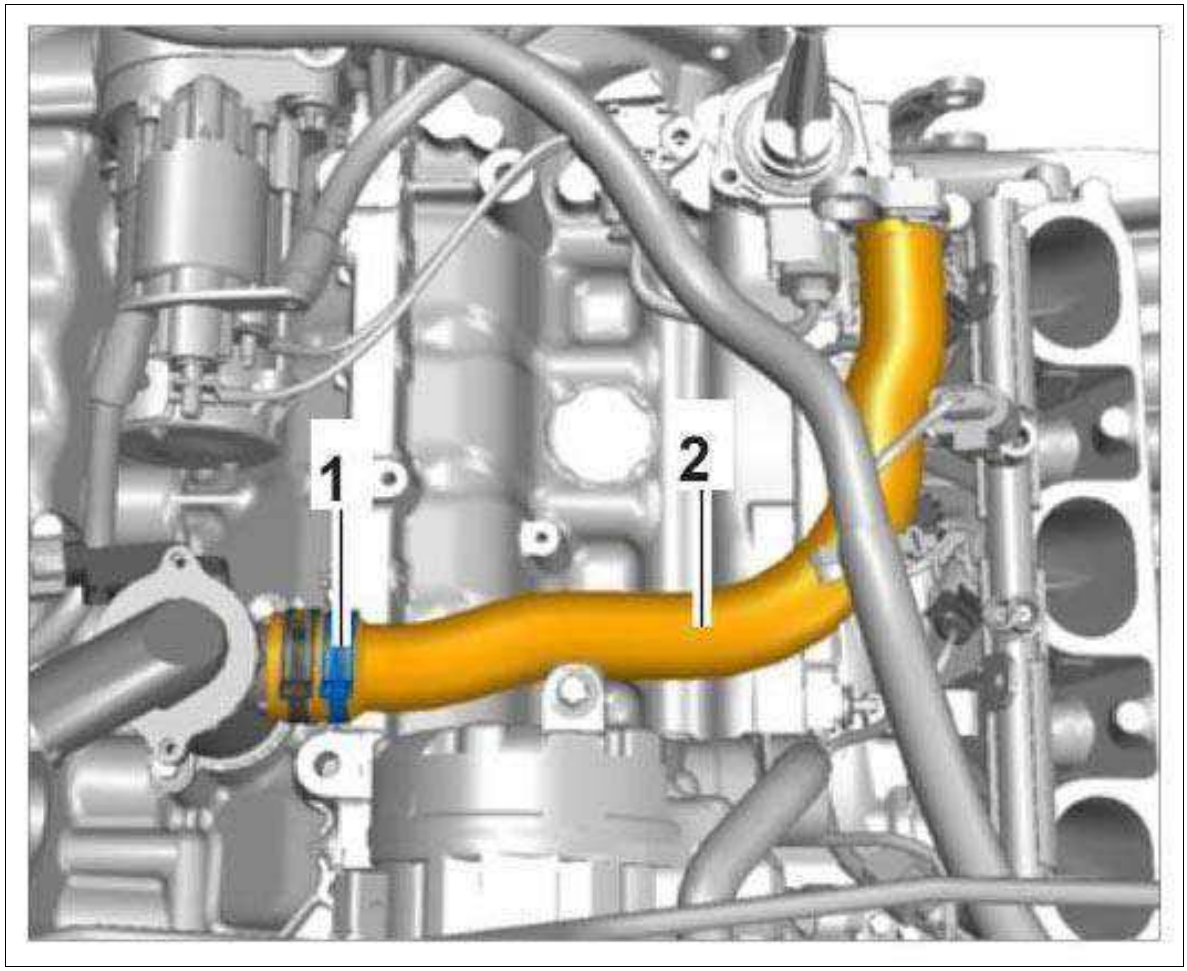

Courtesy of PORSCHE CARS NORTH AMERICA, INC.

2. Remove knock sensor for cylinder bank 4-6.

    1. 2.1. Mark installation position of the knock sensor **-2-** .
    2. 2.2. Unscrew fastening screw **-1-** .

Fig 2: Identifying Knock Sensor For Cylinder Bank 4-6

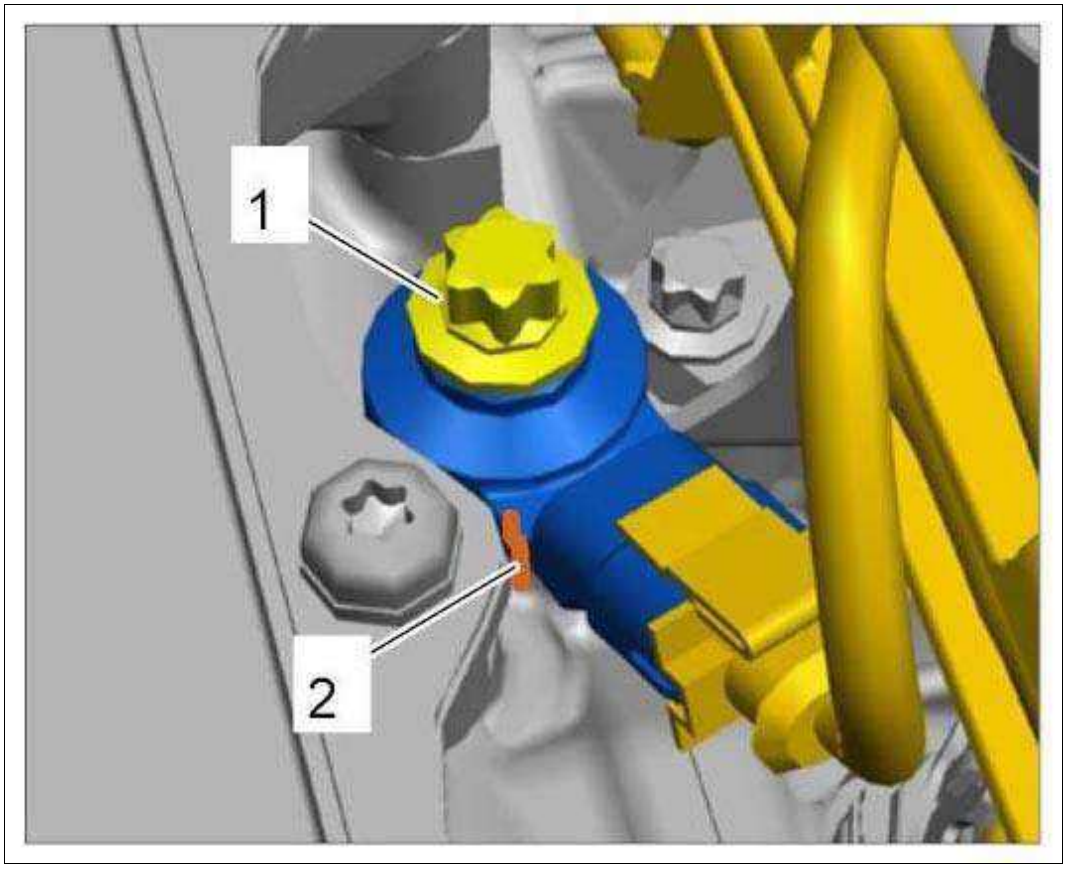

Courtesy of PORSCHE CARS NORTH AMERICA, INC.

3. Disconnect plug connection.

    1. 3.1. Release plug connection **-a-** and pull off the knock sensor **-B-** .

Fig 3: Disconnecting Plug Connection

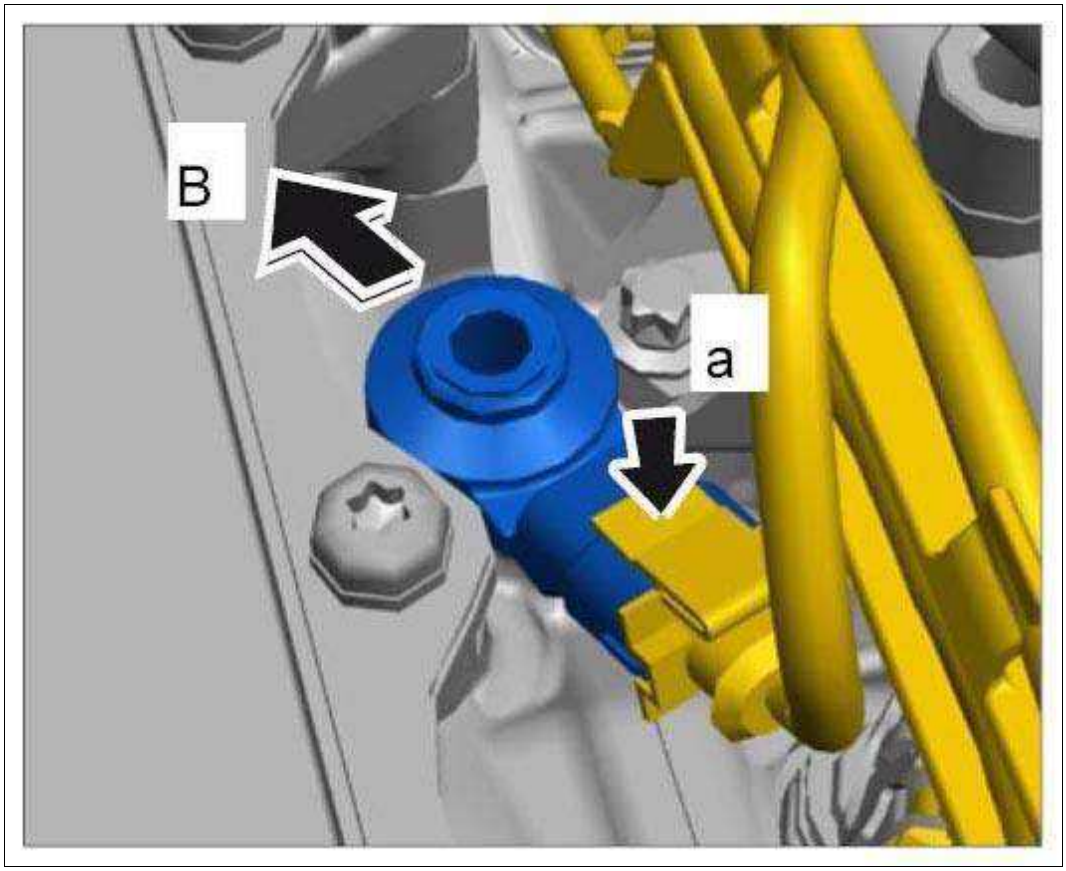

Courtesy of PORSCHE CARS NORTH AMERICA, INC.

WM 287219 REMOVING AND INSTALLING KNOCK SENSOR (EXCEPT CARRERA "EDITION", CARRERA CABRIOLET "EDITION", TURBO S, CARRERA 4 "EDITION", TURBO CABRIO, TURBO S CABRIO, CARRERA 4 CABRIOLET "EDITION", GT3, GT3 RS > INSTALLING KNOCK SENSOR > INSTALLING KNOCK SENSOR FOR CYLINDER BANK 1-3

1. Install knock sensor.

    1. 1.1. Move knock sensor to the previously marked installation position **-2-** .
    2. 1.2. Screw in and tighten fastening screw **-1-** .

    Tightening torque 23 Nm (17 ftlb.) +/-2 Nm (+/-1.5 ftlb.)

Fig 1: Identifying Knock Sensor For Cylinder Bank 1-3

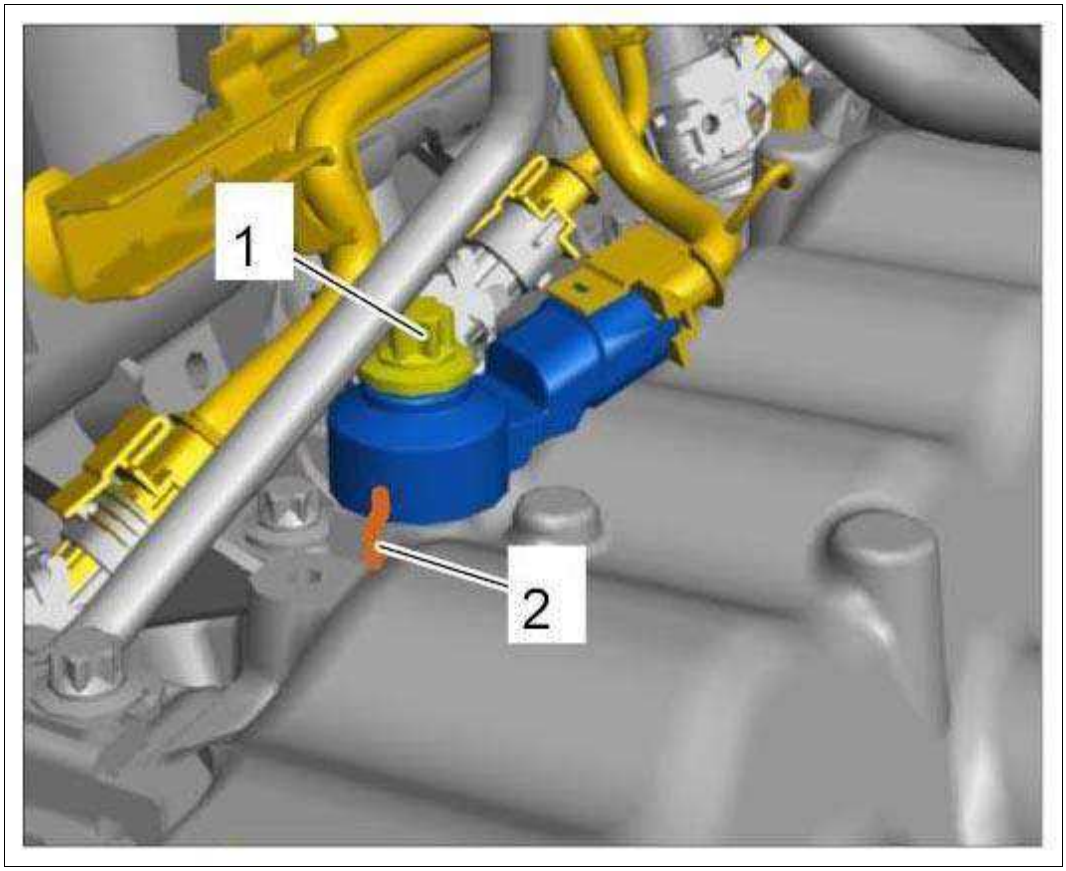

Courtesy of PORSCHE CARS NORTH AMERICA, INC.

2. Connect electric plug connection at the knock sensor.

WM 287219 REMOVING AND INSTALLING KNOCK SENSOR (EXCEPT CARRERA "EDITION", CARRERA CABRIOLET "EDITION", TURBO S, CARRERA 4 "EDITION", TURBO CABRIO, TURBO S CABRIO, CARRERA 4 CABRIOLET "EDITION", GT3, GT3 RS > INSTALLING KNOCK SENSOR > INSTALLING KNOCK SENSOR FOR CYLINDER BANK 4-6

1. Install knock sensor.

    1. 1.1. Move knock sensor to the previously marked installation position **-2-** .
    2. 1.2. Screw in and tighten fastening screw **-1-** .

    Tightening torque 23 Nm (17 ftlb.) +/-2 Nm (+/-1.5 ftlb.)

Fig 1: Identifying Knock Sensor For Cylinder Bank 4-6

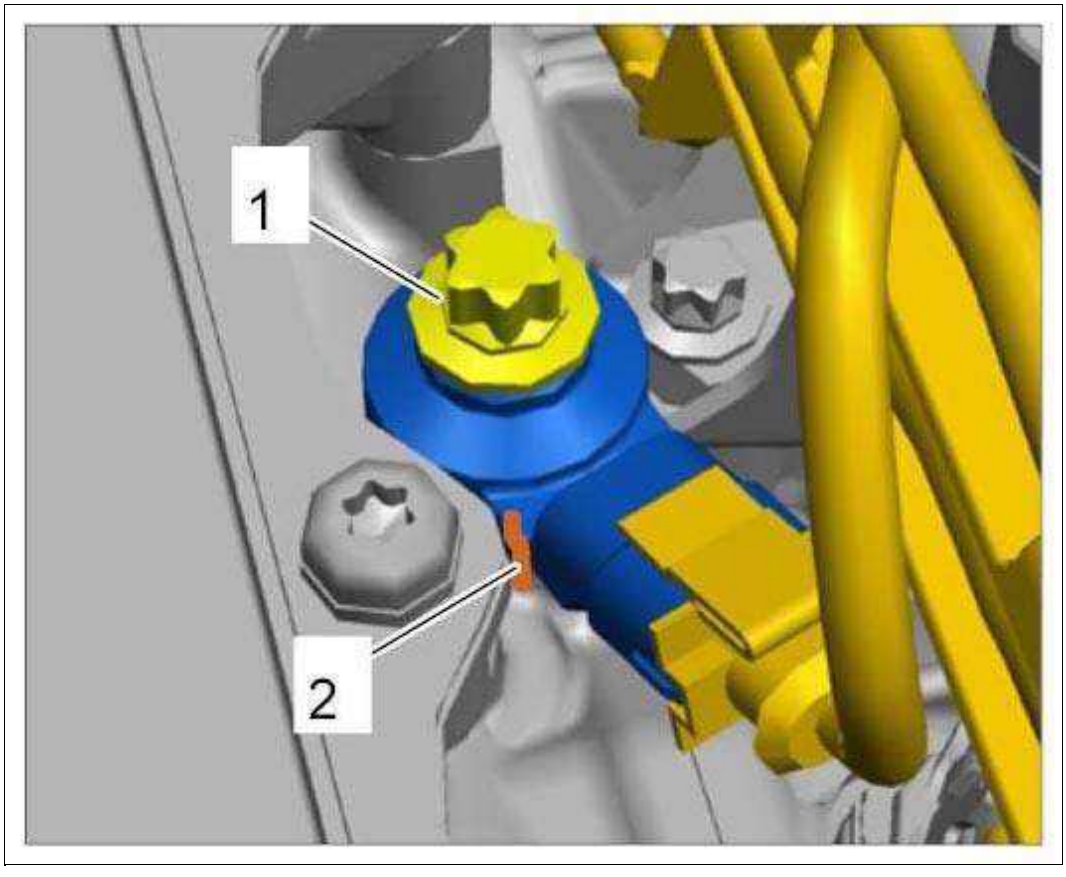

Courtesy of PORSCHE CARS NORTH AMERICA, INC.

2. Connect electric plug connection at the knock sensor.

WM 287219 REMOVING AND INSTALLING KNOCK SENSOR (EXCEPT CARRERA "EDITION", CARRERA CABRIOLET "EDITION", TURBO S, CARRERA 4 "EDITION", TURBO CABRIO, TURBO S CABRIO, CARRERA 4 CABRIOLET "EDITION", GT3, GT3 RS > SUBSEQUENT WORK

Subsequent work for knock sensor for cylinder bank 1-3:

1. Install generator. → INSTALLING GENERATOR

Subsequent work for knock sensor for cylinder bank 4-6:

2. Install intake-air distributor for cylinder bank 4-6. → INSTALLING INTAKE-AIR DISTRIBUTOR - SIDE 4-6

WM 287319 REMOVING AND INSTALLING PULSE SENDER (EXCEPT CARRERA, CARRERA S, CARRERA "EDITION", CARRERA 4 "EDITION", CARRERA 4 CABRIOLET "EDITION", GT3, GT3 RS > TECHNICAL VALUES

Location	Description	Type	Basic value	Tolerance 1	Tolerance 2
Pulse sender	Screw, M6 x 16	Tightening	10 Nm (7.5		

(speed sender) to transmission	torque	ftlb.)

WM 287319 REMOVING AND INSTALLING PULSE SENDER (EXCEPT CARRERA, CARRERA S, CARRERA "EDITION", CARRERA 4 "EDITION", CARRERA 4 CABRIOLET "EDITION", GT3, GT3 RS > PRELIMINARY WORK

1. On Cabriolet vehicles: Remove support plate.

   → REMOVING SUPPORT PLATE .

2. Remove rear underbody panel. → REMOVING COVER FOR REAR UNDERBODY

WM 287319 REMOVING AND INSTALLING PULSE SENDER (EXCEPT CARRERA, CARRERA S, CARRERA "EDITION", CARRERA 4 "EDITION", CARRERA 4 CABRIOLET "EDITION", GT3, GT3 RS > REMOVING PULSE SENDER

Fig 1: Identifying Pulse Sender Position

Courtesy of PORSCHE CARS NORTH AMERICA, INC.

1. Release the vacuum line **-A-** , pull it off **-B-** and set it aside.

Fig 2: Disconnecting Vacuum Line

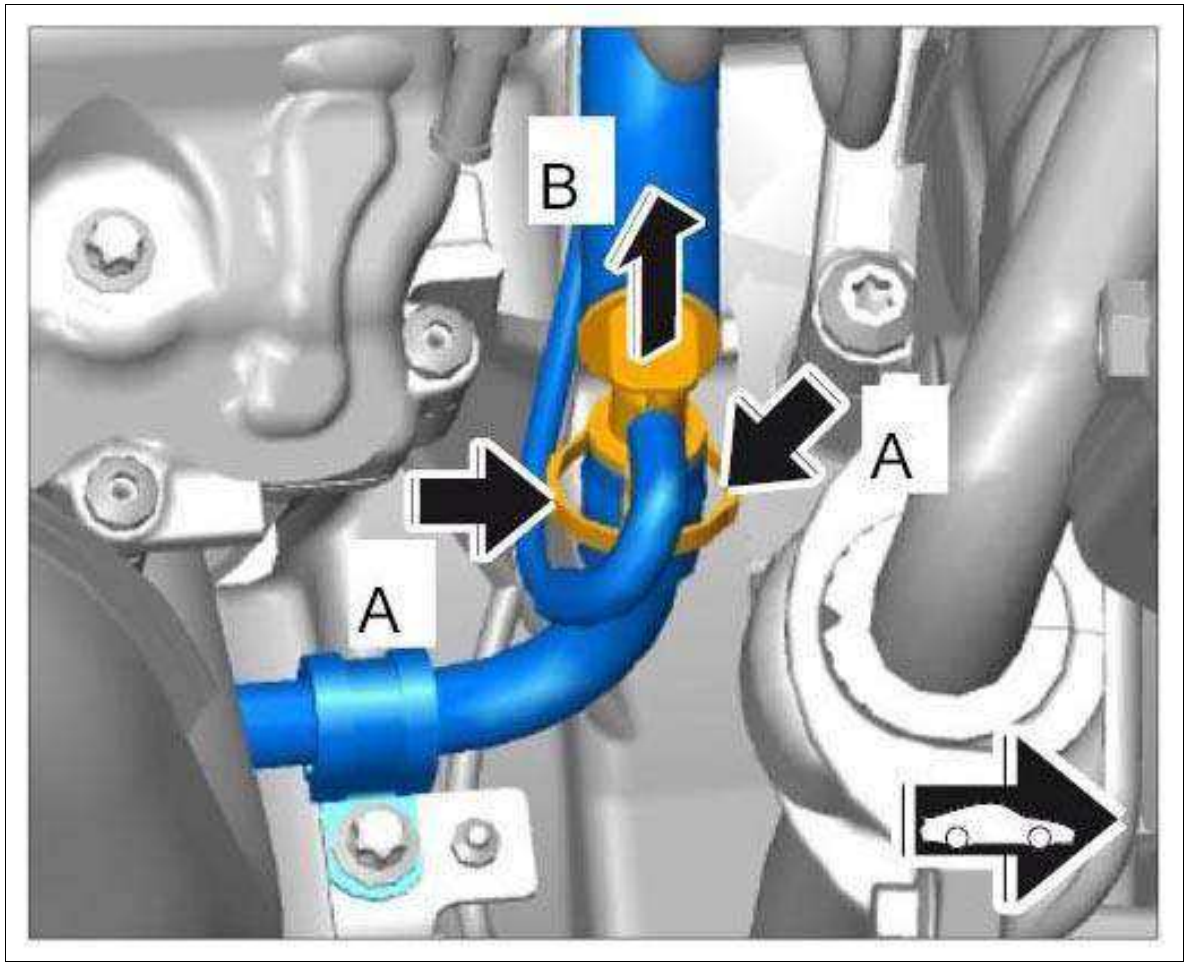

Courtesy of PORSCHE CARS NORTH AMERICA, INC.

2. Disconnect plug connection for pulse sender.

    1. 2.1. Unlock the plug connection **-a-** and pull it off **-B-** .

Fig 3: Disconnecting Plug Connection

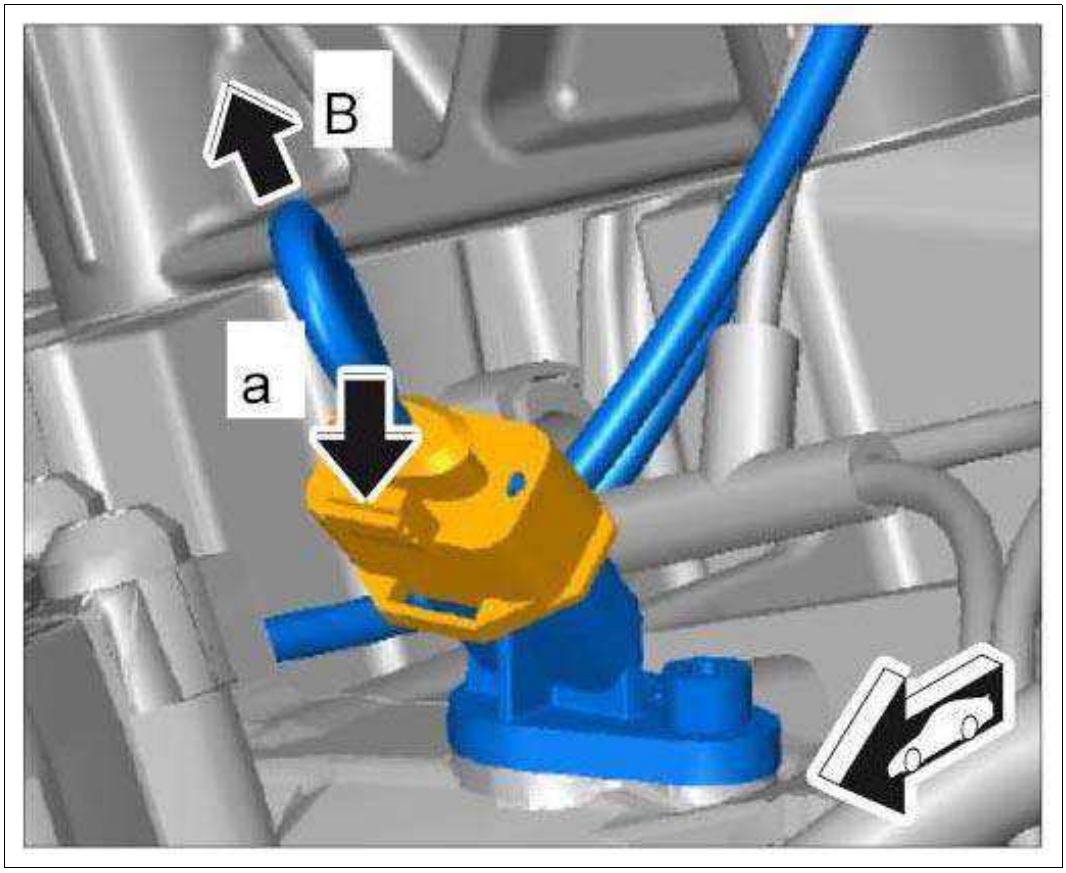

Courtesy of PORSCHE CARS NORTH AMERICA, INC.

3. Remove pulse sender.

Be careful with the spacer as this must always be re-installed!

1. 3.1. Unscrew internal Torx screw (M6 x 16) **-1-** .
2. 3.2. Take the pulse sender out of the transmission housing.

Fig 4: Identifying Pulse Sender Screws

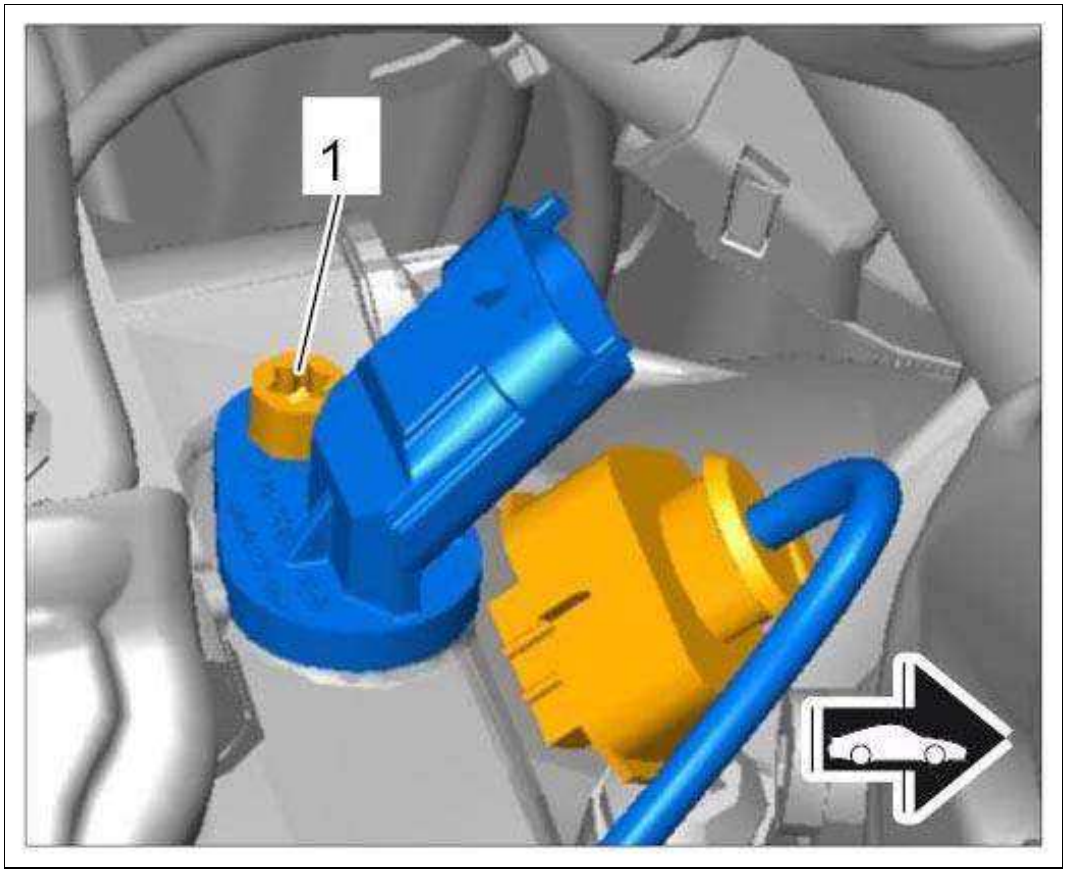

Courtesy of PORSCHE CARS NORTH AMERICA, INC.

WM 287319 REMOVING AND INSTALLING PULSE SENDER (EXCEPT CARRERA, CARRERA S, CARRERA "EDITION", CARRERA 4 "EDITION", CARRERA 4 CABRIOLET "EDITION", GT3, GT3 RS > INSTALLING PULSE SENDER

1. Fit spacer on the pulse sender.

   If there was no spacer installed during removal, always retrofit the spacer!

   Do not use grease, oil or adhesive!

Fig 1: Identifying Pulse Sender Spacer

Courtesy of PORSCHE CARS NORTH AMERICA, INC.

2. Install pulse sender.

    1. 2.1. Fit pulse sender into the transmission housing.
    2. 2.2. Fit and tighten internal Torx screw (M6 x 16) **-1-** .

    Tightening torque 10 Nm (7.5 ftlb.)

Fig 2: Identifying Pulse Sender Screws

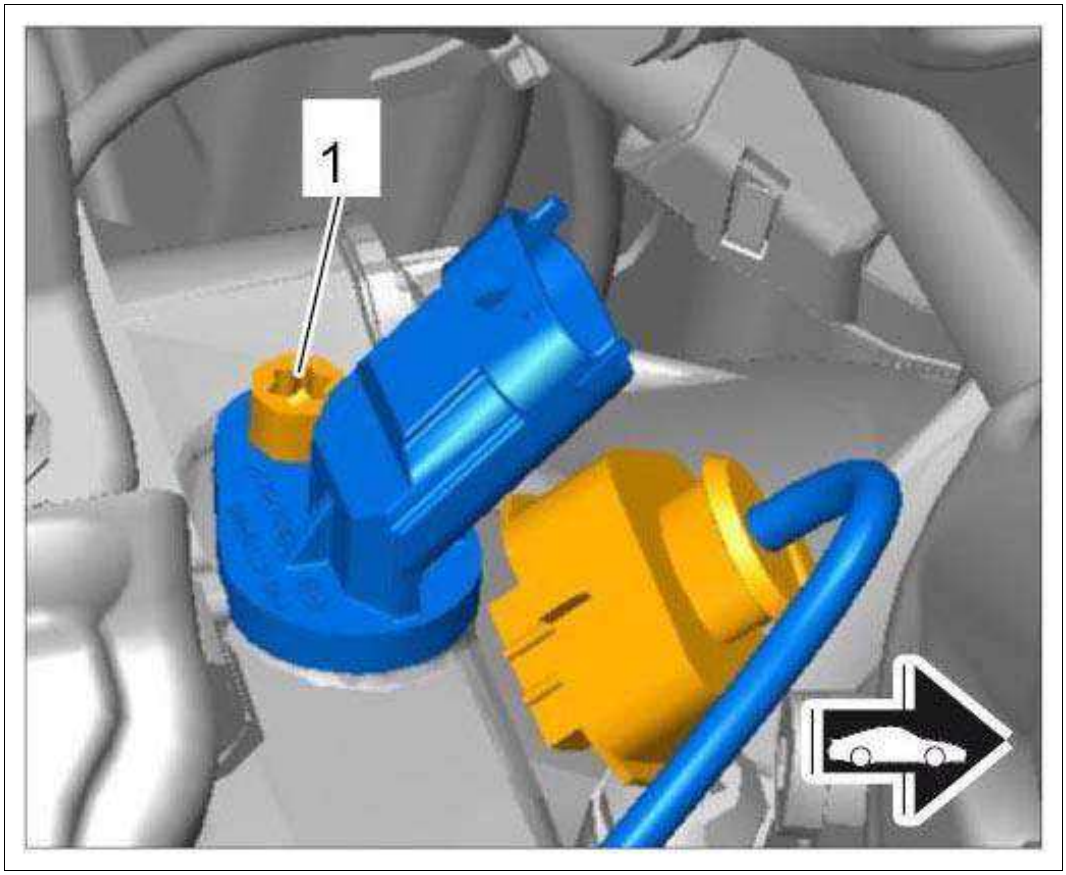

Courtesy of PORSCHE CARS NORTH AMERICA, INC.

3. Plug in plug connection for pulse sender.

    1. 3.1. Connect plug connection **-arrow-** and check that it is seated securely.

Fig 3: Connecting Plug Connection

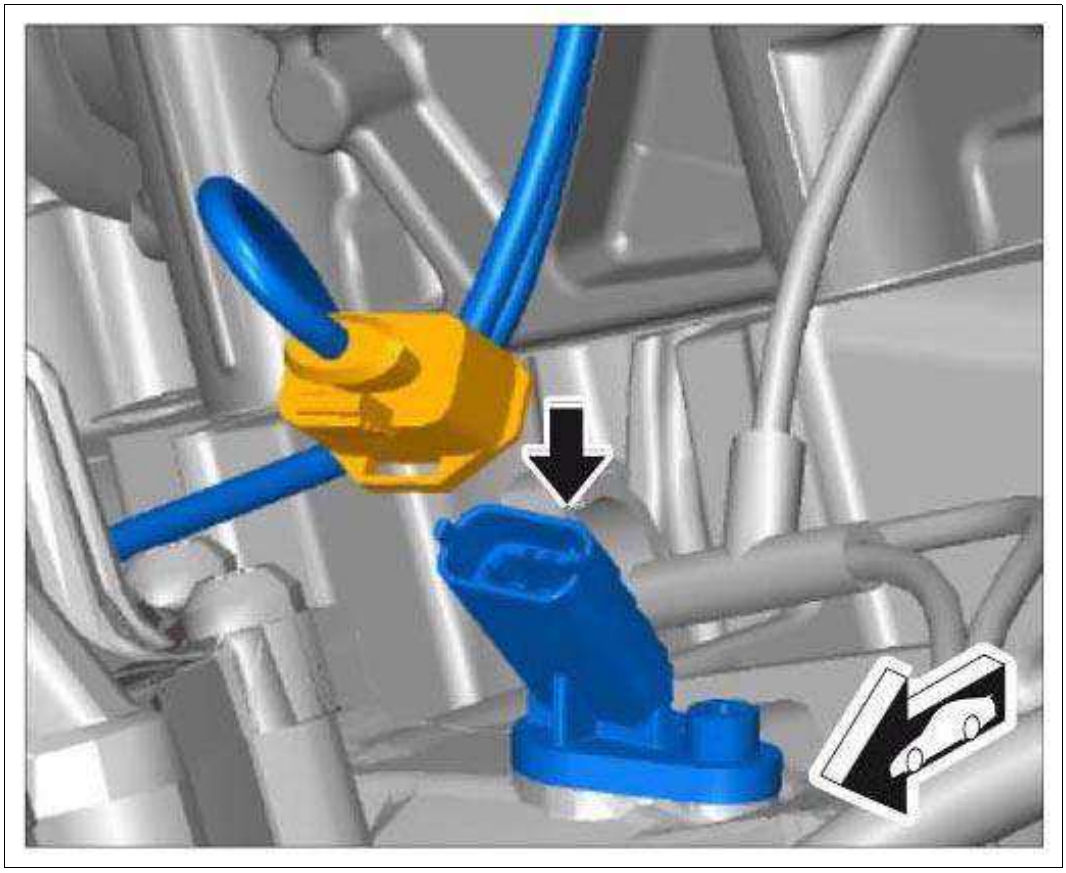

Courtesy of PORSCHE CARS NORTH AMERICA, INC.

4. Connect the vacuum line **-arrow-** until it engages securely.

Fig 4: Connecting Vacuum Line

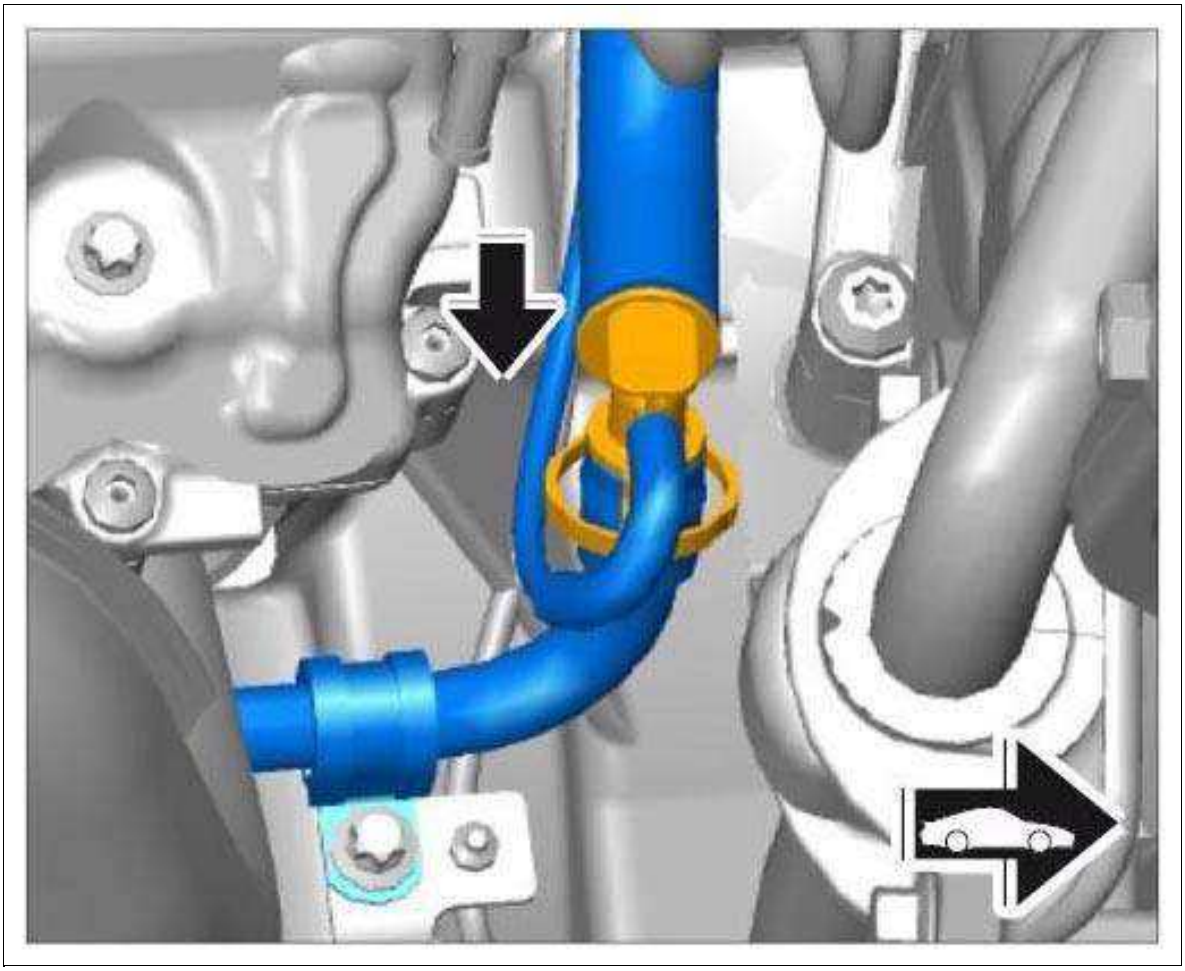

Courtesy of PORSCHE CARS NORTH AMERICA, INC.

WM 287319 REMOVING AND INSTALLING PULSE SENDER (EXCEPT CARRERA, CARRERA S, CARRERA "EDITION", CARRERA 4 "EDITION", CARRERA 4 CABRIOLET "EDITION", GT3, GT3 RS > SUBSEQUENT WORK

1. Install rear underbody panel, → INSTALLING COVER FOR REAR UNDERBODY
2. On Cabriolet vehicles: Install support plate.

   → INSTALLING SUPPORT PLATE .

ACTIVE BODYWORKS

Fig 1: Active Bodyworks Circuit

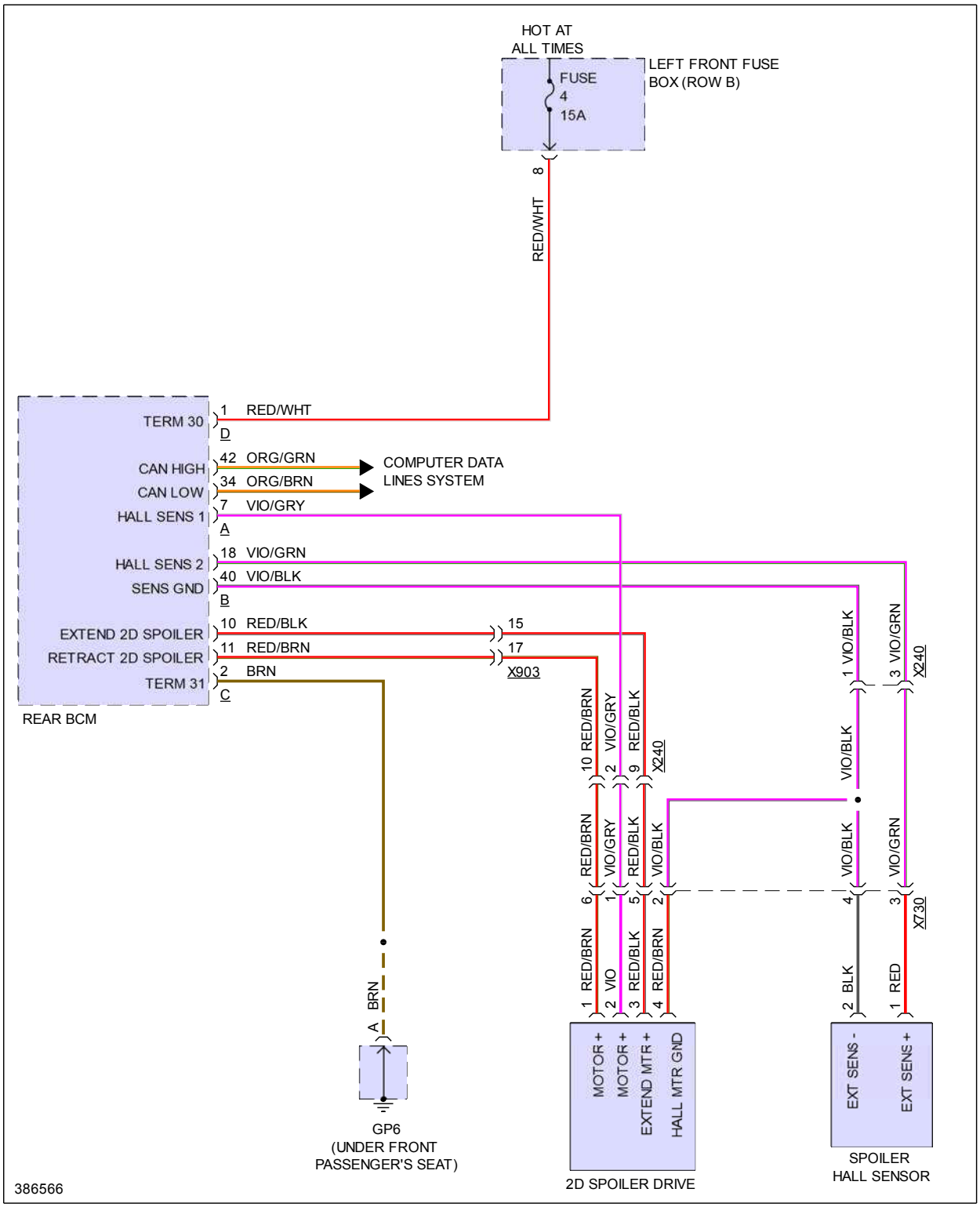

AIR CONDITIONING

Fig 1: Automatic A/C Circuit, W/ Turbo (1 of 2)

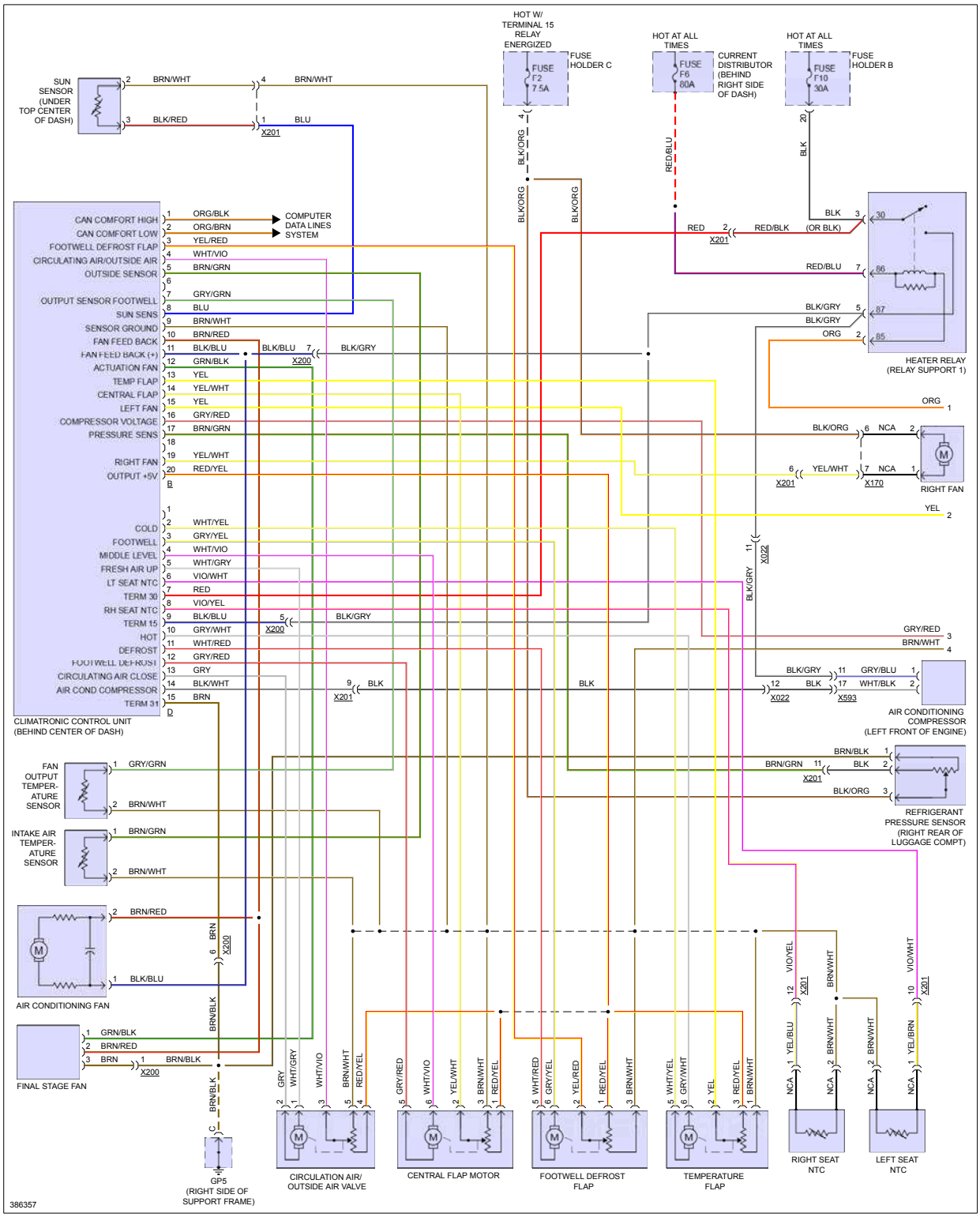

Fig 2: Automatic A/C Circuit, W/ Turbo (2 of 2)

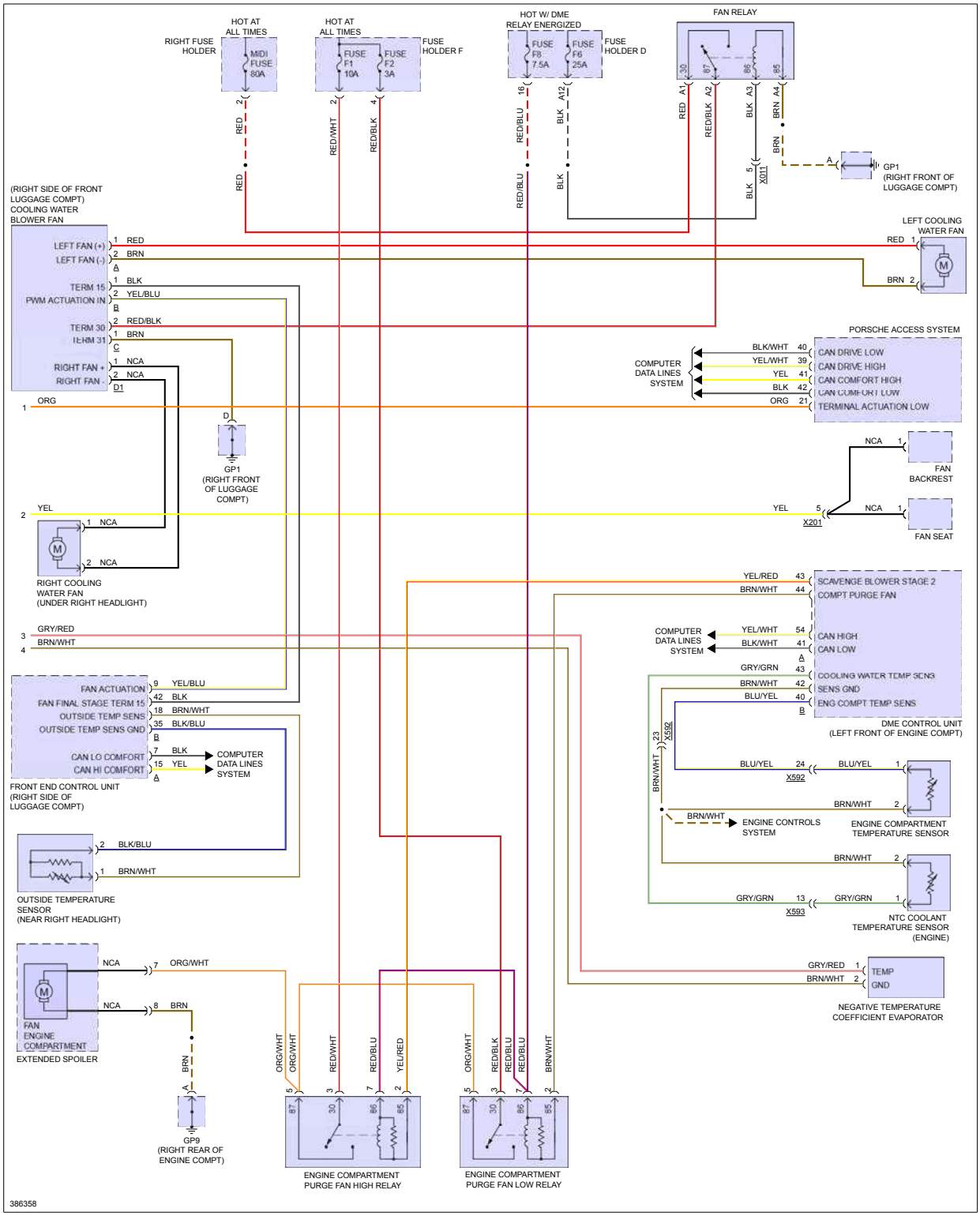

Fig 3: Automatic A/C Circuit, W/O Turbo (1 of 3)

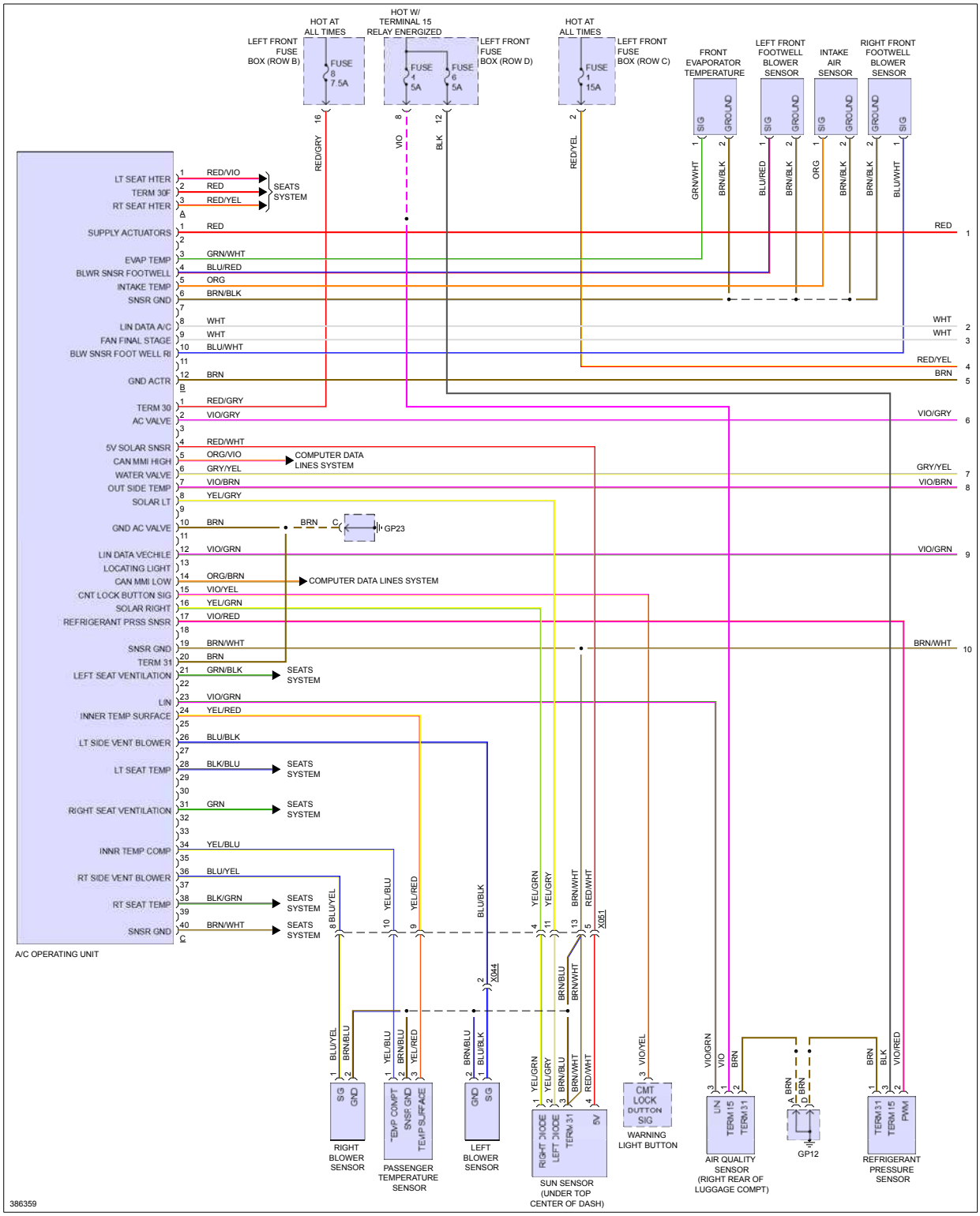

Fig 4: Automatic A/C Circuit, W/O Turbo (2 of 3)

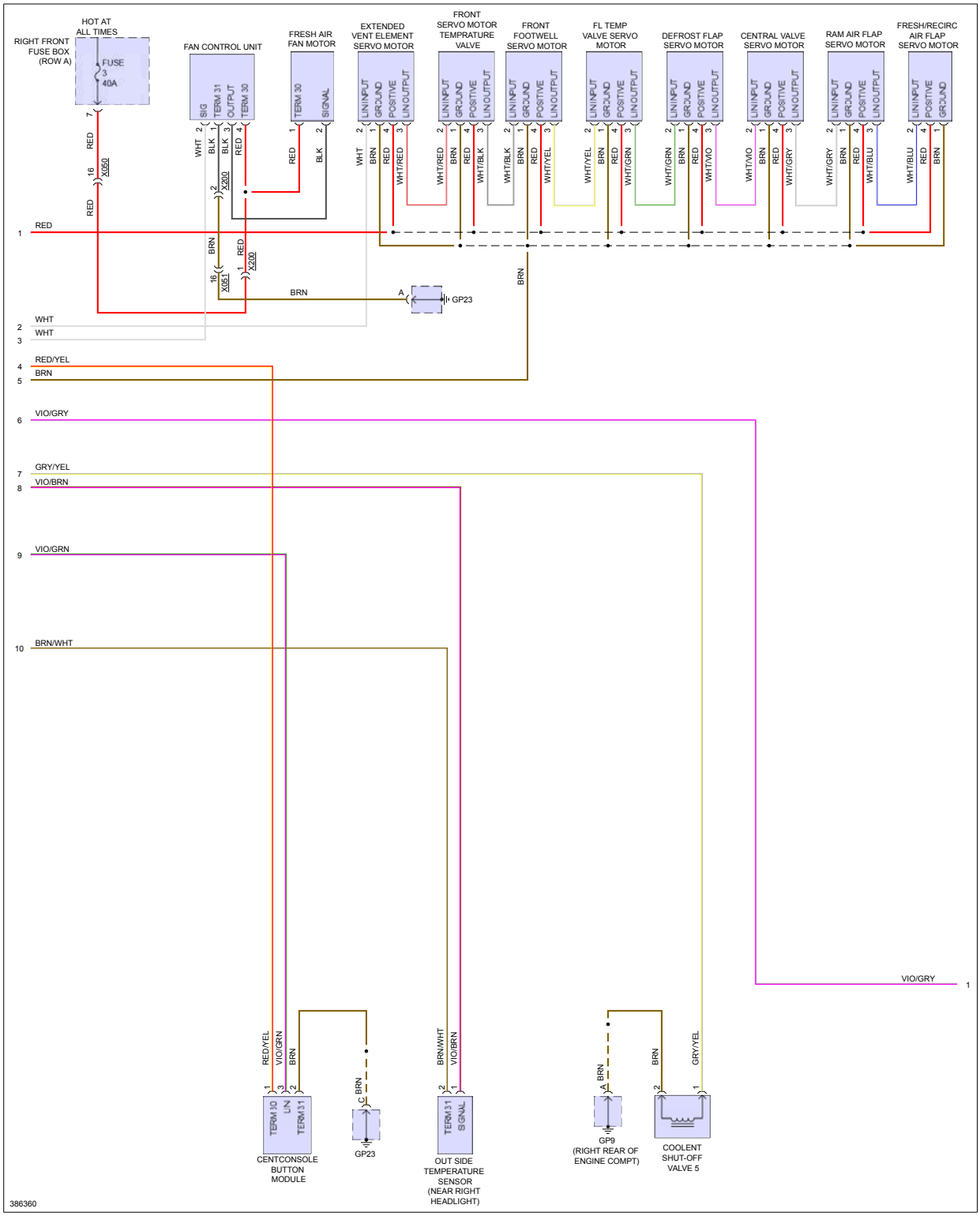

Fig 5: Automatic A/C Circuit, W/O Turbo (3 of 3)

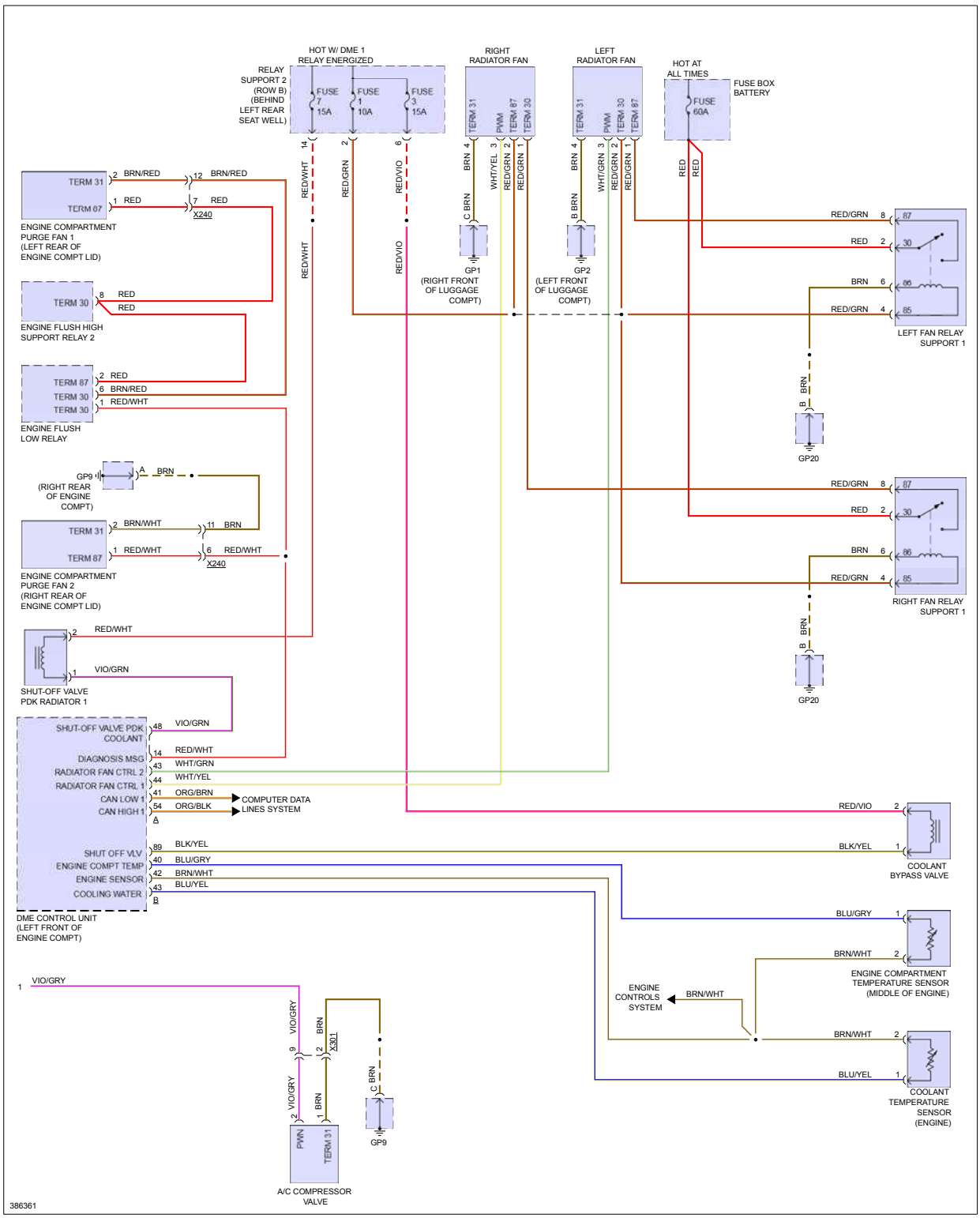

ANTI-LOCK BRAKES

Fig 1: Anti-lock Brakes Circuit, W/ Turbo

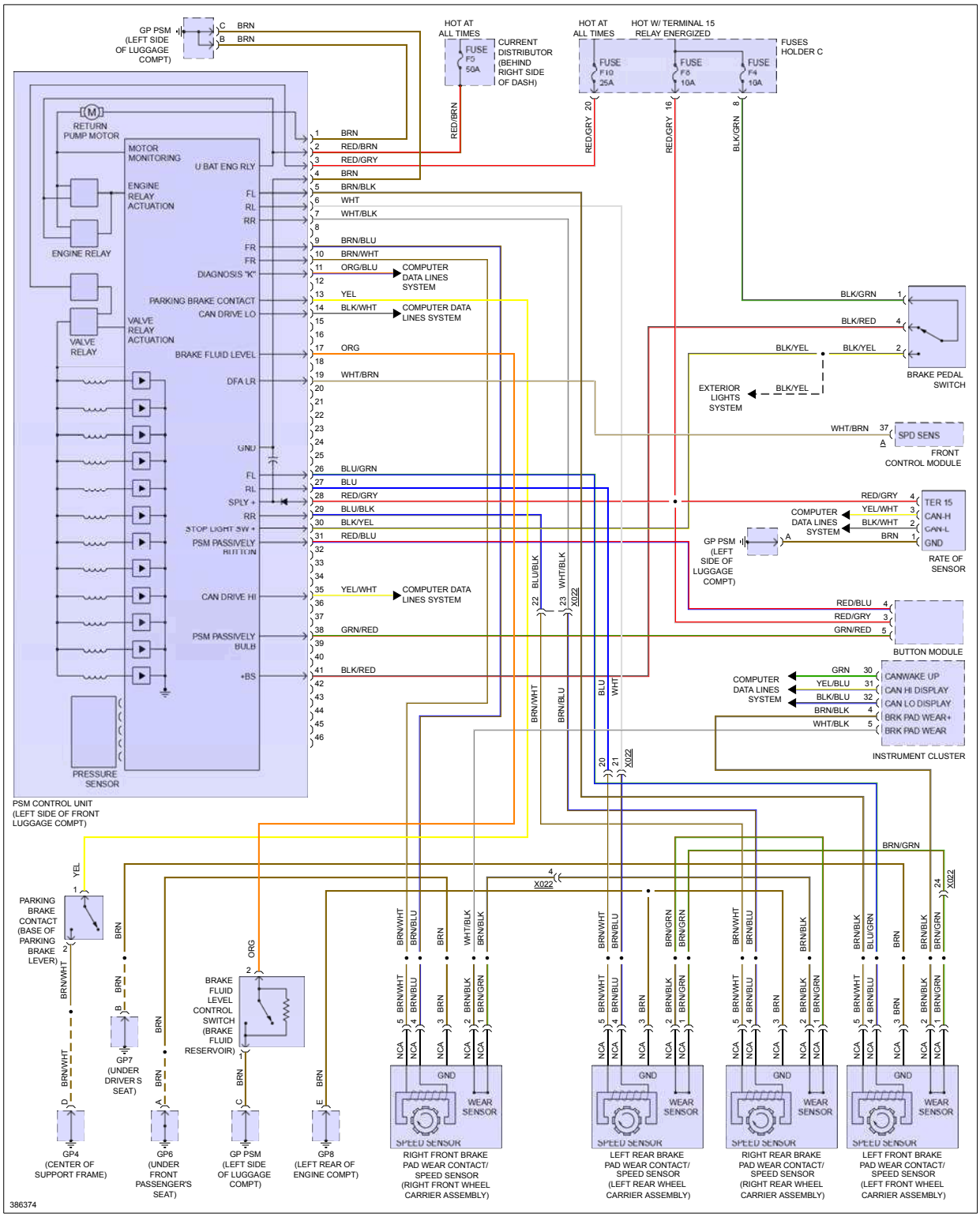

Fig 2: Anti-lock Brakes Circuit, W/O Turbo

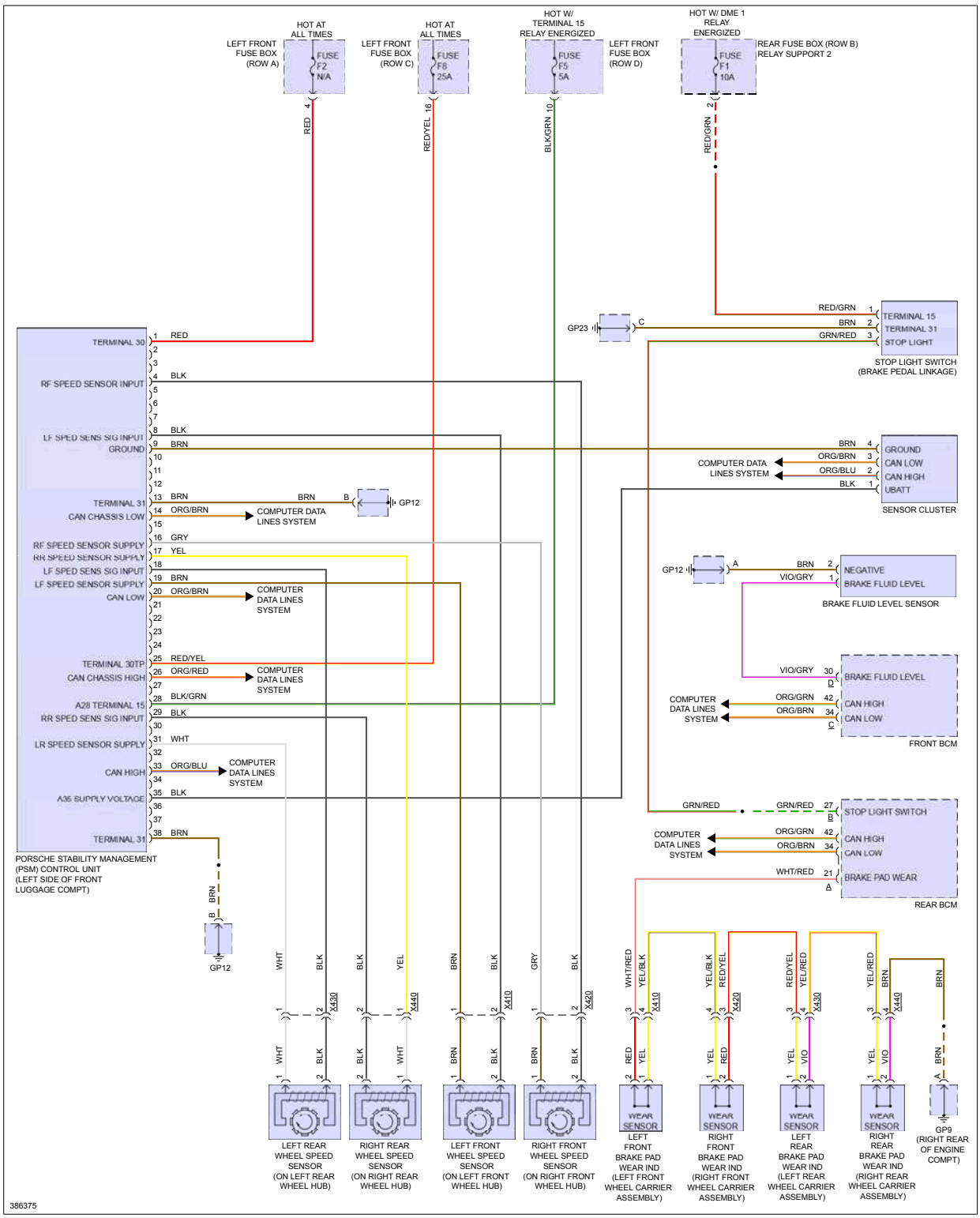

ANTI-THEFT

Fig 1: Anti-theft Circuit, W/ Turbo (1 of 2)

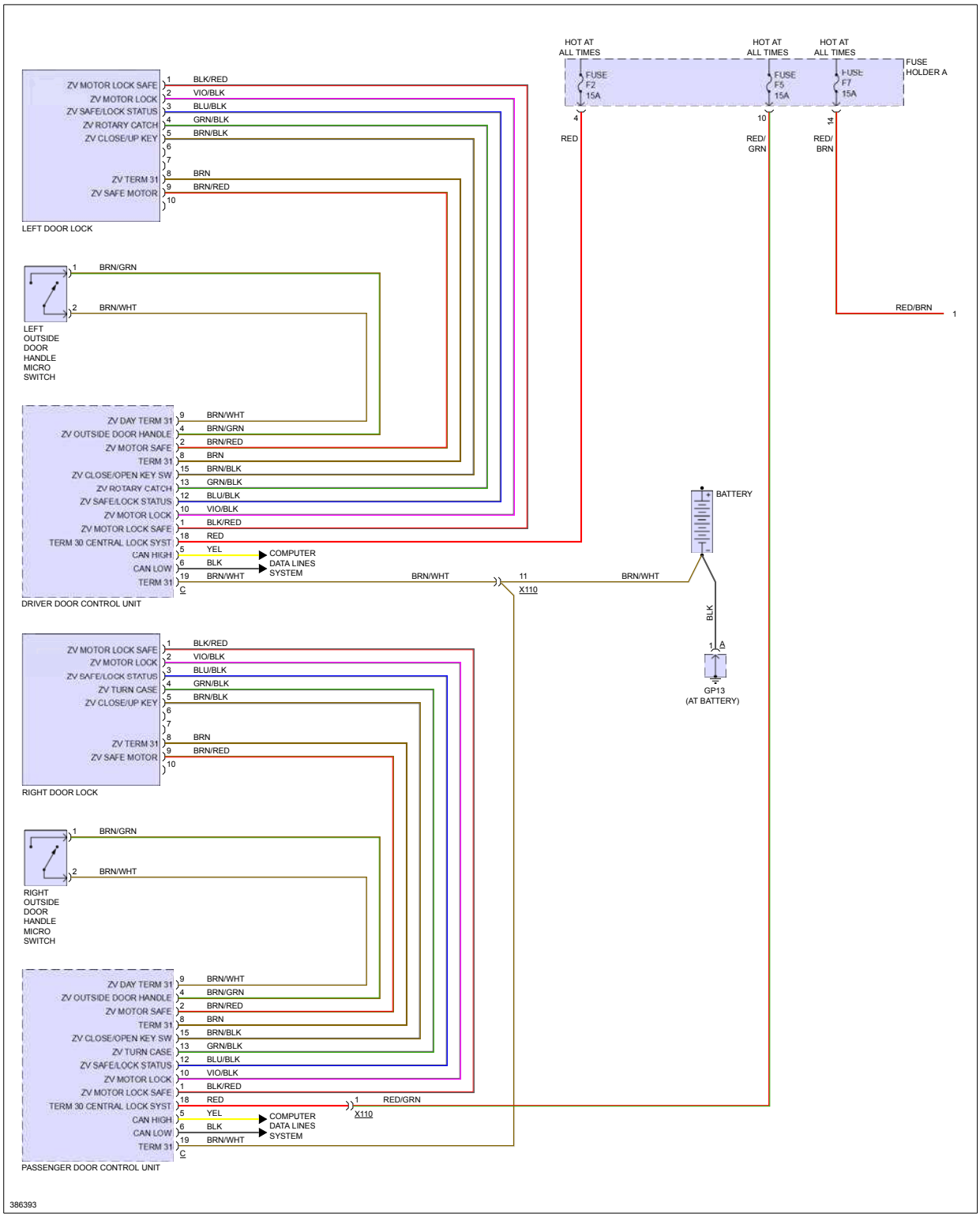

Fig 2: Anti-theft Circuit, W/ Turbo (2 of 2)

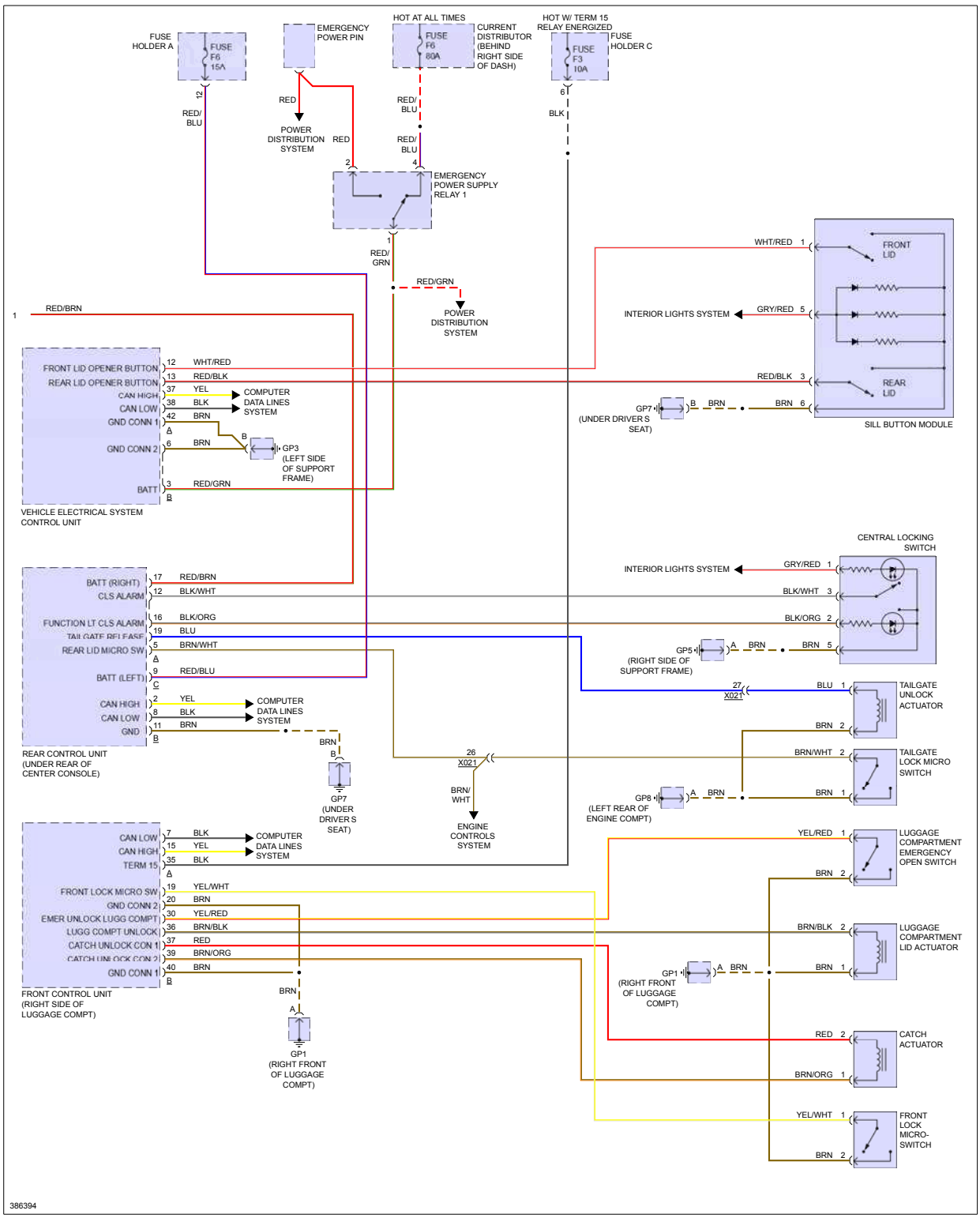

Fig 3: Anti-theft Circuit, W/O Turbo (1 of 2)

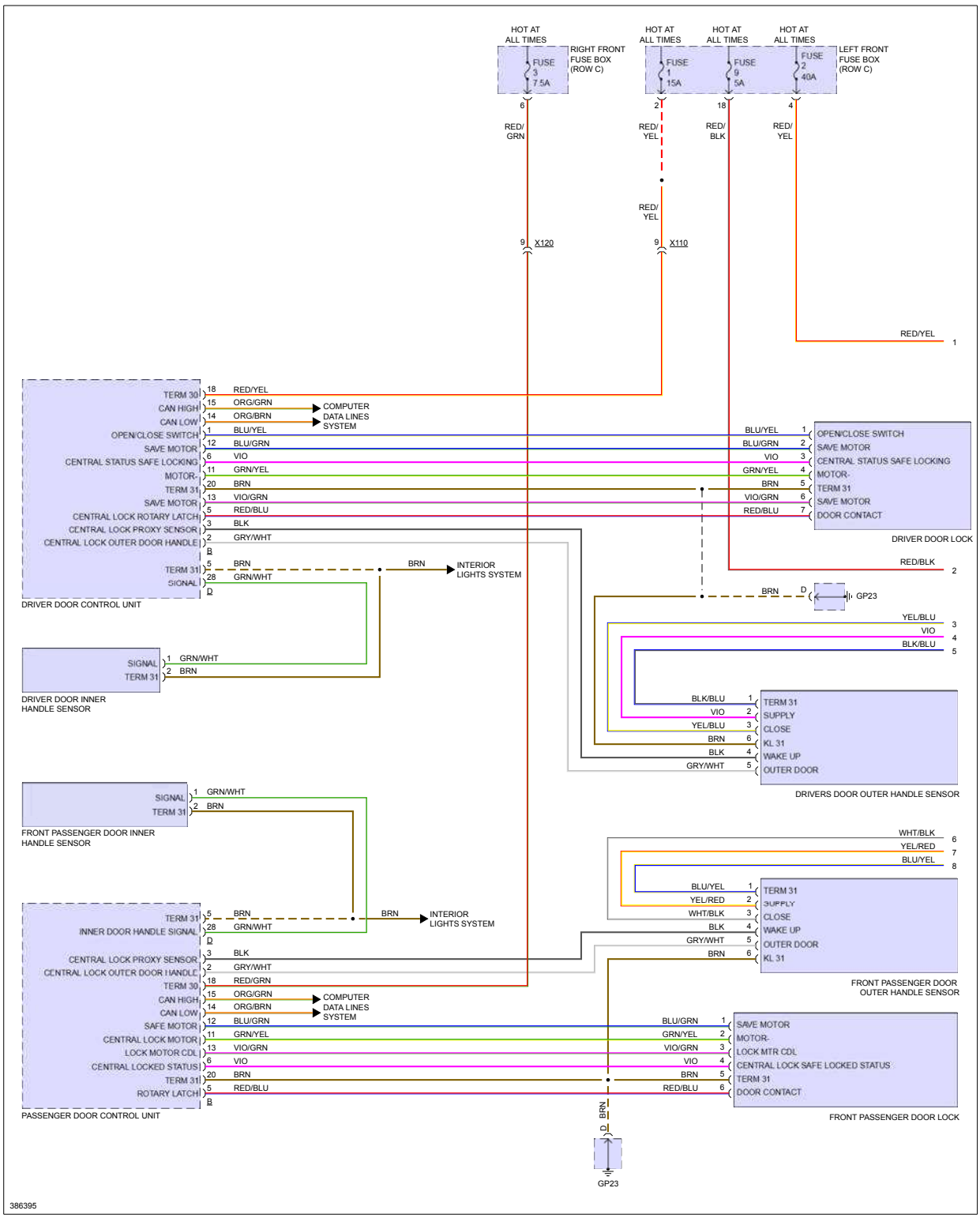

Fig 4: Anti-theft Circuit, W/O Turbo (2 of 2)

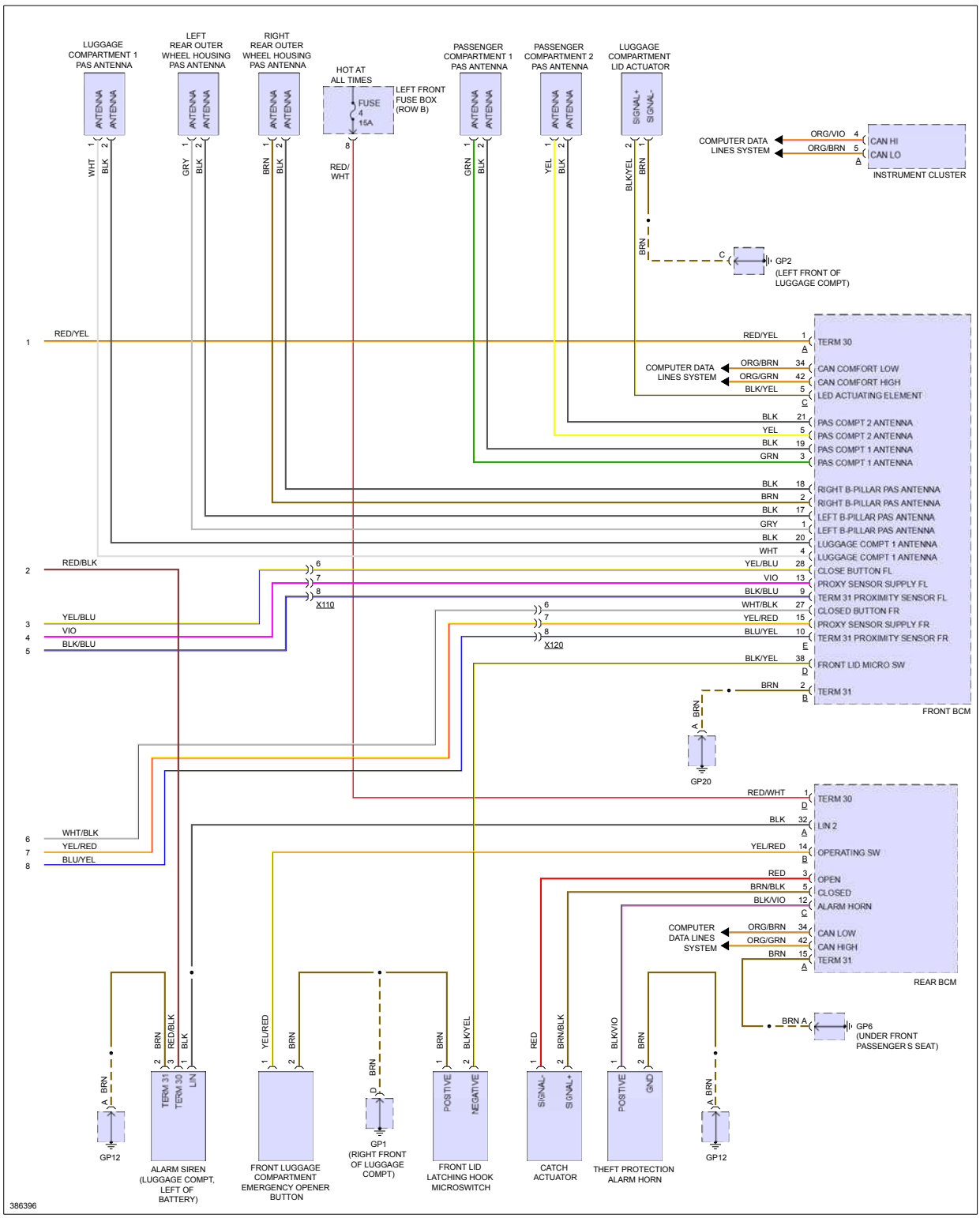

BODY CONTROL MODULES

Fig 1: Front Controller Circuit, W/ Turbo

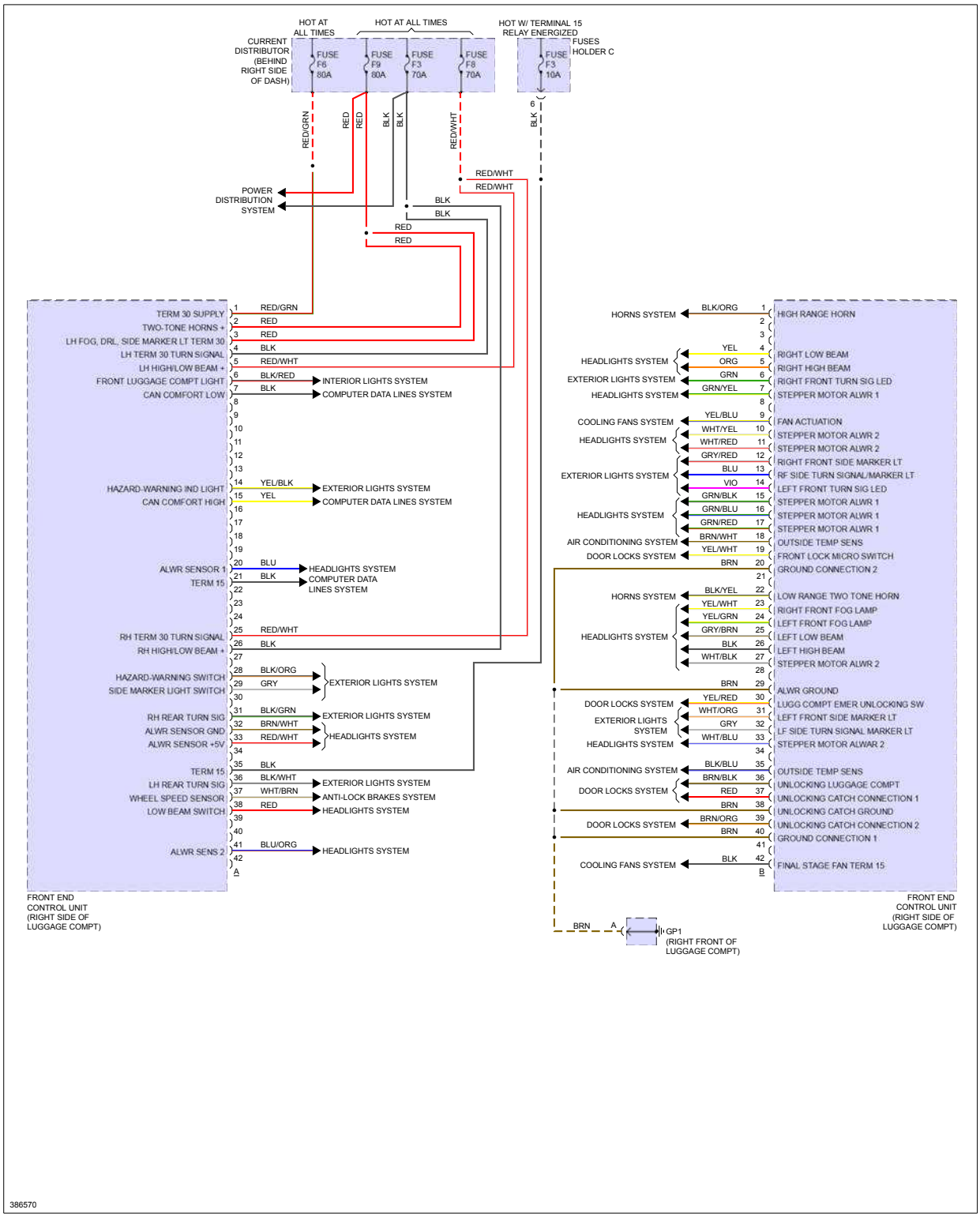

Fig 2: Front Controller Circuit, W/O Turbo

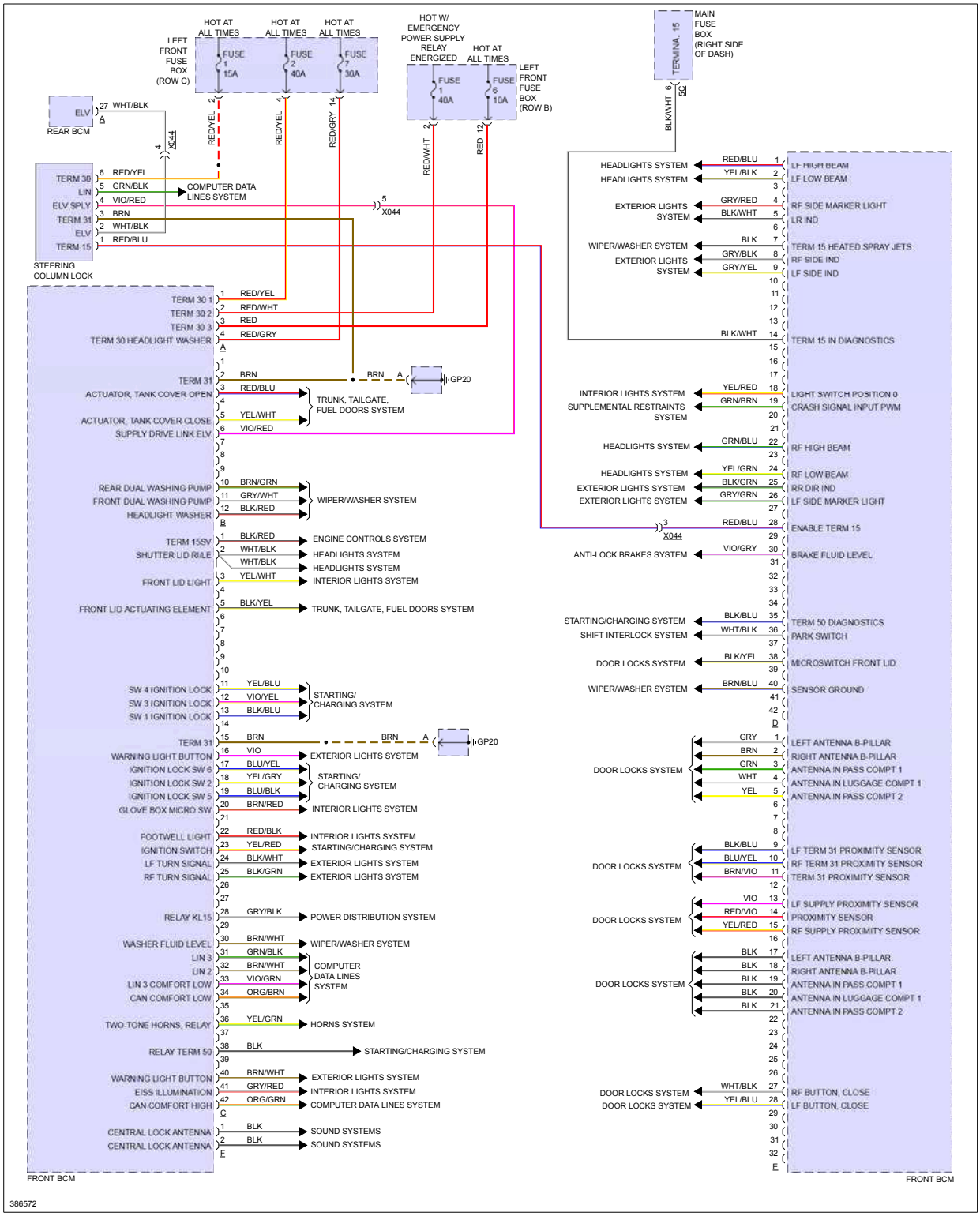

Fig 3: Rear Control Unit Circuit, W/ Turbo

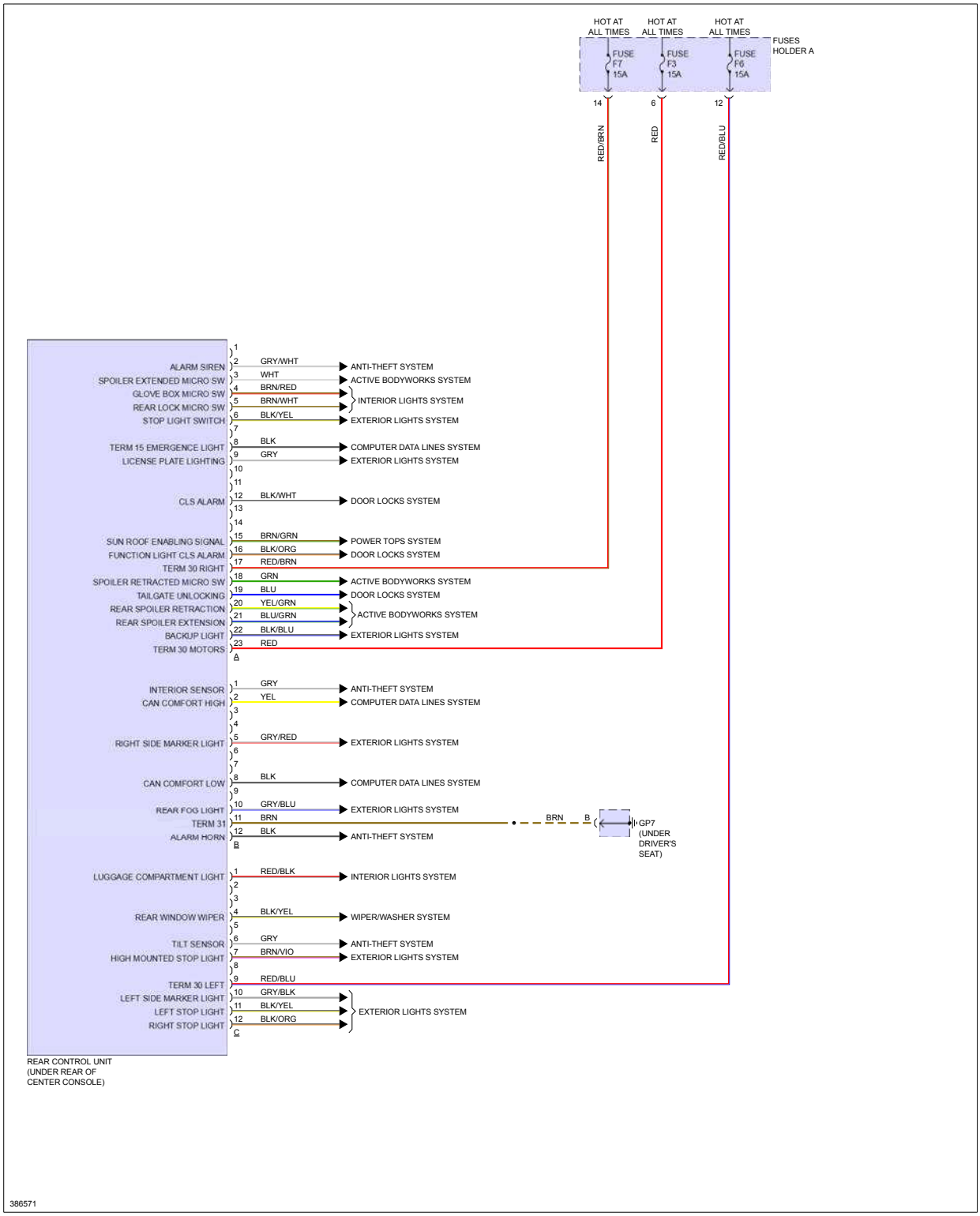

Fig 4: Rear Control Unit Circuit, W/O Turbo

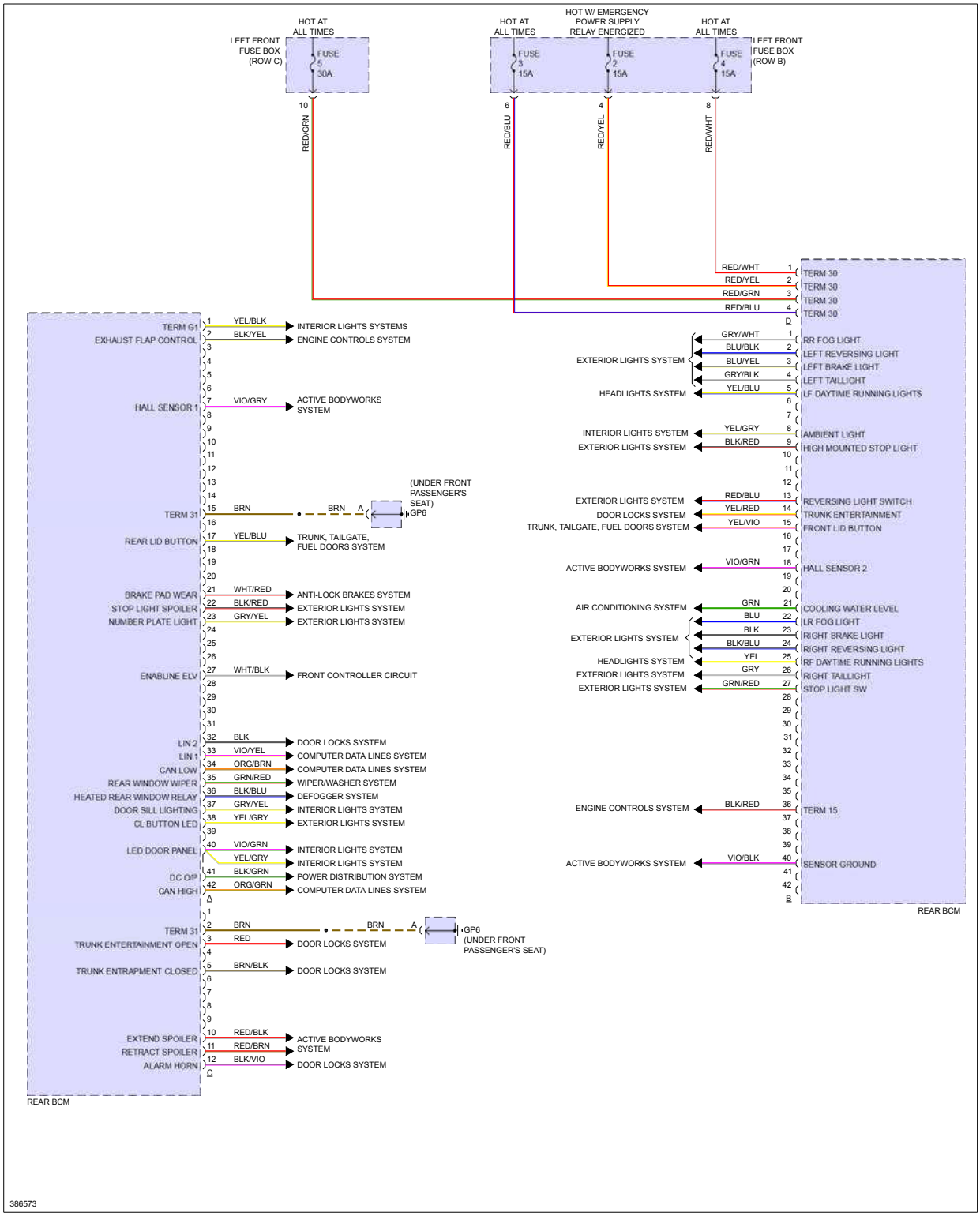

Fig 5: Vehicle Electrical System Control Module Circuit

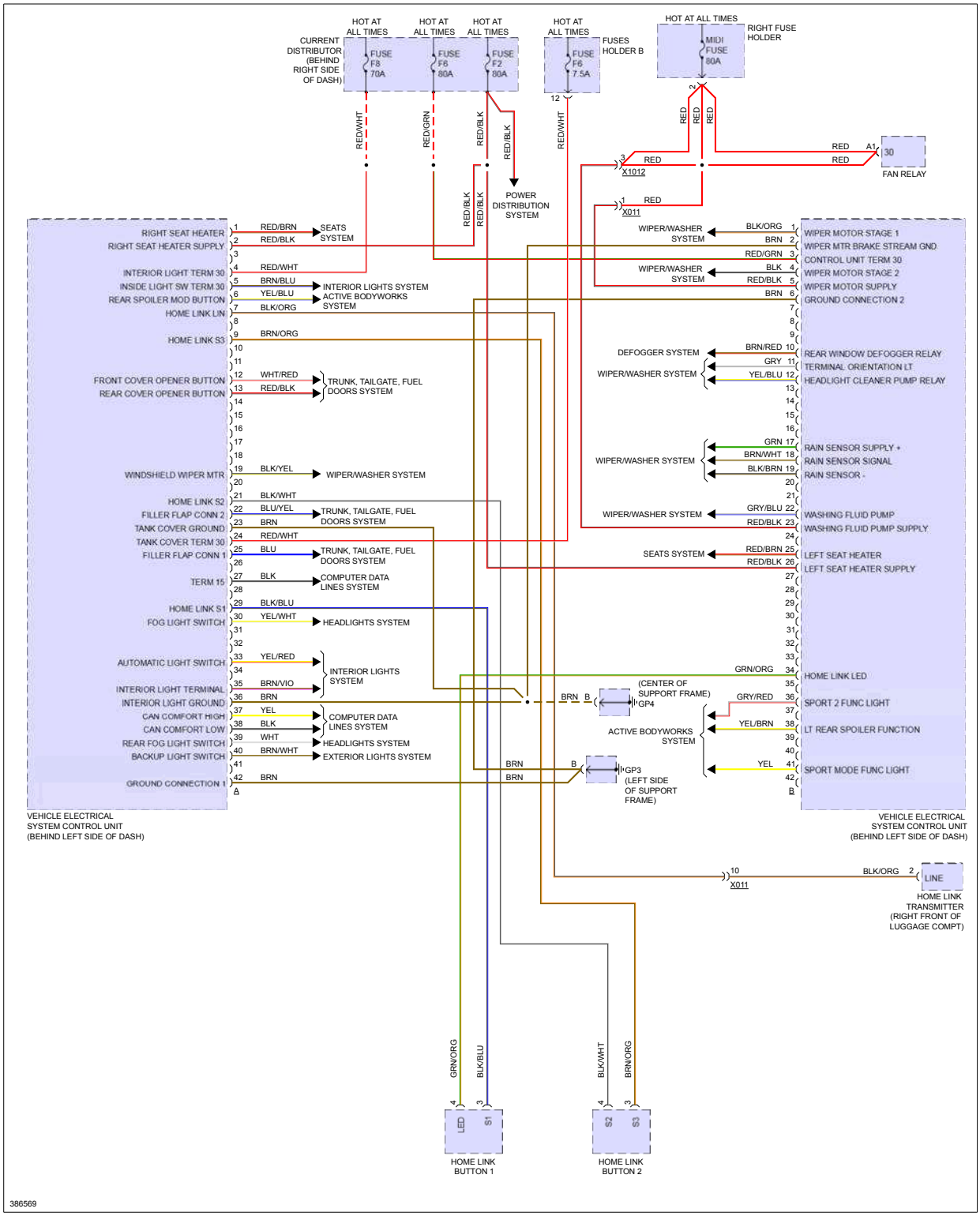

COMPUTER DATA LINES

Fig 1: Computer Data Lines Circuit, W/ Turbo

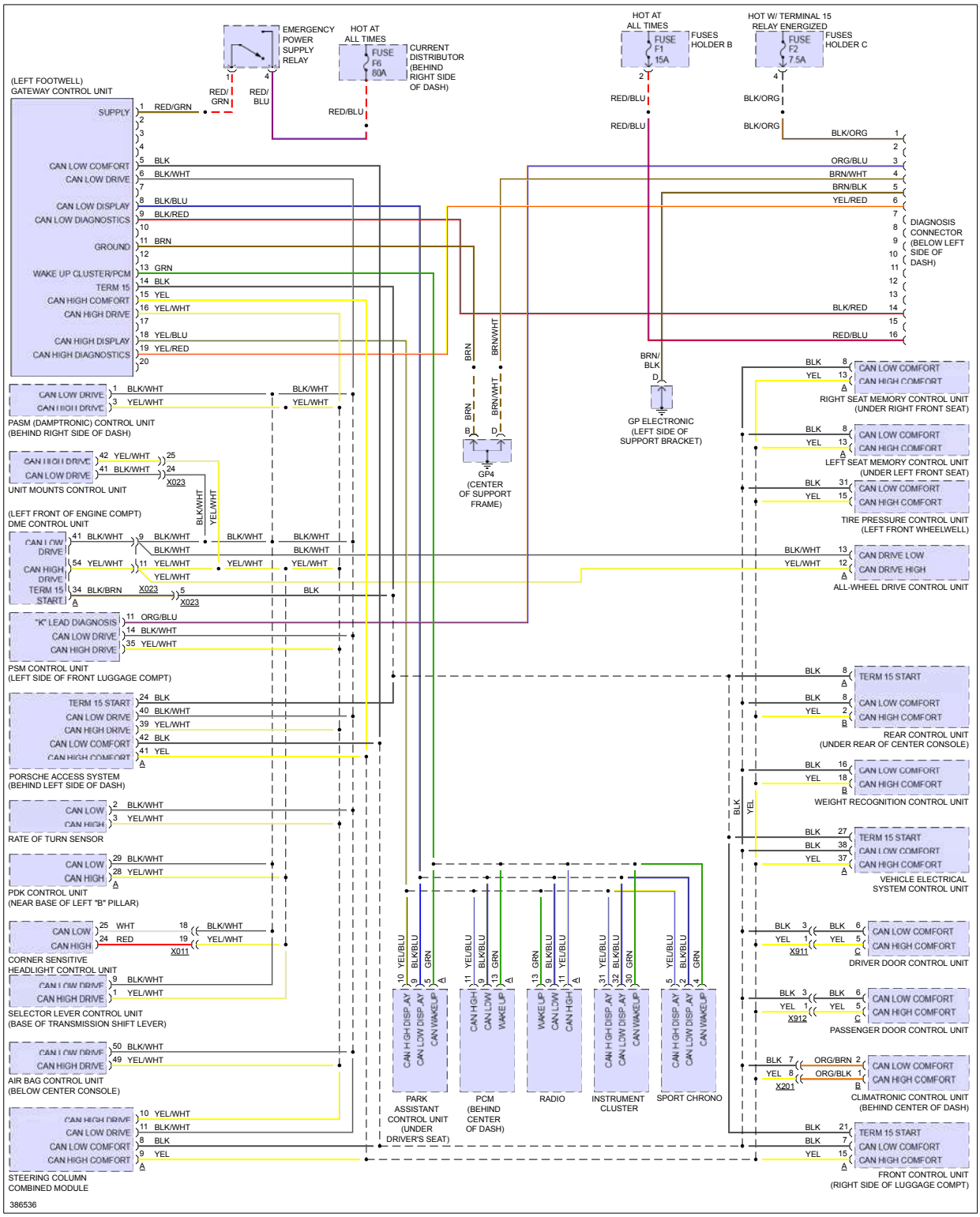

Fig 2: Computer Data Lines Circuit, W/O Turbo (1 of 2)

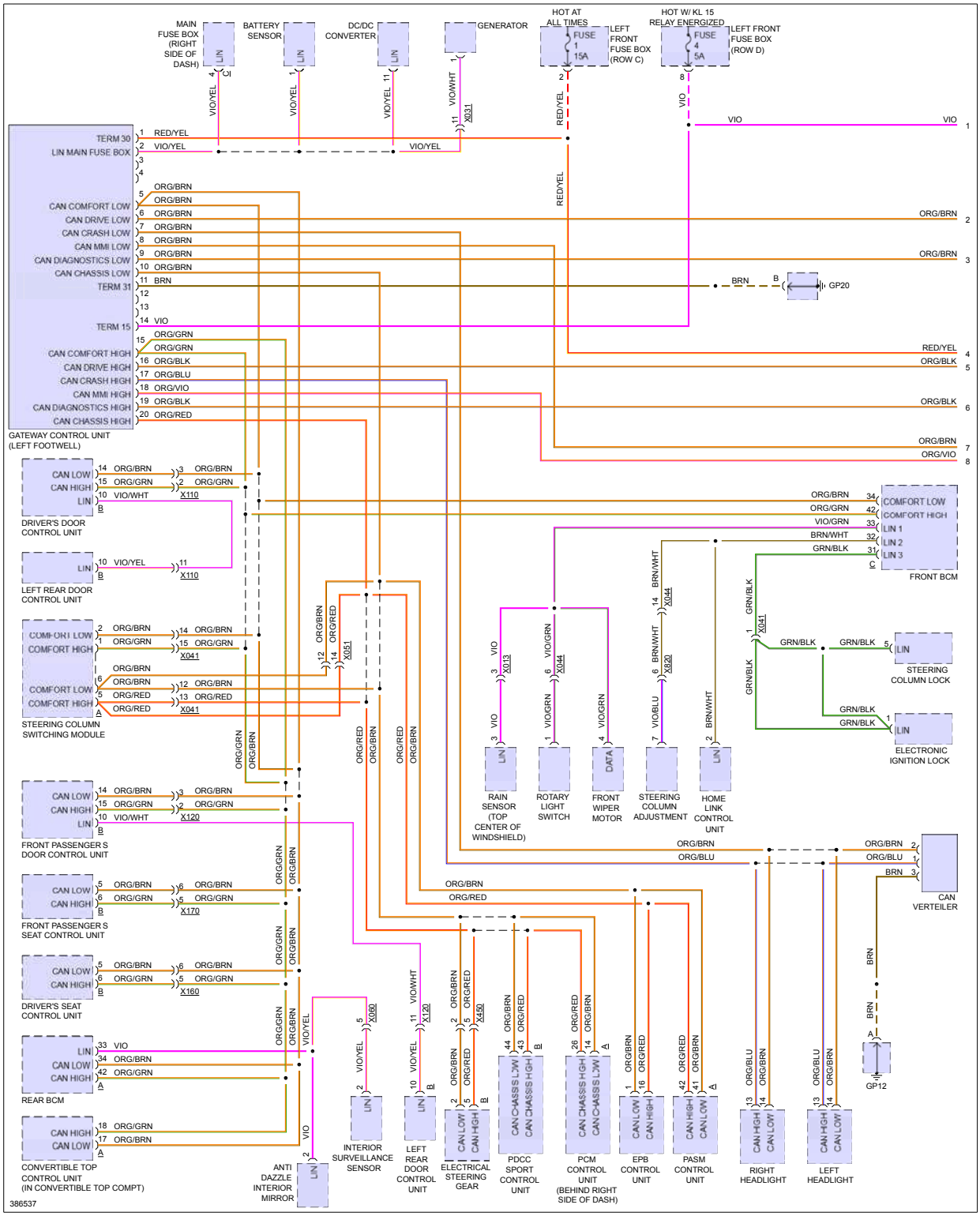

Fig 3: Computer Data Lines Circuit, W/O Turbo (2 of 2)

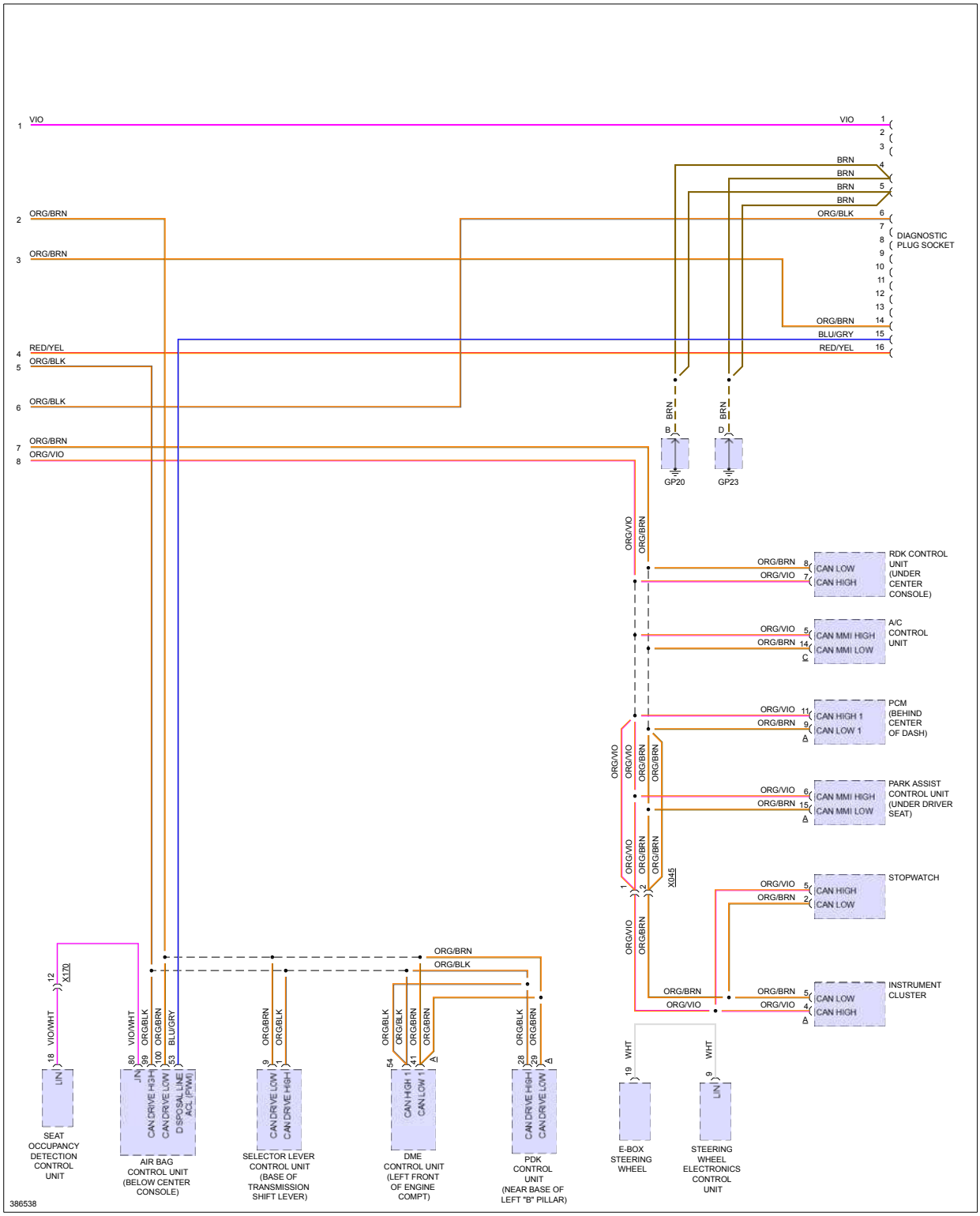

COOLING FAN

Fig 1: Cooling Fan Circuit, W/ Turbo

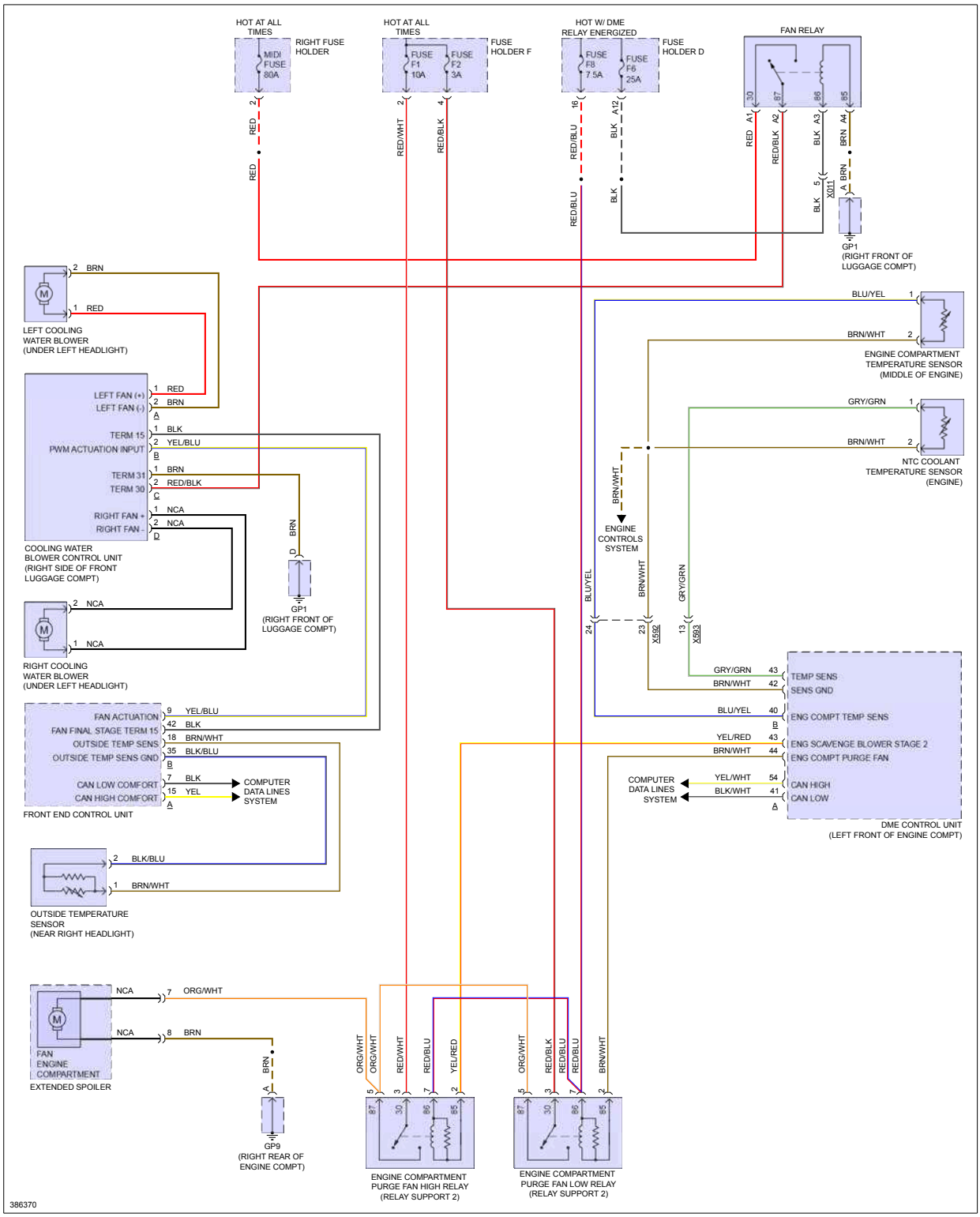

Fig 2: Cooling Fan Circuit, W/O Turbo

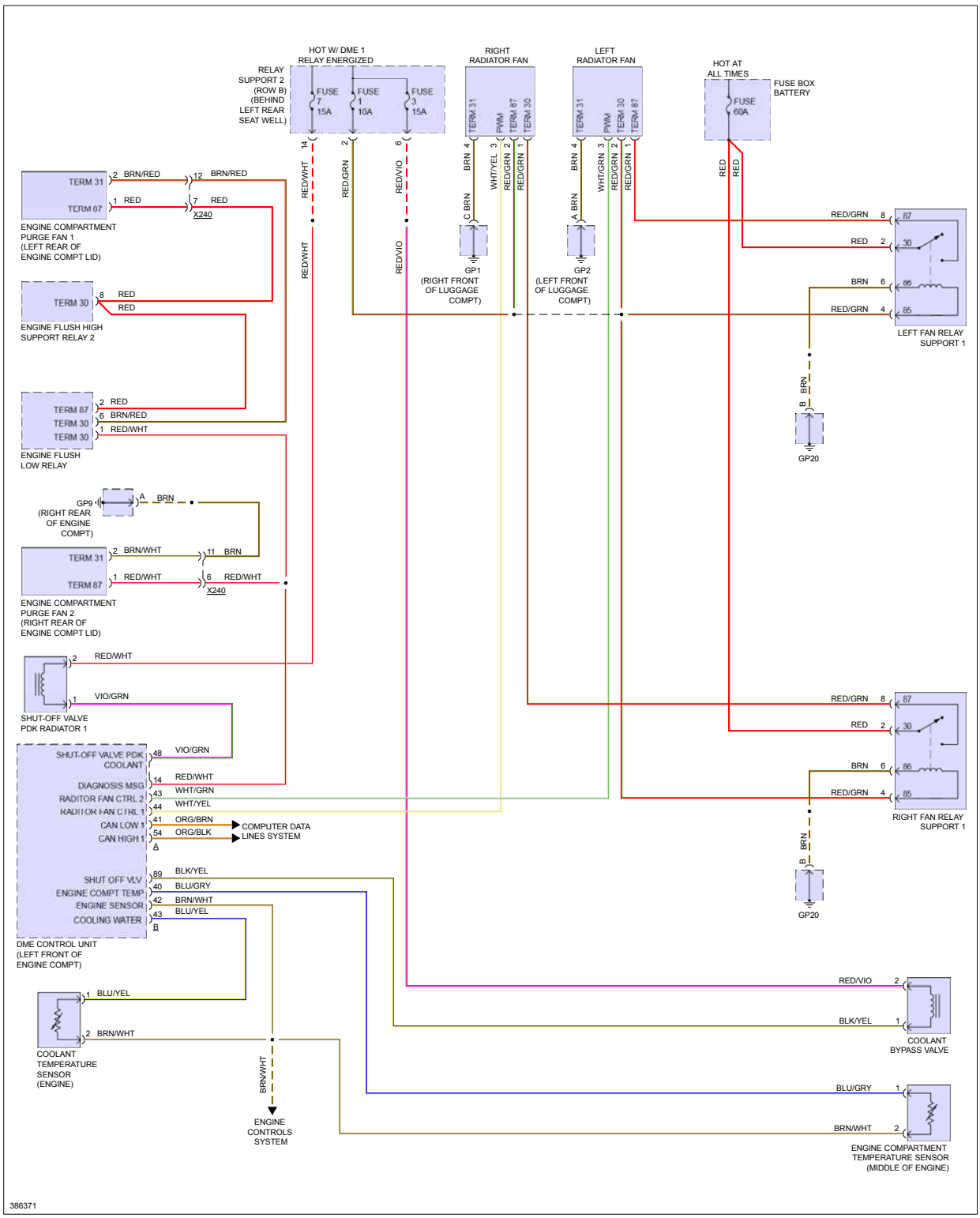

CRUISE CONTROL > 3.4L

Fig 1: 3.4L, Cruise Control Circuit

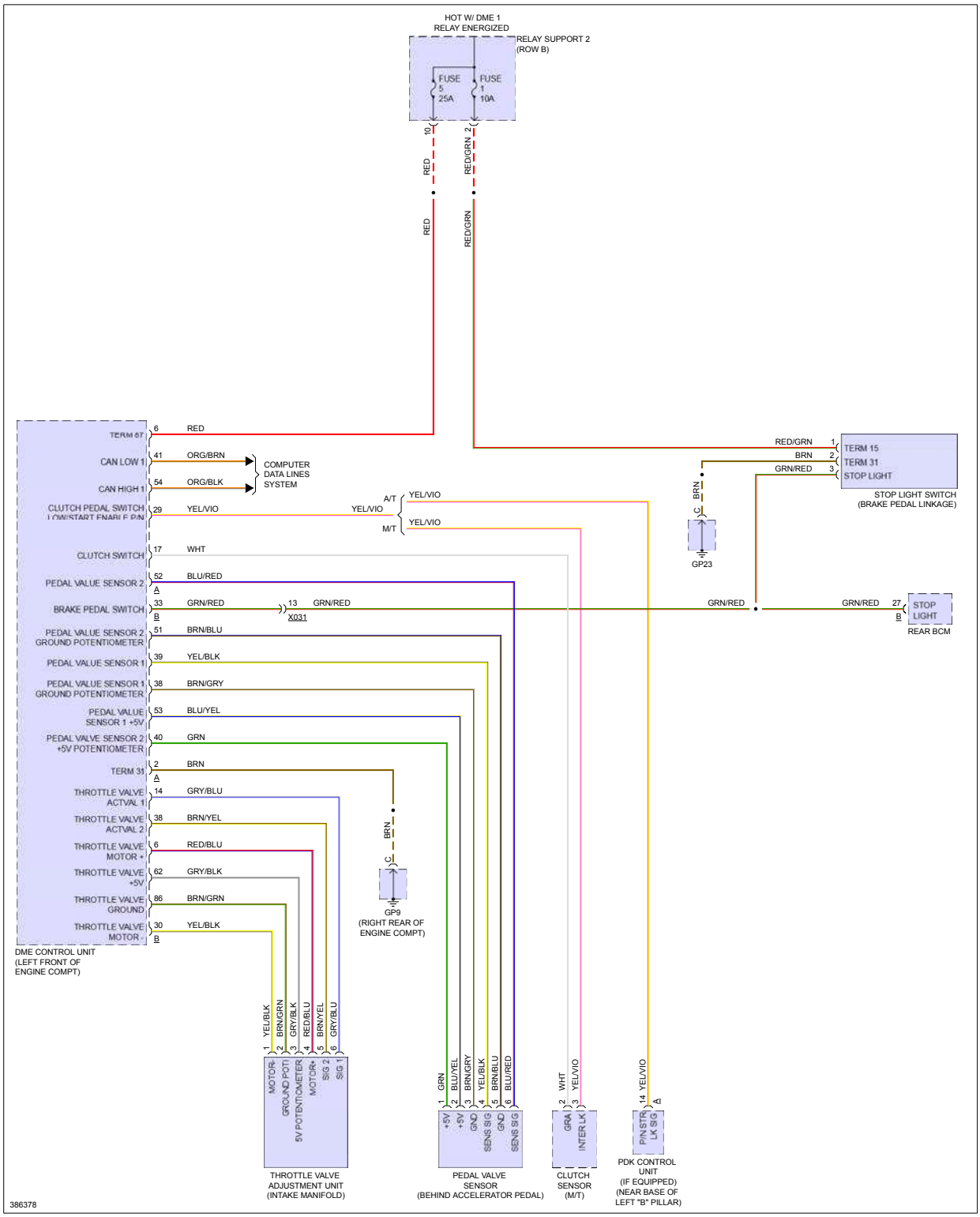

CRUISE CONTROL > 3.8L

Fig 1: 3.8L, Cruise Control Circuit

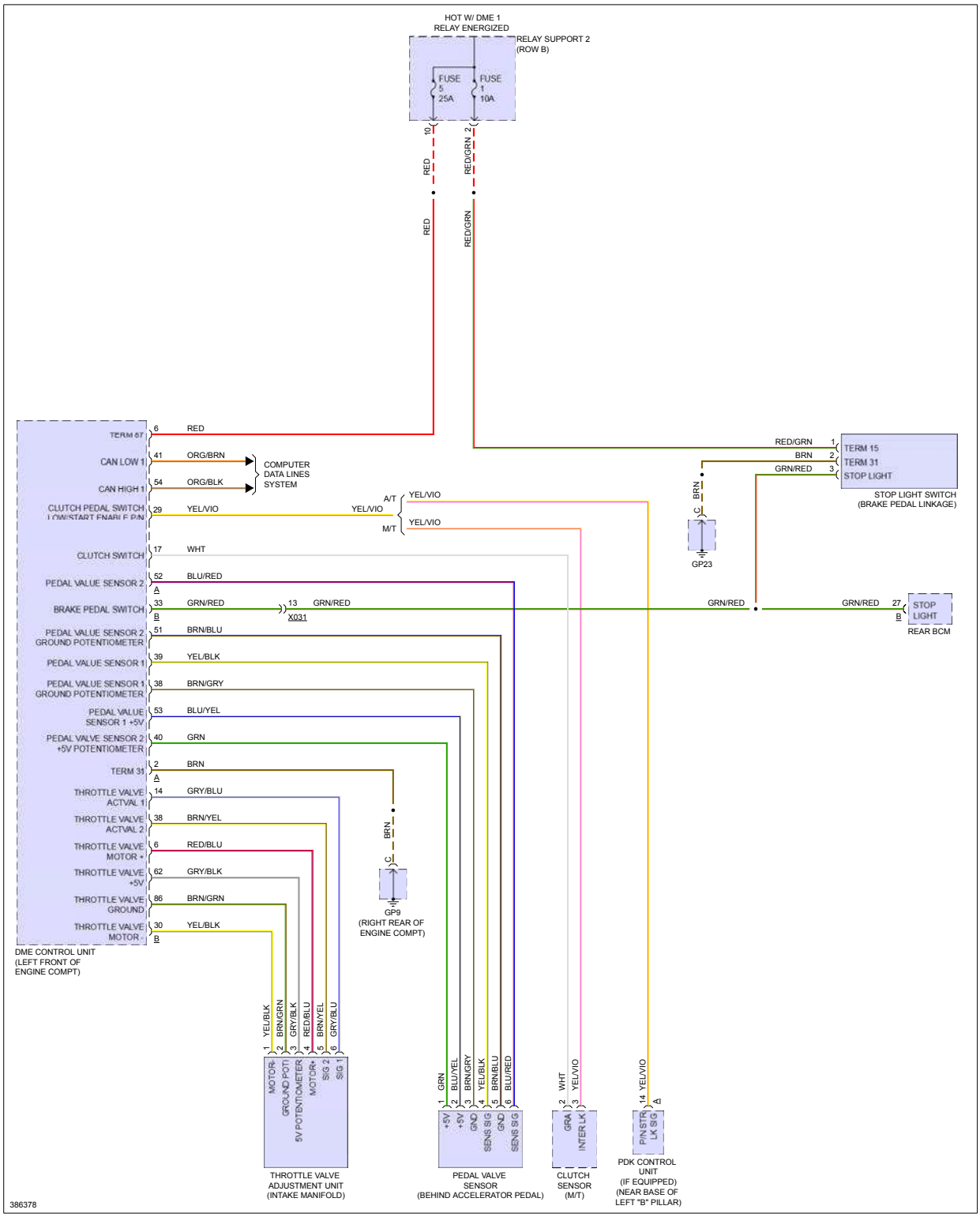

CRUISE CONTROL > 3.8L TWIN TURBO

Fig 1: 3.8L Twin Turbo, Cruise Control Circuit

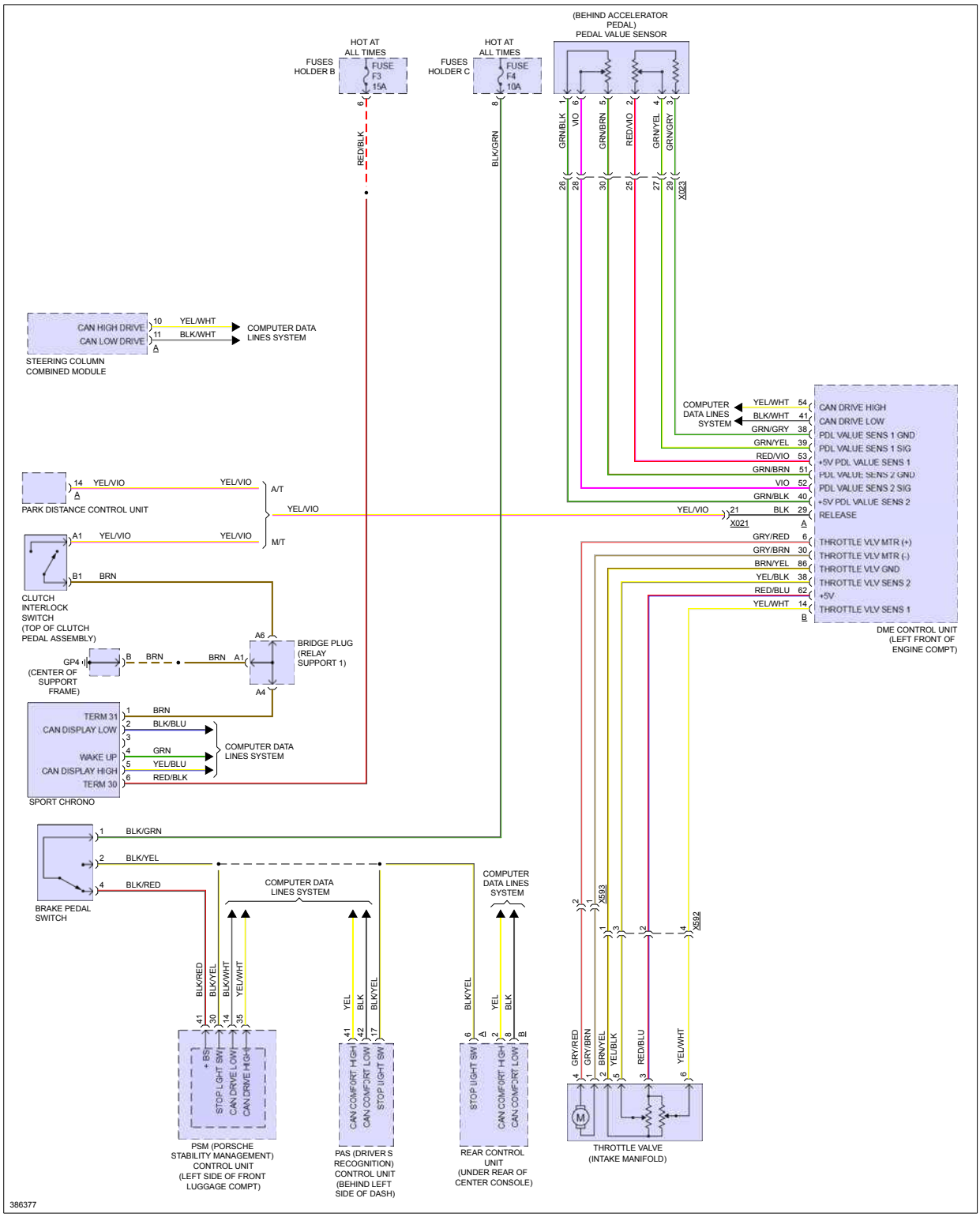

DEFOGGERS

Fig 1: Defogger Circuit, W/O Turbo

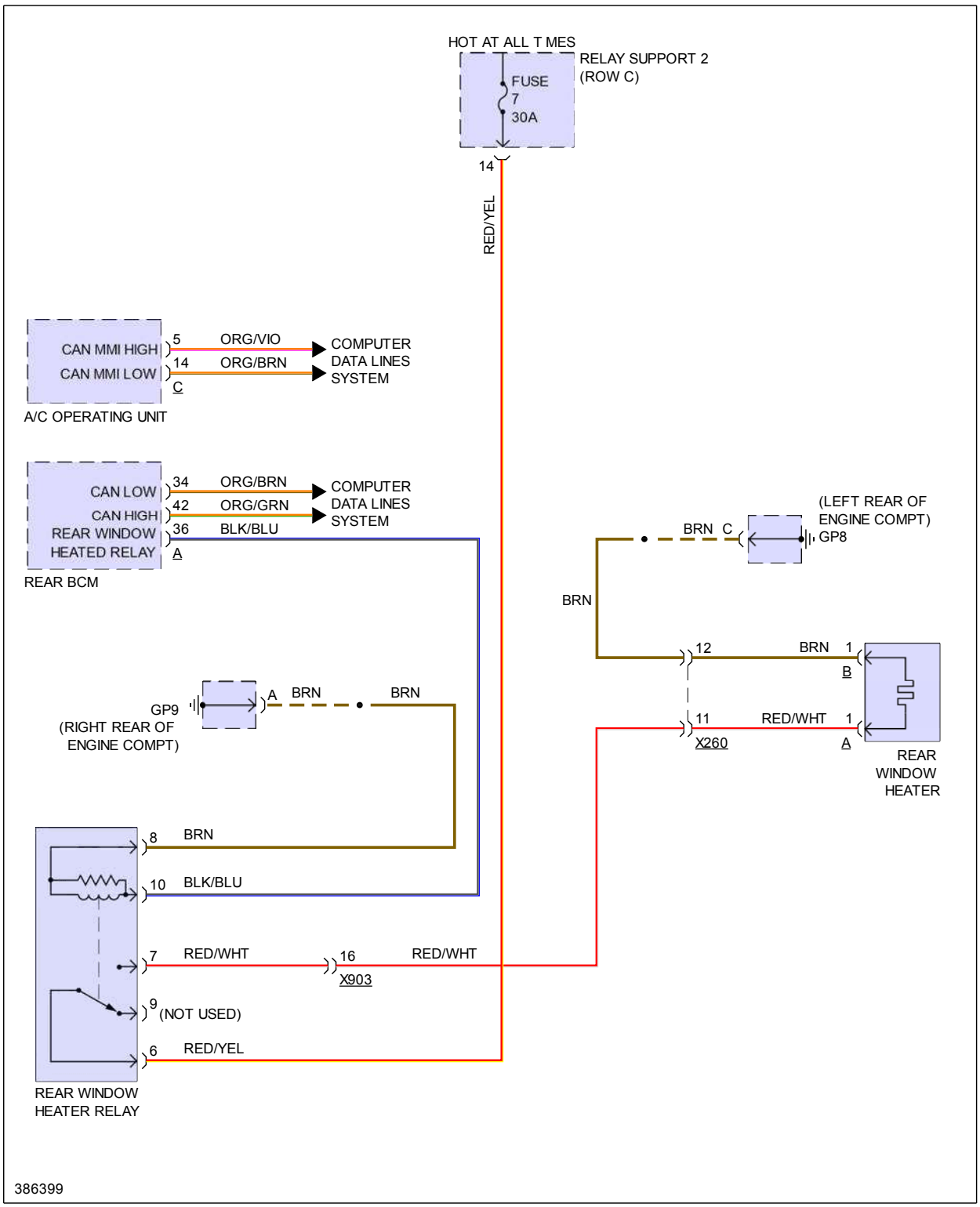

Fig 2: Heated Mirrors Circuit, W/O Turbo

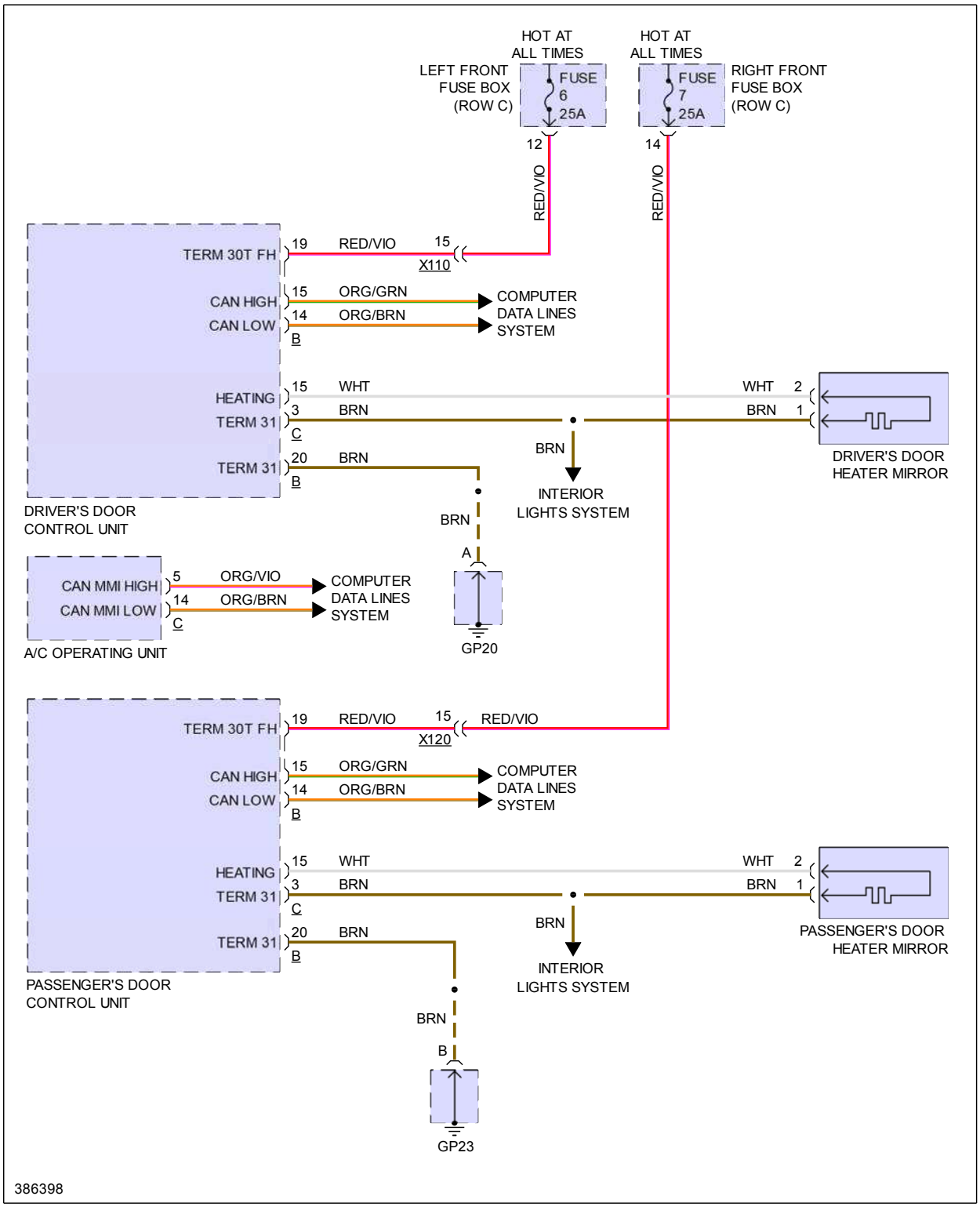

Fig 3: Rear Defogger & Heated Mirrors Circuit, W/ Turbo

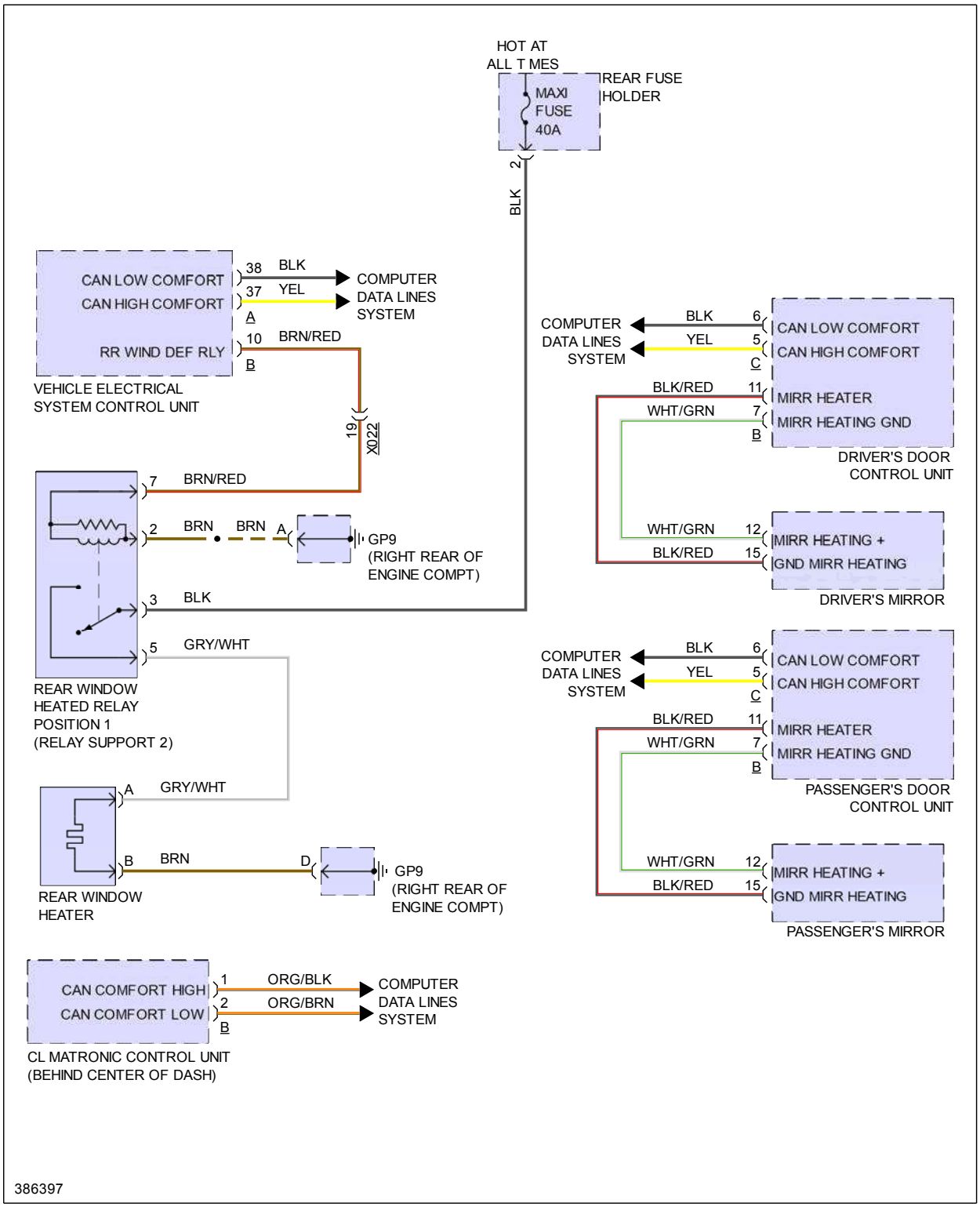

ELECTRONIC POWER STEERING

Fig 1: Electronic Power Steering Circuit

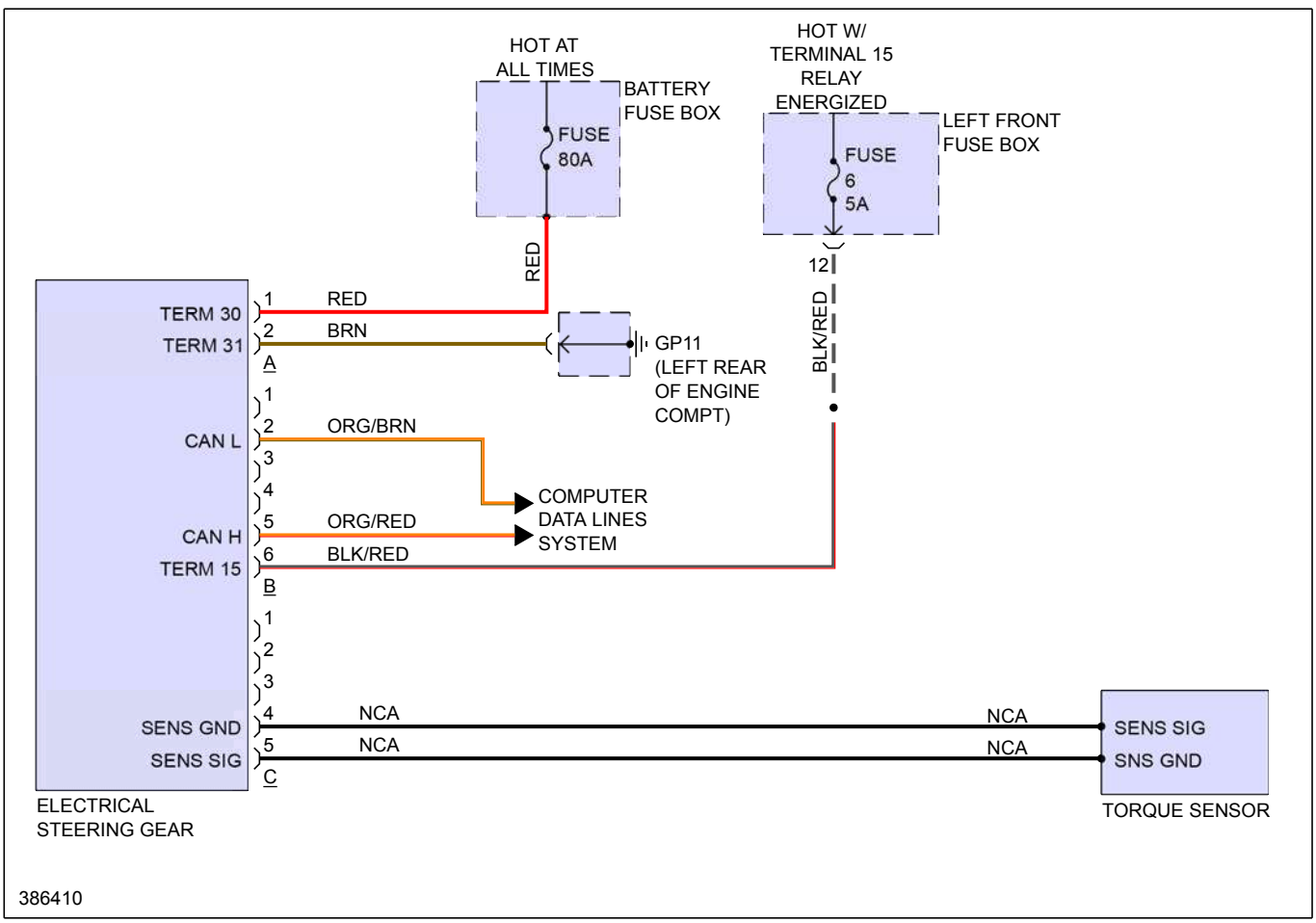

Fig 2: Power Tilt Steering Column Circuit

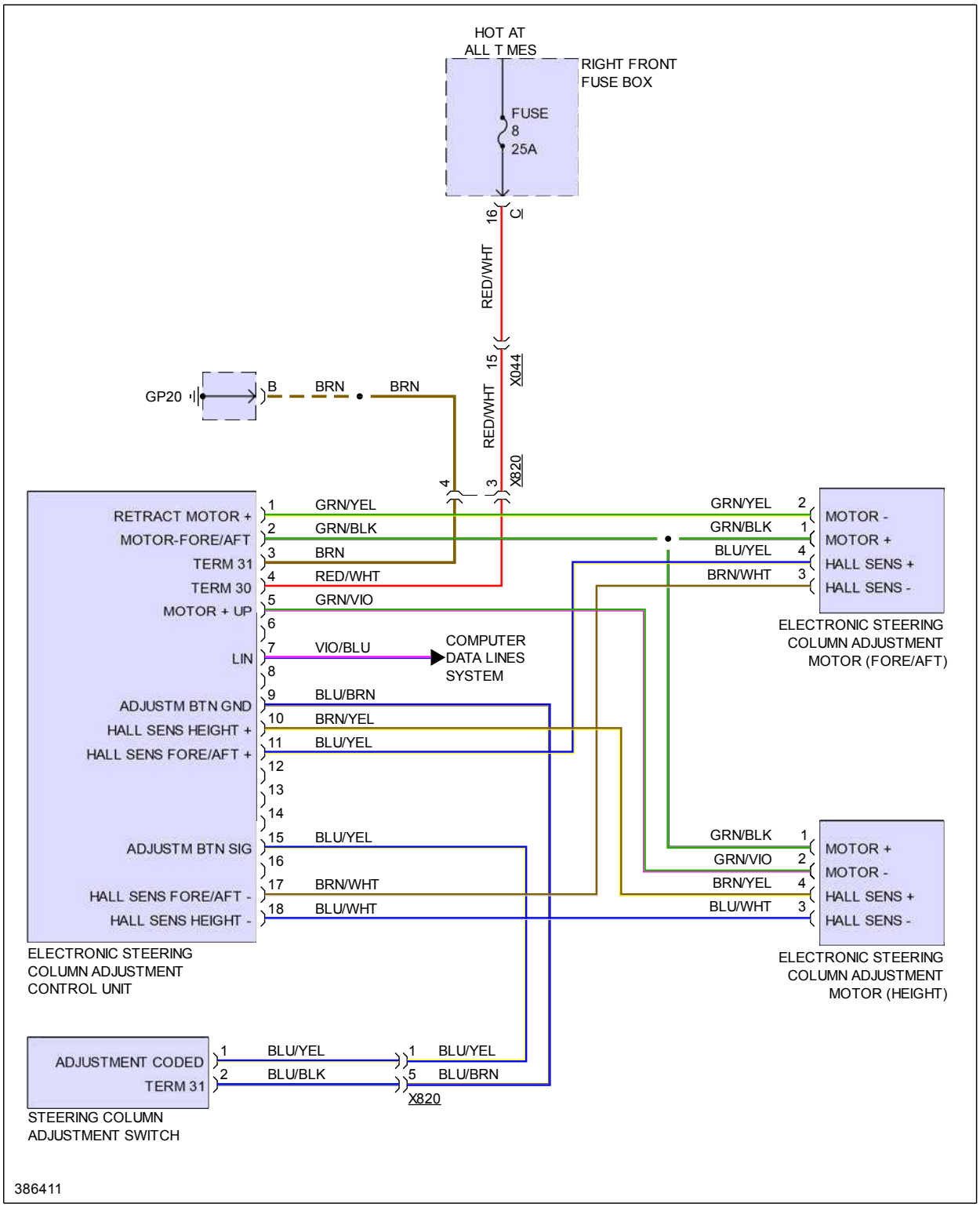

ELECTRONIC SUSPENSION

Fig 1: Dynamic Chassis Control Circuit

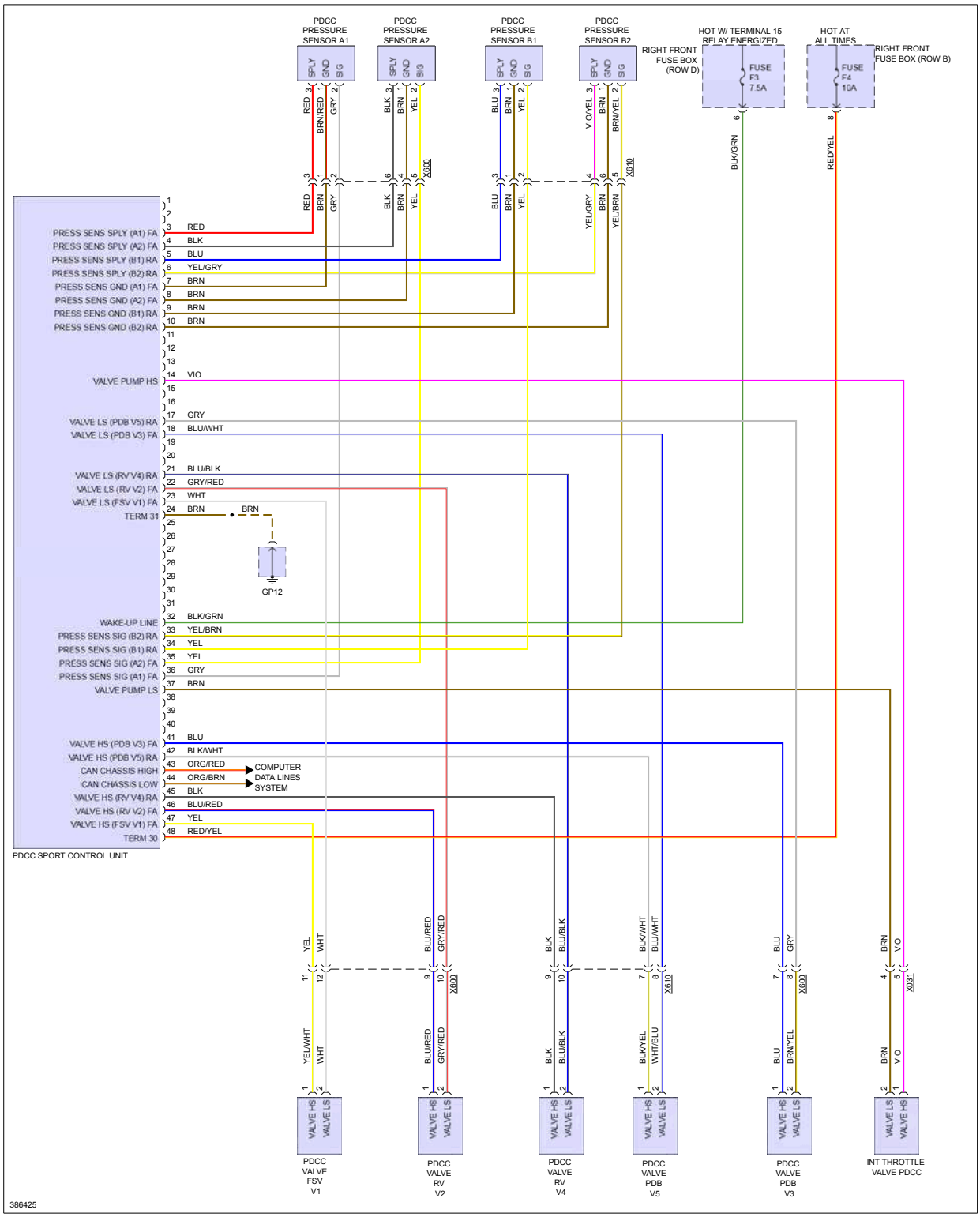

Fig 2: Electronic Level Control Circuit, W/ Turbo

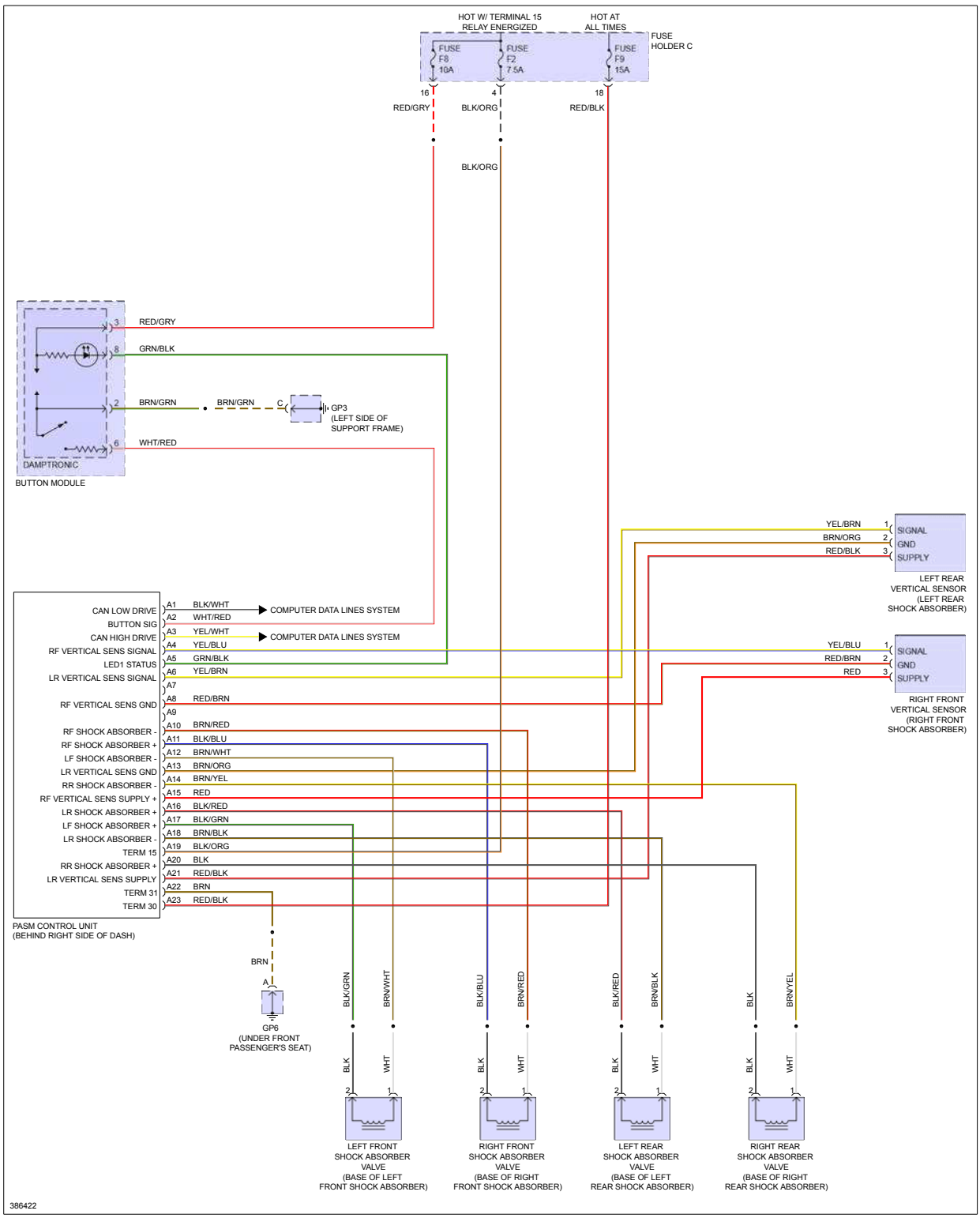

Fig 3: Electronic Level Control Circuit, W/O Turbo (1 of 2)

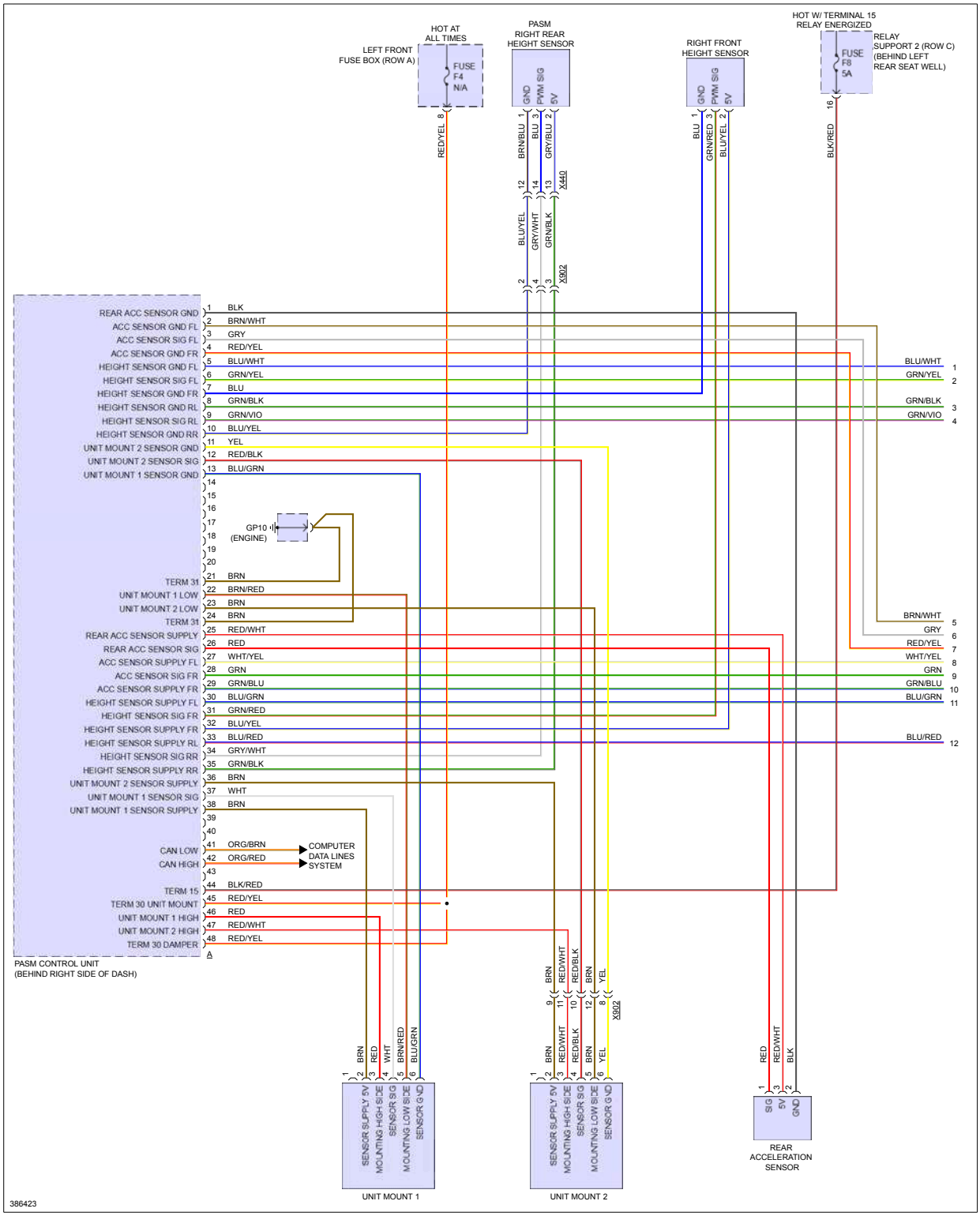

Fig 4: Electronic Level Control Circuit, W/O Turbo (2 of 2)

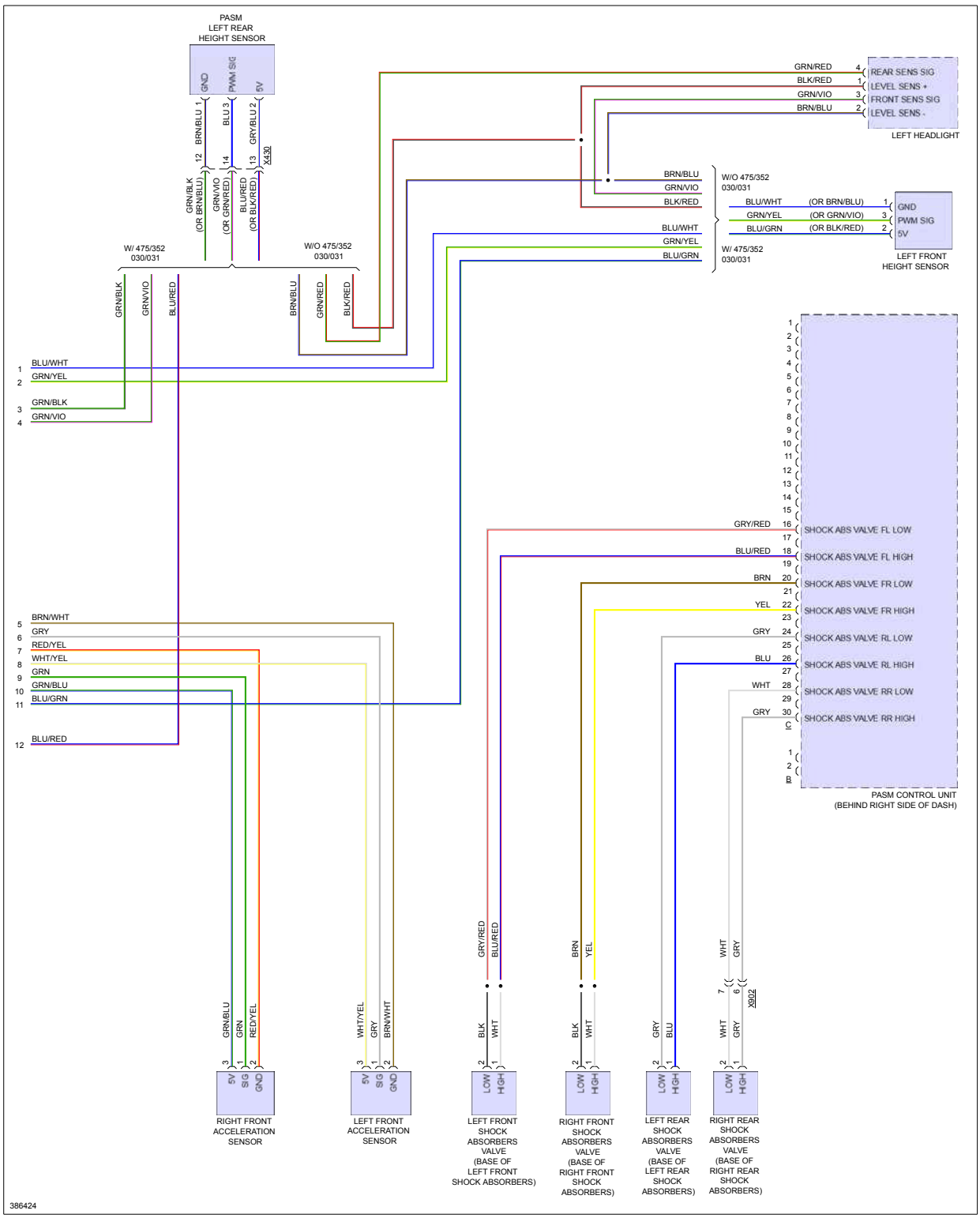

Fig 1: 3.4L, Engine Performance Circuit (1 of 6)

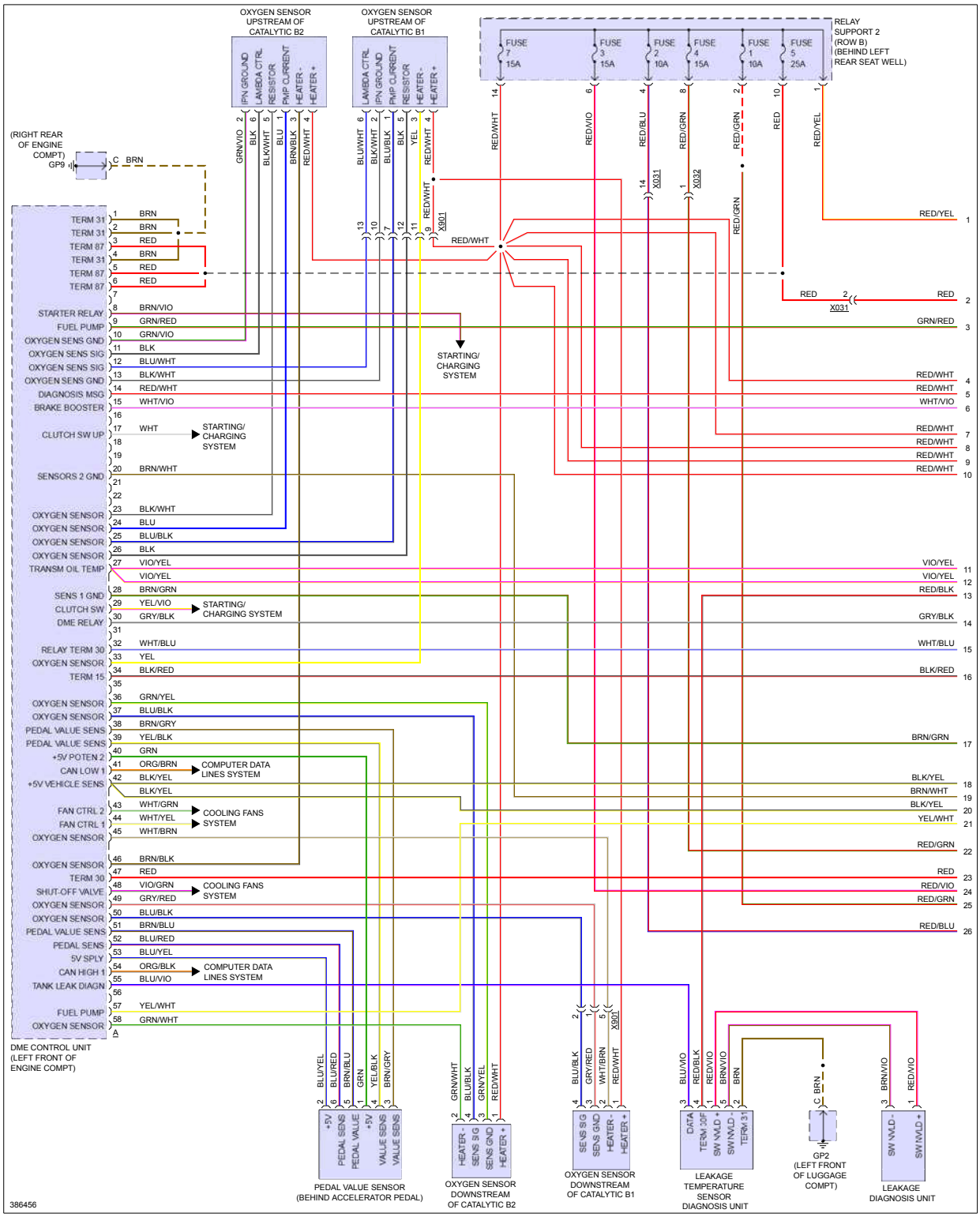

Fig 2: 3.4L, Engine Performance Circuit (2 of 6)

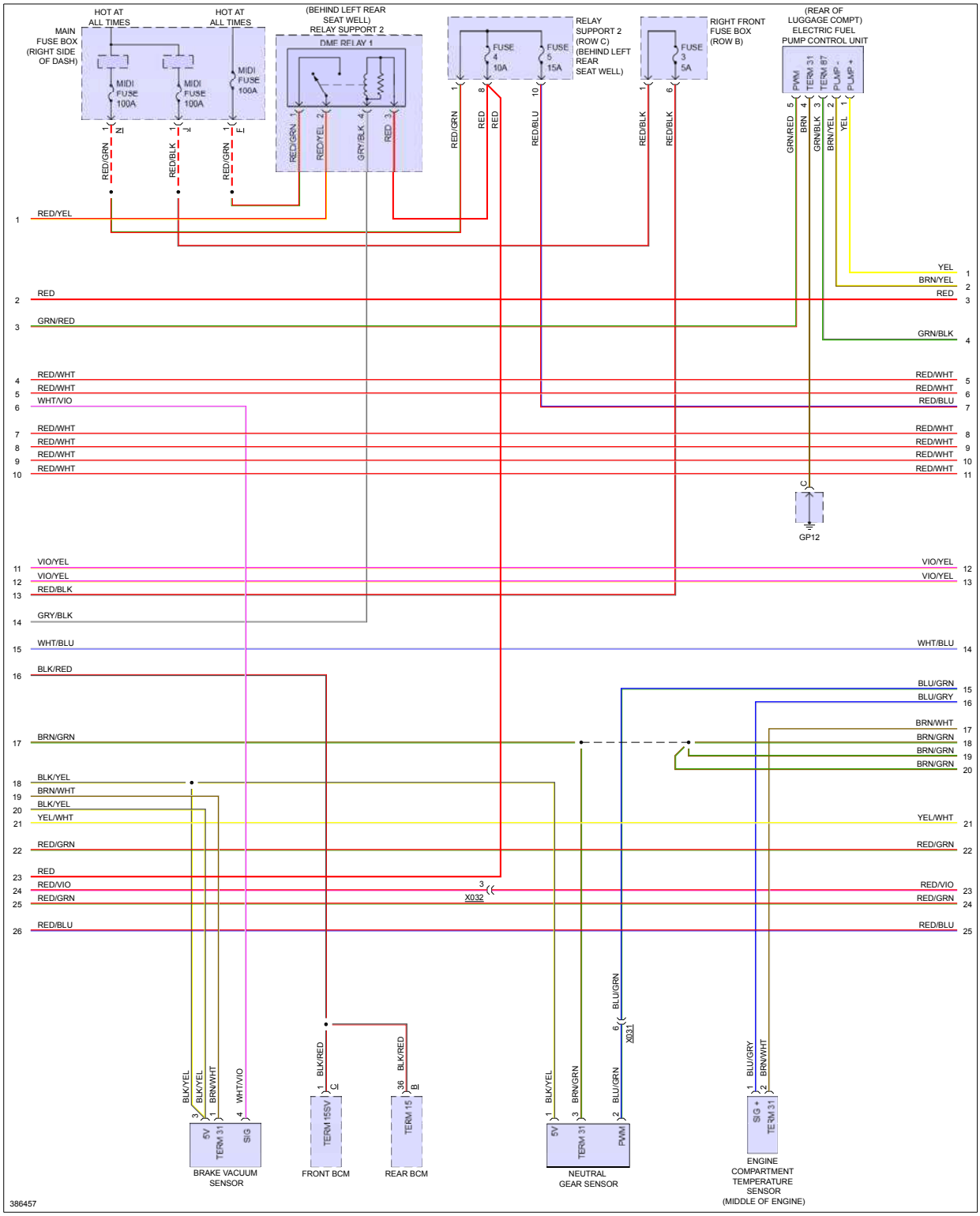

Fig 3: 3.4L, Engine Performance Circuit (3 of 6)

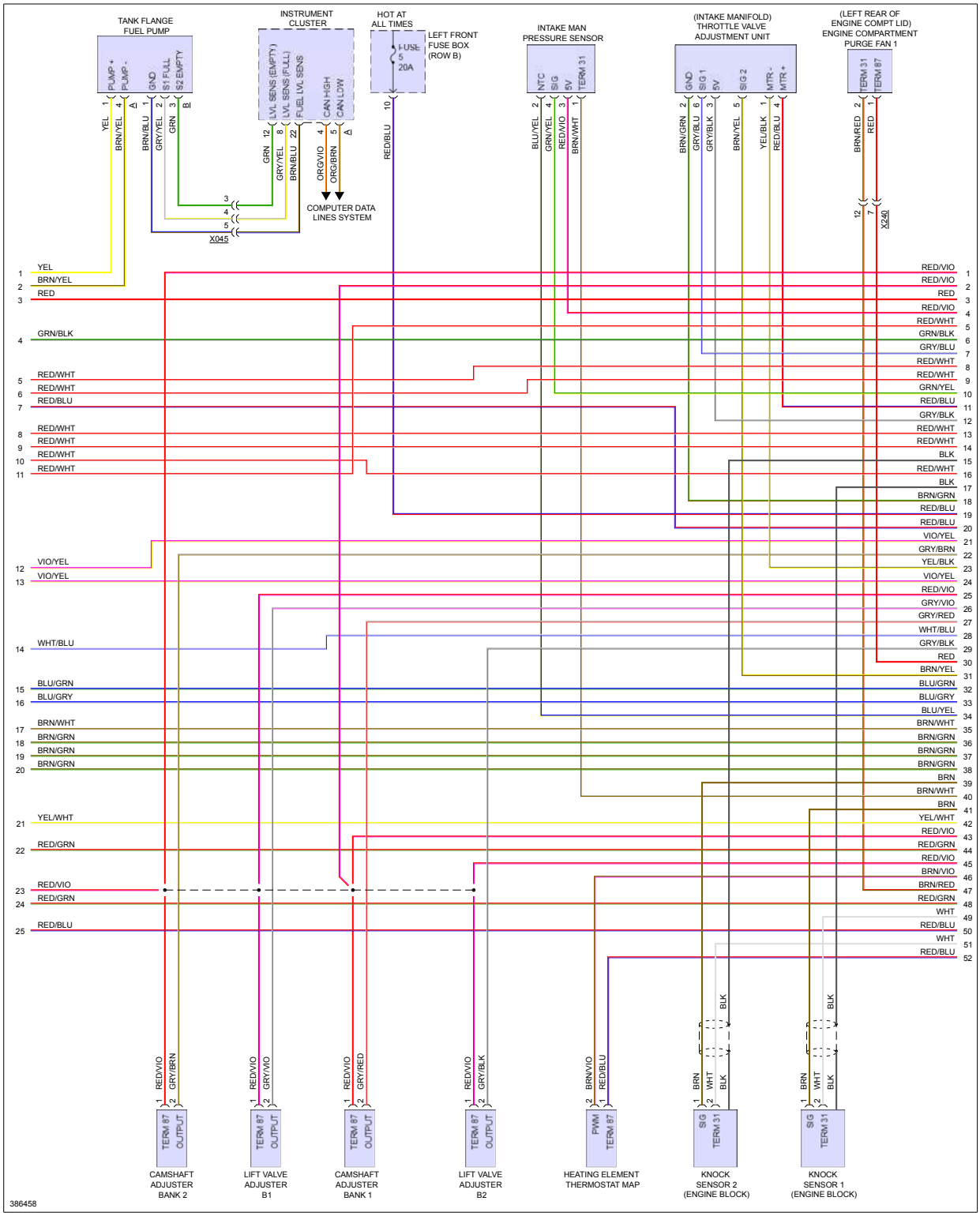

Fig 4: 3.4L, Engine Performance Circuit (4 of 6)

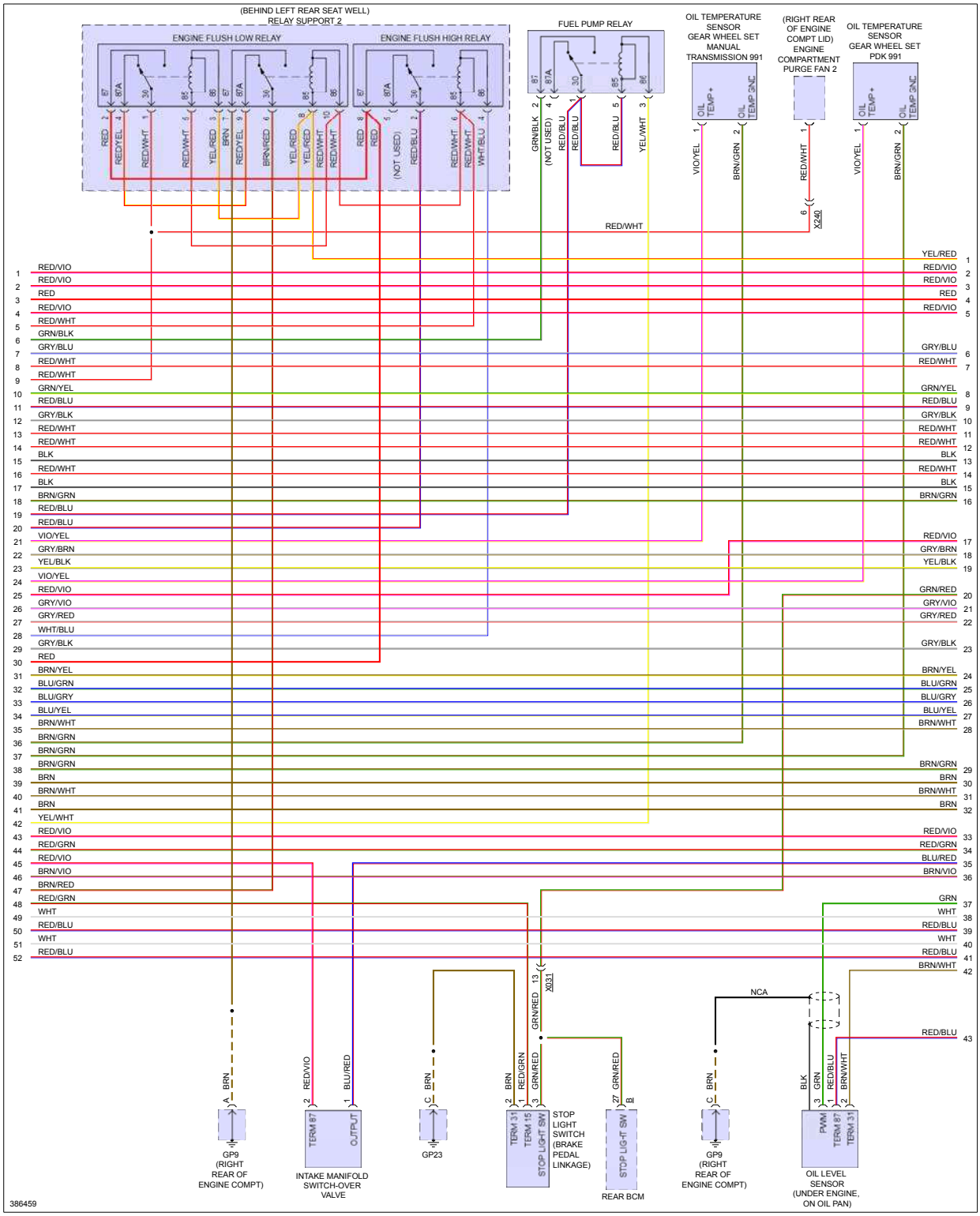

Fig 5: 3.4L, Engine Performance Circuit (5 of 6)

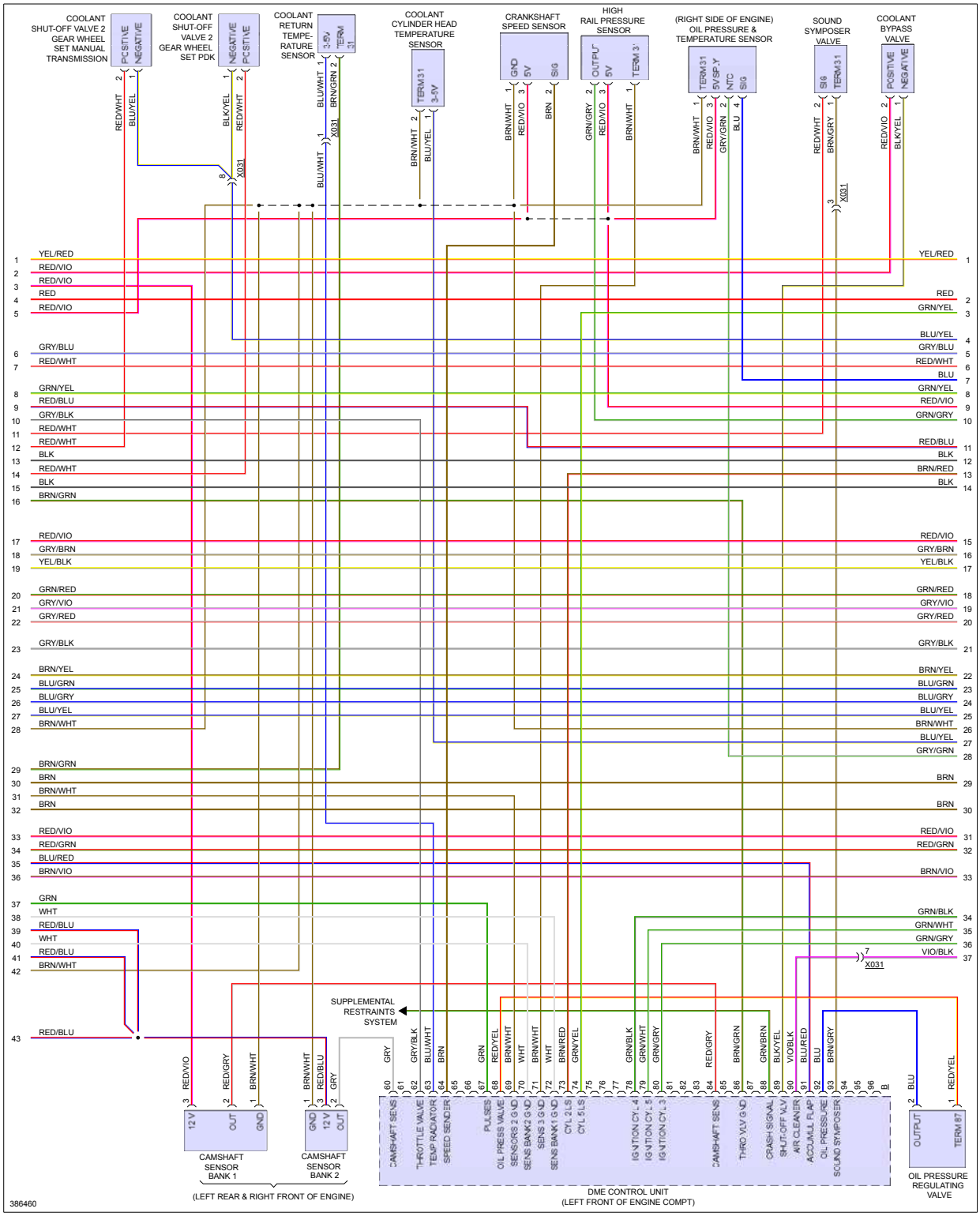

Fig 6: 3.4L, Engine Performance Circuit (6 of 6)

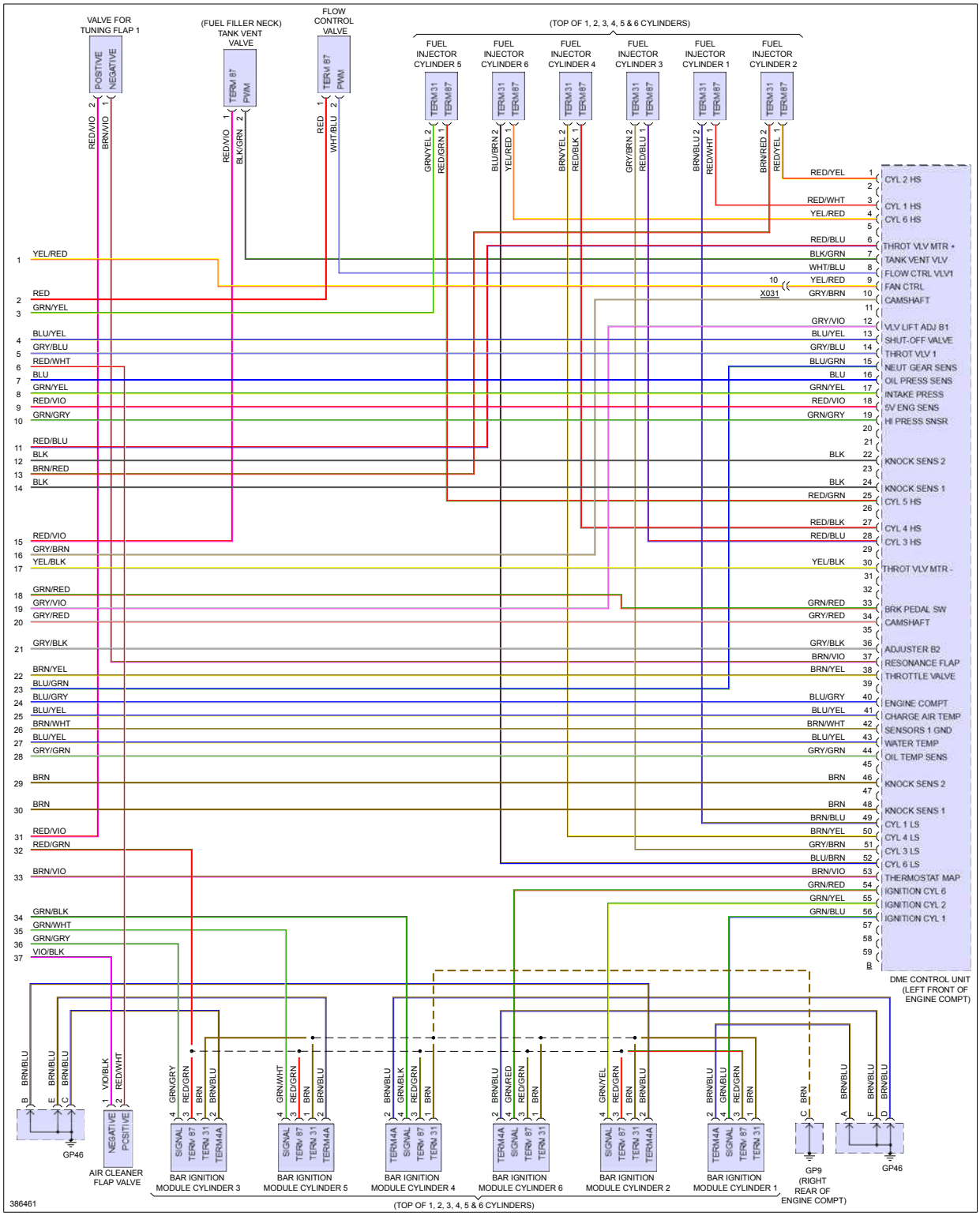

Fig 1: 3.8L, Engine Performance Circuit (1 of 6)

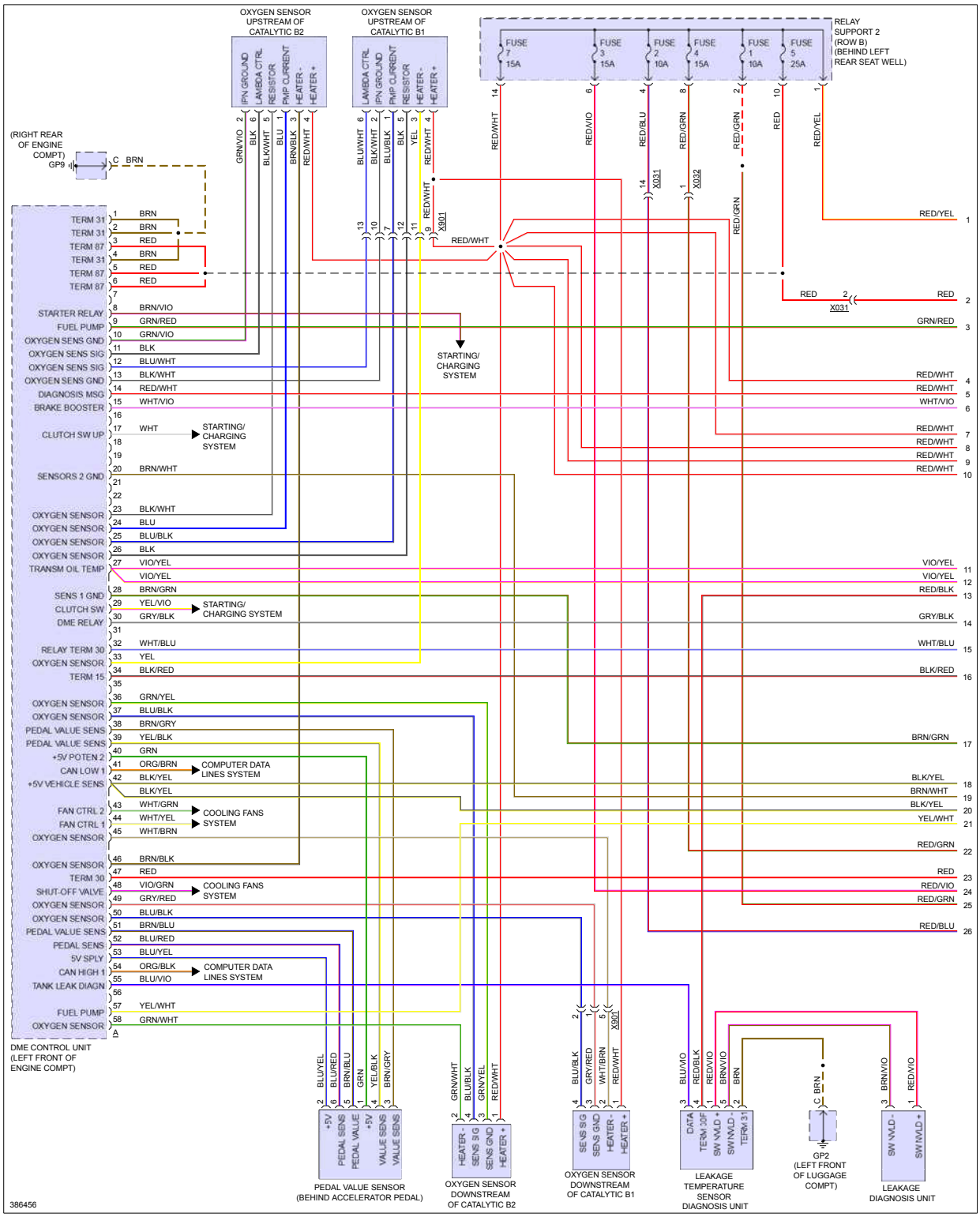

Fig 2: 3.8L, Engine Performance Circuit (2 of 6)

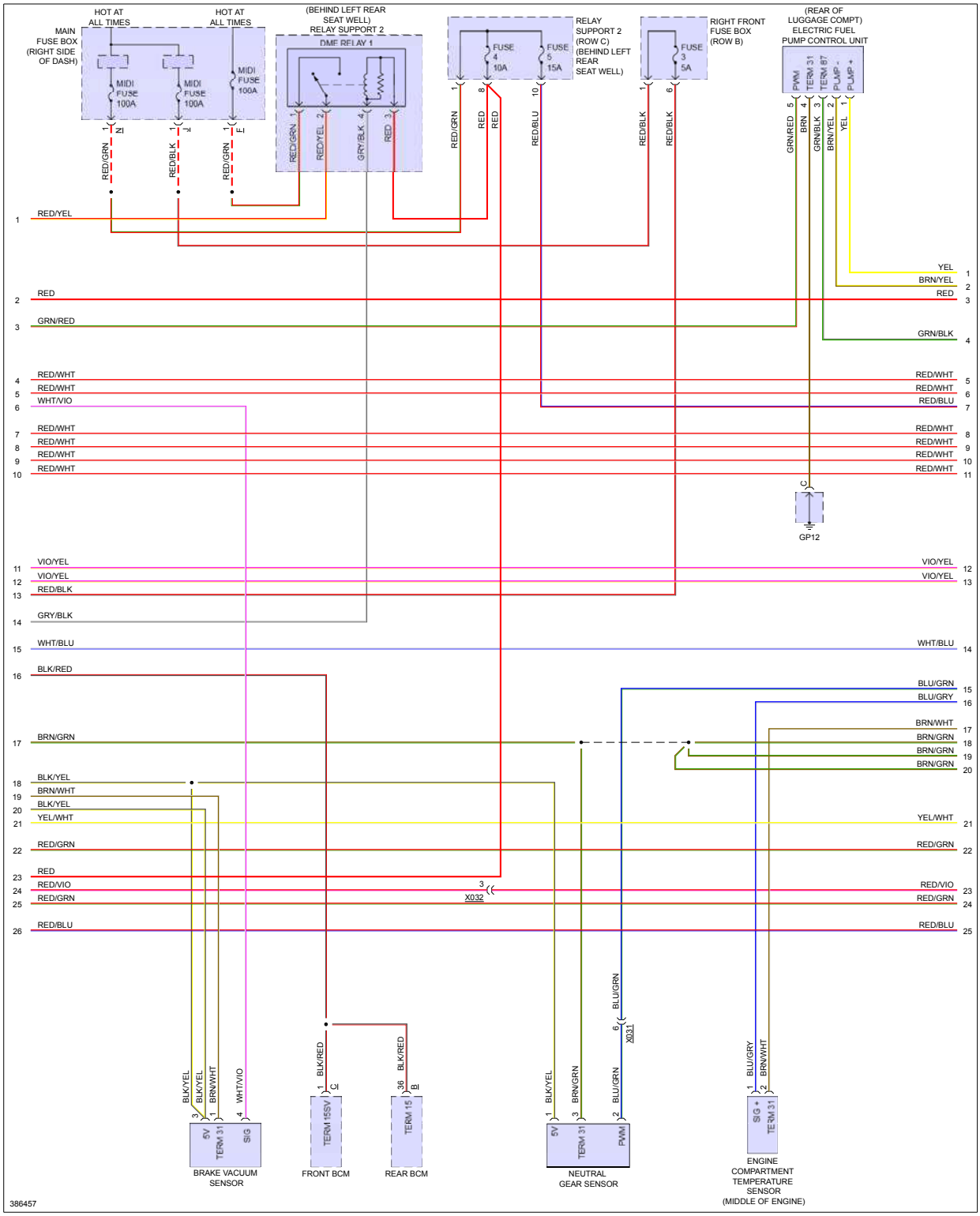

Fig 3: 3.8L, Engine Performance Circuit (3 of 6)

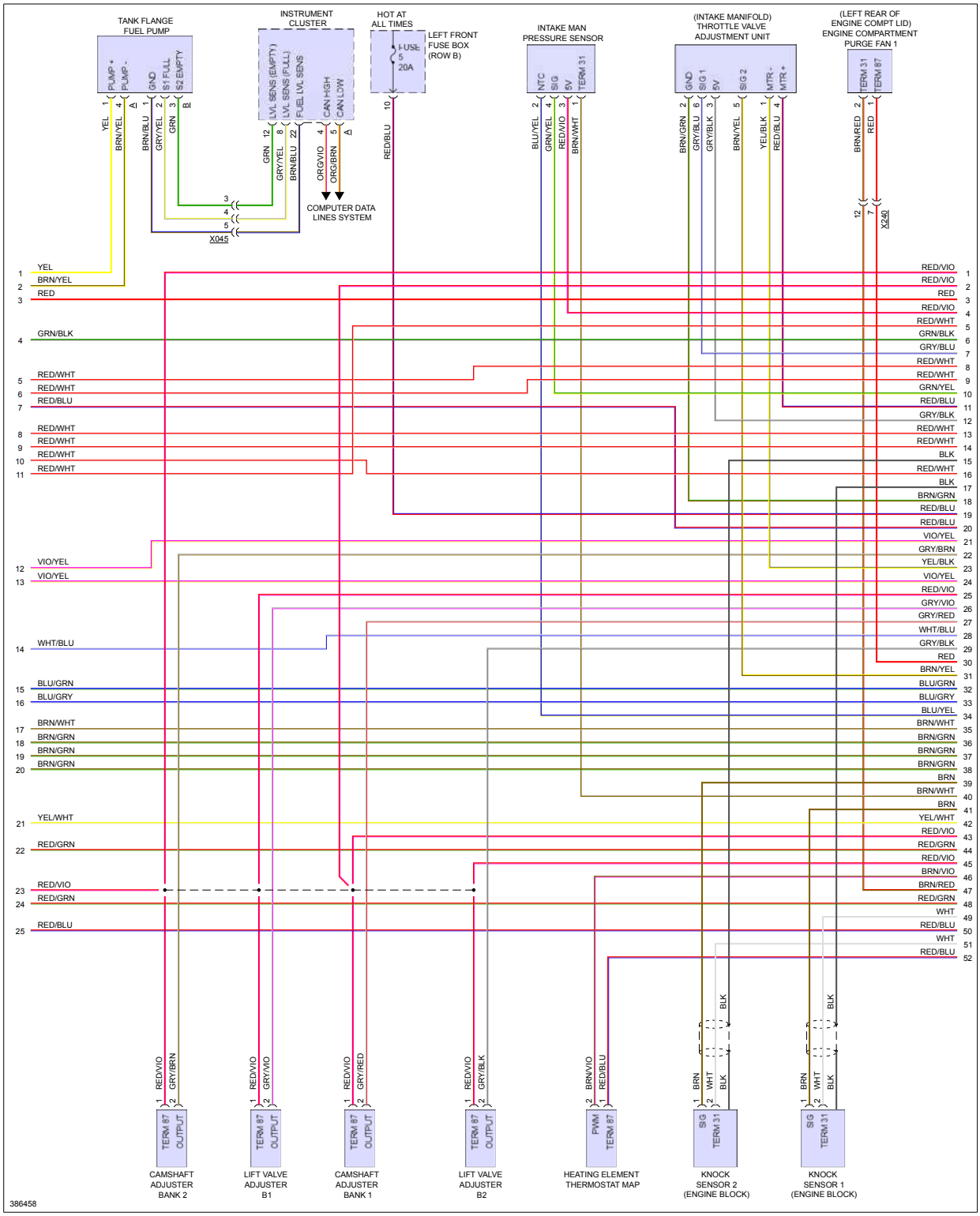

Fig 4: 3.8L, Engine Performance Circuit (4 of 6)

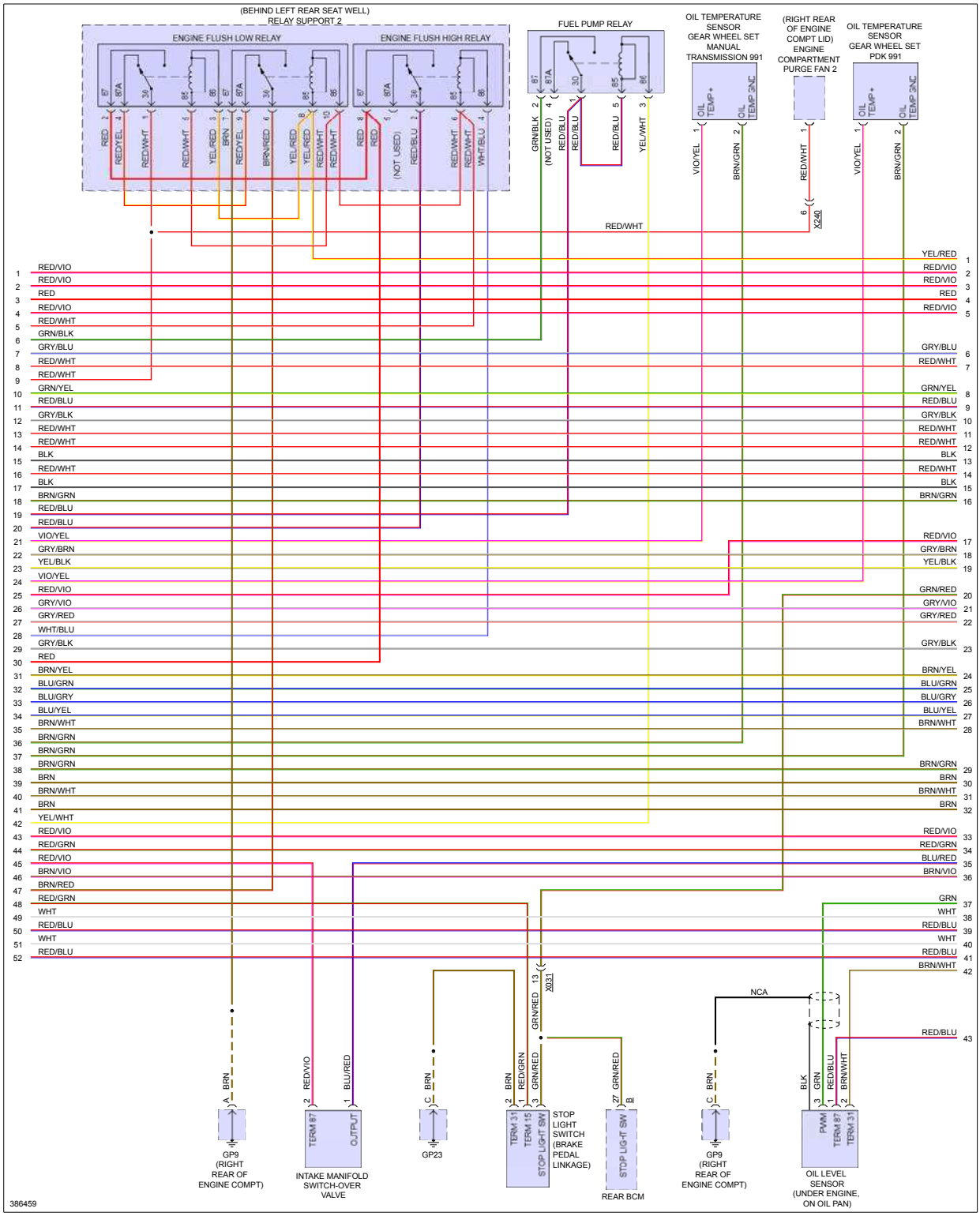

Fig 5: 3.8L, Engine Performance Circuit (5 of 6)

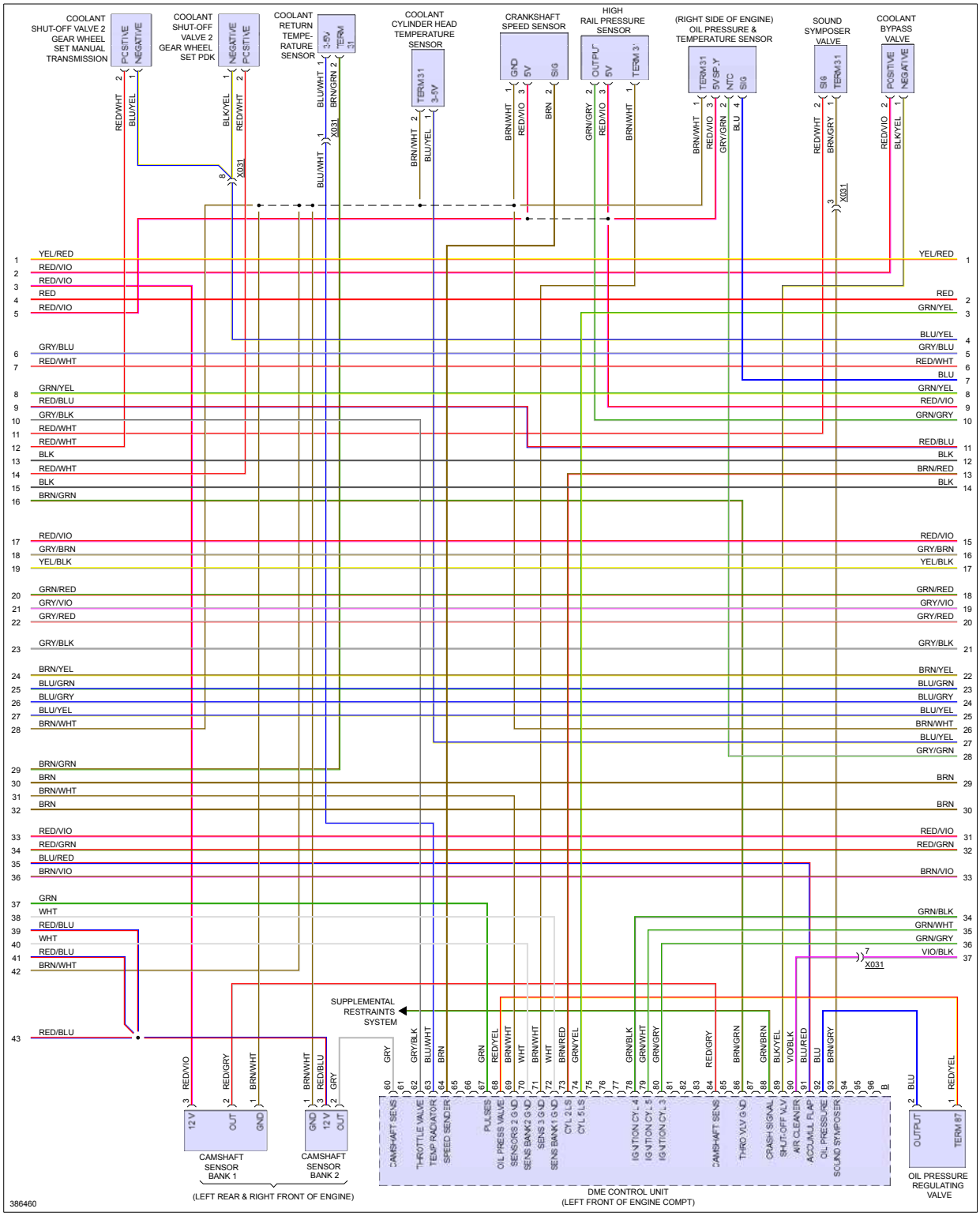

Fig 6: 3.8L, Engine Performance Circuit (6 of 6)

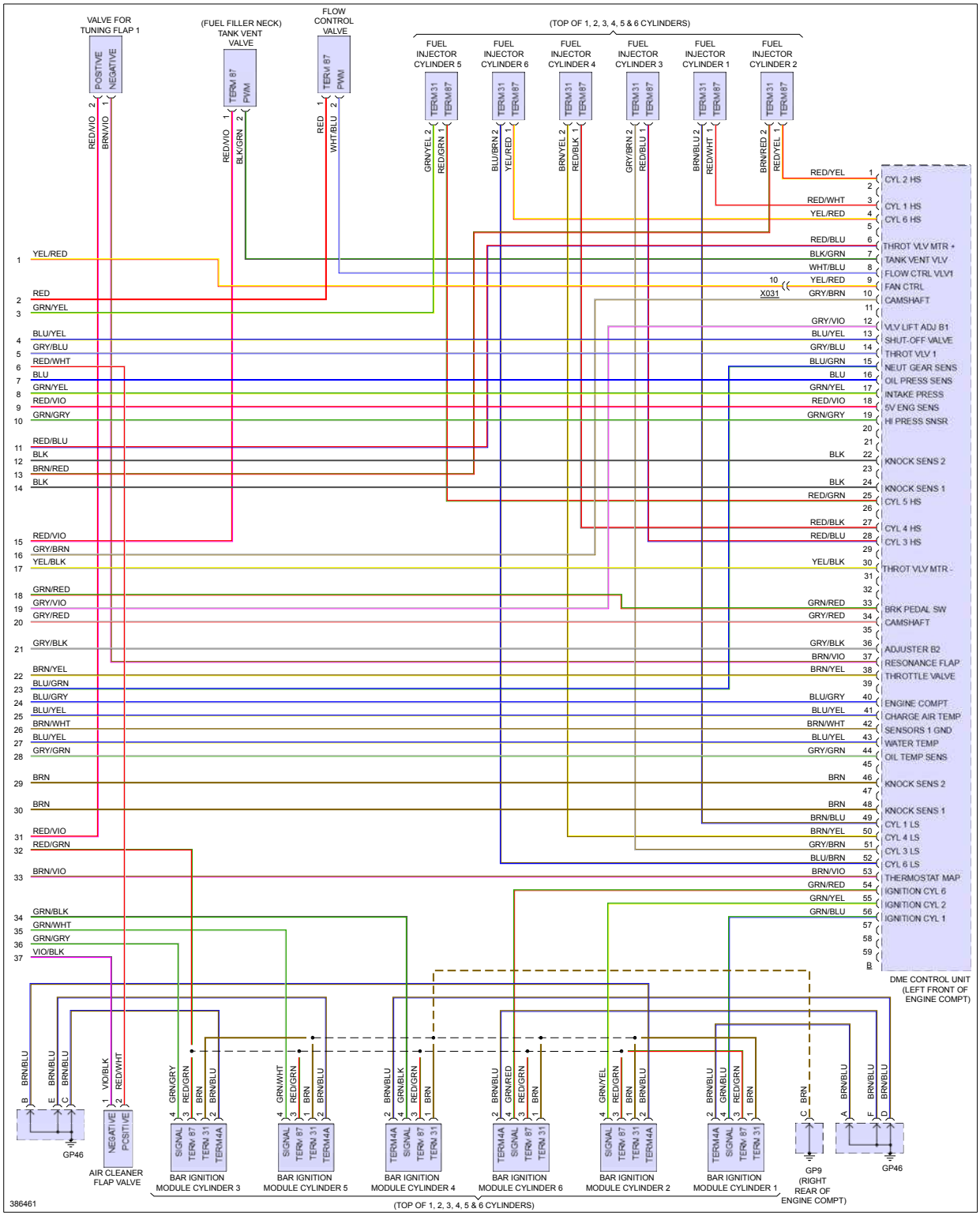

Fig 1: 3.8L Twin Turbo, Engine Performance Circuit (1 of 5)

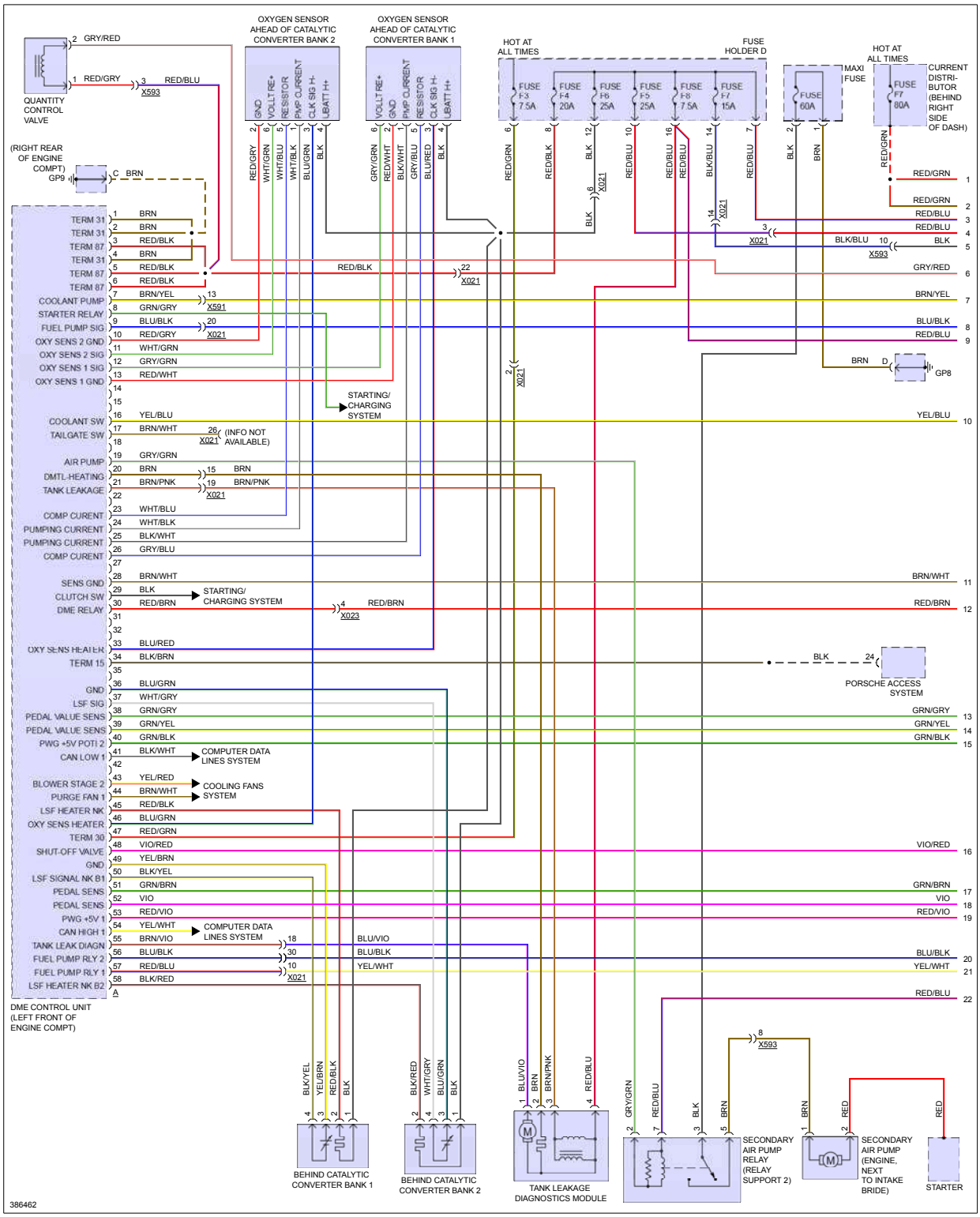

Fig 2: 3.8L Twin Turbo, Engine Performance Circuit (2 of 5)

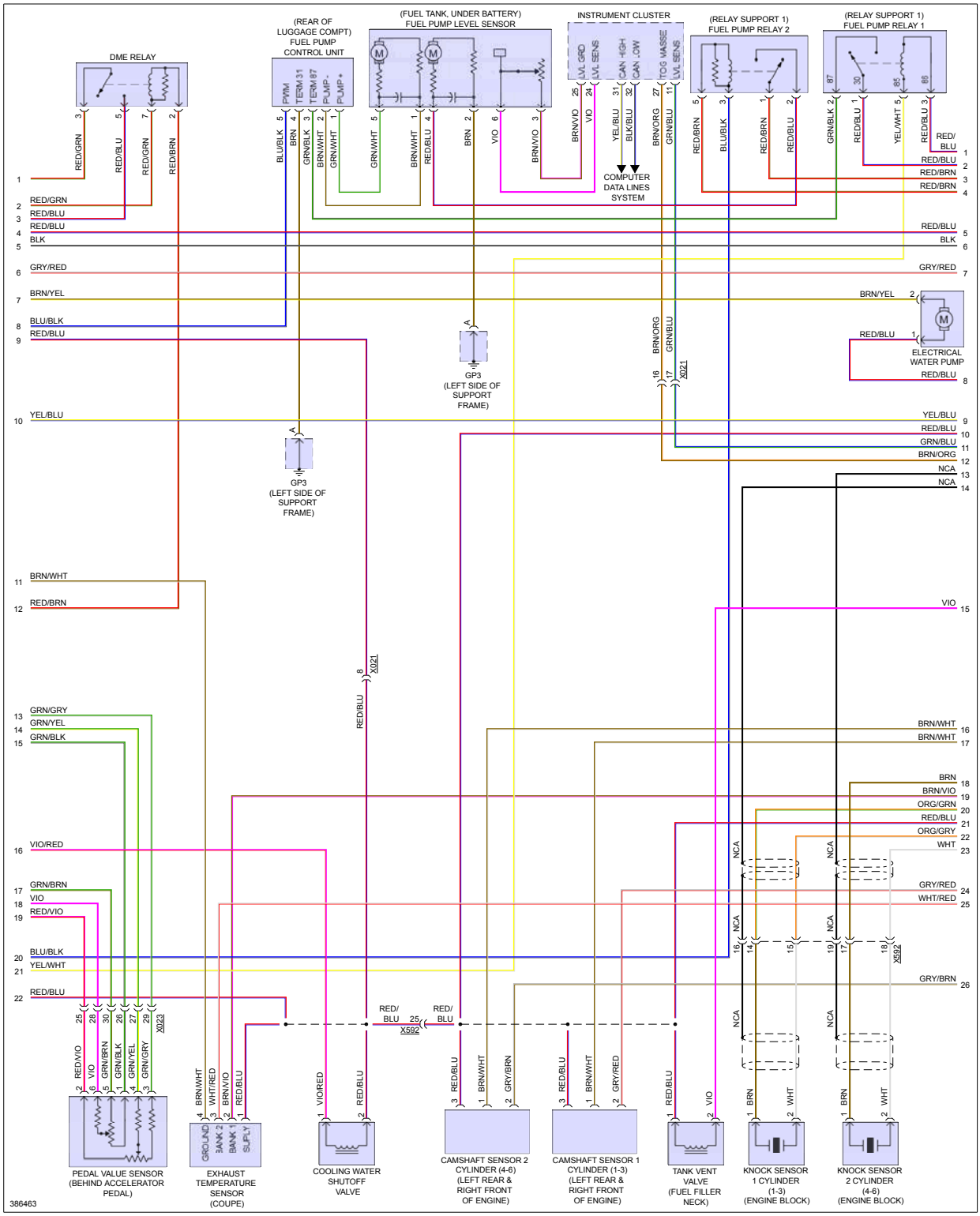

Fig 3: 3.8L Twin Turbo, Engine Performance Circuit (3 of 5)

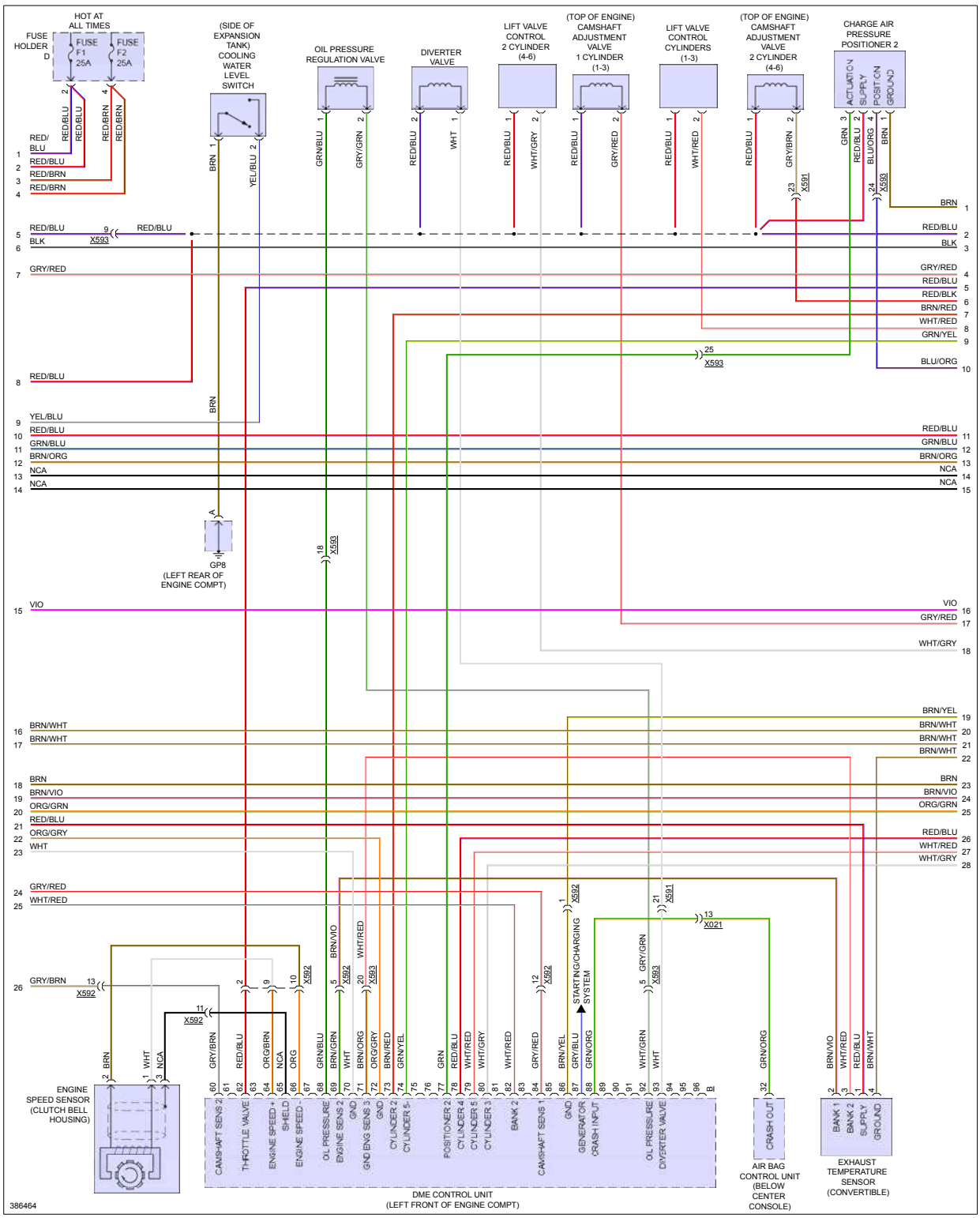

Fig 4: 3.8L Twin Turbo, Engine Performance Circuit (4 of 5)

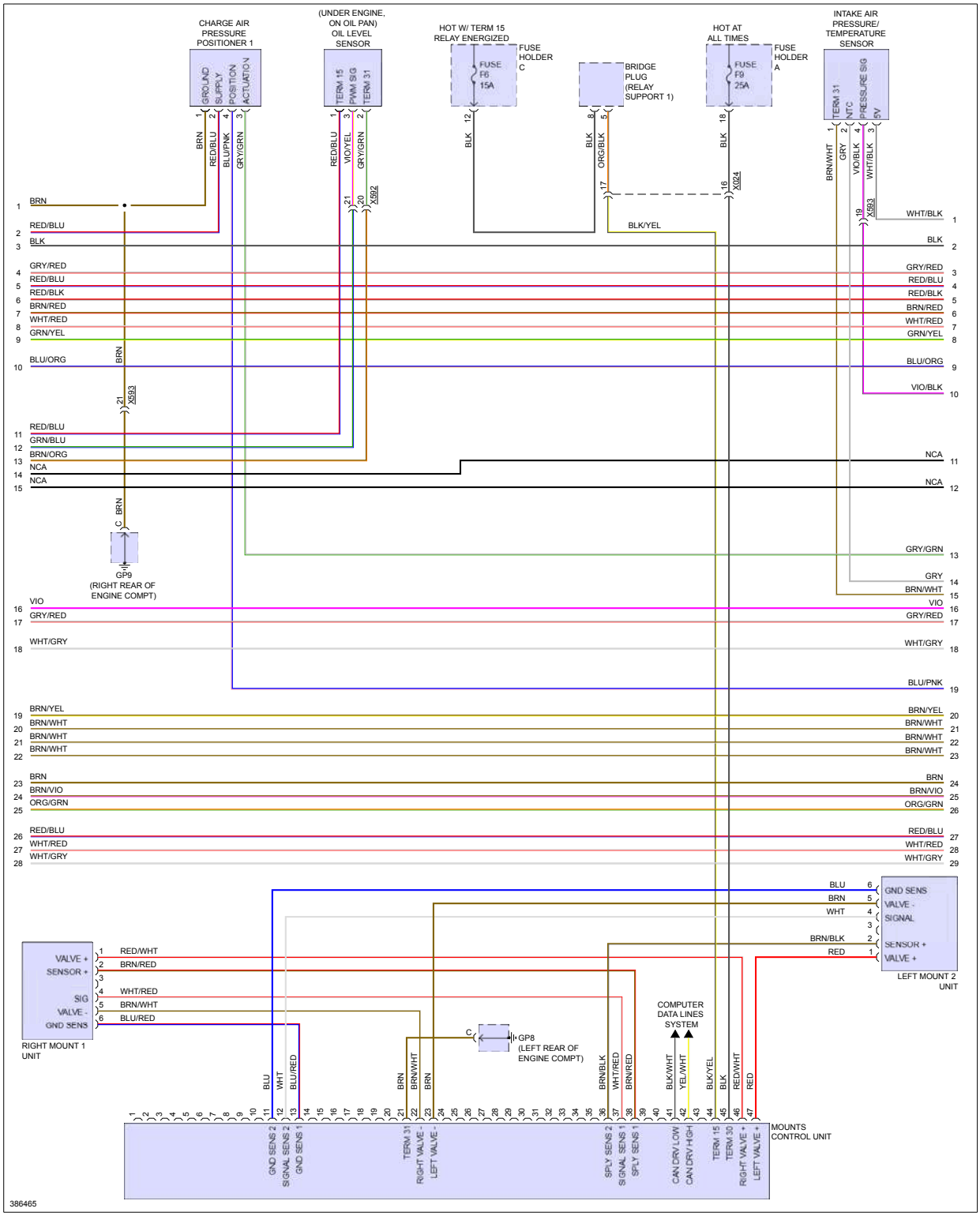

Fig 5: 3.8L Twin Turbo, Engine Performance Circuit (5 of 5)

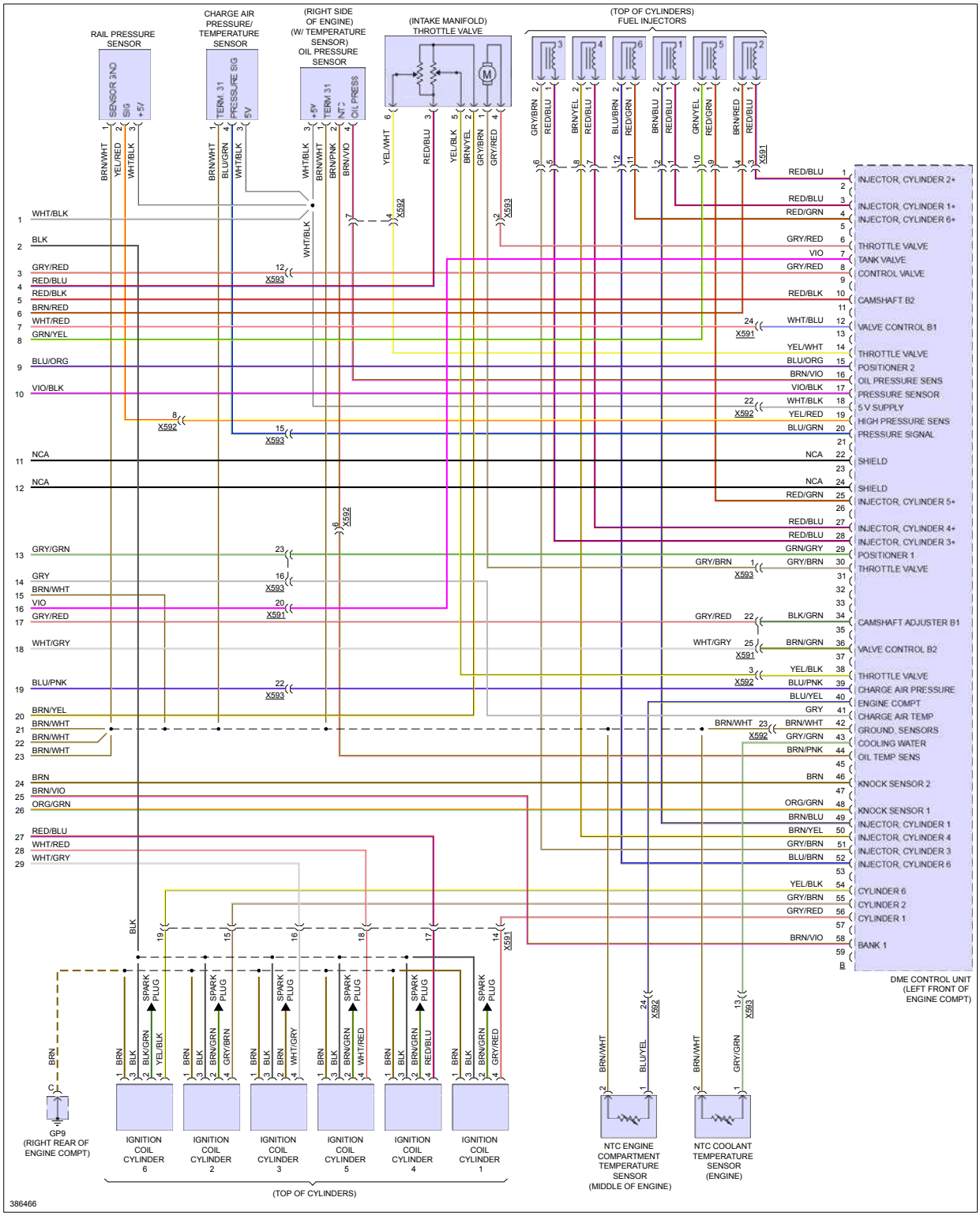

EXTERIOR LIGHTS

Fig 1: Backup Lamps Circuit

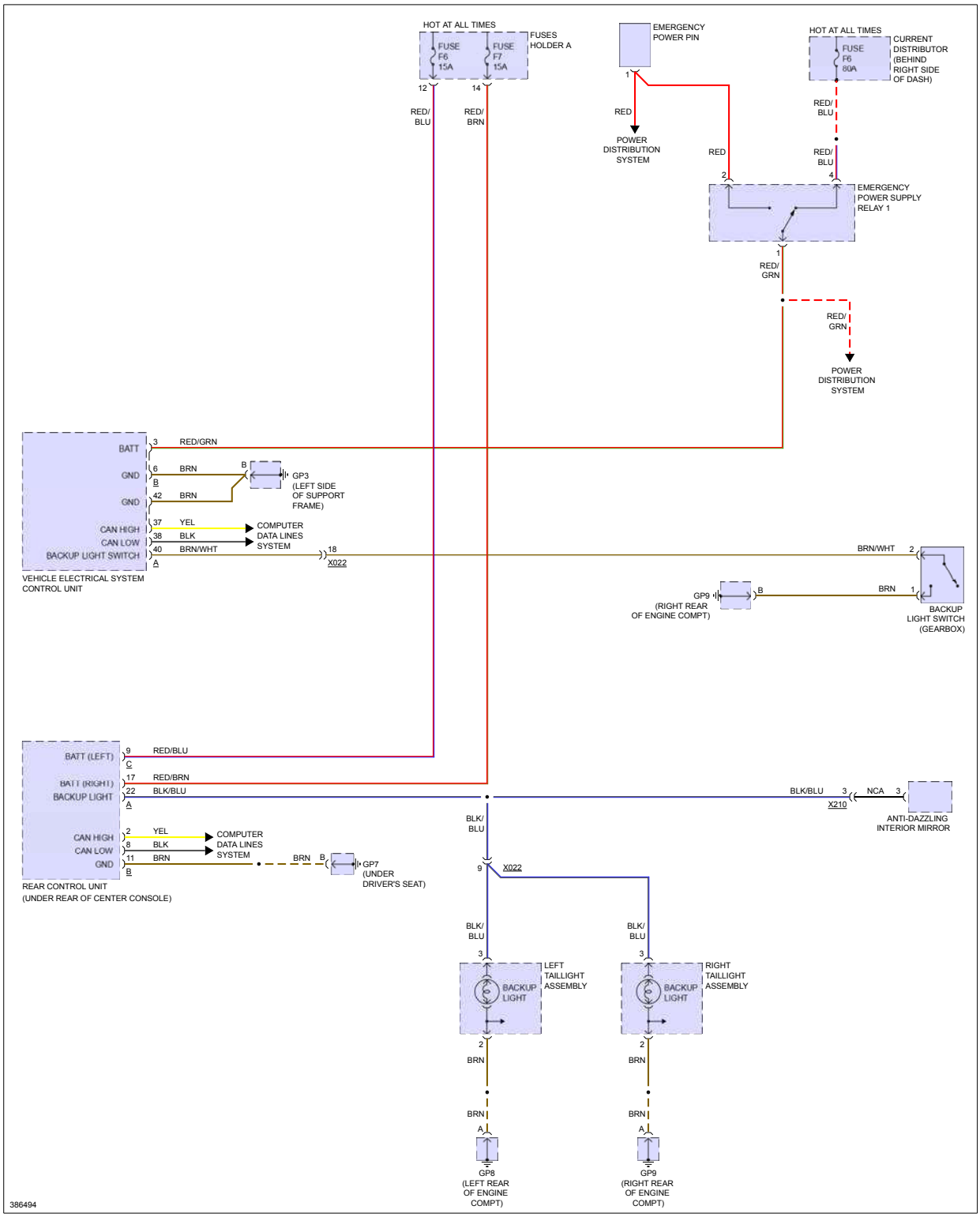

Fig 2: Exterior Lamps Circuit, W/ Turbo (1 of 2)

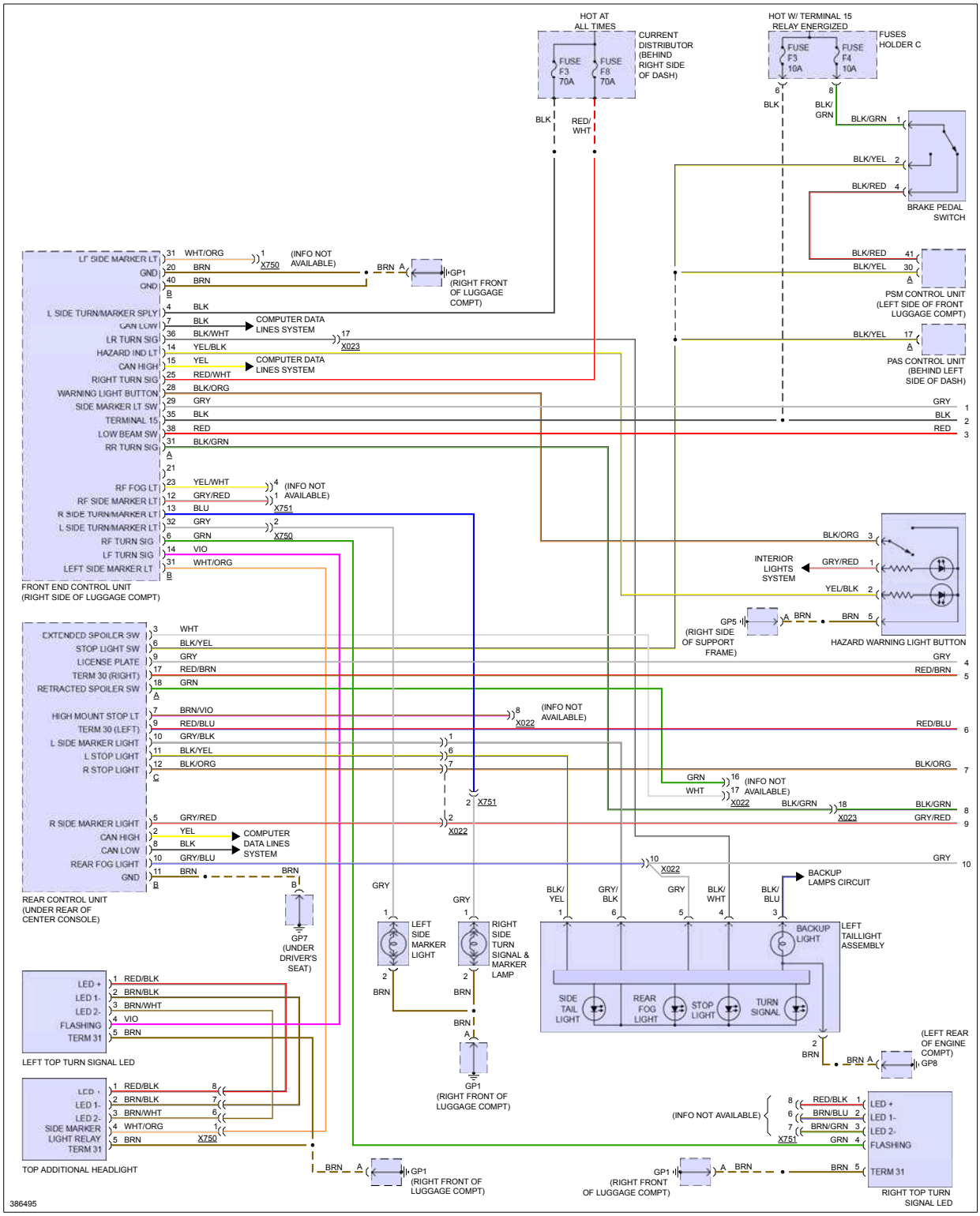

Fig 3: Exterior Lamps Circuit, W/ Turbo (2 of 2)

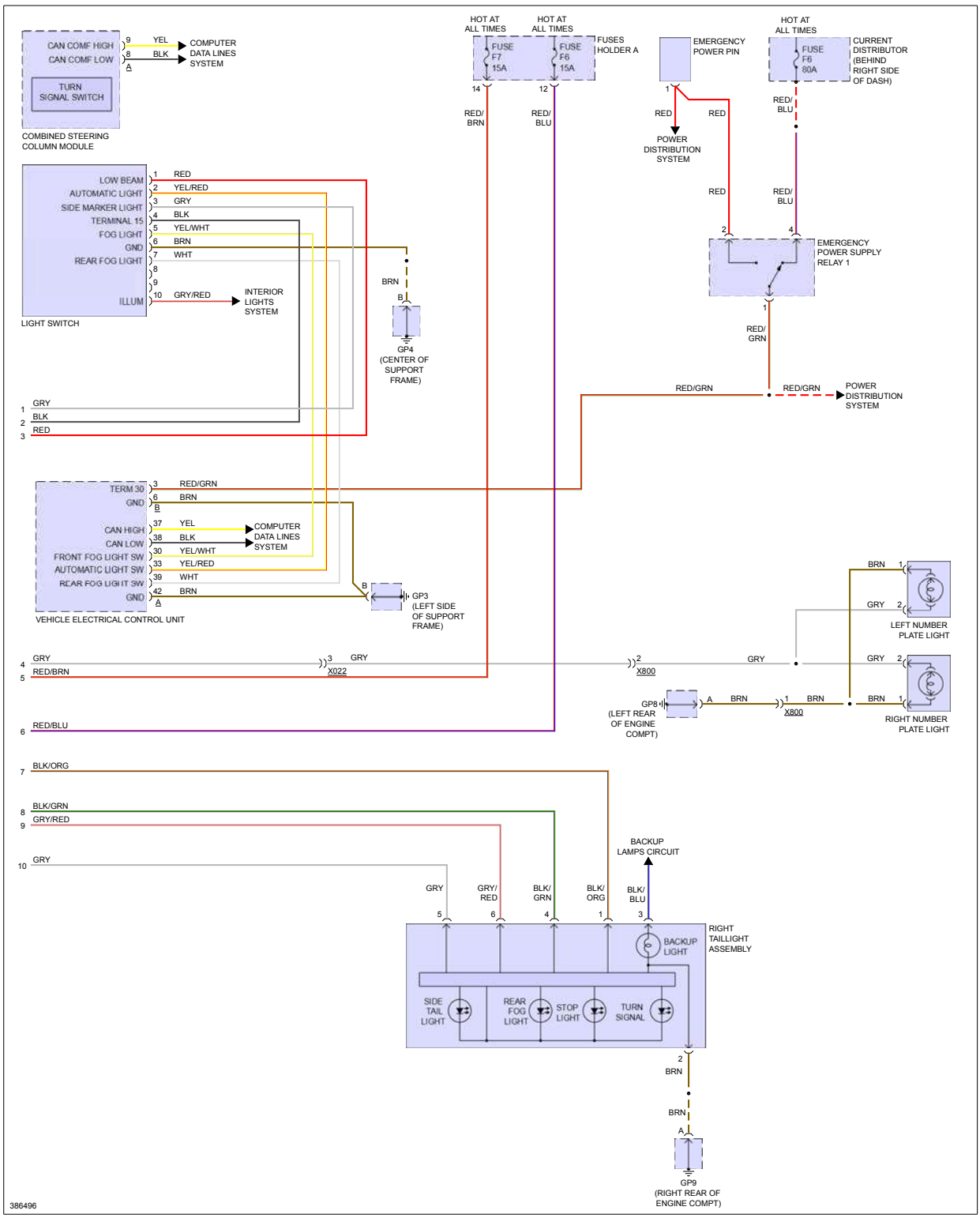

Fig 4: Exterior Lamps Circuit, W/O Turbo (1 of 2)

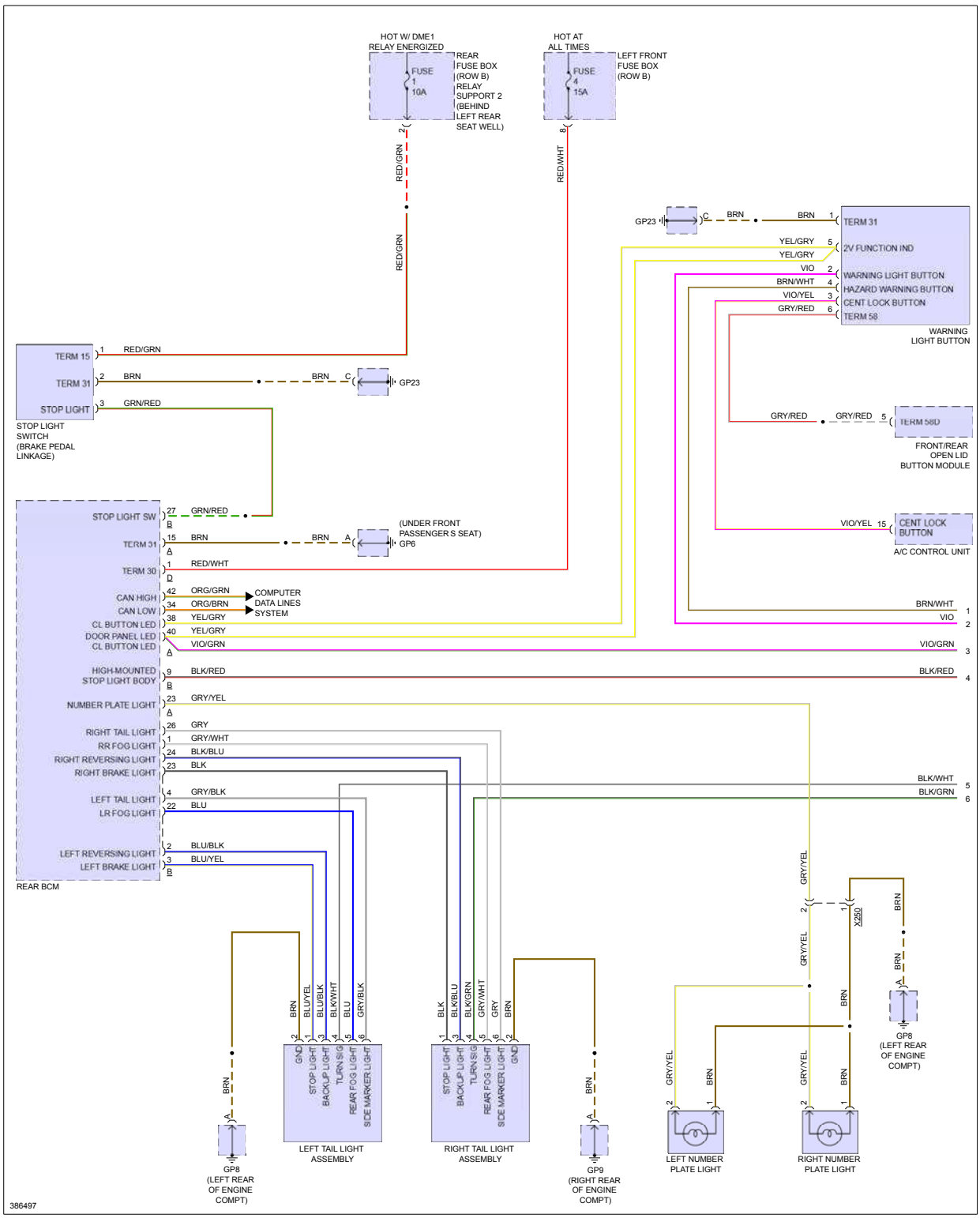

Fig 5: Exterior Lamps Circuit, W/O Turbo (2 of 2)

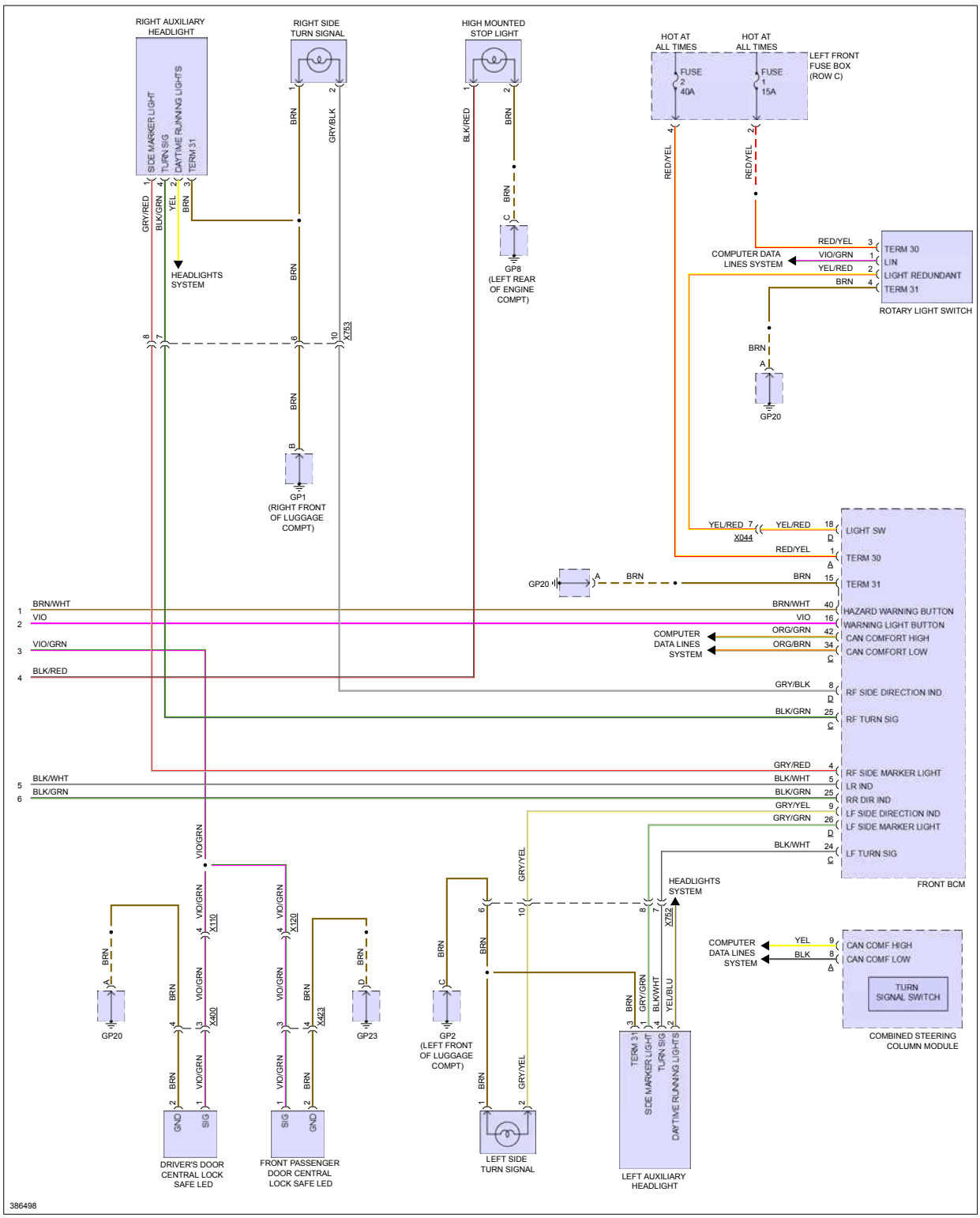

GROUND DISTRIBUTION

Fig 1: Ground Distribution Circuit, W/ Turbo (1 of 4)

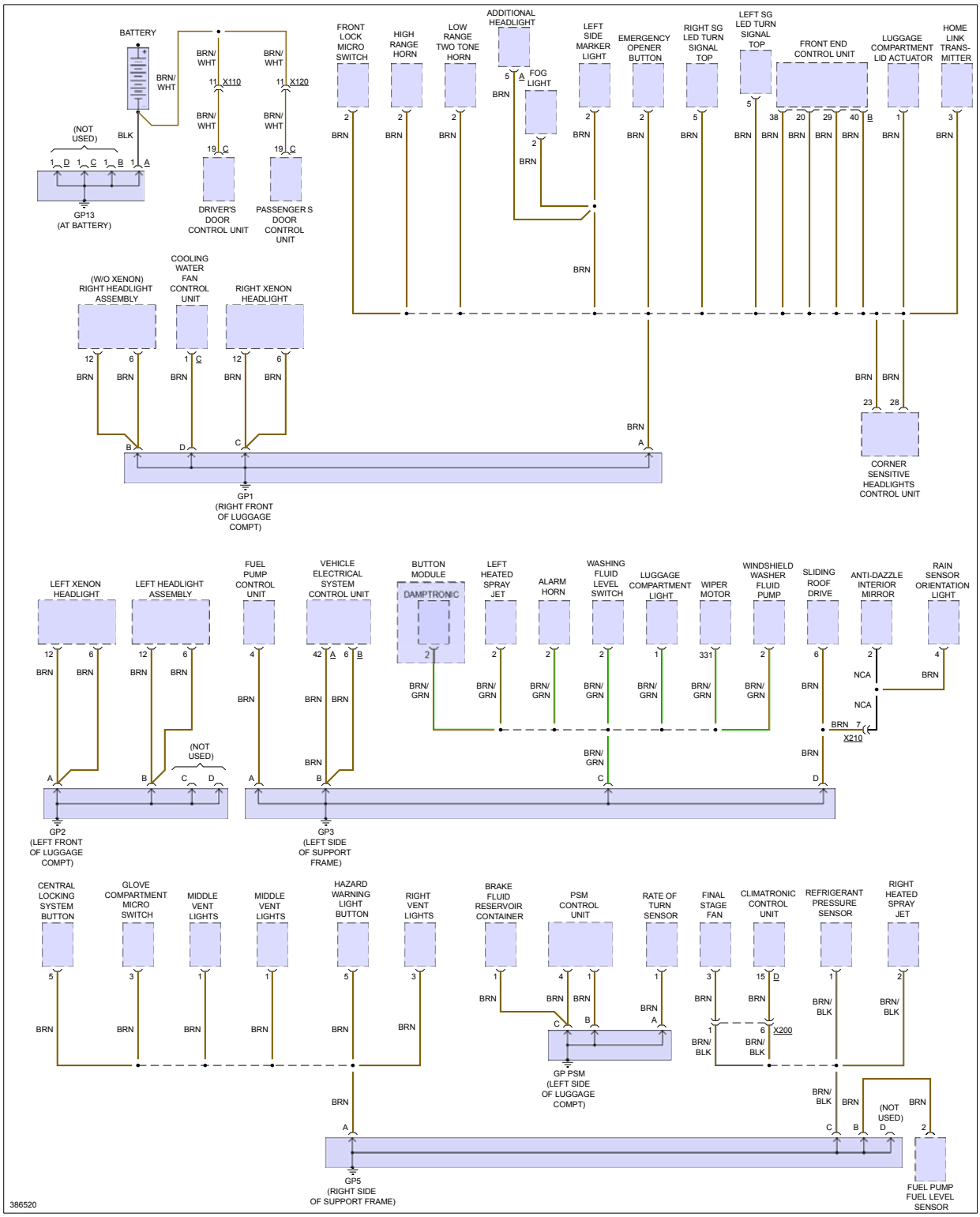

Fig 2: Ground Distribution Circuit, W/ Turbo (2 of 4)

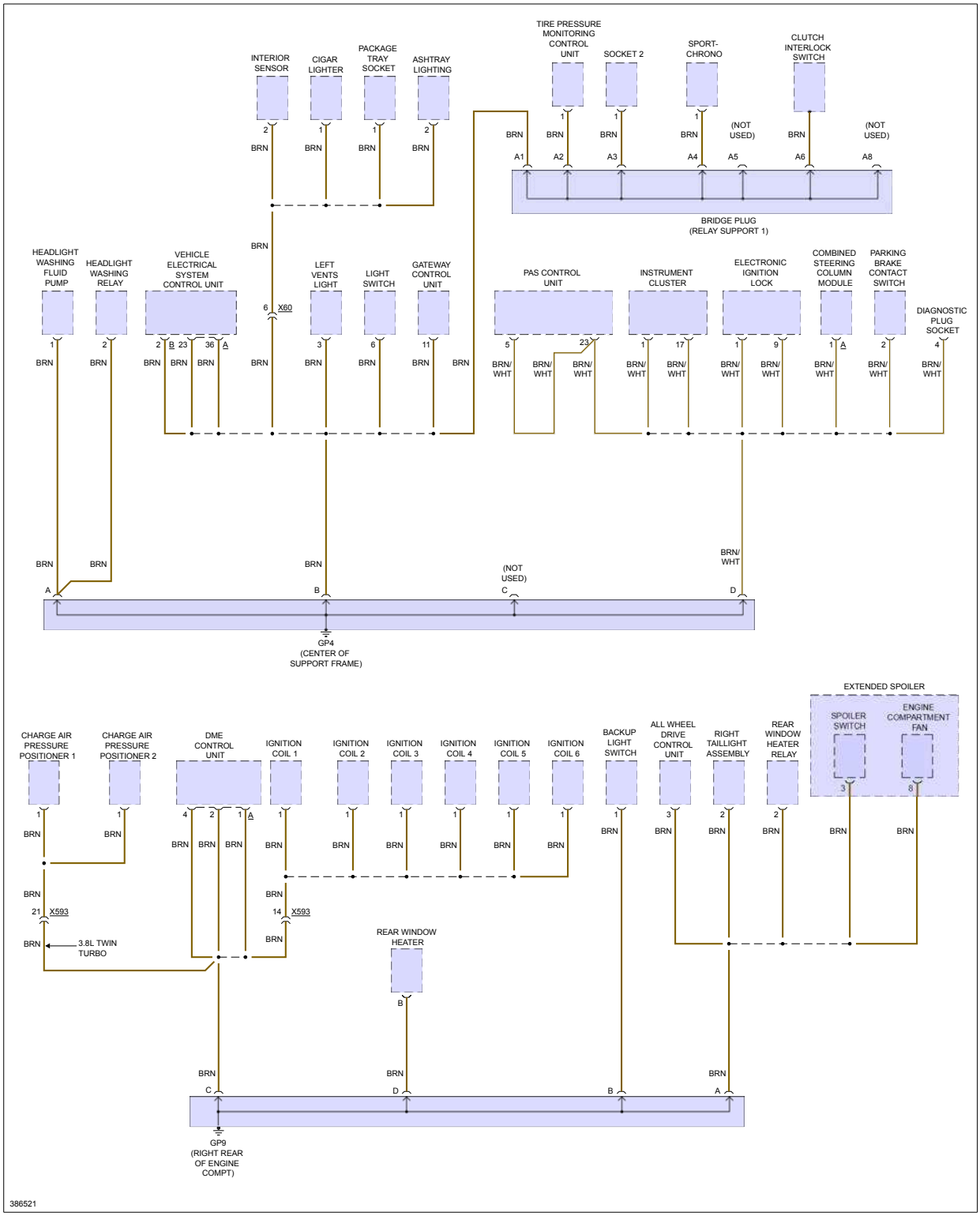

Fig 3: Ground Distribution Circuit, W/ Turbo (3 of 4)

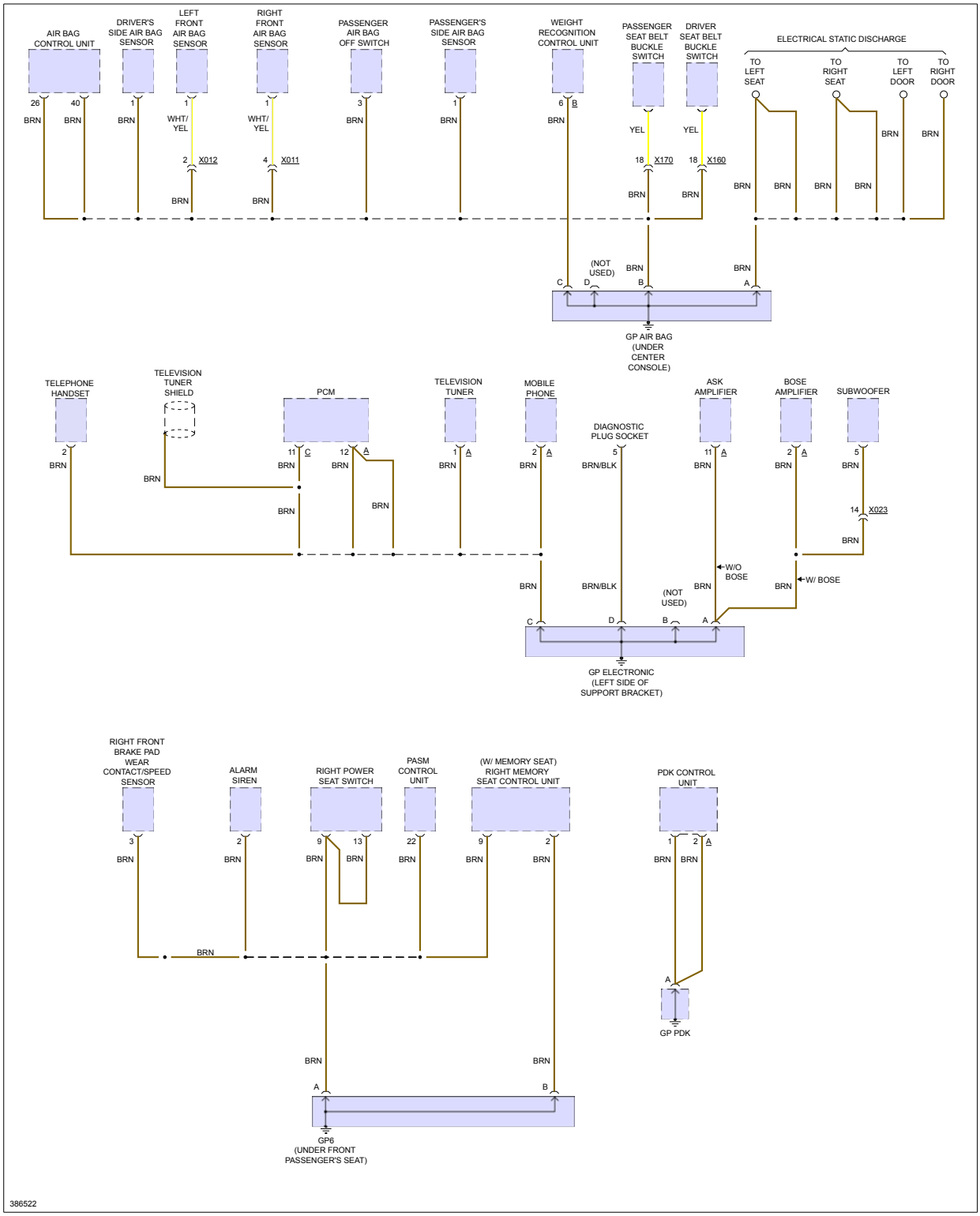

Fig 4: Ground Distribution Circuit, W/ Turbo (4 of 4)

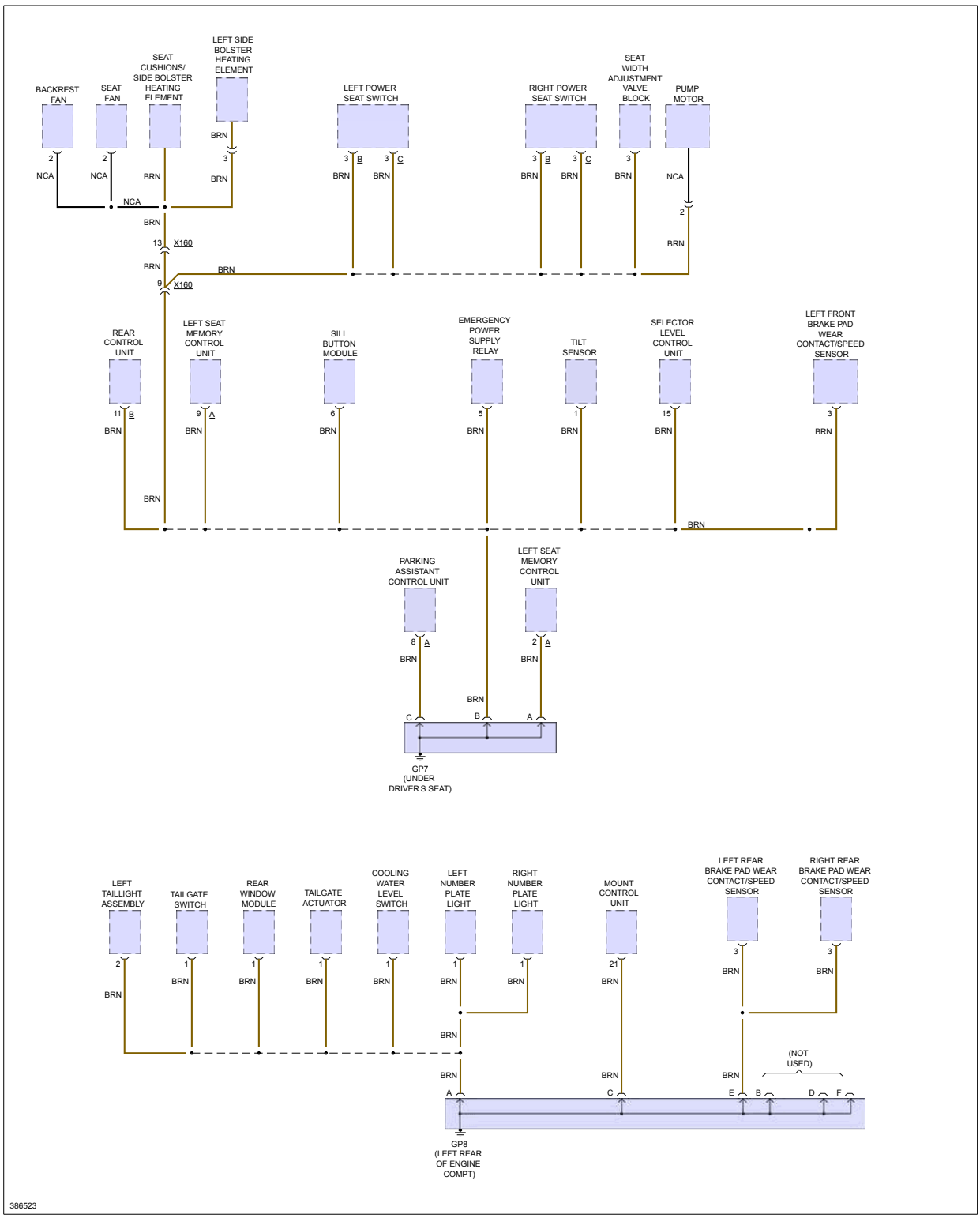

Fig 5: Ground Distribution Circuit, W/O Turbo (1 of 5)

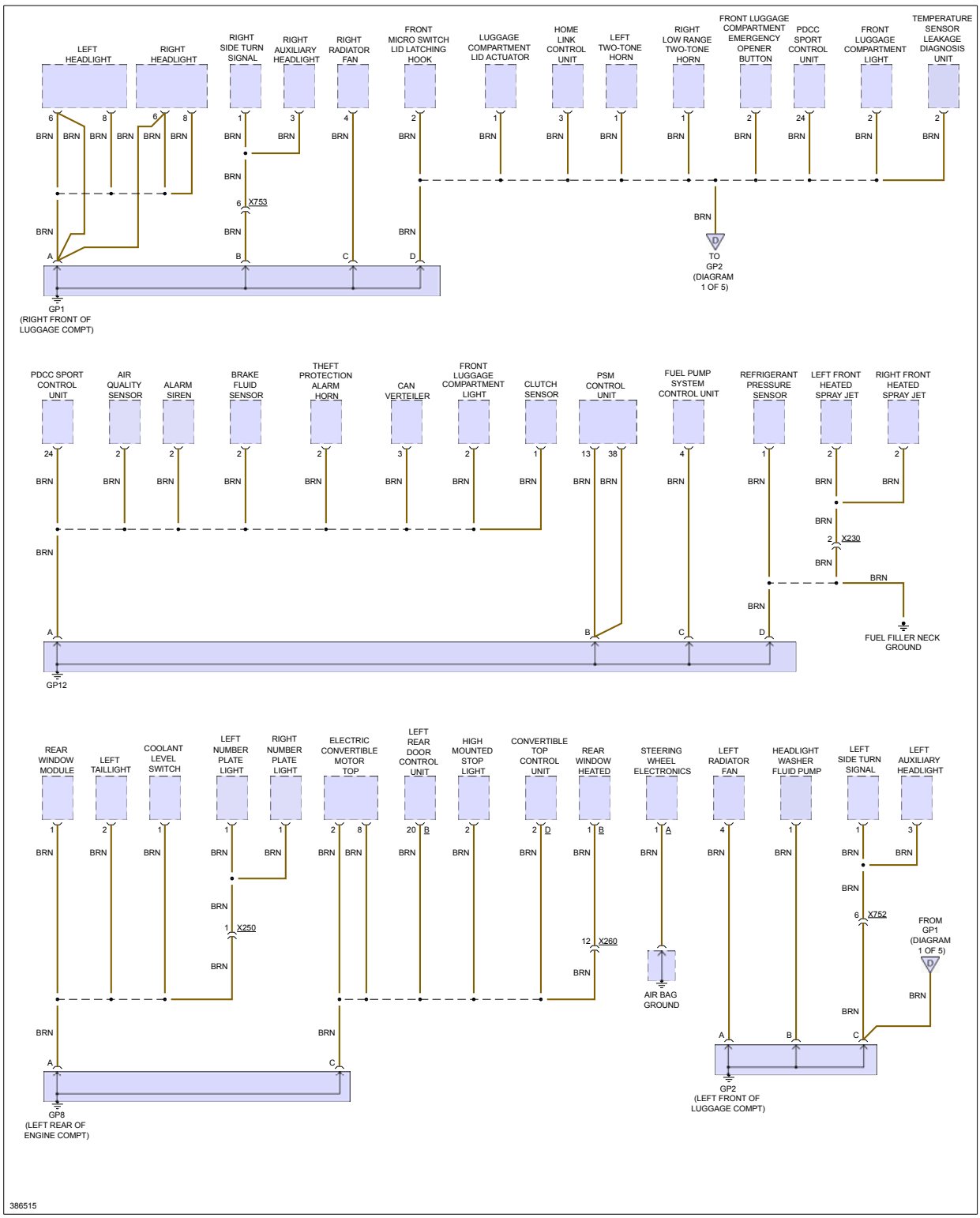

Fig 6: Ground Distribution Circuit, W/O Turbo (2 of 5)

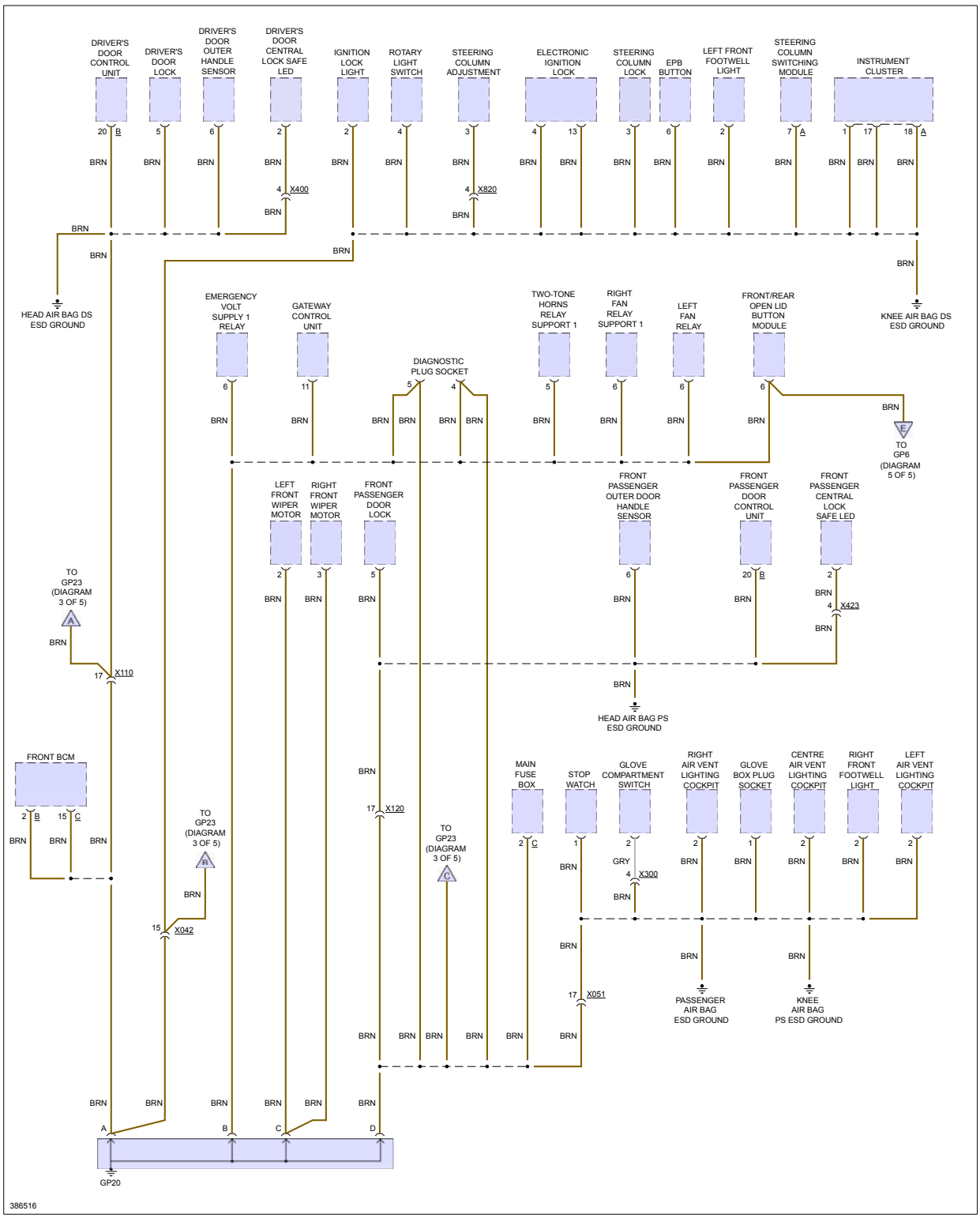

Fig 7: Ground Distribution Circuit, W/O Turbo (3 of 5)

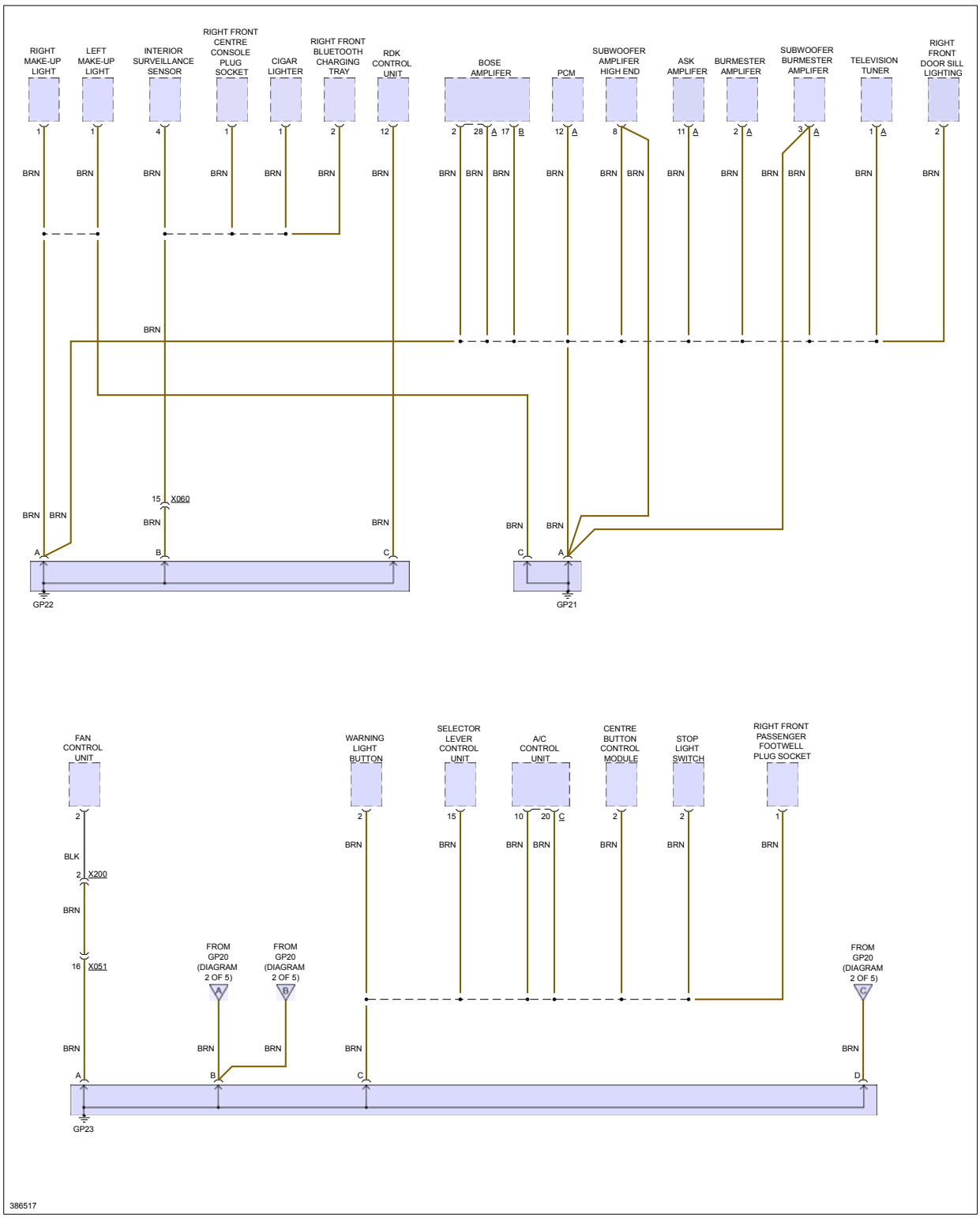

Fig 8: Ground Distribution Circuit, W/O Turbo (4 of 5)

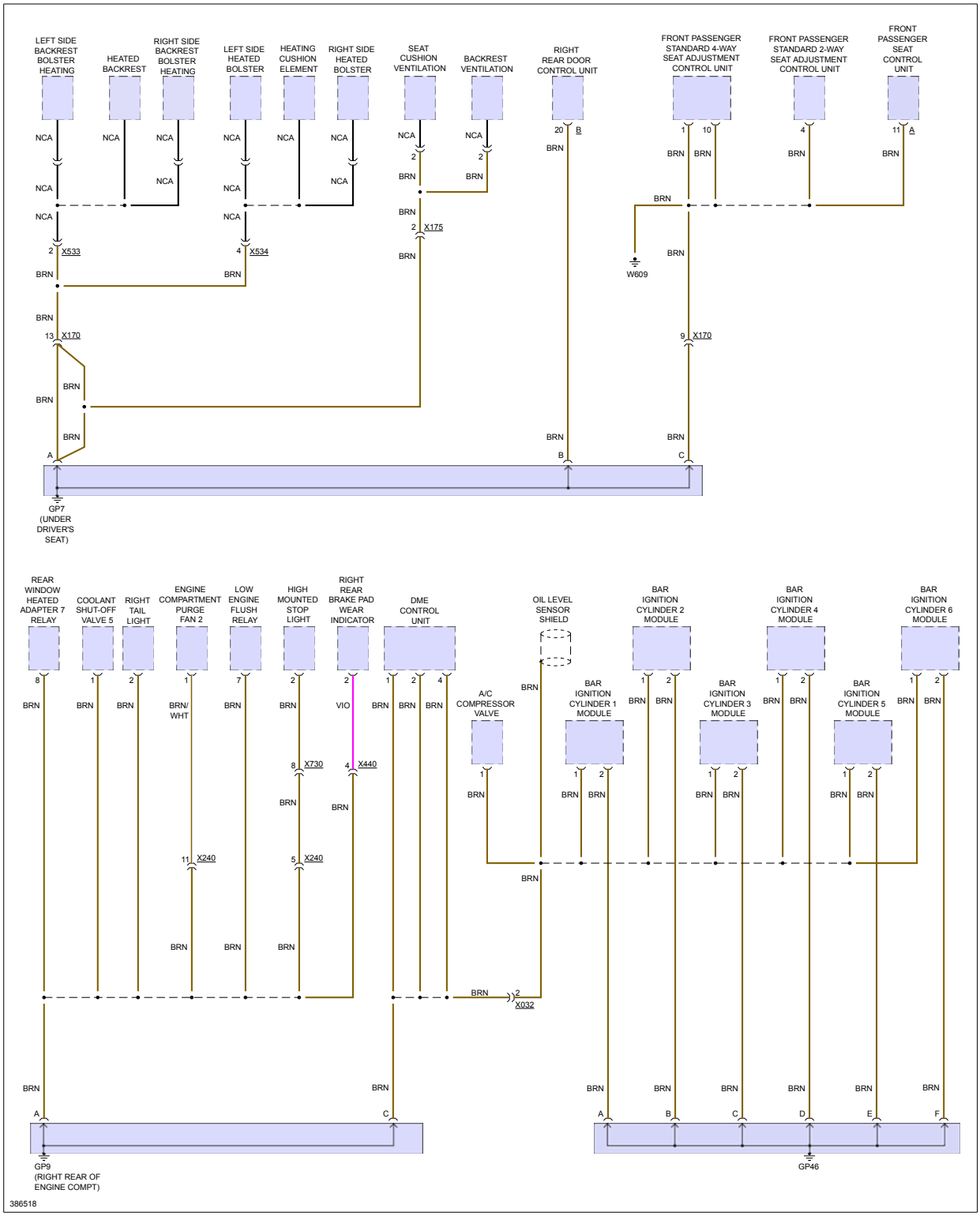

Fig 9: Ground Distribution Circuit, W/O Turbo (5 of 5)

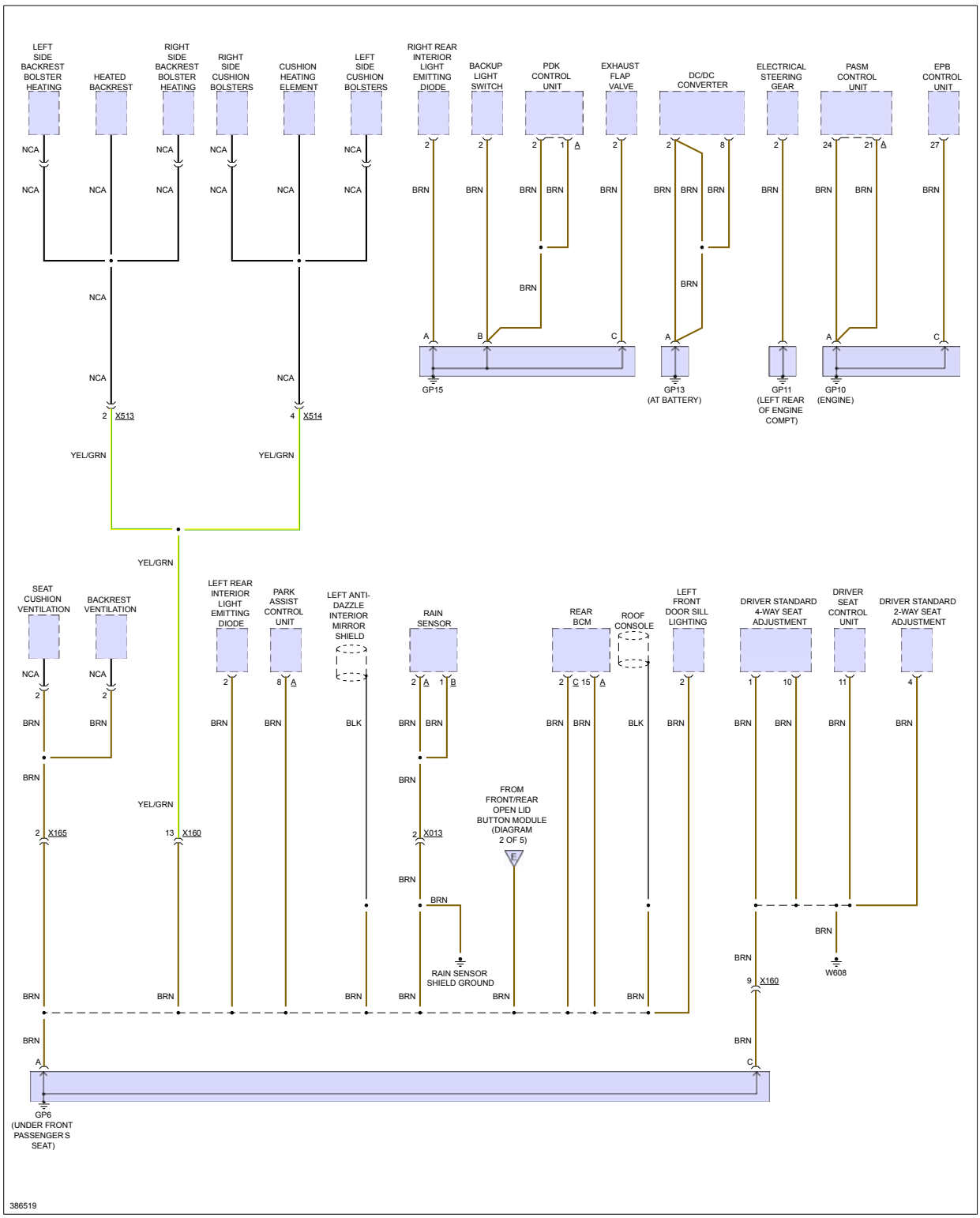

HEADLIGHTS

Fig 1: Headlights Circuit, W/O Turbo W/O Cornering Headlights (1 of 2)

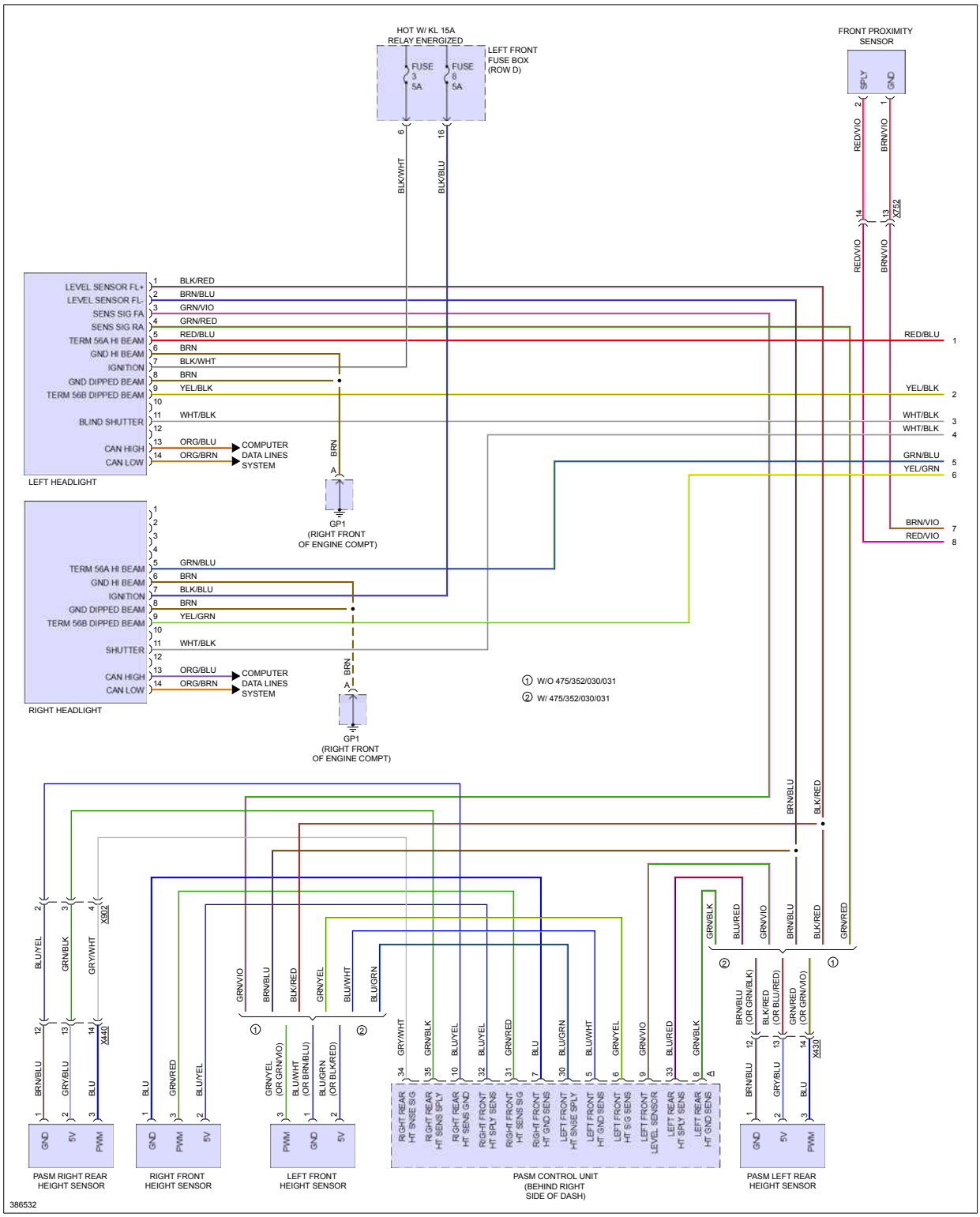

Fig 2: Headlights Circuit, W/O Turbo W/O Cornering Headlights (2 of 2)

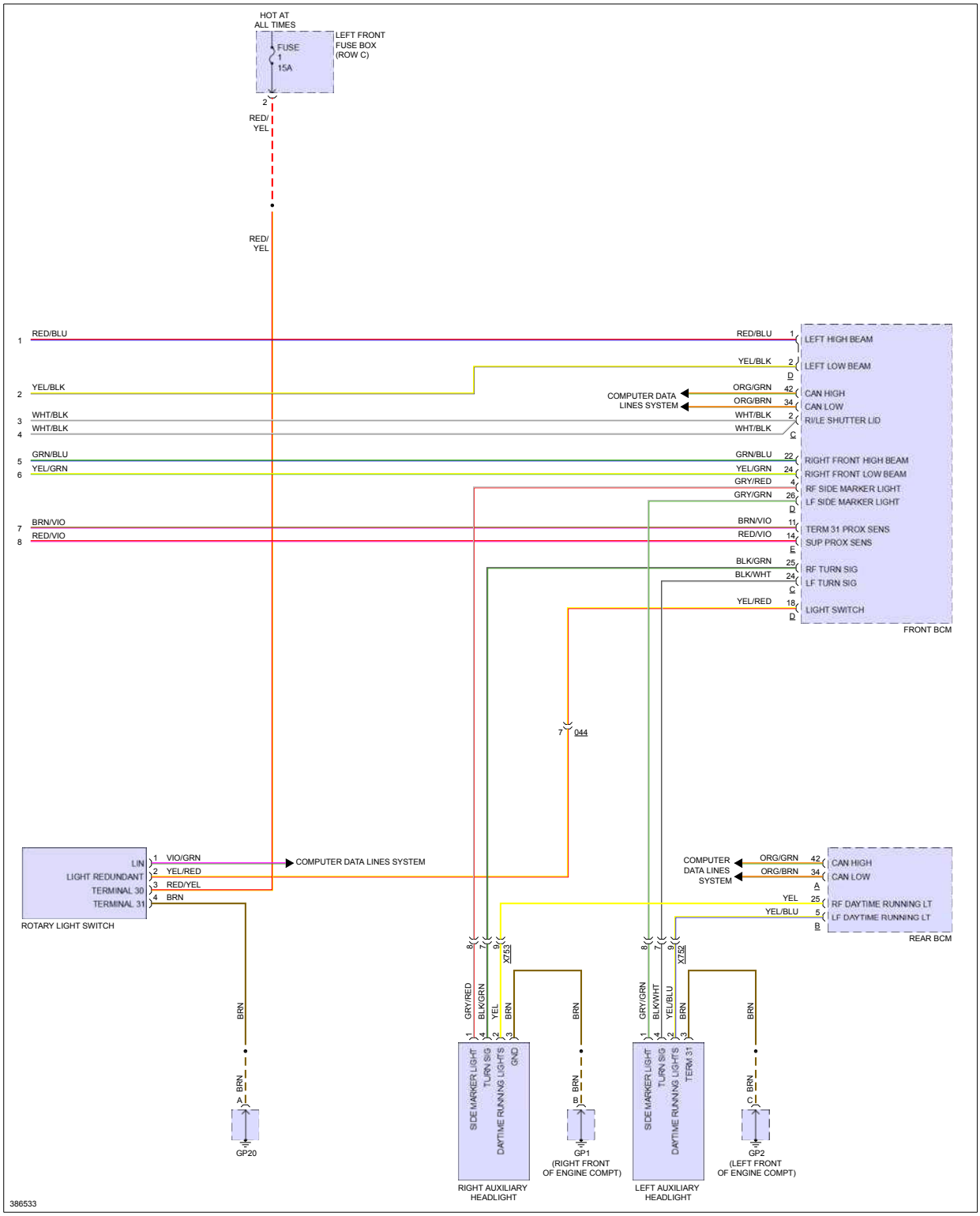

Fig 3: Headlights Circuit, W/Turbo W/ Cornering Headlights

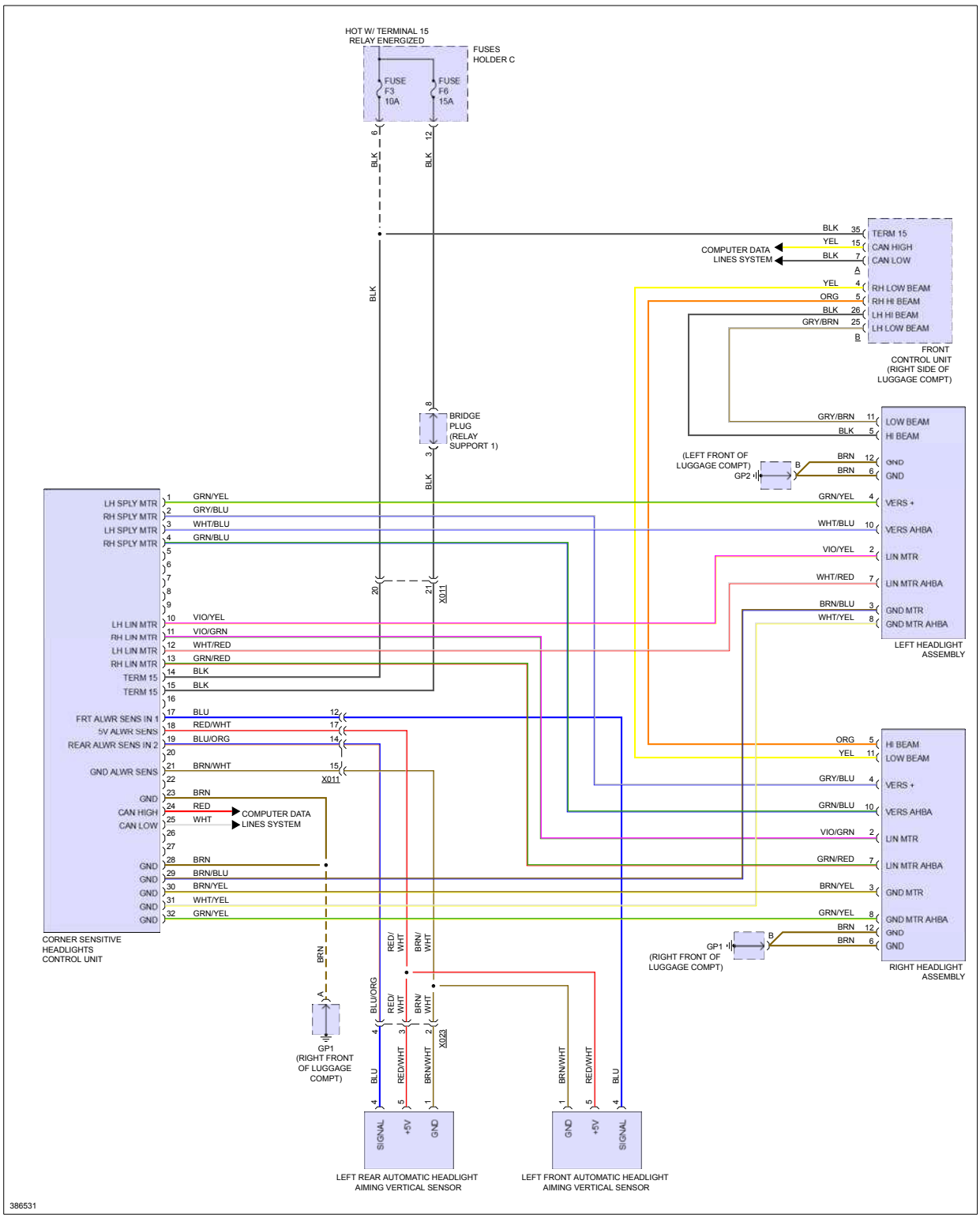

Fig 4: Headlights Circuit, W/Turbo W/O Cornering Headlights

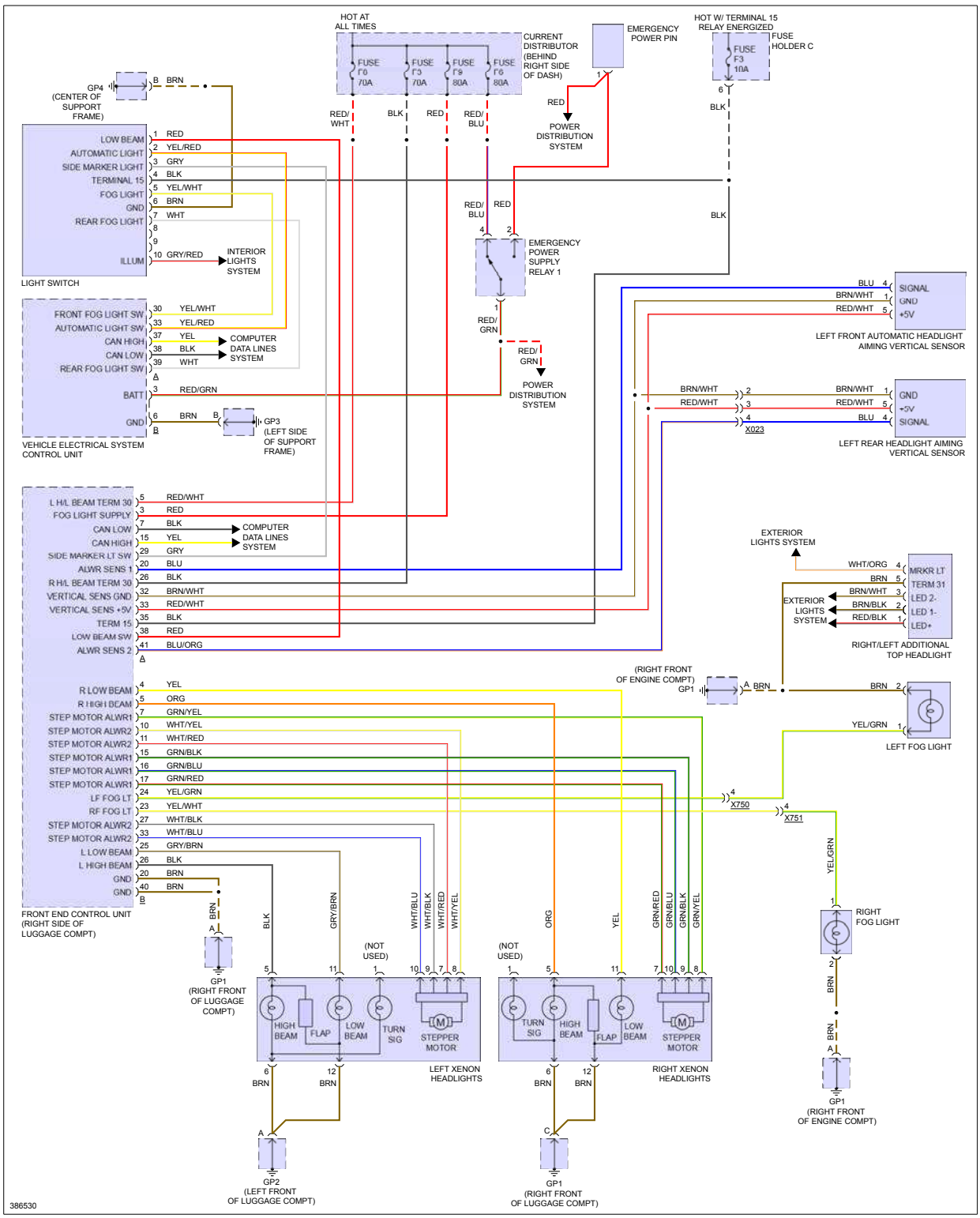

HORN

Fig 1: Horn Circuit, W/ Turbo

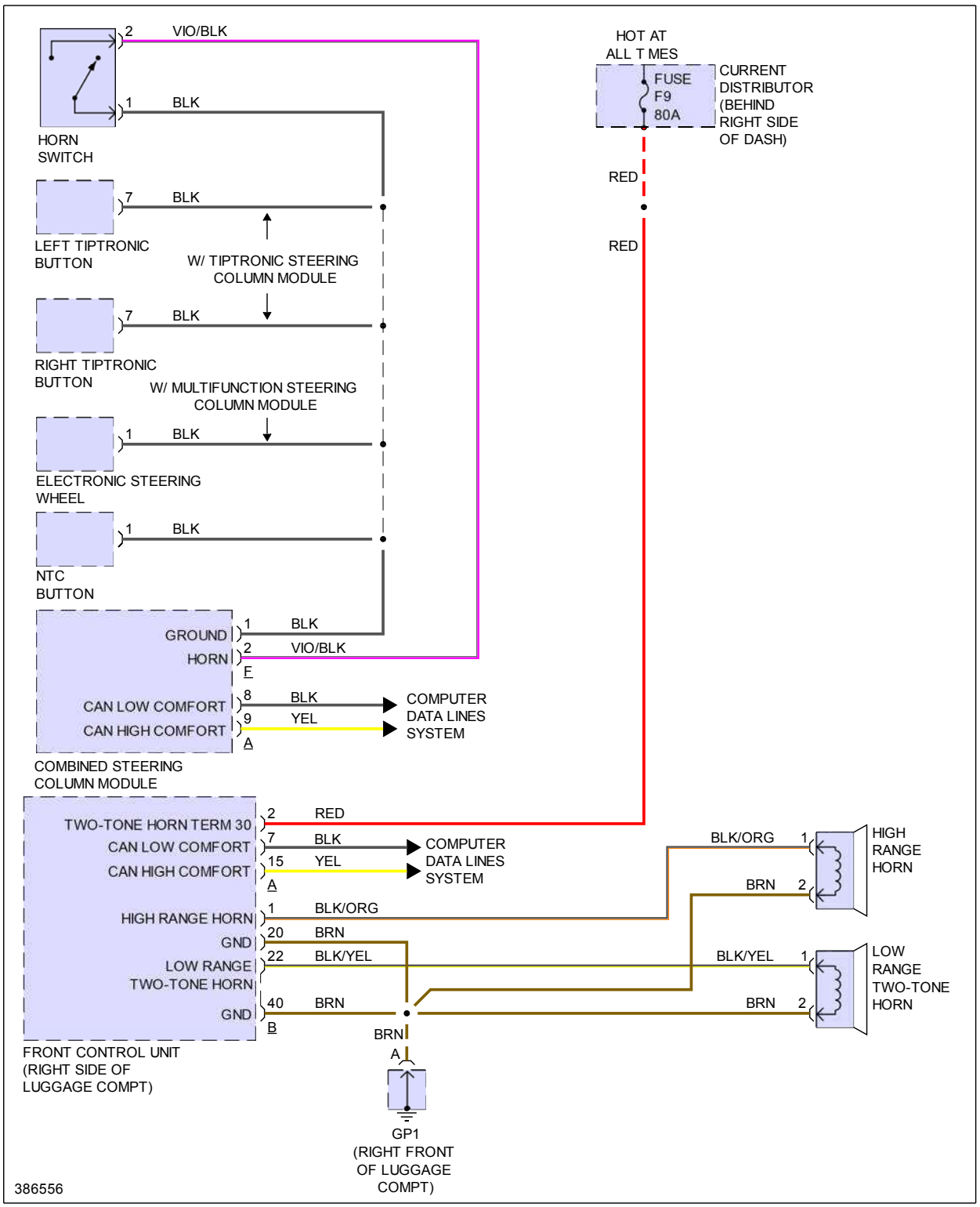

Fig 2: Horn Circuit, W/O Turbo

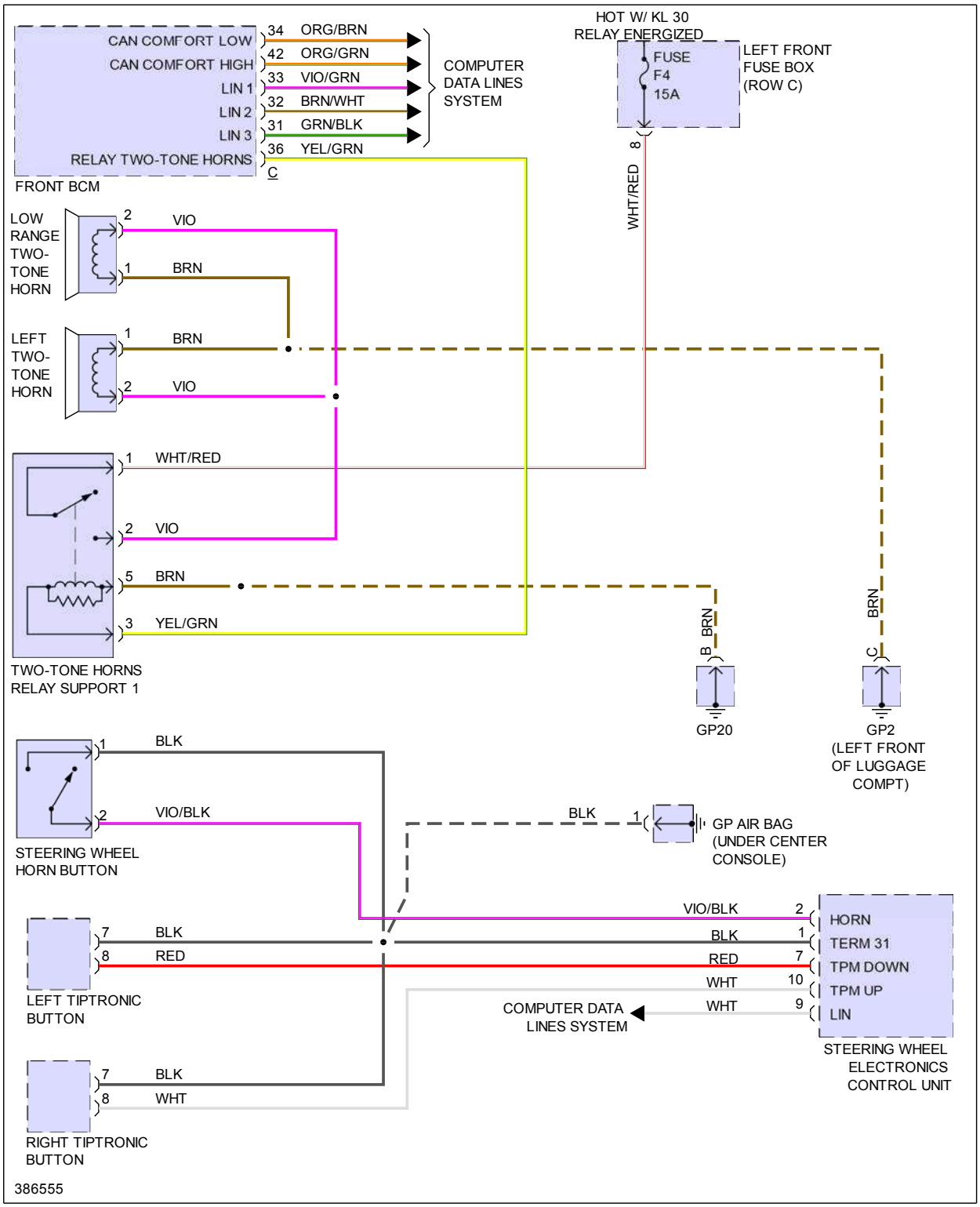

INSTRUMENT CLUSTER

Fig 1: Instrument Cluster Circuit, W/ Turbo

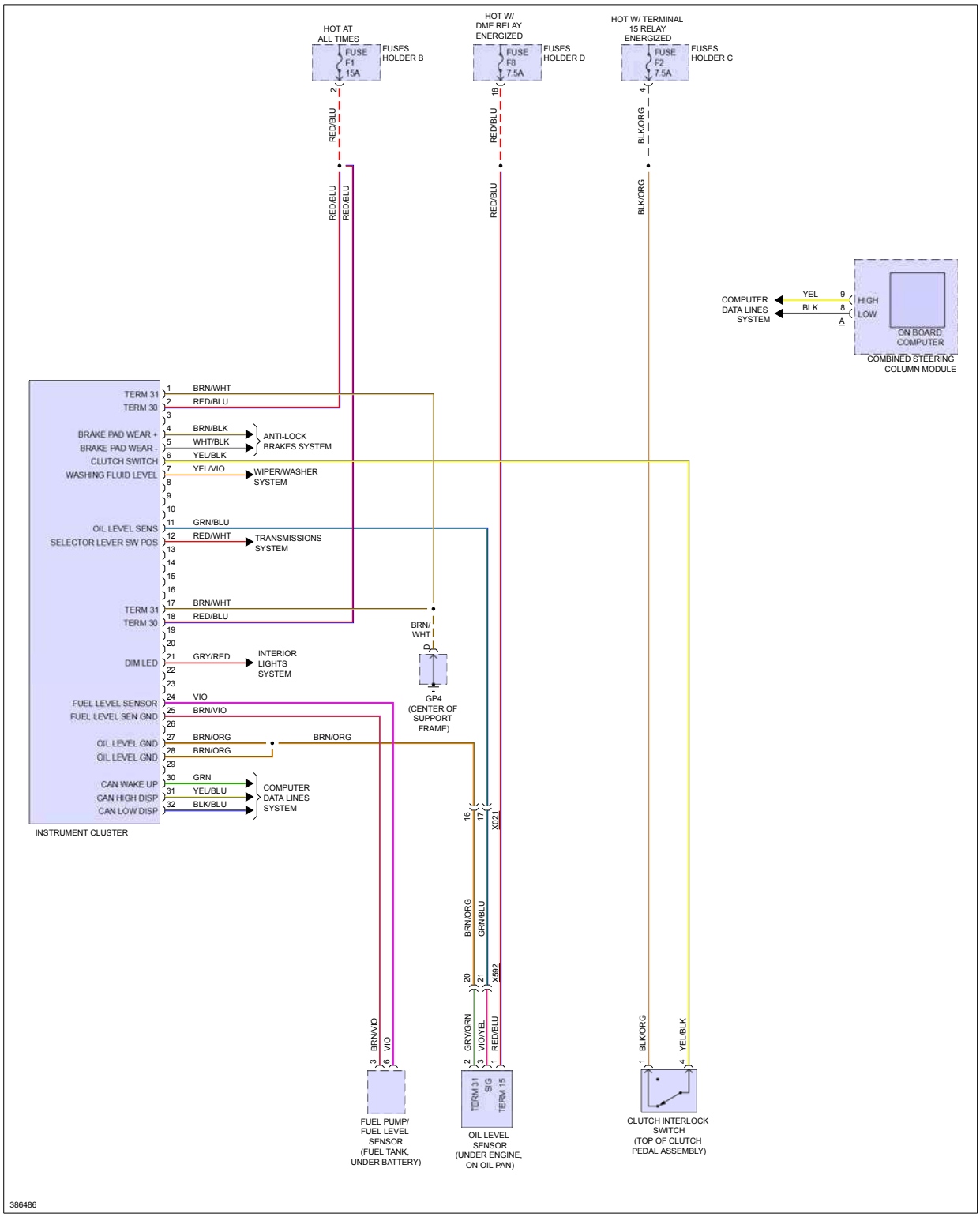

Fig 2: Instrument Cluster Circuit, W/O Turbo

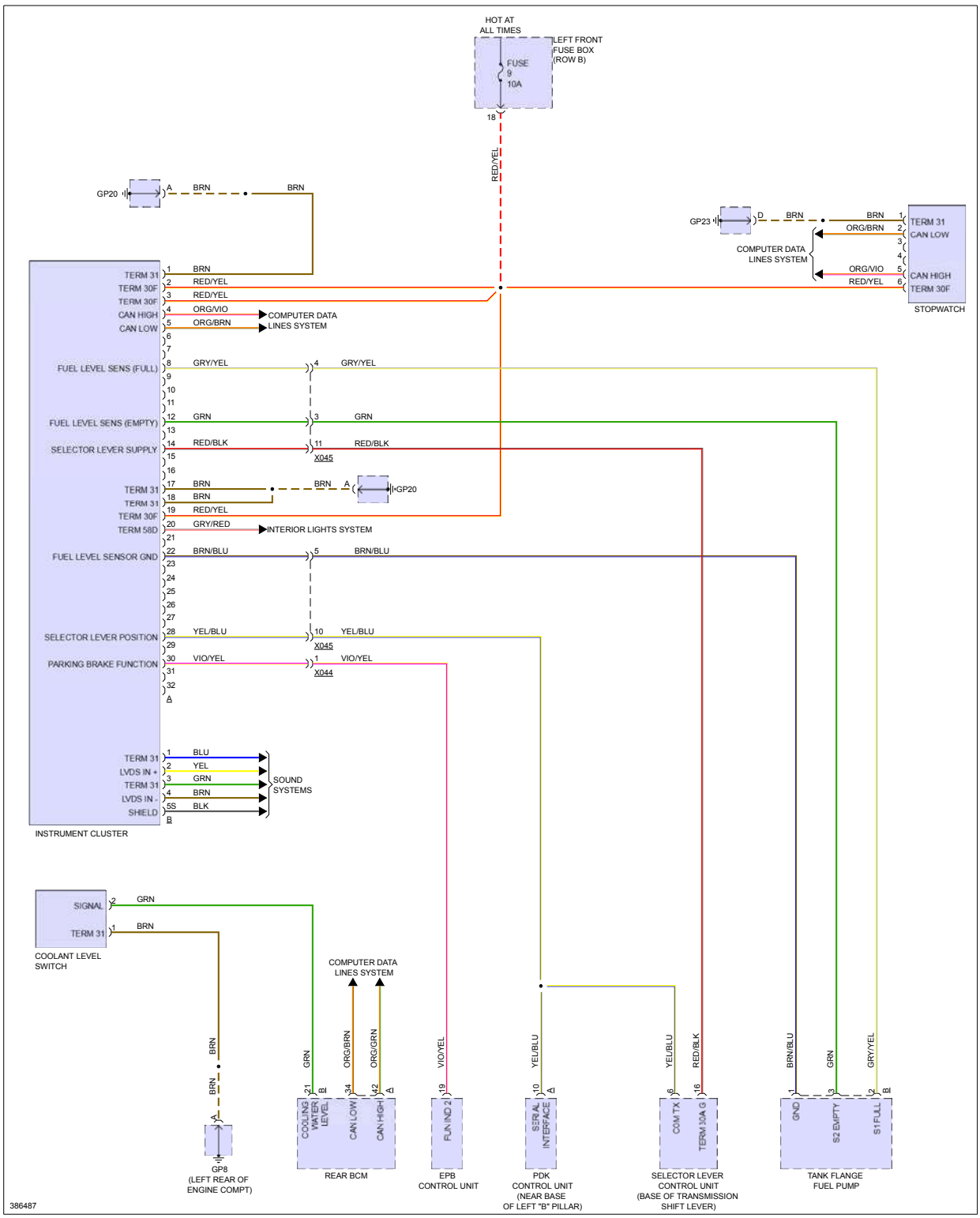

INTERIOR LIGHTS

Fig 1: Interior Lights Circuit, W/ Turbo (1 of 2)

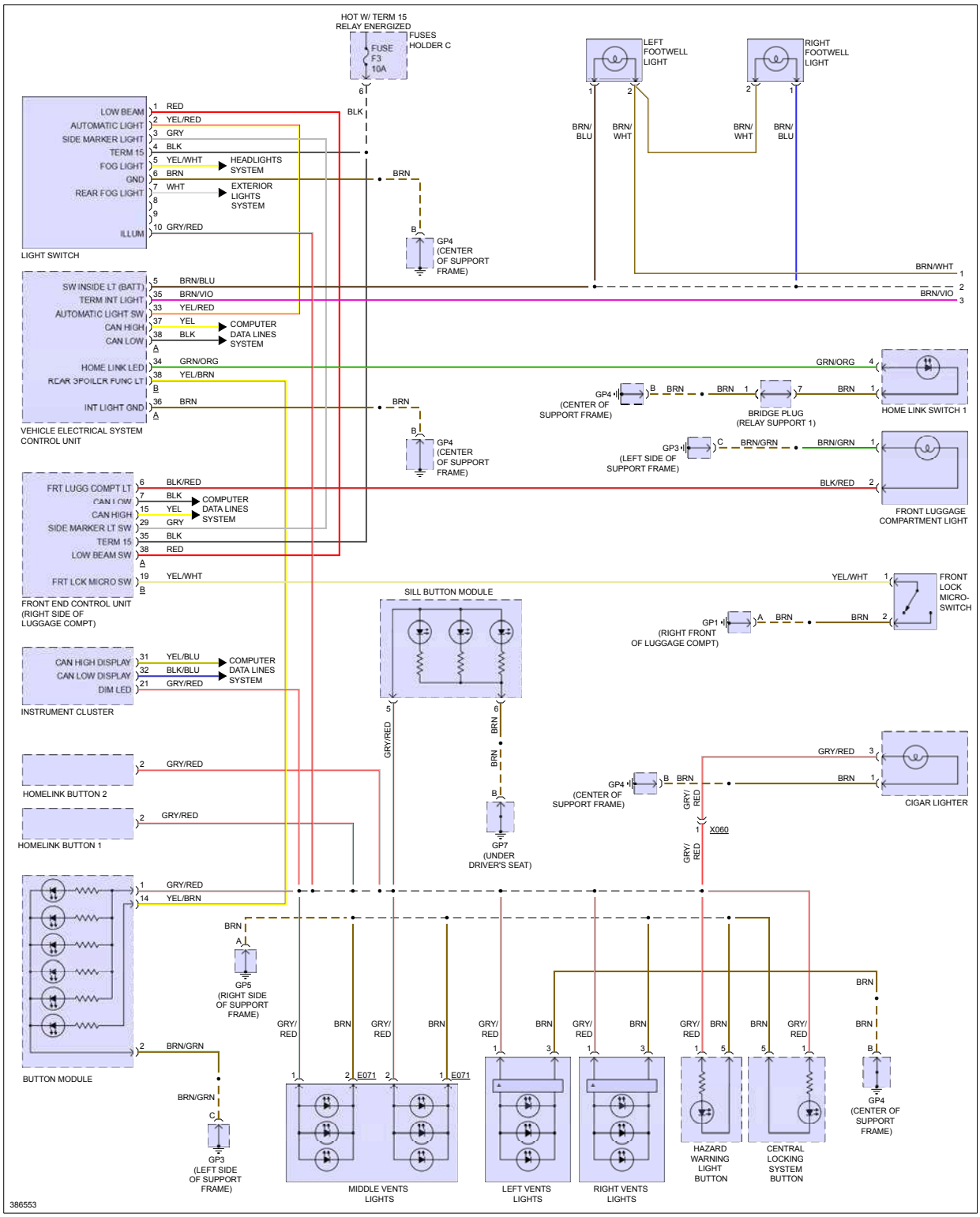

Fig 2: Interior Lights Circuit, W/ Turbo (2 of 2)

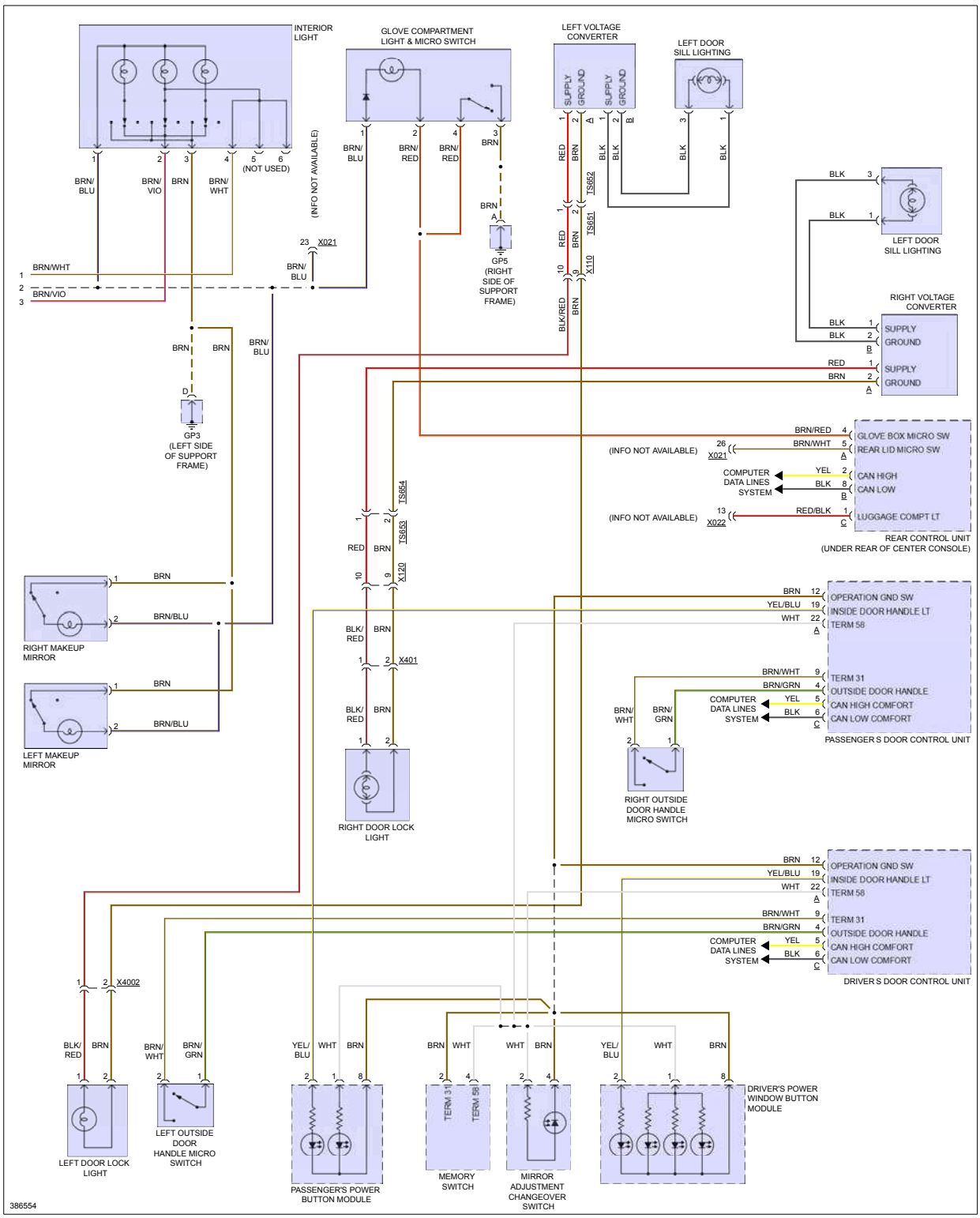

Fig 3: Interior Lights Circuit, W/O Turbo (1 of 3)

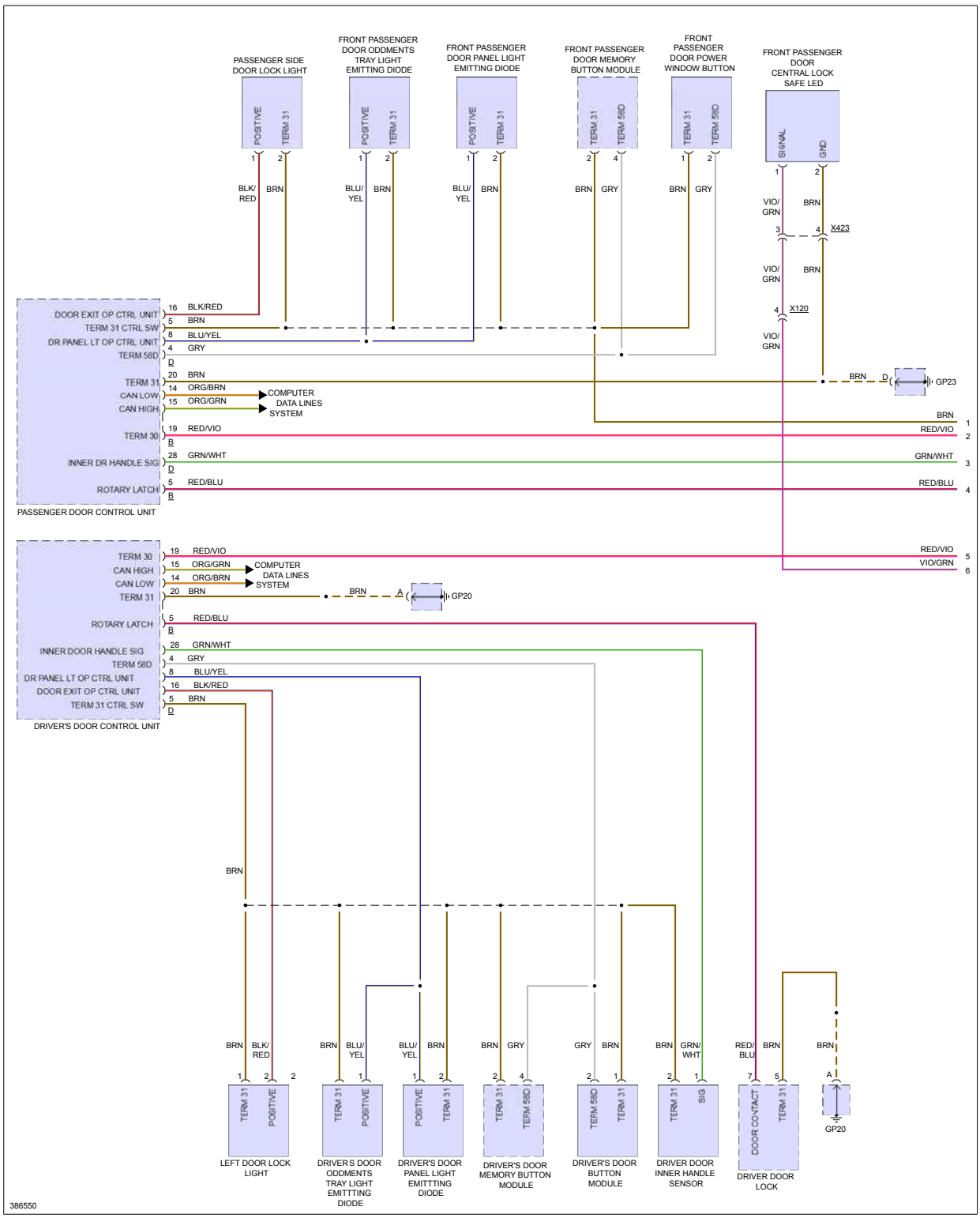

Fig 4: Interior Lights Circuit, W/O Turbo (2 of 3)

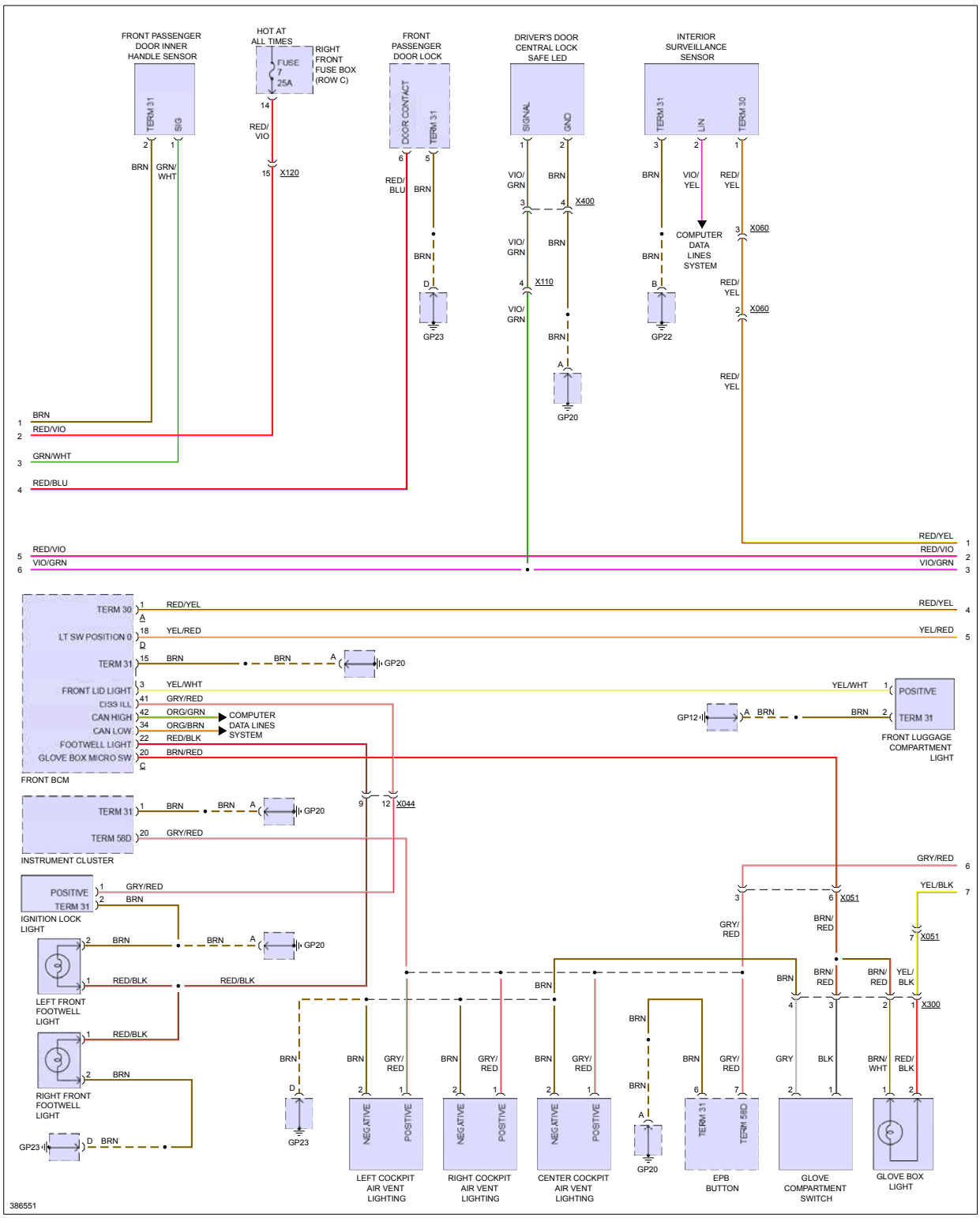

Fig 5: Interior Lights Circuit, W/O Turbo (3 of 3)

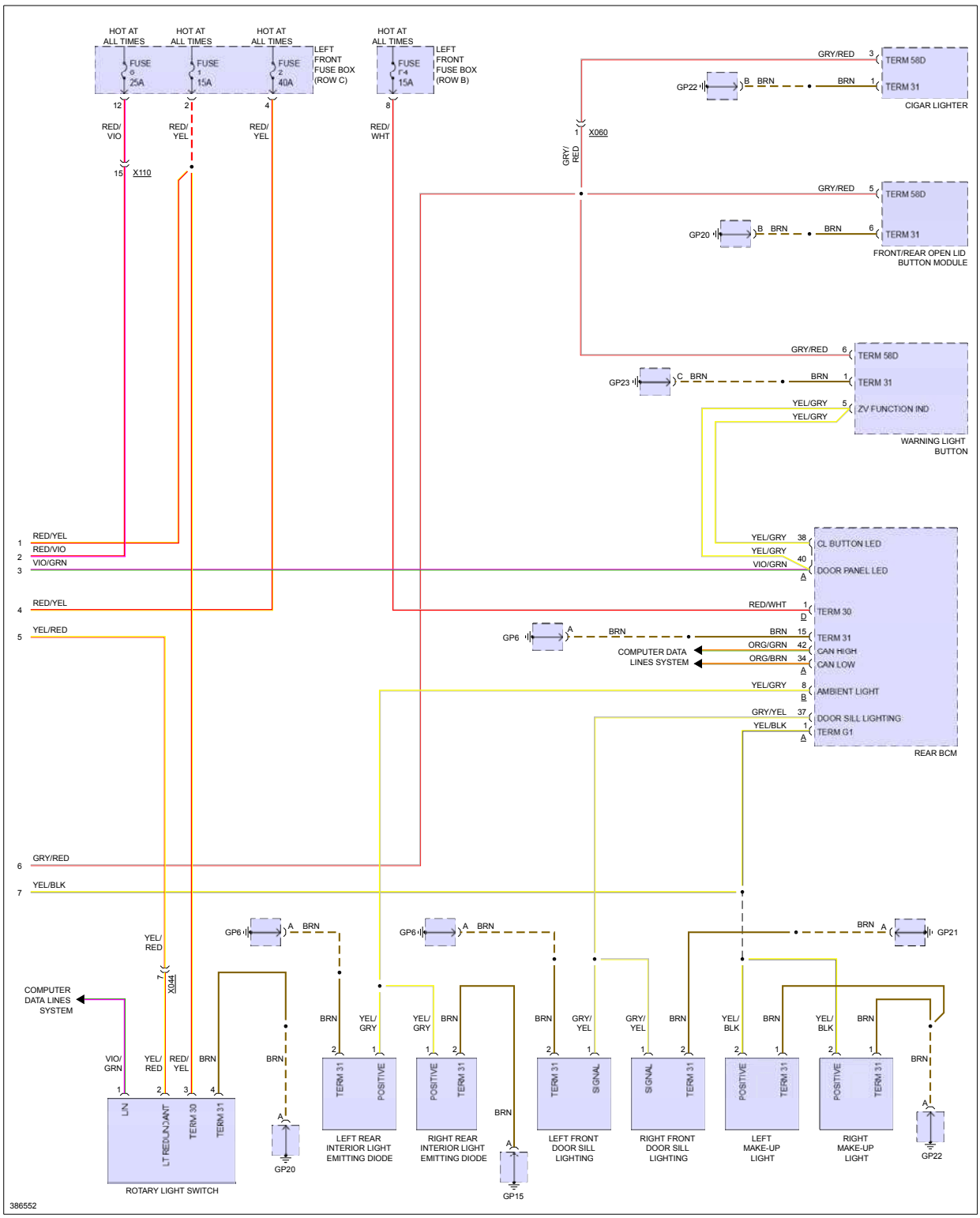

MEMORY SYSTEMS

Fig 1: Driver"s Memory Seat Circuit (1 of 2)

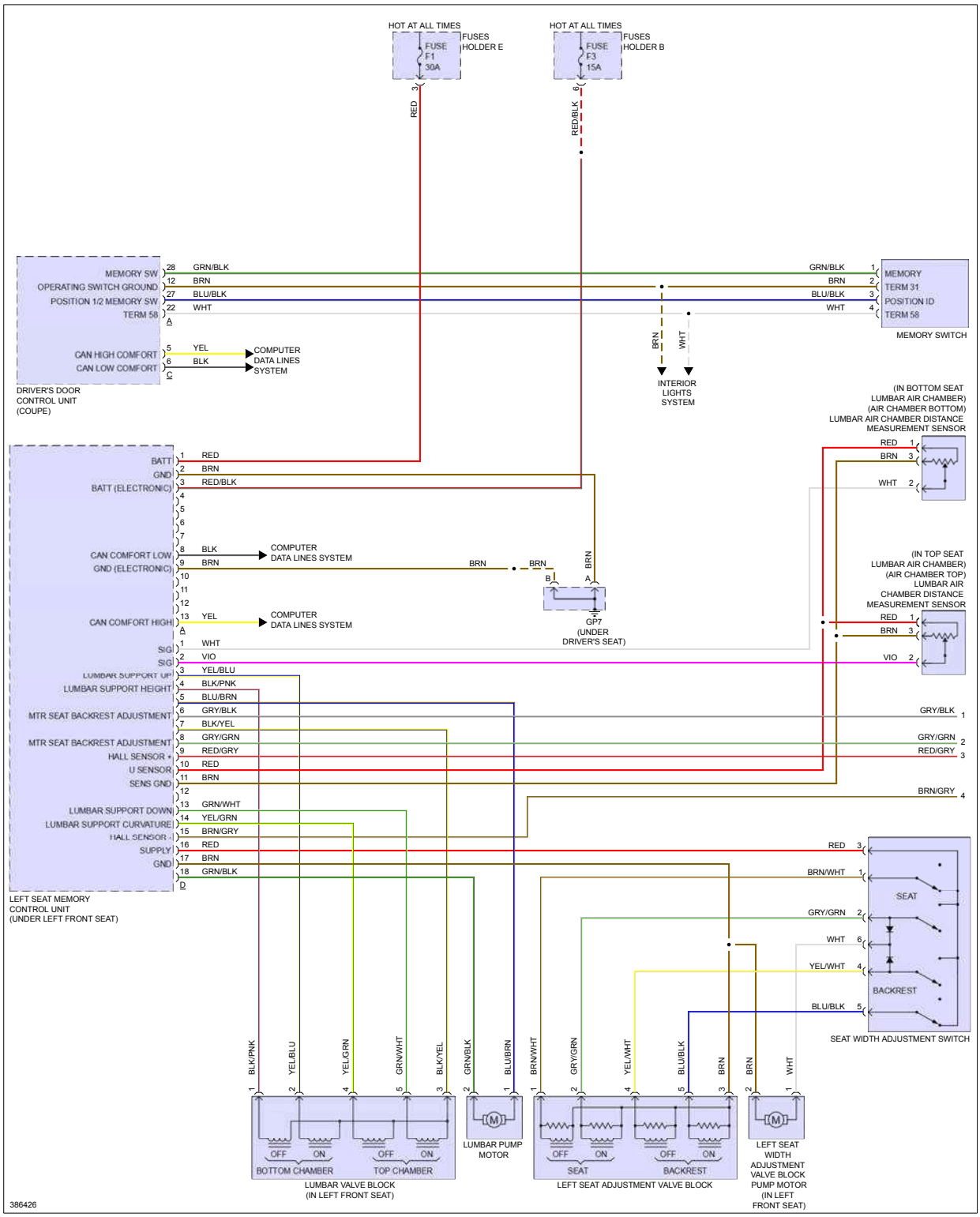

Fig 2: Driver"s Memory Seat Circuit (2 of 2)

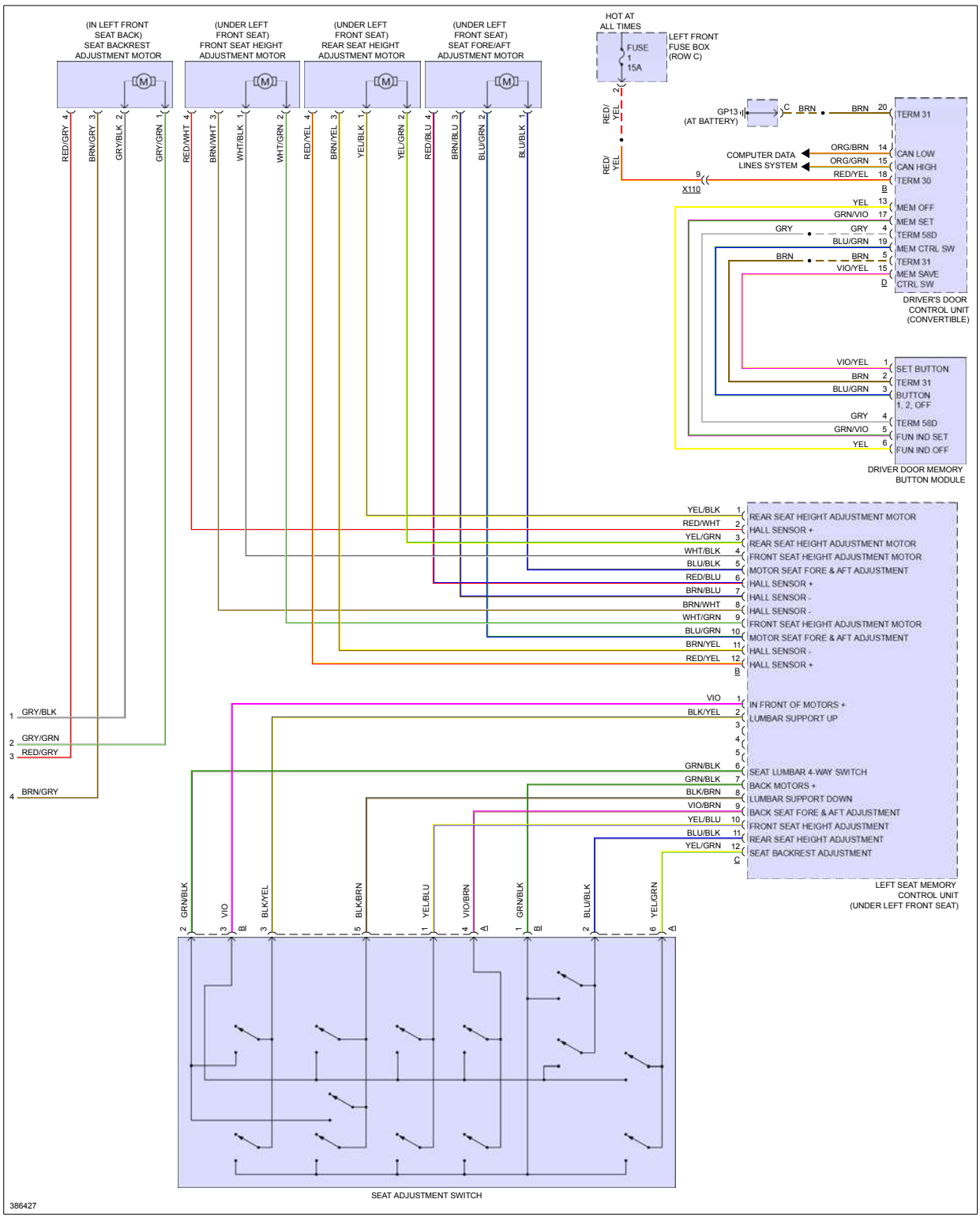

Fig 3: Memory Mirrors Circuit, W/ Turbo

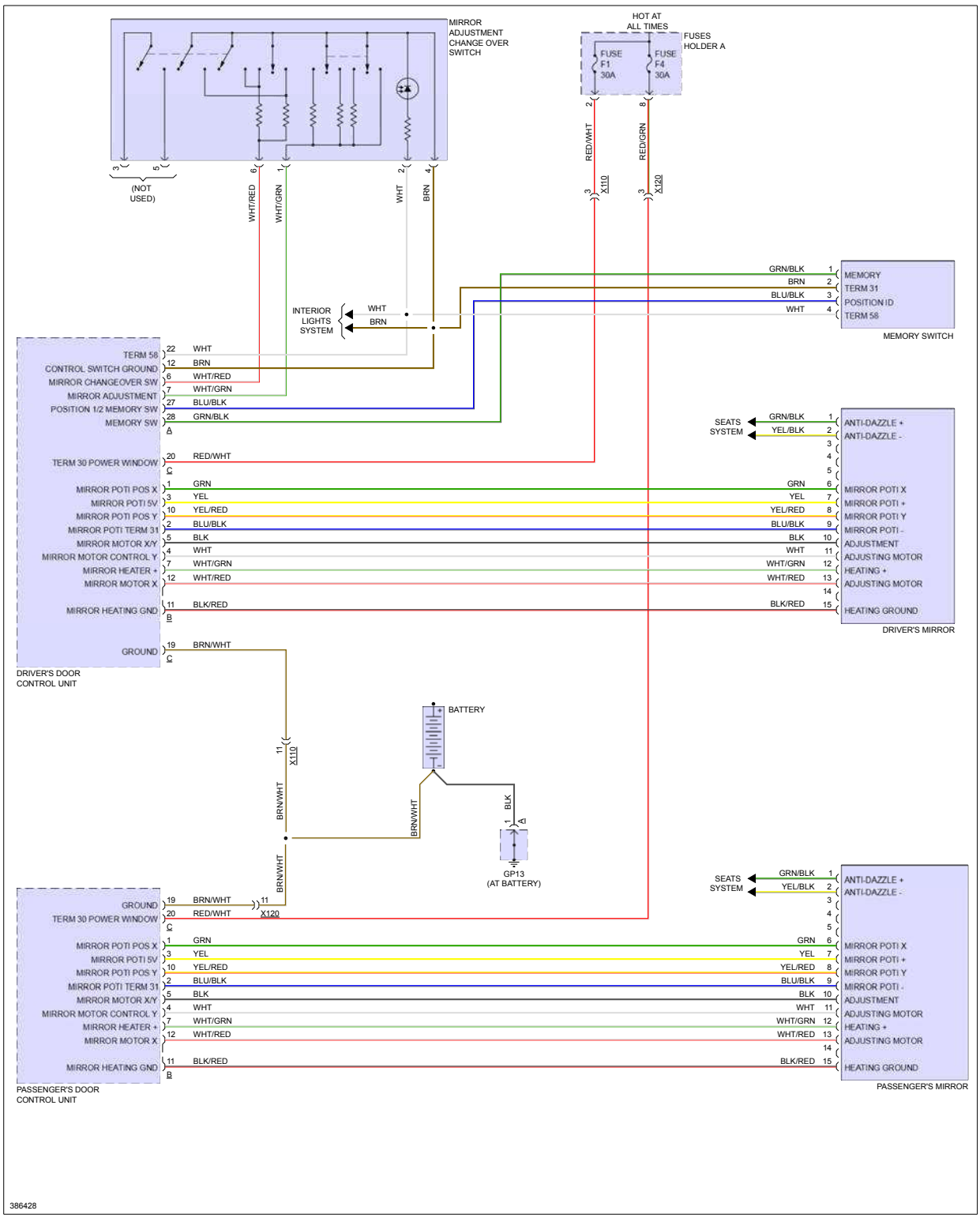

Fig 4: Memory Mirrors Circuit, W/O Turbo

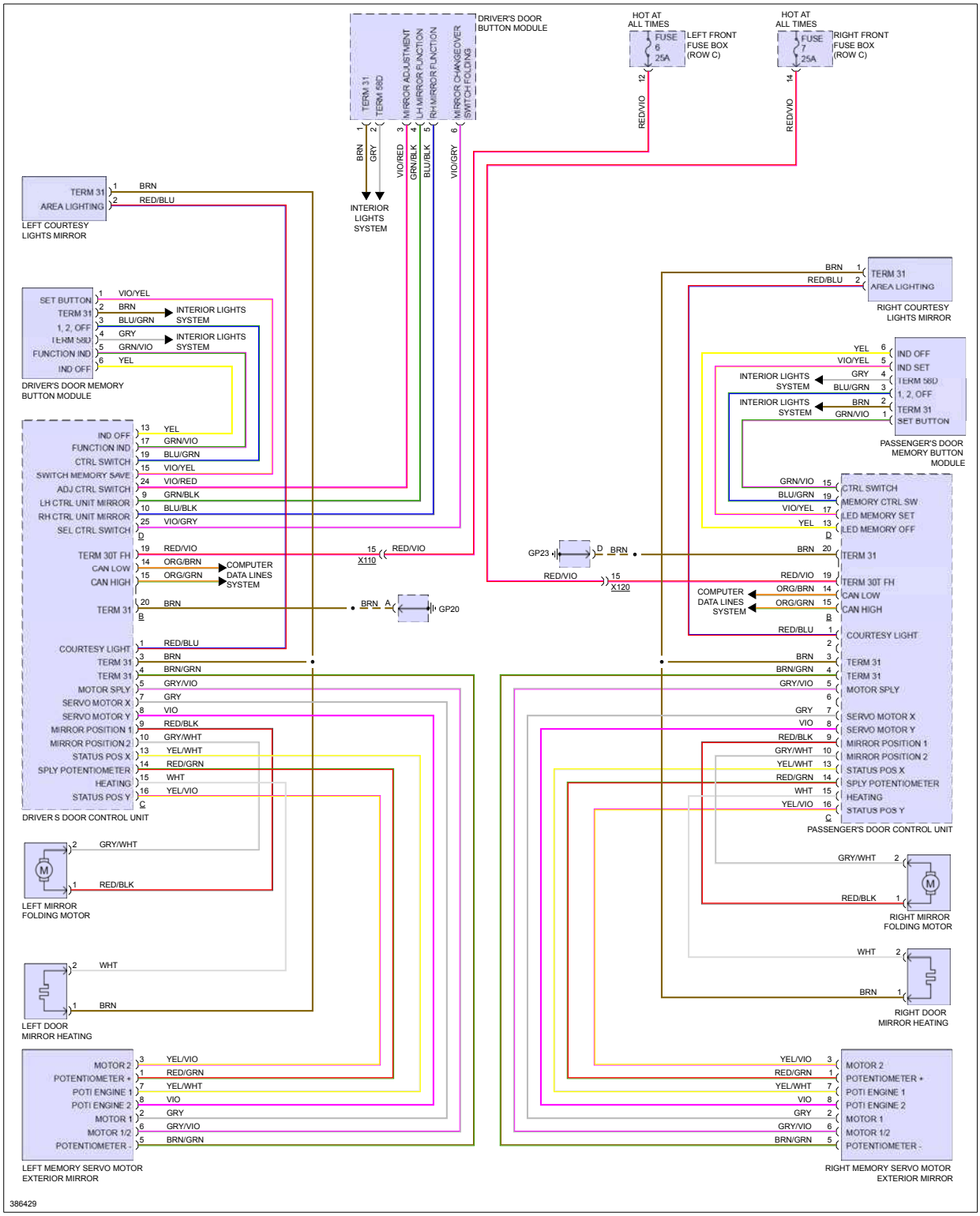

Fig 5: Passenger"s Memory Seat Circuit (1 of 2)

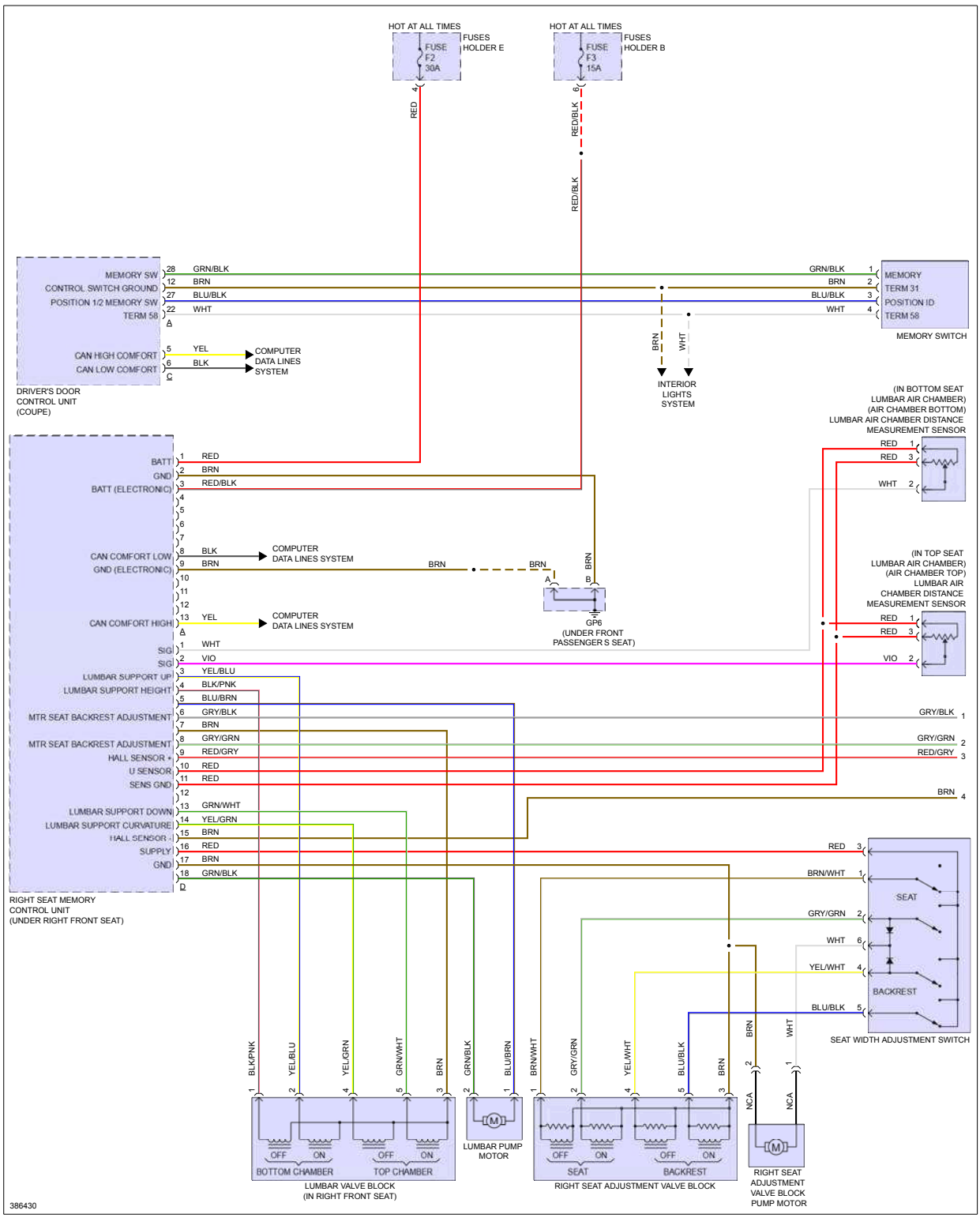

Fig 6: Passenger"s Memory Seat Circuit (2 of 2)

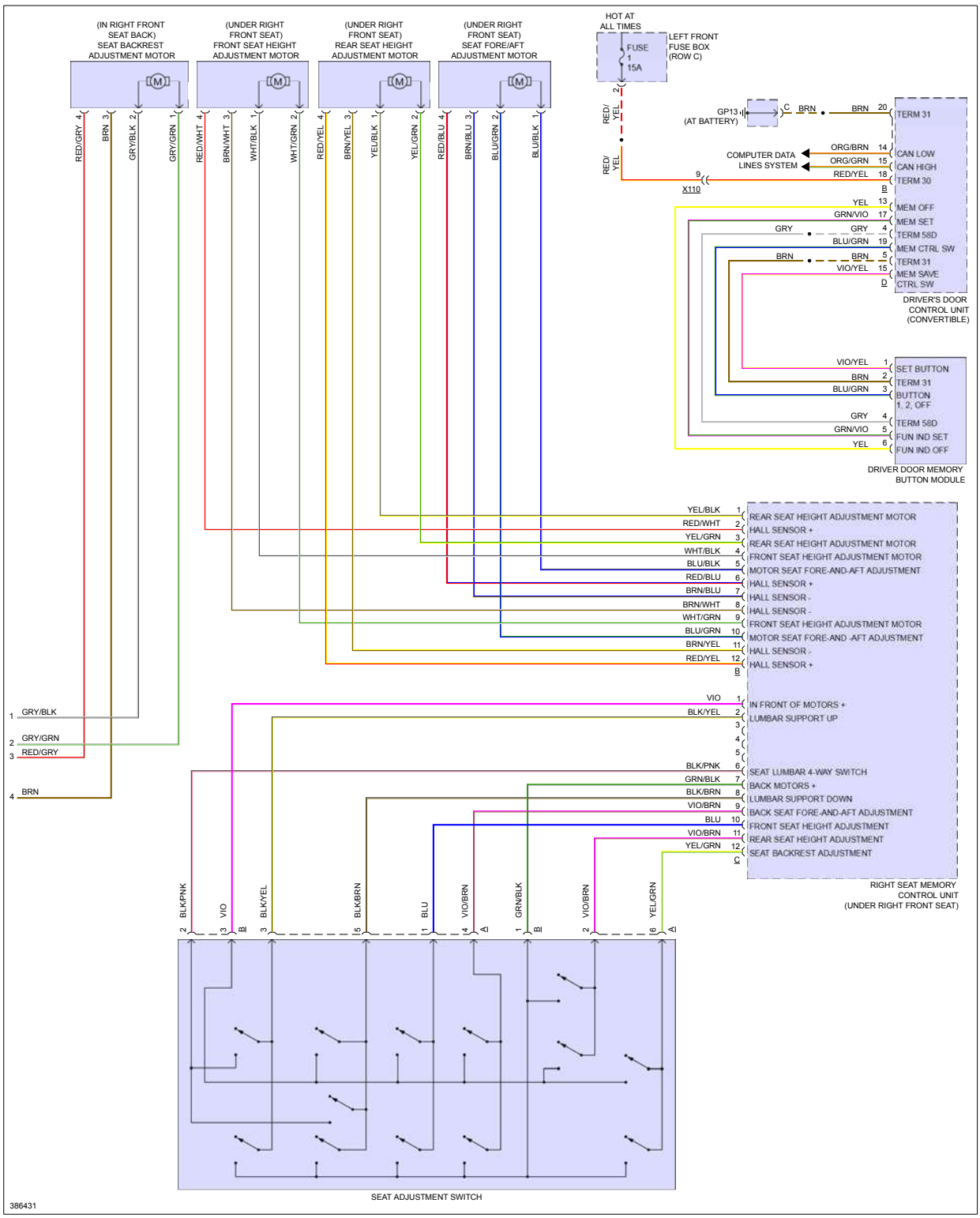

Fig 7: Steering Column Memory Circuit

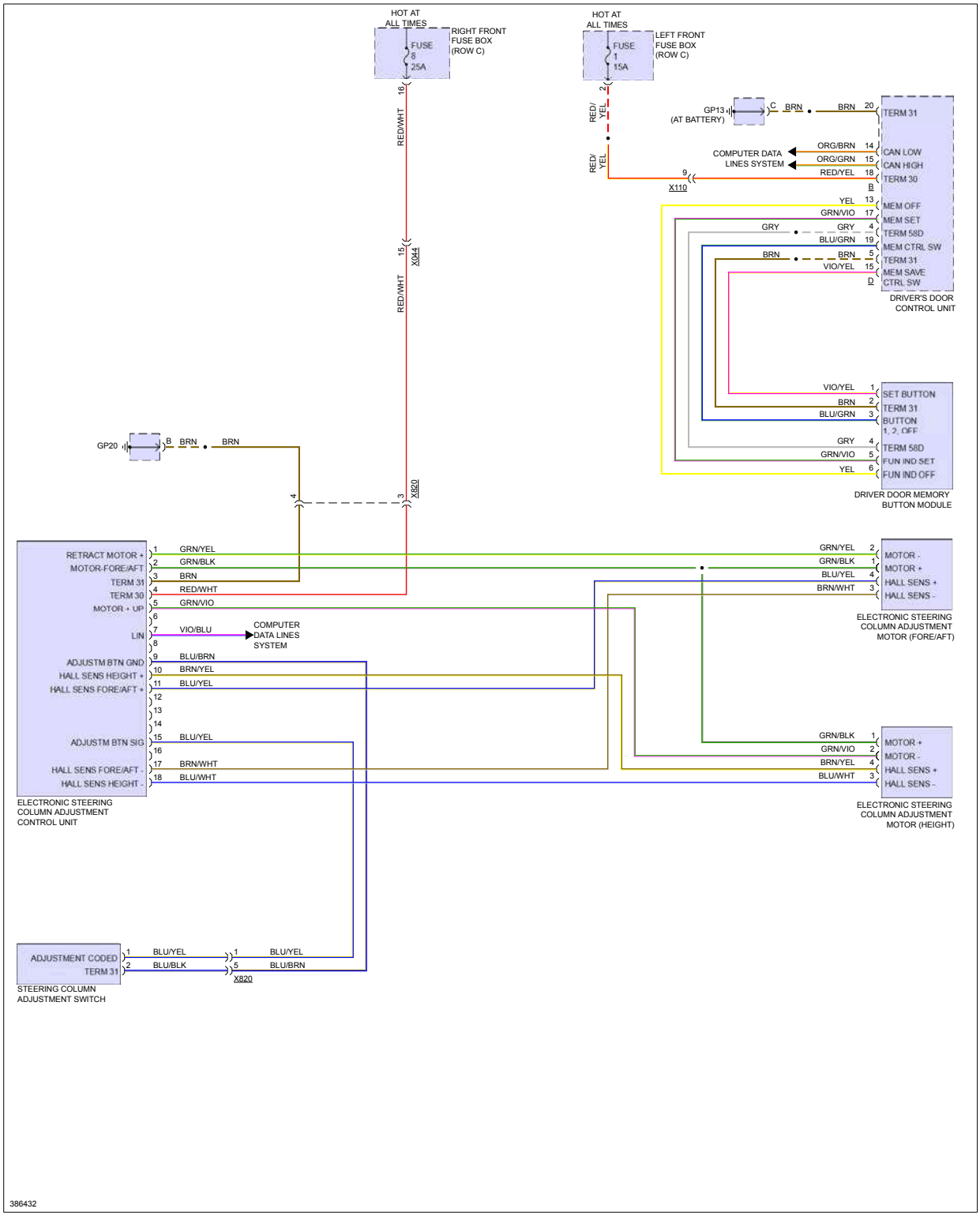

NAVIGATION

Fig 1: Navigation Circuit, W/ Burmester (1 of 4)

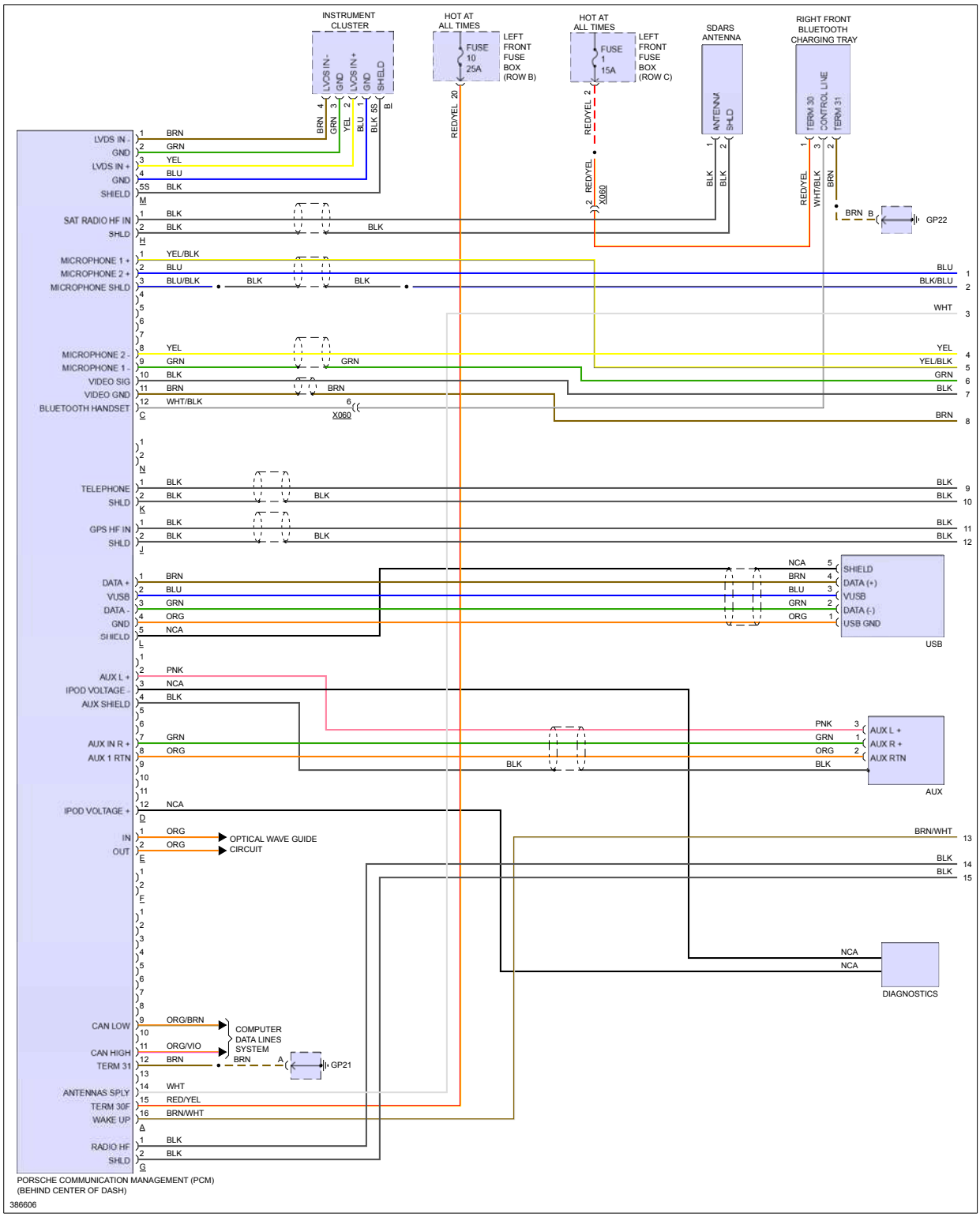

Fig 2: Navigation Circuit, W/ Burmester (2 of 4)

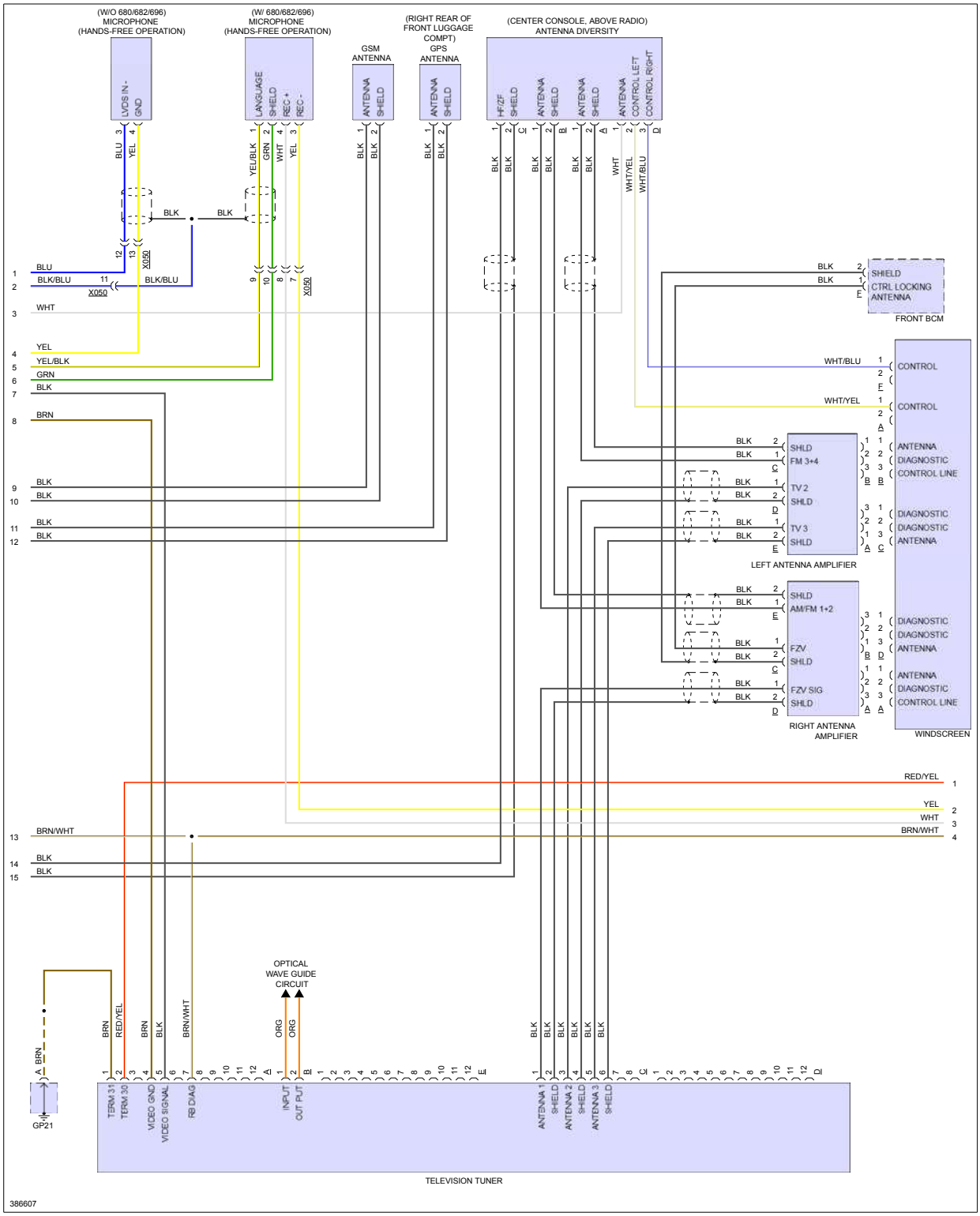

Fig 3: Navigation Circuit, W/ Burmester (3 of 4)

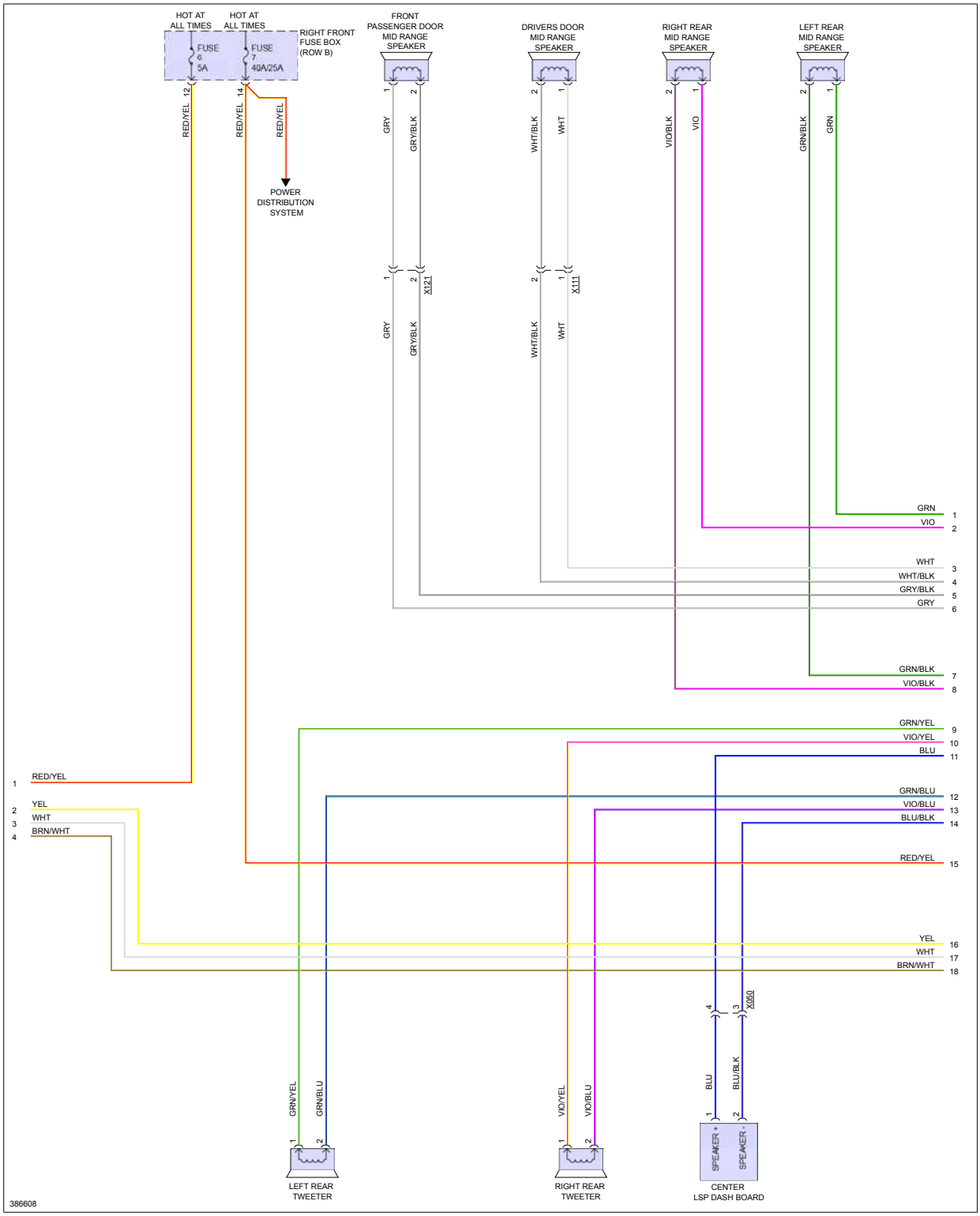

Fig 4: Navigation Circuit, W/ Burmester (4 of 4)

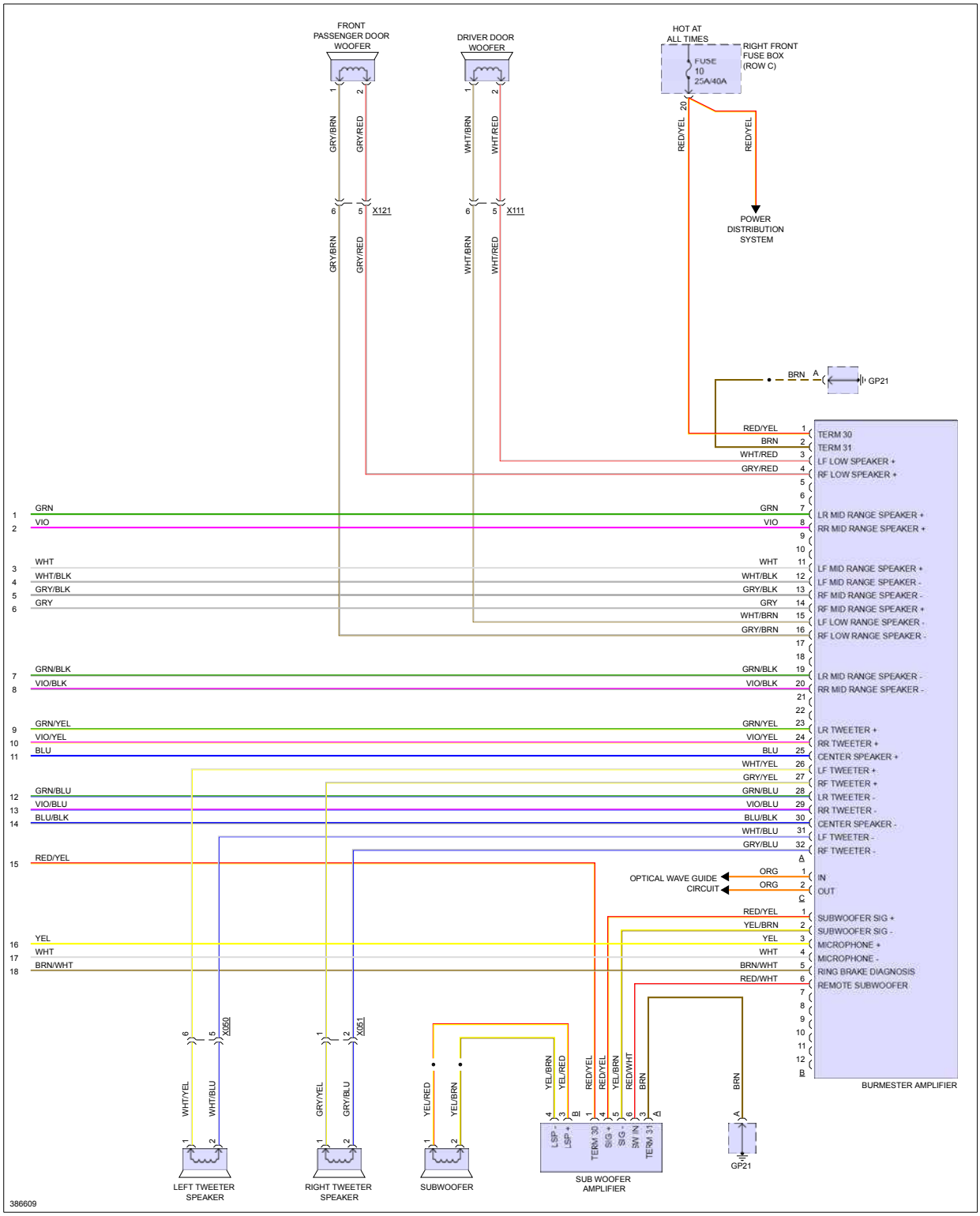

Fig 5: Navigation Circuit, W/ Turbo Convertible W/ Bose

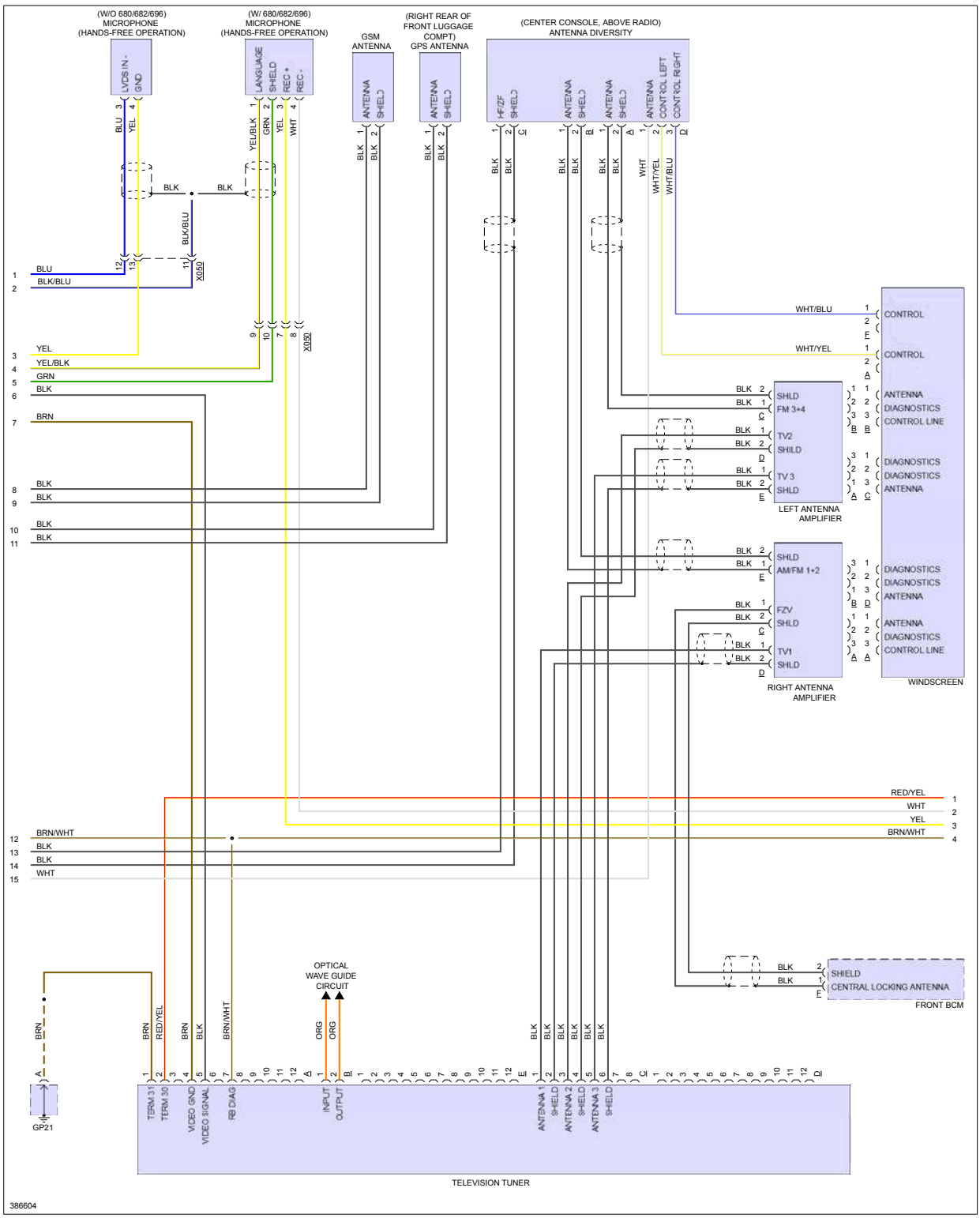

Fig 6: Navigation Circuit, W/ Turbo W/ Bose (1 of 4)

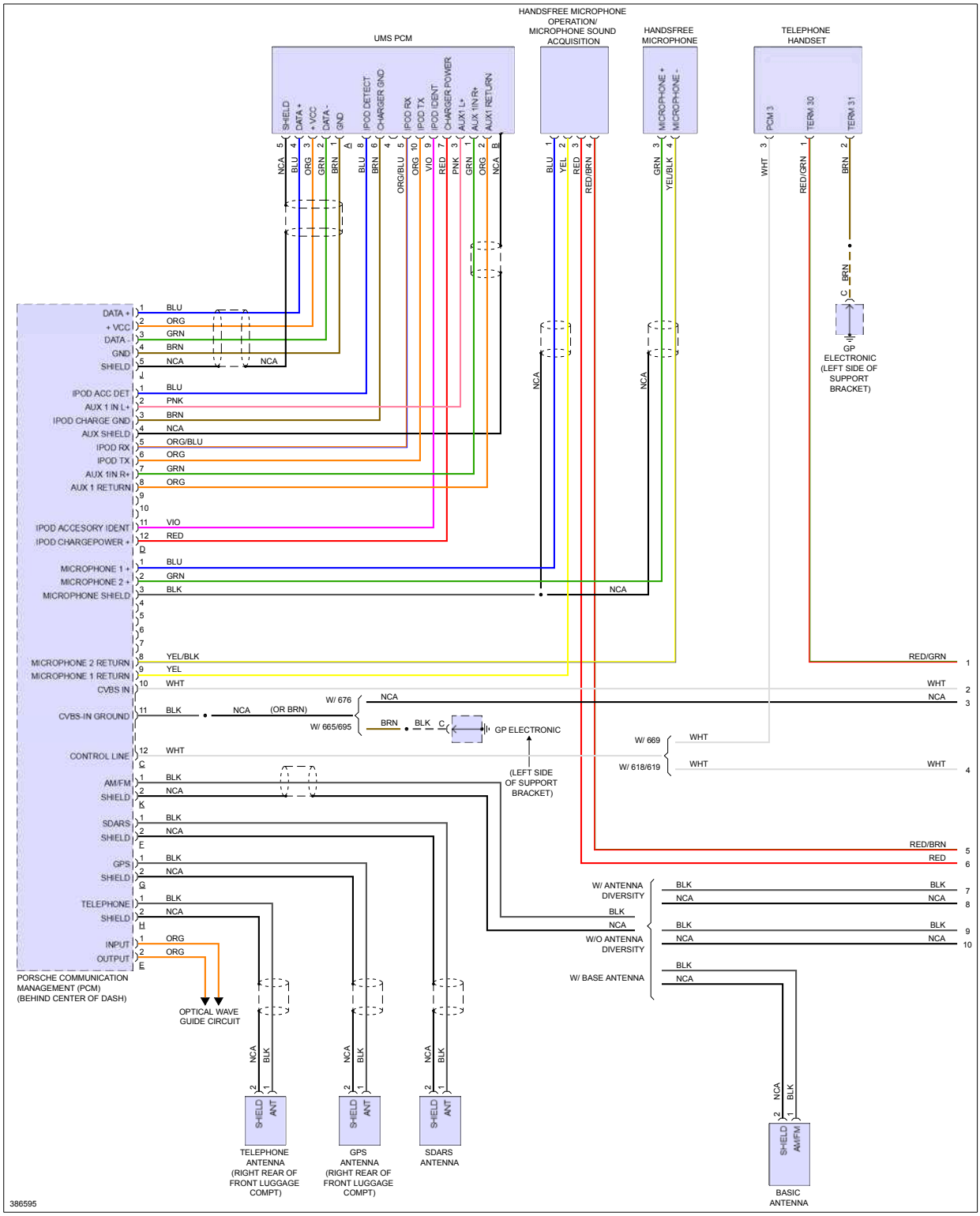

Fig 7: Navigation Circuit, W/ Turbo W/ Bose (2 of 4)

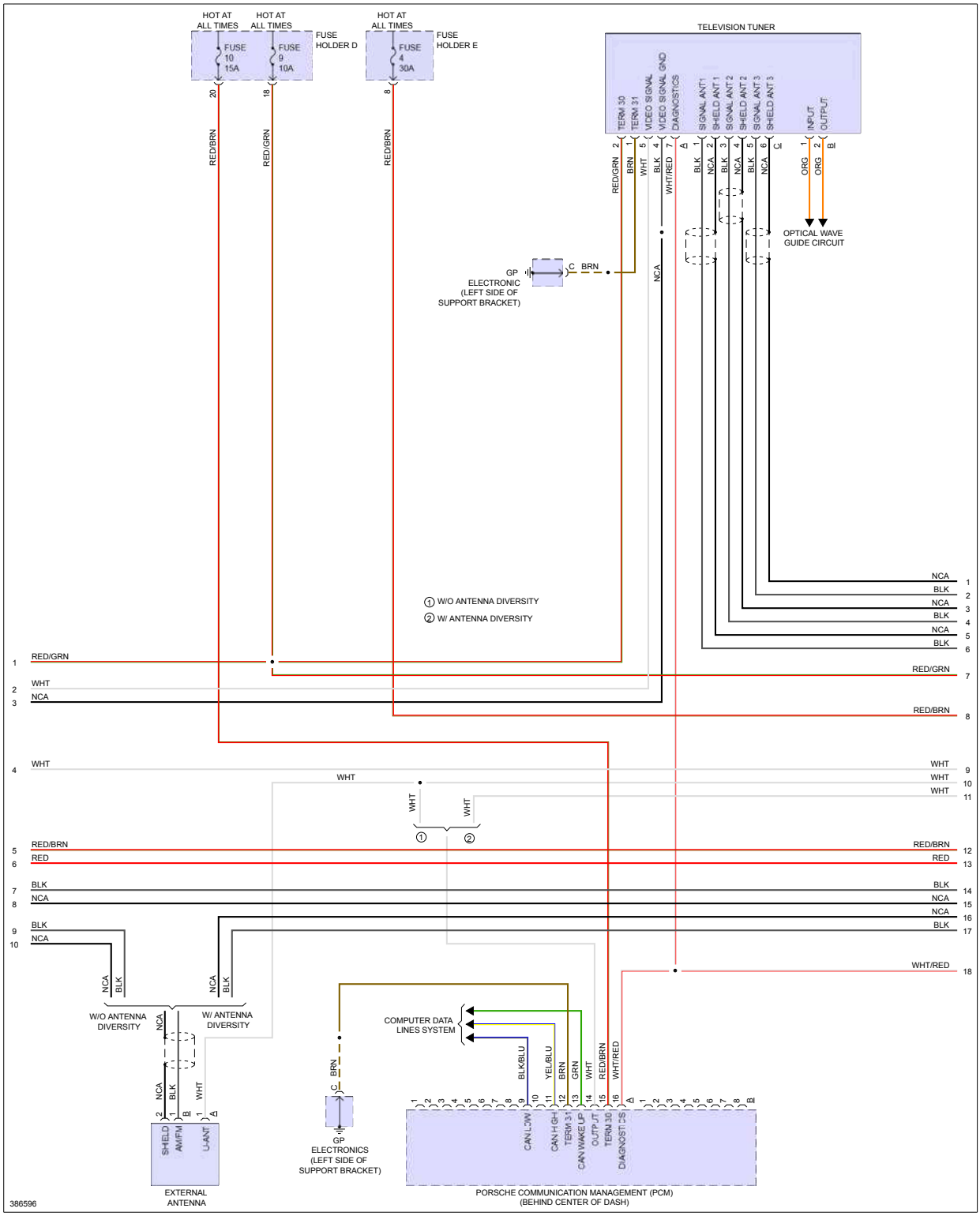

Fig 8: Navigation Circuit, W/ Turbo W/ Bose (3 of 4)

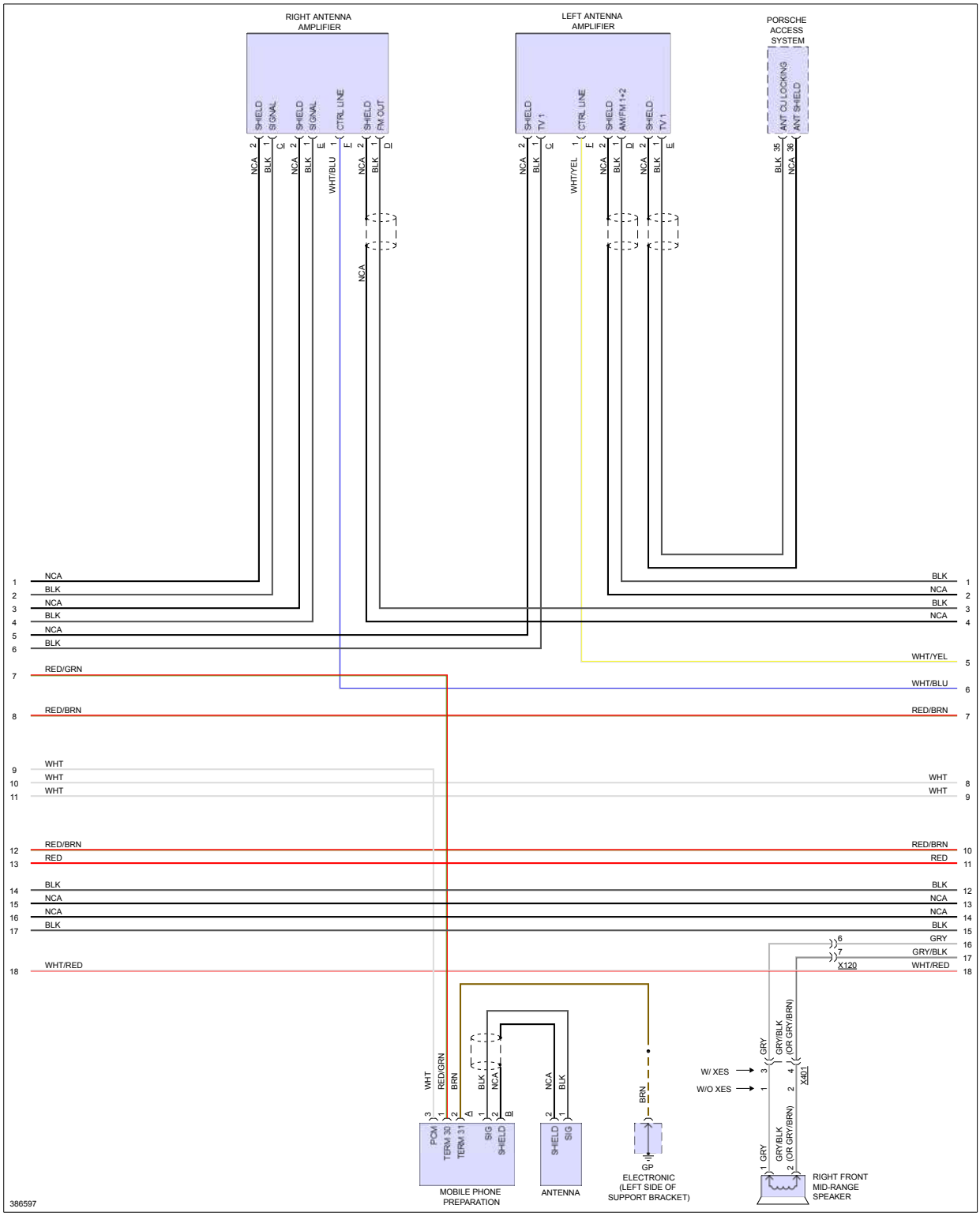

Fig 9: Navigation Circuit, W/ Turbo W/ Bose (4 of 4)

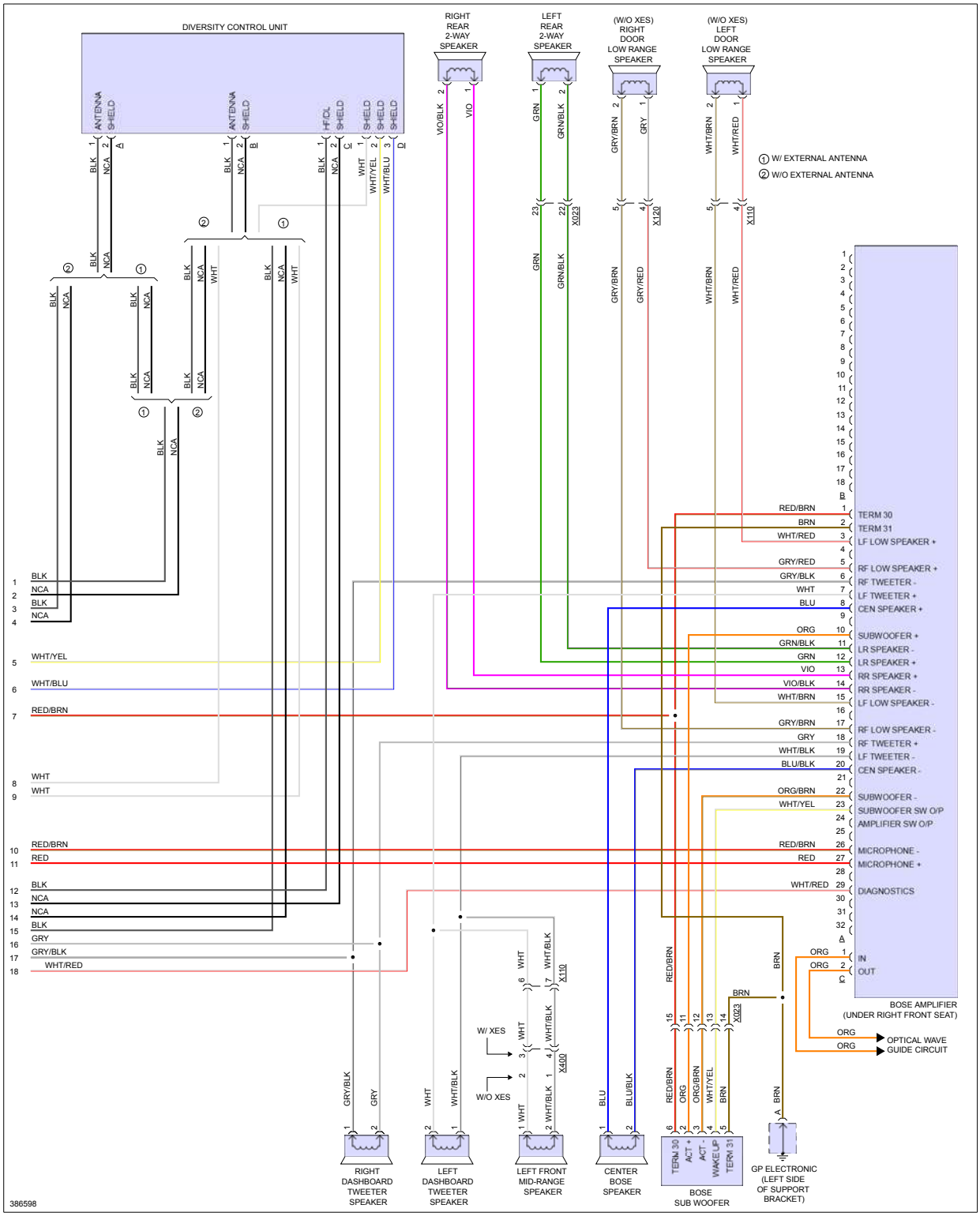

Fig 10: Navigation Circuit, W/ Turbo W/O Bose (1 of 4)

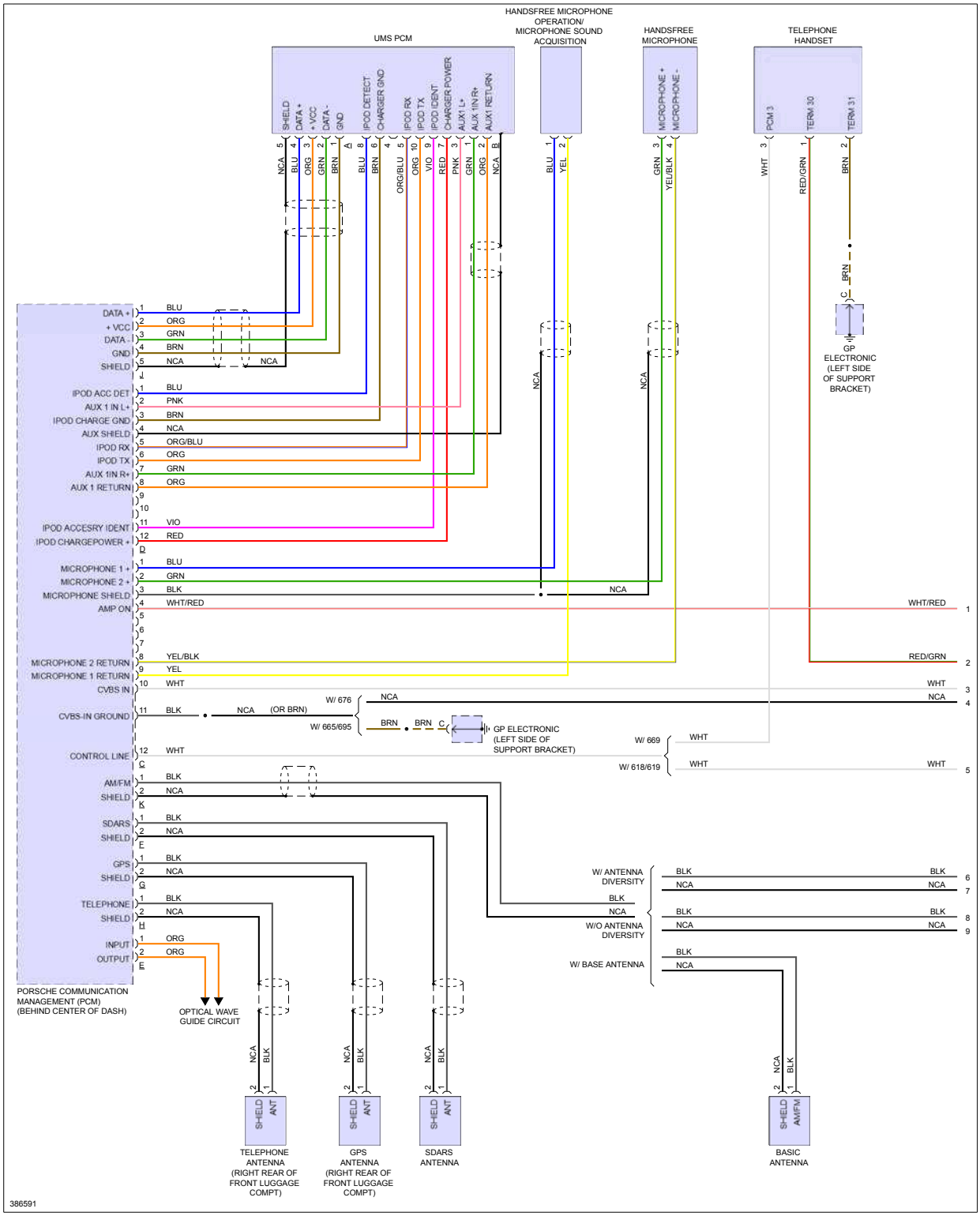

Fig 11: Navigation Circuit, W/ Turbo W/O Bose (2 of 4)

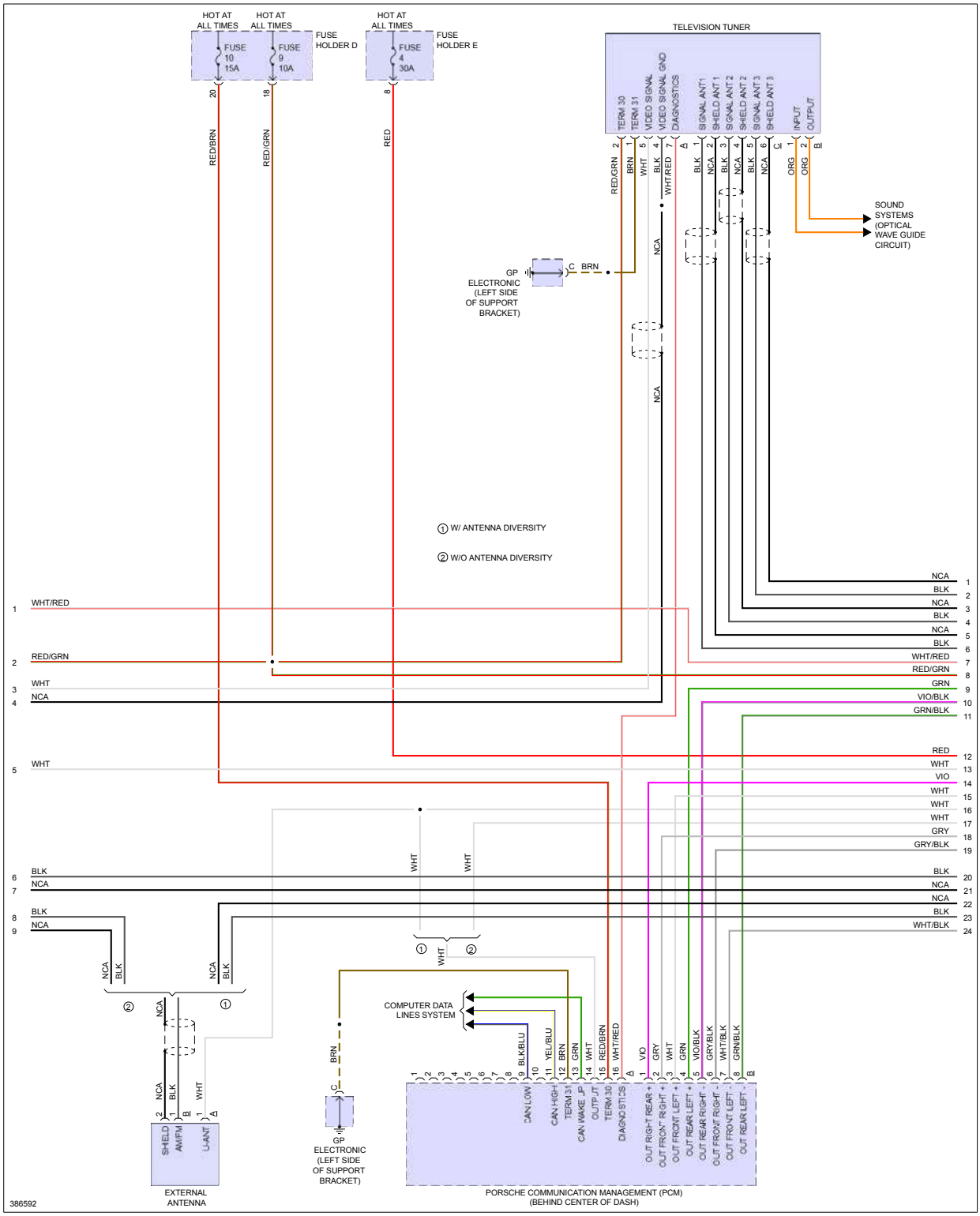

Fig 12: Navigation Circuit, W/ Turbo W/O Bose (3 of 4)

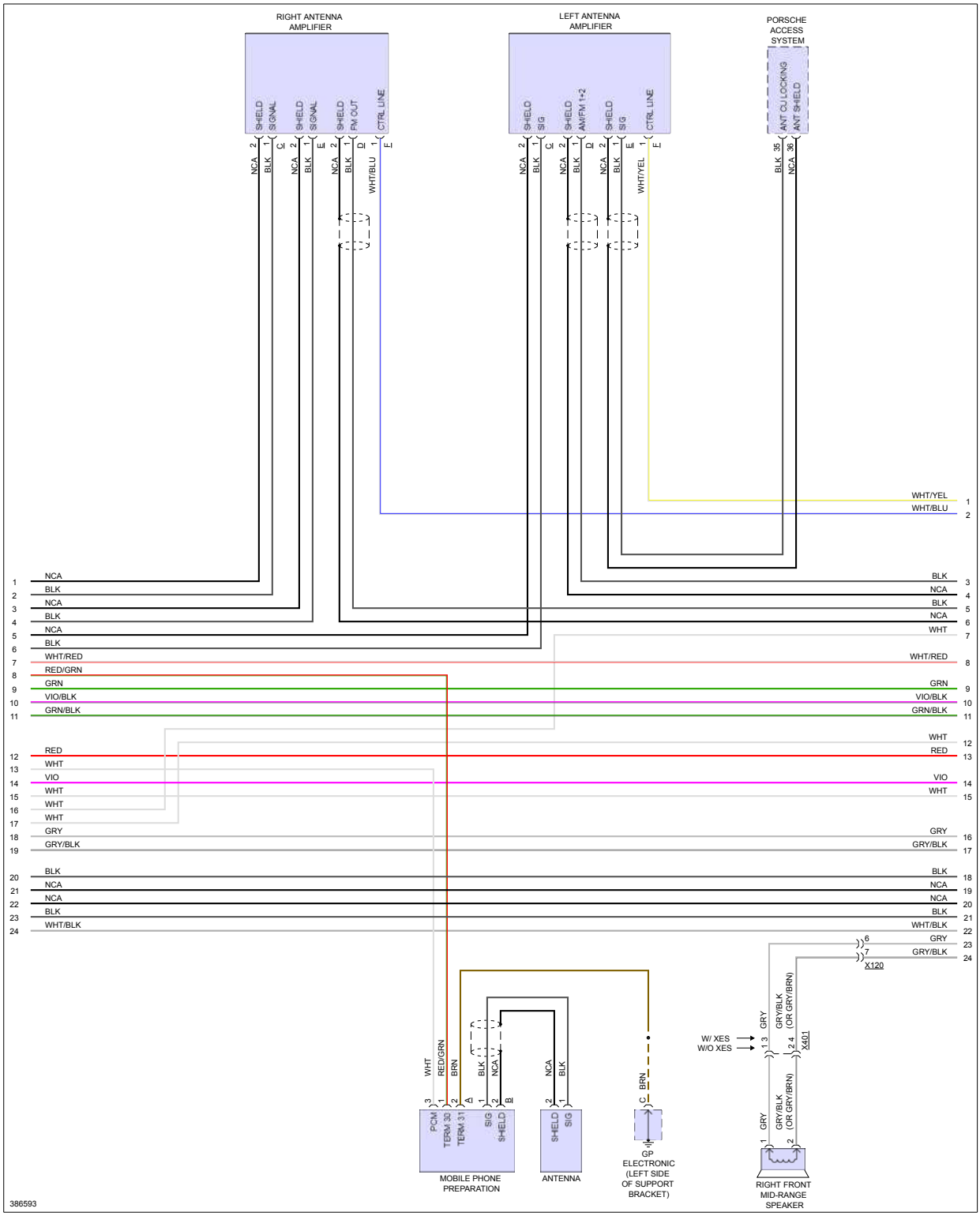

Fig 13: Navigation Circuit, W/ Turbo W/O Bose (4 of 4)

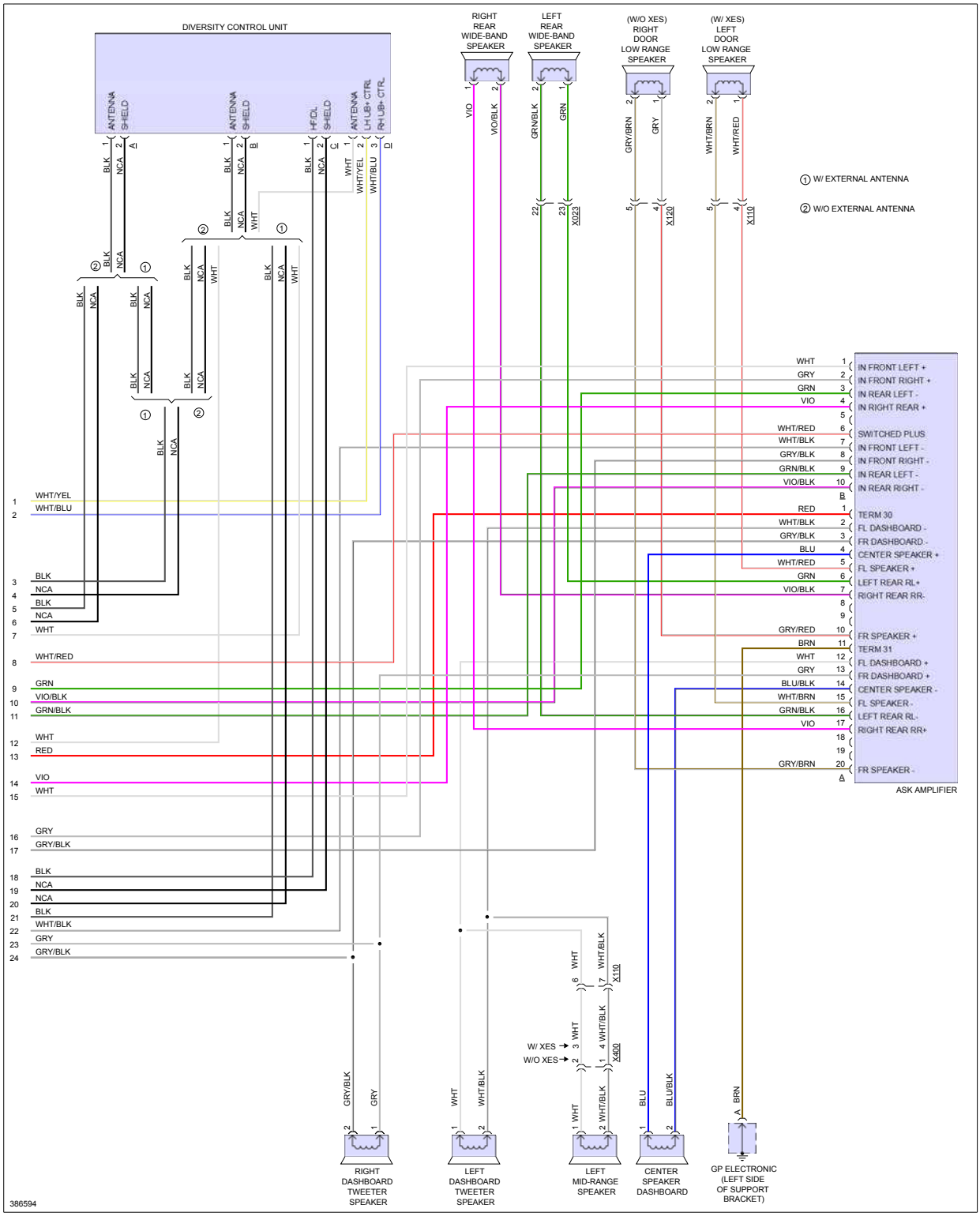

Fig 14: Navigation Circuit, W/O Turbo W/ Bose (1 of 2)

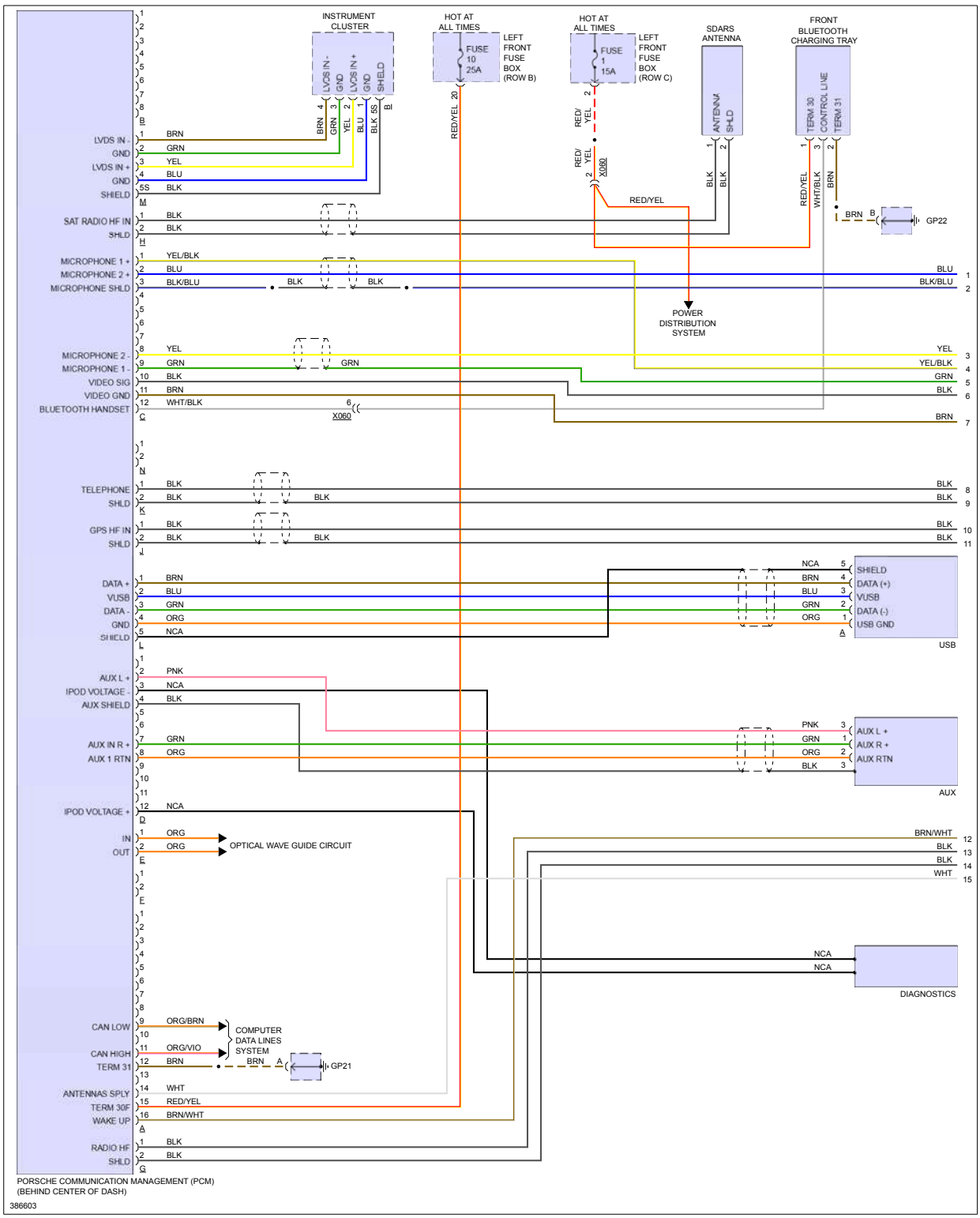

Fig 15: Navigation Circuit, W/O Turbo W/ Bose (2 of 2)

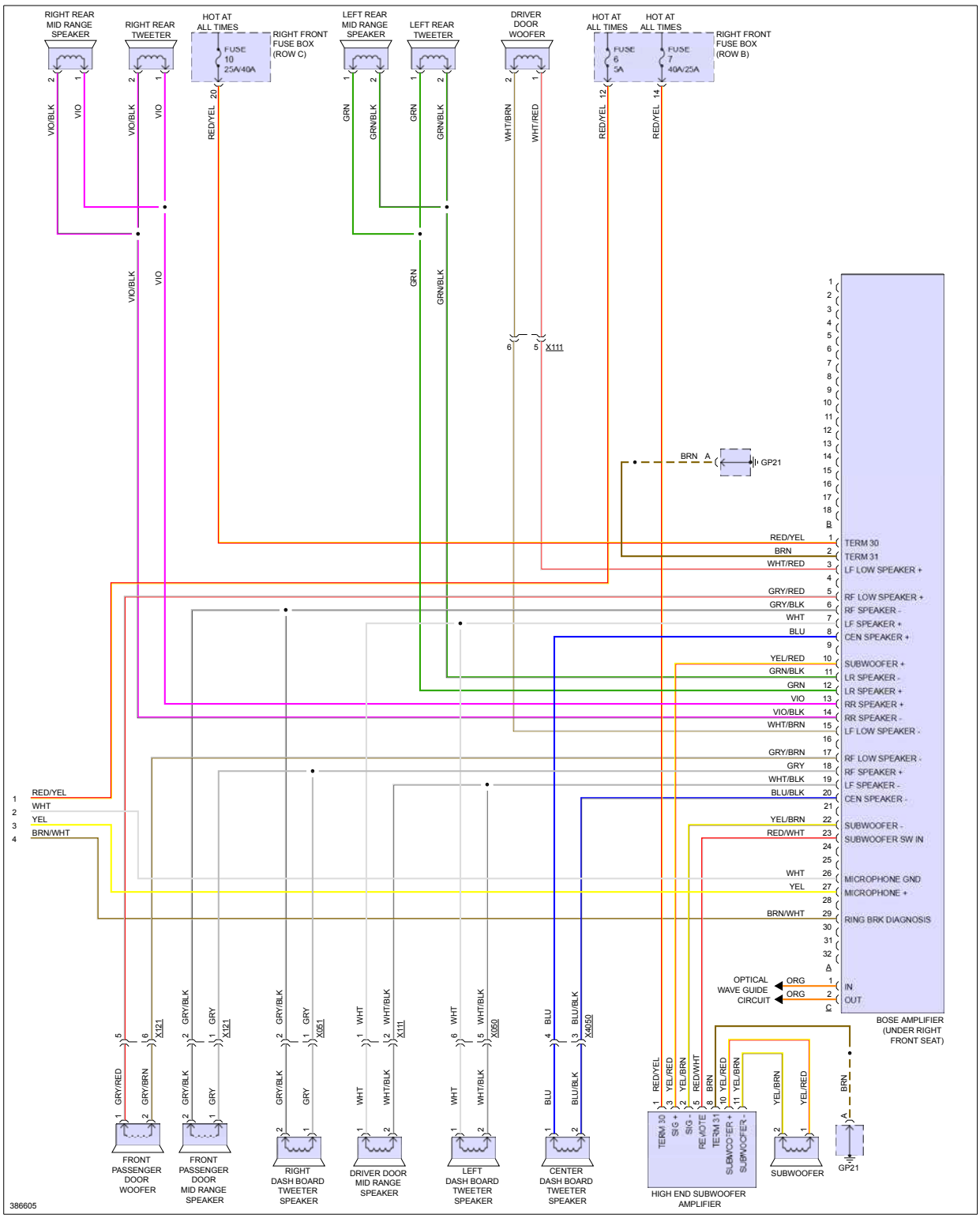

Fig 16: Navigation Circuit, W/O Turbo W/O Bose (1 of 3)

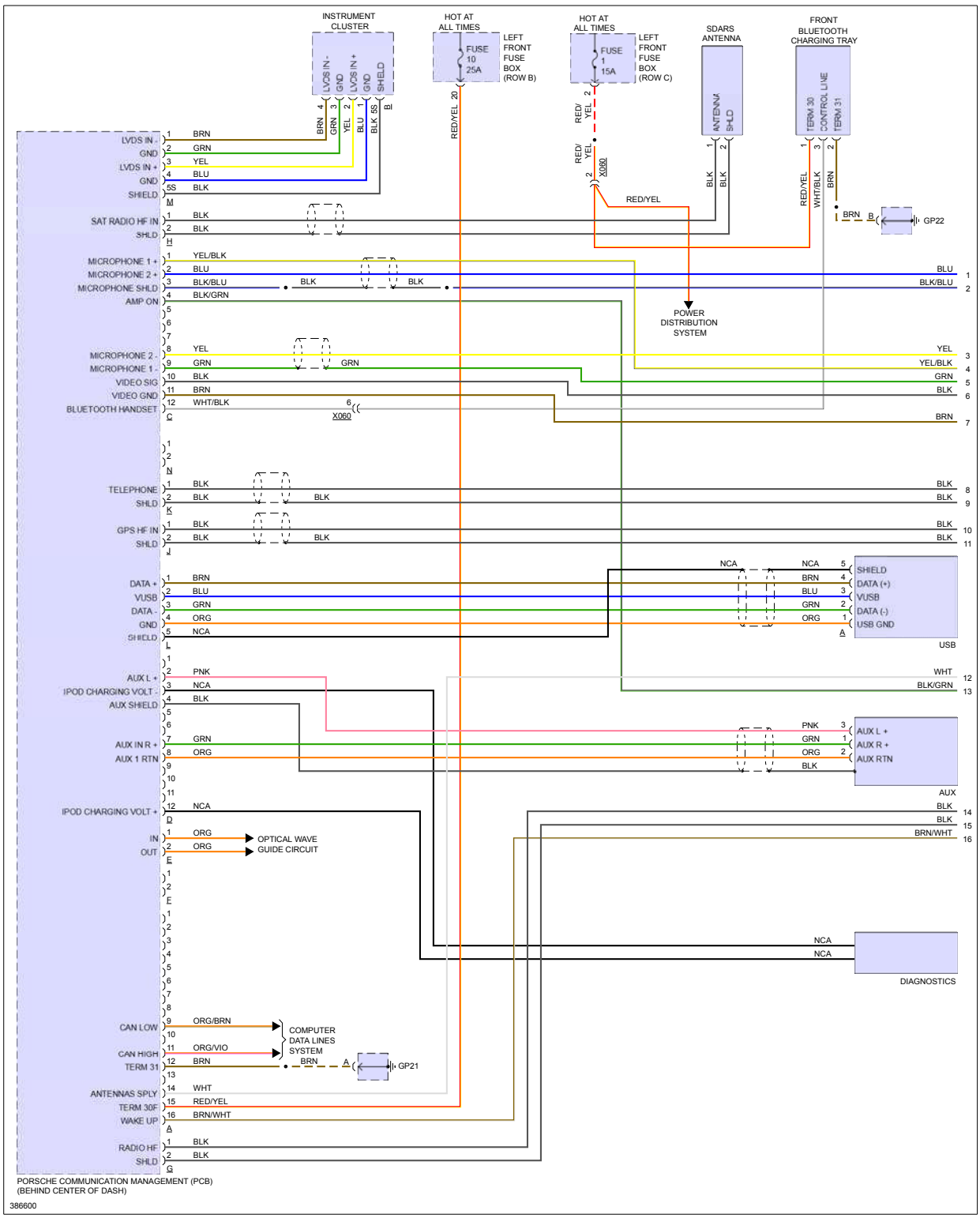

Fig 17: Navigation Circuit, W/O Turbo W/O Bose (2 of 3)

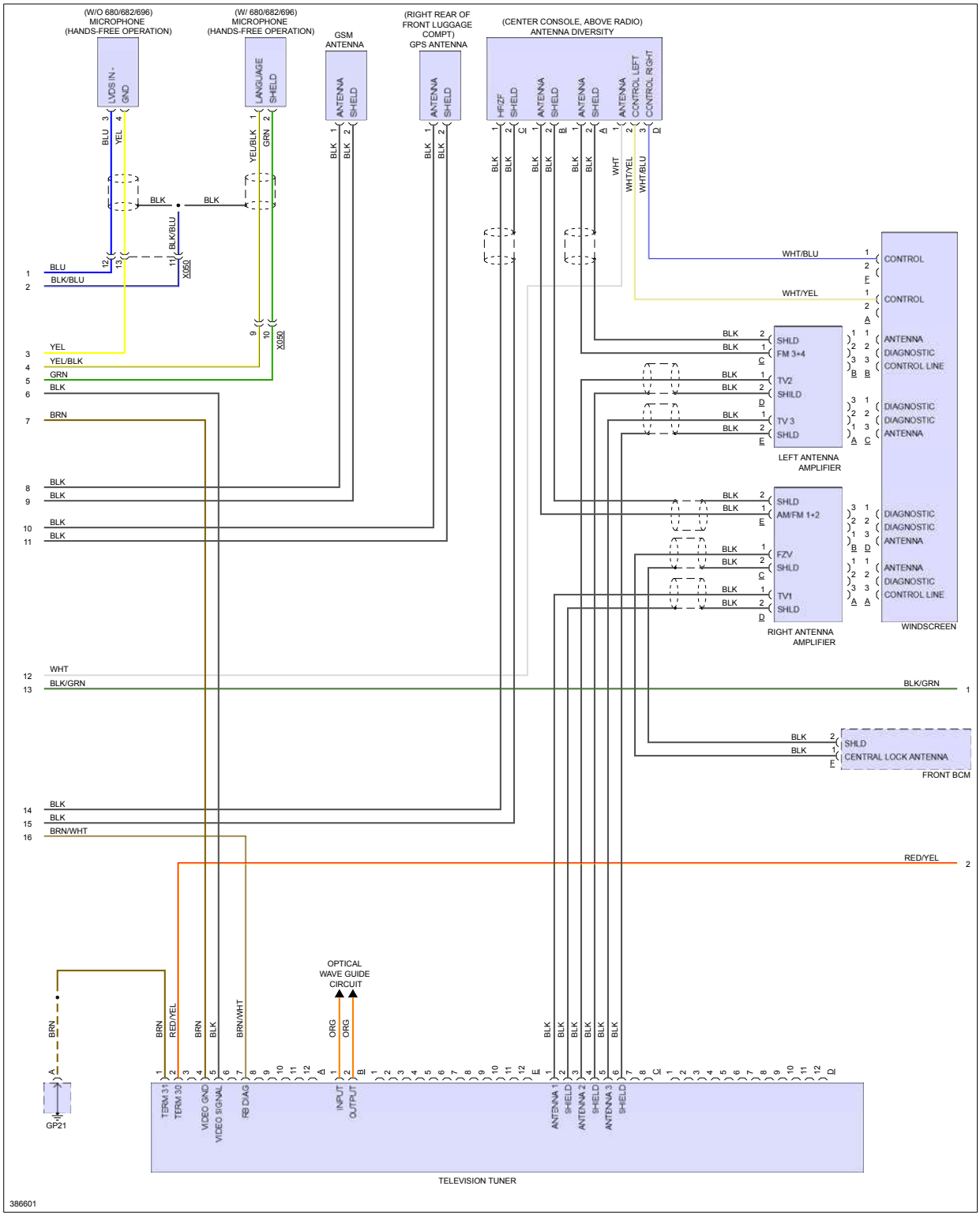

Fig 18: Navigation Circuit, W/O Turbo W/O Bose (3 of 3)

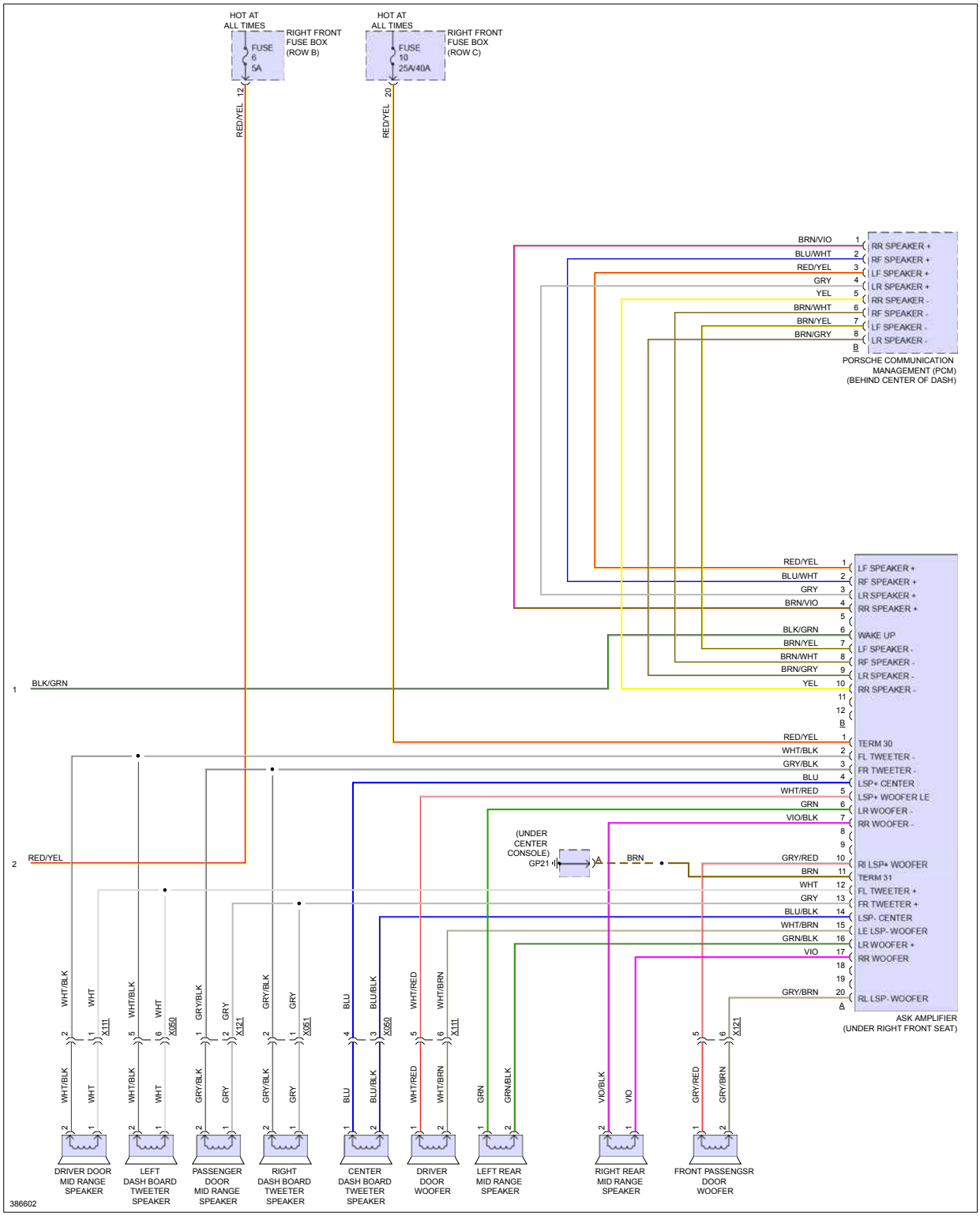

Fig 19: Parking Assistant Circuit, W/ Turbo

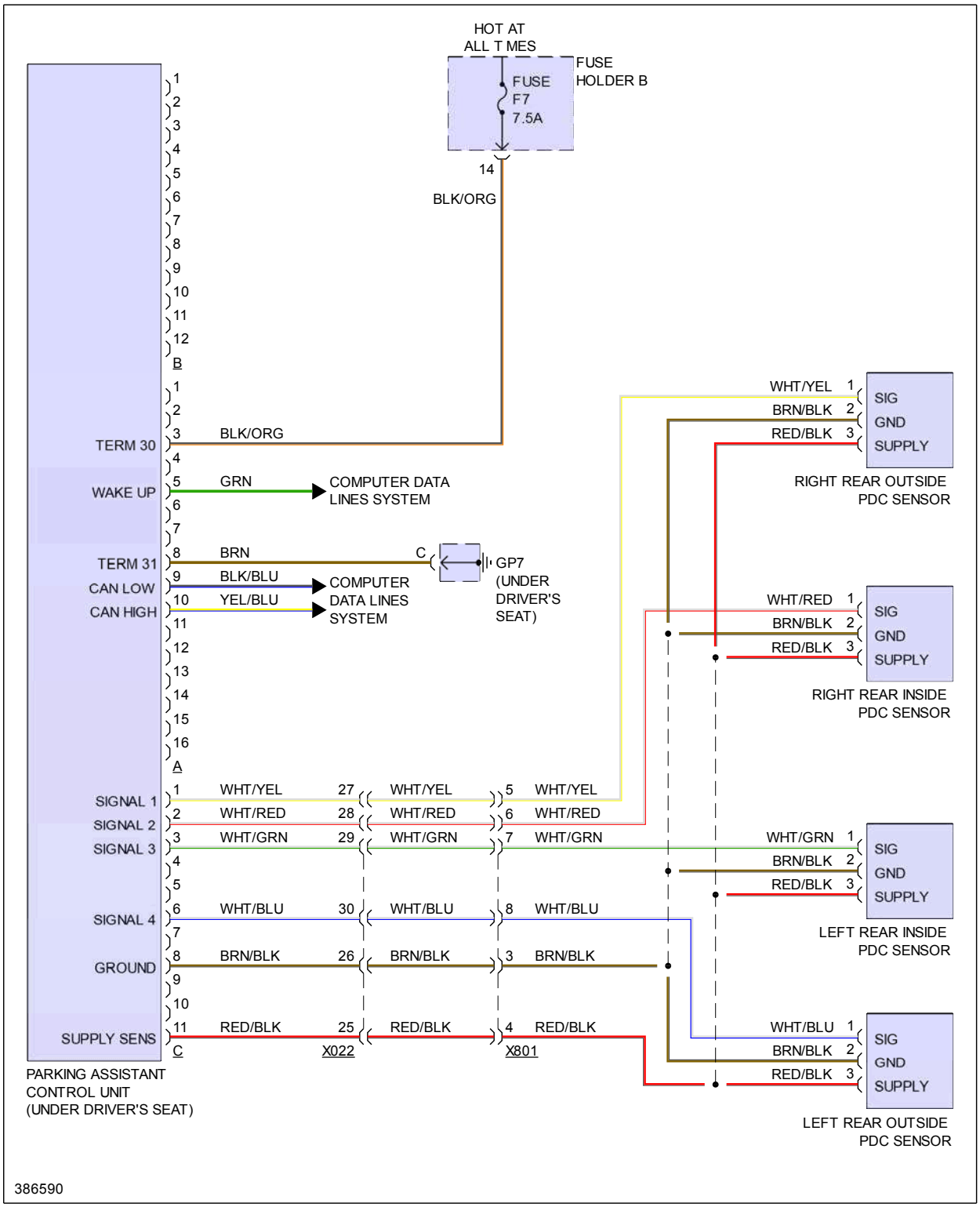

Fig 20: Parking Assistant Circuit, W/O Turbo

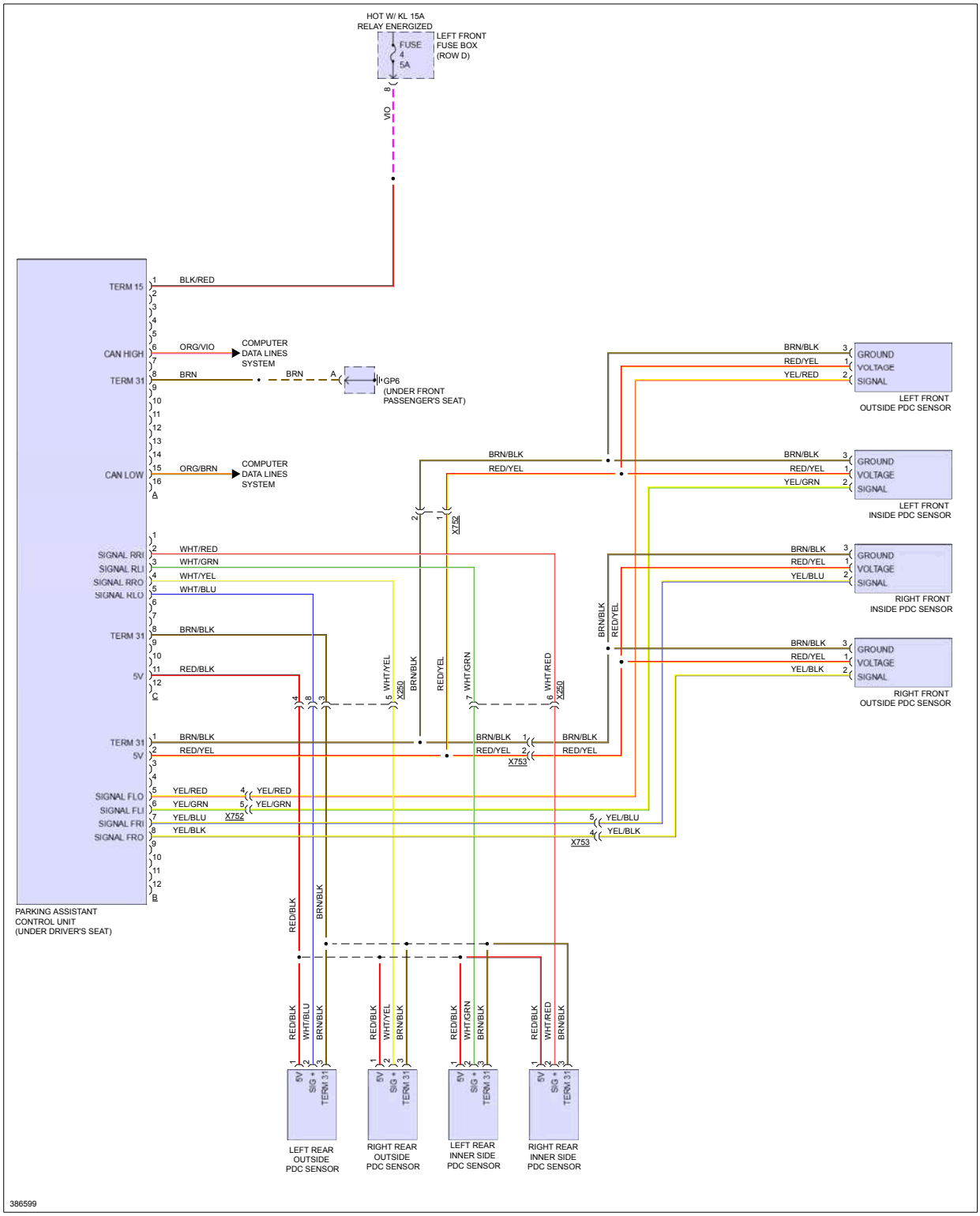

POWER DISTRIBUTION

Fig 1: Power Distribution Circuit, W/ Turbo (1 of 4)

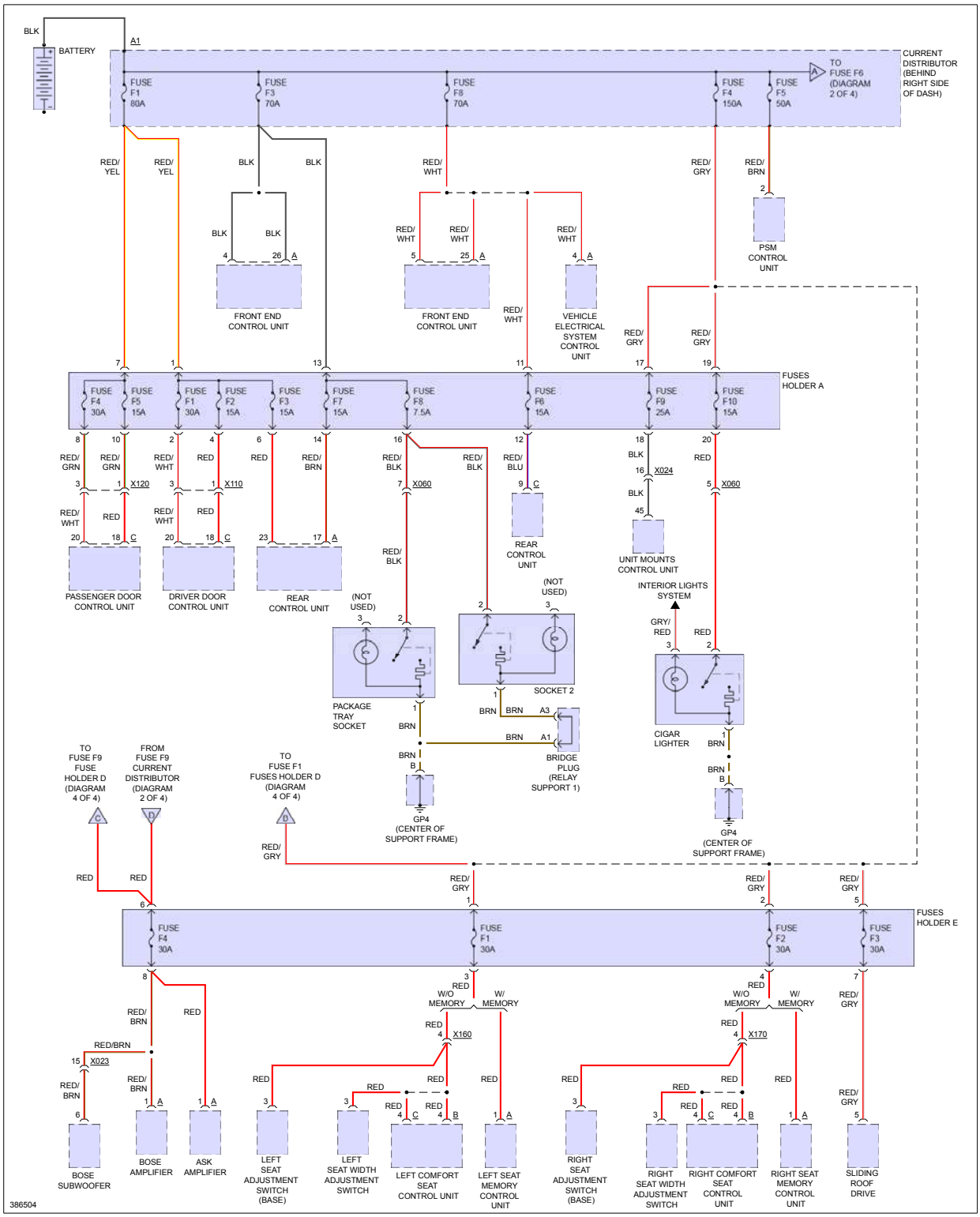

Fig 2: Power Distribution Circuit, W/ Turbo (2 of 4)

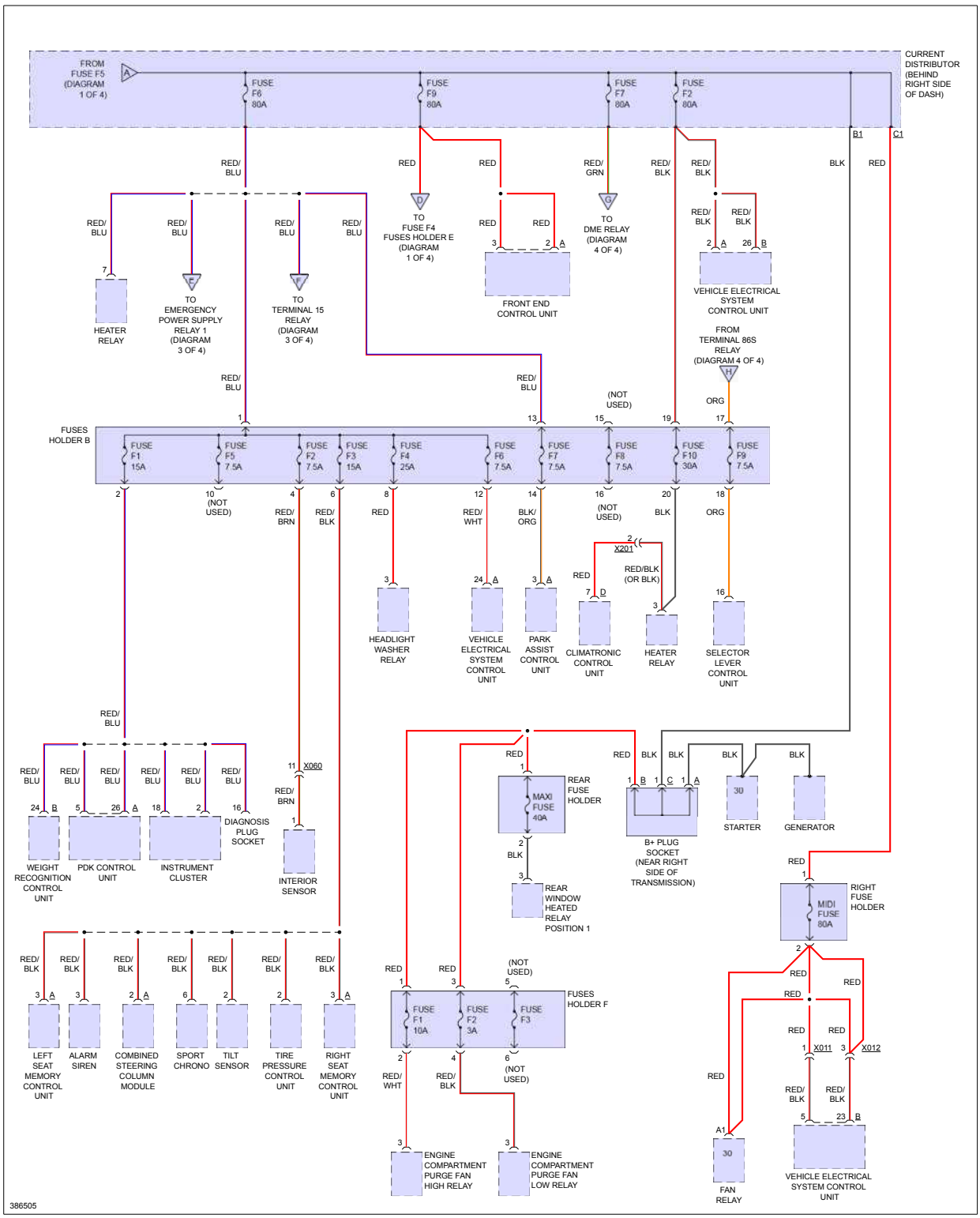

Fig 3: Power Distribution Circuit, W/ Turbo (3 of 4)

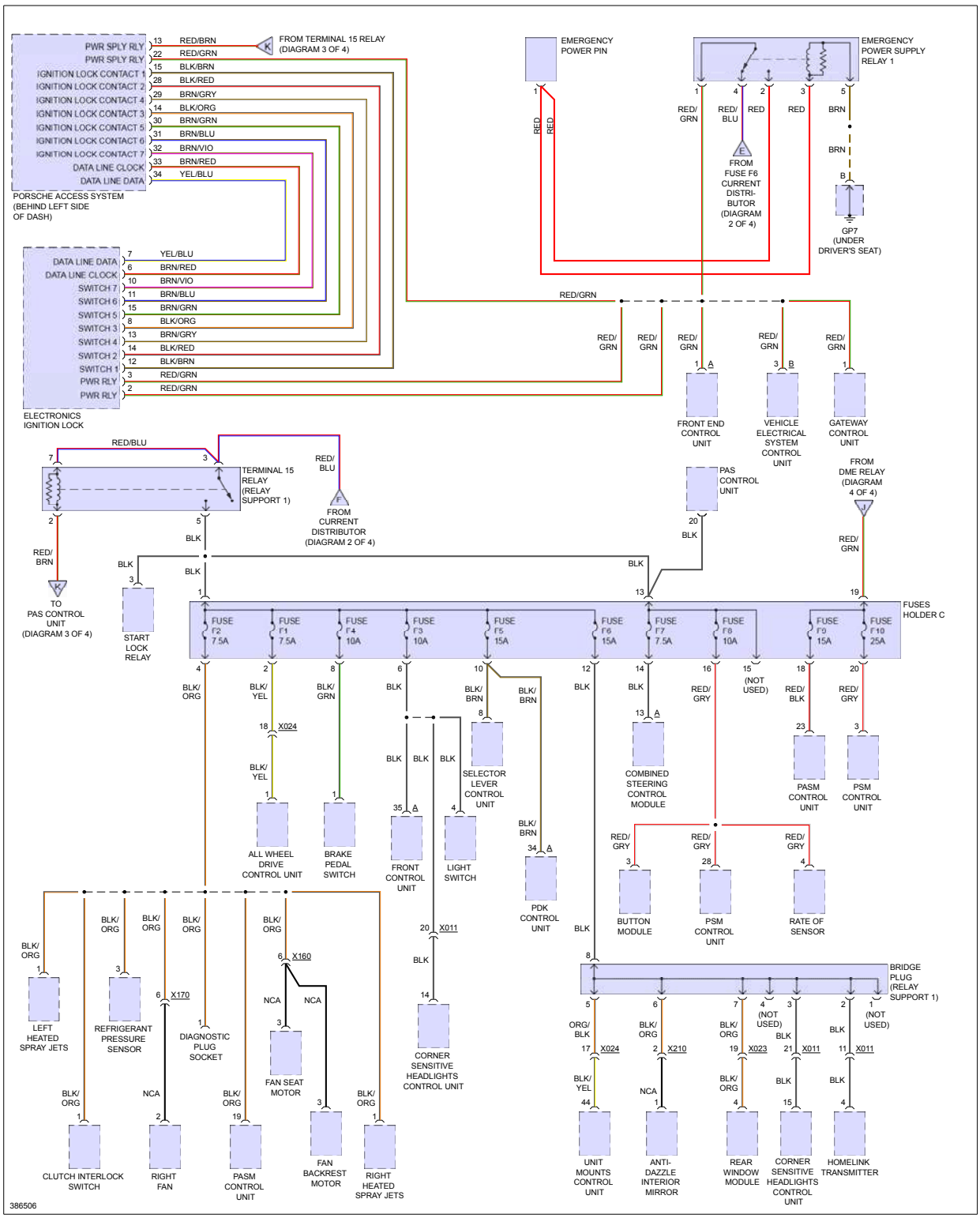

Fig 4: Power Distribution Circuit, W/ Turbo (4 of 4)

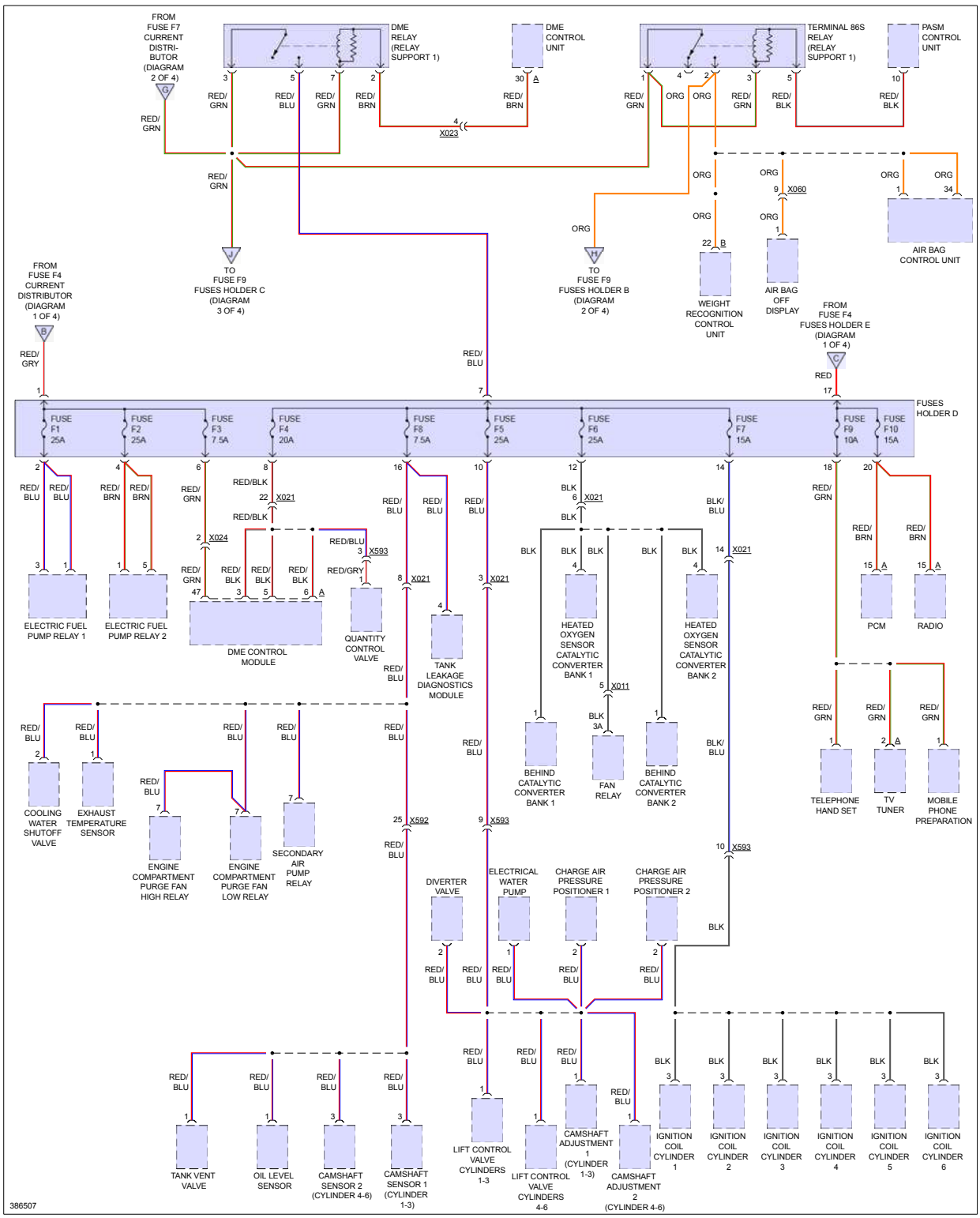

Fig 5: Power Distribution Circuit, W/O Turbo (1 of 5)

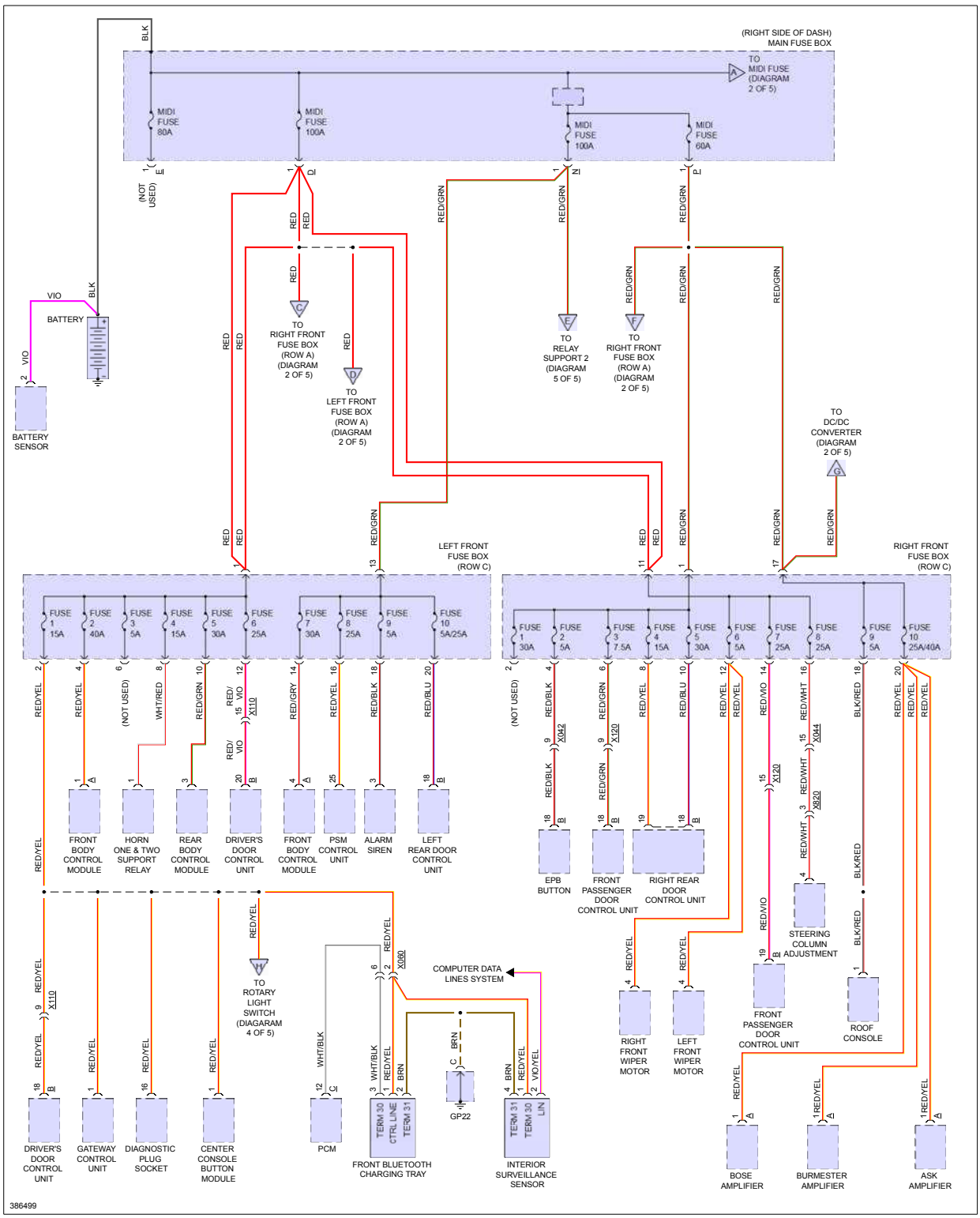

Fig 6: Power Distribution Circuit, W/O Turbo (2 of 5)

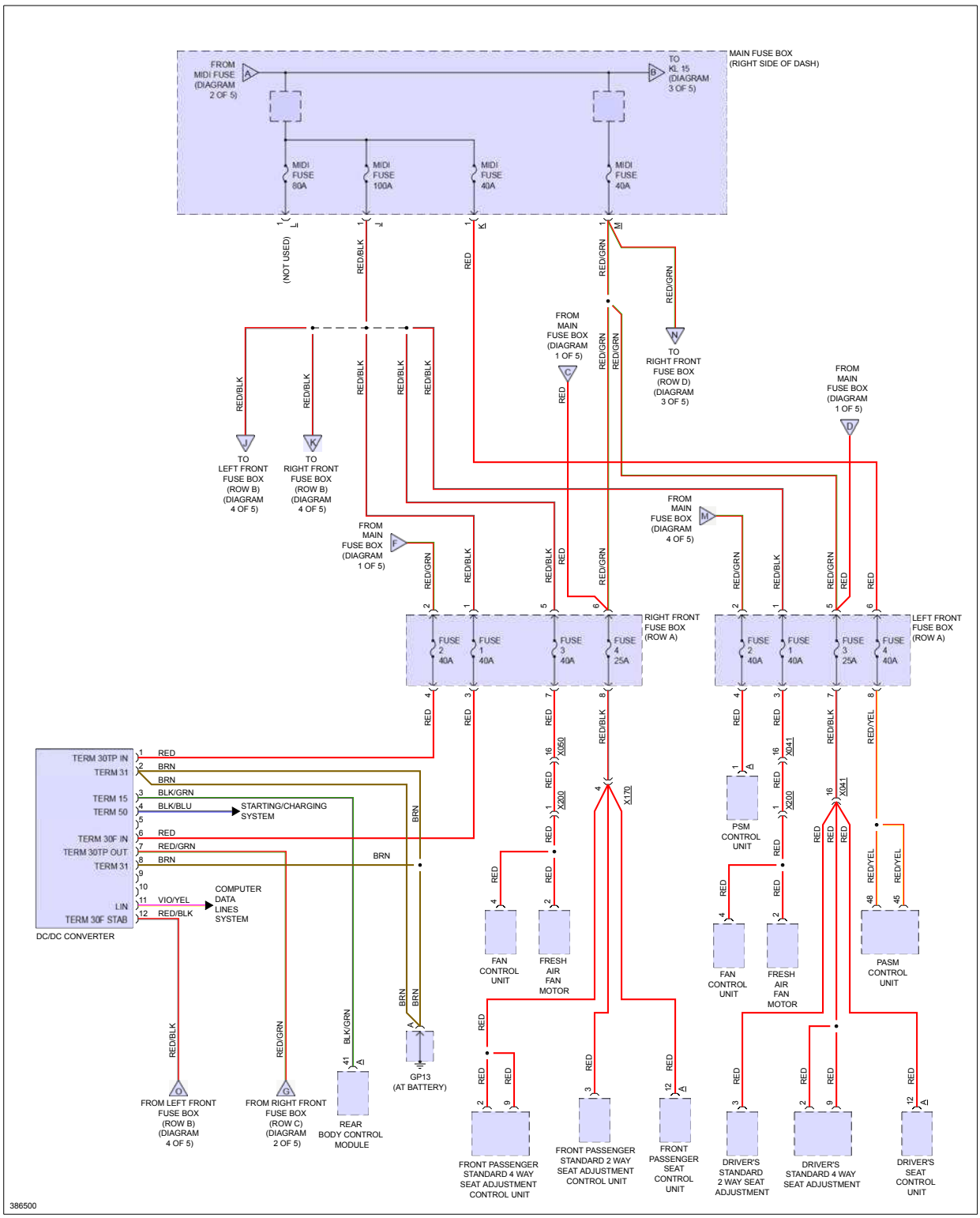

Fig 7: Power Distribution Circuit, W/O Turbo (3 of 5)

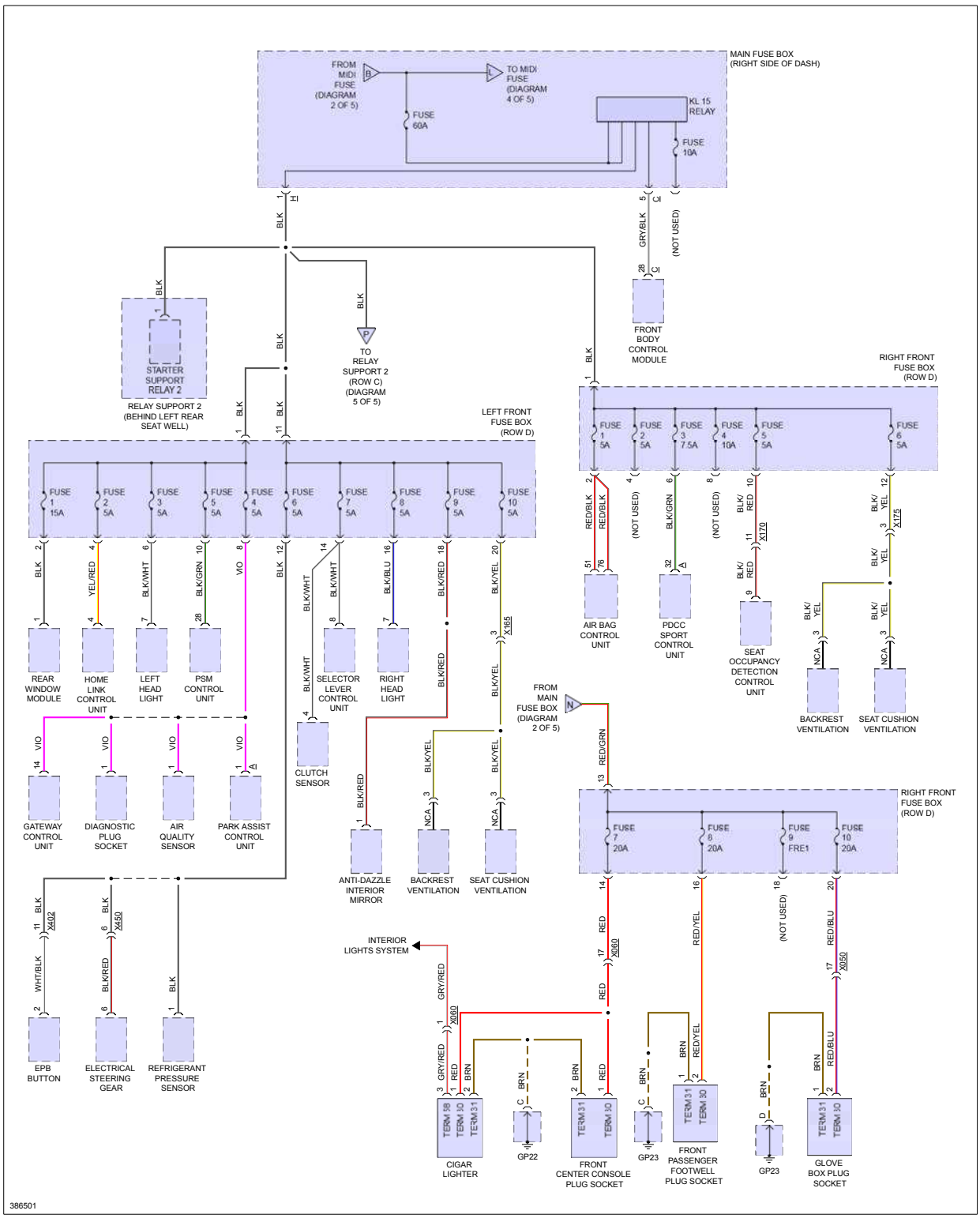

Fig 8: Power Distribution Circuit, W/O Turbo (4 of 5)

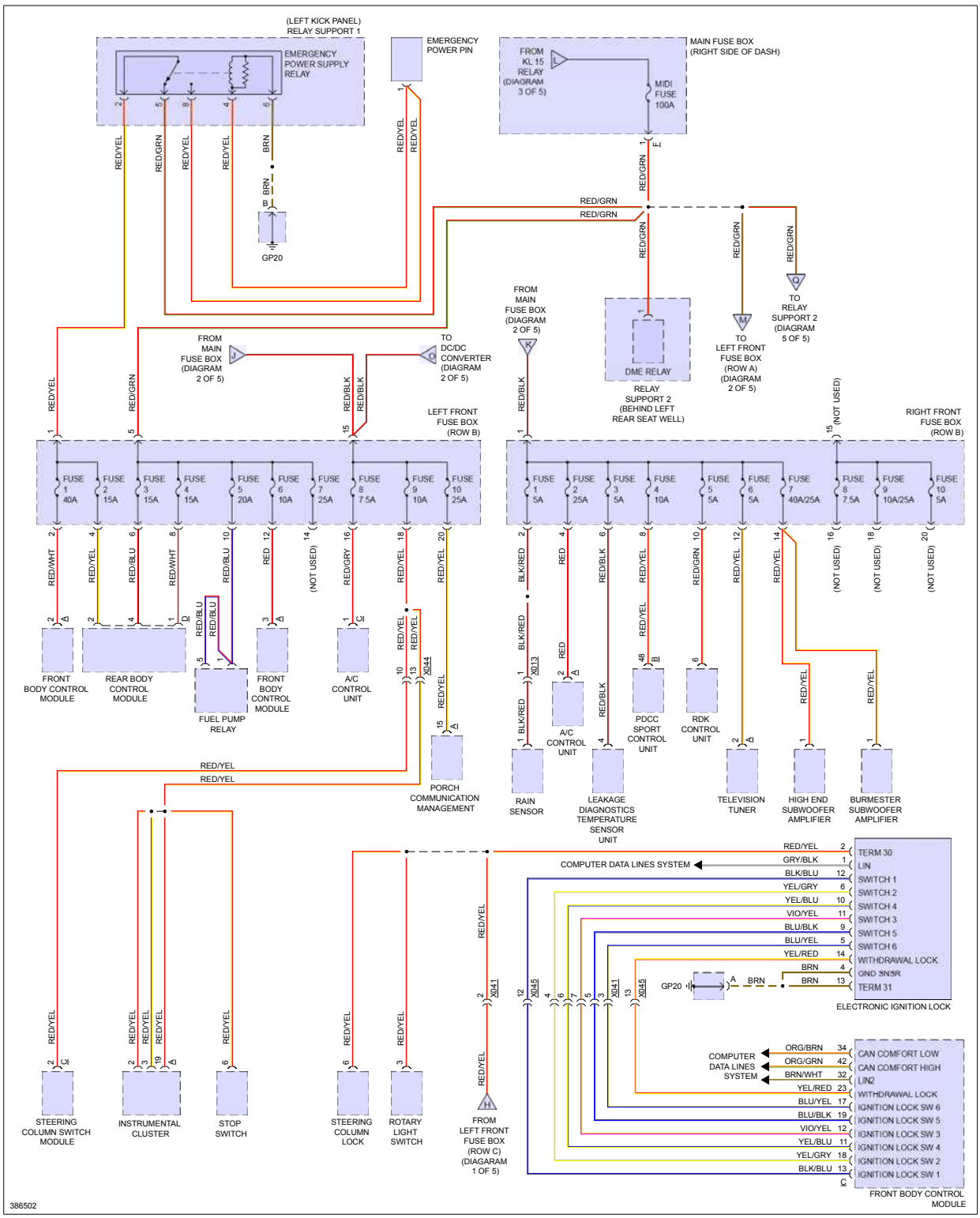

Fig 9: Power Distribution Circuit, W/O Turbo (5 of 5)

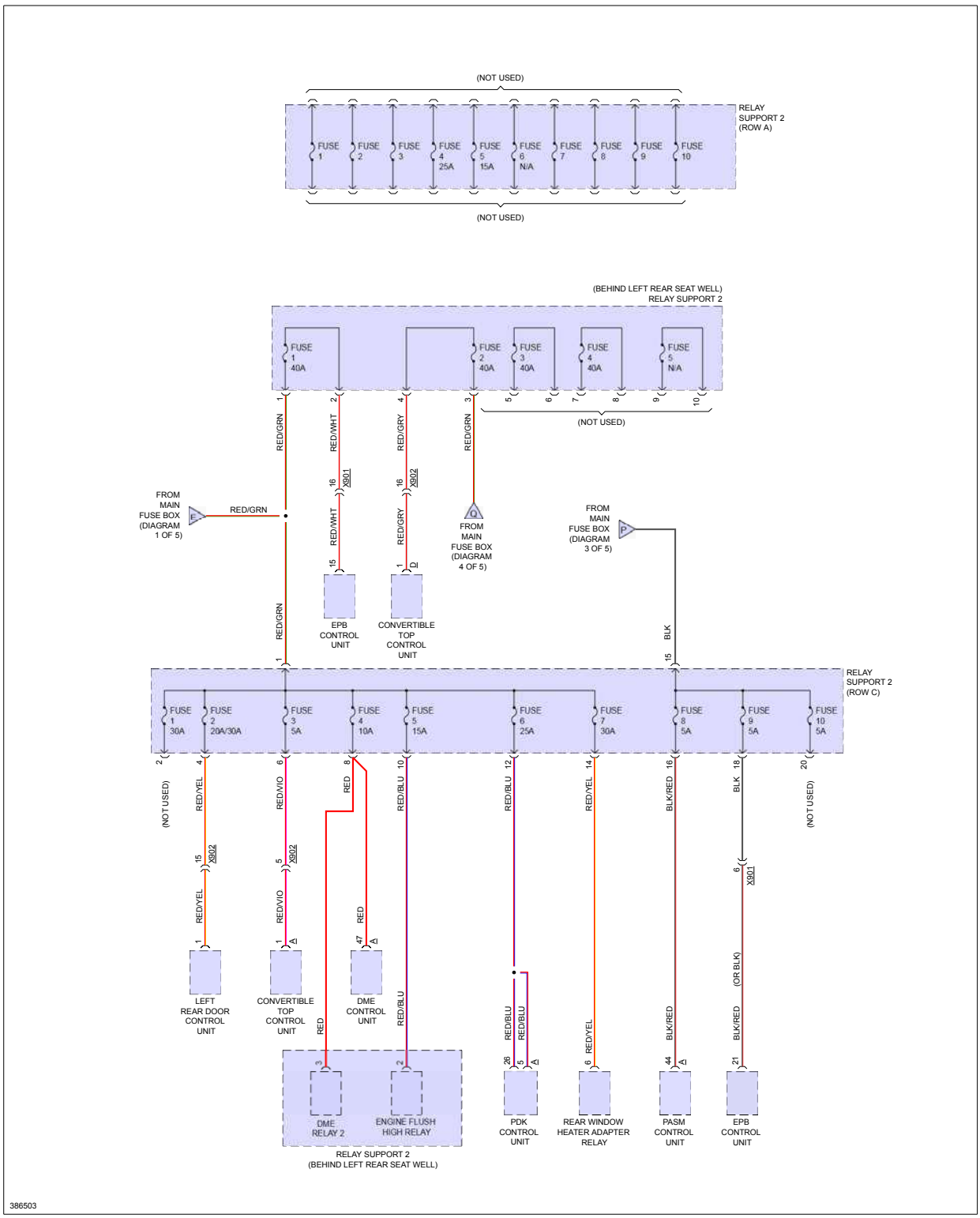

POWER DOOR LOCKS

Fig 1: Power Door Locks Circuit, W/ Turbo (1 of 2)

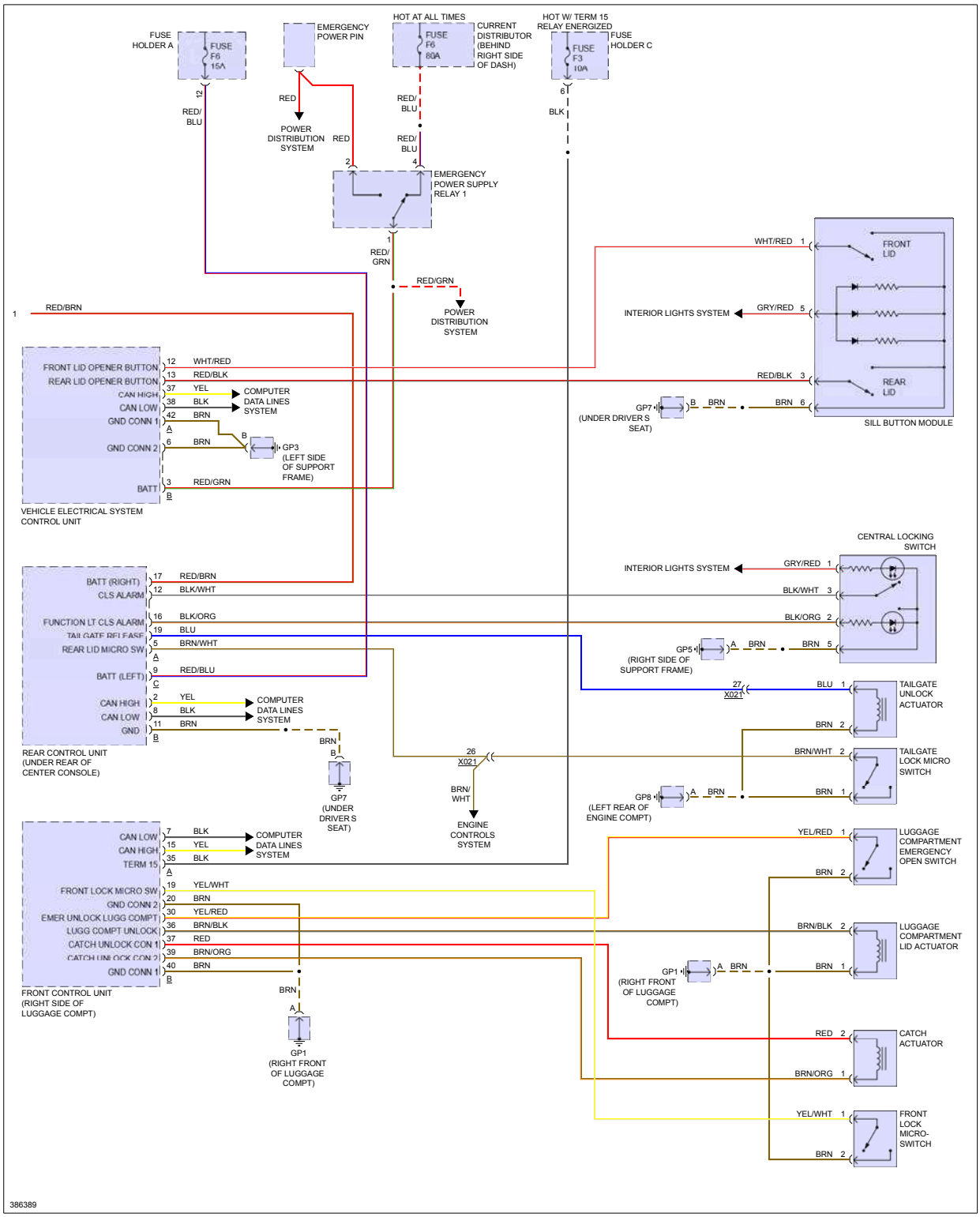

Fig 2: Power Door Locks Circuit, W/ Turbo (2 of 2)

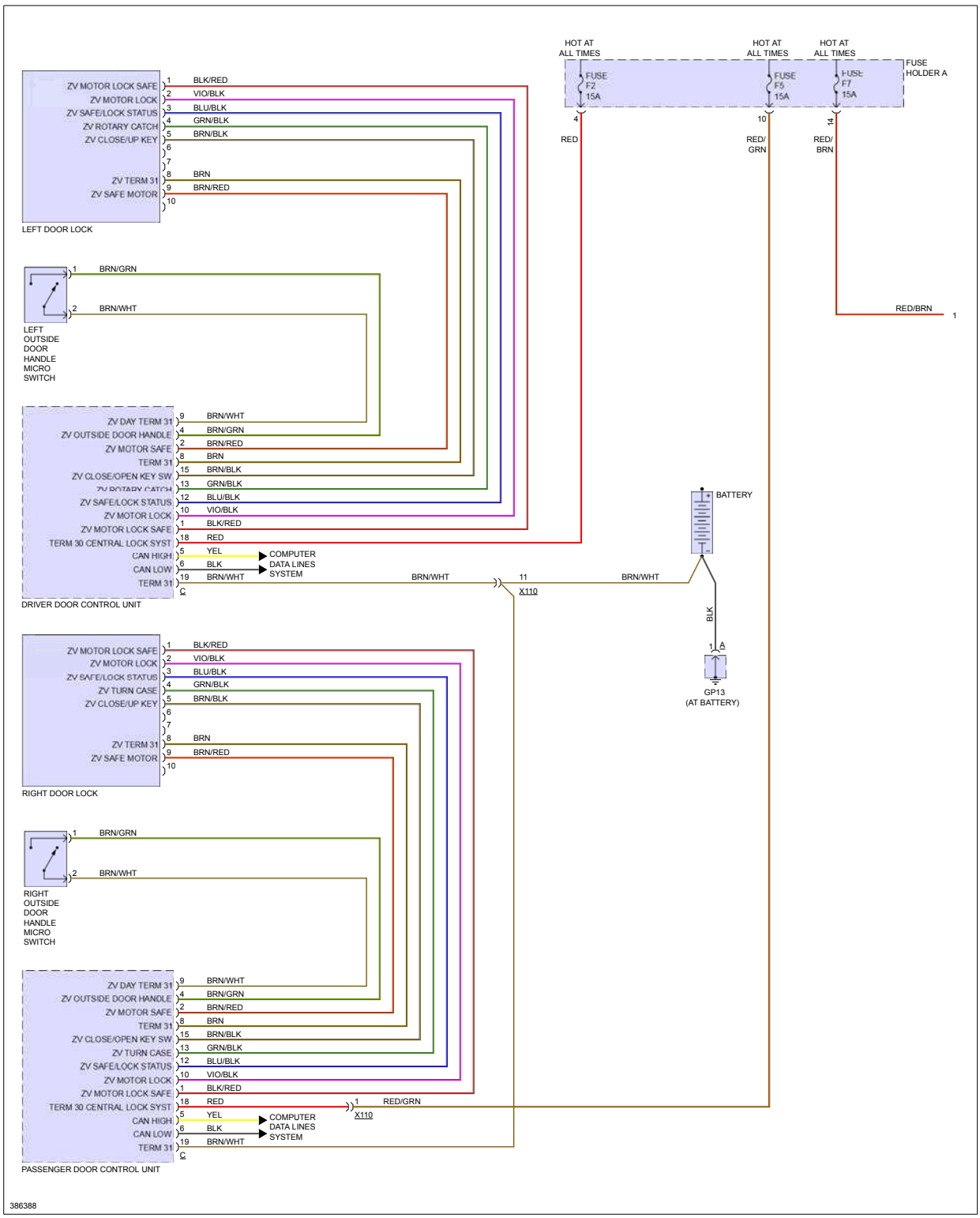

Fig 3: Power Door Locks Circuit, W/O Turbo (1 of 2)

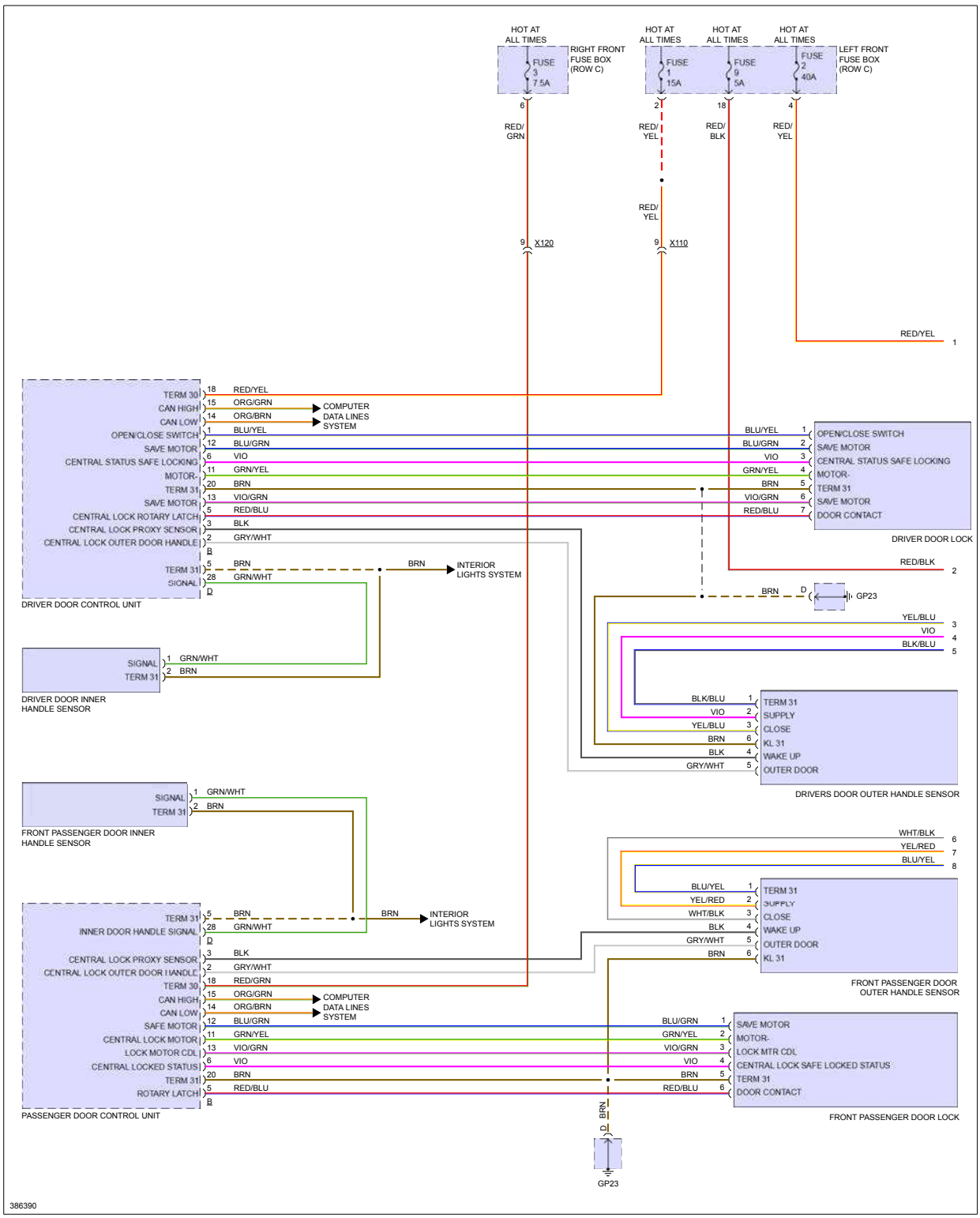

Fig 4: Power Door Locks Circuit, W/O Turbo (2 of 2)

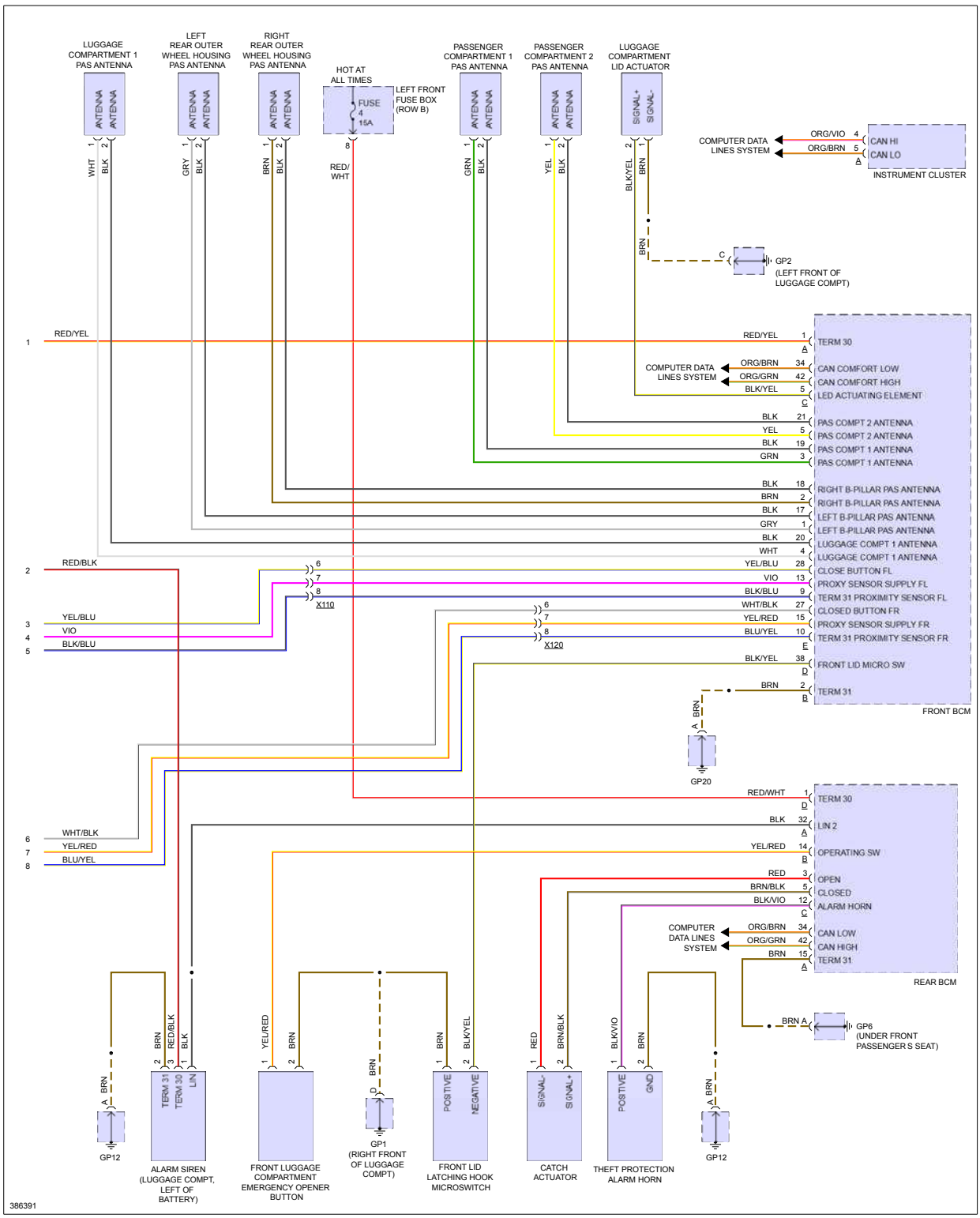

POWER MIRRORS

Fig 1: Auto Anti-dazzling Mirror Circuit, W/ Turbo

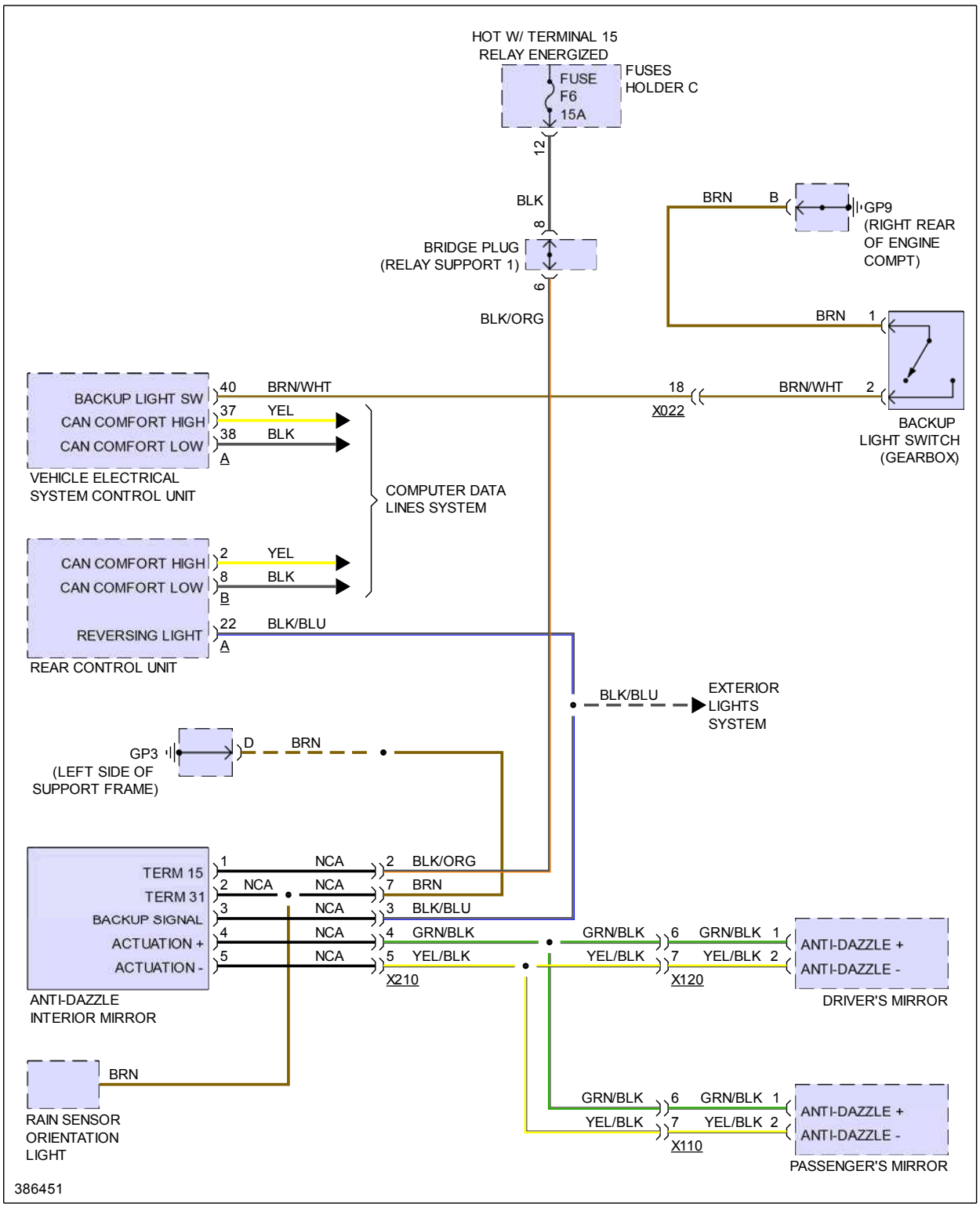

Fig 2: Auto Anti-dazzling Mirror Circuit, W/O Turbo

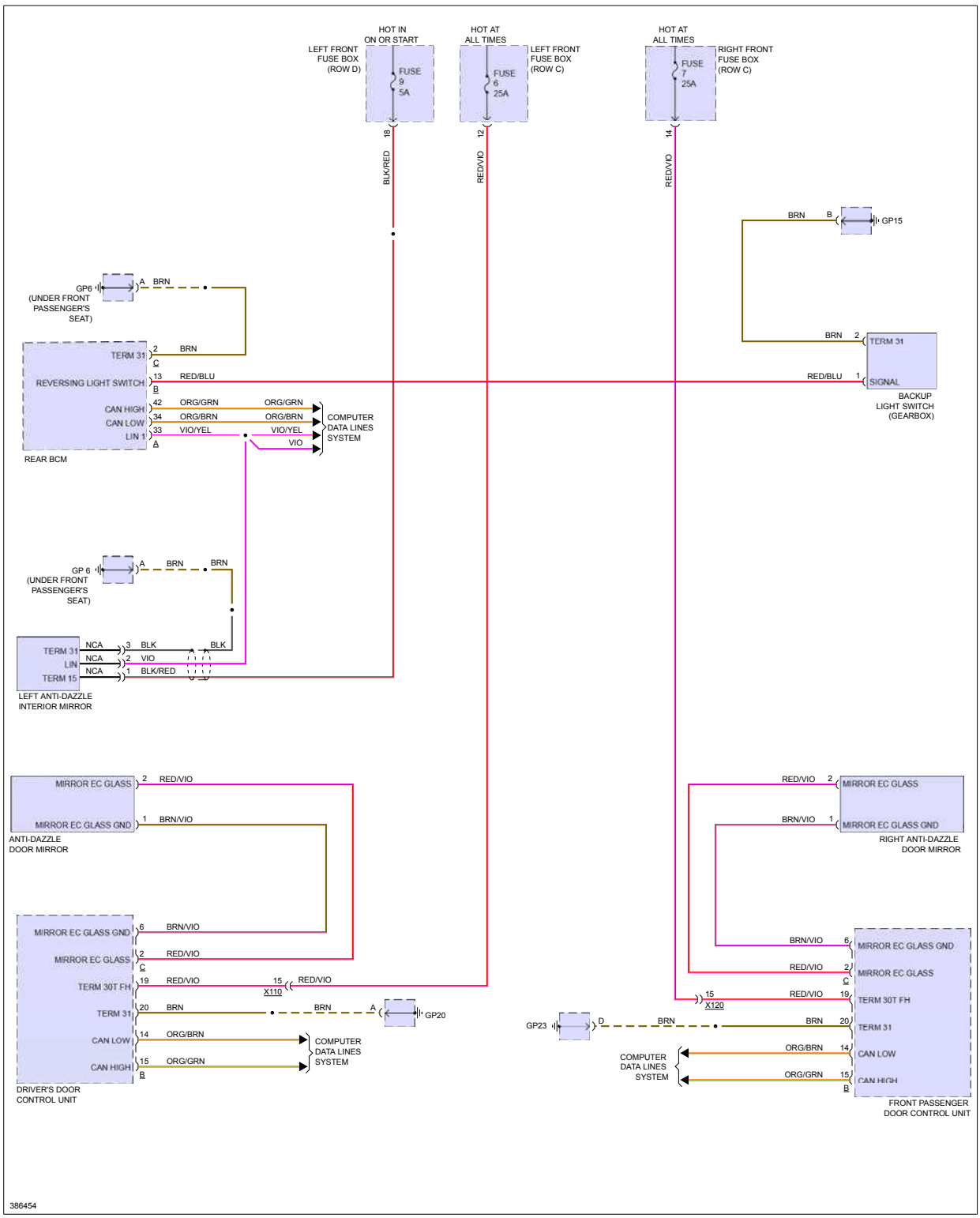

Fig 3: Power Mirrors Circuit, W/ Turbo

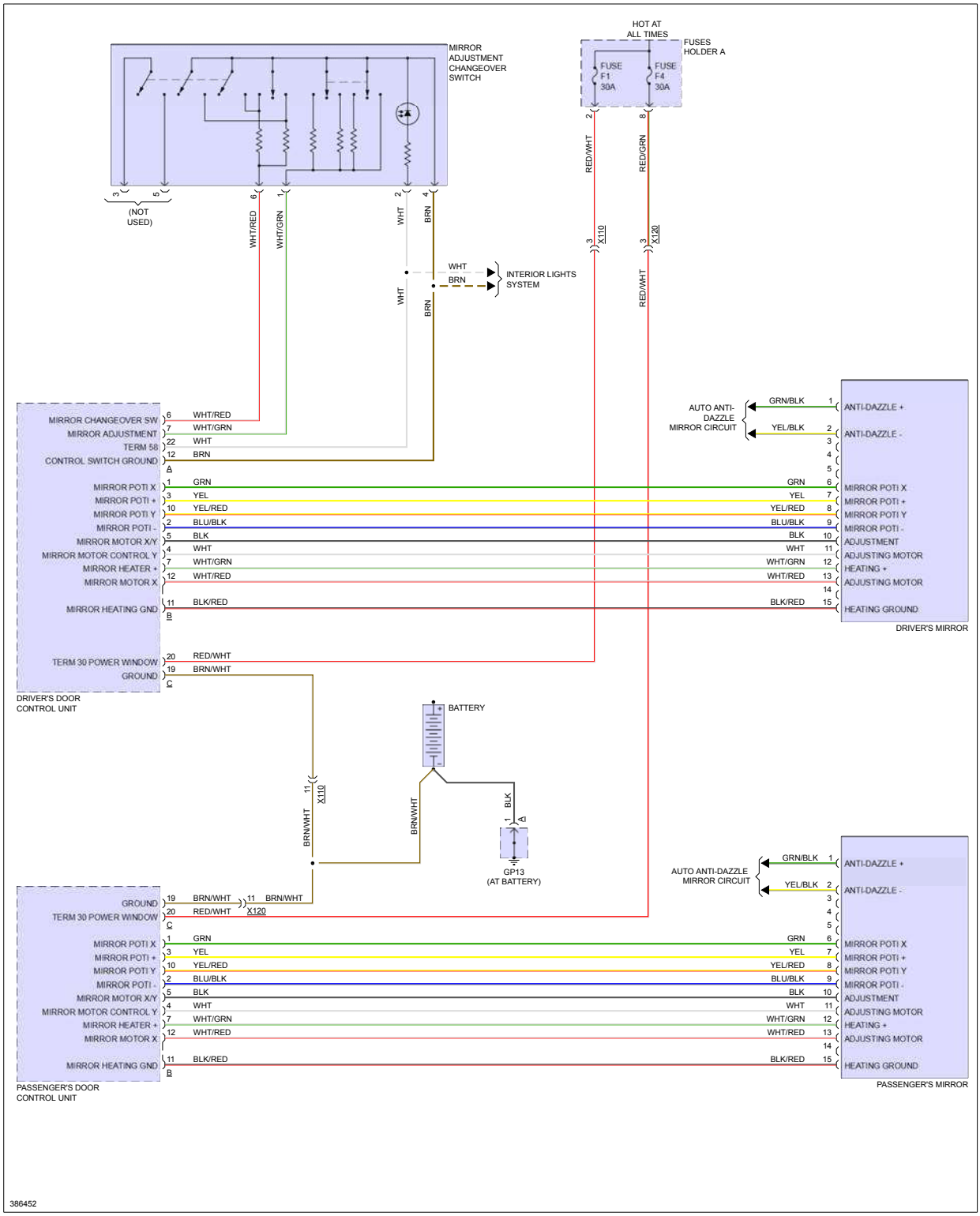

Fig 4: Power Mirrors Circuit, W/O Turbo

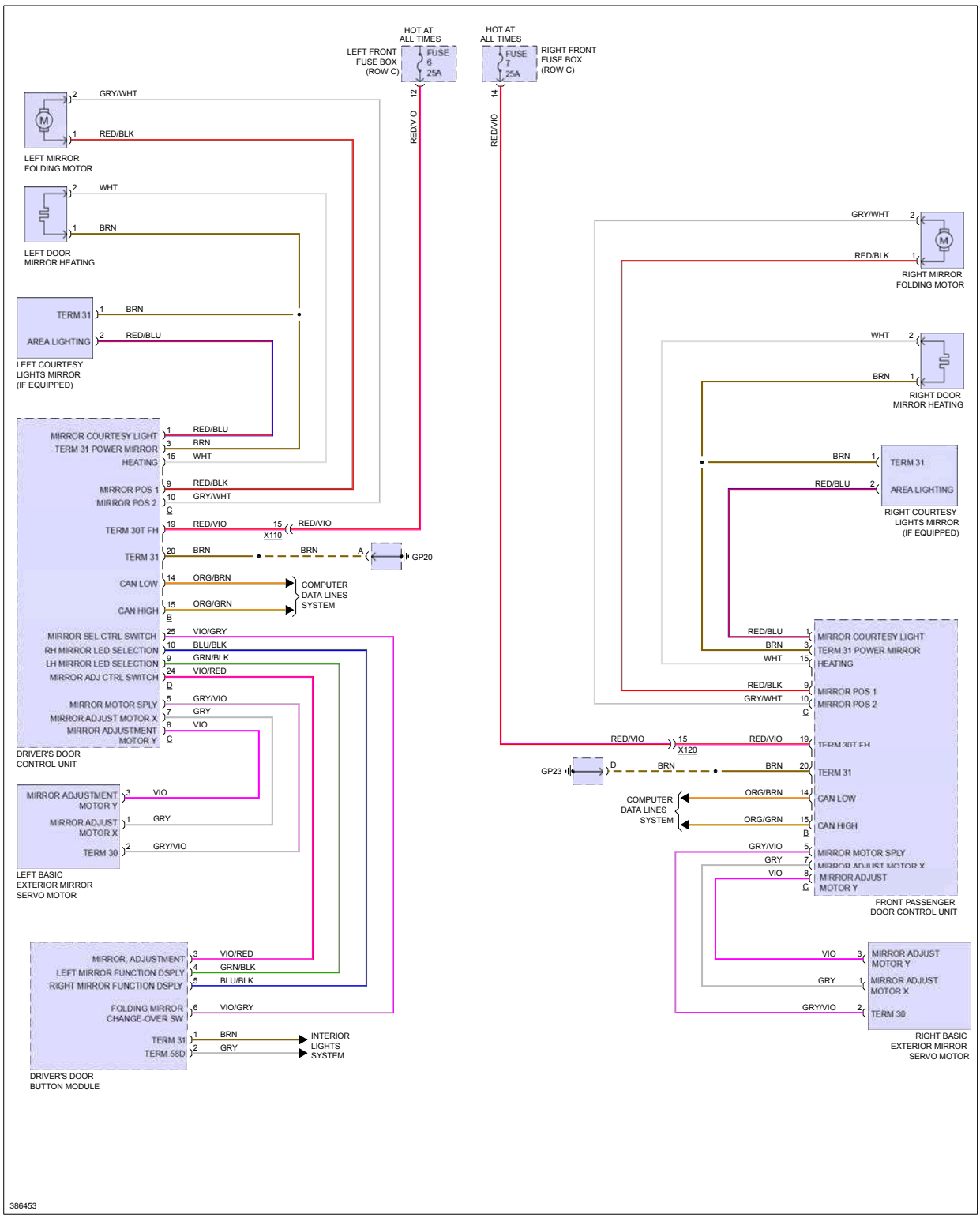

POWER SEATS

Fig 1: Driver Power Seat Circuit, W/ Turbo Base

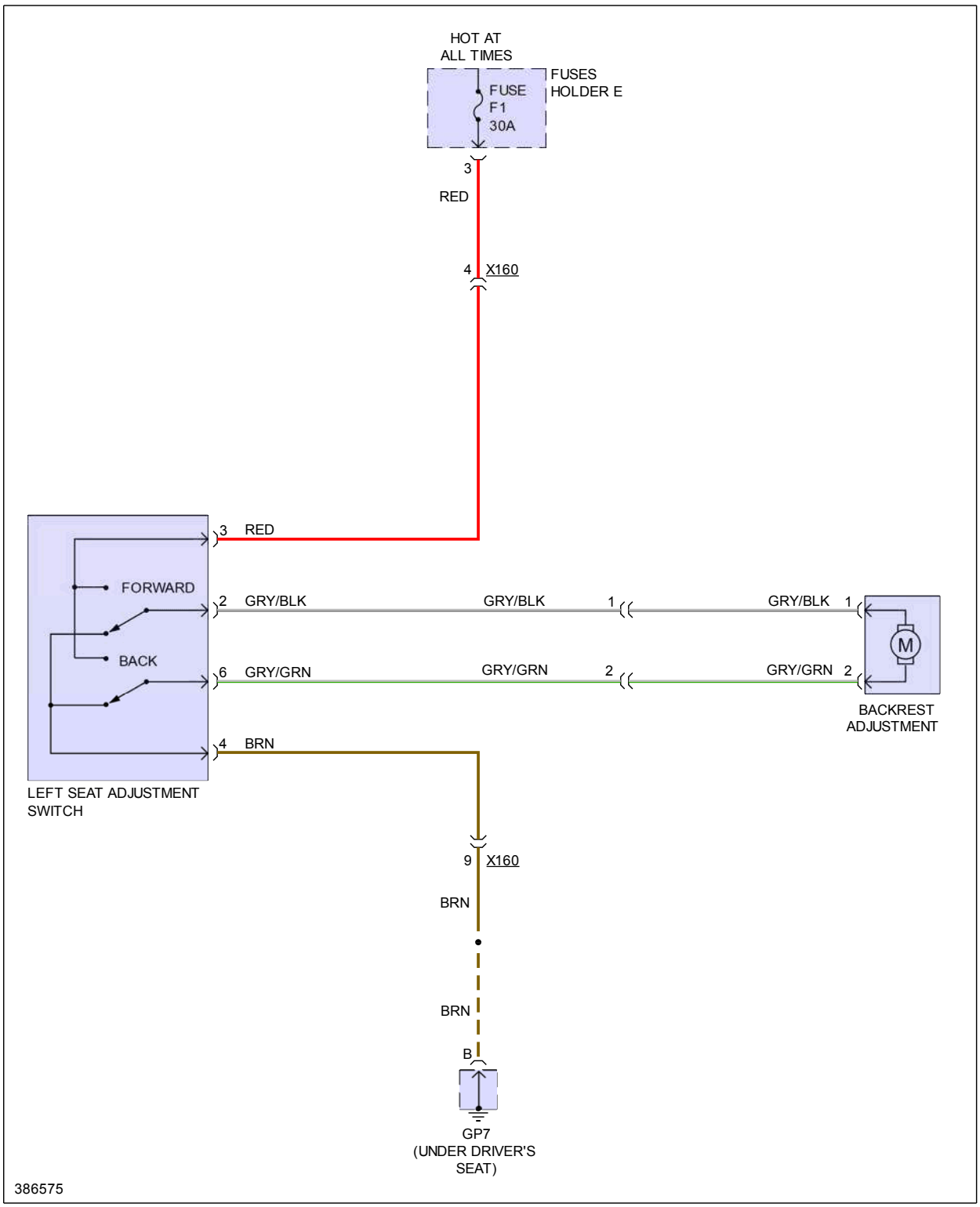

Fig 2: Driver Power Seat Circuit, W/ Turbo Except Base

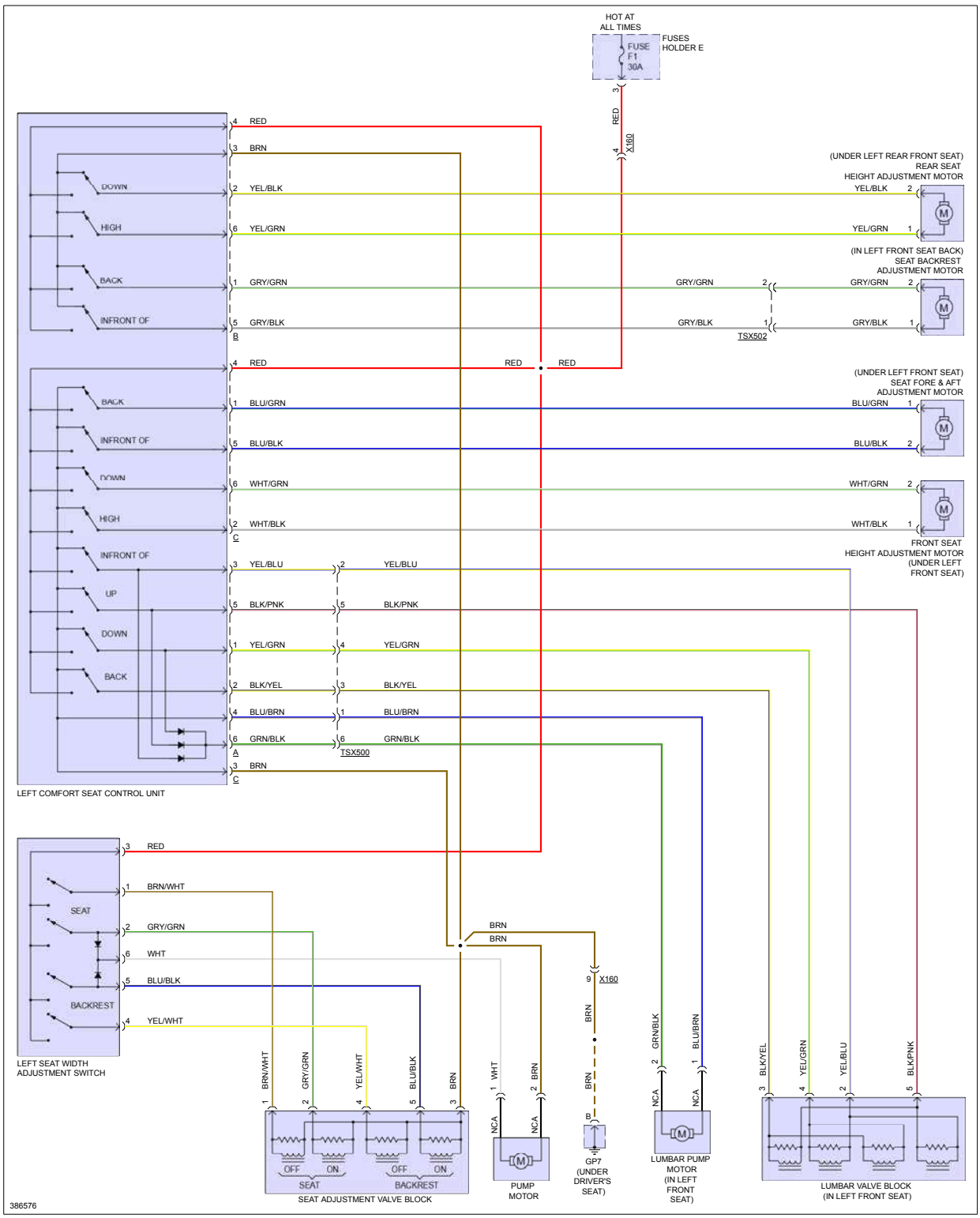

Fig 3: Driver Power Seat Circuit, W/O Turbo Base

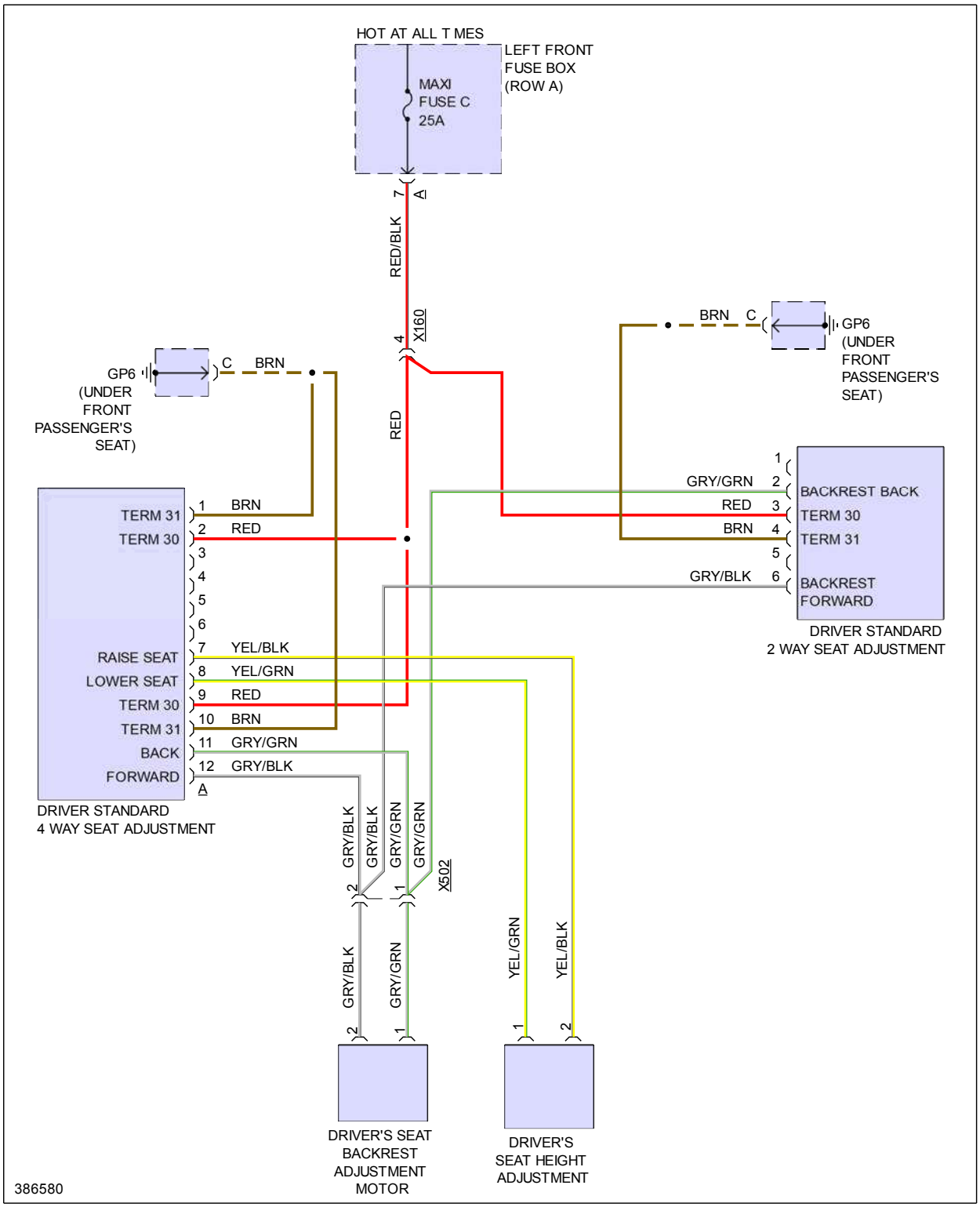

Fig 4: Driver Power Seat Circuit, W/O Turbo Except Base

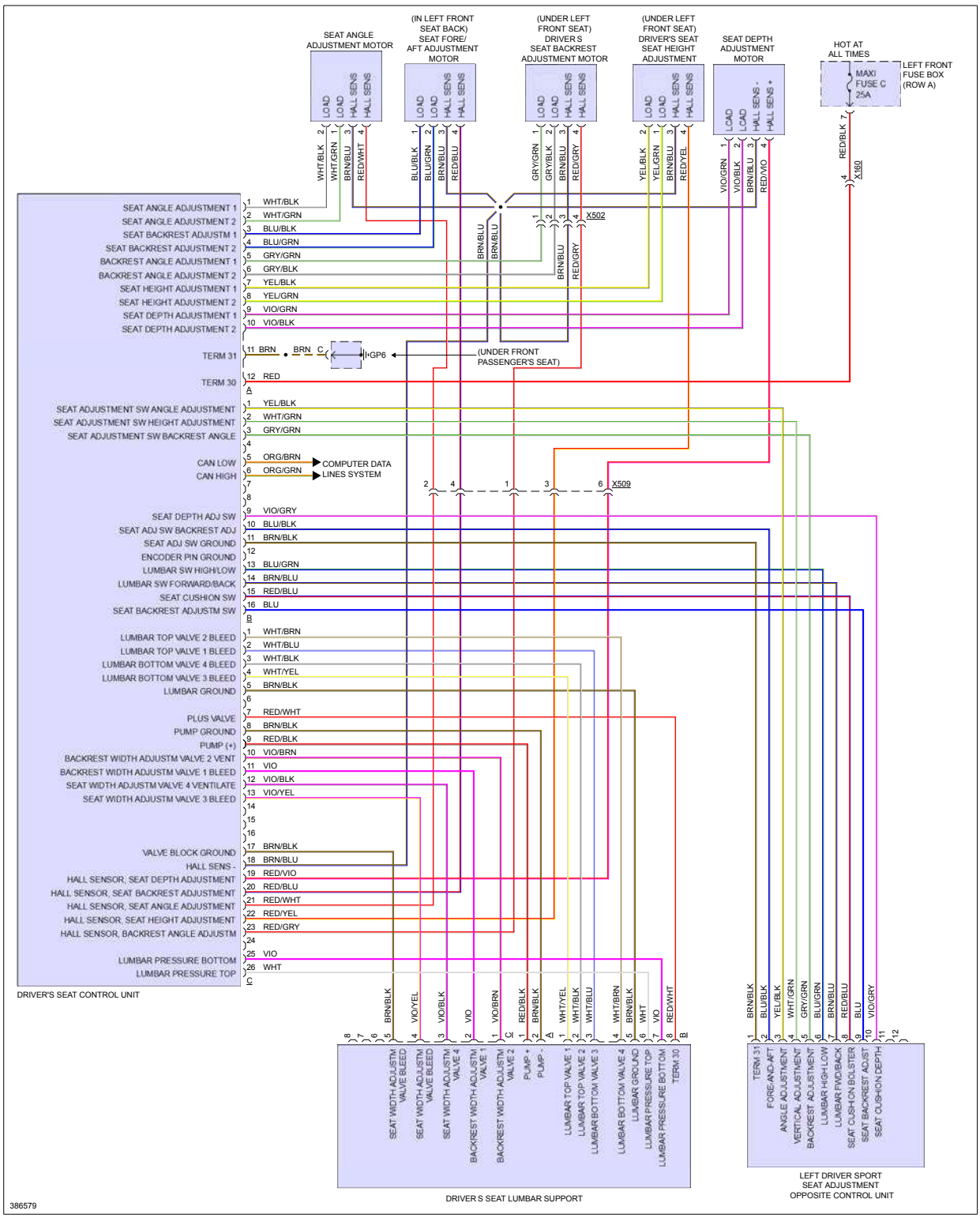

Fig 5: Heated Seats Circuit, W/ Turbo

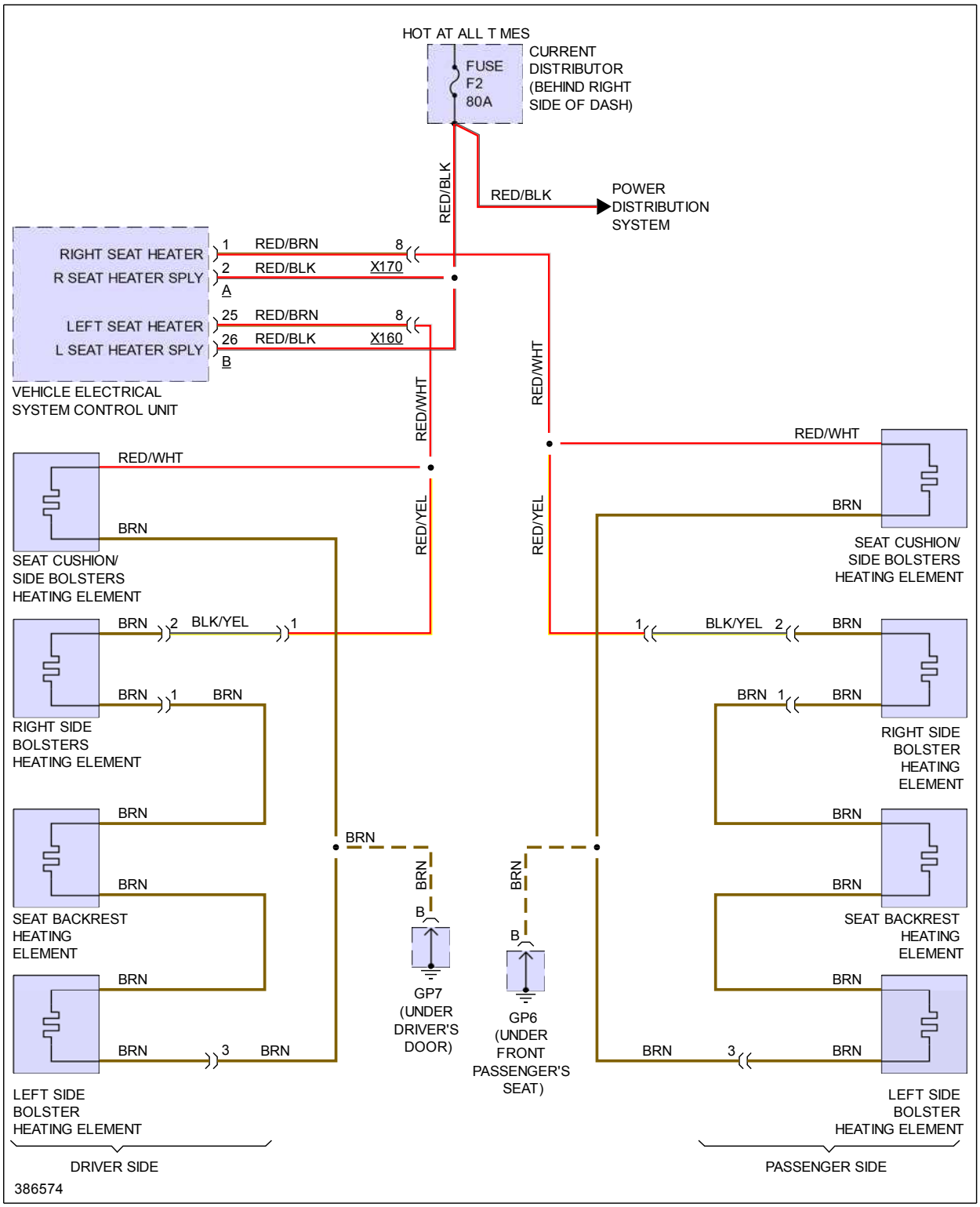

Fig 6: Heated Seats Circuit, W/O Turbo W/ Passenger Power Seat

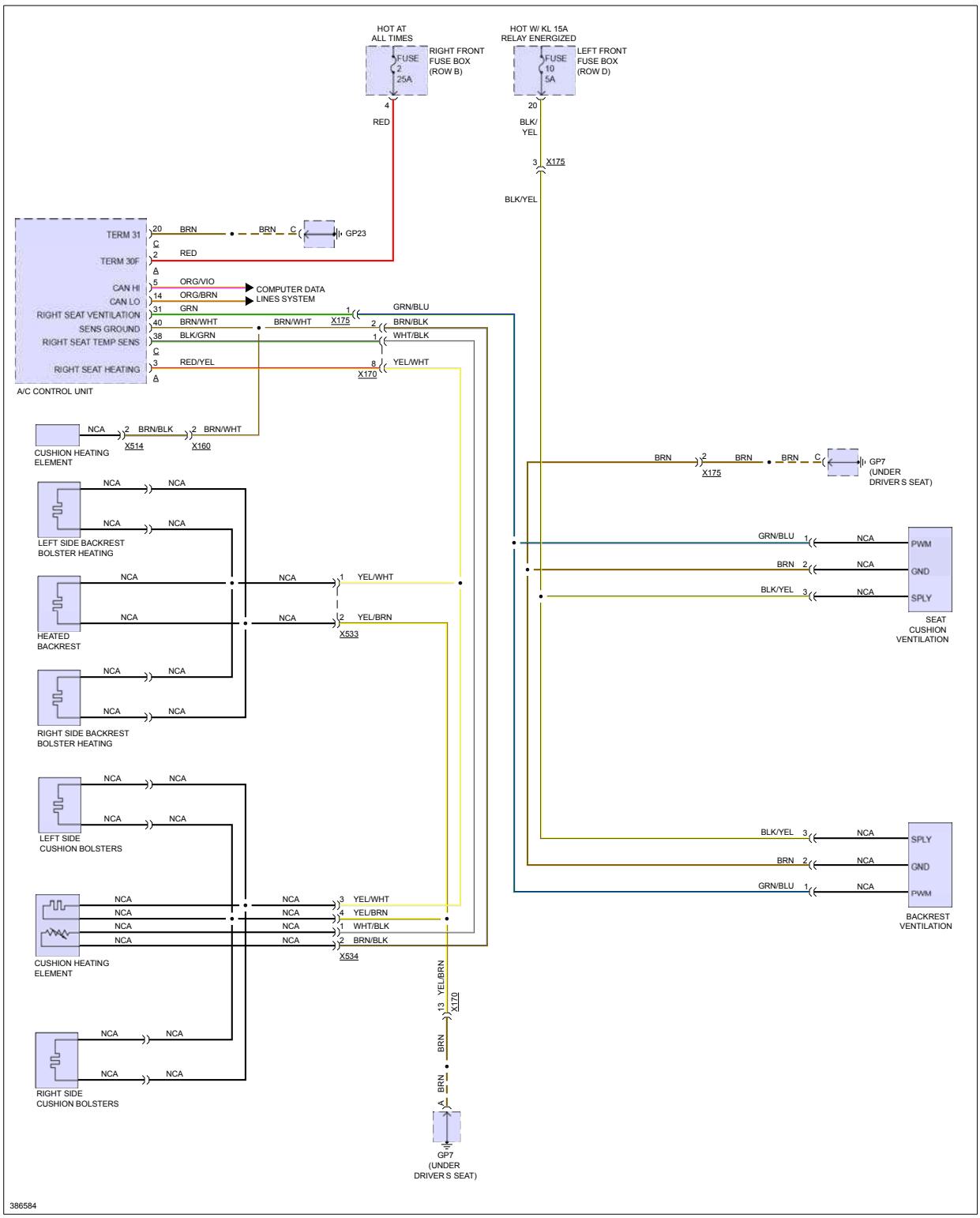

Fig 7: Heated Seats Circuit, W/O Turbo W/O Passenger Power Seat

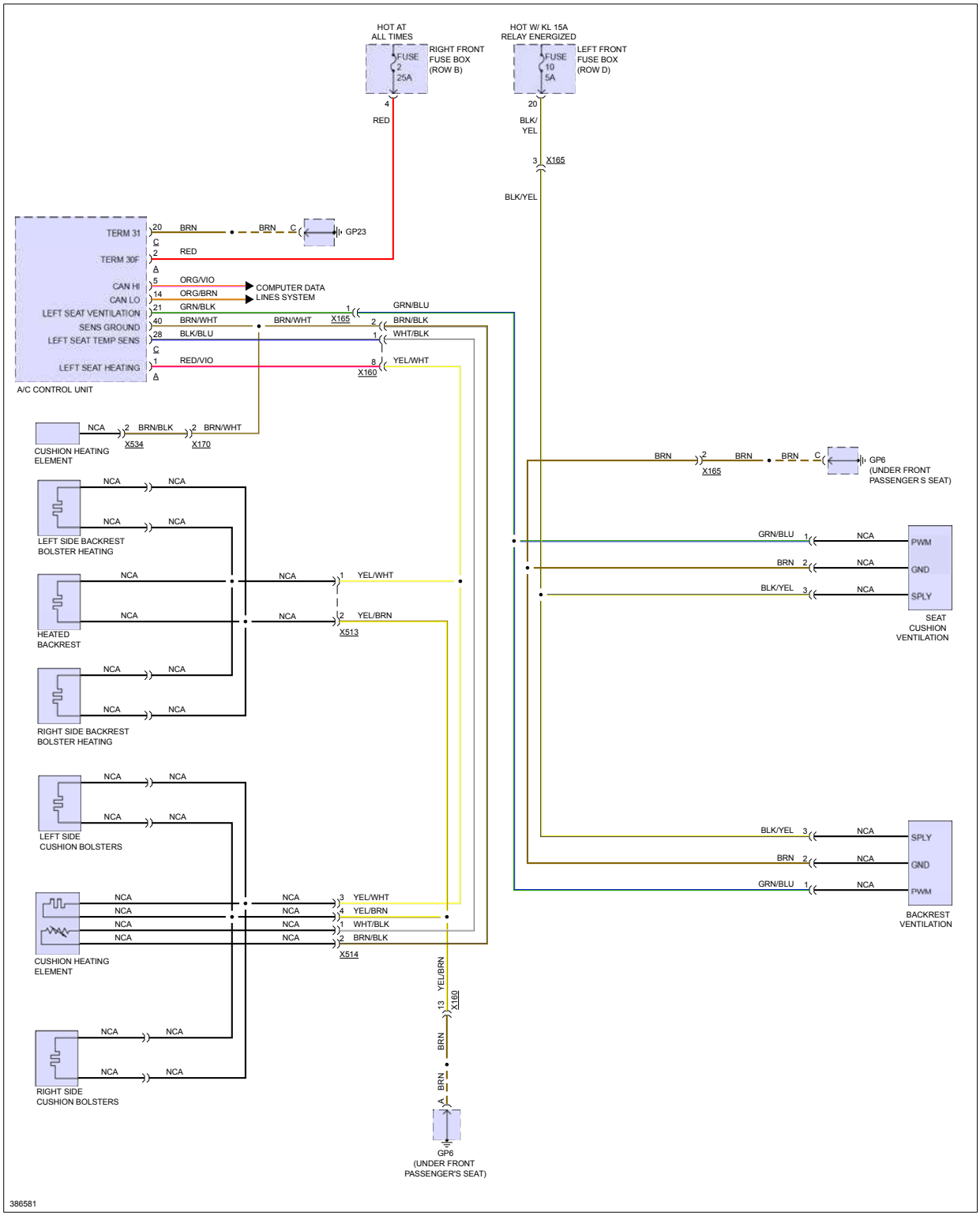

Fig 8: Passenger Power Seat Circuit, W/ Turbo Base

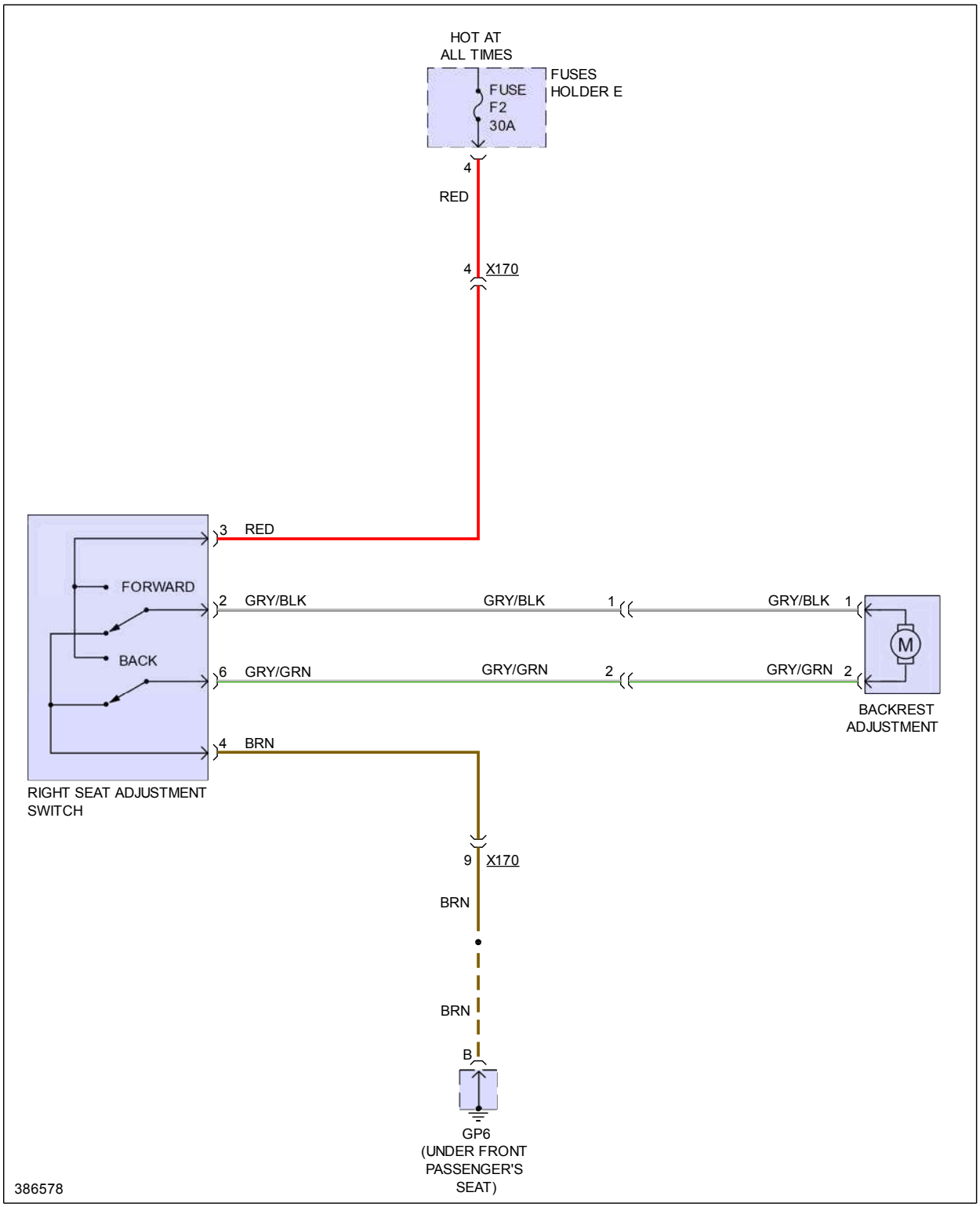

Fig 9: Passenger Power Seat Circuit, W/ Turbo Except Base

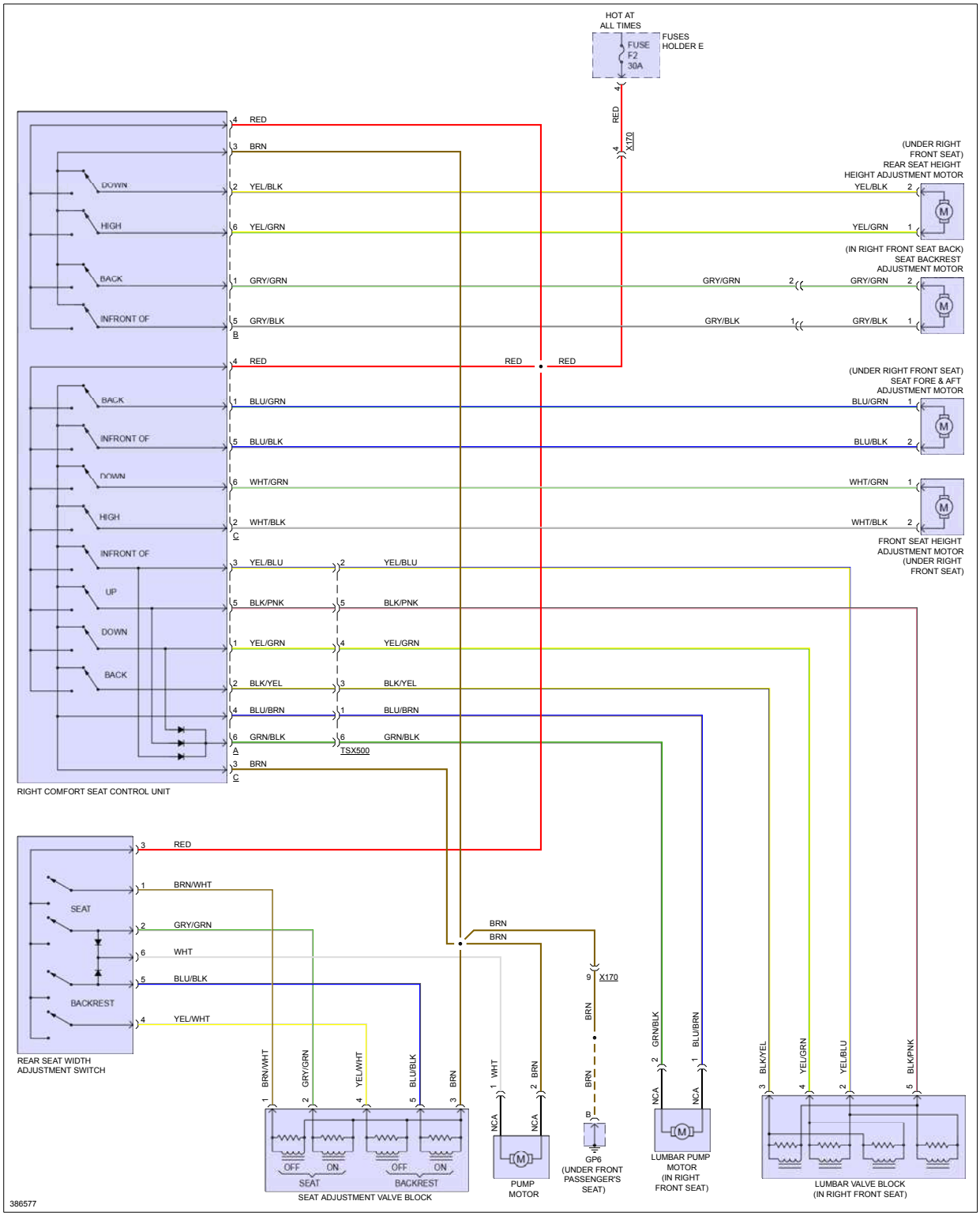

Fig 10: Passenger Power Seat Circuit, W/O Turbo Base

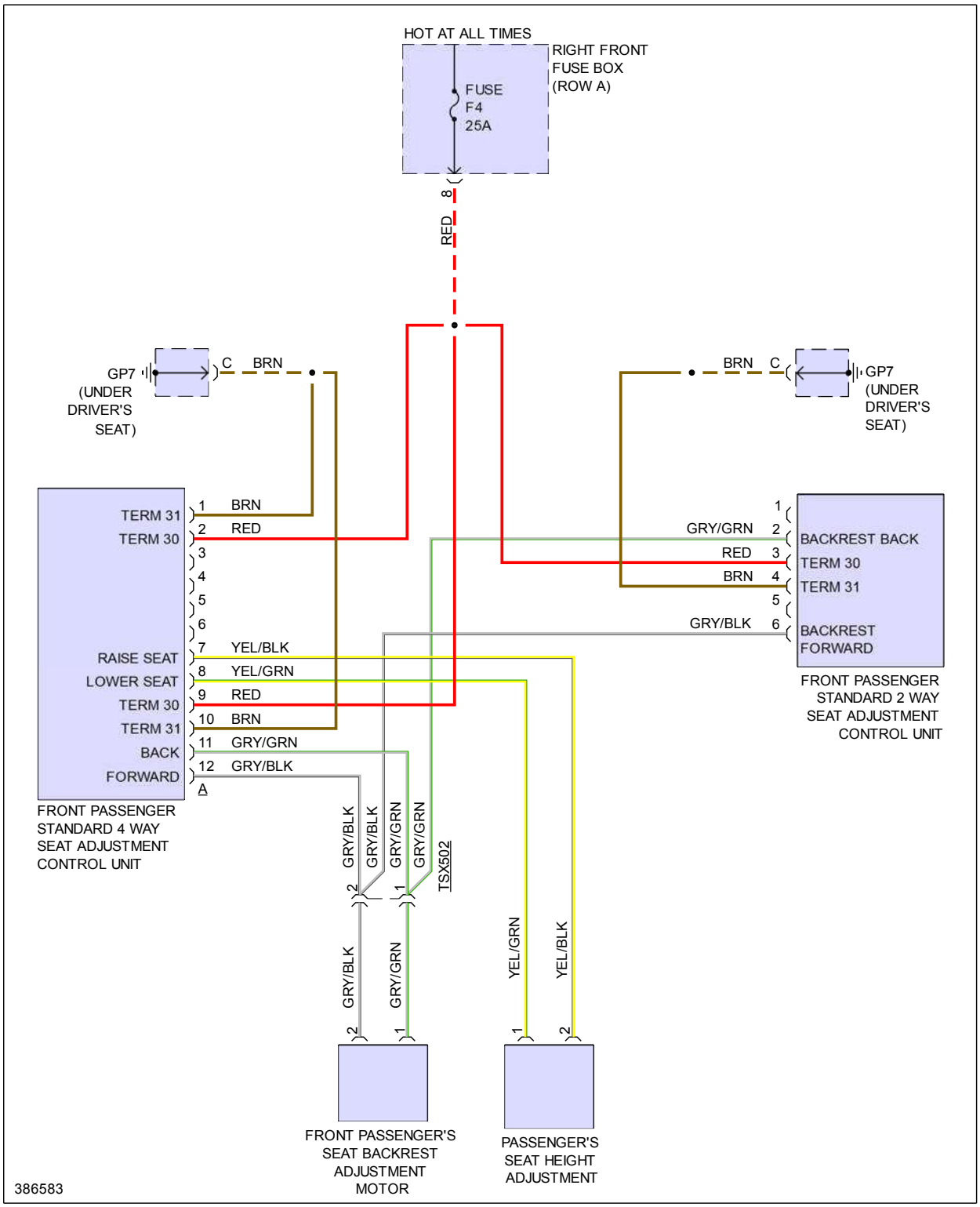

Fig 11: Passenger Power Seat Circuit, W/O Turbo Except Base

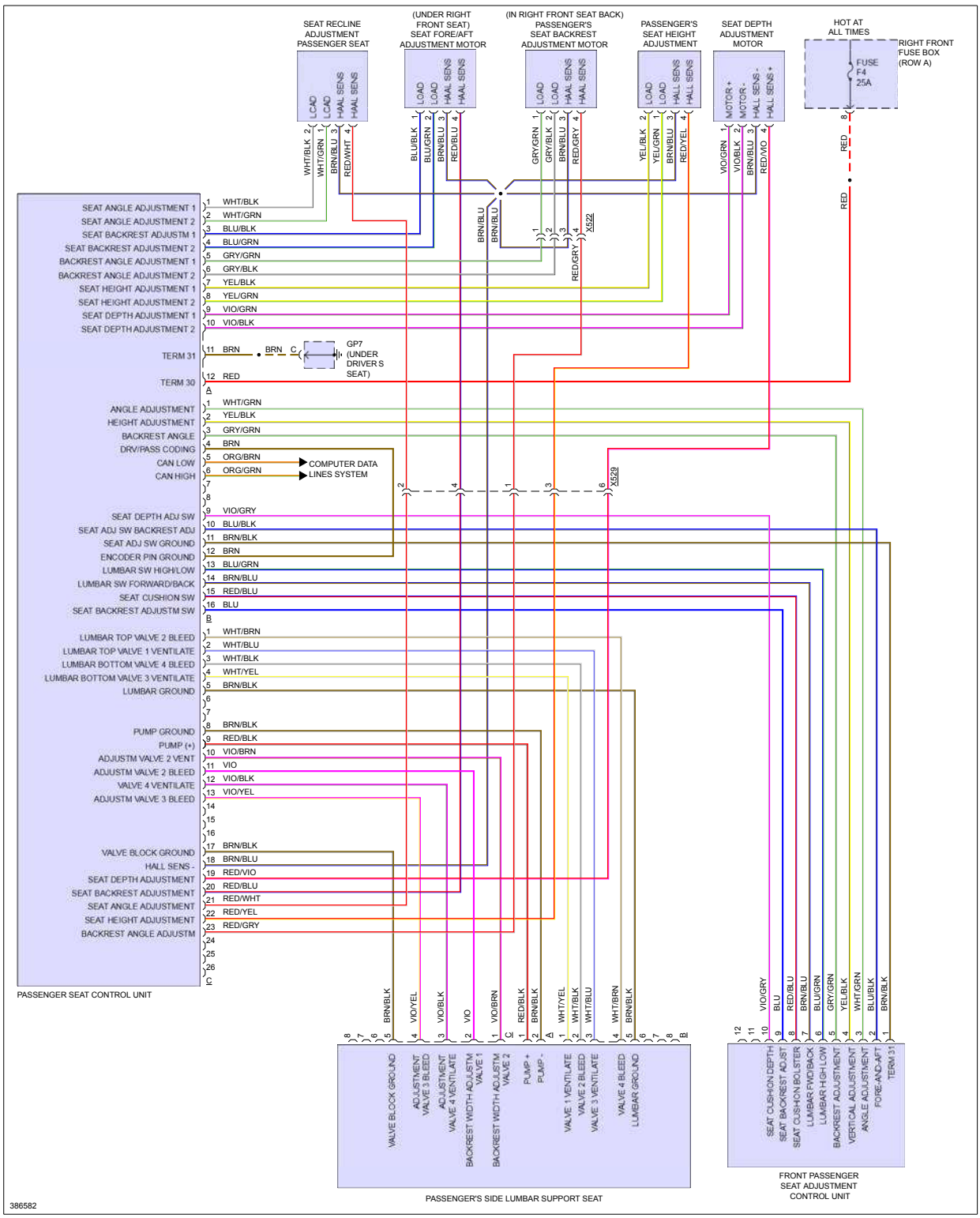

POWER TOP/SUNROOF

Fig 1: Convertible Top Circuit

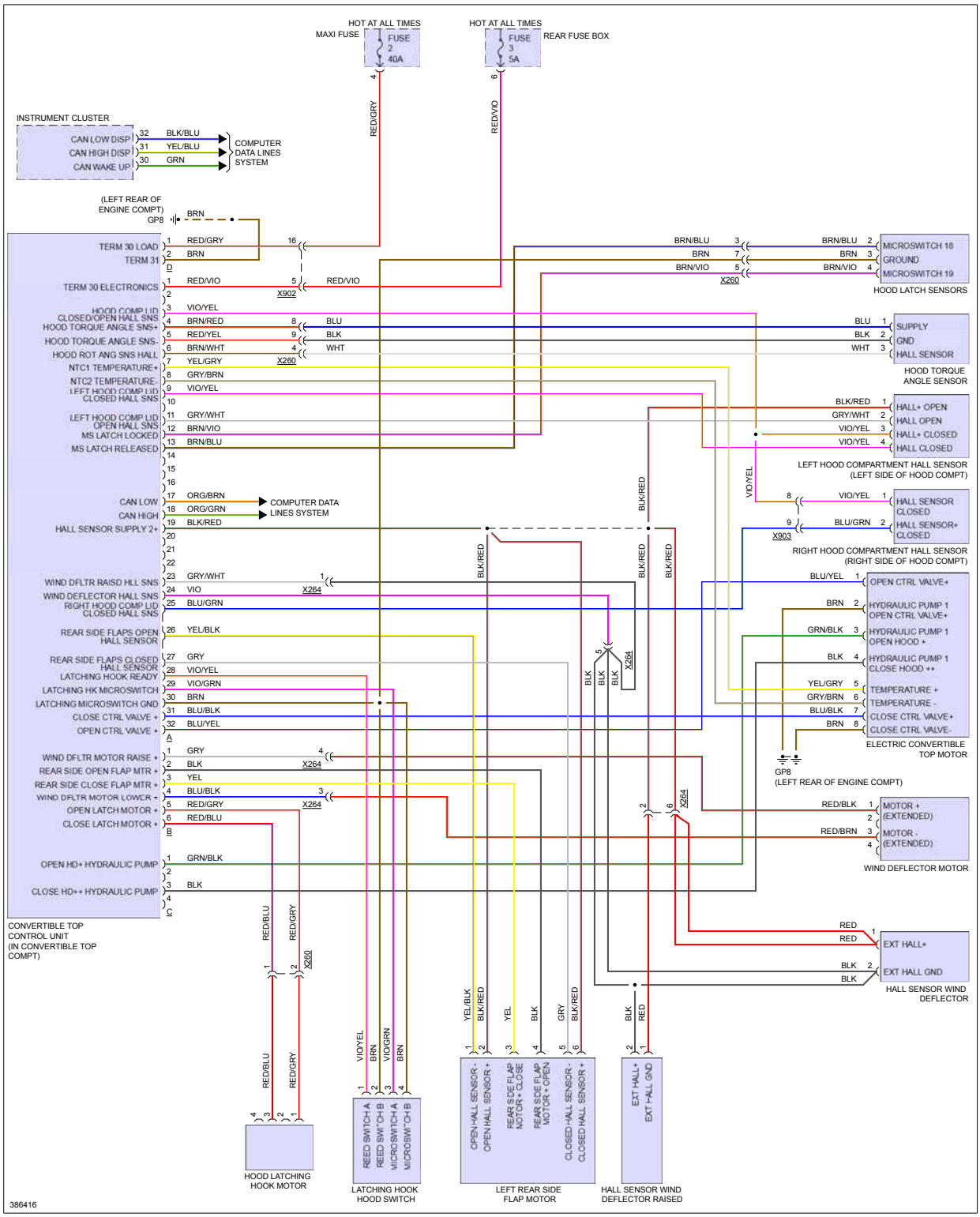

Fig 2: Sunroof Circuit

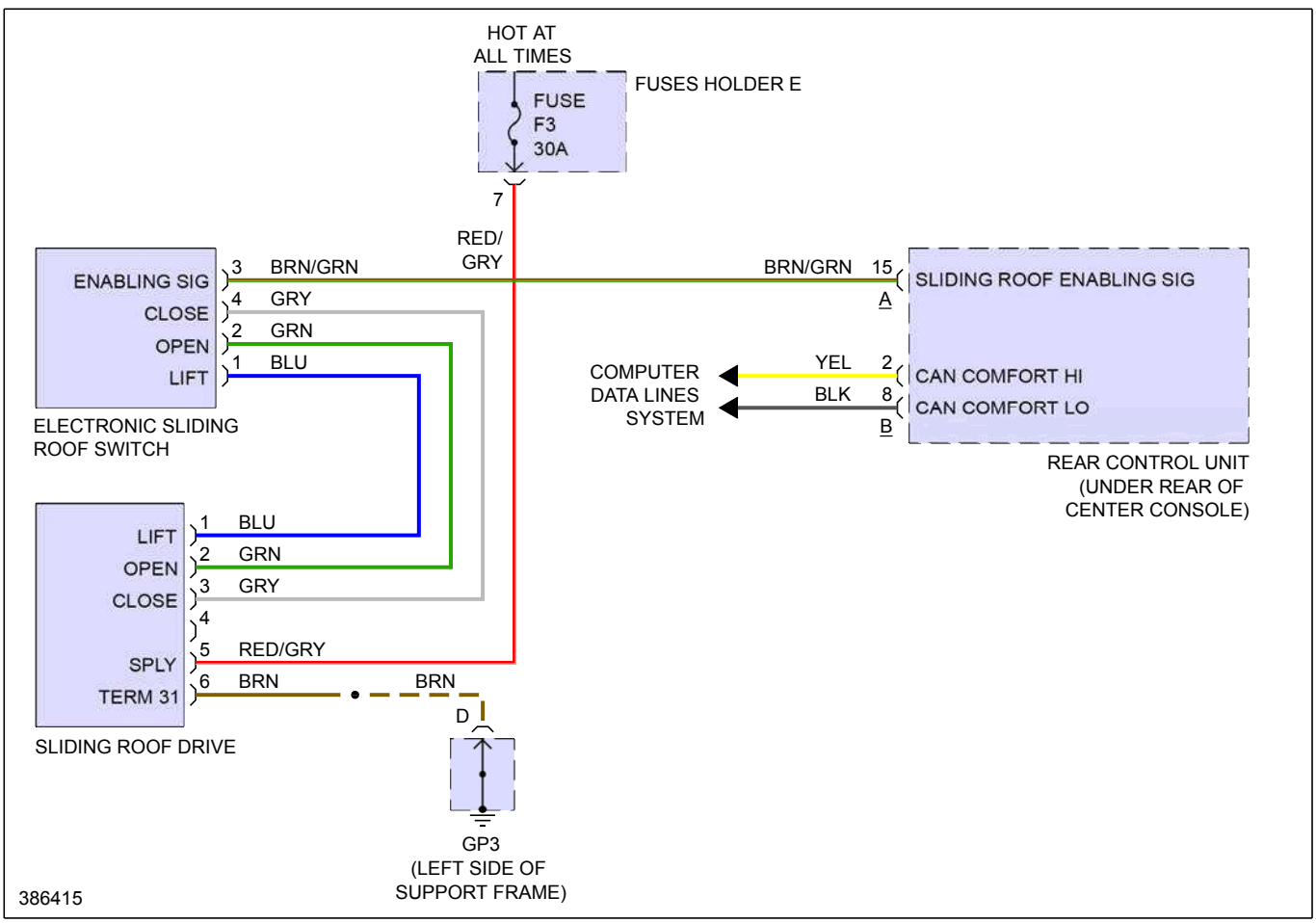

POWER WINDOWS

Fig 1: Power Windows Circuit, W/ Turbo

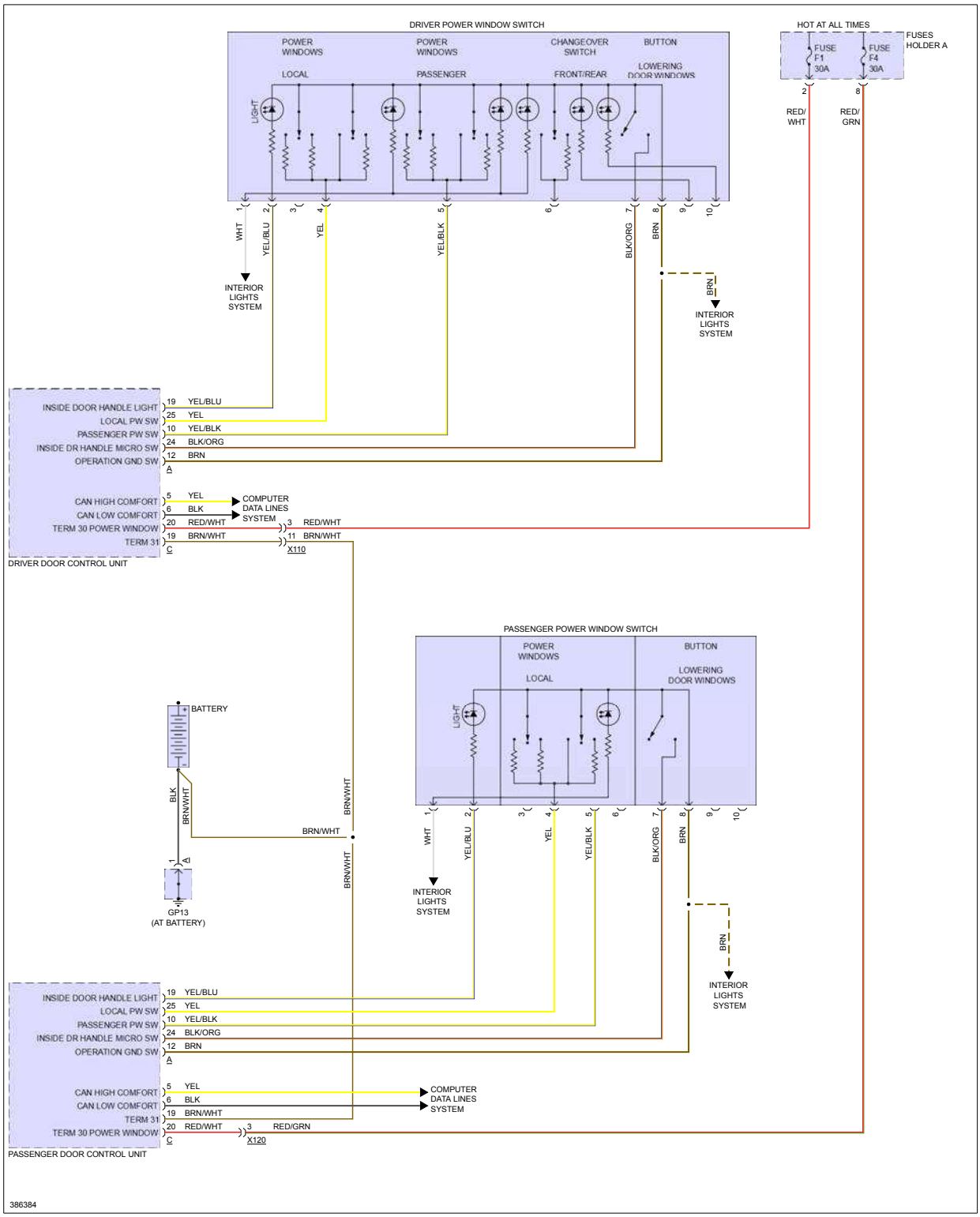

Fig 2: Power Windows Circuit, W/O Turbo

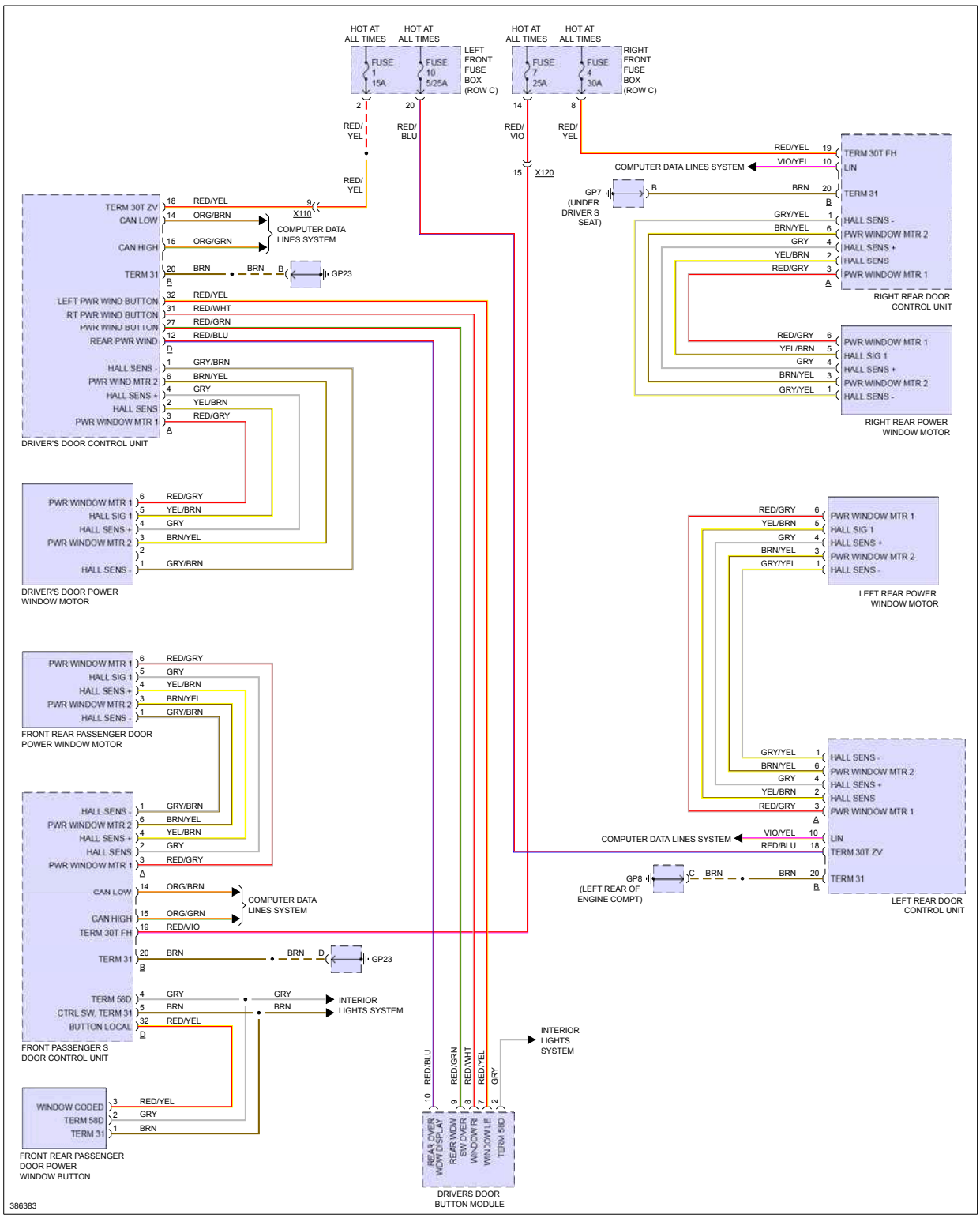

RADIO

Fig 1: Base Radio Circuit

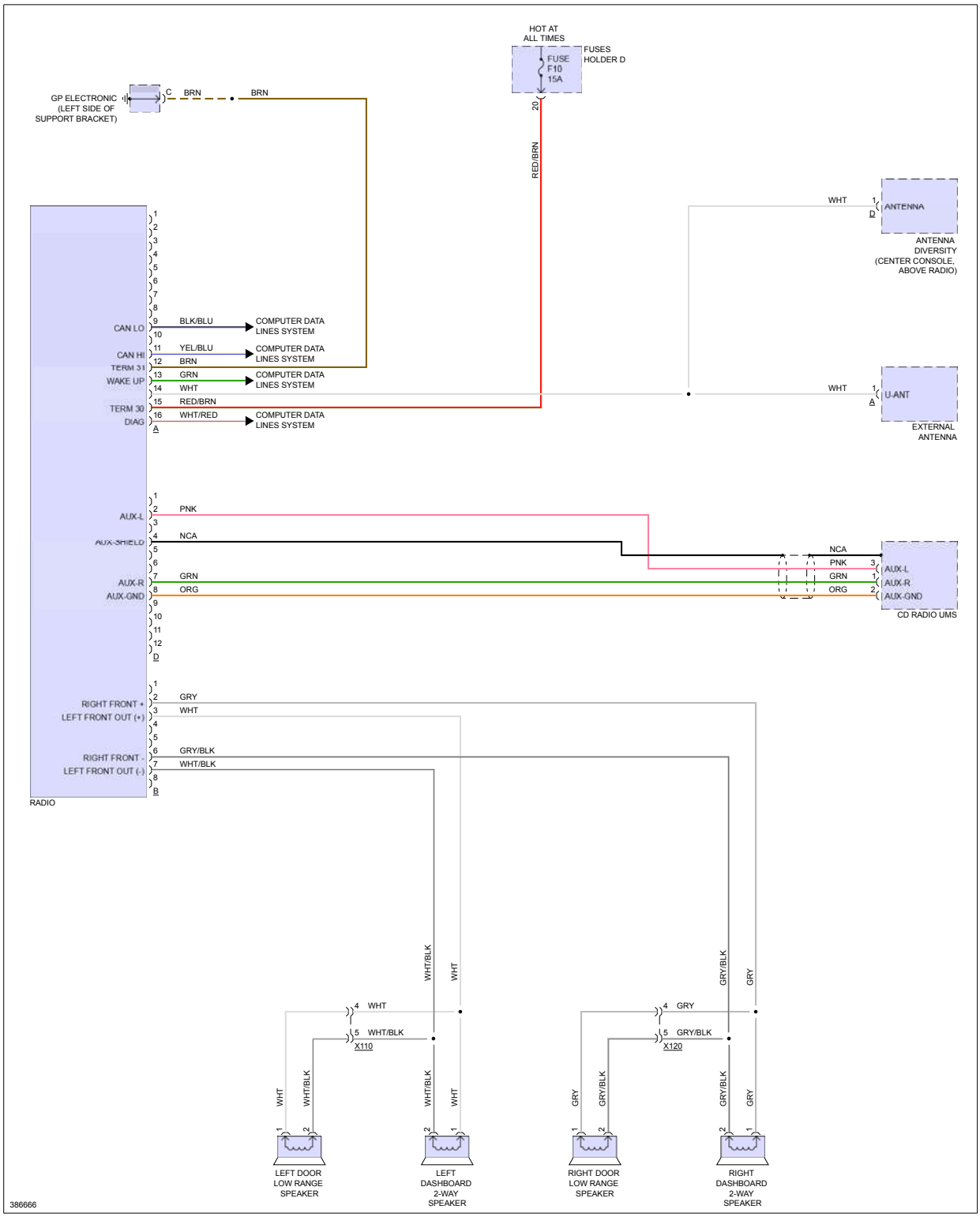

Fig 2: Optical WaveGuide Circuit

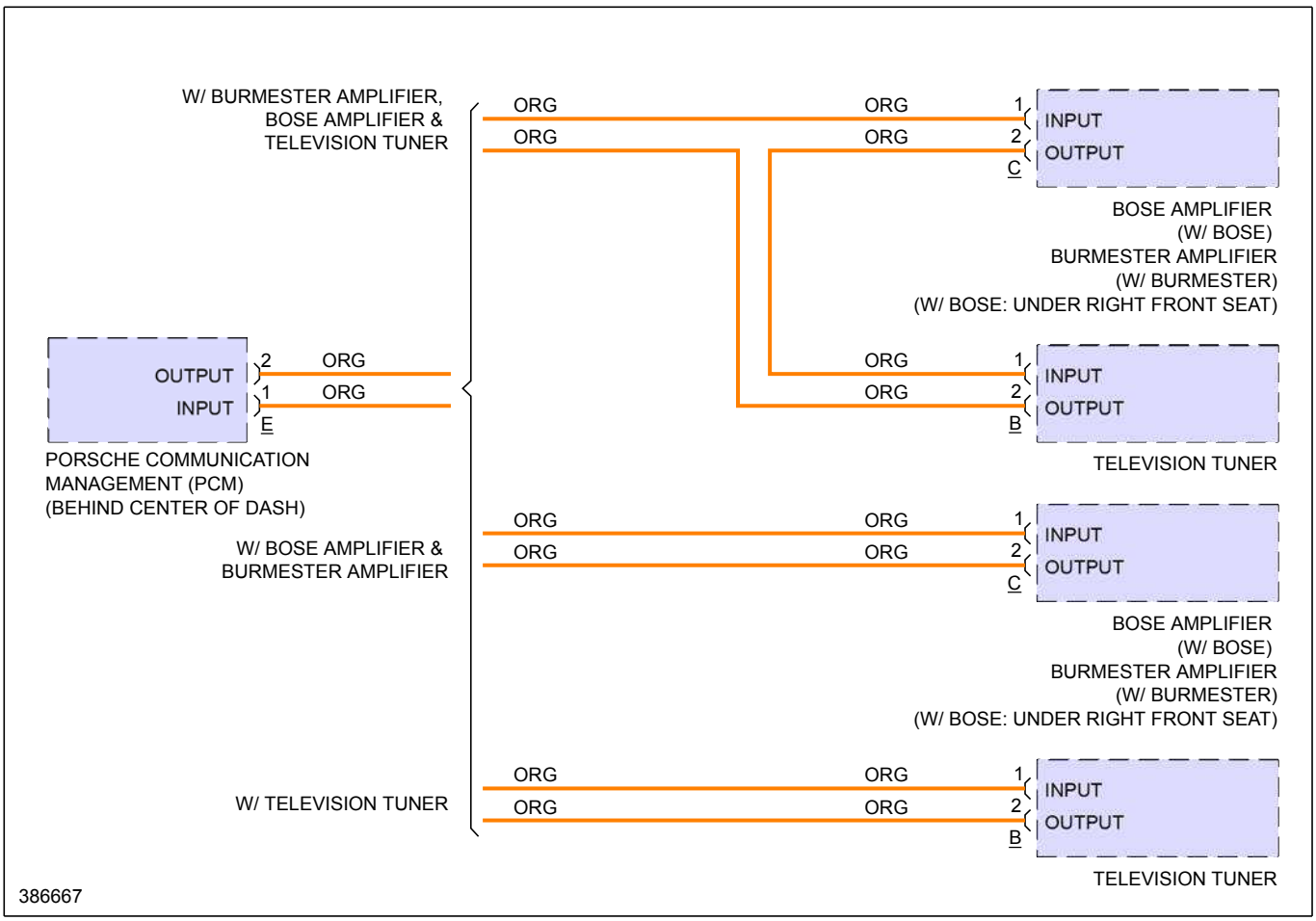

Fig 3: Premium Radio Circuit, Turbo W/ Bose (1 of 4)

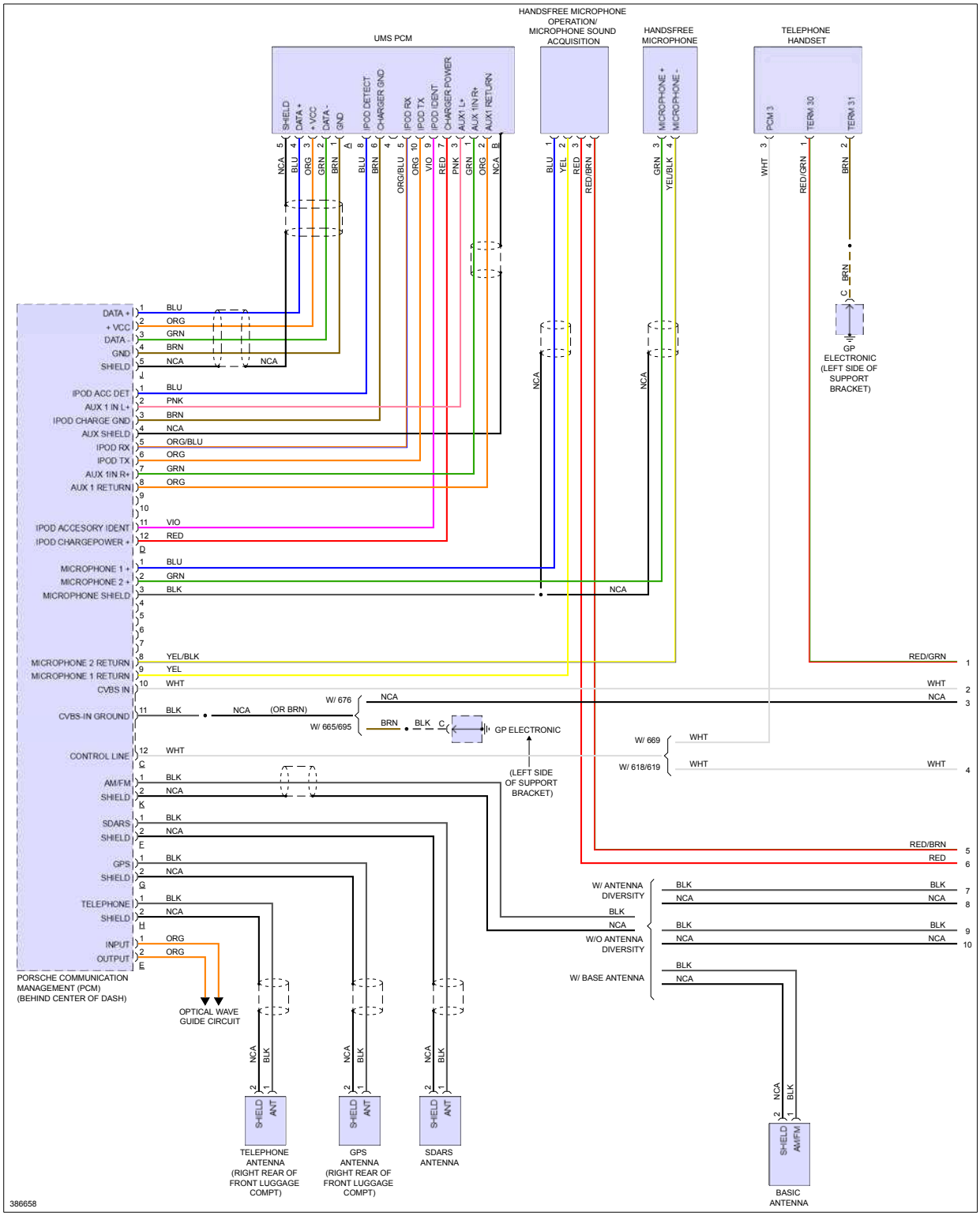

Fig 4: Premium Radio Circuit, Turbo W/ Bose (2 of 4)

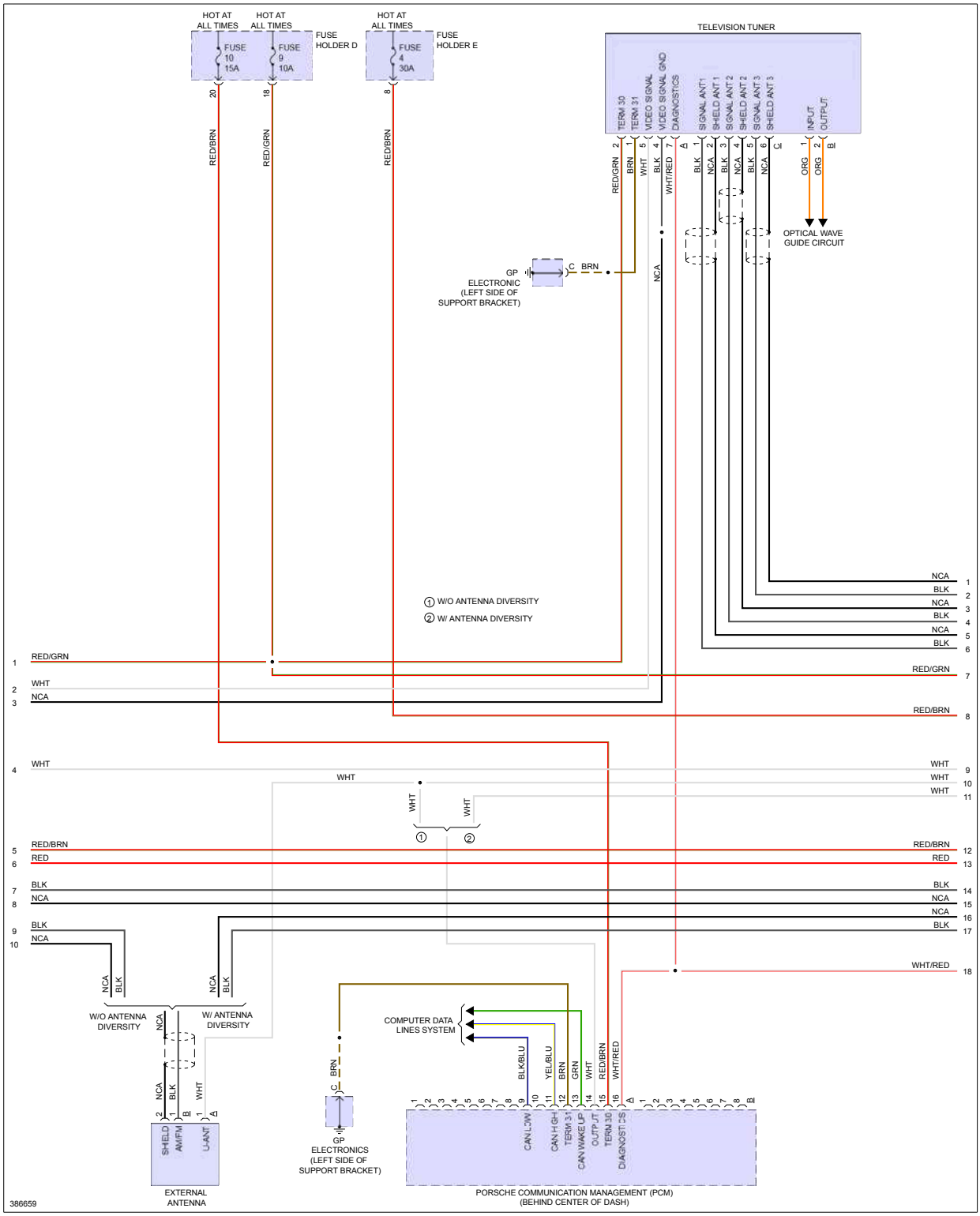

Fig 5: Premium Radio Circuit, Turbo W/ Bose (3 of 4)

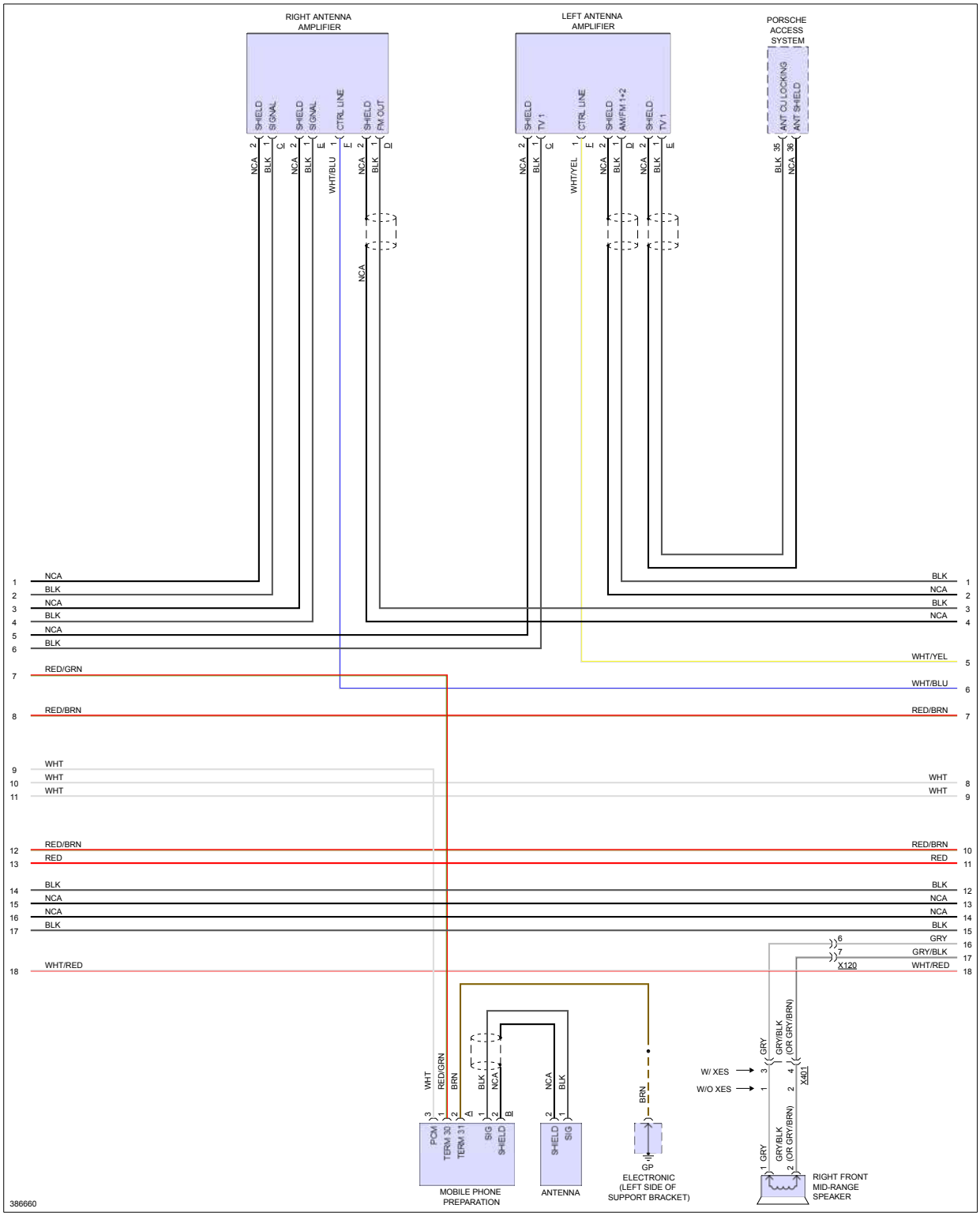

Fig 6: Premium Radio Circuit, Turbo W/ Bose (4 of 4)

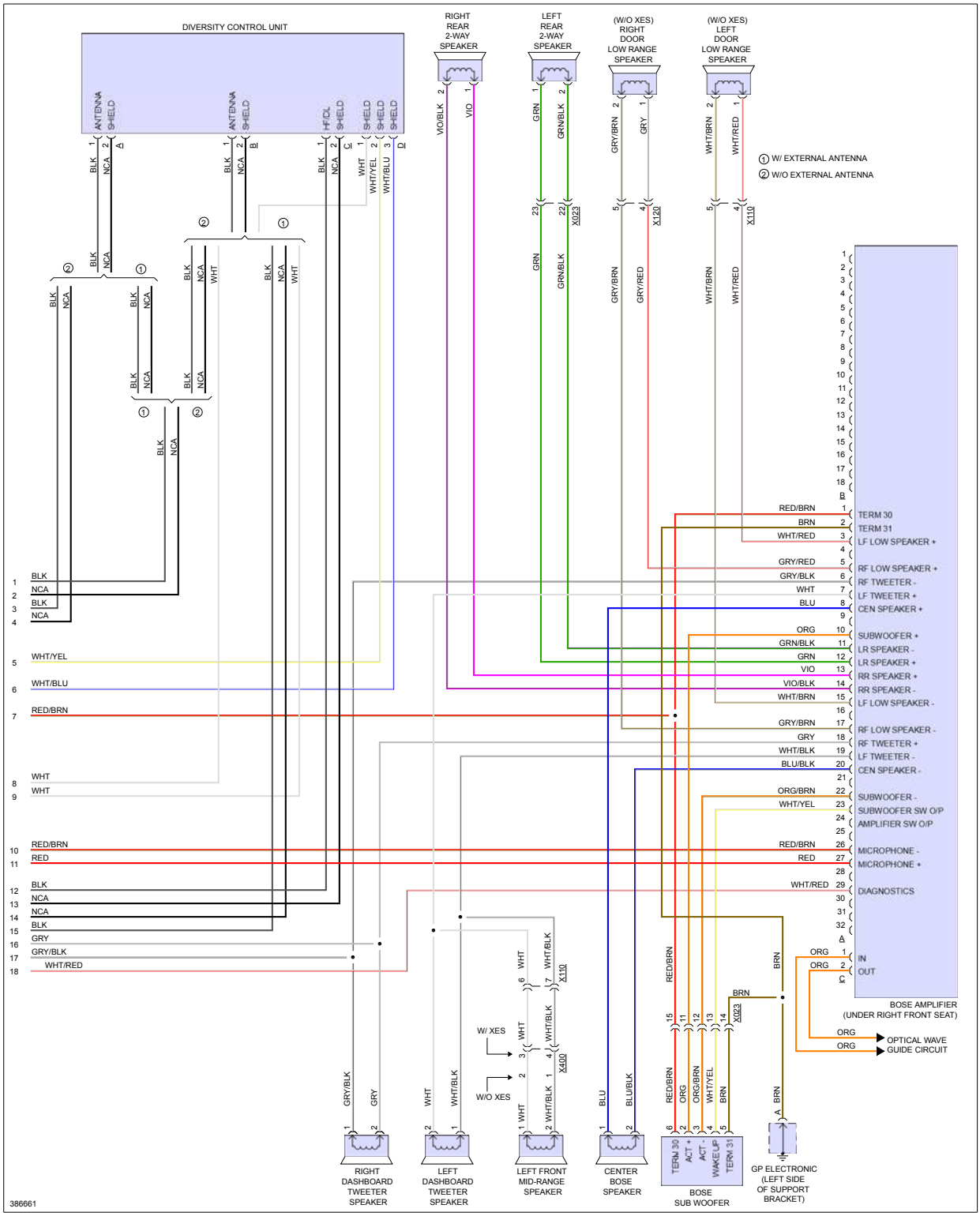

Fig 7: Premium Radio Circuit, Turbo W/O Bose (1 of 4)

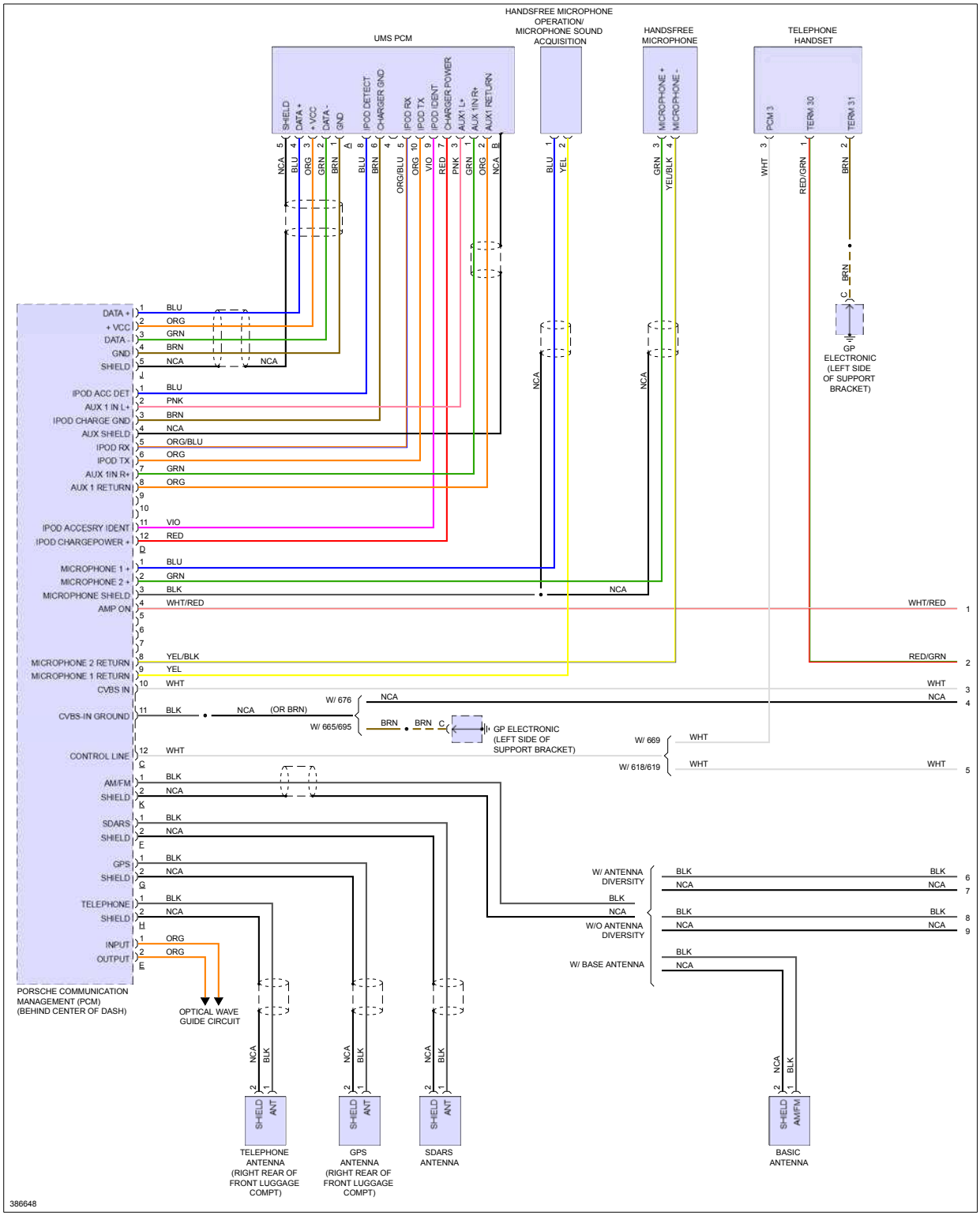

Fig 8: Premium Radio Circuit, Turbo W/O Bose (2 of 4)

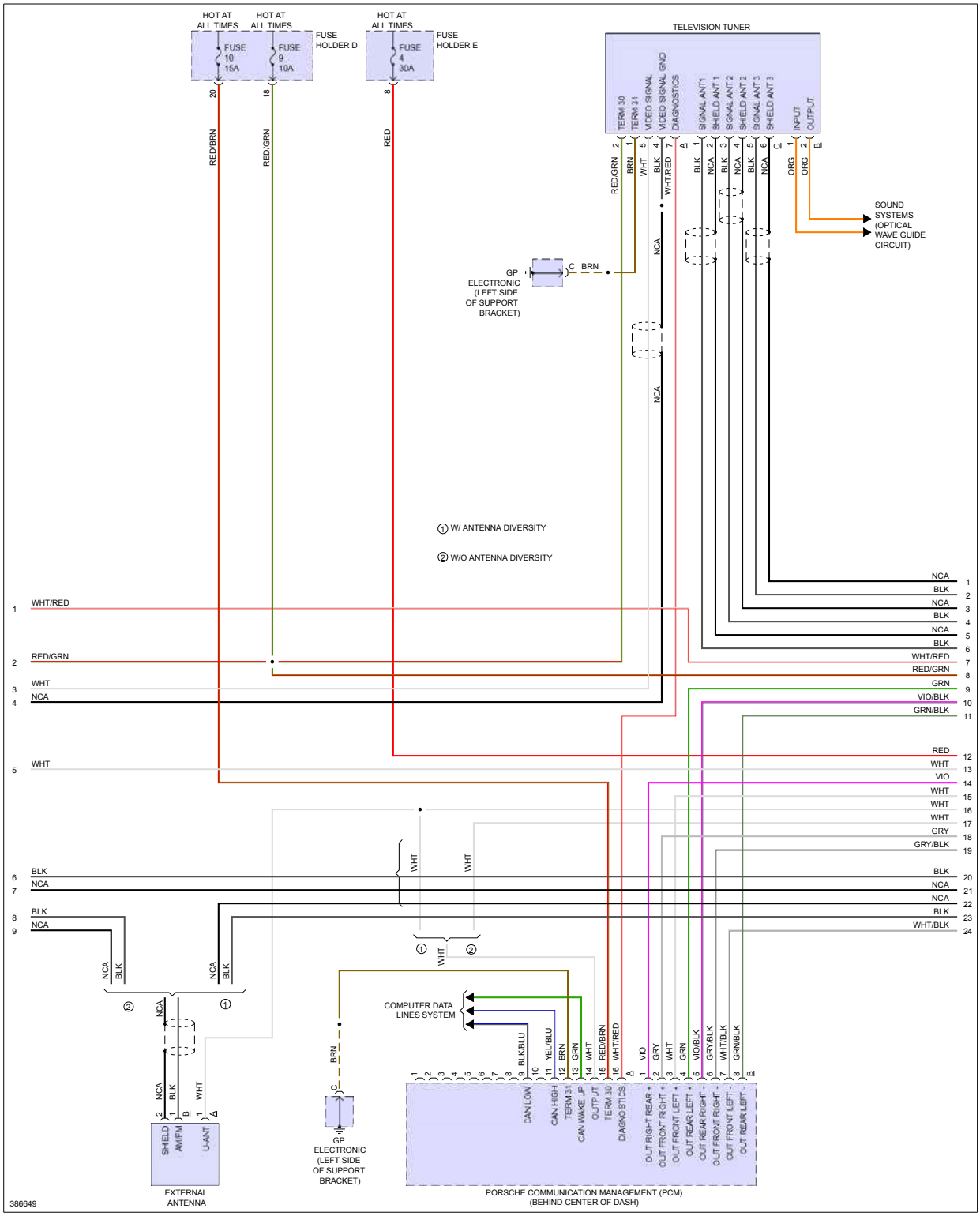

Fig 9: Premium Radio Circuit, Turbo W/O Bose (3 of 4)

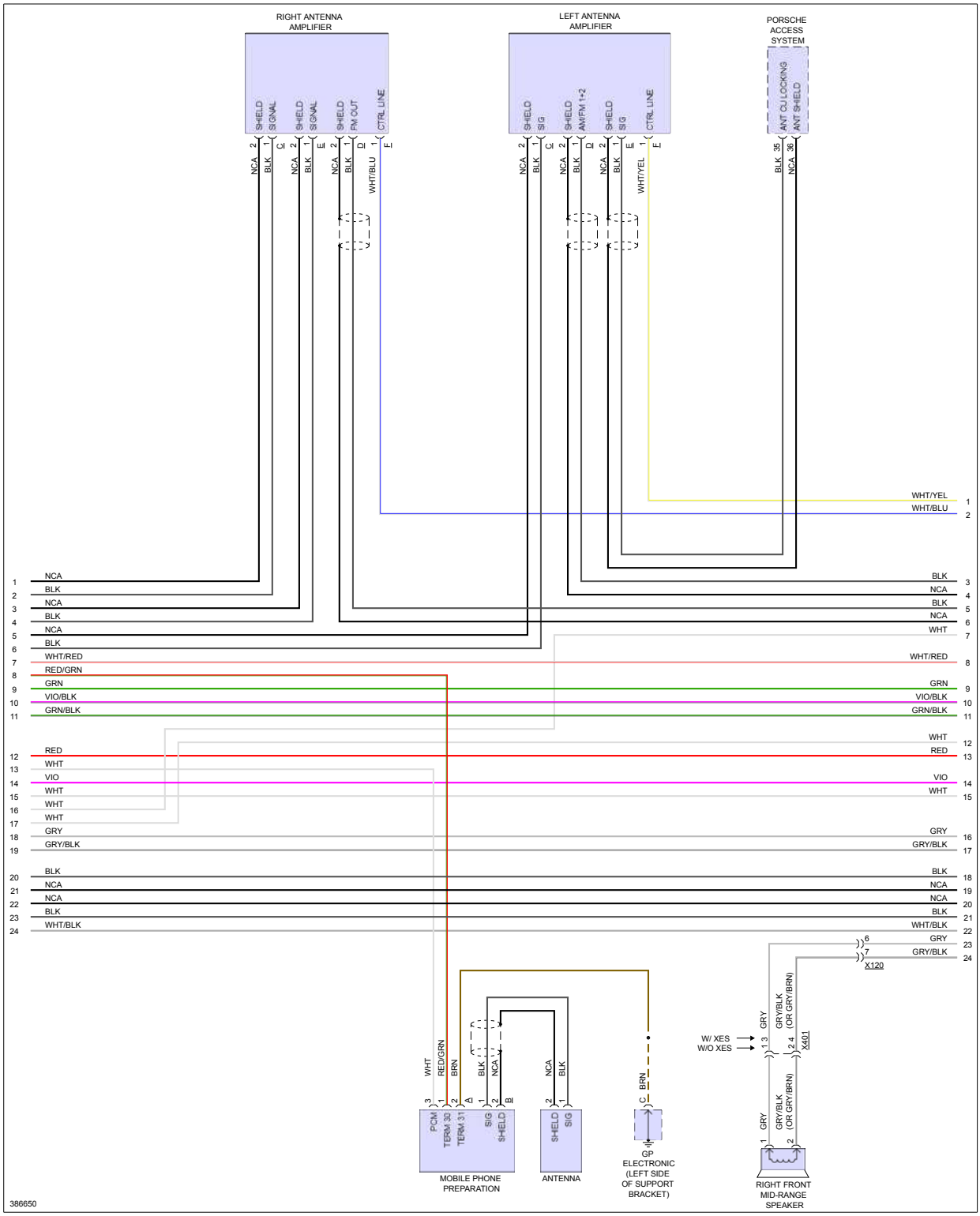

Fig 10: Premium Radio Circuit, Turbo W/O Bose (4 of 4)

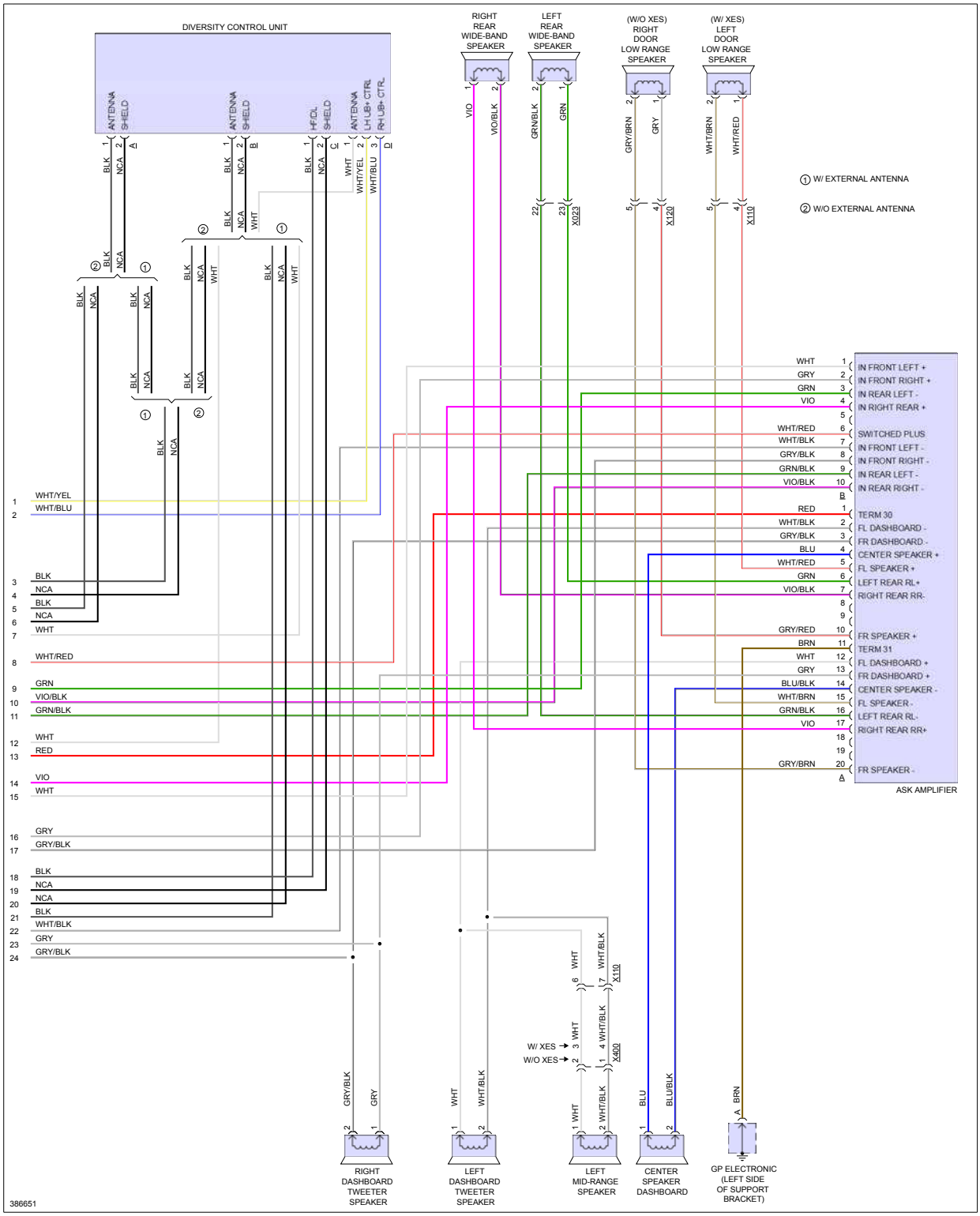

Fig 11: Premium Radio Circuit, W/ Burmester (1 of 4)

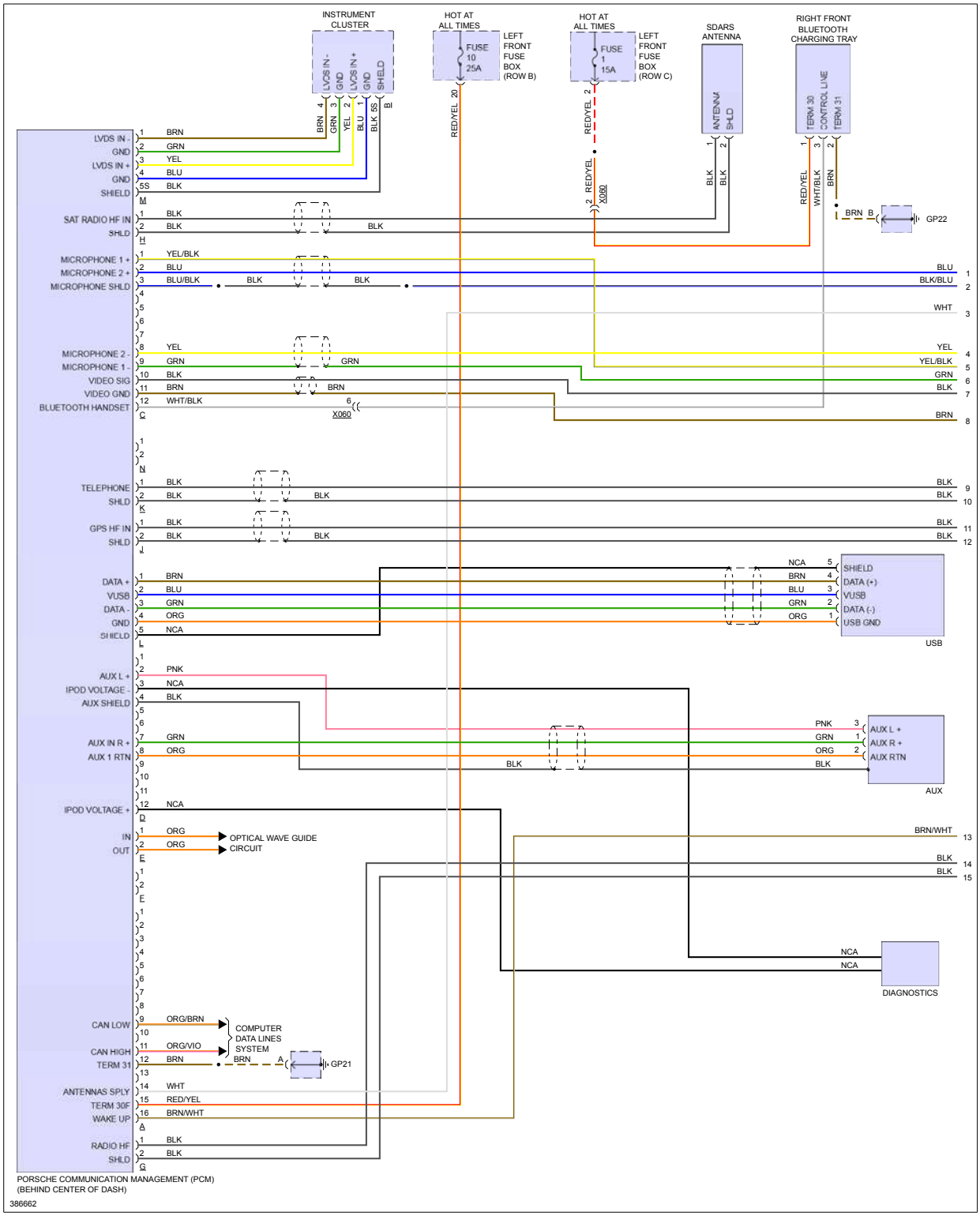

Fig 12: Premium Radio Circuit, W/ Burmester (2 of 4)

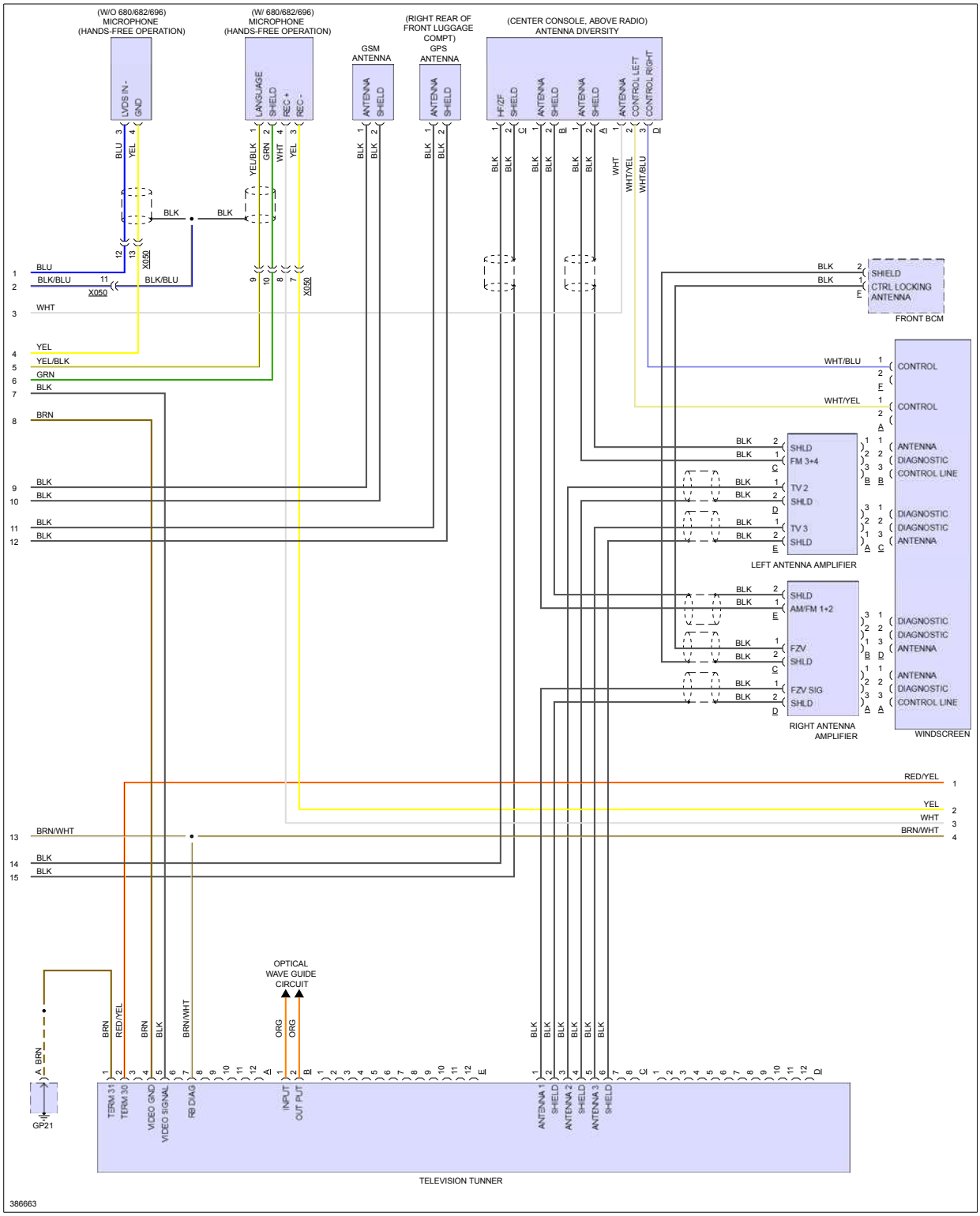

Fig 13: Premium Radio Circuit, W/ Burmester (3 of 4)

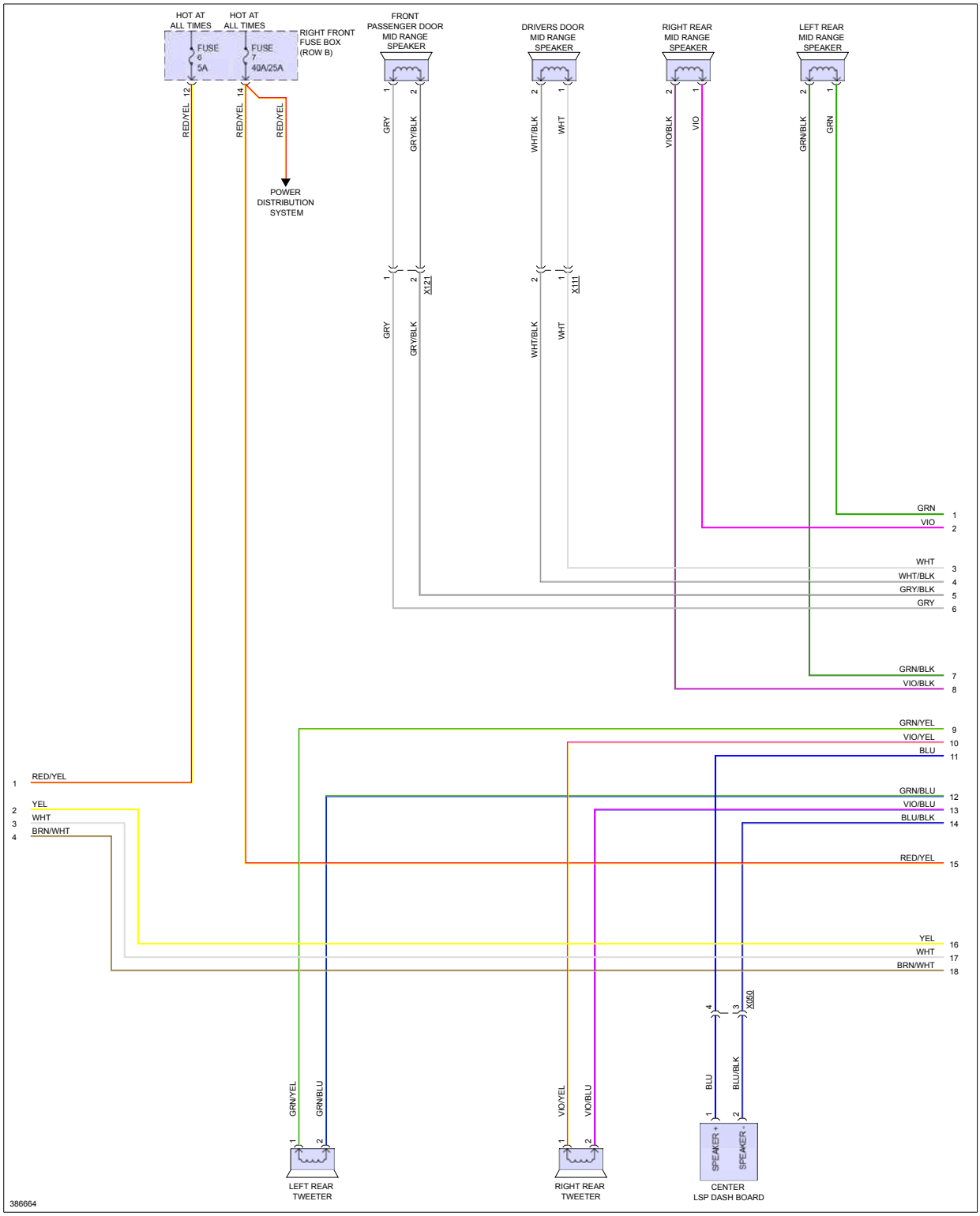

Fig 14: Premium Radio Circuit, W/ Burmester (4 of 4)

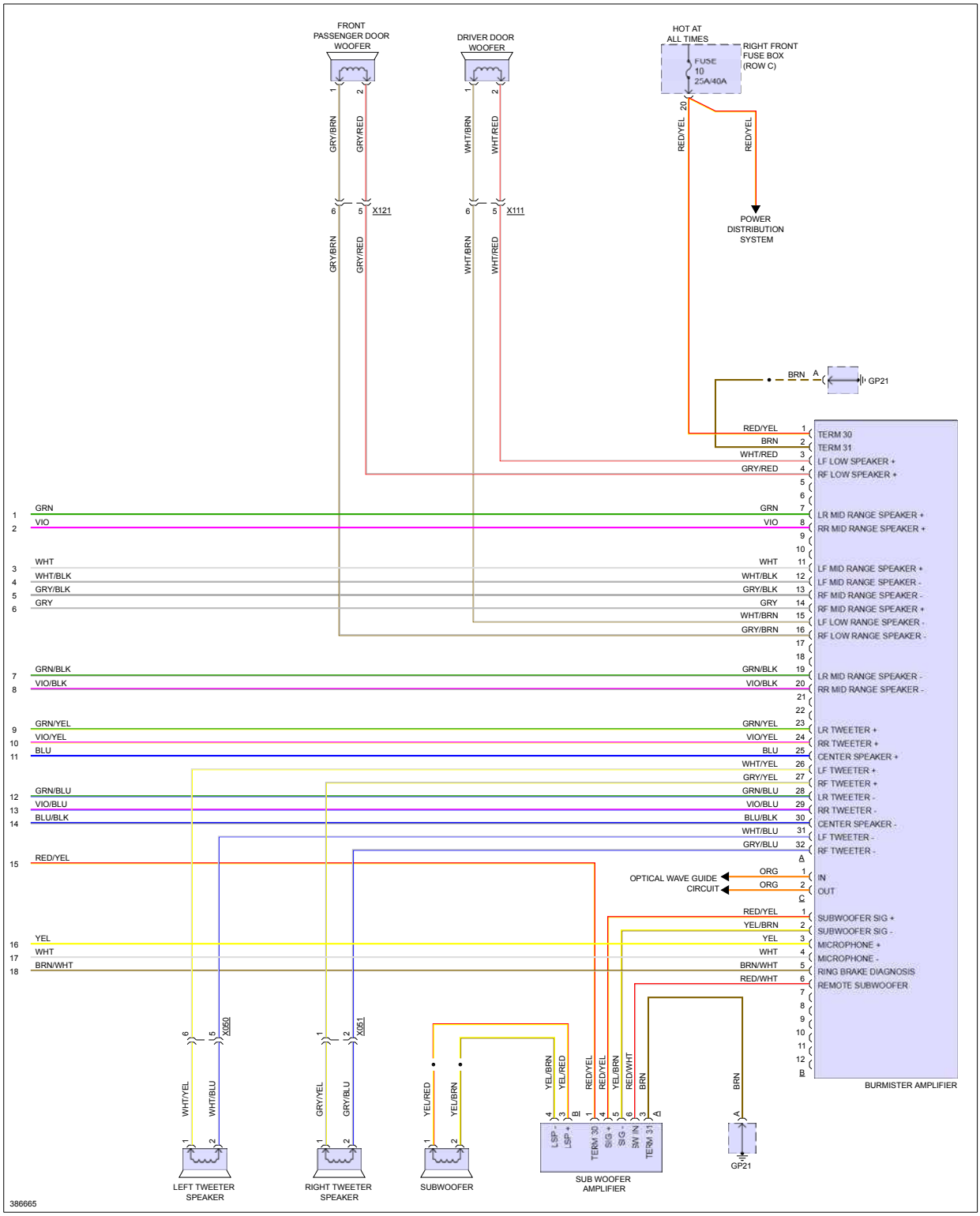

Fig 15: Premium Radio Circuit, W/O Turbo W/ Bose (1 of 3)

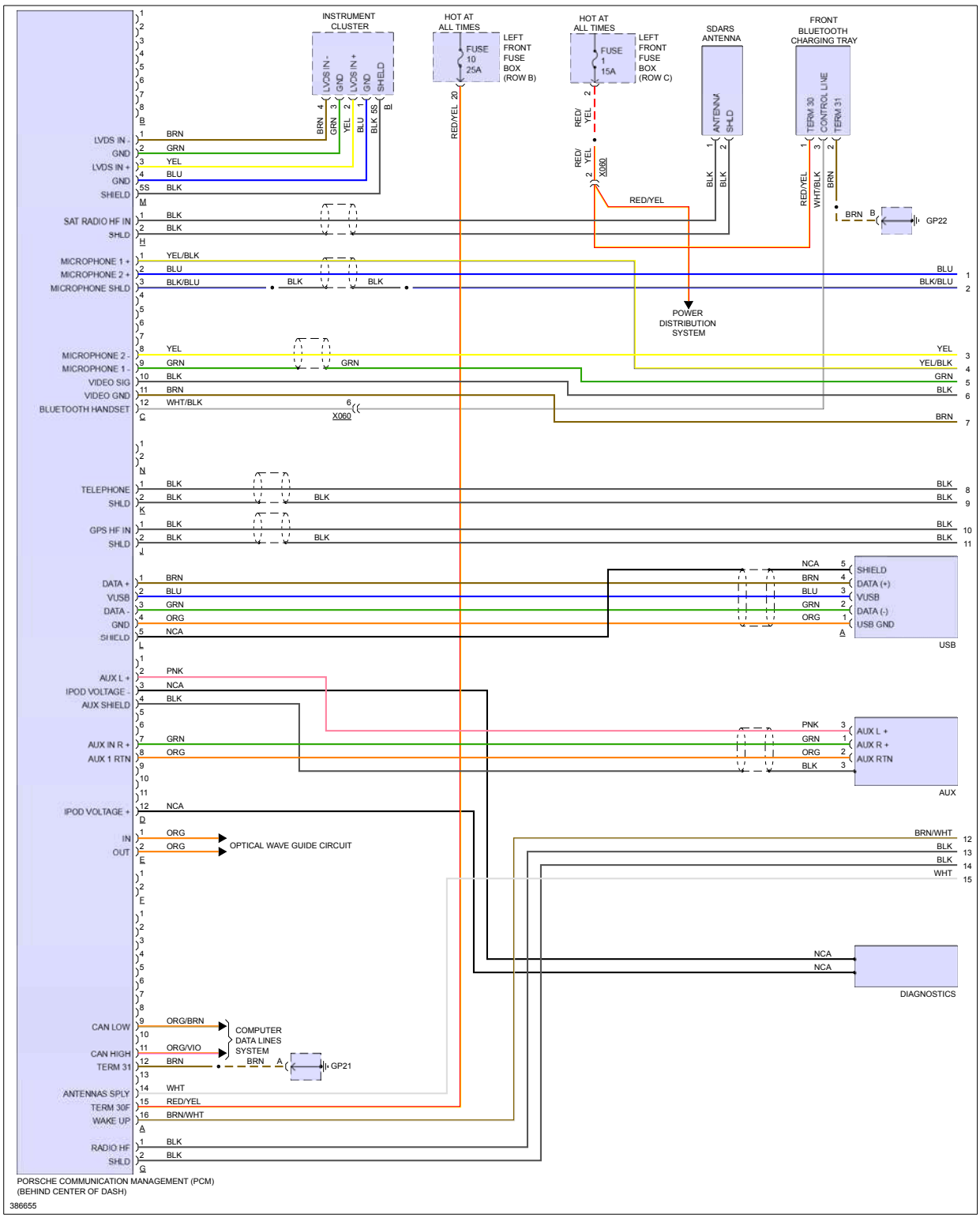

Fig 16: Premium Radio Circuit, W/O Turbo W/ Bose (2 of 3)

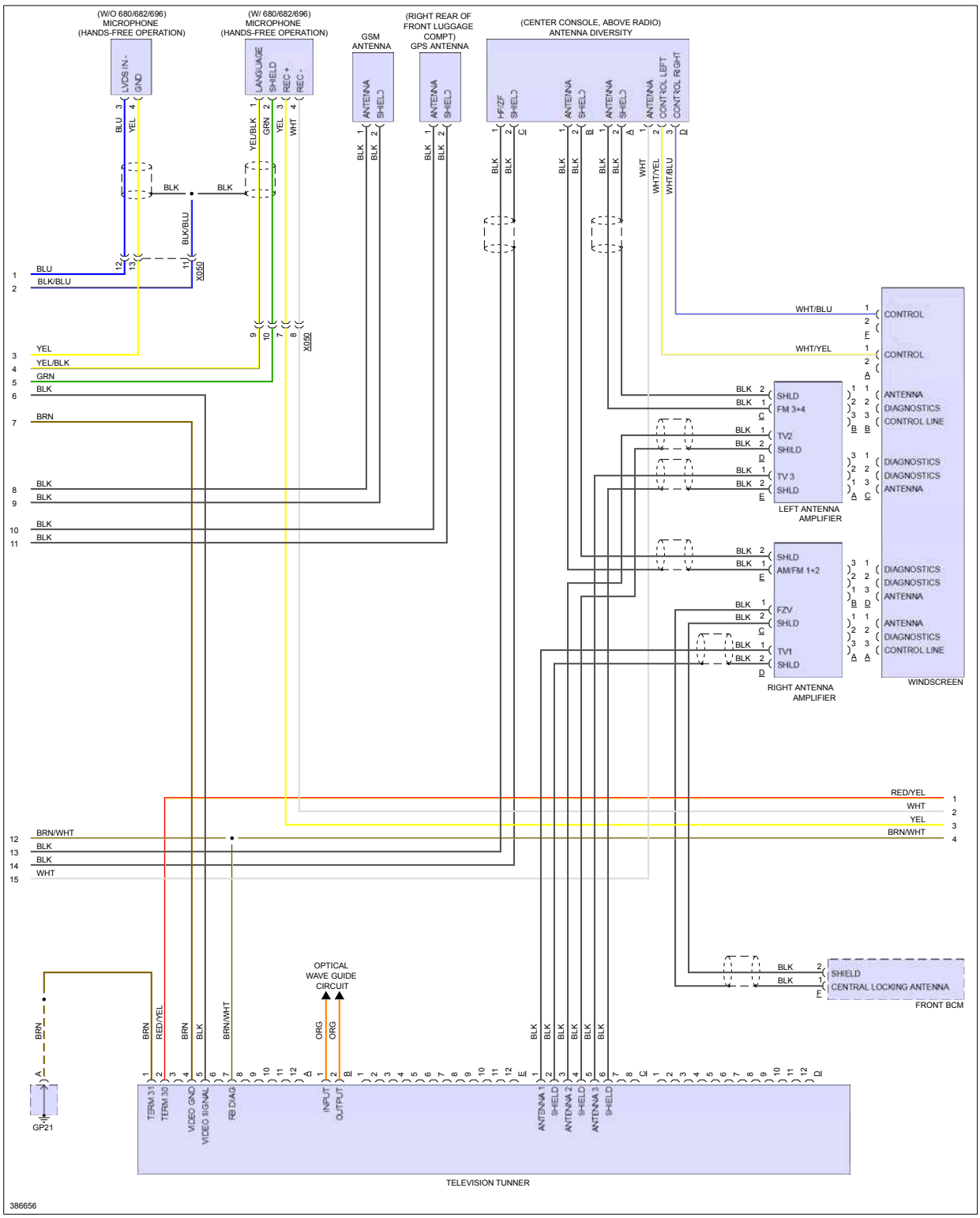

Fig 17: Premium Radio Circuit, W/O Turbo W/ Bose (3 of 3)

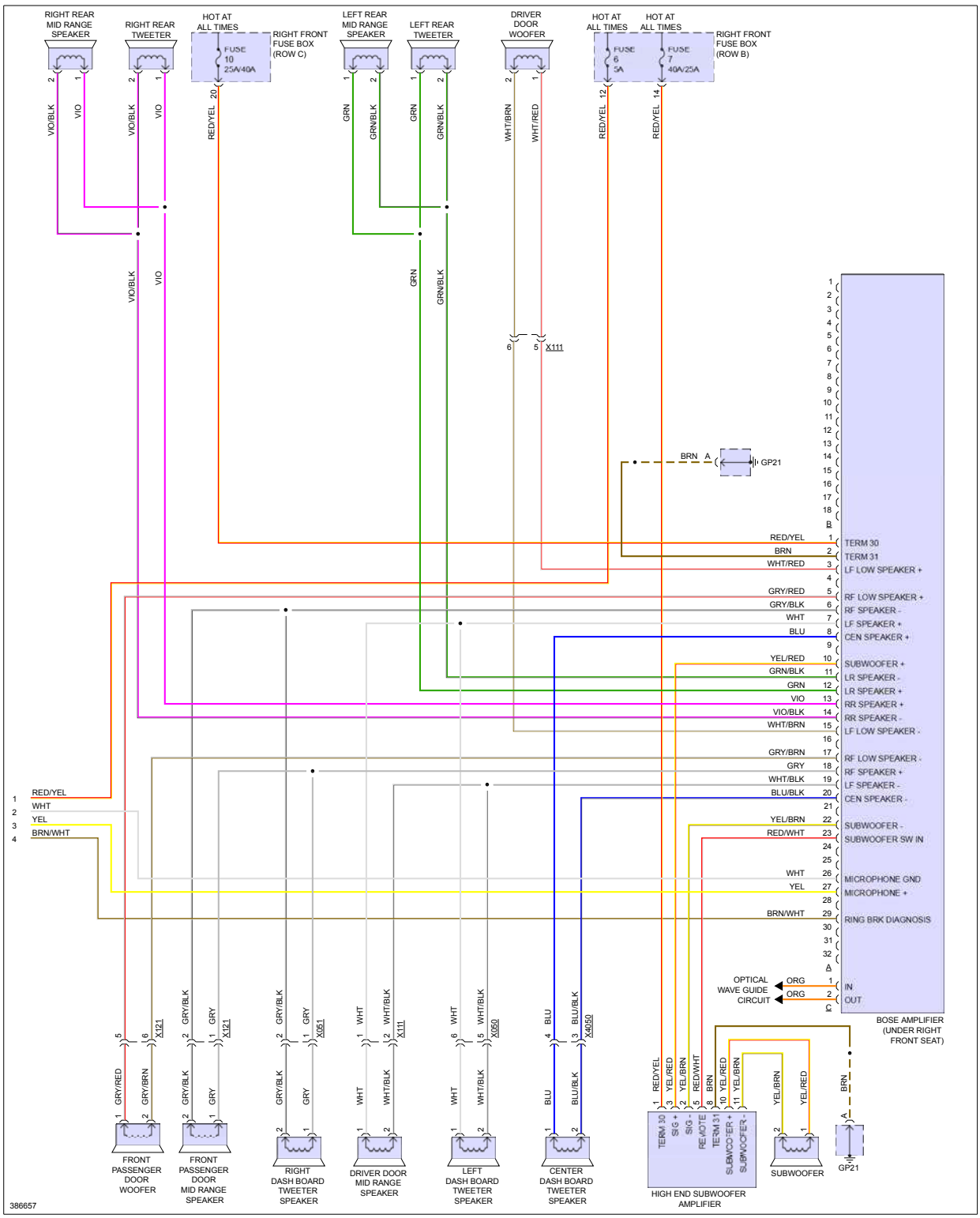

Fig 18: Premium Radio Circuit, W/O Turbo W/O Bose (1 of 3)

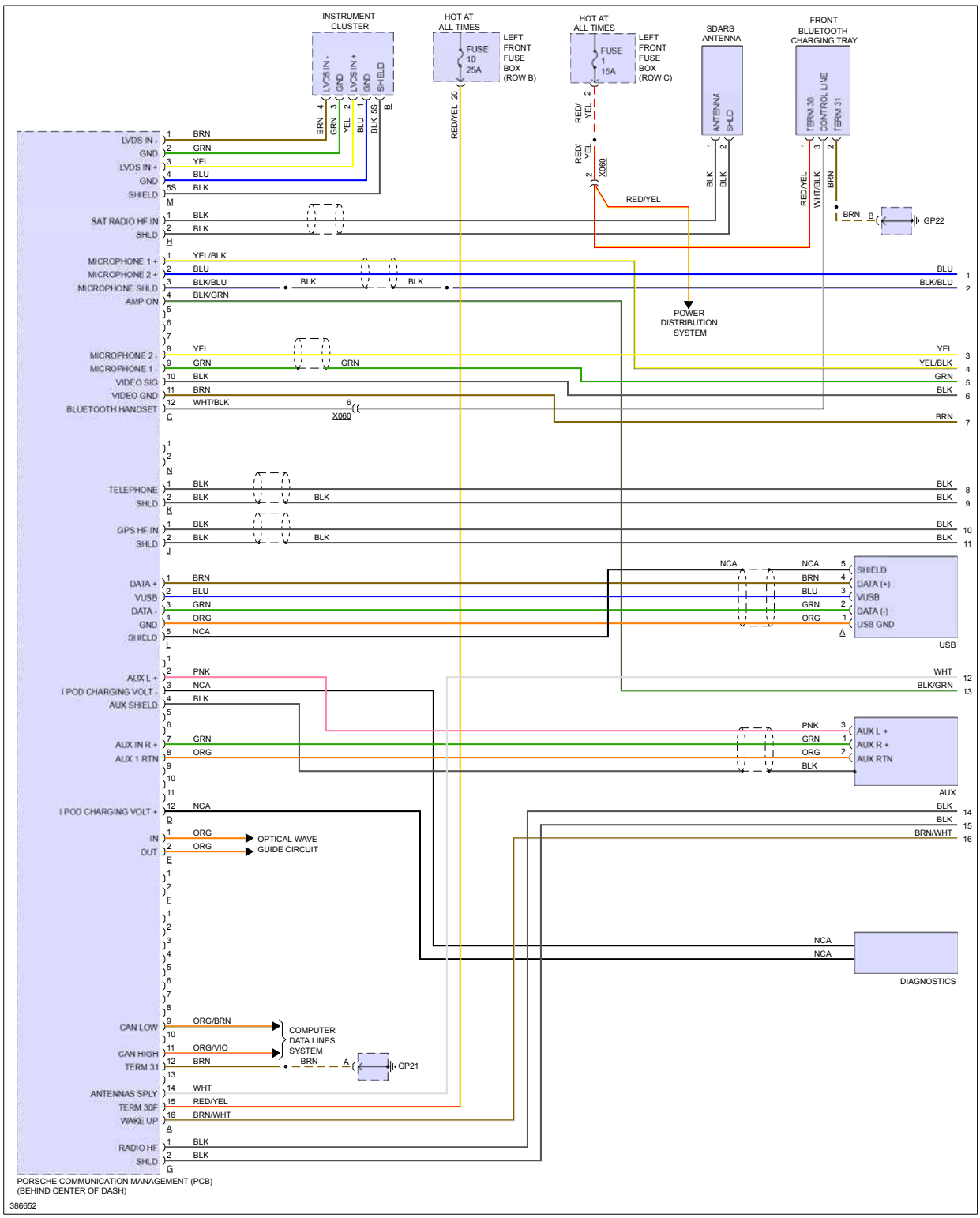

Fig 19: Premium Radio Circuit, W/O Turbo W/O Bose (2 of 3)

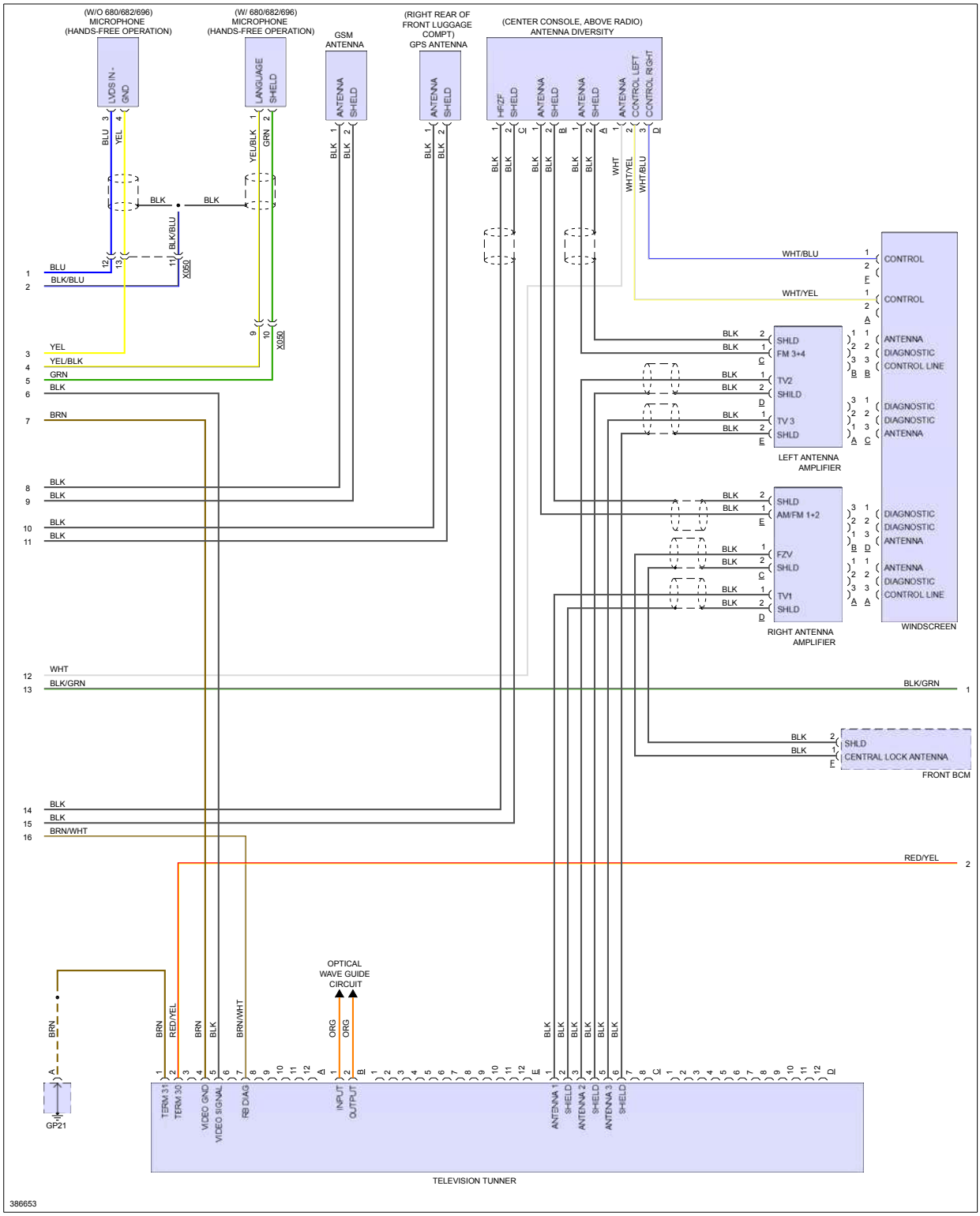

Fig 20: Premium Radio Circuit, W/O Turbo W/O Bose (3 of 3)

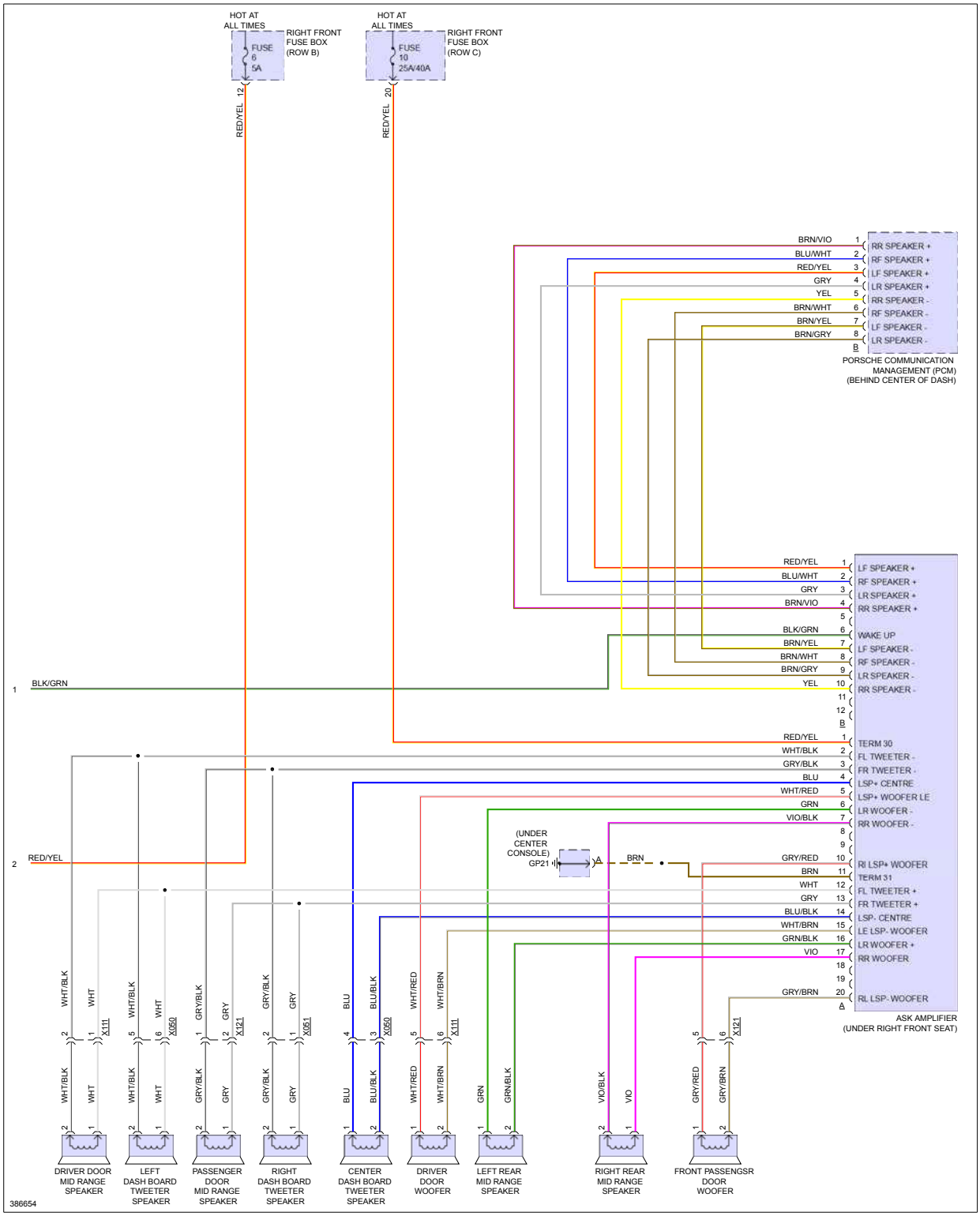

SHIFT INTERLOCK

Fig 1: Electronic Parking Brake Circuit, W/O Turbo

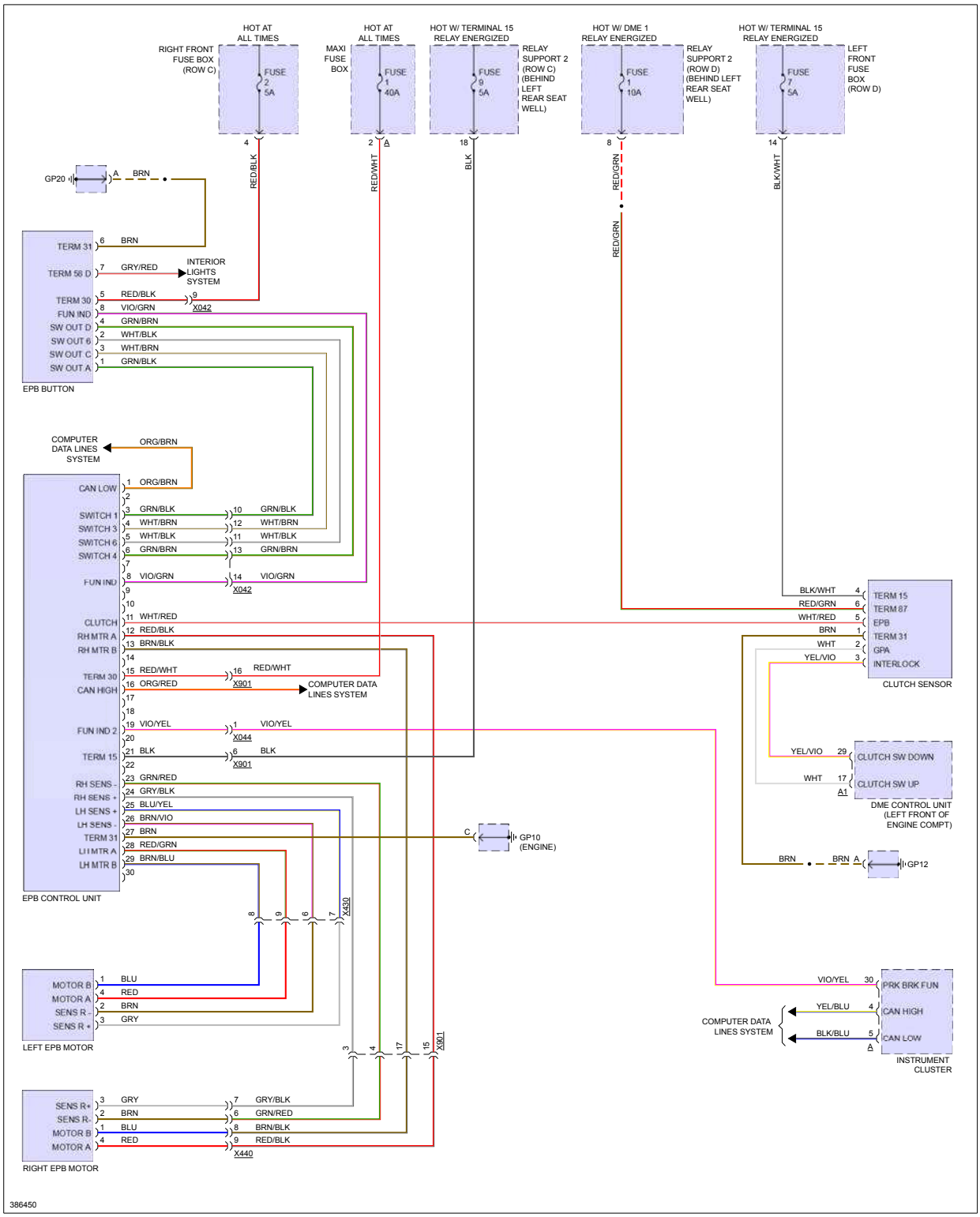

Fig 2: Shift Interlock Circuit, W/ Turbo

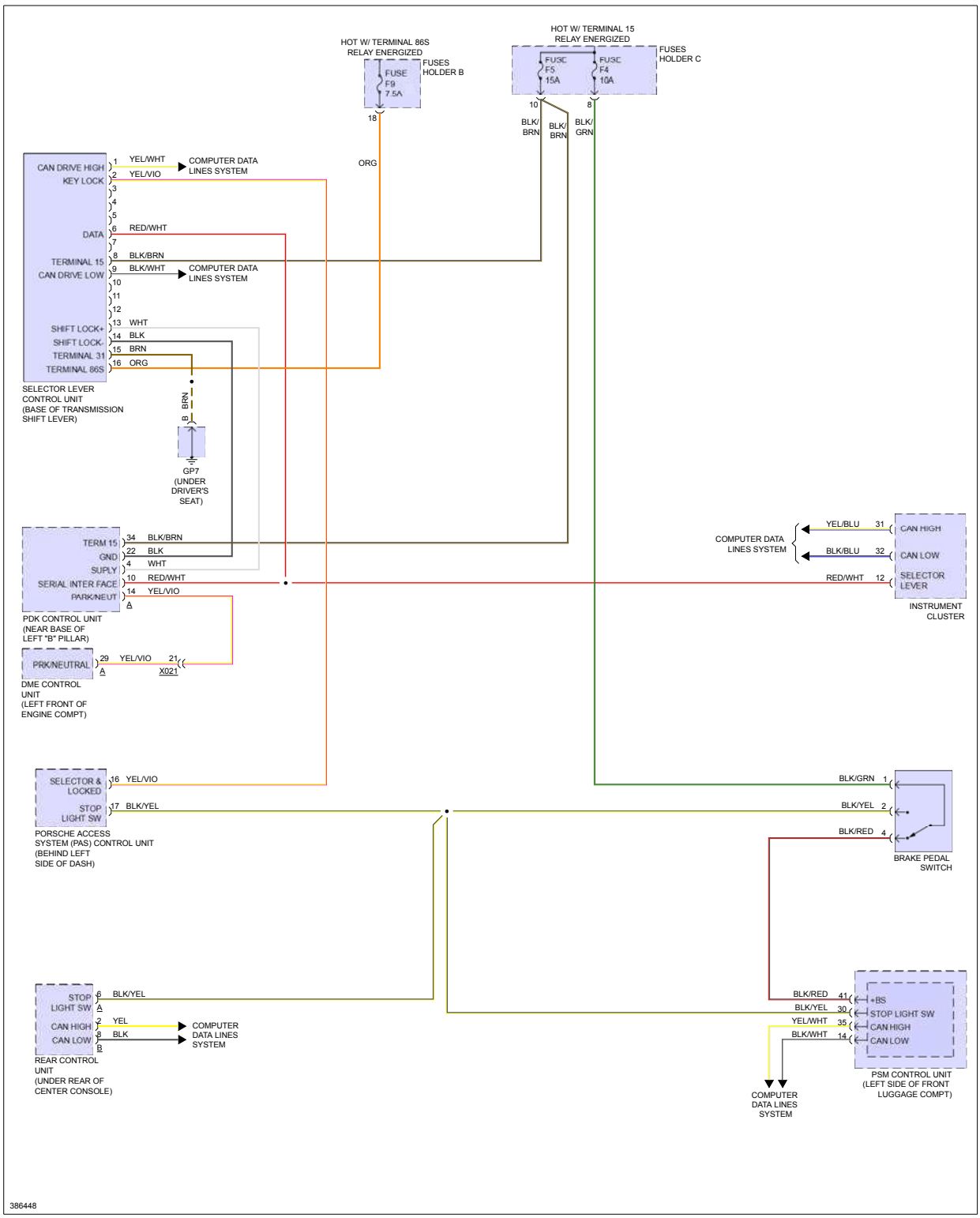

Fig 3: Shift Interlock Circuit, W/O Turbo

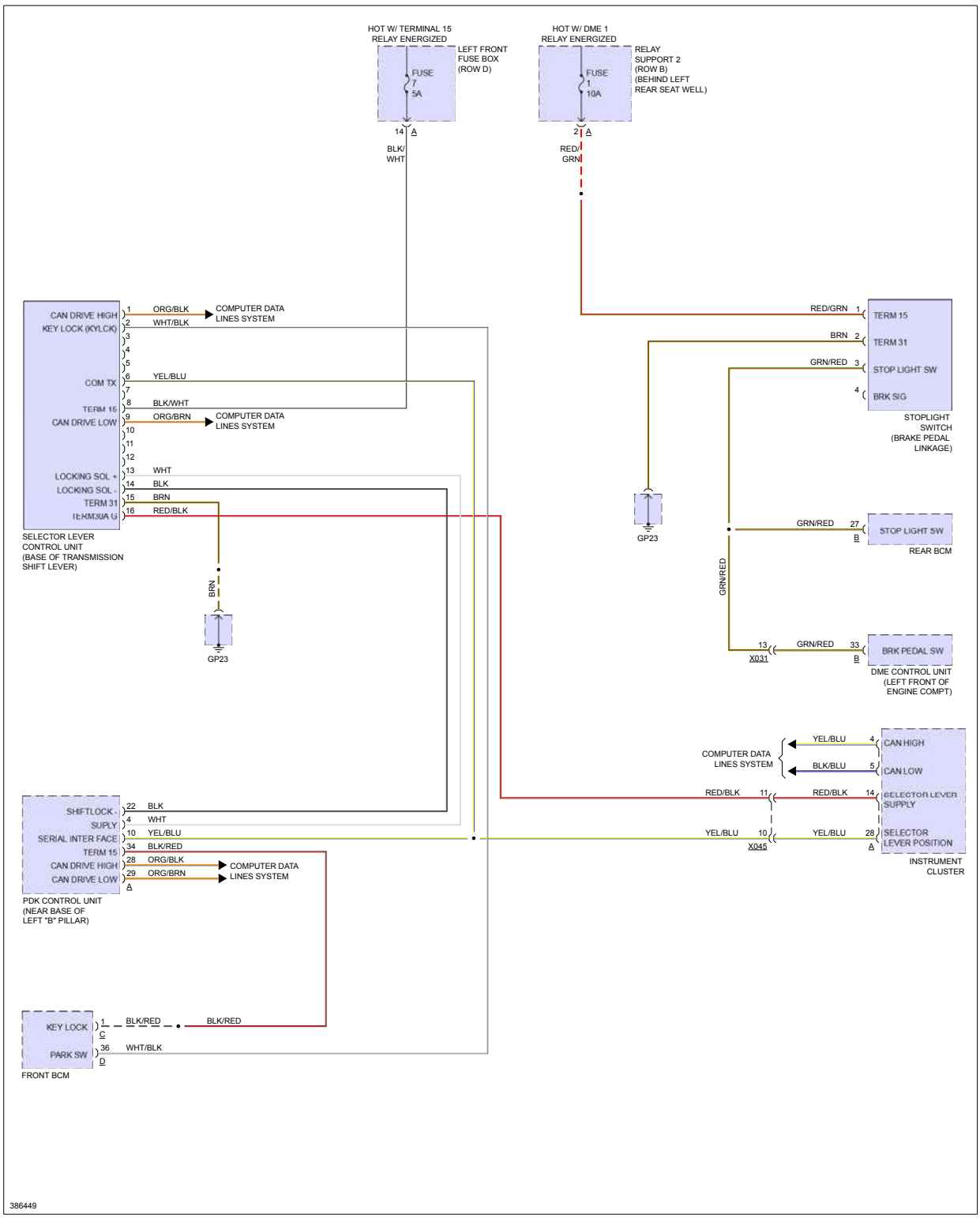

STARTING/CHARGING > 3.4L

Fig 1: 3.4L, Charging Circuit

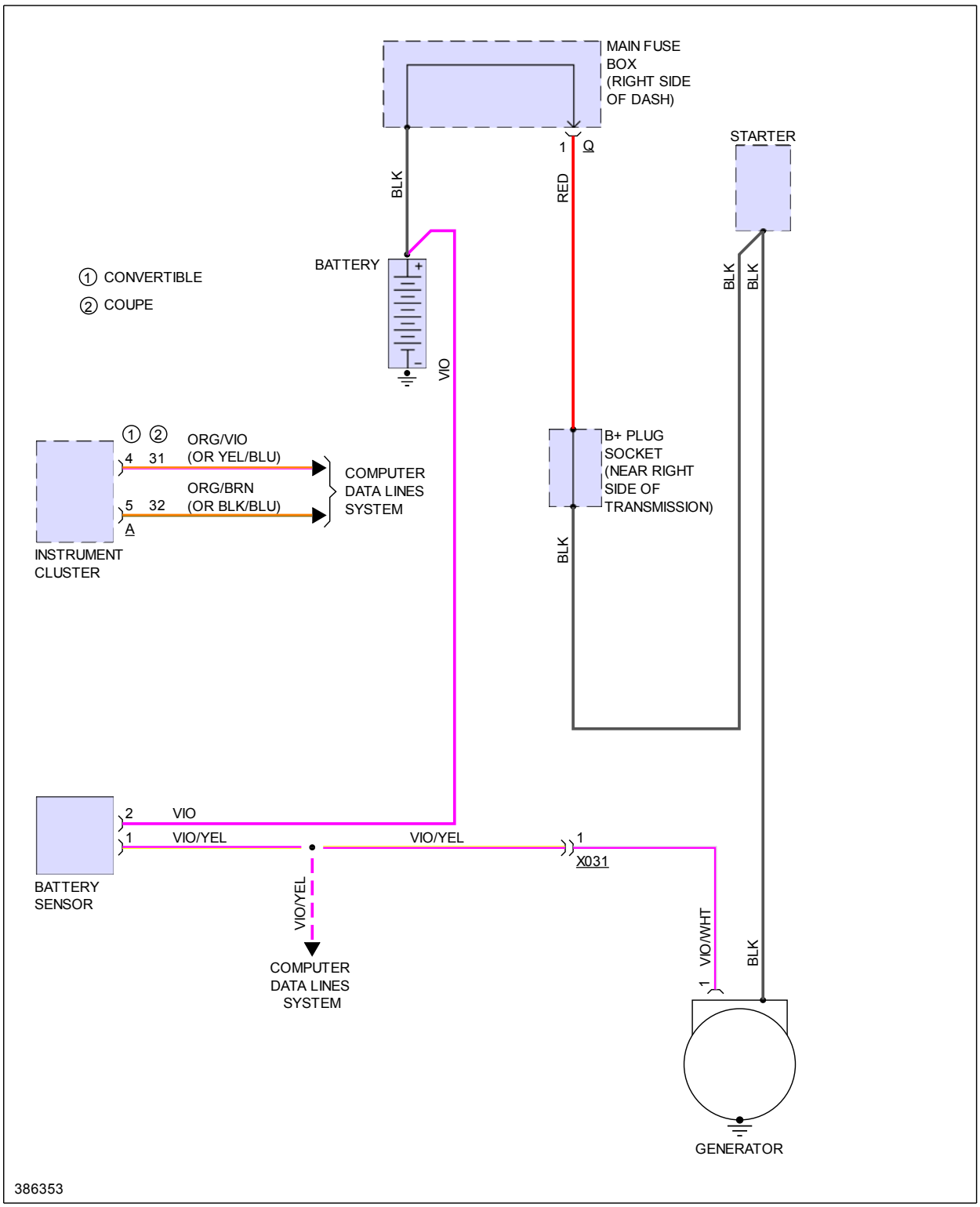

Fig 2: 3.4L, Starting Circuit

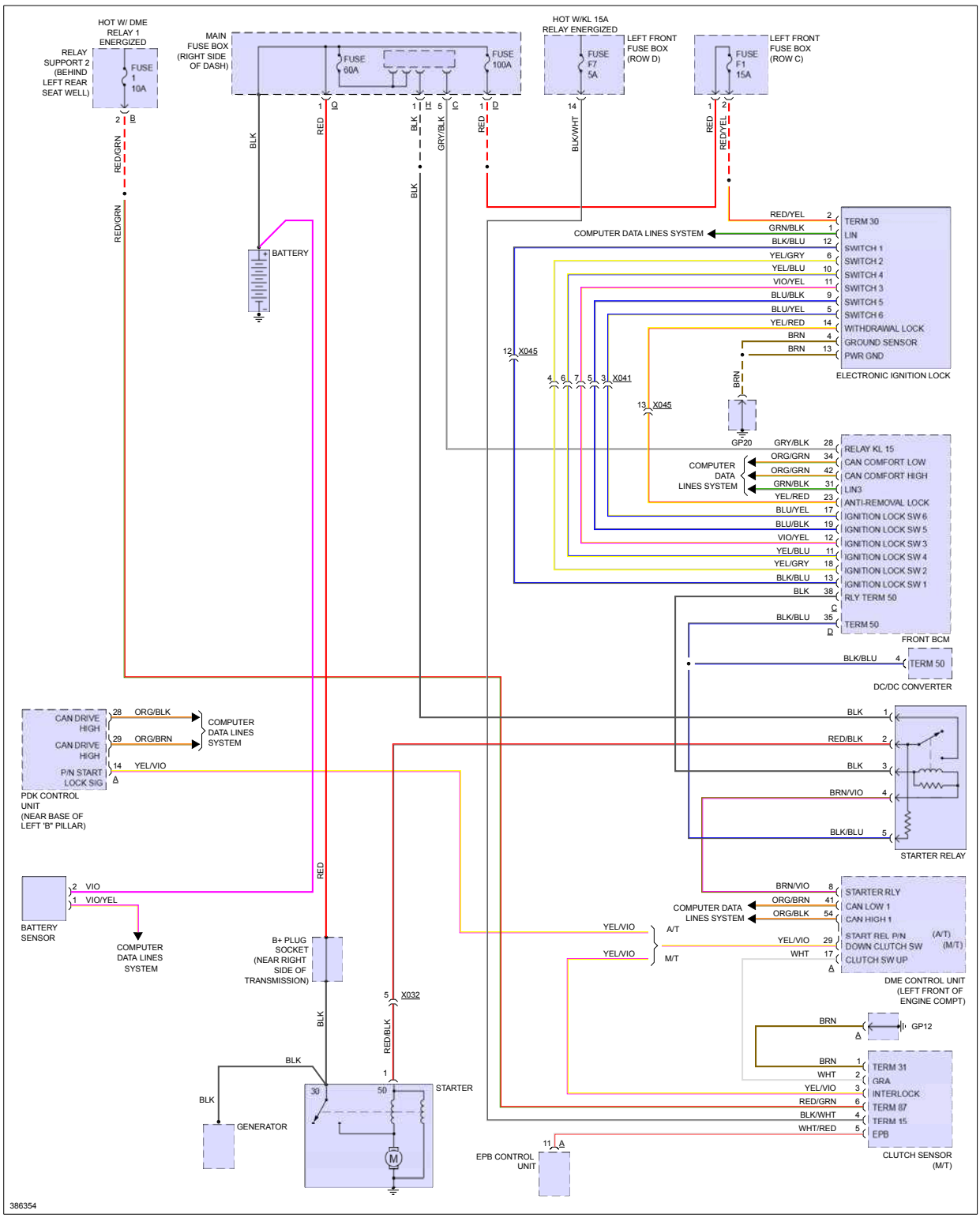

STARTING/CHARGING > 3.8L

Fig 1: 3.8L, Charging Circuit

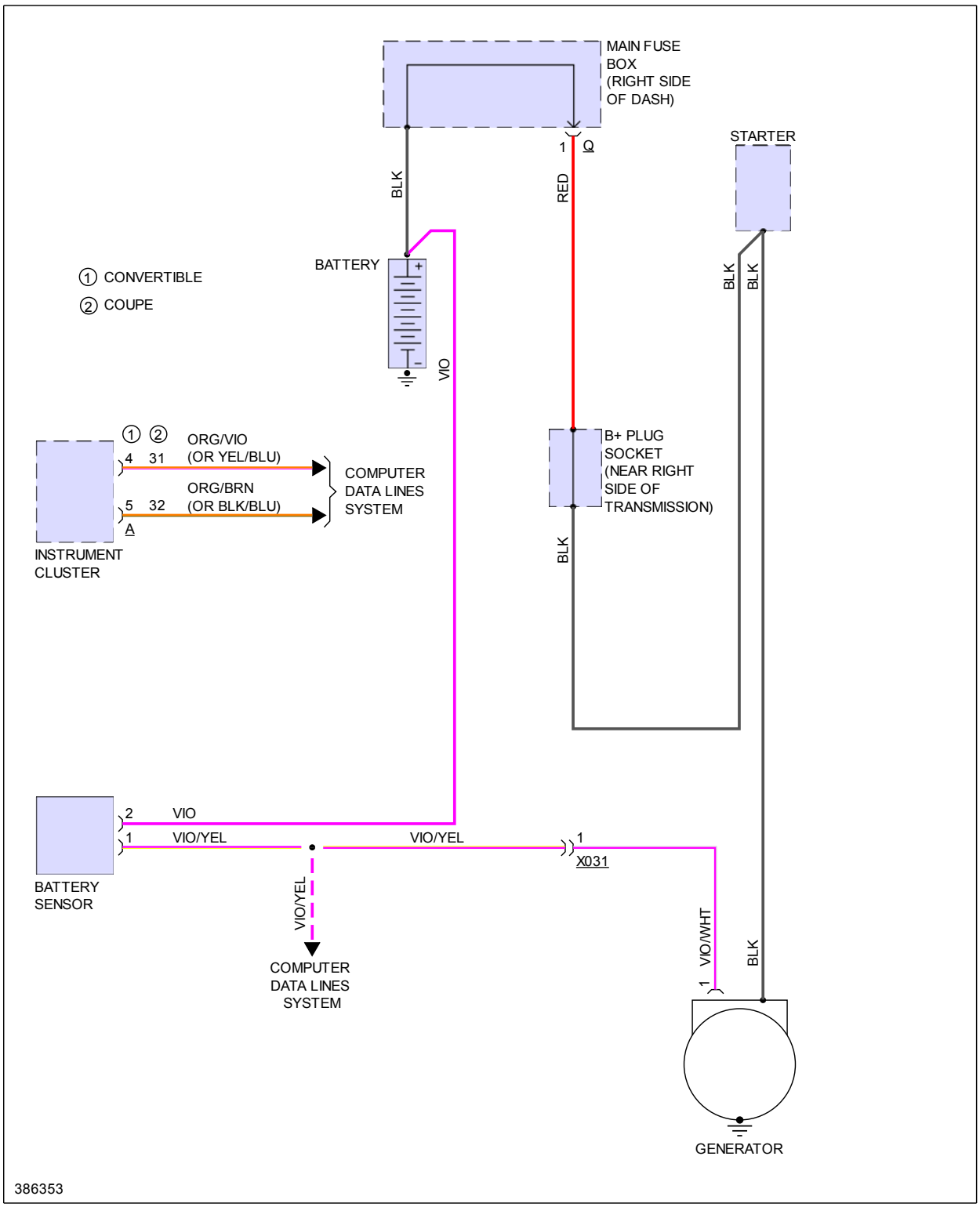

Fig 2: 3.8L, Starting Circuit

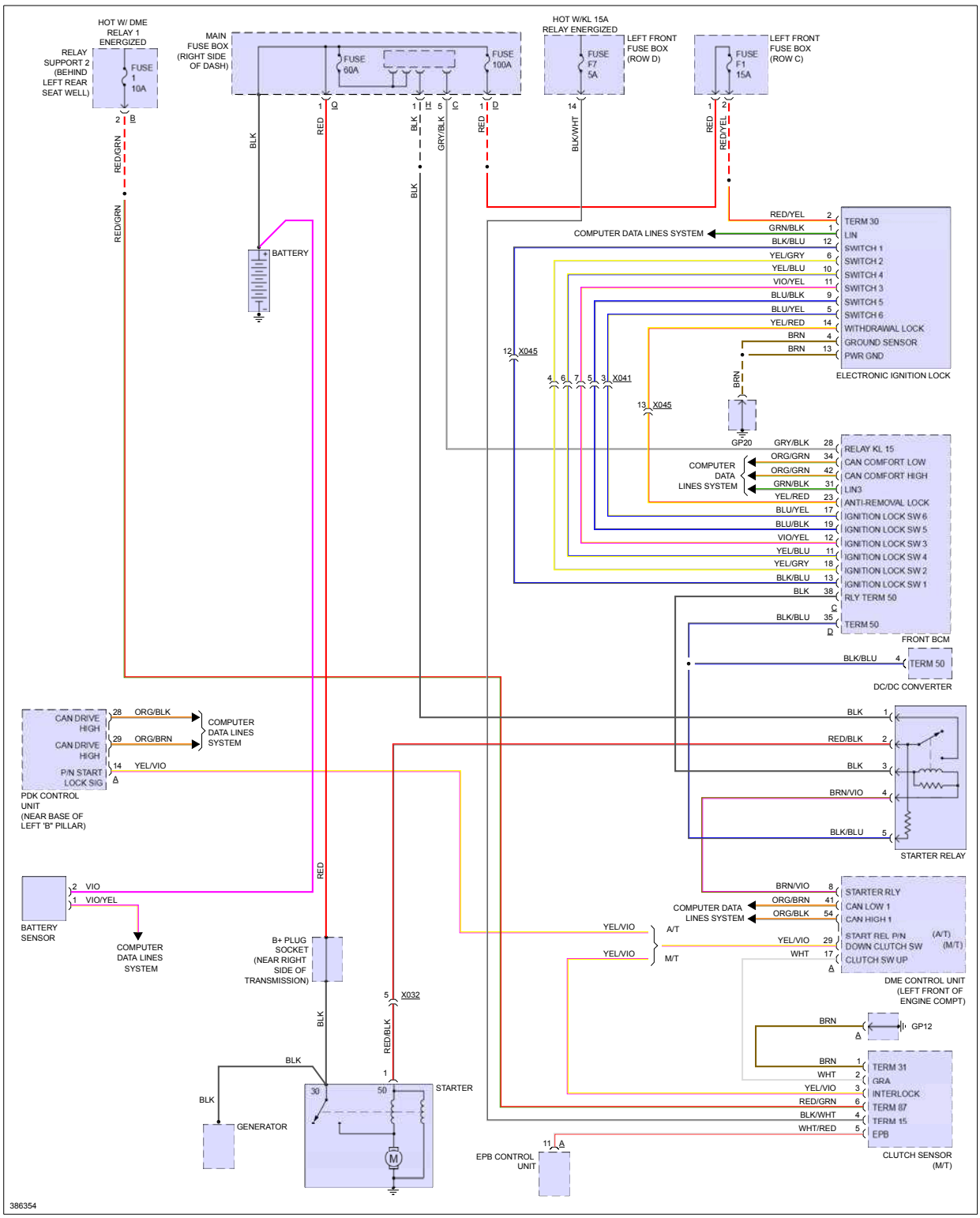

STARTING/CHARGING > 3.8L TWIN TURBO

Fig 1: 3.8L Twin Turbo, Charging Circuit

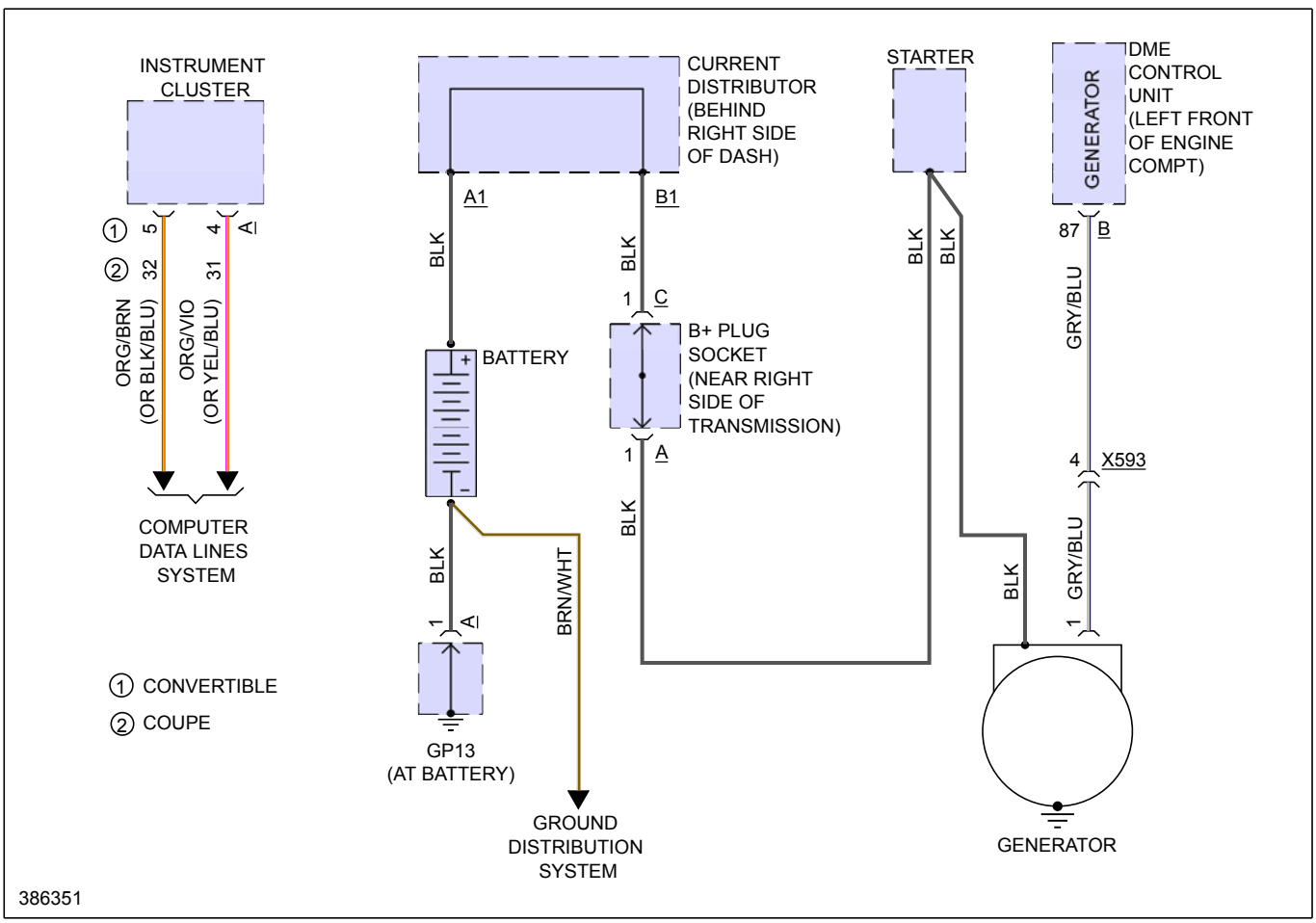

Fig 2: 3.8L Twin Turbo, Starting Circuit

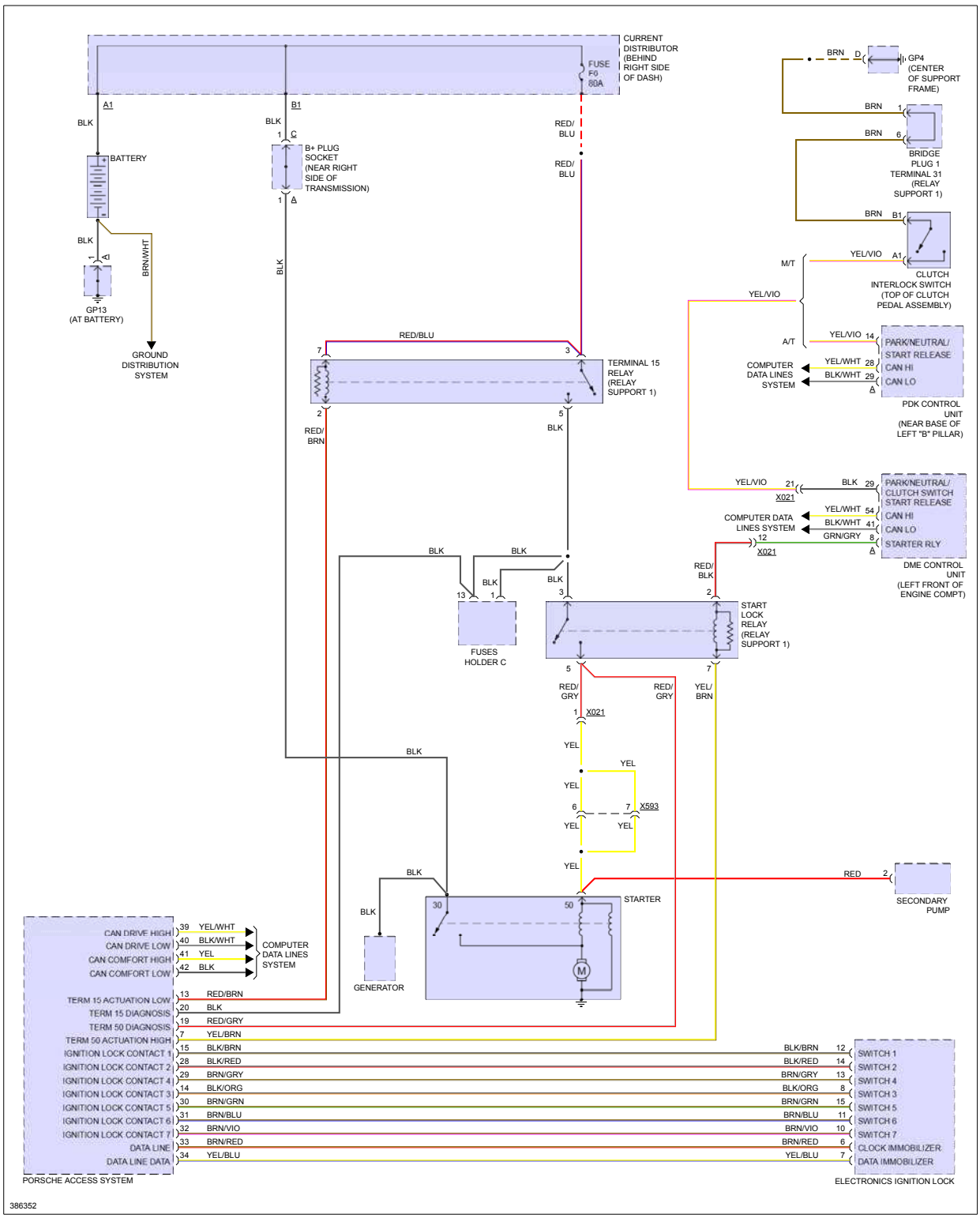

SUPPLEMENTAL RESTRAINTS

Fig 1: Supplemental Restraints Circuit, W/ Turbo (1 of 2)

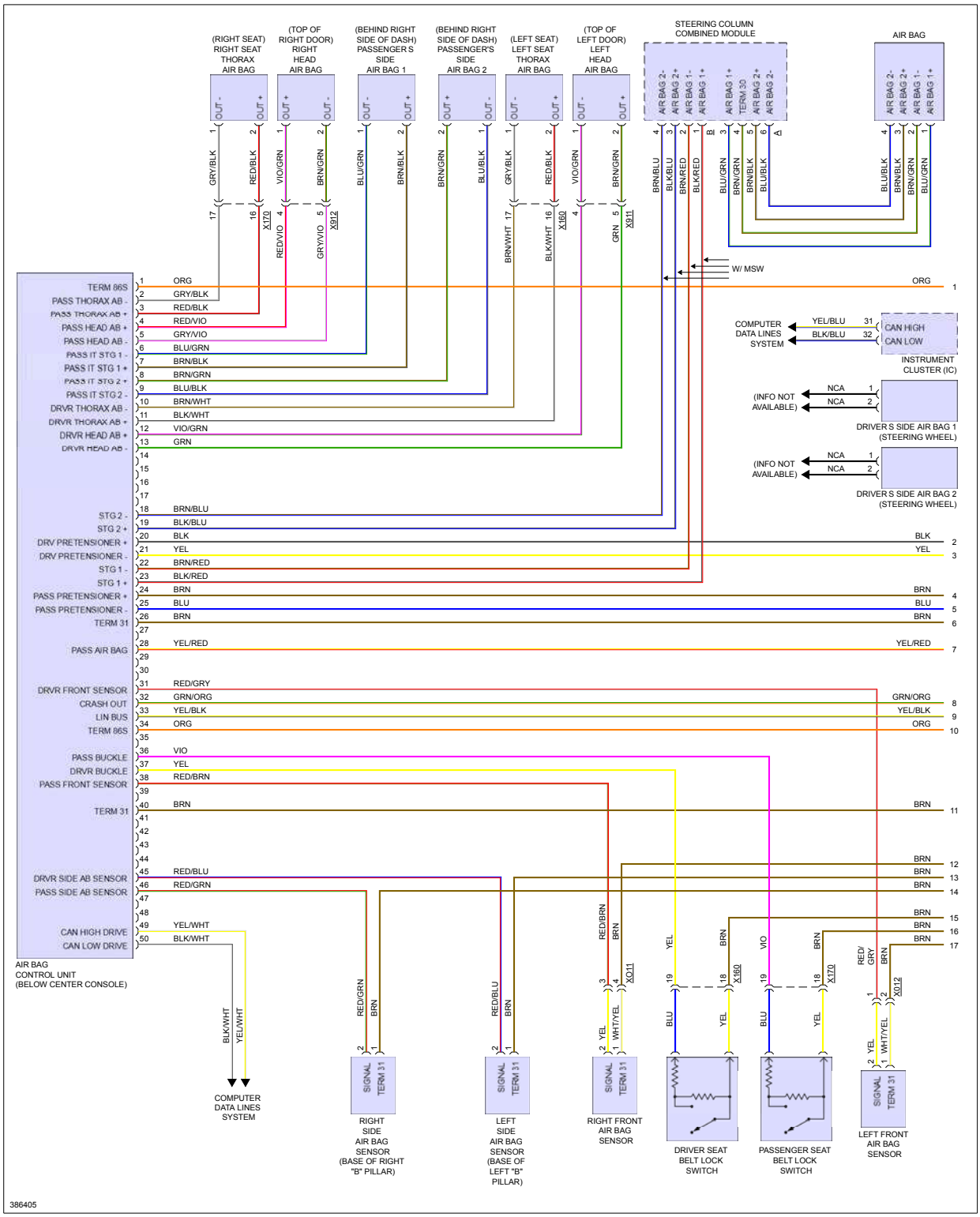

Fig 2: Supplemental Restraints Circuit, W/ Turbo (2 of 2)

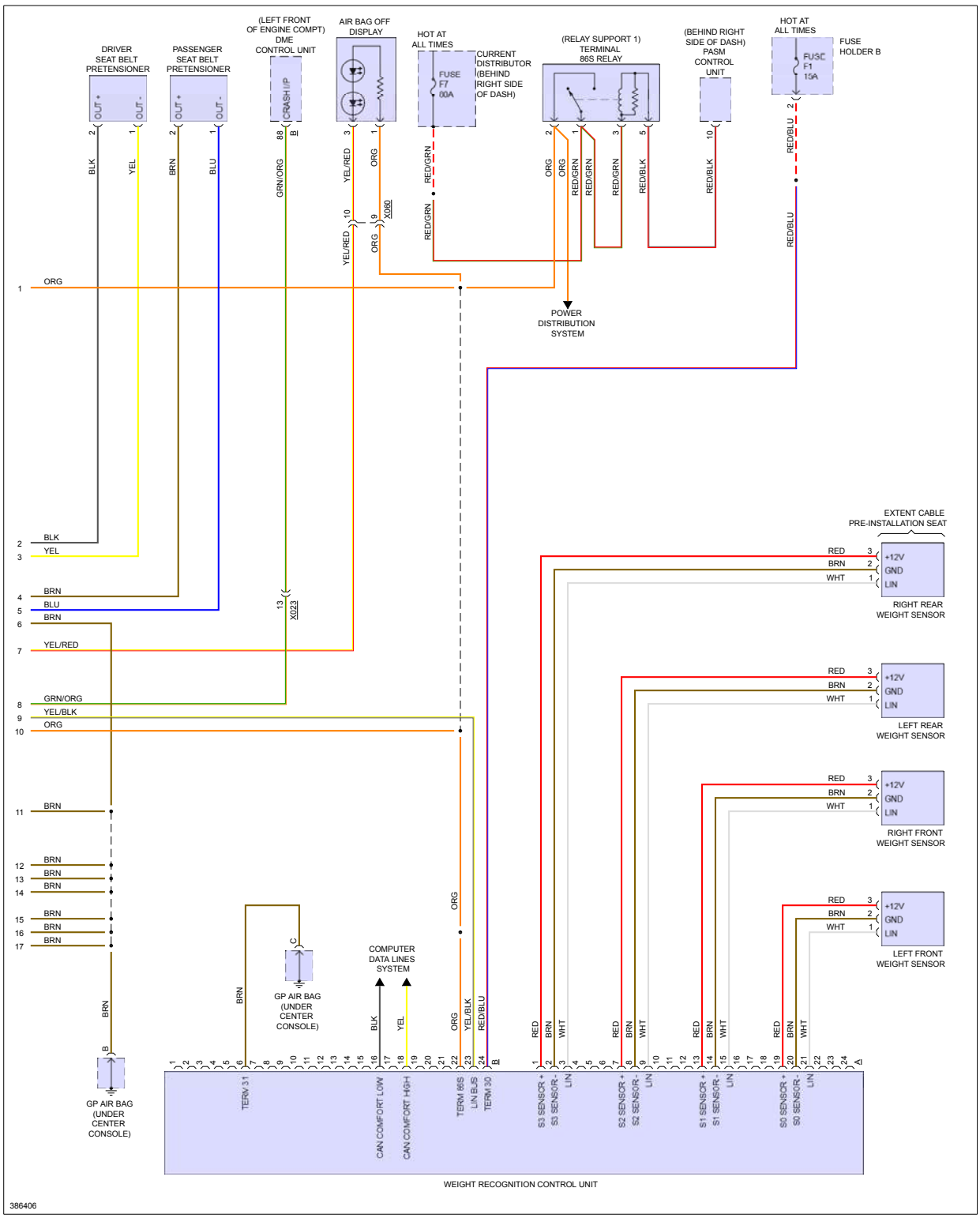

Fig 3: Supplemental Restraints Circuit, W/O Turbo (1 of 3)

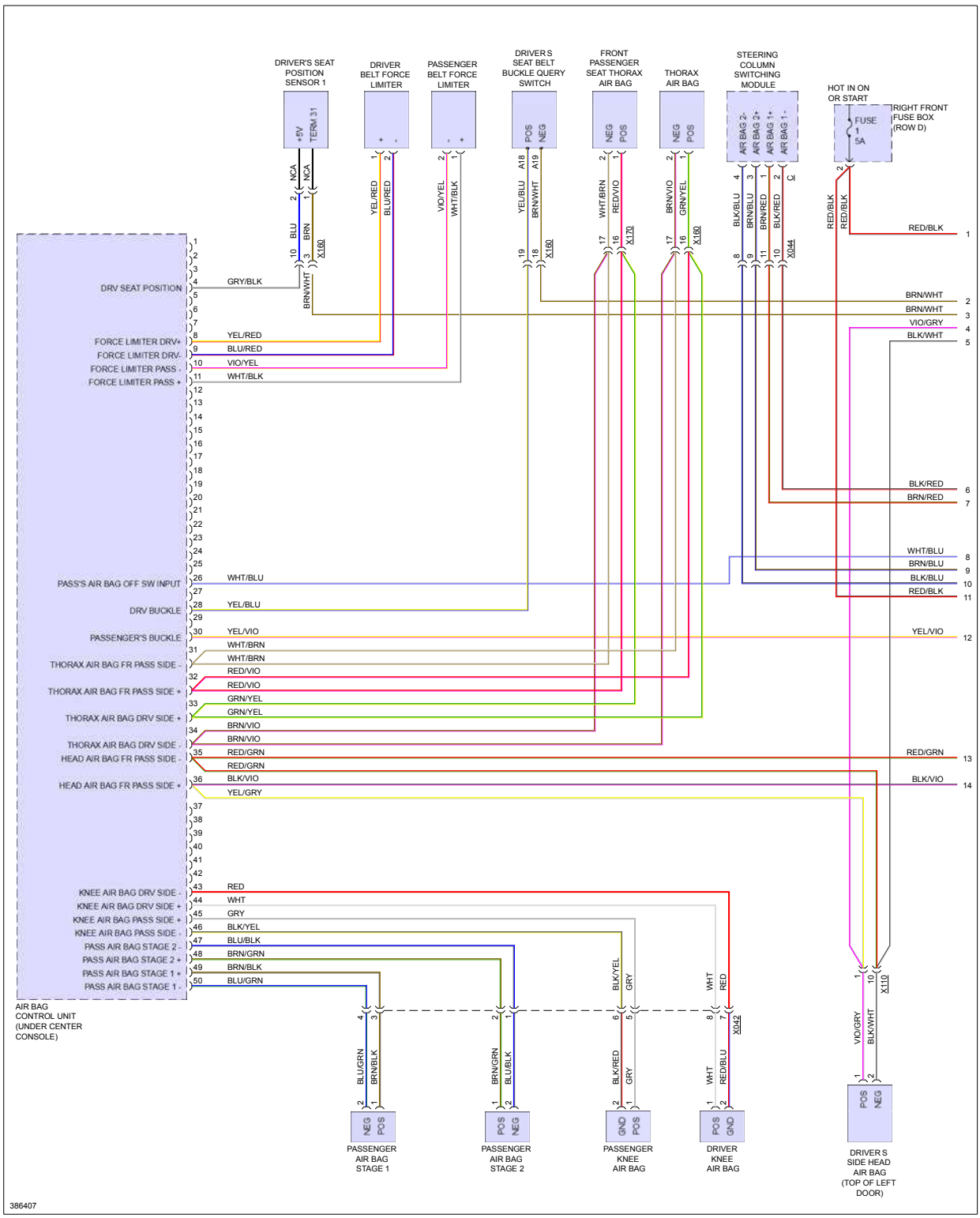

Fig 4: Supplemental Restraints Circuit, W/O Turbo (2 of 3)

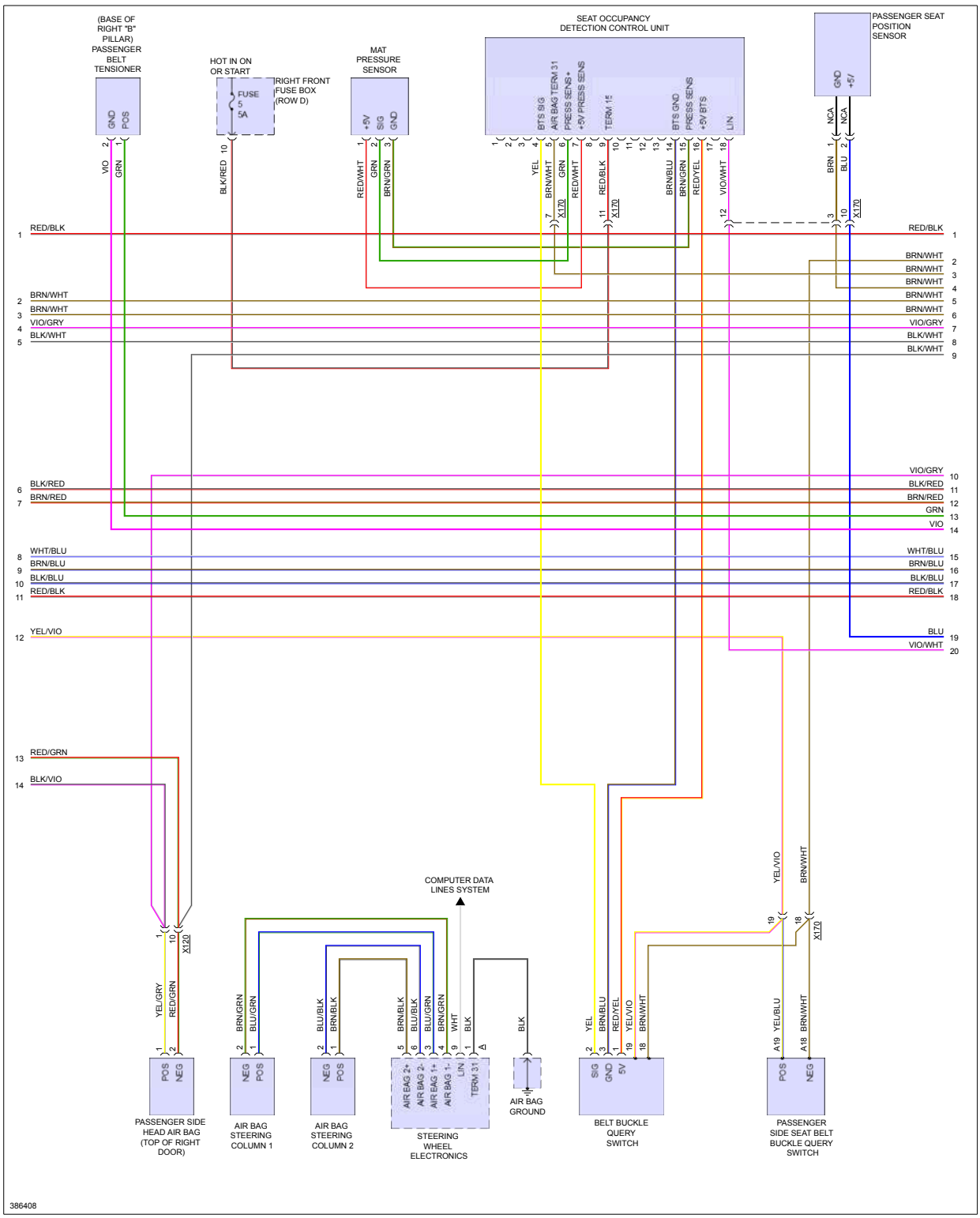

Fig 5: Supplemental Restraints Circuit, W/O Turbo (3 of 3)

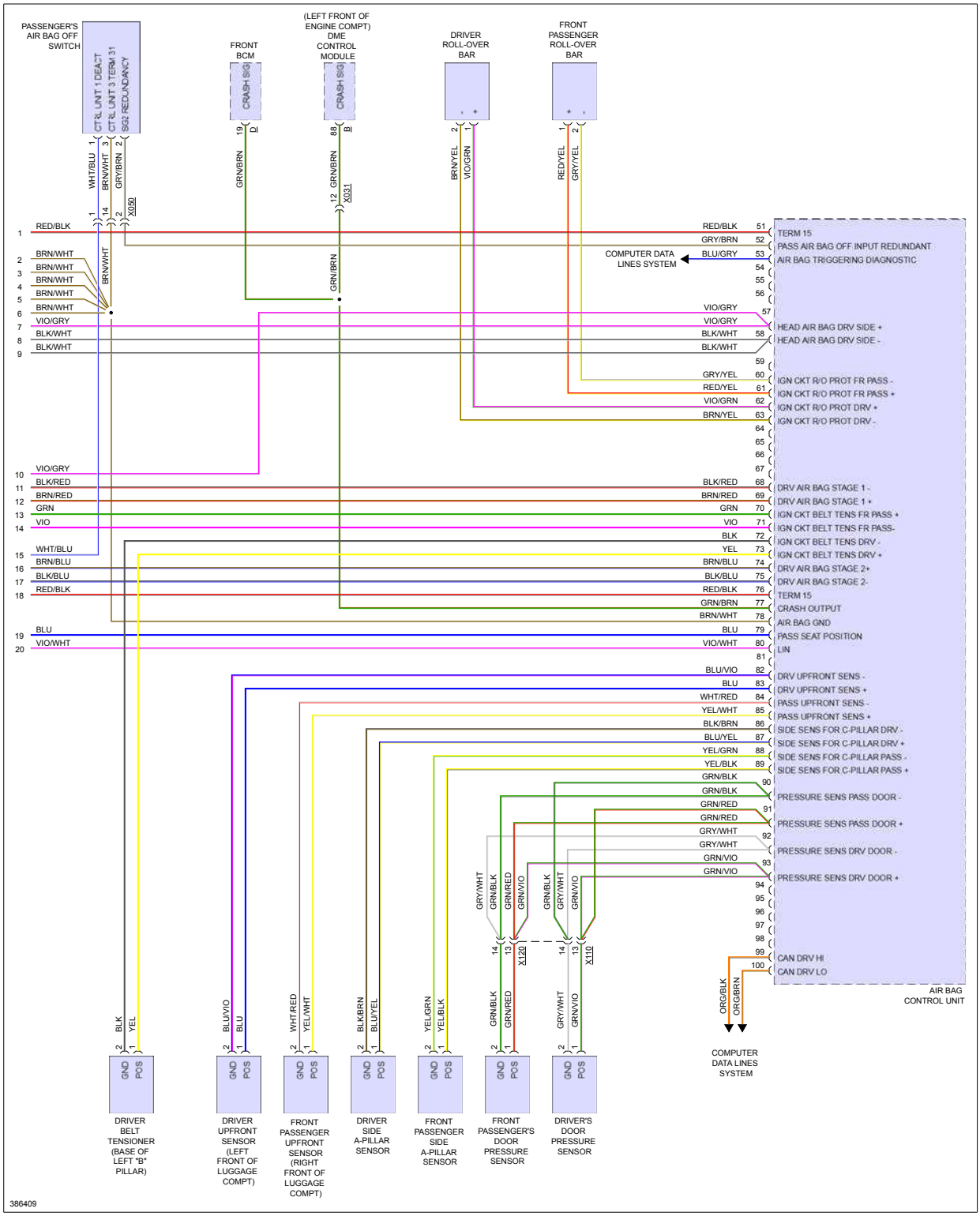

TRANSMISSION

Fig 1: A/T Circuit, W/ Turbo

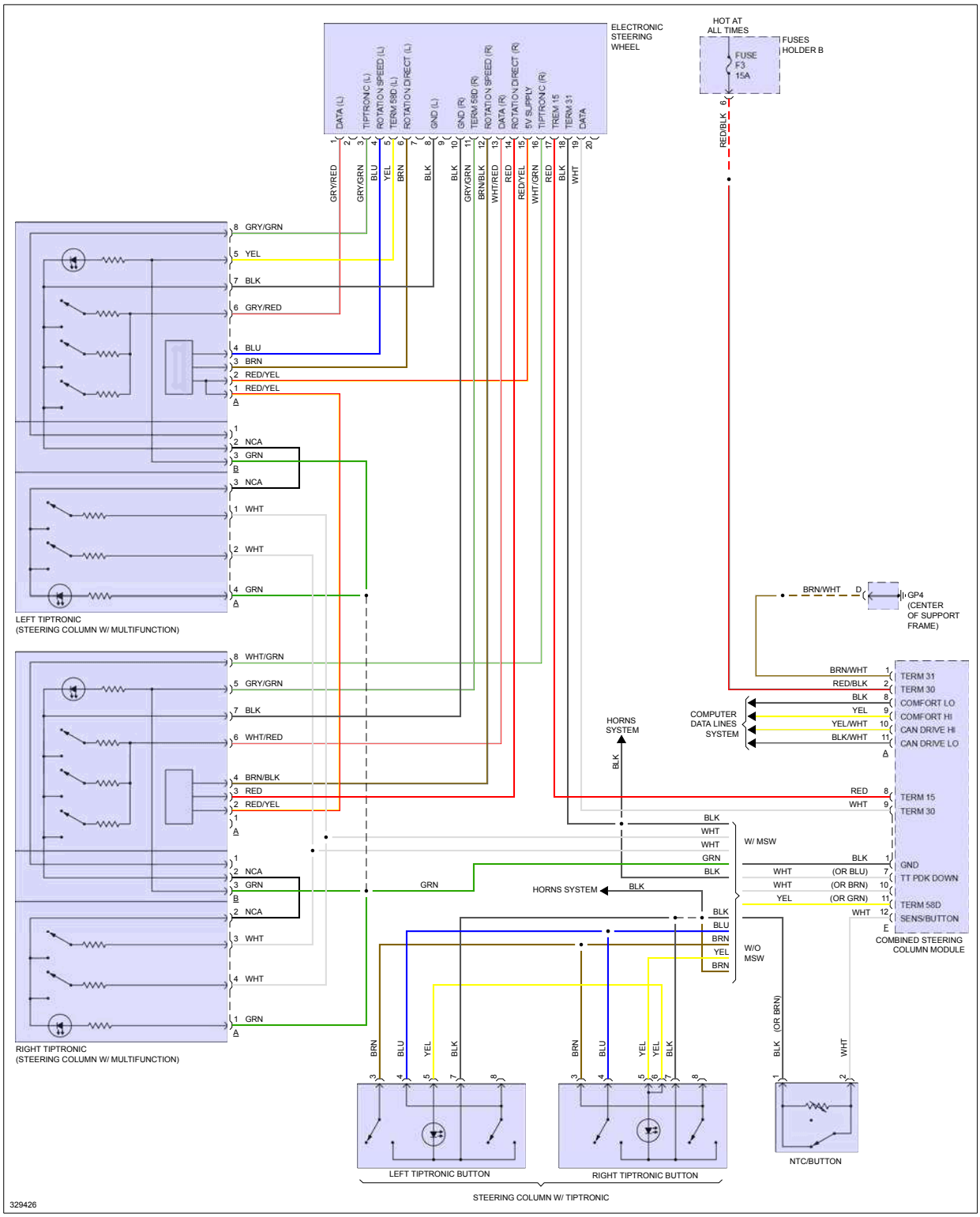

Fig 2: A/T Circuit, W/O Turbo

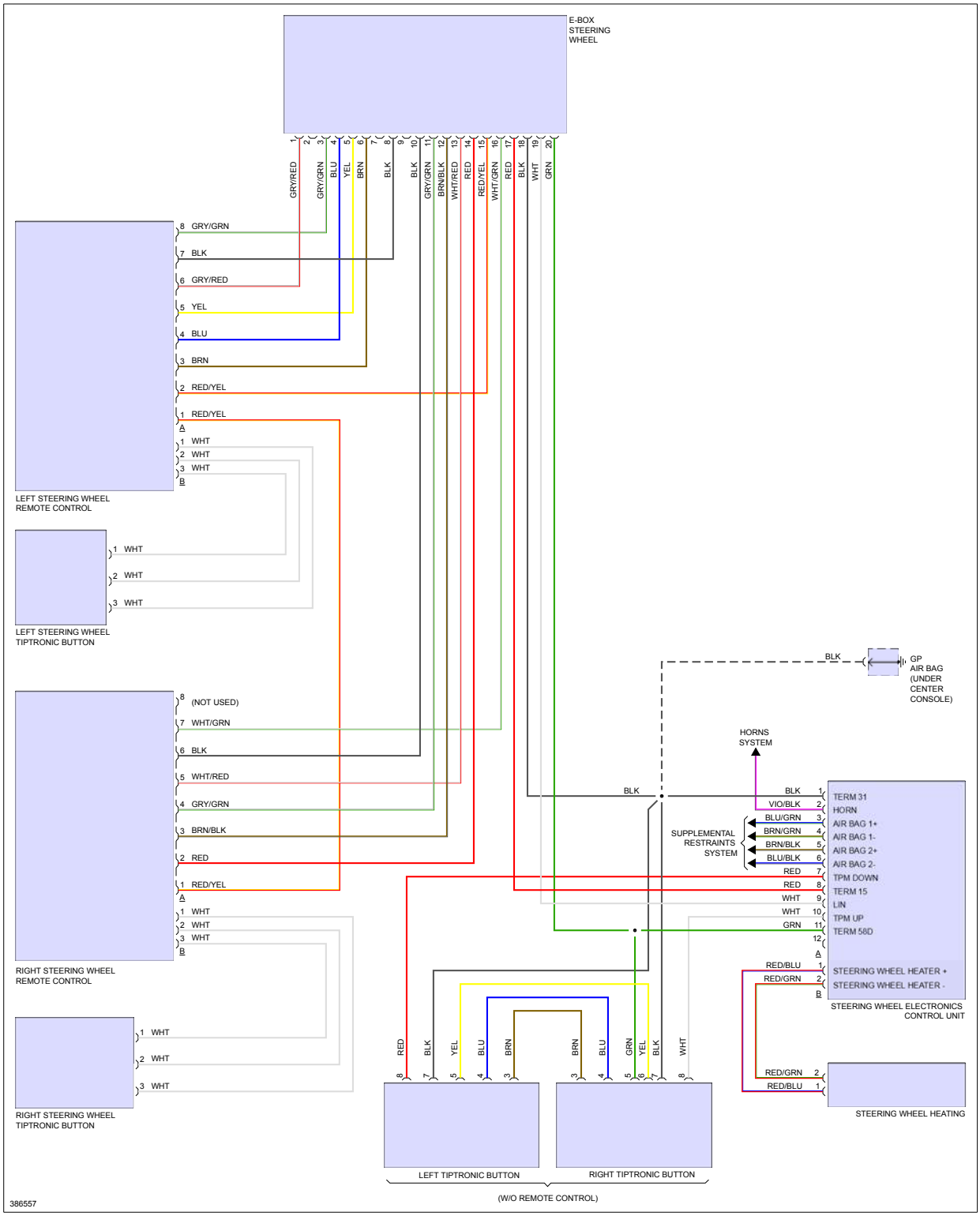

Fig 3: AWD Circuit

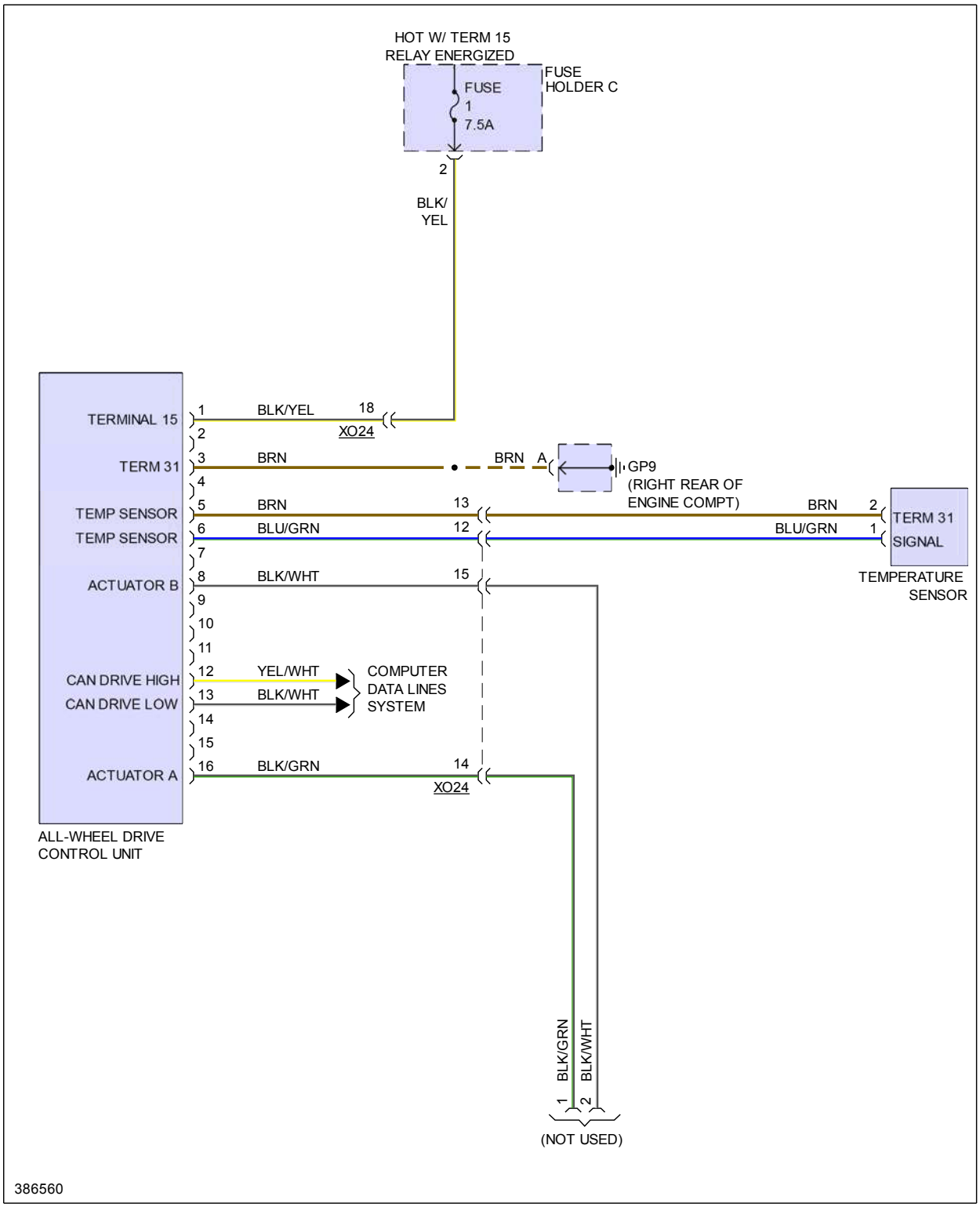

Fig 4: PDK Circuit (1 of 2)

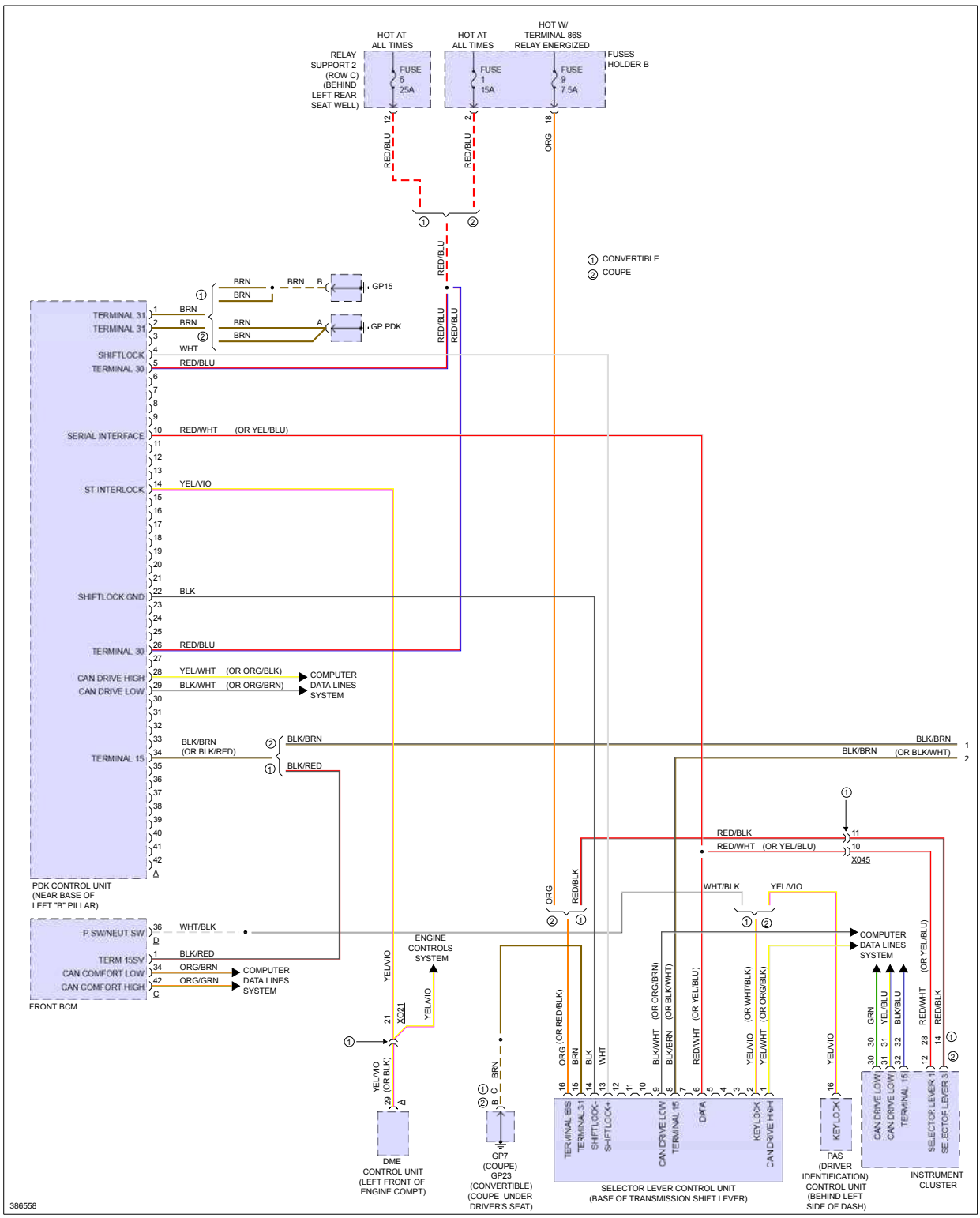

Fig 5: PDK Circuit (2 of 2)

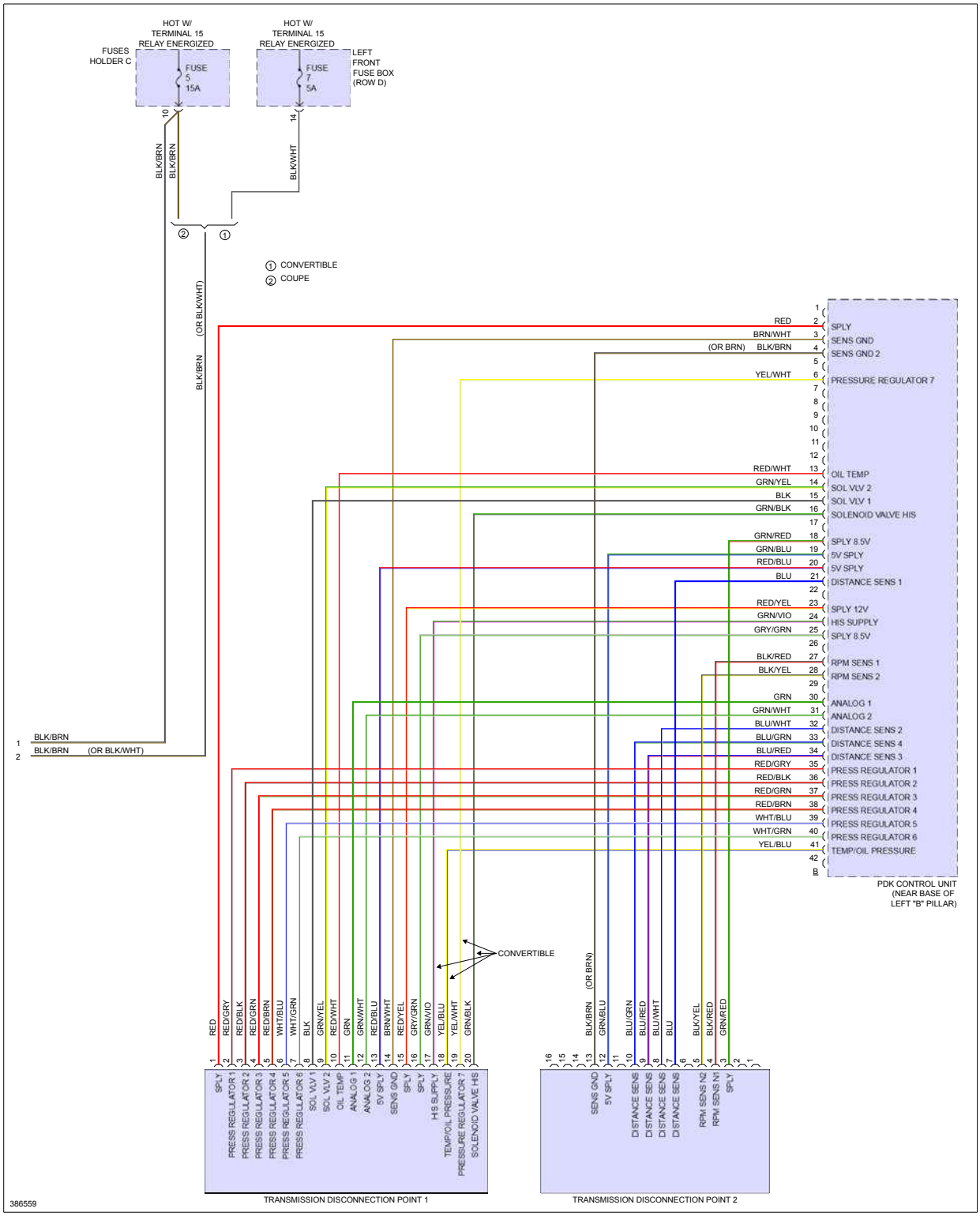

TRUNK, TAILGATE, FUEL DOOR

Fig 1: Tailgate & Fuel Door Release Circuit

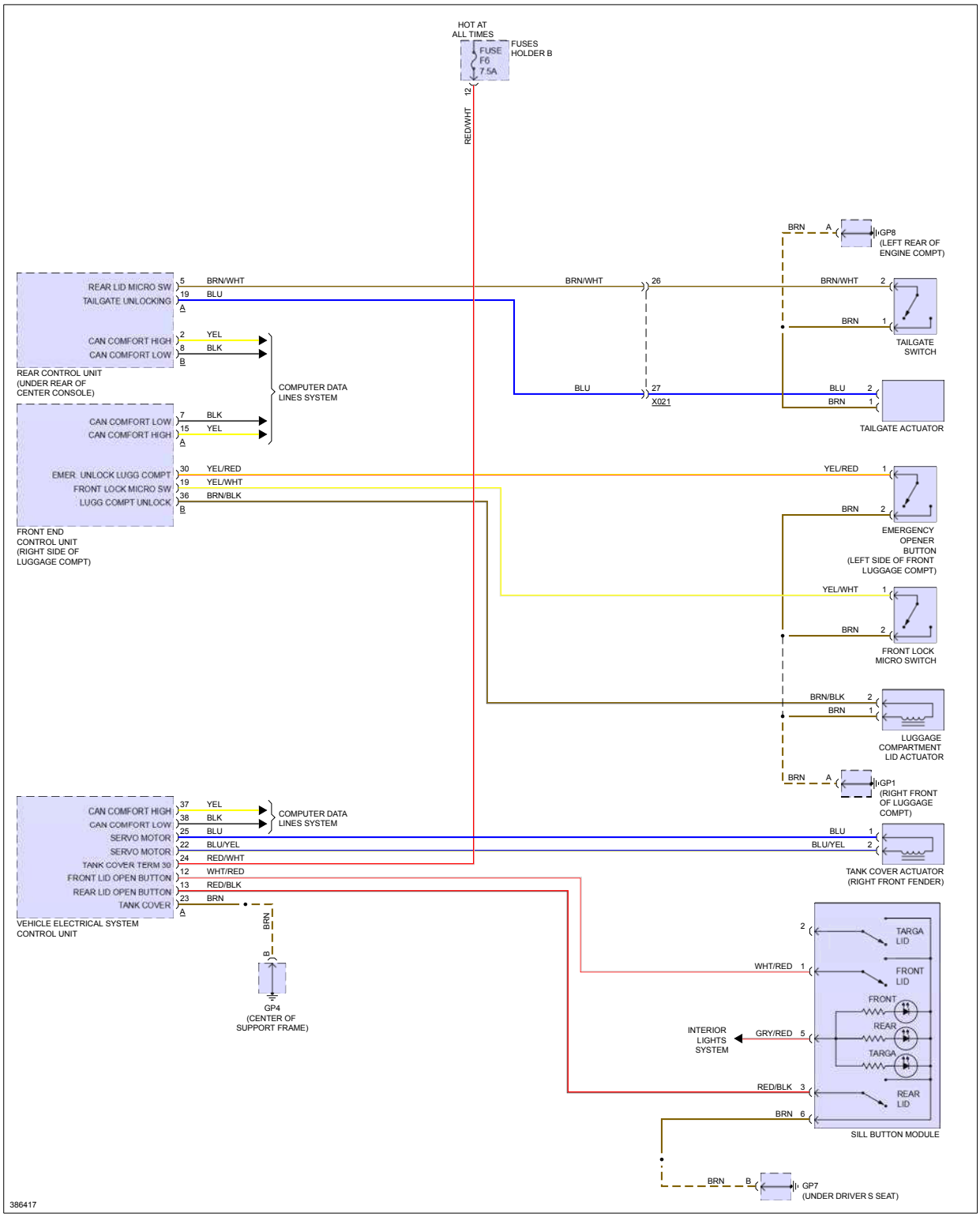

WARNING SYSTEMS

Fig 1: Warning Systems Circuit, W/ Turbo

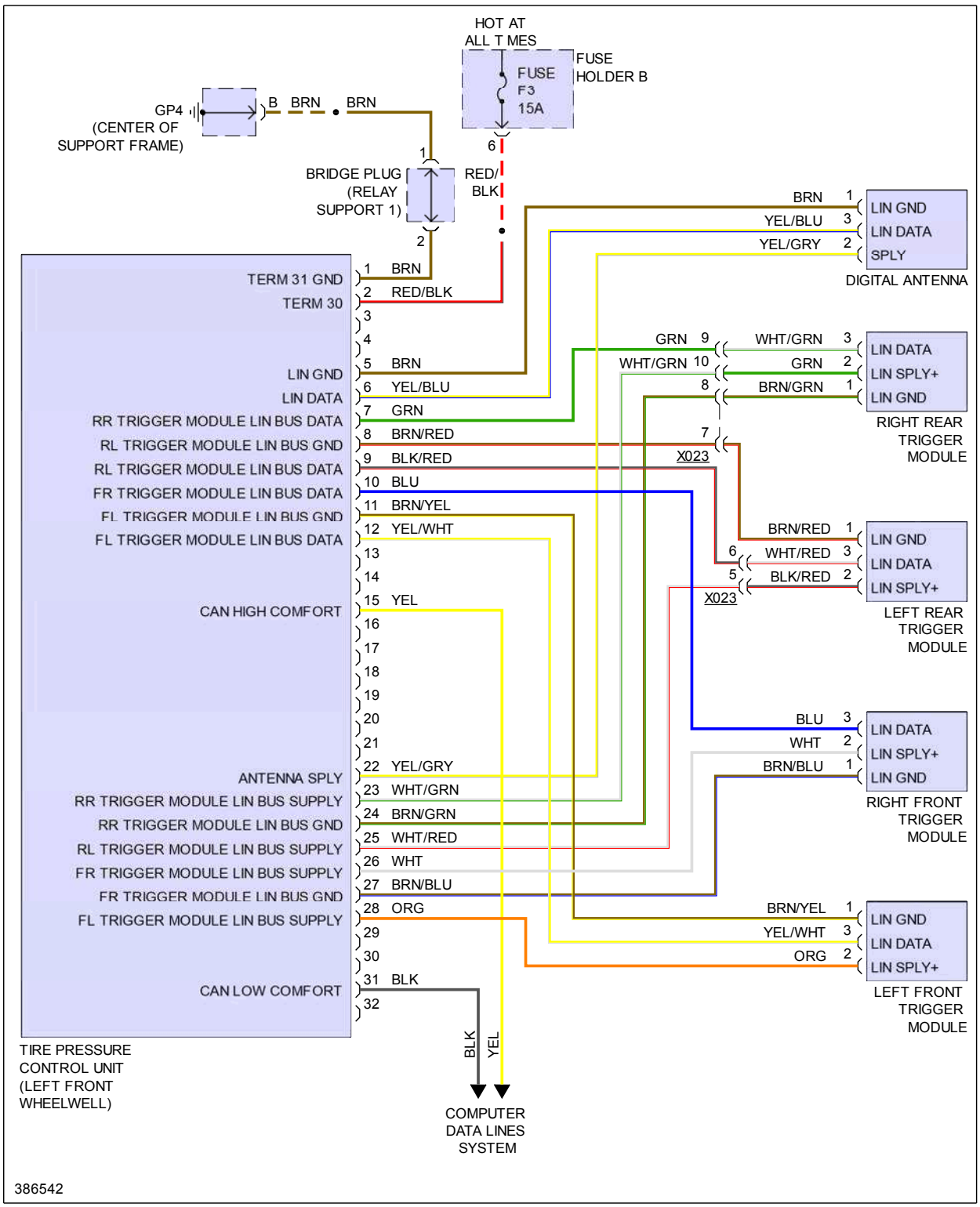

Fig 2: Warning Systems Circuit, W/O Turbo

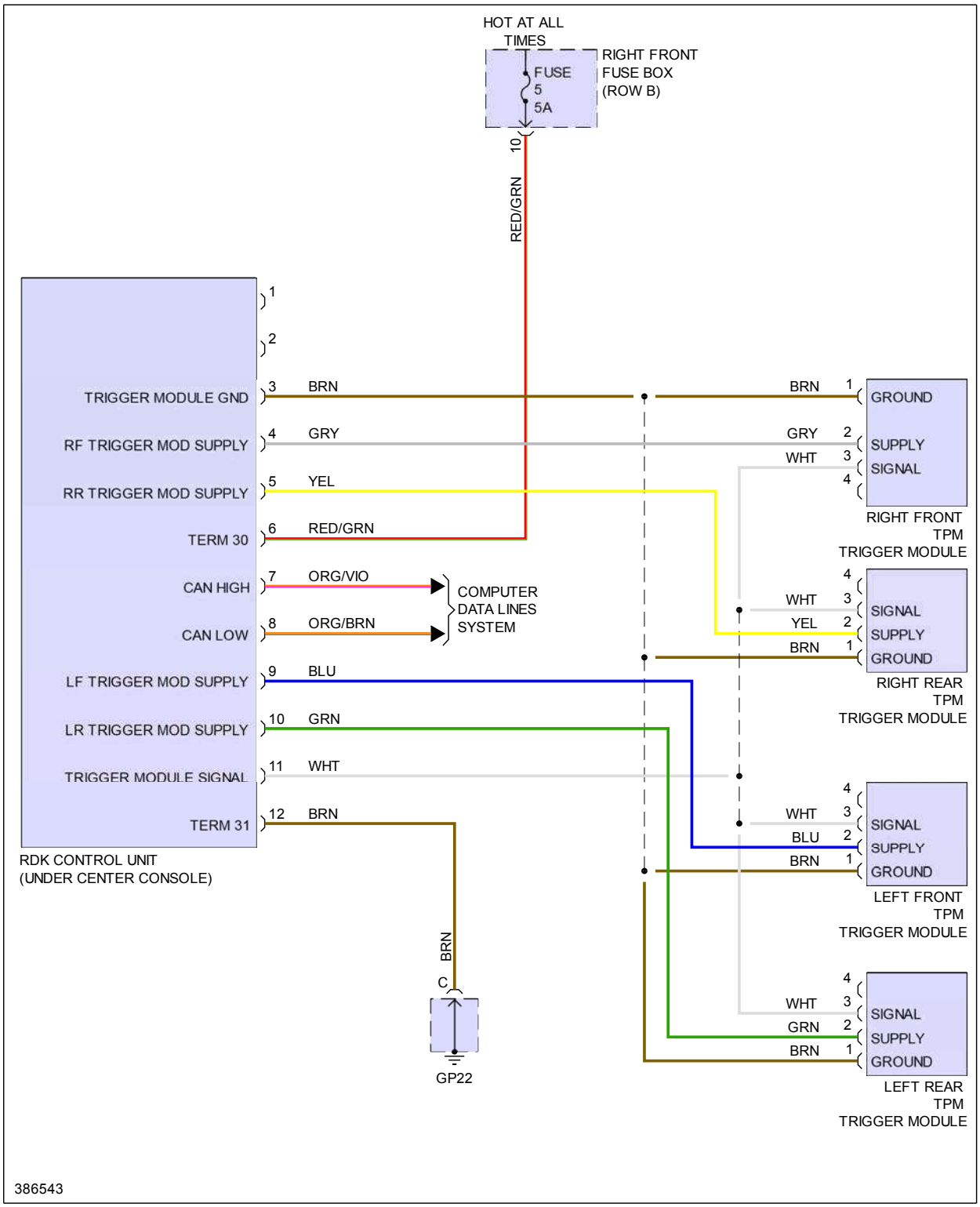

WIPER/WASHER

Fig 1: Front Wiper/Washer Circuit, Turbo W/ Rain Sensor

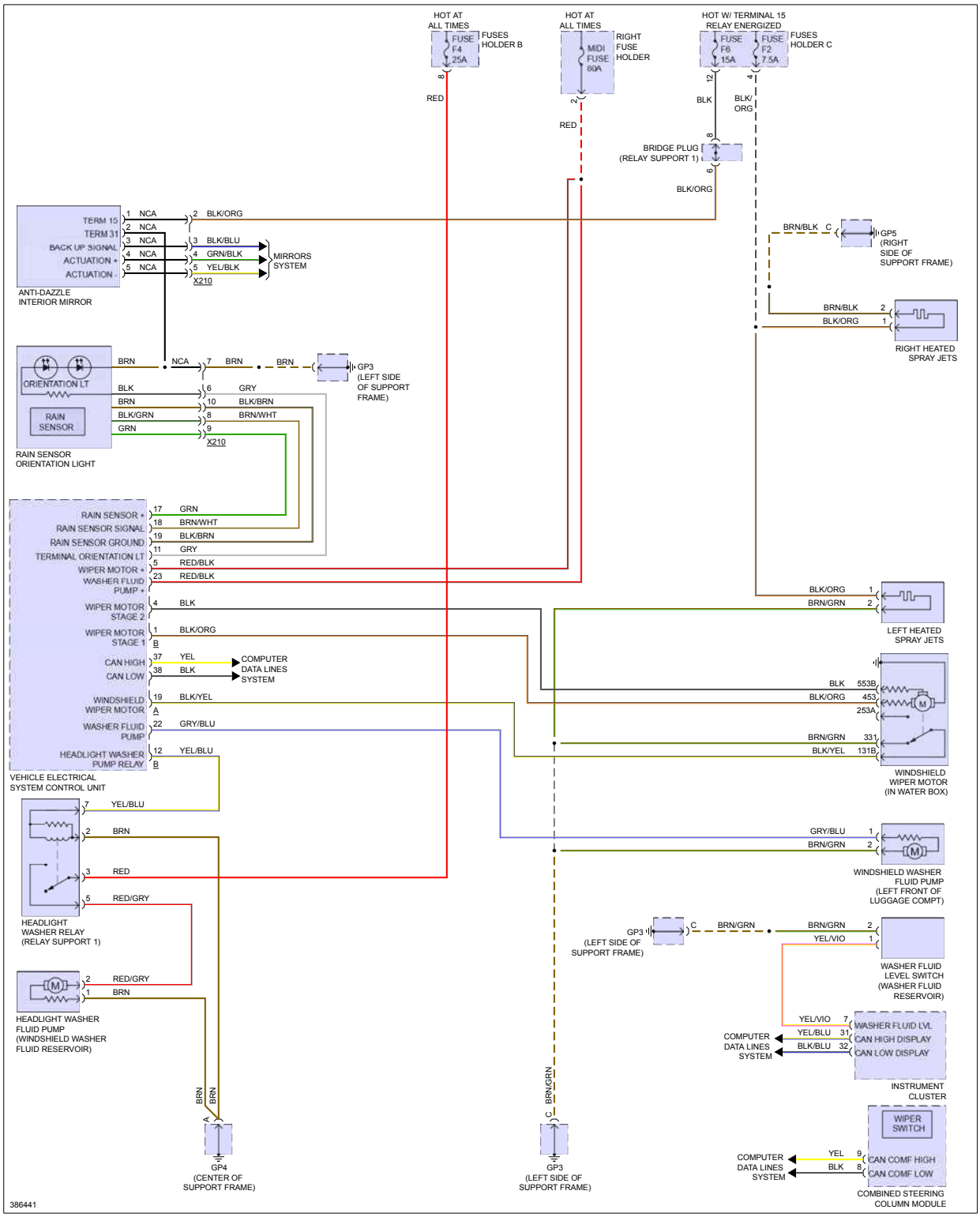

Fig 2: Front Wiper/Washer Circuit, Turbo W/O Rain Sensor

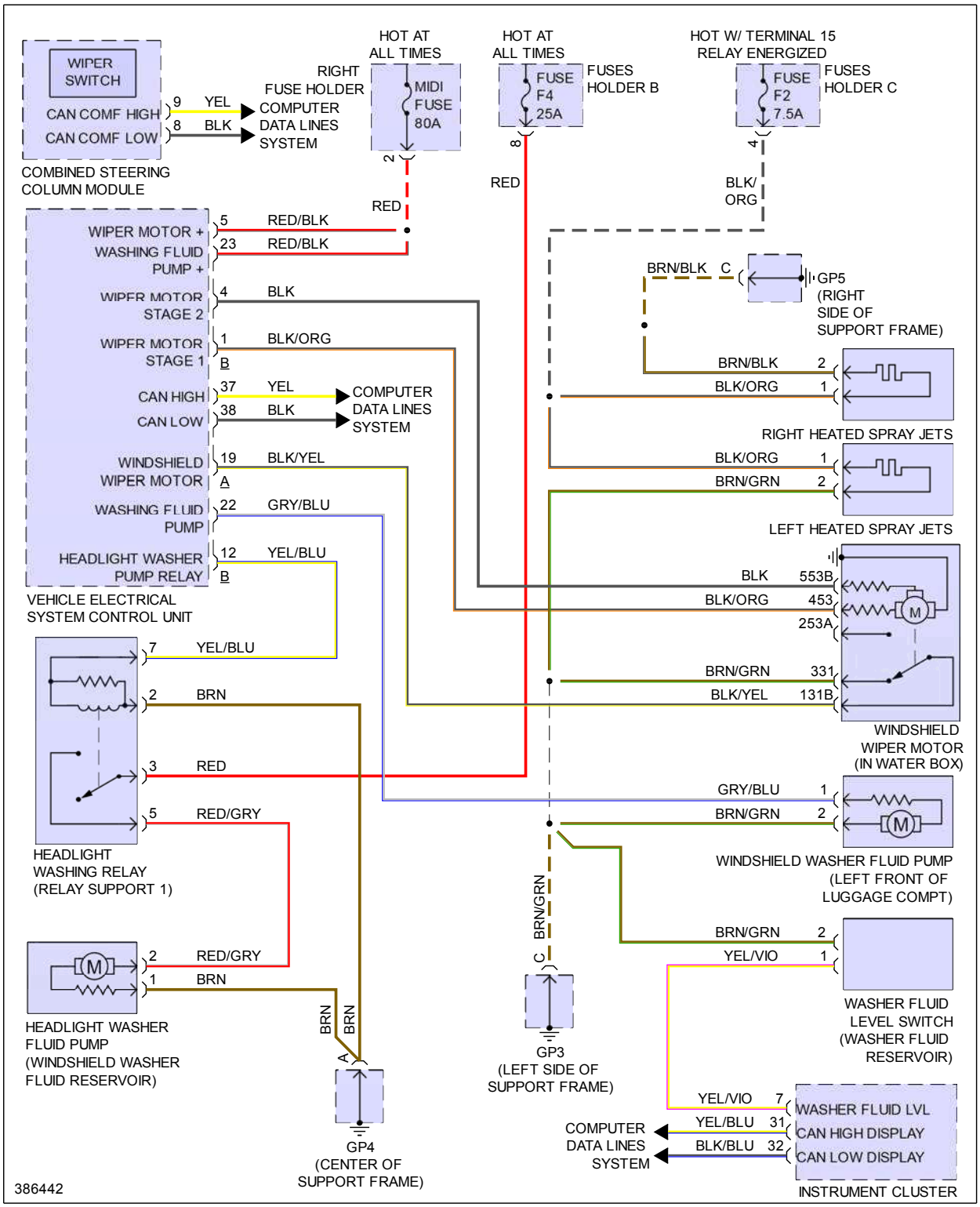

Fig 3: Front Wiper/Washer Circuit, W/O Turbo

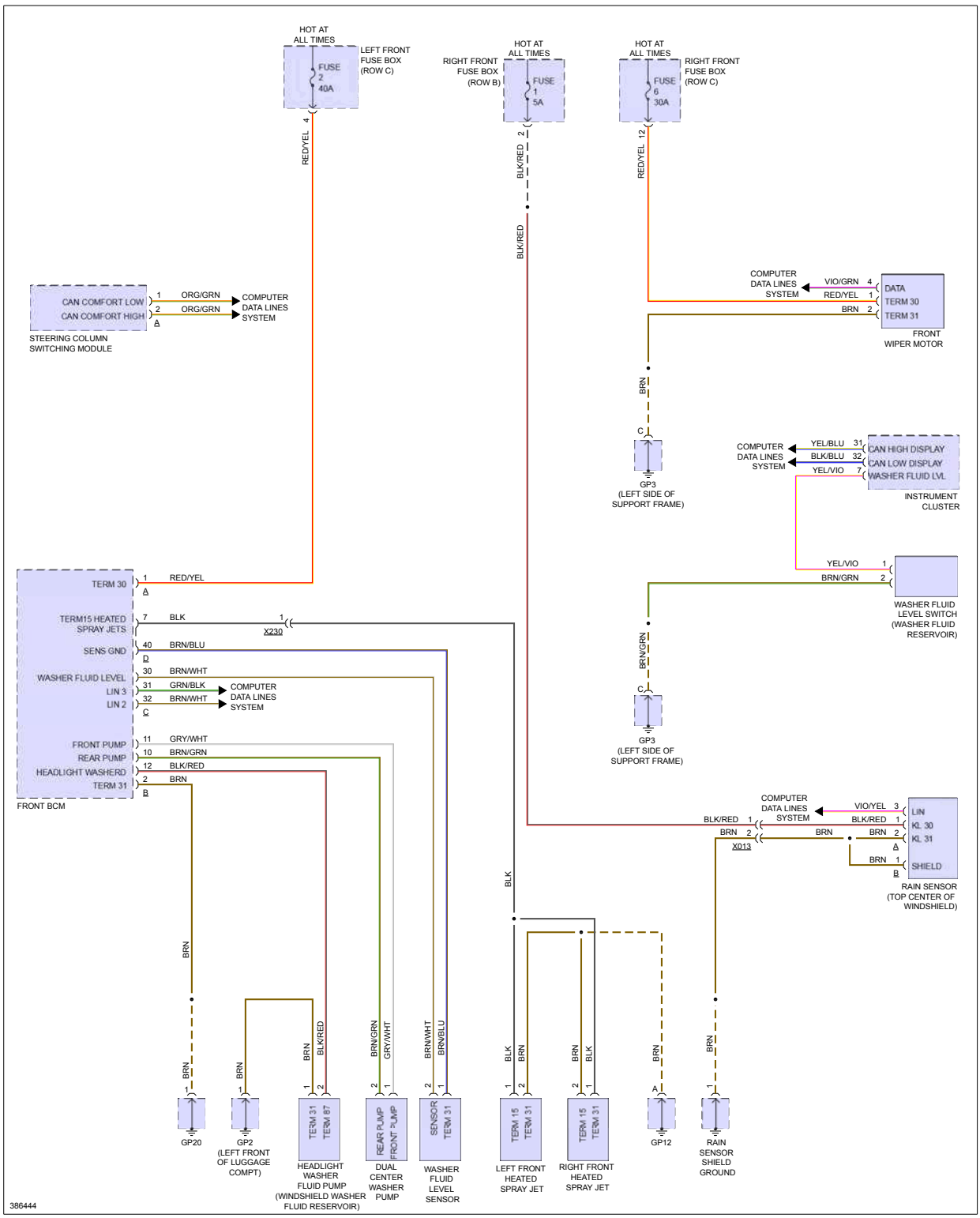

Fig 4: Rear Wiper Circuit, W/ Turbo

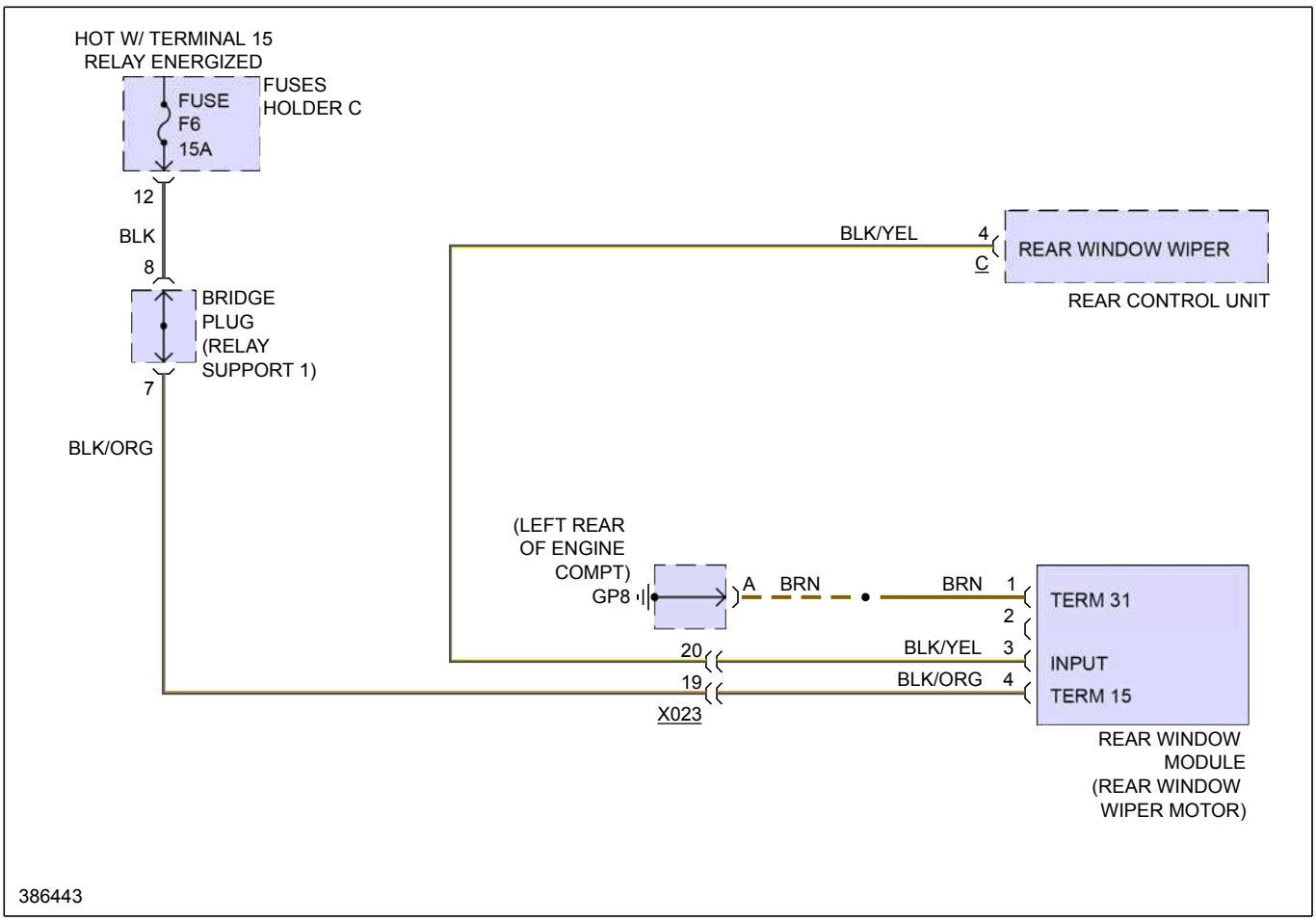

Fig 5: Rear Wiper Circuit, W/O Turbo