HCD-EC55/EC77/GX99

SERVICE MANUAL

Ver. 1.2 2007.07

Photo : HCD-EC55 (E model)

US Model
Canadian Model
HCD-EC55/EC77/GX99
AEP Model
HCD-EC55/EC77
UK Model
HCD-EC55
E Model
Australian Model
HCD-EC55/EC77

- HCD-EC55 (US and Canadian models) and HCD-EC77/GX99 (US and Canadian models) are the Amplifier, CD player and Tuner section in MHC-EC55/EC77/GX99.
- HCD-EC55 (Except US and Canadian models) and HCD-EC77/GX99 (Except US and Canadian models) are the Amplifier, CD player, Tape Deck and Tuner section in MHC-EC55/EC77/GX99.

CD Section	Model Name Using Similar Mechanism	NEW
	Base Unit Name	BU-K6BD90-WOD
	Optical Pick-up Name	KSM-213DCP
TAPE Section	Model Name Using Similar Mechanism	NEW
	Tape Transport Mechanism Type	CS-21SC-901TP

SPECIFICATIONS

Main unit

AUDIO POWER SPECIFICATIONS
POWER OUTPUT AND TOTAL HARMONIC DISTORTION:
(HCD-GX99, HCD-EC77 The United States model only)
Low channel
With 8 ohm loads, both channels driven, from 120 – 10,000 Hz; 60 watts per channel minimum RMS power, with no more than 0.7% total harmonic distortion from 250 milliwatts to rated output.
High channel
With 8 ohm loads, both channels driven, from 2,000 – 13,000 Hz; 60 watts per channel minimum RMS power, with no more than 0.7% total harmonic distortion from 250 milliwatts to rated output.

AUDIO POWER SPECIFICATIONS
POWER OUTPUT AND TOTAL HARMONIC DISTORTION:
(HCD-EC55 The United States model only)
With 6 ohm loads, both channels driven, from 120 – 10,000 Hz; 45 watts per channel minimum RMS power, with no more than 0.7% total harmonic distortion from 250 milliwatts to rated output.

Amplifier section

HCD-GX99
Front speaker:
RMS output power (reference):
Low channel
95 W + 95 W (per channel at 8 Ω, 1 kHz, 10% THD)
High channel
95 W + 95 W (per channel at 8 Ω, 8 kHz, 10% THD)
Subwoofer:
RMS output power (reference):
150 W (at 6 Ω, 80 Hz, 10% THD)

HCD-EC77
North American model:
RMS output power (reference):
Low channel
95 W + 95 W (per channel at 8 Ω, 1 kHz, 10% THD)
High channel
95 W + 95 W (per channel at 8 Ω, 8 kHz, 10% THD)

European and Russian models:
Power output (rated):
Low channel
45 W + 45 W (at 8 Ω, 1 kHz, 1% THD)
High channel
45 W + 45 W (at 8 Ω, 8 kHz, 1% THD)
RMS output power (reference):
Low channel
65 W + 65 W (per channel at 8 Ω, 1 kHz, 10% THD)
High channel
65 W + 65 W (per channel at 8 Ω, 8 kHz, 10% THD)

Other models:
The following are measured at AC 120, 127, 220, 240 V, 50/60 Hz
Power output (rated):
Low channel
50 W + 50 W (at 8 Ω, 1 kHz, 1% THD)
High channel
50 W + 50 W (at 8 Ω, 8 kHz, 1% THD)
RMS output power (reference):
Low channel
70 W + 70 W (per channel at 8 Ω, 1 kHz, 10% THD)
High channel
70 W + 70 W (per channel at 8 Ω, 8 kHz, 10% THD)

HCD-EC55
North American model:
RMS output power (reference):
65 W+ 65 W (per channel at 6 Ω, 1 kHz, 10% THD)

European and Russian models:
Power output (rated): 45 W + 45 W (at 6 Ω, 1 kHz, 1% THD)
RMS output power (reference):
65 W + 65 W (per channel at 6 Ω, 1 kHz, 10% THD)

Other models:
The following are measured at AC 120, 127, 220, 240 V, 50/60 Hz
Power output (rated): 45 W + 45 W (at 6 Ω, 1 kHz, 1% THD)
RMS output power (reference):
65 W + 65 W (per channel at 6 Ω, 1 kHz, 10% THD)

Inputs

AUDIO IN (stereo mini jack): Sensitivity 800 mV, impedance 47 kilohms

Outputs

PHONES (stereo mini jack): Accepts headphones with an impedance of 8 Ω or more
SPEAKER: Accepts impedance of 6 to 8 Ω
SUBWOOFER OUT (HCD-GX99 only)

CD player section

System: Compact disc and digital audio system
Laser: Semiconductor laser (λ=770 – 810 nm)
Emission duration: continuous
Frequency response: 20 Hz – 20 kHz
Signal-to-noise ratio: More than 90 dB
Dynamic range: More than 88 dB

Tape deck section (Except for North American model)

Recording system: 4-track 2-channel, stereo

Tuner section

FM stereo, FM/AM superheterodyne tuner
Antenna:
FM lead antenna
AM loop antenna

FM tuner section:
Tuning range
North American model: 87.5 – 108.0 MHz (100 kHz step)
Other models: 87.5 – 108.0 MHz (50 kHz step)
Intermediate frequency: 10.7 MHz

— Continued on next page —

COMPACT DISC DECK RECEIVER

9-887-532-03
2007G16-1
© 2007.07

Sony Corporation
Personal Audio Division
Published by Sony Techno Create Corporation

SONY®

AM tuner section:
Tuning range
Pan-American and Australian models:
530 – 1,710 kHz (with 10 kHz tuning interval)
531 – 1,710 kHz (with 9 kHz tuning interval)
European and Russian models:
531 – 1,602 kHz (with 9 kHz tuning interval)
Other models:
530 – 1,610 kHz (with 10 kHz tuning interval)
531 – 1,602 kHz (with 9 kHz tuning interval)
Intermediate frequency: 450 kHz

General

Power requirements:
North American model: AC 120 V, 60 Hz
European and Russian models: AC 230 V, 50/60 Hz
Australian model: AC 230 – 240 V, 50/60 Hz
Mexican model: AC 127 V, 60 Hz
Argentine model: AC 220 V, 50/60 Hz
Korean model: AC 220 V, 60 Hz
Other models: AC 120, 220 or 230 – 240 V, 50/60 Hz, adjustable with voltage selector

Power consumption:

HCD-GX99
USA model: 190 W
Canadian model: 245 VA

HCD-EC77
USA model: 190 W
Canadian model: 245 VA
European and Russian models: 140 W
0.5 W (in Power Saving Mode)
Other models: 150 W

HCD-EC55
USA model: 95 W
Canadian model: 130 VA
European and Russian models: 95 W
0.5 W (in Power Saving Mode)
Other models: 95 W

Dimensions (w/h/d) (excl. speakers):
Approx. 200 × 306 × 410 mm

Mass (excl. speakers):

HCD-GX99
North American model: Approx. 6.1 kg

HCD-EC77
North American and European models: Approx. 6.1 kg
Other models: Approx. 6.4 kg

HCD-EC55
North American model: Approx. 5.0 kg
Other models: Approx. 5.3 kg

Design and specifications are subject to change without notice.

SAFETY-RELATED COMPONENT WARNING!!

COMPONENTS IDENTIFIED BY MARK ⚠ OR DOTTED LINE WITH MARK ⚠ ON THE SCHEMATIC DIAGRAMS AND IN THE PARTS LIST ARE CRITICAL TO SAFE OPERATION. REPLACE THESE COMPONENTS WITH SONY PARTS WHOSE PART NUMBERS APPEAR AS SHOWN IN THIS MANUAL OR IN SUPPLEMENTS PUBLISHED BY SONY.

ATTENTION AU COMPOSANT AYANT RAPPORT À LA SÉCURITÉ!

LES COMPOSANTS IDENTIFIÉS PAR UNE MARQUE ⚠ SUR LES DIAGRAMMES SCHÉMATIQUES ET LA LISTE DES PIÈCES SONT CRITIQUES POUR LA SÉCURITÉ DE FONCTIONNEMENT. NE REMPLACER CES COM- POSANTS QUE PAR DES PIÈCES SONY DONT LES NUMÉROS SONT DONNÉS DANS CE MANUEL OU DANS LES SUPPLÉMENTS PUBLIÉS PAR SONY.

MODEL IDENTIFICATION
– Back Panel –

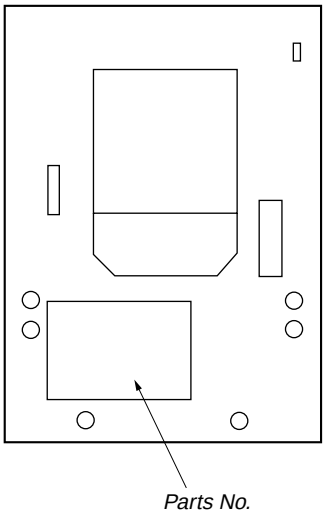

Model	Part No.
GX99: CND model	2-319-061-0□
EC55: CND model	2-893-578-0□
EC55: AEP, UK model	2-893-579-0□
EC55: RU model	2-893-580-0□
EC55: E2 model	2-893-581-0□
EC55: E51 model	2-893-582-0□
EC55: MX model	2-893-583-0□
EC55: AR model	2-893-584-0□
EC55: SP model	2-893-586-0□
EC55: AUS model	2-893-587-0□
EC55: KR model	2-893-588-0□
EC77: CND model	2-893-595-0□
EC77: RU model	2-893-597-0□
EC77: E2 model	2-893-598-0□
EC77: E51 model	2-893-599-0□
EC77: MX model	2-893-600-0□
EC77: AR model	2-893-601-0□
EC77: AUS model	2-893-604-0□
EC55: US model	3-095-136-0□
EC77: AEP model	3-095-137-0□
EC77: E3 model	3-095-138-0□
GX99: US model	3-095-139-0□
EC77: US model	3-095-495-0□

- Abbreviation
  AR : Argentine model
  AUS : Australian model
  CND : Canadian model
  E2 : 120 V AC area in E model
  E3 : 240 V AC area in E model
  E51 : Chilean and Peruvian models
  KR : Korean model
  MX : Mexican model
  RU : Russian model
  SP : Singapore model

TABLE OF CONTENTS

1. SERVICING NOTES 4

2. GENERAL 6

3. DISASSEMBLY
3-1. Disassembly Flow 8
3-2. Side Panel (R), Side Panel (L) 9
3-3. Top Panel Assy (Except US, CND) 10
3-4. Top Panel (US, CND) 10
3-5. Front Panel Assy 11
3-6. Mechanical Deck (Except US, CND) 12
3-7. Belt (MAIN), Belt (R/F) (Except US, CND) 12
3-8. KEY-LEFT Board 13
3-9. KEY-RIGHT Board, KEY-CD Board, PANEL Board 13
3-10. JACK Board 14
3-11. MAIN Board 15
3-12. CD Mechanical 16
3-13. Optical Pick-up (KSM-213DCP), BD90 Board 17
3-14. Belt (DLM3A) 18
3-15. Chassis 18
3-16. PT Board (Except EC55:US, CND),
PT (U) Board (EC55:US, CND), Power Transformer 19
3-17. LOW-AMP Board, HI-AMP Board (EC77/GX99) 19
3-18. HI-AMP Board (EC55) 20
3-19. DC Fan 20

4. TEST MODE 21

5. MECHANICAL ADJUSTMENTS 25

6. ELECTRICAL ADJUSTMENTS 25

7. DIAGRAMS
7-1. Block Diagram — BD/DRIVER Section — 30
7-2. Block Diagram — TUNER Section — 31
7-3. Block Diagram — MAIN Section — 32
7-4. Printed Wiring Board — BD90 Board — 33
7-5. Schematic Diagram — BD90 Board — 34
7-6. Printed Wiring Boards — MAIN Section — 35
7-7. Schematic Diagram — MAIN Section (1/2) — 36
7-8. Schematic Diagram — MAIN Section (2/2) — 37
7-9. Printed Wiring Board — PANEL Board — 38
7-10. Schematic Diagram — PANEL Board — 39
7-11. Printed Wiring Boards — KEY Section — 40
7-12. Schematic Diagram — KEY Section — 40
7-13. Printed Wiring Board — HI-AMP Board — 41
7-14. Schematic Diagram — HI-AMP Board — 42
7-15. Printed Wiring Board
— LOW-AMP Board (EC77/GX99) — 43
7-16. Schematic Diagram
— LOW-AMP Board (EC77/GX99) — 44
7-17. Printed Wiring Boards
— DECK Section (Except US,CND) — 45
7-18. Schematic Diagram
— DECK Section (Except US,CND) — 45
7-19. Printed Wiring Board
— PT Board (Except EC55: US,CND) — 46
7-20. Schematic Diagram
— PT Board (Except EC55: US,CND) — 46
7-21. Printed Wiring Board
— PT (U) Board (EC55: US,CND) — 47
7-22. Schematic Diagram
— PT (U) Board (EC55: US,CND) — 47

8. EXPLODED VIEWS
8-1. Overall Section 57
8-2. Front Panel Section 58
8-3. Chassis Section (EC77/GX99) 59
8-4. Chassis Section (EC55) 60
8-5. Top Section (Except US, CND) 61
8-6. CD Mechanism Deck Section 62

9. ELECTRICAL PARTS LIST 63

SECTION 1
SERVICING NOTES

CAUTION
Use of controls or adjustments or performance of procedures other than those specified herein may result in hazardous radiation exposure.

Notes on chip component replacement
- Never reuse a disconnected chip component.
- Notice that the minus side of a tantalum capacitor may be damaged by heat.

Flexible Circuit Board Repairing
- Keep the temperature of the soldering iron around 270 °C during repairing.
- Do not touch the soldering iron on the same conductor of the circuit board (within 3 times).
- Be careful not to apply force on the conductor when soldering or unsoldering.

SAFETY CHECK-OUT
After correcting the original service problem, perform the following safety check before releasing the set to the customer:
Check the antenna terminals, metal trim, "metallized" knobs, screws, and all other exposed metal parts for AC leakage.
Check leakage as described below.

LEAKAGE TEST
The AC leakage from any exposed metal part to earth ground and from all exposed metal parts to any exposed metal part having a return to chassis, must not exceed 0.5 mA (500 microamperes.). Leakage current can be measured by any one of three methods.
1. A commercial leakage tester, such as the Simpson 229 or RCA WT-540A. Follow the manufacturers' instructions to use these instruments.
2. A battery-operated AC milliammeter. The Data Precision 245 digital multimeter is suitable for this job.
3. Measuring the voltage drop across a resistor by means of a VOM or battery-operated AC voltmeter. The "limit" indication is 0.75 V, so analog meters must have an accurate low-voltage scale. The Simpson 250 and Sanwa SH-63Trd are examples of a passive VOM that is suitable. Nearly all battery operated digital multimeters that have a 2 V AC range are suitable. (See Fig. A)

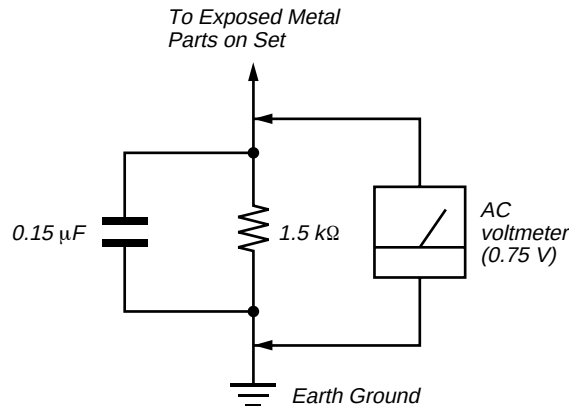

Fig. A. Using an AC voltmeter to check AC leakage.

This appliance is classified as a CLASS 1 LASER product. The CLASS 1 LASER PRODUCT MARKING is located on the rear exterior. (Except for Korean model)

Laser component in this product is capable of emitting radiation exceeding the limit for Class 1.

NOTES ON HANDLING THE OPTICAL PICK-UP BLOCK OR BASE UNIT
The laser diode in the optical pick-up block may suffer electrostatic break-down because of the potential difference generated by the charged electrostatic load, etc. on clothing and the human body.
During repair, pay attention to electrostatic break-down and also use the procedure in the printed matter which is included in the repair parts.
The flexible board is easily damaged and should be handled with care.

NOTES ON LASER DIODE EMISSION CHECK
The laser beam on this model is concentrated so as to be focused on the disc reflective surface by the objective lens in the optical pick-up block. Therefore, when checking the laser diode emission, observe from more than 30 cm away from the objective lens.

LASER DIODE AND FOCUS SEARCH OPERATION CHECK
Carry out the "S curve check" in "CD section adjustment" and check that the S curve waveforms is output three times.

UNLEADED SOLDER
Boards requiring use of unleaded solder are printed with the lead-free mark (LF) indicating the solder contains no lead.
(Caution: Some printed circuit boards may not come printed with the lead free mark due to their particular size)

: LEAD FREE MARK
Unleaded solder has the following characteristics.
- Unleaded solder melts at a temperature about 40 °C higher than ordinary solder.
  Ordinary soldering irons can be used but the iron tip has to be applied to the solder joint for a slightly longer time.
  Soldering irons using a temperature regulator should be set to about 350 °C.
  Caution: The printed pattern (copper foil) may peel away if the heated tip is applied for too long, so be careful!
- Strong viscosity
  Unleaded solder is more viscou-s (sticky, less prone to flow) than ordinary solder so use caution not to let solder bridges occur such as on IC pins, etc.
- Usable with ordinary solder
  It is best to use only unleaded solder but unleaded solder may also be added to ordinary solder.

CAUTION

When carrying this system

1 Remove all discs to protect the CD mechanism.

2 Hold down CD ▶II (play/pause) on the unit, and press I/⏻ until "STANDBY" appears.

3 After "LOCK" appears, unplug the power cord.

HOW TO OPEN THE DISC TRAY WHEN POWER SWITCH TURNS OFF

Turn the bottom rib (not the gear) with a flathead screwdriver in the direction of arrow A, and draw out the tray in the direction of arrow B.

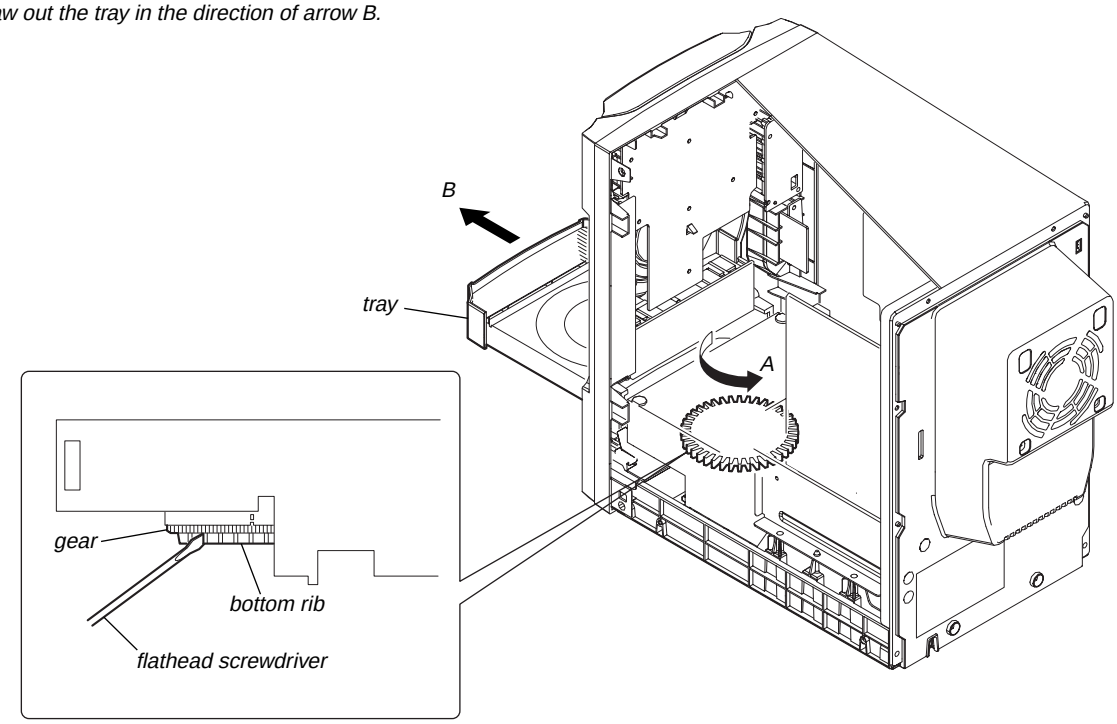

SECTION 2
GENERAL

This section is extracted from instruction manual.

Basic Operations

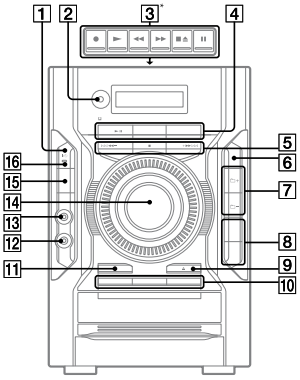

* Except for North American model

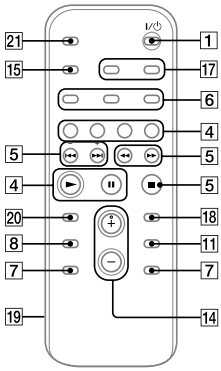

Before using the system

To use the remote

Slide and remove the battery compartment lid 19, and insert the two R6 (size AA) batteries (supplied), ⊖ side first, matching the polarities shown below.

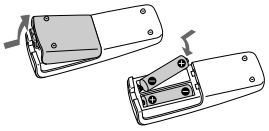

Notes on using the remote

- With normal use, the batteries should last for about six months.
- Do not mix an old battery with a new one or mix different types of batteries.
- If you do not use the remote for a long period of time, remove the batteries to avoid damage from battery leakage and corrosion.
- Batteries installed devices shall not be exposed to excessive heat such as sunshine, fire or the like.

To set the clock

1 Turn on the system.
Press I/⏻ (on/standby) 1.

2 Select the clock set mode.
Press CLOCK/TIMER SET 17 on the remote. If the current mode appears on the display, press ⏮/⏭ 5 on the remote repeatedly to select "CLOCK," and then press ENTER 18 on the remote.

3 Set the time.
Press ⏮/⏭ 5 on the remote repeatedly to set the hour, and then press ENTER 18 on the remote. Use the same procedure to set the minutes.
The clock settings are lost when you disconnect the power cord or if a power failure occurs.

Selecting a music source

Press the following buttons (or press FUNCTION 4 repeatedly).

To select	Press
CD	CD 4 on the remote.
Tuner	TUNER/BAND 4.
Tape[1]	TAPE 4 on the remote.
Component[2] (connected using an audio cord)	FUNCTION repeatedly (or AUDIO IN[3] on the remote) 4 until "AUDIO IN" appears.

[1] Except for North American model.
[2] If the component has the AVLS (Automatic Volume Limiter System) or BASS BOOST function, turn off the function to avoid distorted sound from the speakers.
[3] North American model only.

Adjusting the sound

To adjust the volume

Press VOLUME +/– on the remote (or turn the VOLUME control on the unit) 14.

To add a sound effect

To	Press
Generate a more dynamic sound (Dynamic Sound Generator X-tra)	DSGX 8 on the unit.
Set the sound effect	EQ 8.

To turn on the subwoofer (HCD-GX99 only)

Press SUBWOOFER ON/OFF in the lower part of the subwoofer until the indicator on the subwoofer lights up.

* To adjust the sound output level for the subwoofer, turn the SUBWOOFER LEVEL in the lower part of the subwoofer. Once you have made the adjustment, the overall sound level can be adjusted using VOLUME +/– on the remote (or turn the VOLUME control on the unit) 14.

Playing a CD/MP3 disc

1 Select the CD function.
Press CD on the remote (or FUNCTION repeatedly) 4.

2 Place a disc.
Press ⏏ (open/close) 9 on the unit, and place a disc with the label side up on the disc tray. To place additional discs, slide the disc tray with your finger as shown below.
To close the disc tray, press ⏏ (open/close) 9 on the unit.
Do not force the disc tray closed with your finger, as this may damage the unit.

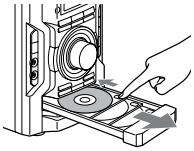

3 Select a disc.
If the discs are currently stopped, press DISC SKIP on the remote (or DISC SKIP/EX-CHANGE on the unit) 11. To change discs while in other functions, press DISC 1 – 3 10 on the unit.

4 Start playback.
Press ▶ (play) (or CD ▶II (play/pause) on the unit) 4.
To exchange other discs during playback, press DISC SKIP/EX-CHANGE 11 on the unit.

To	Press
Pause playback	II (pause) on the remote (or CD ▶II on the unit) 4. To resume play, press the button again.
Stop playback	■ (stop) 5.
Select a folder on an MP3 disc	🗀 +/– 7.
Select a track or file	⏮/⏭ (go back/go forward) on the remote (⏮/⏭ on the unit) 5.
Find a point in a track or file	Hold down ◀◀/▶▶ (rewind/fast forward) 5 during playback, and release the button at the desired point.
Select Repeat Play	REPEAT 6 on the remote repeatedly until "REP" or "REP1" appears.

To change the play mode

Press PLAY MODE 6 repeatedly while the player is stopped. You can select normal play (no display for all discs or "1 DISC" for a disc or "🗀" for all MP3 files in the folder on the disc), shuffle play ("SHUF" for all discs shuffle, "1 DISC SHUF" for one disc shuffle or "🗀 SHUF*" for folder shuffle), or program play ("PGM").

* When playing a CD-DA disc, 🗀 (SHUF) Play performs the same operation as 1 DISC (SHUF) Play.

Notes on Repeat Play

- All tracks or files on a disc are played repeatedly up to five times.
- You cannot select "REP" and "SHUF" (all discs shuffle) at the same time.
- "REP1" indicates that a single track or file is repeated until you stop it.

Notes on playing MP3 discs

- Do not save other types of tracks or files or unnecessary folders on a disc that has MP3 files.
- Folders that have no MP3 files are skipped.
- MP3 files are played back in the order that they are recorded onto the disc.
- The system can only play MP3 files that have a file extension of ".MP3".
- If there are files on the disc that have the ".MP3" file extension, but that are not MP3 files, the unit may produce noise or may malfunction.
- The maximum number of:
  - loadable sessions on a single disc is 10.
  - folders is 150 (including the root folder).
  - MP3 files is 255.
  - MP3 files and folders that can be contained on a single disc is 300.
  - folder levels (the tree structure of files) is eight.
- Compatibility with all MP3 encoding/writing software, recording device, and recording media cannot be guaranteed. Incompatible MP3 discs may produce noise or interrupted audio or may not play at all.

Notes on playing multisession discs

- If the disc begins with a CD-DA (or MP3) session, it is recognized as a CD-DA (or MP3) disc, and playback continues until another session is encountered.
- A disc with a mixed CD format is recognized as a CD-DA (audio) disc.

Listening to the radio

1 Select "FM" or "AM."
Press TUNER/BAND 4 repeatedly.

2 Select the tuning mode.
Press TUNING MODE 6 repeatedly until "AUTO" appears.

3 Tune in the desired station.
Press +/– on the remote (or TUNING + or – on the unit) 5.
Scanning stops automatically when a station is tuned in, and then "TUNED" and "STEREO" (for stereo programs) appear.

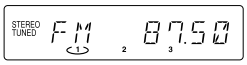

To stop automatic scanning

Press ■ (stop) 5.

To tune in a station with a weak signal

If "TUNED" does not appear and the scanning does not stop, press TUNING MODE 6 repeatedly until "MANUAL" appears and press +/– on the remote (or TUNING + or – on the unit) 5 repeatedly to tune in the desired station.

To reduce static noise on a weak FM stereo station

Press FM MODE 6 on the remote repeatedly until "MONO" appears to turn off stereo reception.

Playing a tape (Except for North American model)

1 Select a tape function.
Press TAPE on the remote (or FUNCTION on the unit repeatedly) 4.

2 Insert a tape.
Press ■⏏ (stop/eject) 3 on the unit, and insert the tape into the cassette holder. Make sure there is no slack in the tape to avoid damaging the tape or the tape deck.

3 Start playback.
Press ▶ (play) 3 on the unit.

To	Press
Pause playback	II (pause) 3 on the unit. To resume play, press the button again.
Stop playback	■⏏ (stop/eject) 3 on the unit.
Rewind or fast forward*	◀◀/▶▶ 3 on the unit.

* Be sure to press ■⏏ (stop/eject) 3 on the unit after the tape has been wound or rewound to the end.

Note

Do not turn off the system during playback or recording.

Changing the display

To	Press
Change information on the display*	DISPLAY 15 repeatedly when the system is turned on.
Change Display mode (See below.)	DISPLAY 15 repeatedly when the system is turned off.

* For example, you can view CD/MP3 disc information, such as the track or file number or folder name during normal play, or the total playing time while the player is stopped.

The system offers the following display modes.

Display mode	When the system is off[1],
Power Saving Mode[2]	The display is turned off to conserve power. The timer and clock continue to operate.
Clock[3]	The clock is displayed.

[1] The STANDBY indicator 16 on the unit lights up when the system is off.
[2] You cannot set the clock in Power Saving Mode.
[3] The clock display automatically turns to Power Saving Mode after eight seconds.

Notes on the display information

- Characters that cannot be displayed appear as "_".
- The following are not displayed;
  - total playing time for an MP3 disc.
  - remaining playing time for an MP3 file.
- The following are not displayed correctly;
  - elapsed playing time of an MP3 file encoded using a VBR (variable bit rate).
  - folder and file names that do not follow either the ISO9660 Level 1, Level 2 or Joliet in the expansion format.
- The following are displayed;
  - total playing time for a CD-DA disc when the play mode is "1 DISC".
  - remaining playing time for a track.
  - ID3 tag information for MP3 files when ID3 version 1 and version 2 tags are used (ID3 version 2 tag information display has priority when both ID3 version 1 and version 2 tags are used for a single MP3 file).
  - up to 15 characters of ID3 tag information using uppercase letters (A to Z), numbers (0 to 9), and symbols ('< > * + , – / @ [\ ] _).

Using optional audio components

To connect an optional headphones
Connect headphones to the PHONES jack 12 on the unit.

To connect an optional component
Connect additional audio source components to the AUDIO IN jack 13 on the unit using an analog audio cord (not supplied). Turn down the volume on the system, and then select the AUDIO IN function.

Other Operations

Creating your own CD program (Program Play)

Use buttons on the remote to create your own program.

1. Press CD 4 to select the CD function.
2. Press PLAY MODE 6 repeatedly until "PGM" appears while the player is stopped.
3. Press DISC SKIP 11 to select a disc.
4. Press ⏮/⏭ (or ⏮/⏭ on the unit) 5 repeatedly until the desired track number appears.
   When programing MP3 files, press 🗀 +/– 7 repeatedly to select the desired folder, and then select the desired file.

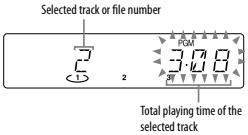

5. Press ENTER 18 to add the track or file to the program.
6. Repeat steps 3 through 5 to program additional tracks or files, up to a total of 25 tracks or files.
7. To play your program of tracks or files, press ▶ (or CD ▶II on the unit) 4.
   The program remains available until you open the disc tray. To play the same program again, select the CD function, and press ▶ (or CD ▶II on the unit) 4.

To cancel Program Play
Press PLAY MODE 6 repeatedly until "PGM" disappears while the player is stopped.

To delete the last track or file of the program
Press CLEAR 20 on the remote while the player is stopped.

To view program information, such as total track number of the program
Press DISPLAY 15 repeatedly.

Presetting radio stations

You can preset your favorite radio stations and tune them in instantly by selecting the corresponding preset number.

1. Tune in the desired station (See "Listening to the radio").
2. Press TUNER MEMORY 6 on the remote.

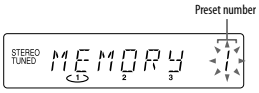

3. Press +/– (or TUNING + or – on the unit) 5 repeatedly to select your desired preset number.
   If another station is already assigned to the selected preset number, the station is replaced by the new stations.
4. Press ENTER 18 on the remote.
5. Repeat steps 1 through 4 to store other stations.
   You can preset up to 20 FM and 10 AM stations. The preset stations are retained for about half a day even if you disconnect the power cord or if a power failure occurs.
6. To call up a preset radio station, press TUNING MODE 6 repeatedly until "PRESET" appears, and then press +/– (or TUNING + or – on the unit) 5 repeatedly to select the desired preset number.

Recording onto a tape (Except for North American model)

Use a TYPE I (normal) tape only.

You can record just the portions you like from a sound source, including connected audio components.

Use buttons on the unit to control tape recording.

1. Insert a recordable tape into the cassette holder with the side you want to record facing up.
2. Prepare the recording source.
   Select the desired source to record.
   Place the disc you want to record and press DISC SKIP/EX-CHANGE 11 to select a disc.
   When recording a folder from an MP3 disc, press PLAY MODE 6 repeatedly to select "🗀," and then press 🗀 +/– 7 repeatedly to select the desired folder.
   To record only your favorite CD tracks or MP3 files in your desired order, perform steps 2 to 5 of "Creating your own CD program."
3. Start recording.
   Press ● (record) 3, and then start playing the desired recording source.
   The CD starts playing automatically after 10 seconds have passed.
   If there is noise while recording from the tuner, reposition the appropriate antenna to reduce the noise.
   While recording, you cannot listen to other sources.

To stop recording
Press ■⏏ 3.

Tip
We recommend that you press ❚❚ 3 first, and then press ■⏏ 3 to avoid noise being recorded when you stop recording.

Using the timers

The system offers two timer functions. If you use both timers, the Sleep Timer has priority.

Sleep Timer:
You can fall asleep to music. This function works even if the clock is not set.
Press SLEEP 21 on the remote repeatedly. If you select "AUTO," the system automatically turns off after the current disc or tape stops or in 100 minutes.
If the tape deck is still playing or recording at the set time, the system turns off after the tape deck stops.

Play Timer:
You can wake up to CD or tuner at a preset time.

Use buttons on the remote to control the Play Timer. Make sure you have set the clock.

1. Prepare the sound source.
   Prepare the sound source, and then press VOLUME +/– 14 to adjust the volume.
   To start from a specific CD track or MP3 file, create your own CD program.
2. Press CLOCK/TIMER SET 17.
3. Press ⏮/⏭ 5 repeatedly to select "PLAY," and then press ENTER 18.
   "ON TIME" appears, and the hour indication flashes.
4. Set the time to start playing.
   Press ⏮/⏭ 5 repeatedly to set the hour, and then press ENTER 18.
   The minute indication flashes. Use the procedure above to set the minutes.
5. Use the same procedure as in step 4 to set the time to stop playing.
6. Select the sound source.
   Press ⏮/⏭ 5 repeatedly until the desired sound source appears, and then press ENTER 18. The display shows the timer settings.
7. Press I/⏻ 1 to turn off the system.
   If the system is on at the preset time, the Play Timer will not play.

To activate or check the timer again
Press CLOCK/TIMER SELECT 17, press ⏮/⏭ 5 repeatedly until "PLAY SEL" appears, and then press ENTER 18.

To cancel the timer
Repeat the same procedure as above until "OFF" appears, and then press ENTER 18.

To change the setting
Start over from step 1.

Tip
The Play Timer setting remains as long as the setting is not canceled manually.

SECTION 3
DISASSEMBLY

3-1. DISASSEMBLY FLOW

- This set can be disassembled in the order shown below.

Note: Follow the disassembly procedure in the numerical order given.

3-2. SIDE PANEL (R), SIDE PANEL (L)

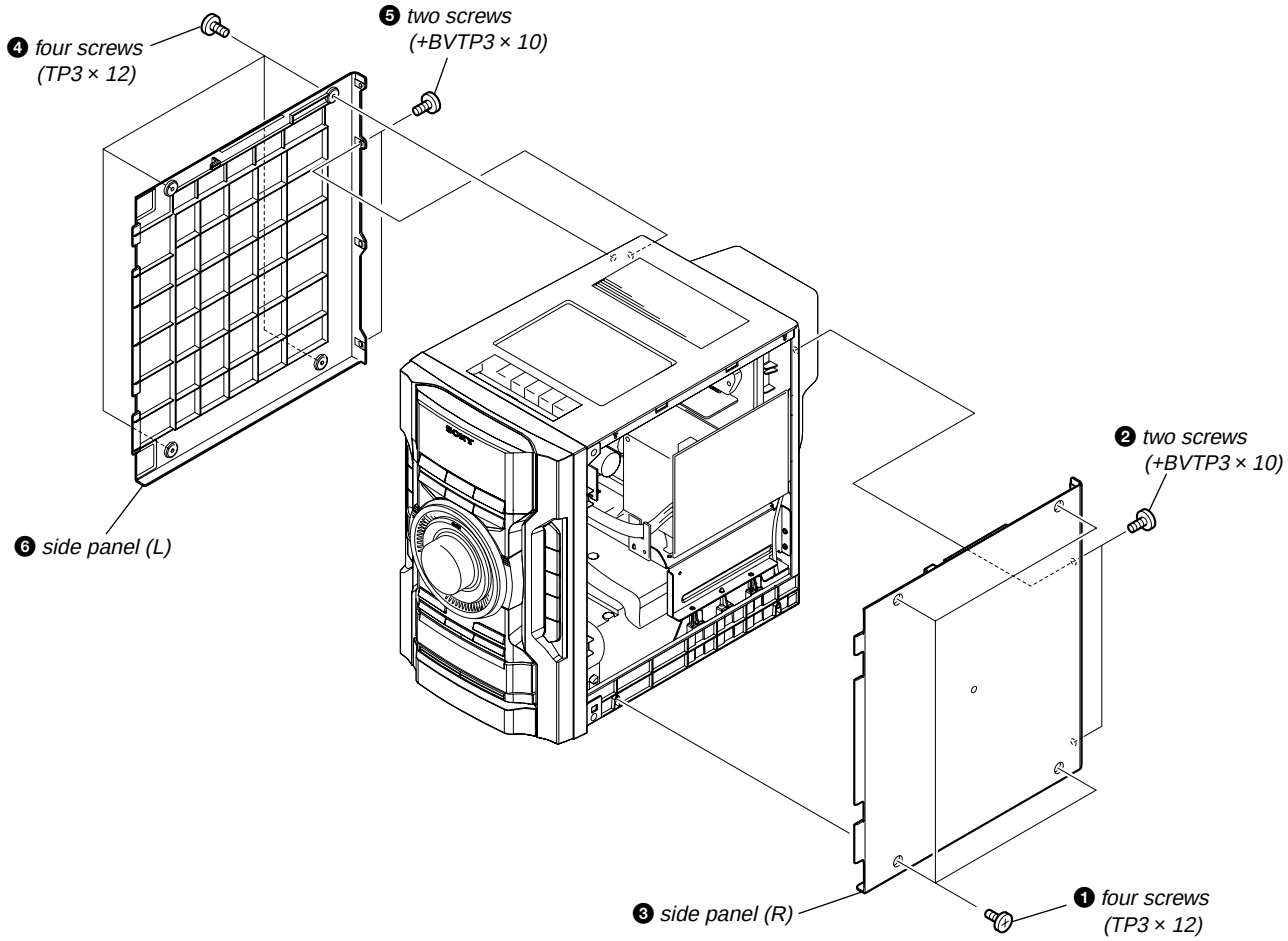

3-3. TOP PANEL ASSY (EXCEPT US, CND)

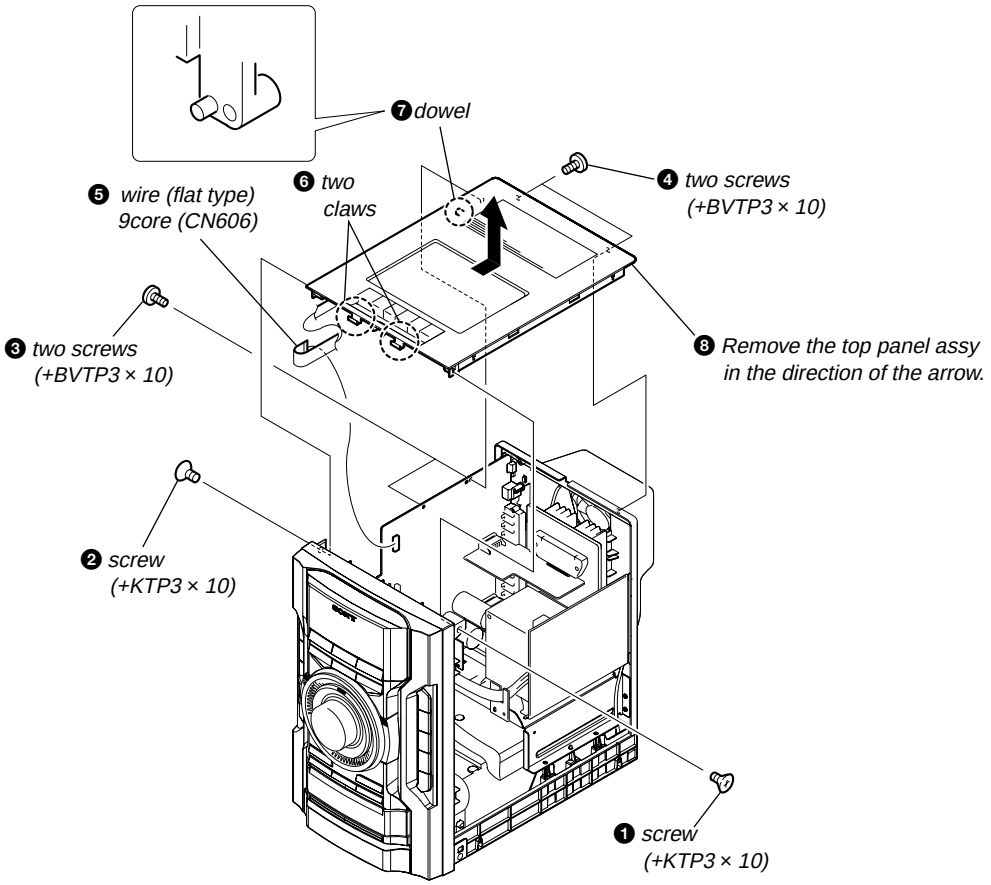

3-4. TOP PANEL (US, CND)

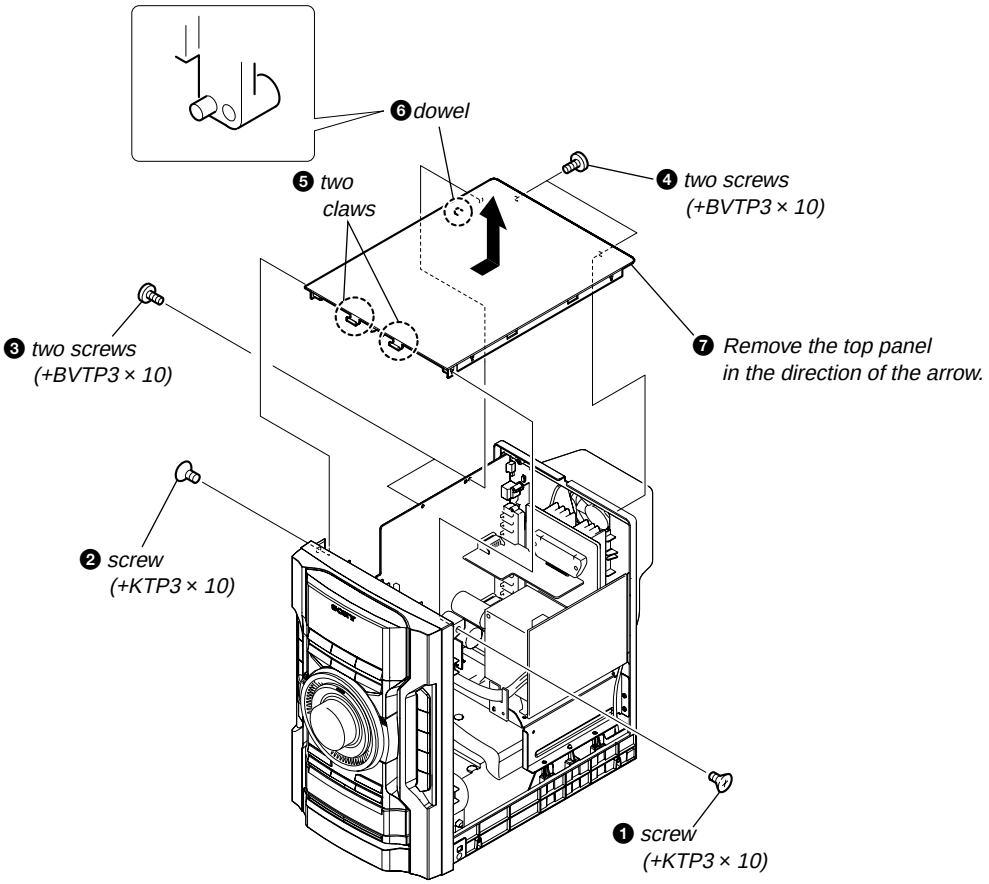

3-5. FRONT PANEL ASSY

❶ *Turn the bottom rib (not the gear) with a flathead screwdriver in the direction of arrow A, and draw out the tray in the direction of arrow B.*

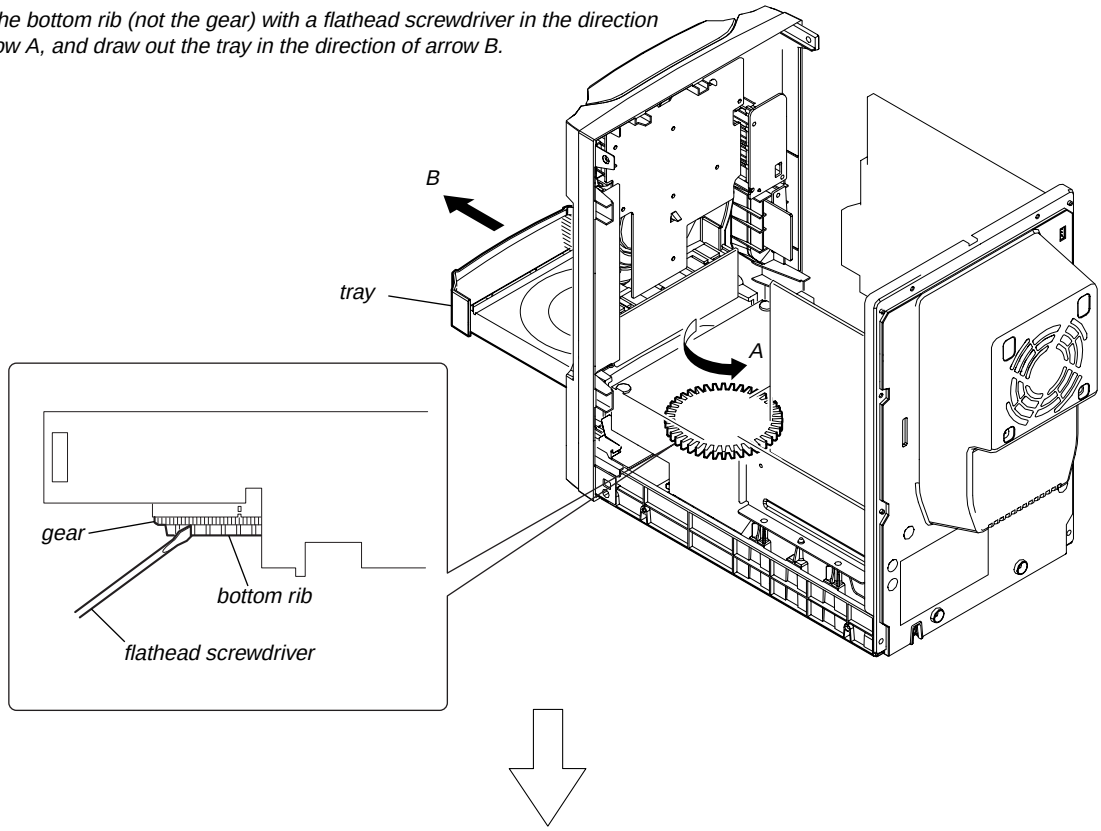

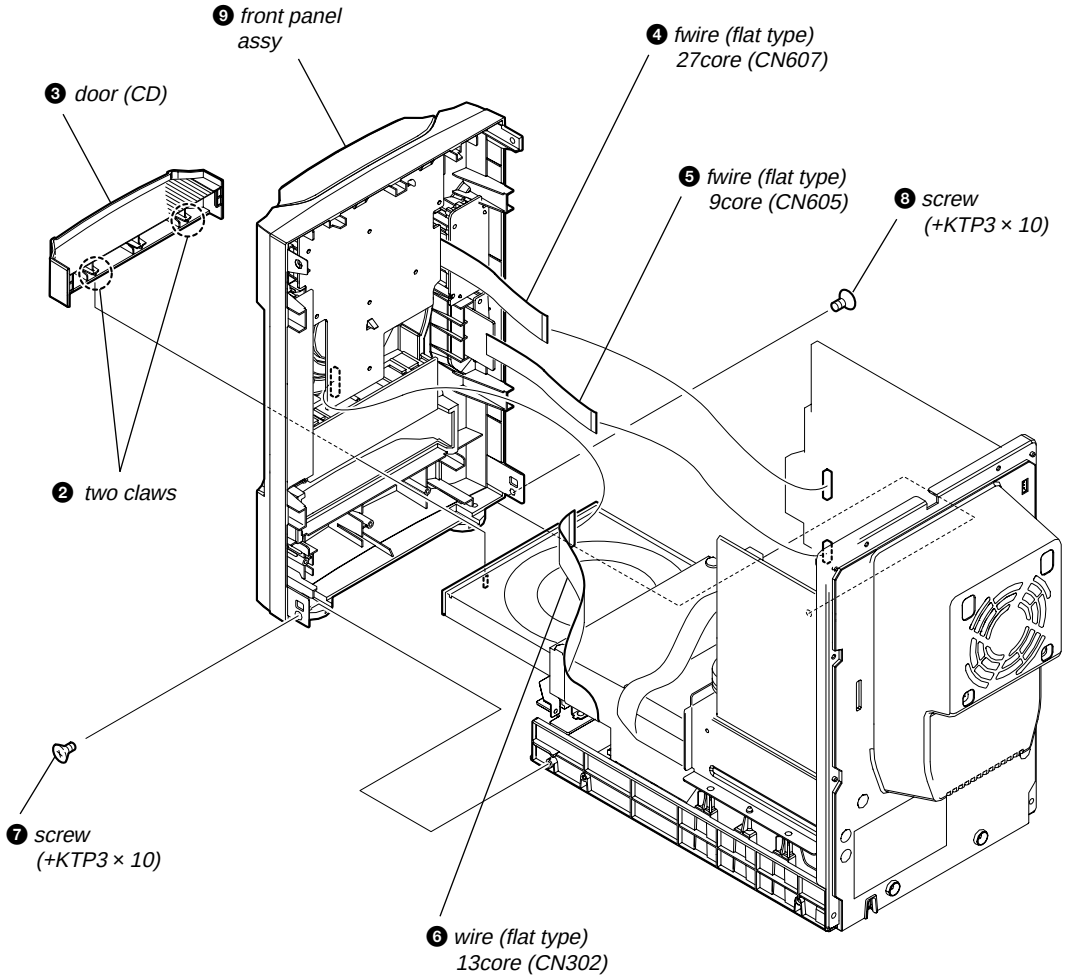

3-6. MECHANICAL DECK (EXCEPT US, CND)

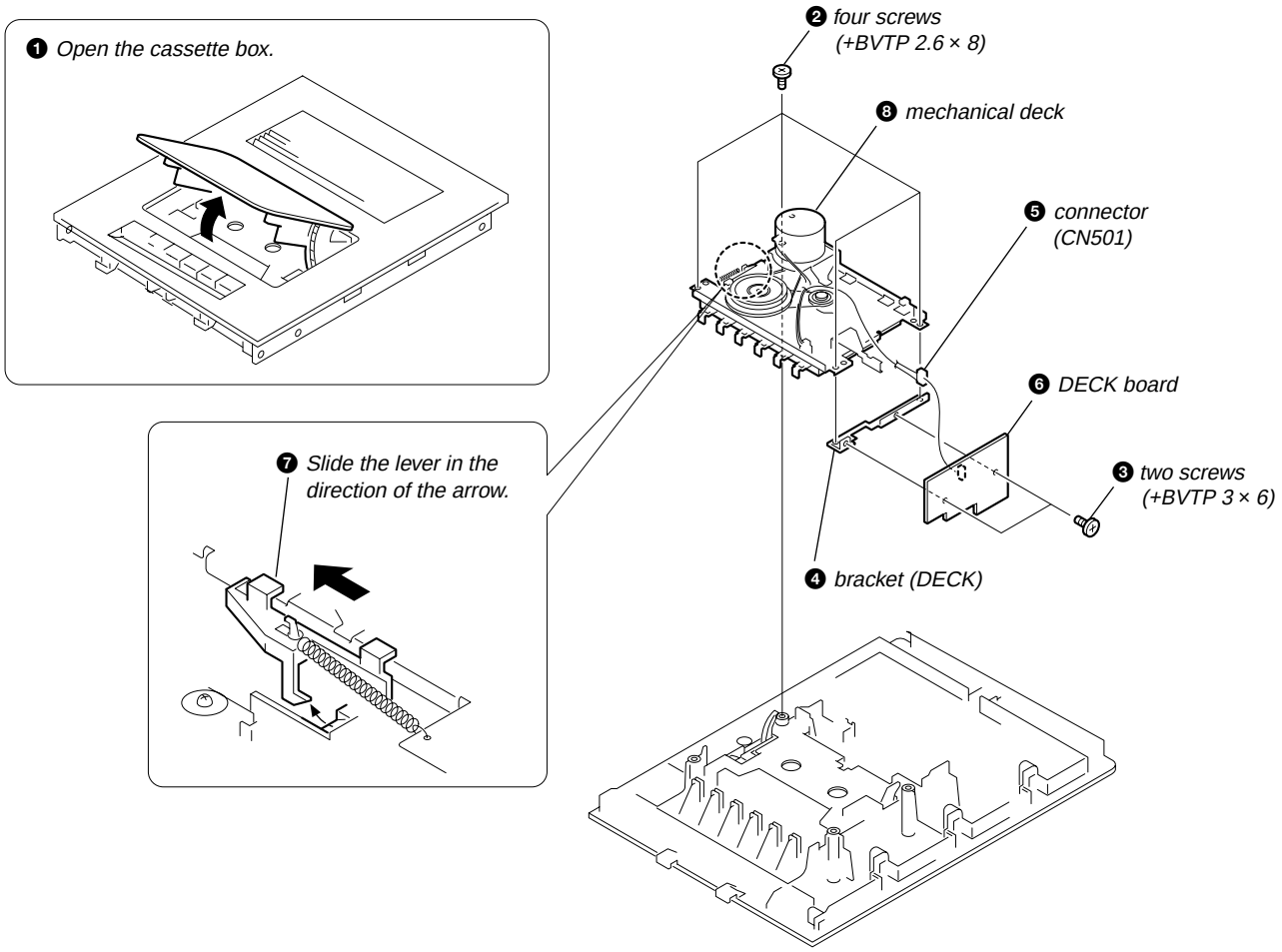

3-7. BELT (MAIN), BELT (R/F) (EXCEPT US, CND)

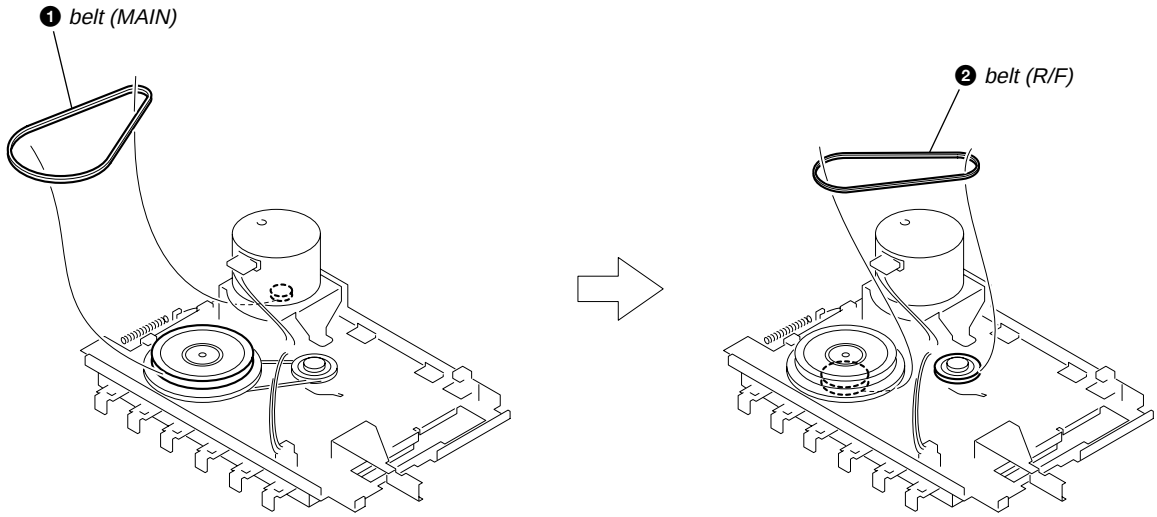

3-8. KEY-LEFT BOARD

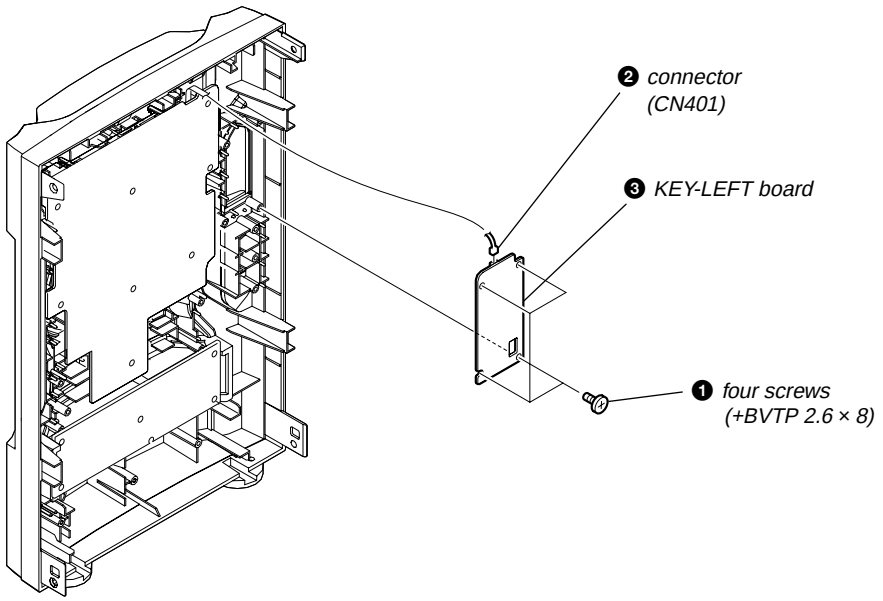

3-9. KEY-RIGHT BOARD, KEY-CD BOARD, PANEL BOARD

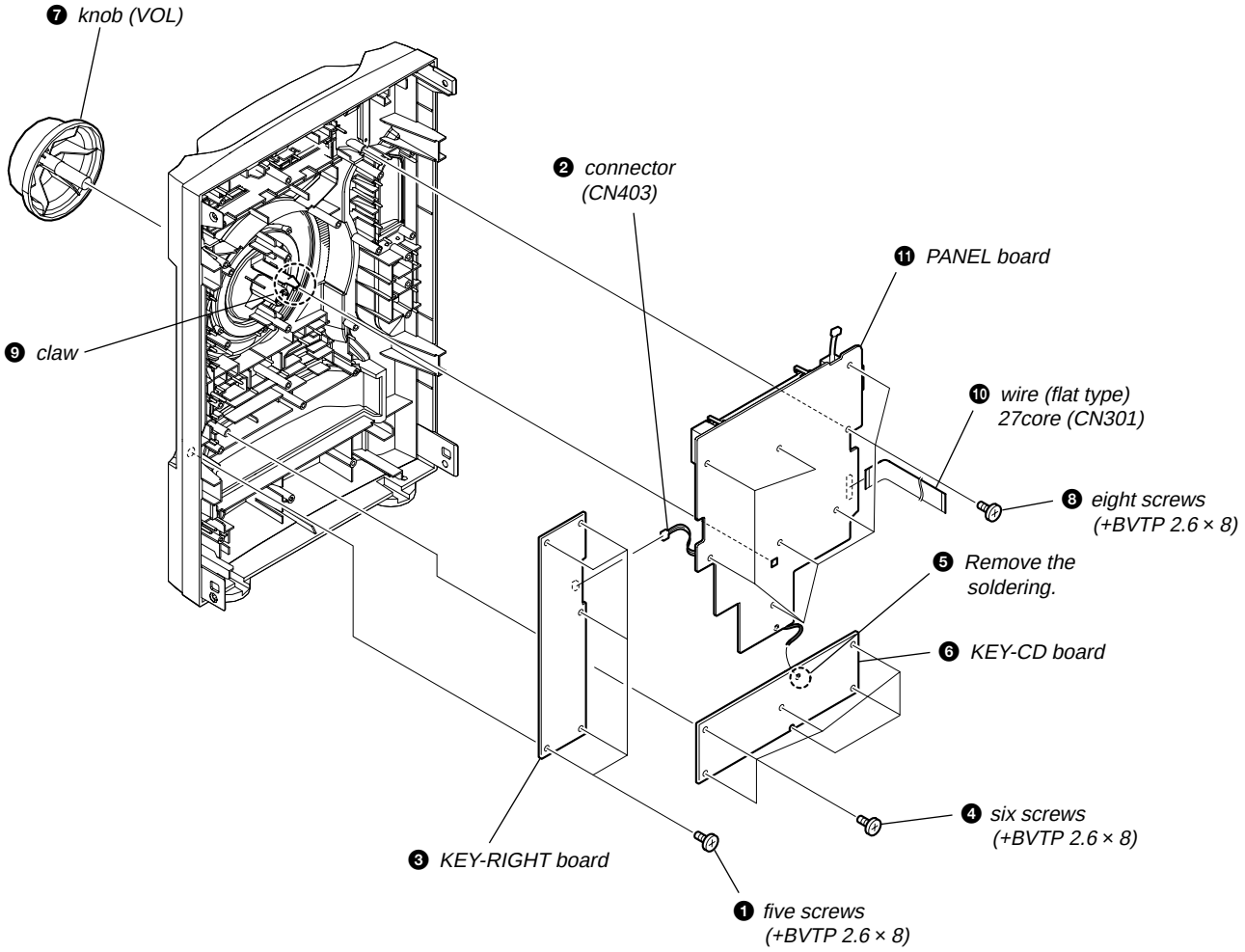

3-10. JACK BOARD

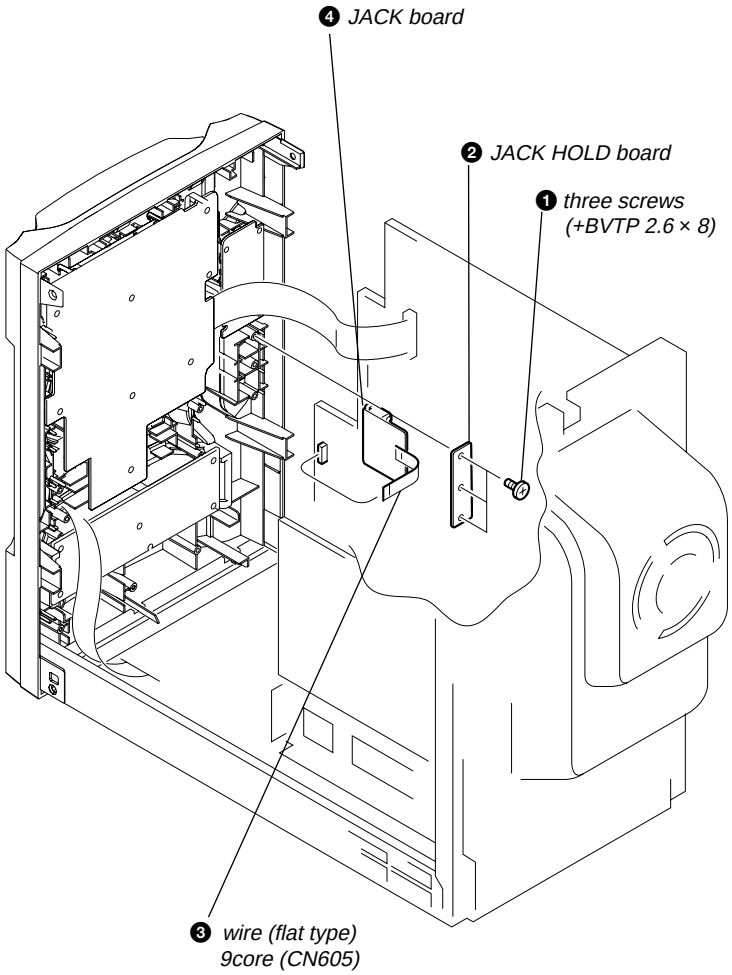

3-11. MAIN BOARD

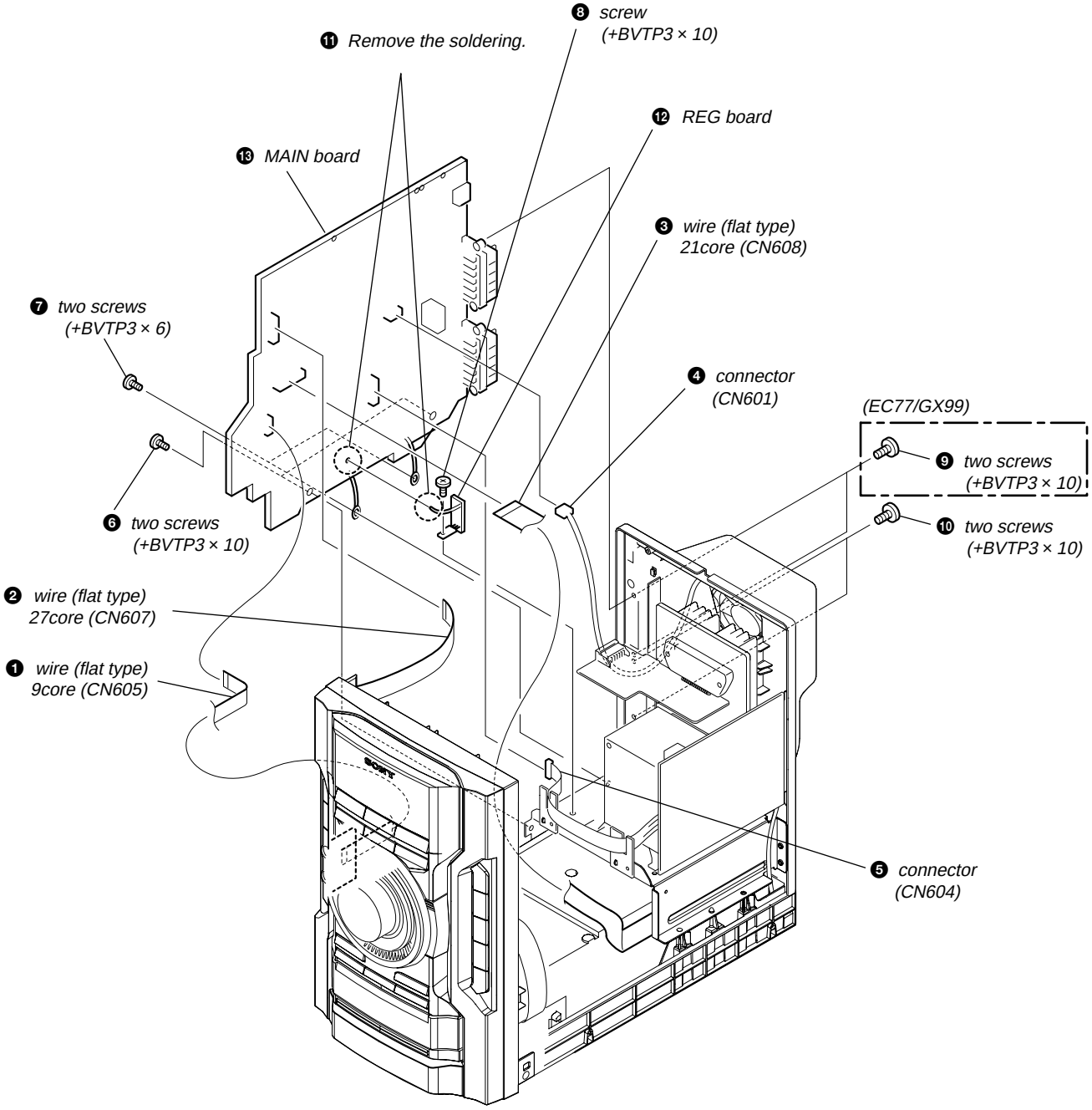

3-12. CD MECHANICAL

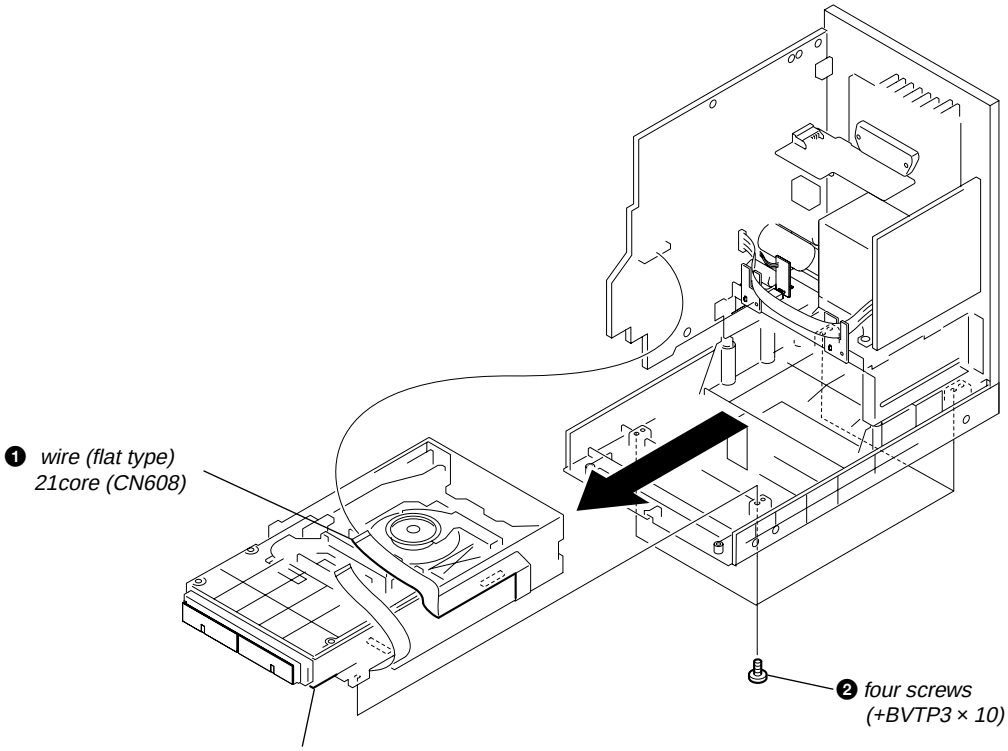

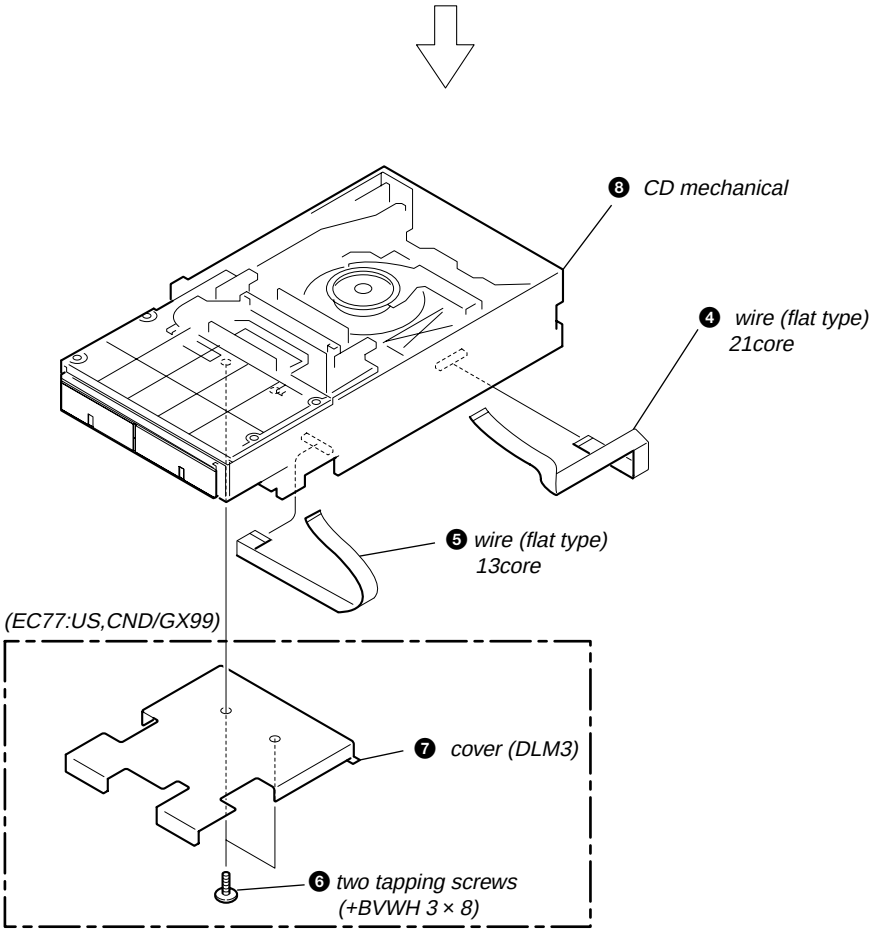

3-13. OPTICAL PICK-UP (KSM-213DCP), BD90 BOARD

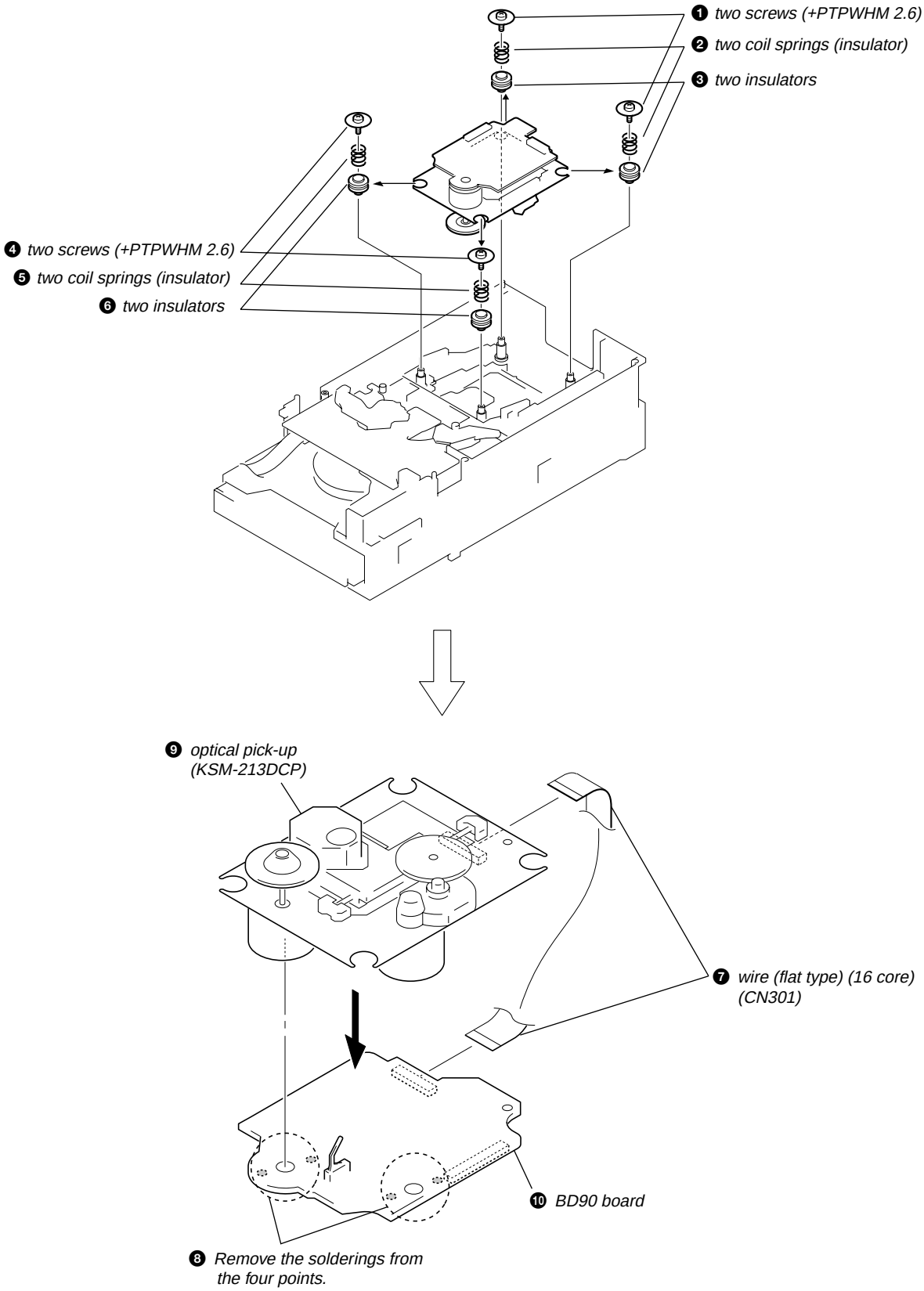

3-14. BELT (DLM3A)

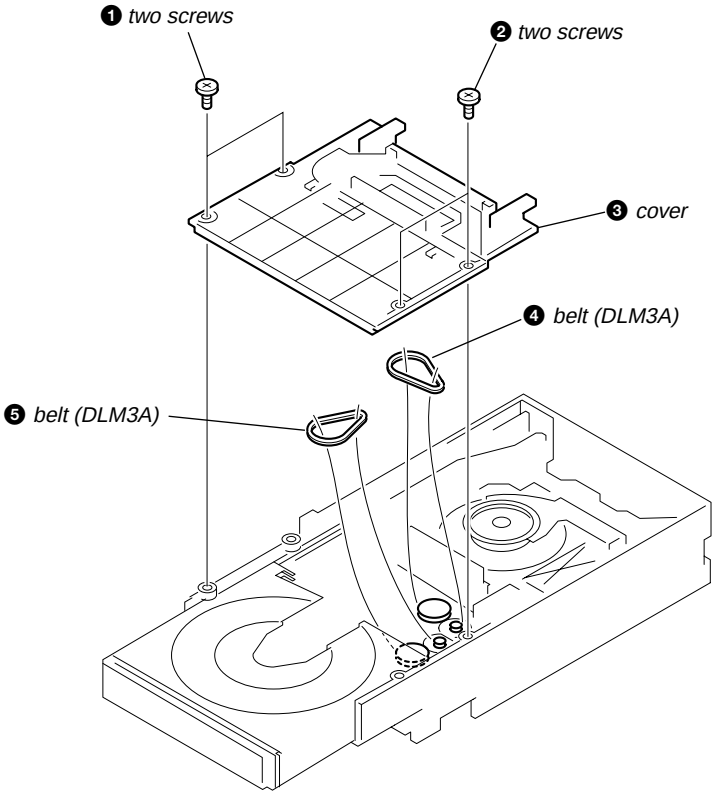

3-15. CHASSIS

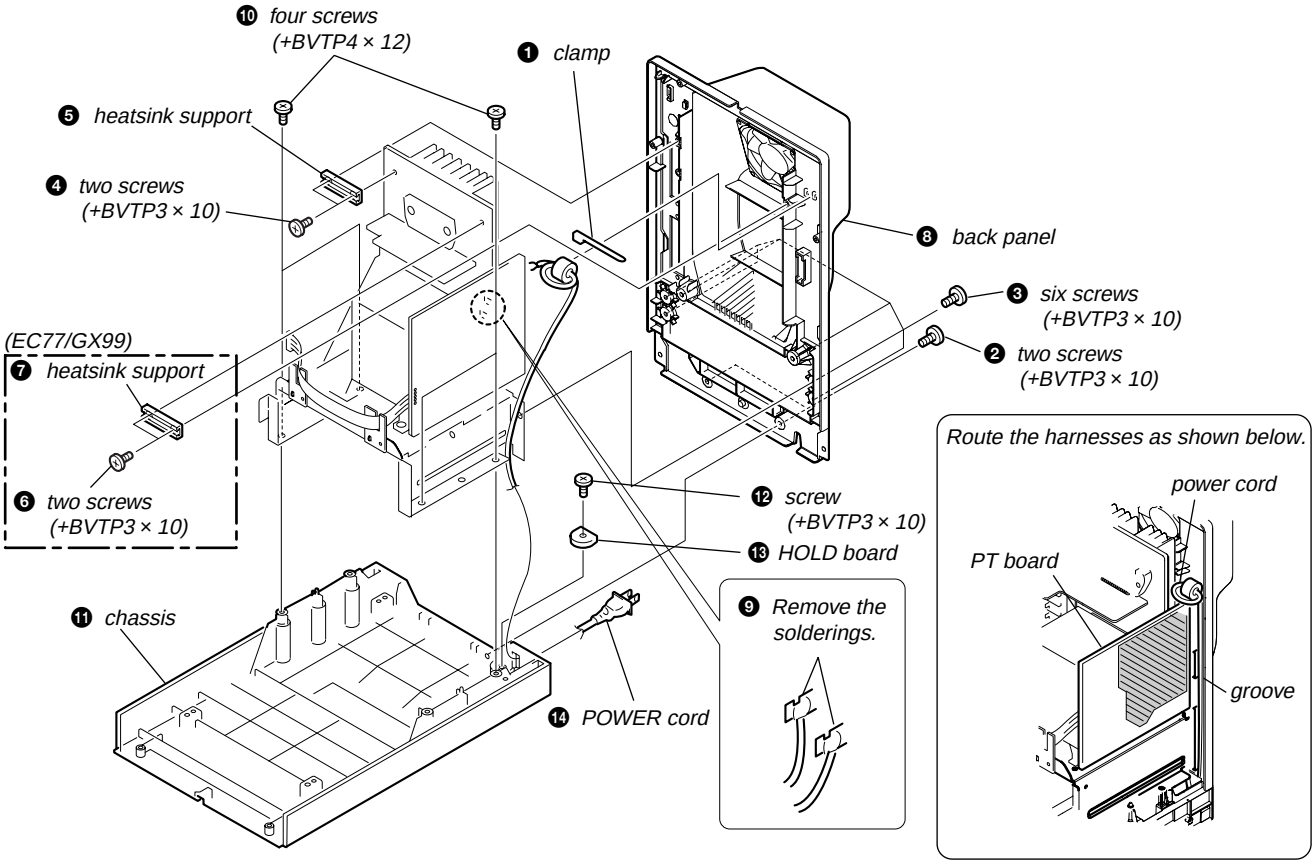

3-16. PT BOARD (EXCEPT EC55:US, CND), PT (U) BOARD (EC55:US, CND), POWER TRANSFORMER

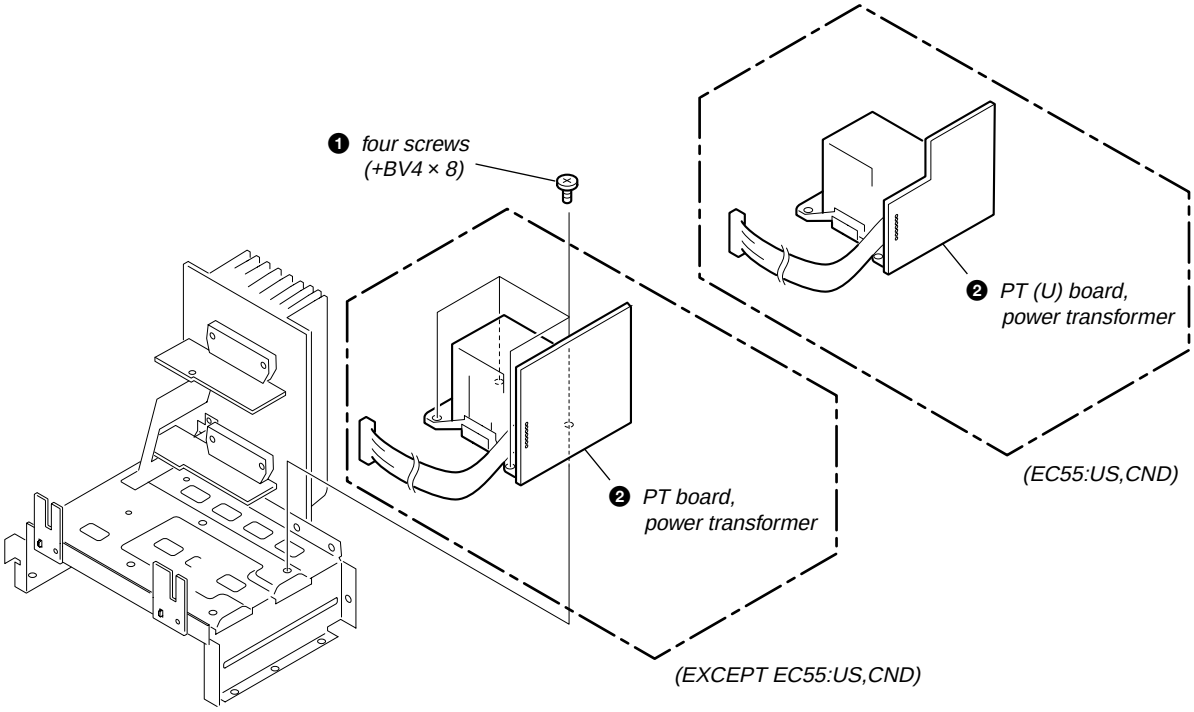

3-17. LOW-AMP BOARD, HI-AMP BOARD (EC77/GX99)

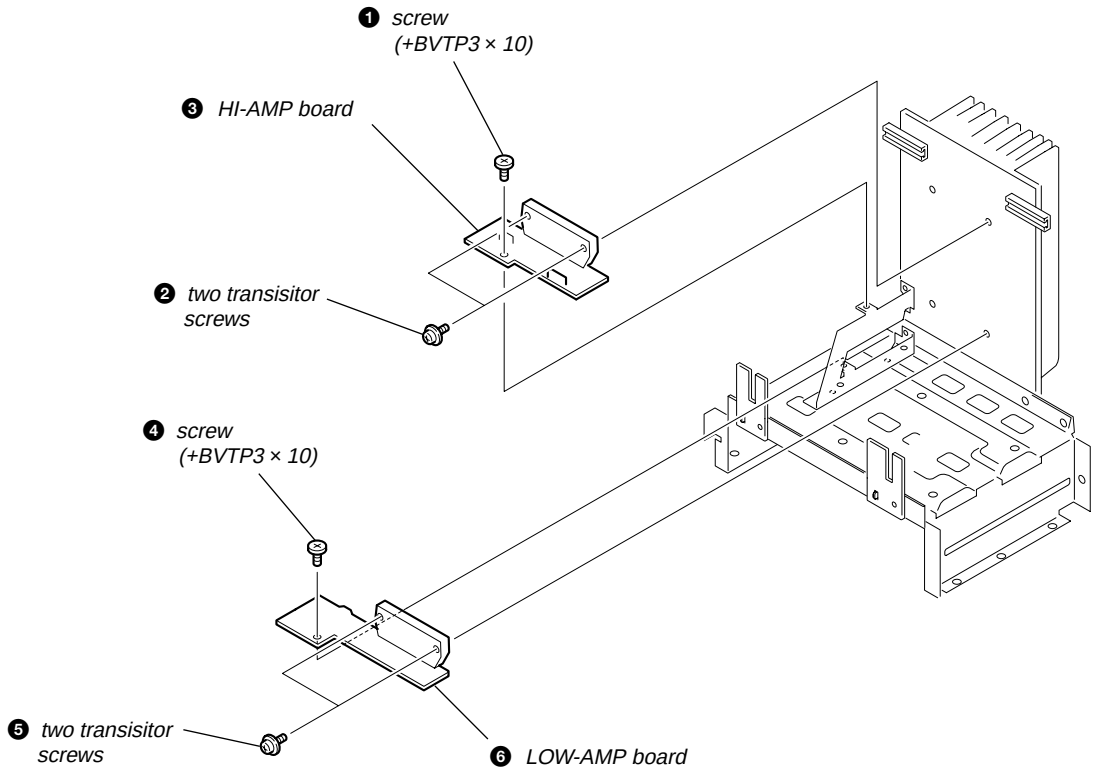

3-18. HI-AMP BOARD (EC55)

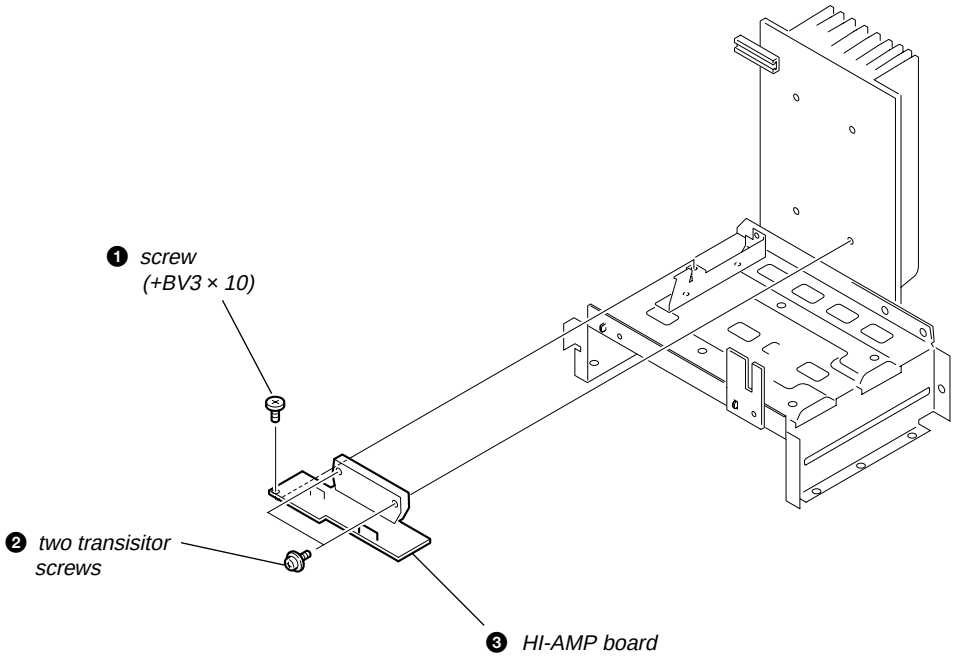

3-19. DC FAN

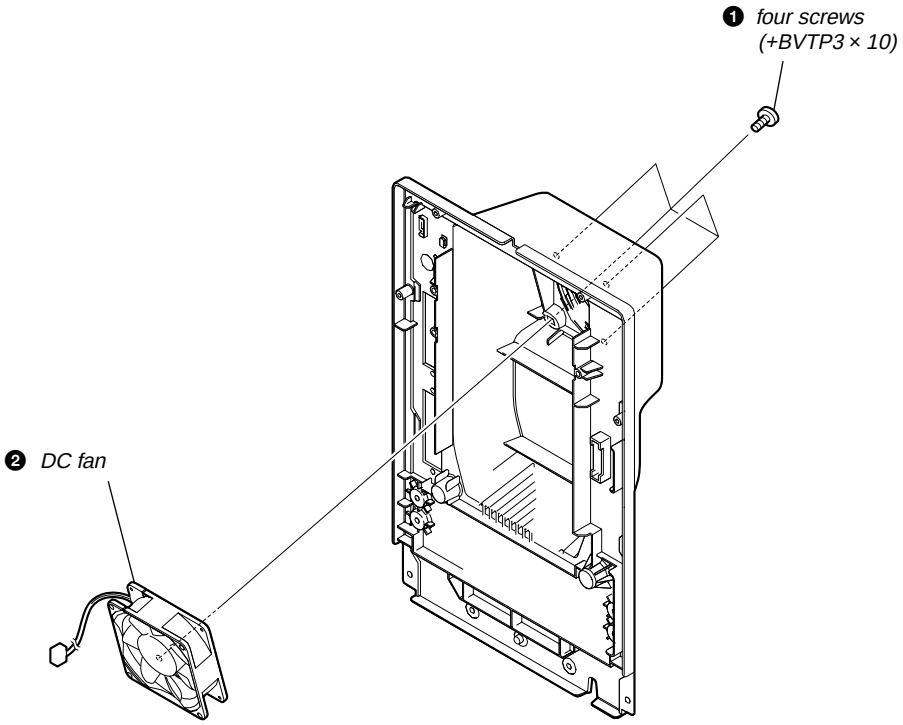

SECTION 4
TEST MODE

[MC COLD RESET]

The cold reset clears all data including preset data stored in the memory to initial conditions. Execute this mode when returning the set to the customer.

Procedure:

1. In the standby status, press the I/⏻ button to turn the power on.
2. Press three buttons of PLAY MODE/TUNING MODE, FUNCTION and at last I/⏻ simultaneously.
3. When "RESET" appears, the machine enters standby status.

[PANEL TEST MODE]

Enter The Panel Test Mode

Procedure:

1. In the standby status, press the I/⏻ button to turn the power on.
2. Press three buttons of DISPLAY, ■, and TUNER/BAND simultaneously.
3. When the panel test mode is activated, LEDs and segments of LCD are all turned on.

Version Check

Procedure:

1. In the panel test mode (all LEDs and segments of LCD are turned on), press the FUNCTION button.
2. On the LCD, date and version are displayed "xxxxxxxx". For example, "0904V014".
3. From this status, press the TUNER/BAND button, and the destination is displayed. For example, "ER NA" or "ER E2"
4. To release from this mode, press three buttons of DISPLAY, ■, and TUNER/BAND simultaneously.

[CD REPEAT 5 LIMIT CANCEL MODE]

Number of repeats for CD playback is 5 times when the repeat mode is "REPEAT". This mode enables CD to repeat playback for limitless times.

Procedure:

1. Press the I/⏻ button to turn the power on.
2. Press the FUNCTION button to select CD function.
3. Press three buttons of CD ▶II, DSGX, and DISPLAY simultaneously.
4. It enters the CD repeat 5 limit cancel mode and displays "NO LIMIT"
5. To release this mode, press the I/⏻ button to turn the power off.

[CD SHIP MODE]

This mode can run the CD sled motor optionally. Use this mode, for instance, when cleaning the optical pick-up.

Procedure:

1. Press the I/⏻ button to turn the power on.
2. Press the FUNCTION button to select CD function.
3. Press two buttons of CD ▶II and I/⏻ simultaneously.
4. Set to the CD ship mode. (chucking on)
5. After blink "STANDBY", "LOCK" is displayed, disconnect the AC plug.

[CD SLOT LOCK]

This mode is for the antitheft of CD disc in shop. (not for transport)

Procedure:

1. Press the I/⏻ button to turn the power on.
2. Press the FUNCTION button to select CD function.
3. Insert a disc.
4. While pressing the ■ button, press the ⏏ button for more 5 seconds.
5. The message "LOCKED" is displayed and the disc slot is locked. (Even if exiting from this mode, the disc slot is still locked)
6. If press the ⏏ button to eject the disc, the message "LOCKED" is displayed and can not eject the disc.
7. To release this lock, while pressing the ■ button, press the ⏏ button for 5 seconds again.
8. The message "UNLOCKED" is displayed and the disc slot is unlocked.

[CD POWER MANAGE]

This mode is for switch the CD power supply on/off. Even if this state pulls out AC plug, it is held.

Procedure:

1. Press the I/⏻ button to turn the power on.
2. Press the FUNCTION button to select CD function.
3. Press the I/⏻ button again to turn the power off (standby).
4. After pressing the DISPLAY button, while pressing the ■ button, press the I/⏻ button.
5. It turns power on and display "CD POWER", then display "ON" or "OFF".

[CHANGE-OVER THE AM TUNING INTERVAL] (Except European and Russian models)

The AM tuning interval can be changed over 9 kHz or 10 kHz.

Procedure:

1. Press the I/⏻ button to turn the power on.
2. Press the TUNER/BAND button to select TUNER (AM) function.
3. Press the I/⏻ button again to turn the power off (standby).
4. After pressing the DISPLAY button, while pressing the TUNING+▶▶▷▷I button, press the I/⏻ button.
5. It turns power on and display "9k STEP" or "10k STEP", and thus the tuning interval is changed over.

[CD SHIP AND COLD RESET]

Procedure:

1. Press the I/⏻ button to turn the power on.
2. Press the FUNCTION button to select CD function.
3. Press three buttons of PLAY MODE/TUNING MODE, CD ▶II and I/⏻ simultaneously.
4. After blink "STANDBY", "RESET" is displayed, disconnect the AC plug.

[CD SERVO TEST MODE]

This mode can check the servo system operations of the optical pick-up system (= optical unit + BD board).

Note1: Do not enter the [CD SERVO TEST MODE] while any other test mode is in progress.

Note2: Do not enter any other test mode while the [CD SERVO TEST MODE] is in progress.

How to Enter the CD Servo Test Mode

Procedure:

1. Press the [I/⏻] button to turn the power on.
2. Press the [FUNCTION] button to select CD function.
3. Press three buttons of [CD ▶II], [PLAY MODE/TUNING MODE] and [DISPLAY] simultaneously.
4. It enters the CD servo test mode and displays “BDT S CU”.

How to Exit from the CD Servo Test Mode

Procedure:

1. Press three buttons of [CD ▶II], [PLAY MODE/TUNING MODE] and [DISPLAY] simultaneously.
2. It exits from the CD Servo Test Mode and returns to the ordinary CD function.

Key Operation:

[🗀+], [🗀–]: Use these keys to move between the five modes contained in the CD Servo Test Mode, that are the S-Curve Mode, the RAM Read Mode, the RAM Write Mode, the Command Out Mode and the Error Rate Mode as described below. Also, use these keys to move between the menus within the respective five modes. When [🗀+] is pressed, the screen advances to the next menu or to the next mode. When [🗀–] is pressed, the screen returns back to the previous menu or to the previous mode. Use these keys also to increase or decrease the numeric value when changing the numeric value. Pressing [🗀+] increases the value and pressing [🗀–] decreases the value.

[DSGX], [EQ]: Use these keys to move between the different layers of the hierarchy of the CD Servo Test Mode shown below. Press [DSGX] to move down to the lower layer, and press [EQ] to move up to the higher layer.

[TUNING+▶▶▷▷I], [I◁◁◀◀ –TUNING]:
Use these keys to move the cursor to the right digit or to the left digit in the six-digit number, when changing the numeric value.
Press [TUNING+▶▶▷▷I] to move the cursor to the right, and press [I◁◁◀◀ –TUNING] to return the cursor to the left.

[FUNCTION]: Use this key to execute Command Out in the Command Out Mode.

CD Servo Test Mode Tree:

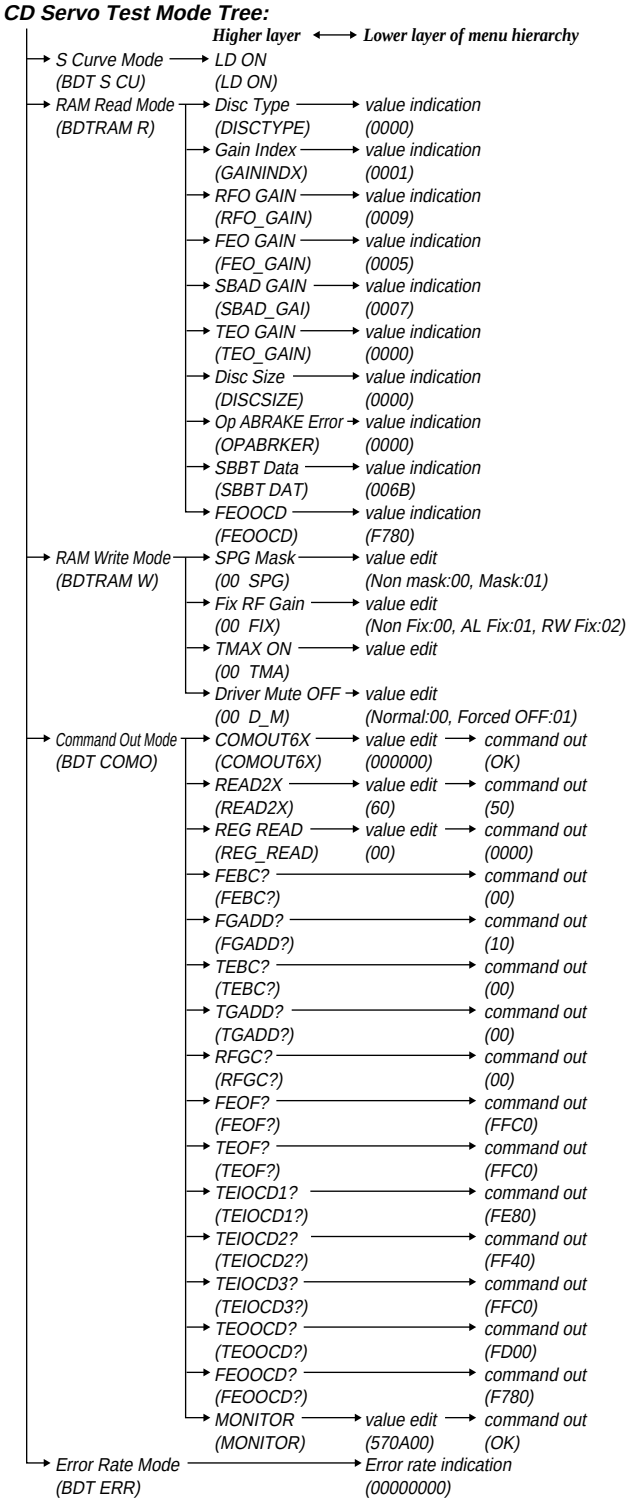

[CD SERVICE MODE]

This mode can move the SLED of the optical pick-up, and also can turn the optical pick-up laser power on and off.

Procedure:

1. Press the I/⏻ button to turn the power on.
2. Press three buttons of CD ▶II, 🗀+, and DISPLAY simultaneously.
4. It enters the CD service mode and displays "SERVICE".
5. To exit from this mode, press three buttons of CD ▶II, 🗀+ and DISPLAY simultaneously.

Key Operation:

TUNING+▶▶▷▷I, I◁◁◀◀ –TUNING:

Use these keys to move the SLED. When TUNING+▶▶▷▷I is pressed in this mode, the SLED moves to outer circumference and the message "SLED OUT" is displayed.
When I◁◁◀◀ –TUNING is pressed in this mode, the SLED moves to inner circumference and the message "SLED IN" is displayed.

PLAY MODE/TUNING MODE:

Use this key to turn the optical pick-up laser power on and off. When the laser power is turned on, the message "LD ON" is displayed. When the laser power is turned off, the message "LD OFF" is displayed.

[CD ERROR CODE]

The past errors of the CD mechanism (CDM) are displayed as the CDM Errors, and those of the optical pick-up system (= optical unit + BD board) are displayed as the BD Errors as shown below.

Procedure:

1. Press the I/⏻ button to turn the power on.
2. Press the FUNCTION button to select CD function.
3. Press three buttons of CD ▶II , ■ and DISPLAY simultaneously.
4. Then, the CDM error code is displayed as "M0xxxxxx" (x means hexadecimal number) on the LCD screen as shown below.
5. Every pressing of the TUNING+▶▶▷▷I button in this mode increments the number after "M" starting from "M0" up to "M9", and then returns to "M0". Every pressing of the I◁◁◀◀–TUNING button in this mode decrements the number after "M". The smaller the error code number is, the newer the error content is.
6. When the PLAY MODE/TUNING MODE button is pressed then, the BD error code is displayed as "D0xxxxxx" (x means hexadecimal number) on the LCD screen as shown below. In the same way as the CDM error code, use of the TUNING+▶▶▷▷I and the I◁◁◀◀ –TUNING buttons in this mode enables tracing of the error history.
7. To exit from this mode, press the I/⏻ button to turn the power off.

Contents of "CDM Errors"

Error display example

M 0 FF 11 42
① ② ③ ④

① It indicates the error history number
0 to 9: The error code number 0 indicates the newest error.

② It indicates whether the CDM error occurs in the normal operations or during the initialization operation.
FF : The error has occurred in the normal operations.
Other than FF : The error has occurred during the initialization operation.

③ It indicates the processing during which the trouble has occurred.
01: The disc EJECT processing is in progress.
02: The disc INSERTION-WAITING processing is in progress.
03: Processing of the disc INSERTION-REQUEST for the upper CD tray is in progress.
04: Processing of the disc EJECTION-REQUEST for the upper CD tray is in progress.
05: The disc pulling-in operation is in progress.
06: The disc chucking processing is in progress.
07: The disc re-chucking processing is in progress.
08: The disc chucking-release completion operation is in progress.

④ It indicates the operation during which the trouble has occurred.
00 : Waiting for the operation.
10 to 13 : The disc EJECT operation is in progress.
20 : The disc pulling-in operation is in progress.
30 : The disc chucking-release operation is in progress.
40 to 43 : The disc EJECT operation due to error is in progress.

Contents of "BD Errors"

Error display example

D 0 02 09 01
① ② ③ ④

① It indicates the error history number
0 to 9: The error code number 0 indicates the newest error.

② It indicates the error content
01: The focus servo cannot lock-in.
02: GFS is no good (NG).
03: The startup time exceeds the specified period of time (time over)
04: The focus servo is unlocked continuously.
05: Q code cannot be obtained within the specified period of time.
06: The tracking servo cannot lock-in.
07: Blank disc

③ It indicates the on-going processing of optical pick-up system (= optical unit + BD board) when the trouble has occurred.
01: The CD SHIP mode processing is in progress.
02: The POWER OFF processing is in progress.
03: The INITIALIZE processing is in progress.
04: The optical pick-up system (= optical unit + BD board) is in the stop state.
05: The STOP operation is in progress.
06: The startup processing is in progress.
07: The TOC read-in processing is in progress.
08: The SEARCH operation is in progress.
09: The PLAY operation is in progress.
0A: The PAUSE operation is in progress.
0B: The PLAY – MANUAL SEARCH operation is in progress.
0C: The PAUSE – MANUAL SEARCH operation is in progress.

④ It indicates the operation that is being processed when the trouble has occurred.
It indicates the step number of each processing specified by ③. Because the numbers of steps are different in each processing, this number is different in each processing.

SECTION 5
MECHANICAL ADJUSTMENTS

- **Precaution**

1. Clean the following parts with a denatured-alcohol-moistened swab :

record/playback head	pinch roller
erase head	rubber belts
capstan	idlers

2. Demagnetize the record/playback head with a head demagnetizer. (Do not bring the head magnetizer close to the erase head.)
3. Do not use a magnetized screwdriver for the adjustments.
4. After the adjustments, appiy suitable locking compound to the parts adjusted.
5. The adjustments should be performed with the rated power supply voltage unless otherwise noted.

- **Torque Measurement**

Mode	Torque meter	Meter reading
FWD	CQ-102AS	2.0 – 8.0 mN • m (20 to 80 g • cm) (0.28 – 1.12 oz • inch)
FWD back tension	CQ-102C	0.15 – 0.6 mN • m (1.5 to 6 g • cm) (0.021 – 0.083 oz • inch)
FF	CQ-201AS	5 – 17.7 mN • m (50 to 177 g • cm) (0.7 – 2.48 oz • inch)
REW	CQ-201B	5 – 17.7 mN • m (50 to 177 g • cm) (0.7 – 2.48 oz • inch)

- **Tape Tension Measurement**

Mode	Tension Meter	Meter Reading
FWD	CQ-403A	more than 80 g (more than 2.82 oz)

SECTION 6
ELECTRICAL ADJUSTMENTS

DECK SECTION (EXCEPT US, CND) | 0 dB=0.775 V

1. Demagnetize the record/playback head with a head demagnetizer.
2. Do not use a magnetized screwdriver for the adjustments.

- **Test Tape**

Tape	Signal	Used for
P-4-A063	6.3 kHz, -10 dB	Azimuth Adjustment

RECORD/PLAYBACK HEAD AZIMUTH ADJUSTMENT

Procedure:

1. Mode: Playback

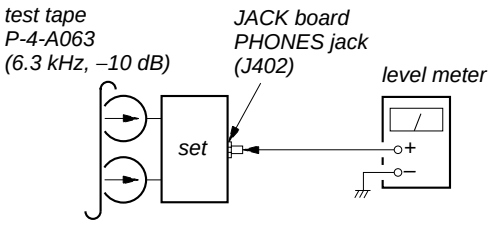

2. Turn the adjustment screw and check output peaks. If the peaks do not match for L-CH and R-CH, turn the adjustment screw so that outputs match within 1dB of peak.

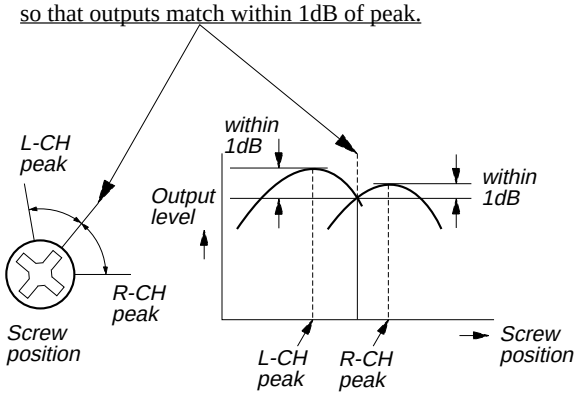

3. Mode: Playback

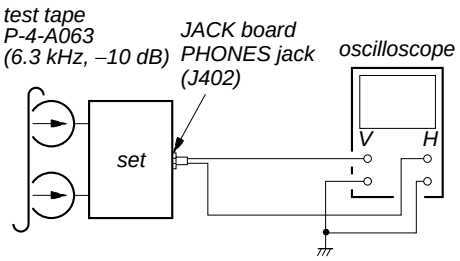

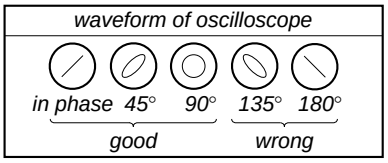

4. After the adjustments, apply suitable locking compound to the pats adjusted.

Adjustment Location: Record/Playback/Erase Head

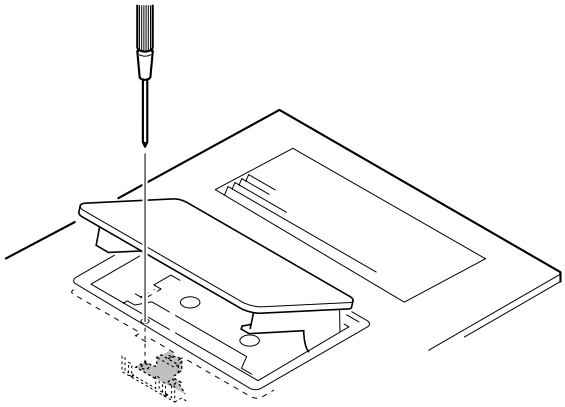

CD SECTION

Note:

1. CD Block is basically constructed to operate without adjustment.
2. Use YEDS-18 disc (3-702-101-01) unless otherwise indicated.
3. Use an oscilloscope with more than 10 MΩ impedance.
4. Clean the object lens by an applicator with neutral detergent when the signal level is low than specified value with the following checks.
5. Check the focus bias check when optical pick-up block is replaced.

FOCUS BIAS CHECK

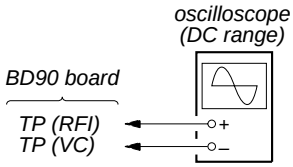

Procedure :

1. Connect oscilloscope to TP (RFI) and TP (VC) on the BD90 board.
2. Press the I/⏻ button to turn the power ON, and press the ⏏ (CD) button to open the CD disc tray.
3. Set disc (YEDS-18) on the tray and press the CD ▶II button to playback.
4. Confirm that oscilloscope waveform is as shown in the figure below. (eye pattern)
   A good eye pattern means that the diamond shape (◊) in the center of the waveform can be clearly distinguished.

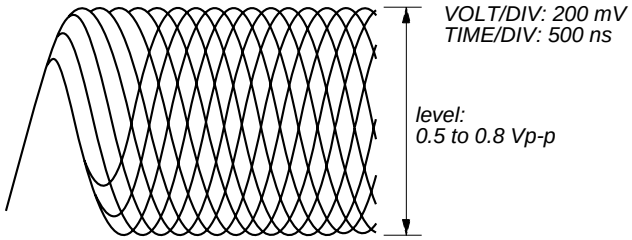

Checking Location:

– BD90 Board (Side B) –

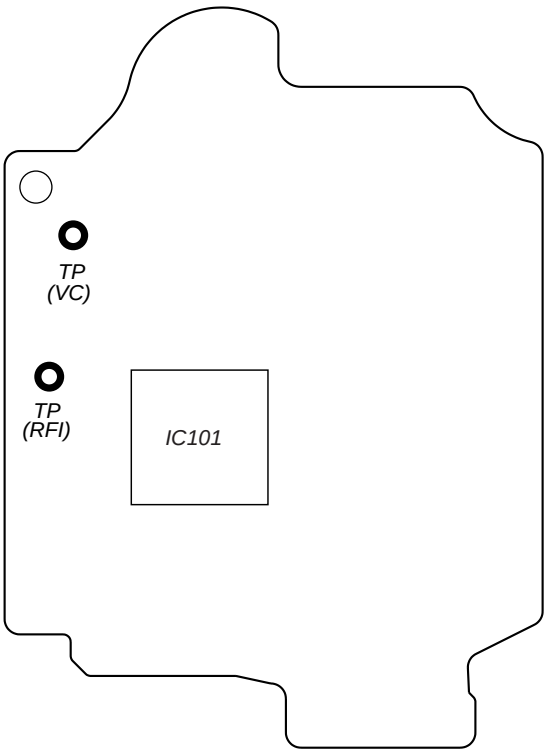

TUNER SECTION

0 dB=1 µV

[AM]

Setting:

FUNCTION: TUNER

TUNER/BAND button: AM

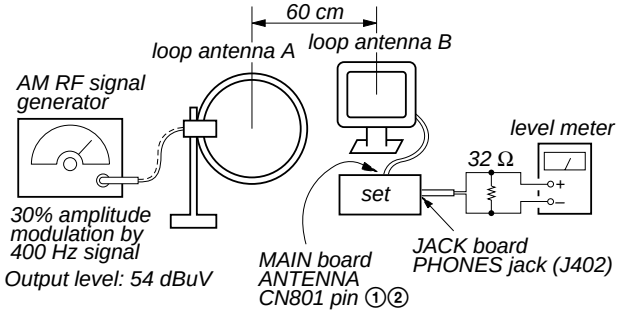

[FM]

Setting:

FUNCTION: TUNER

TUNER/BAND button: FM

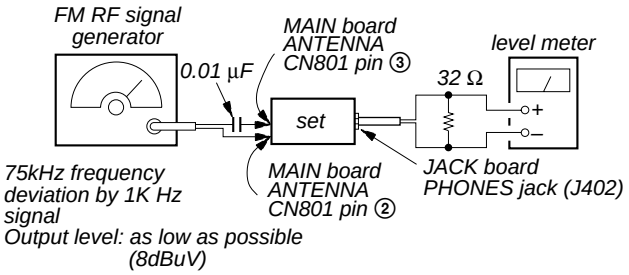

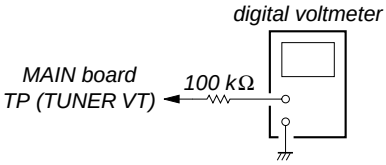

- Repeat the procedures in each adjustment several times.

AM FREQUENCY COVERAGE ADJUSTMENT (US, Canadian, Australian models)		
Adjustment Part	Frequency Display	Reading on Digital Voltmeter
L801	530 kHz	1.5 ± 0.1 V
Confirmation	1,710 kHz	8 ± 0.5 V

AM FREQUENCY COVERAGE ADJUSTMENT (Other models)		
Adjustment Part	Frequency Display	Reading on Digital Voltmeter
L801	531 kHz	1.5 ± 0.1 V
Confirmation	1,602 kHz	7.2 ± 0.5 V

AM TRACKING ADJUSTMENT (US, Canadian, Australian models)	
Adjust for a maximum reading on level meter	
L805	530 kHz

AM TRACKING ADJUSTMENT (Other models)	
Adjust for a maximum reading on level meter	
L805	531 kHz

FM FREQUENCY COVERAGE ADJUSTMENT		
Adjustment Part	Frequency Display	Reading on Digital Voltmeter
L803	87.5 kHz	1.75 ± 0.1 V
Confirmation	108 kHz	6.2 ± 0.5 V

FM TRACKING ADJUSTMENT	
Adjust for a maximum reading on level meter	
L804	98 MHz

Adjustment Location: MAIN board (See page 28).

[FM DETECTOR ADJUSTMENT]

Setting:

FUNCTION: TUNER

TUNER/BAND button: FM

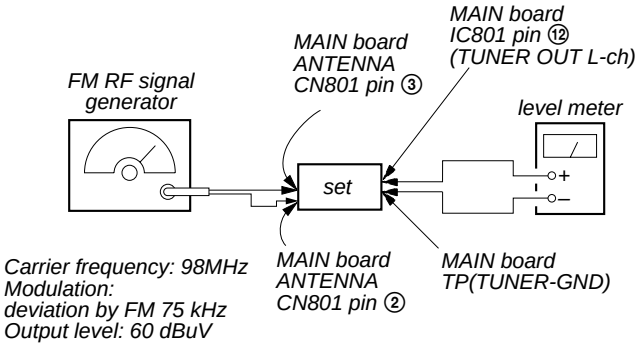

1. Tune the set to 98 MHz.
2. Adjust L802 so that modulation distortion may become the best in the vicinity of the maximum value where the tuner out level becomes –15dBuV or more.

[FM Auto Stop Check]

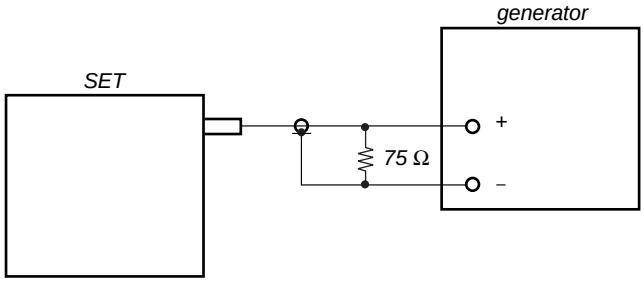

Procedure:

1. Turn the power on.
2. Input the following signal from Signal Generator to FM antenna input directly.

* Carrier Freq : A = 87.5 MHz, B = 98 MHz, C = 108 MHz
Deviation : 75 kHz
Modulation : 1 kHz
ANT input : 35 dBu (EMF)

Note: Please use 75 ohm "coaxial cable" to connect SG and the set. You cannot use video cable for checking.
Please use SG whose output impedance is 75 ohm.

3. Set to FM tuner function and scan the input FM signal with automatic scanning.
4. Confirm that input Frequency of A, B and C are detected and automatic scanning stops.

The stop of automatic scanning means "The station signal is received in good condition."

Adjustment Location and Connecting Points

– MAIN BOARD (Component Side) –

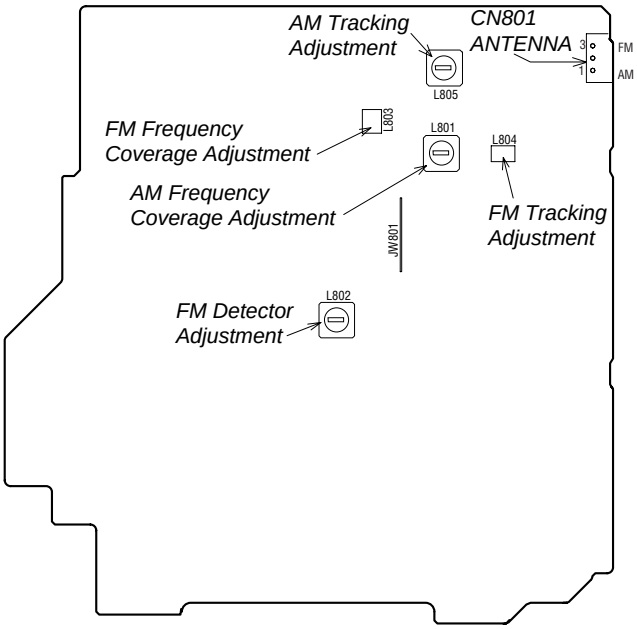

– MAIN BOARD (Conductor Side) –

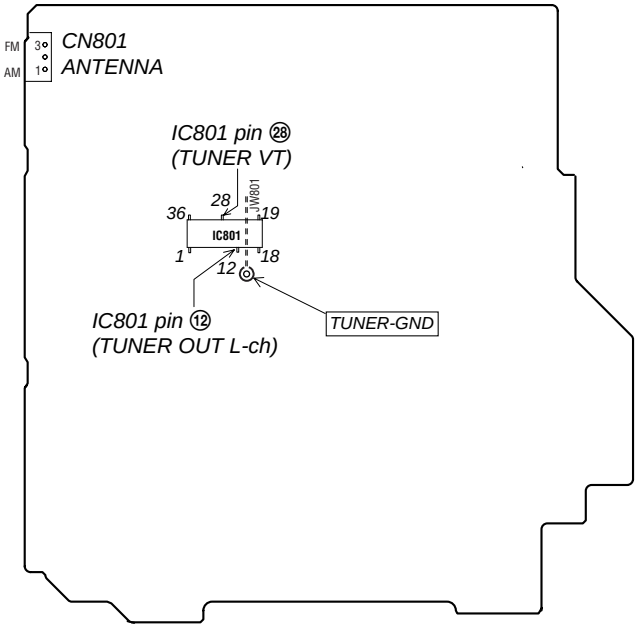

SECTION 7
DIAGRAMS

THIS NOTE IS COMMON FOR PRINTED WIRING BOARDS AND SCHEMATIC DIAGRAMS.
(In addition to this, the necessary note is printed in each block.)

Note on Schematic Diagram:
- All capacitors are in µF unless otherwise noted. (p: pF) 50 WV or less are not indicated except for electrolytics and tantalums.
- All resistors are in Ω and ¼ W or less unless otherwise specified.
- △ : internal component.
- : nonflammable resistor.
- : fusible resistor.
- : panel designation.

Note:	Note:
The components identified by mark ⚠ or dotted line with mark ⚠ are critical for safety. Replace only with part number specified.	Les composants identifiés par une marque ⚠ sont critiques pour la sécurité. Ne les remplacer que par une piéce portant le numéro spécifié.

- : adjustment for repair.
- : B+ Line.
- : B– Line.
- Voltages are taken with a VOM (Input impedance 10 MΩ). Voltage variations may be noted due to normal production tolerances.
- Waveforms are taken with a oscilloscope. Voltage variations may be noted due to normal production tolerances.
  – HI-AMP/LOW-AMP Section –
  No mark: CD STOP
  – DECK Section –
  No mark: TAPE PLAY or TAPE REC
  – Other Section –
  No mark: CD PLAY
- Circled numbers refer to waveforms.
- Signal path.
  : TUNER (FM)
  : TUNER (AM)
  : CD
  : AUDIO
  : PB (TAPE)
  : REC (TAPE)
- Abbreviation

AR	: Argentine model
AUS	: Australian model
CND	: Canadian model
E2	: 120 V AC area in E model
E3	: 240 V AC area in E model
E51	: Chilean and Peruvian models
KR	: Korean model
MX	: Mexican model
RU	: Russian model
SP	: Singapore model

Note on Printed Wiring Boards:
- : parts extracted from the component side.
- : parts extracted from the conductor side.
- △ : internal component.
- : Pattern from the side which enables seeing.

Caution:	
Pattern face side: (Side B)	Parts on the pattern face side seen from the pattern face are indicated.
Parts face side: (Side A)	Parts on the parts face side seen from the parts face are indicated.

- Indication of transistor.

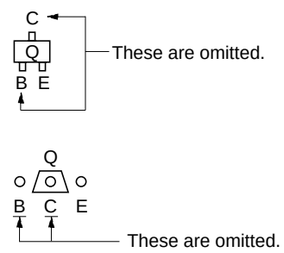

- **Circuit Boards Location**

EC77/GX99

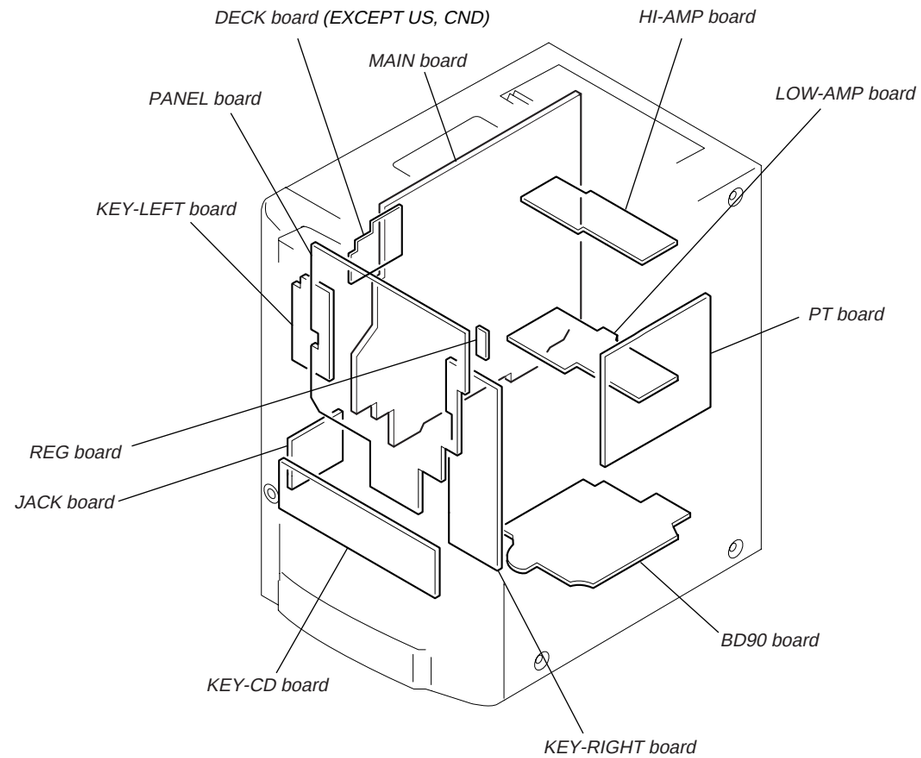

EC55

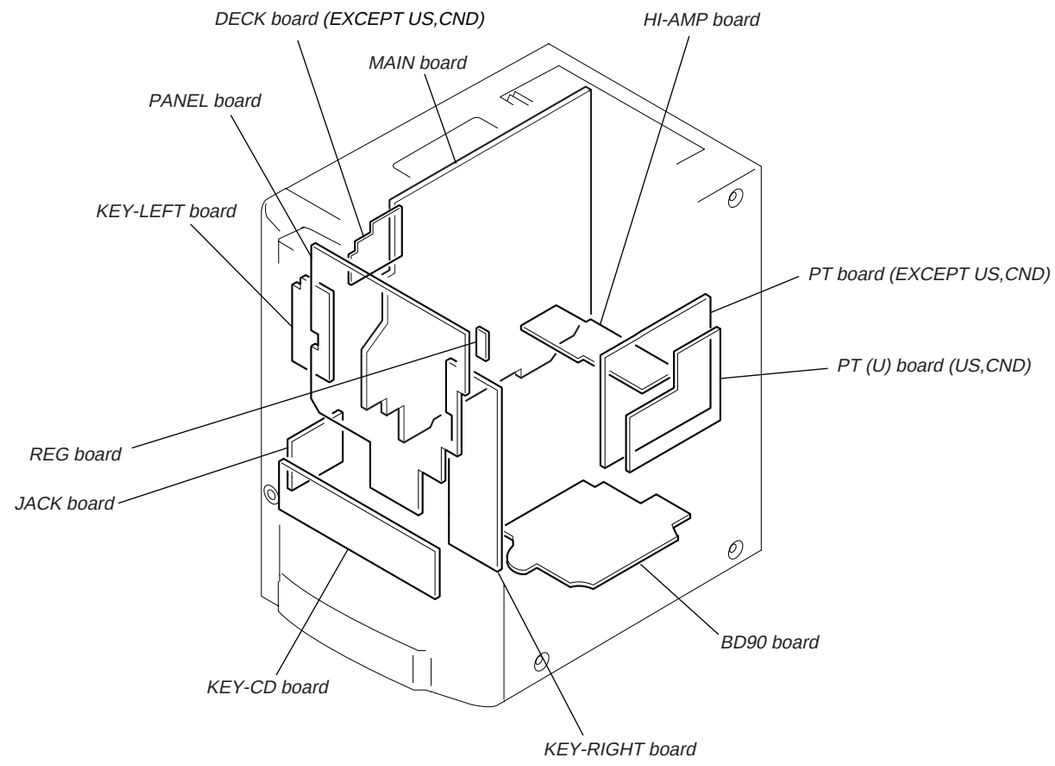

7-1. BLOCK DIAGRAM — BD/DRIVER SECTION —

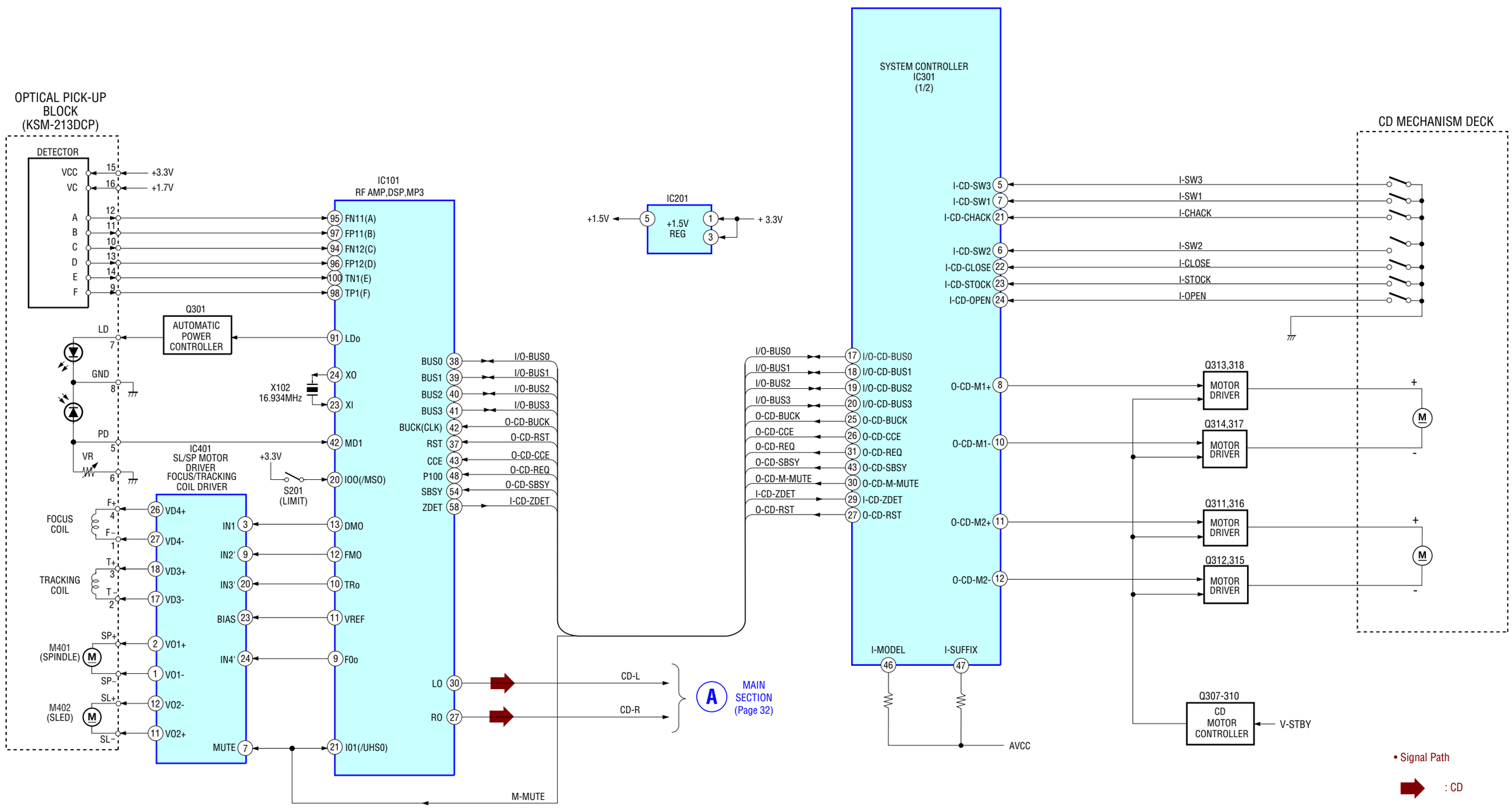

7-2. BLOCK DIAGRAM — TUNER SECTION —

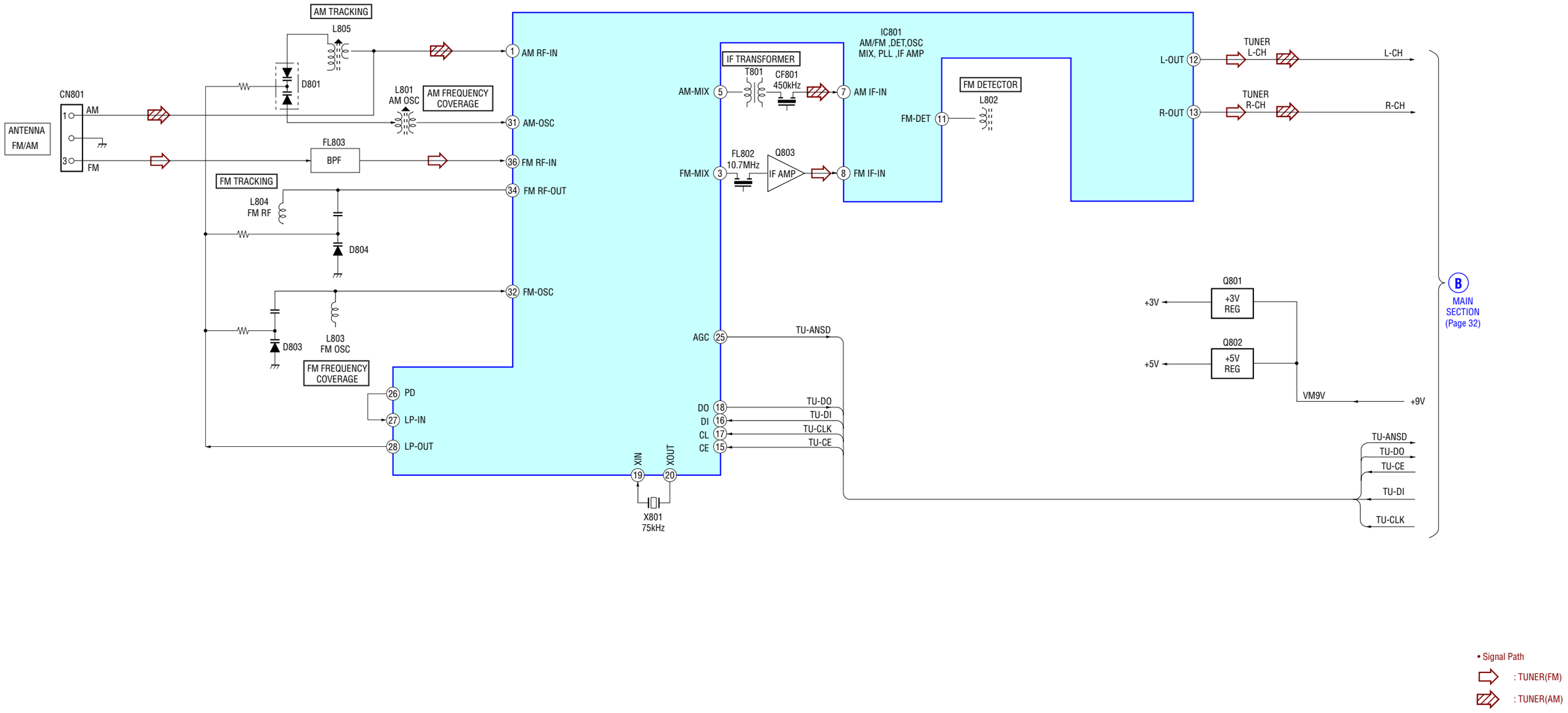

• Signal Path
: TUNER(FM)
: TUNER(AM)

7-3. BLOCK DIAGRAM — MAIN SECTION —

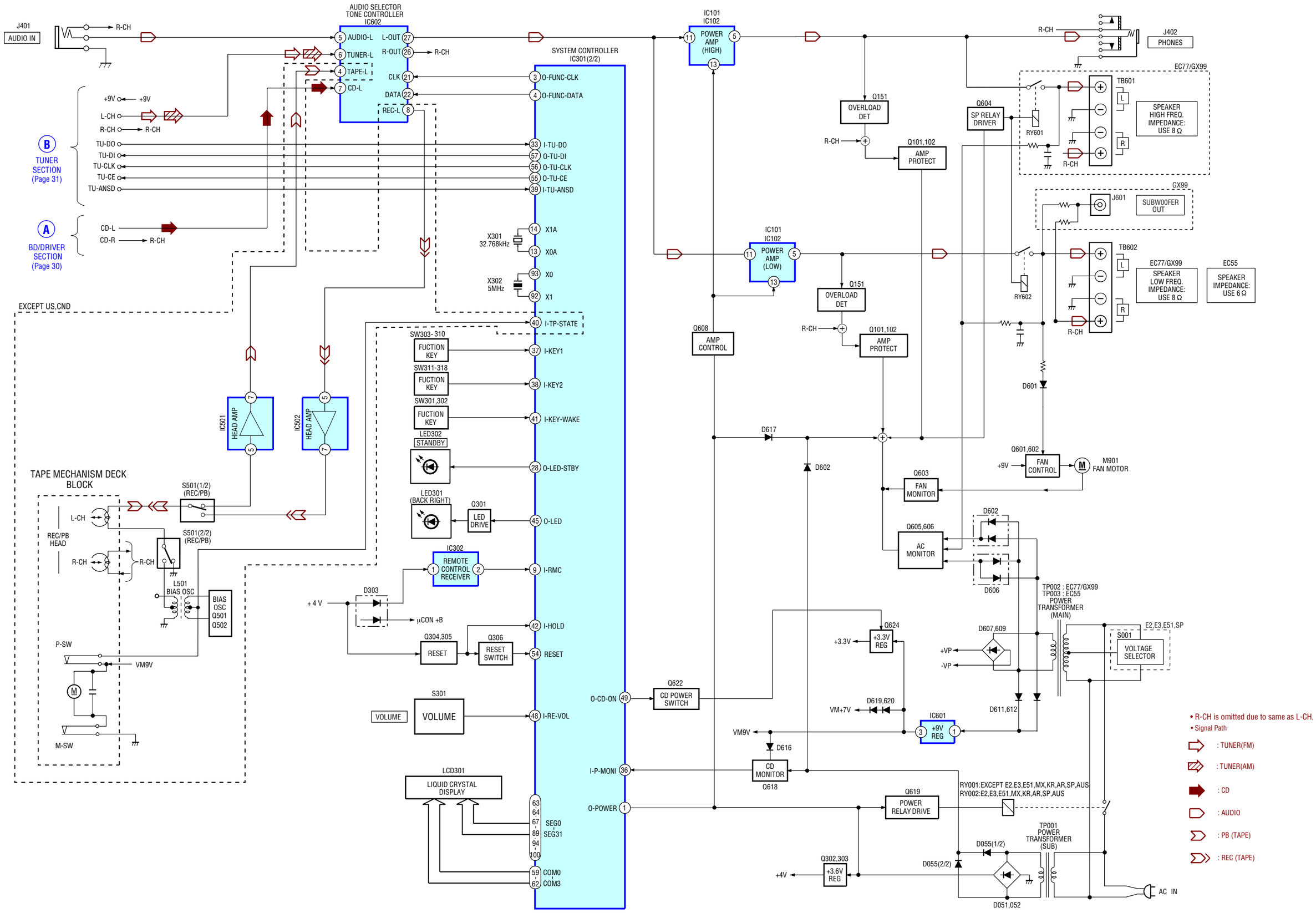

7-4. PRINTED WIRING BOARD — BD90 BOARD —

• See page 29 for Circuit Boards Location. :Uses unleaded solder.

【BD90 BOARD】(SIDE A)

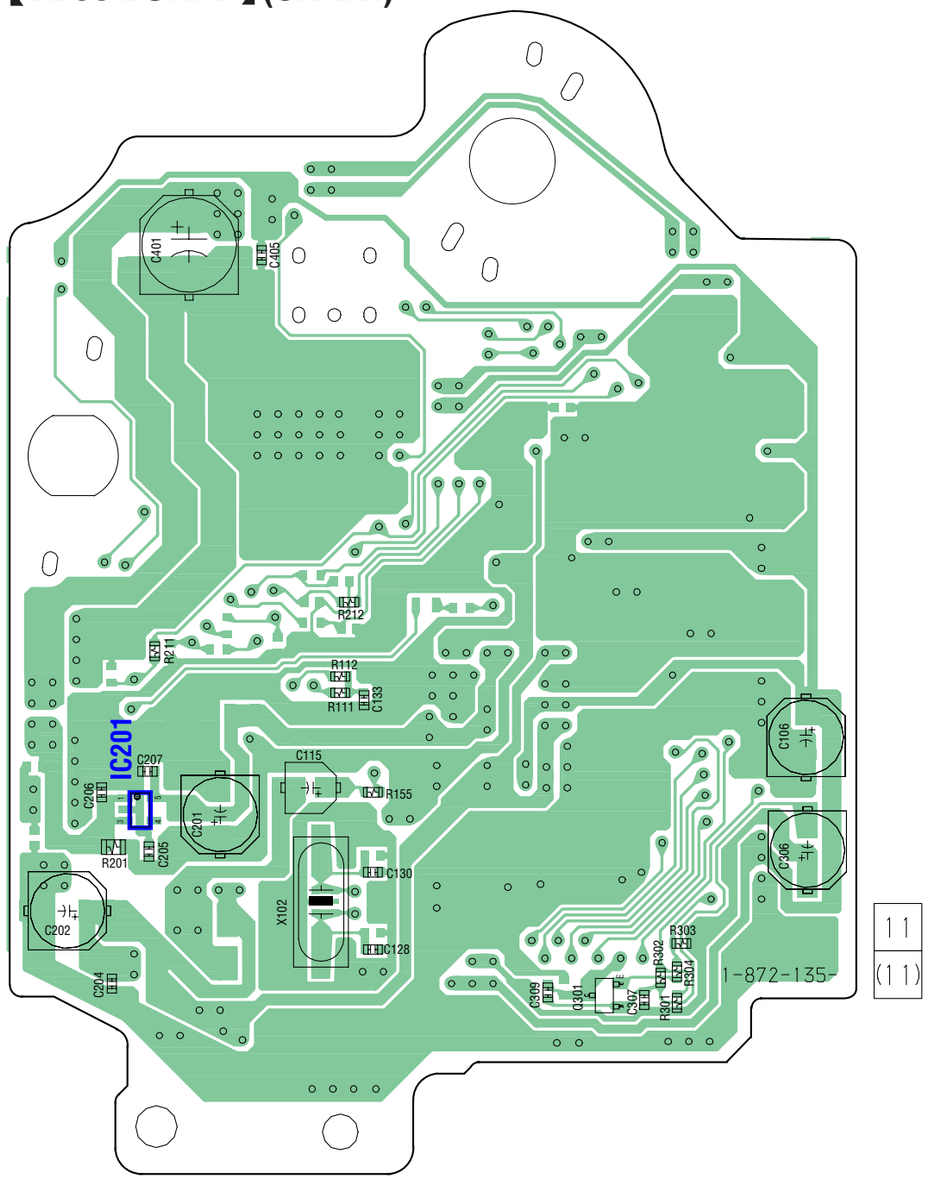

【BD90 BOARD】(SIDE B)

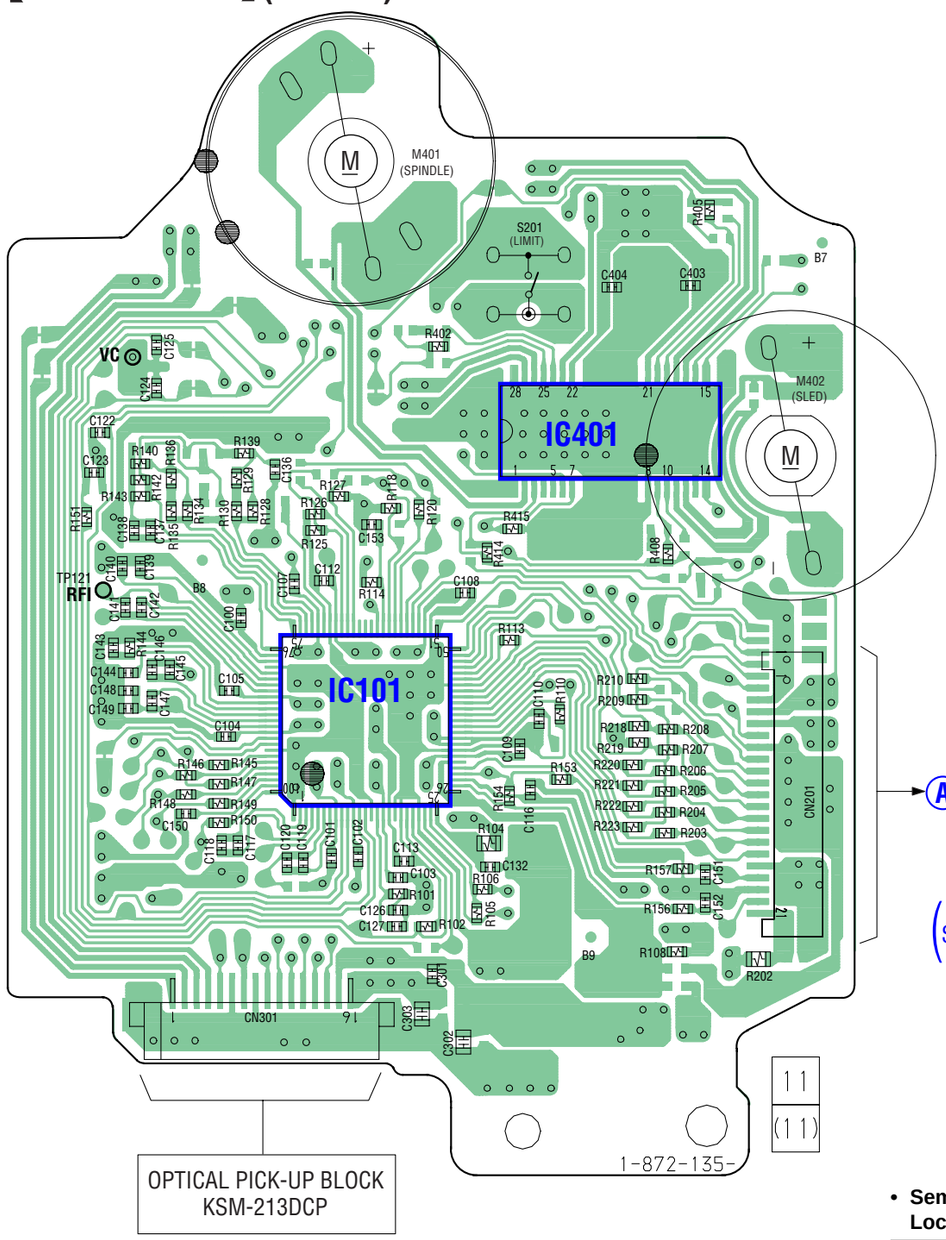

Ⓐ MAIN BOARD
CN608
(SUFFIX-12 Page 35)
(SUFFIX-13,-14 SUPPLEMENT-1 Page 3)

• **Semiconductor Location**

Ref. No.	Location
IC101	E-9
IC201	E-2
IC401	C-10
Q301	F-4

7-5. SCHEMATIC DIAGRAM — BD90 BOARD —

• See page 48 for Waveforms. • See page 48 for IC Block Diagram. • See page 51 for IC Pin Function Description.

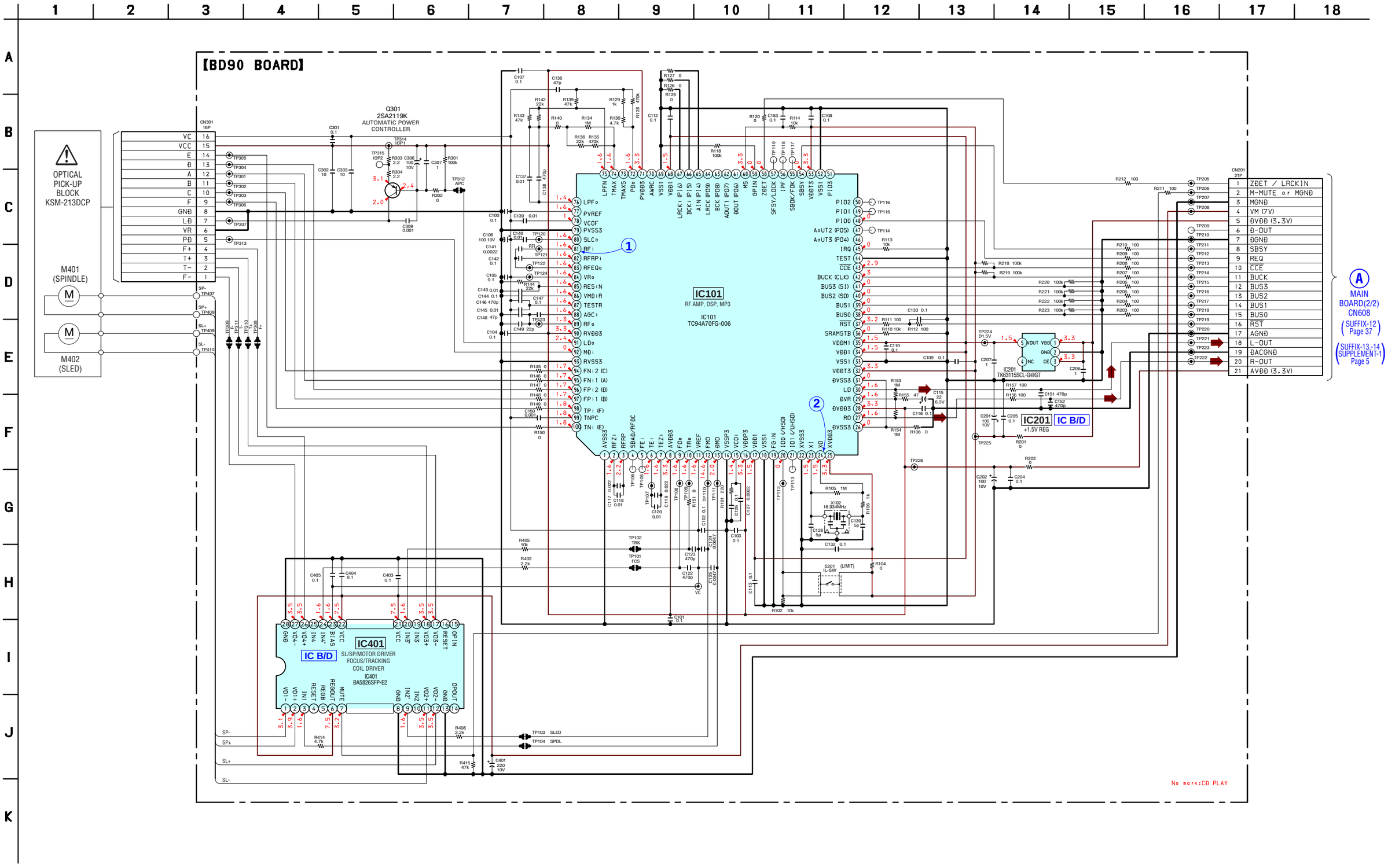

7-6. PRINTED WIRING BOARDS — MAIN SECTION —

• See page 29 for Circuit Boards Location. :Uses unleaded solder.

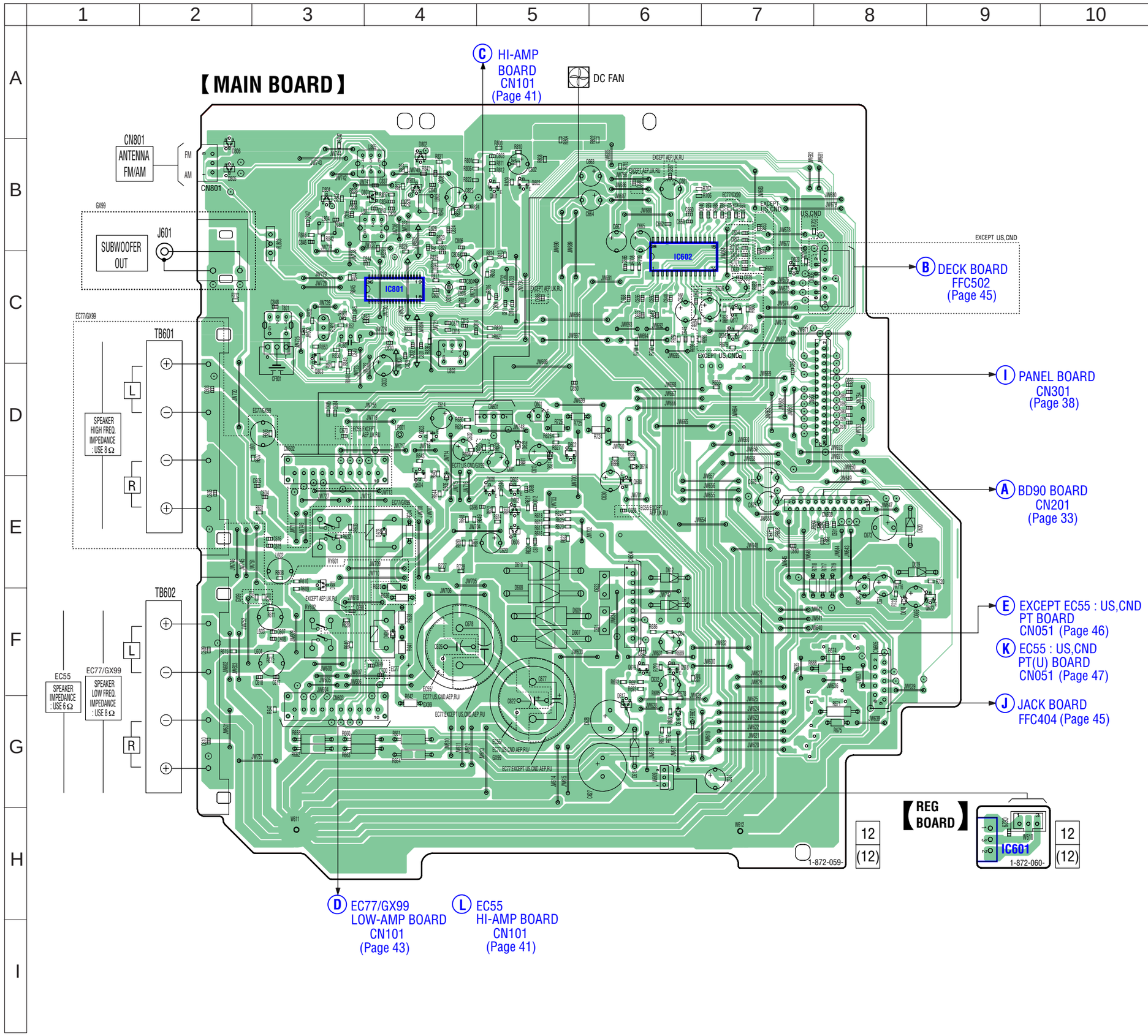

- **Semiconductor Location**

Ref. No.	Location
D601	E-3
D602	E-5
D603	E-3
D604	F-4
D605	E-4
D606	E-5
D607	F-5
D608	E-5
D609	F-5
D610	E-5
D611	F-6
D612	E-6
D614	D-6
D615	G-6
D616	C-7
D617	C-7
D618	E-8
D619	E-8
D620	E-8
D621	D-5
D622	D-5
D623	C-7
D801	B-3
D802	B-4
D803	B-4
D804	B-3
D805	B-2
D806	B-2
IC601	H-9
IC602	B-6
IC801	C-4
Q601	D-5
Q602	D-5
Q603	D-4
Q604	E-4
Q605	E-5
Q606	E-5
Q608	E-6
Q616	C-7
Q617	C-7
Q618	F-6
Q619	F-6
Q622	F-8
Q624	E-8
Q801	B-5
Q802	B-5
Q803	D-3

7-7. SCHEMATIC DIAGRAM — MAIN SECTION (1/2) —

• See page 48 for Waveform. • See page 49 for IC Block Diagram.

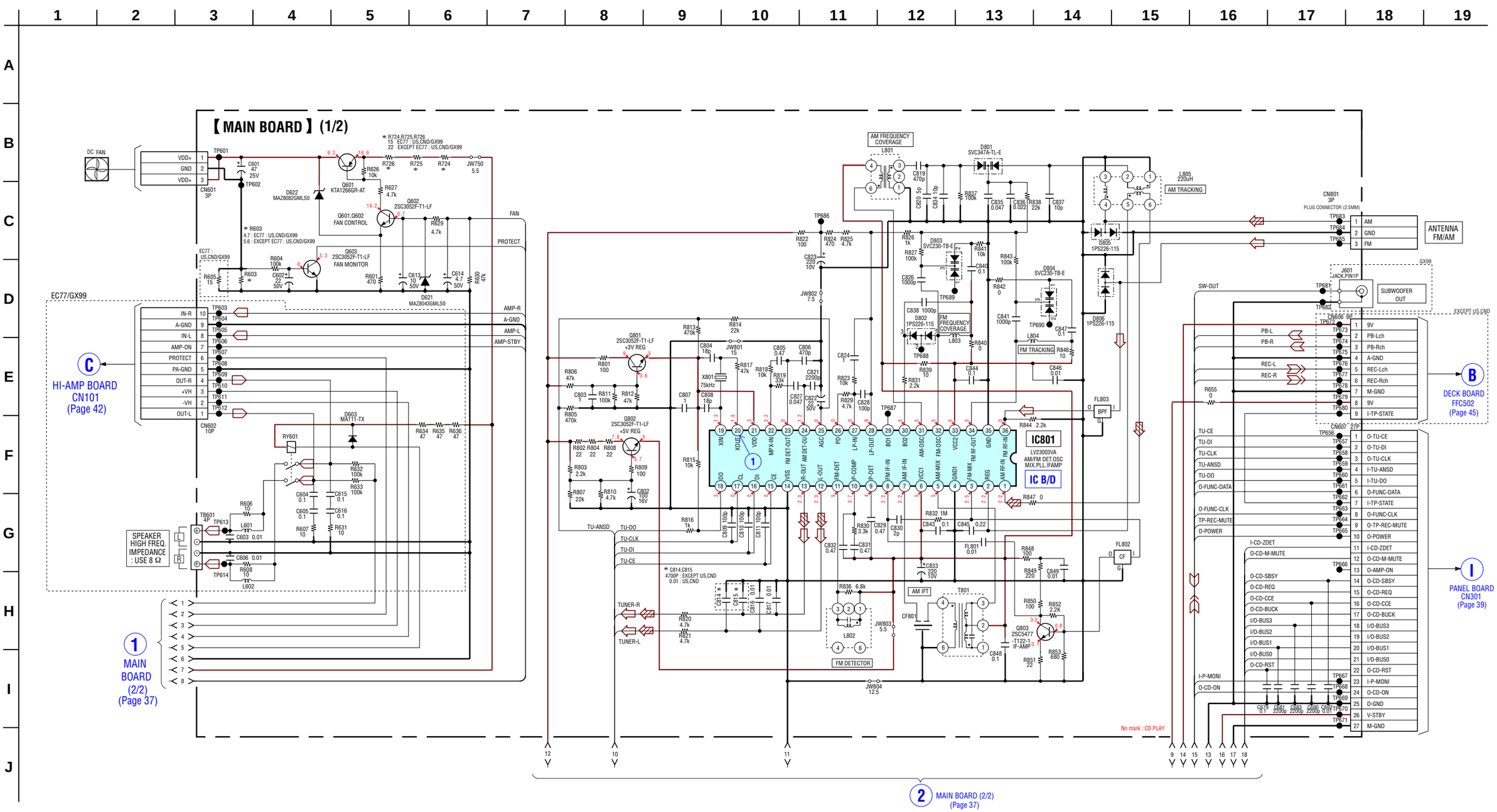

7-8. SCHEMATIC DIAGRAM — MAIN SECTION (2/2) —

• See page 48 for IC Block Diagram.

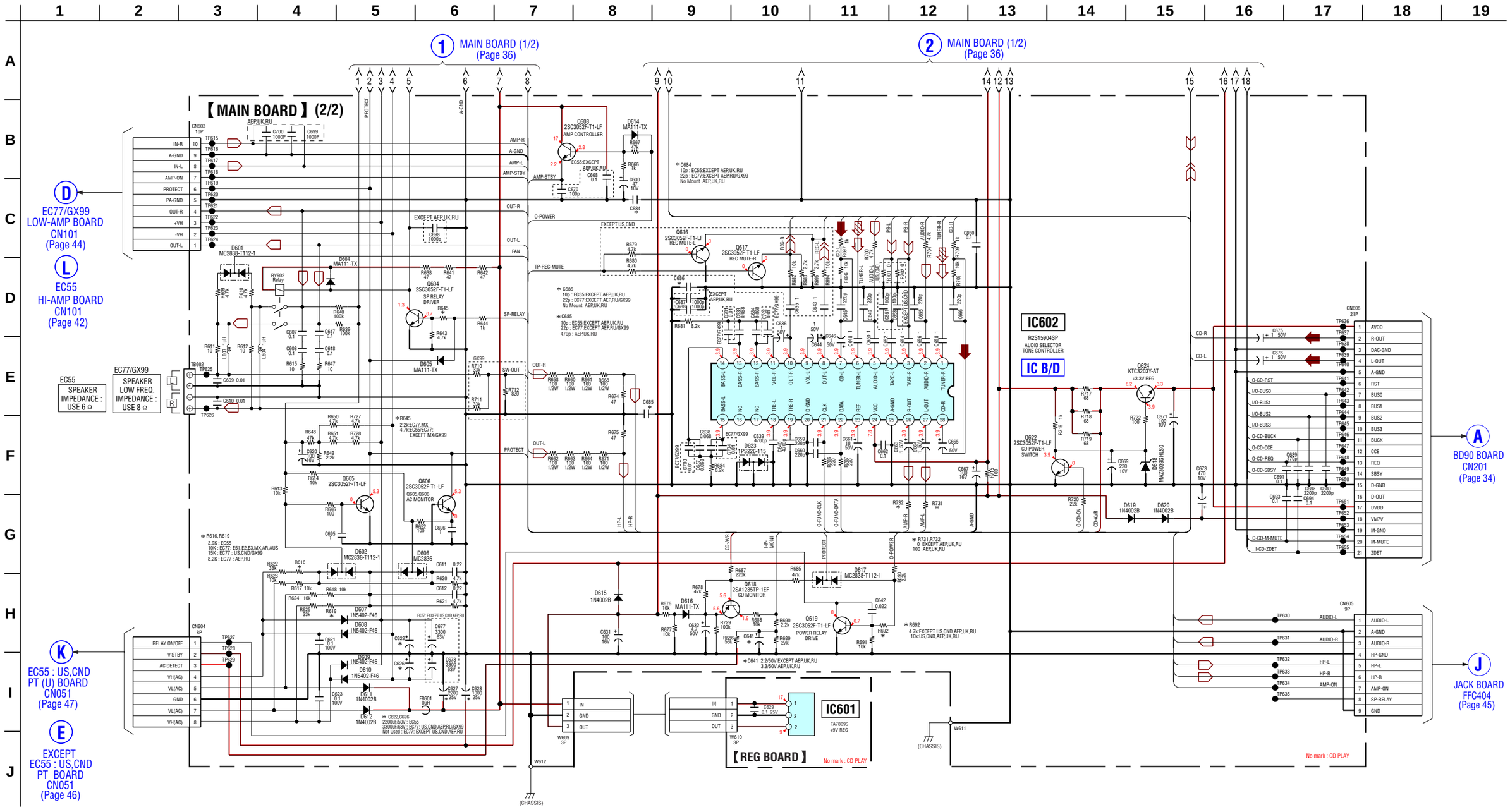

7-9. PRINTED WIRING BOARD — PANEL BOARD —

• See page 29 for Circuit Boards Location. :Uses unleaded solder.

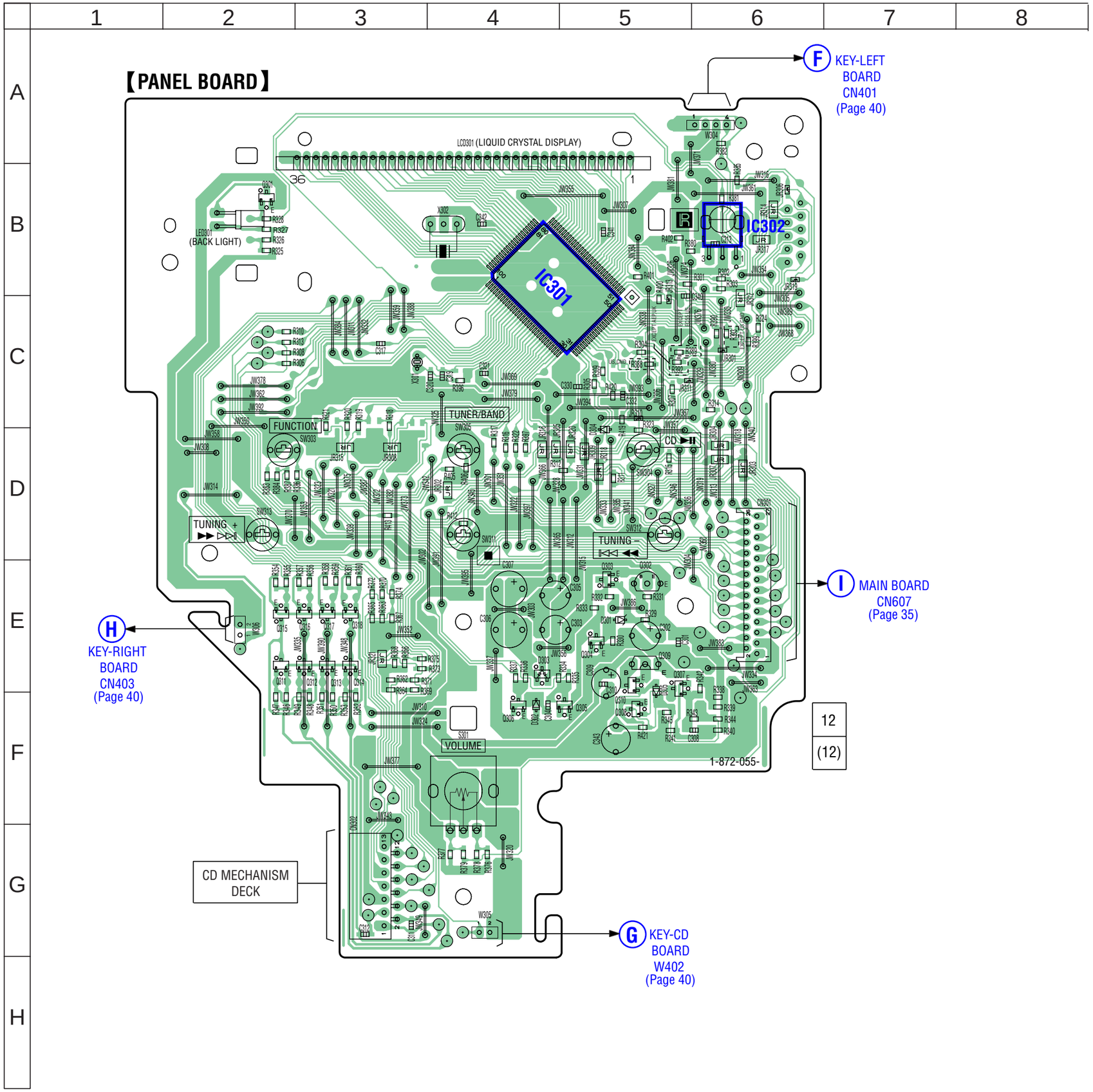

• **Semiconductor Location**

Ref. No.	Location
D301	E-5
D302	F-4
D303	E-4
D304	C-5
D305	E-5
LED301	B-2
IC301	B-4
IC302	B-6
Q301	B-2
Q302	D-5
Q303	D-5
Q304	E-5
Q305	E-5
Q306	F-4
Q307	E-5
Q308	F-5
Q309	E-5
Q310	E-5
Q311	E-2
Q312	E-3
Q313	E-3
Q314	E-3
Q315	E-2
Q316	E-3
Q317	E-3
Q318	E-3

7-10. SCHEMATIC DIAGRAM — PANEL BOARD —

• See page 48 for Waveforms. • See page 54 for IC Pin Function Description.

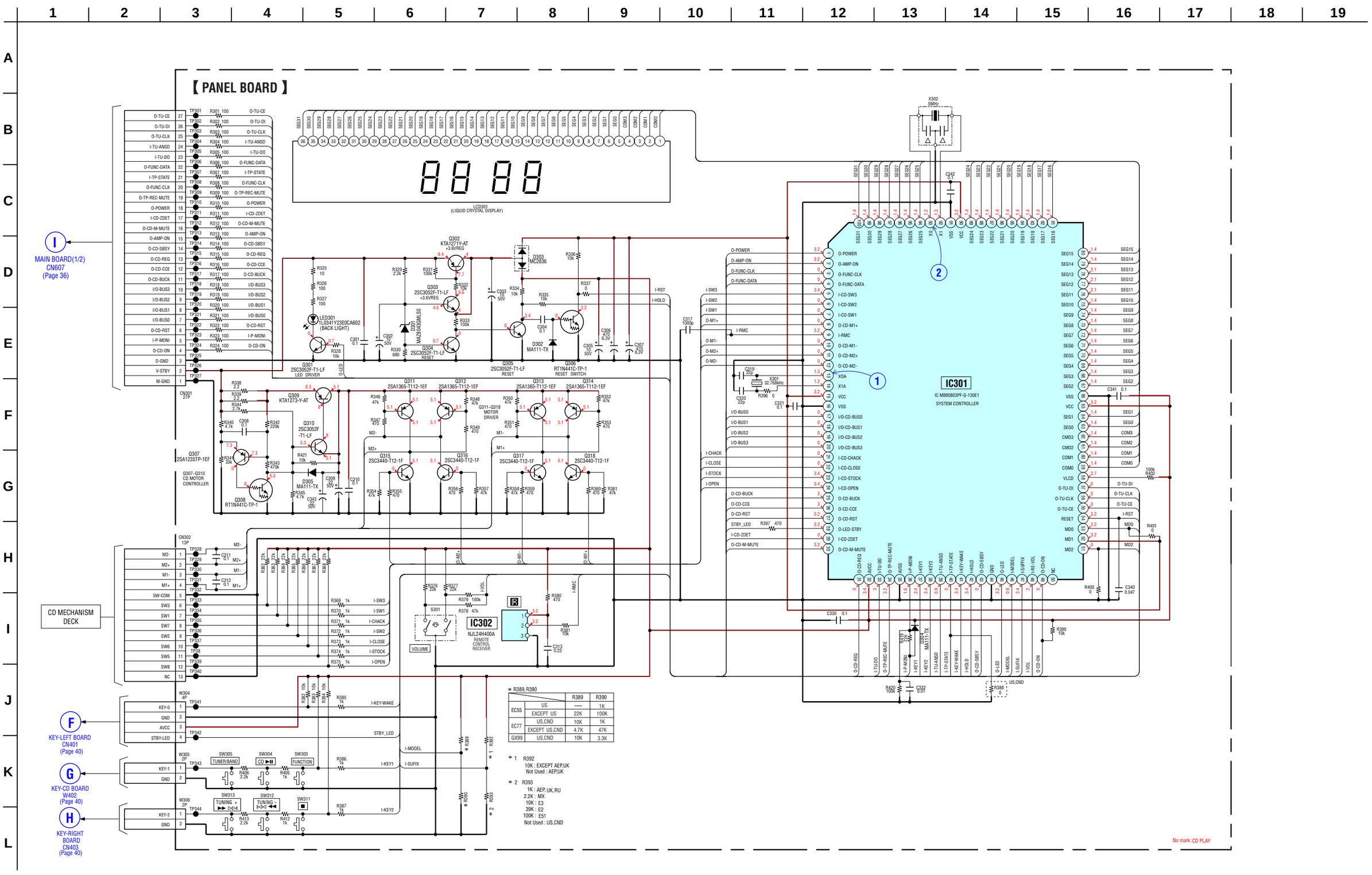

* R389, R390

		R389	R390
EC55	US	—	1K
	EXCEPT US	22K	100K
EC77	US,CND	10K	1K
	EXCEPT US,CND	4.7K	47K
GX99	US,CND	10K	3.3K

* 1 R392
10K : EXCEPT AEP,UK
Not Used : AEP,UK

* 2 R393
1K : AEP, UK, RU
2.2K : MX
10K : E3
39K : E2
100K : E51
Not Used : US,CND

7-11. PRINTED WIRING BOARDS — KEY SECTION —

• See page 29 for Circuit Boards Location.

:Uses unleaded solder.

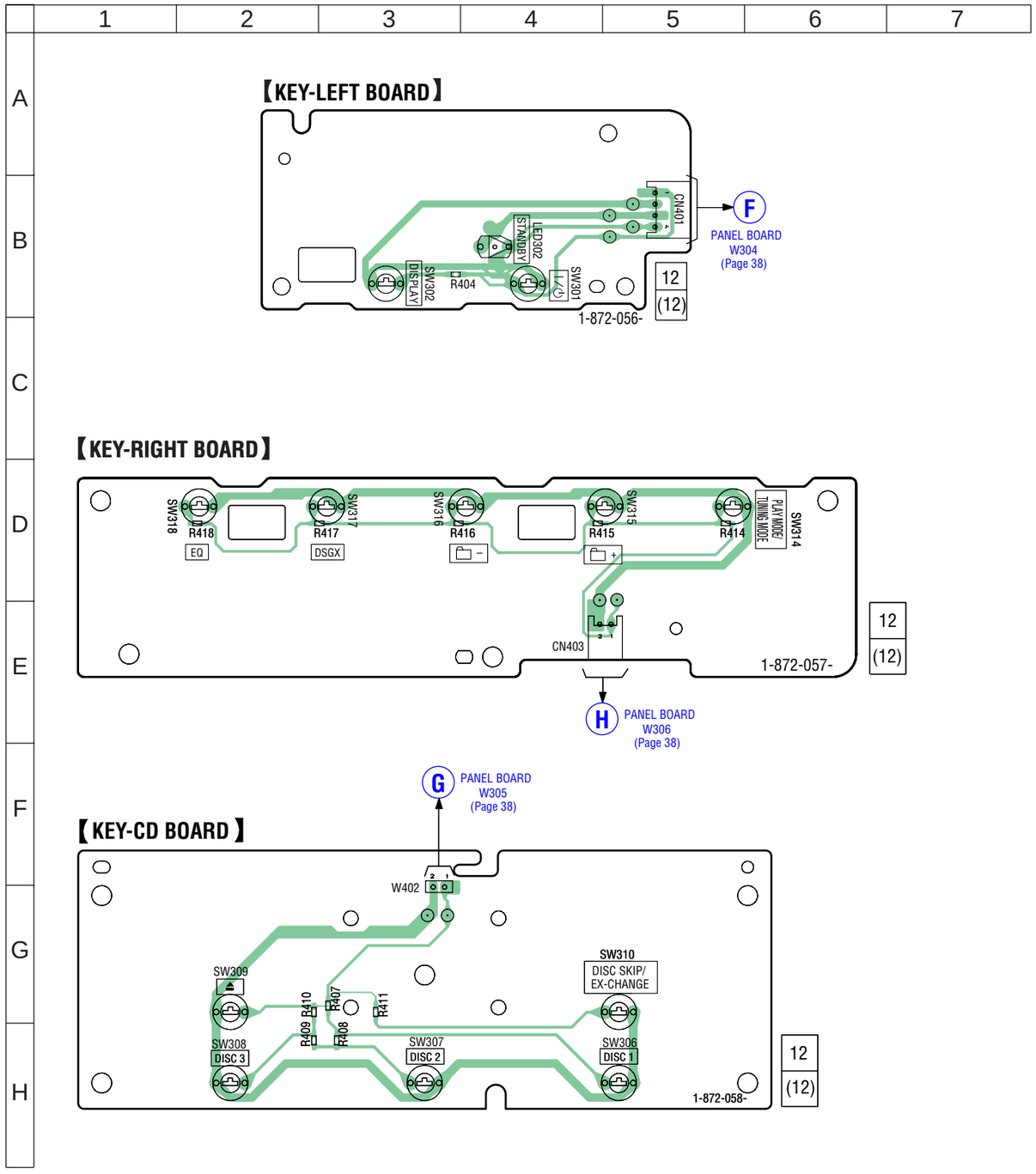

7-12. SCHEMATIC DIAGRAM — KEY SECTION —

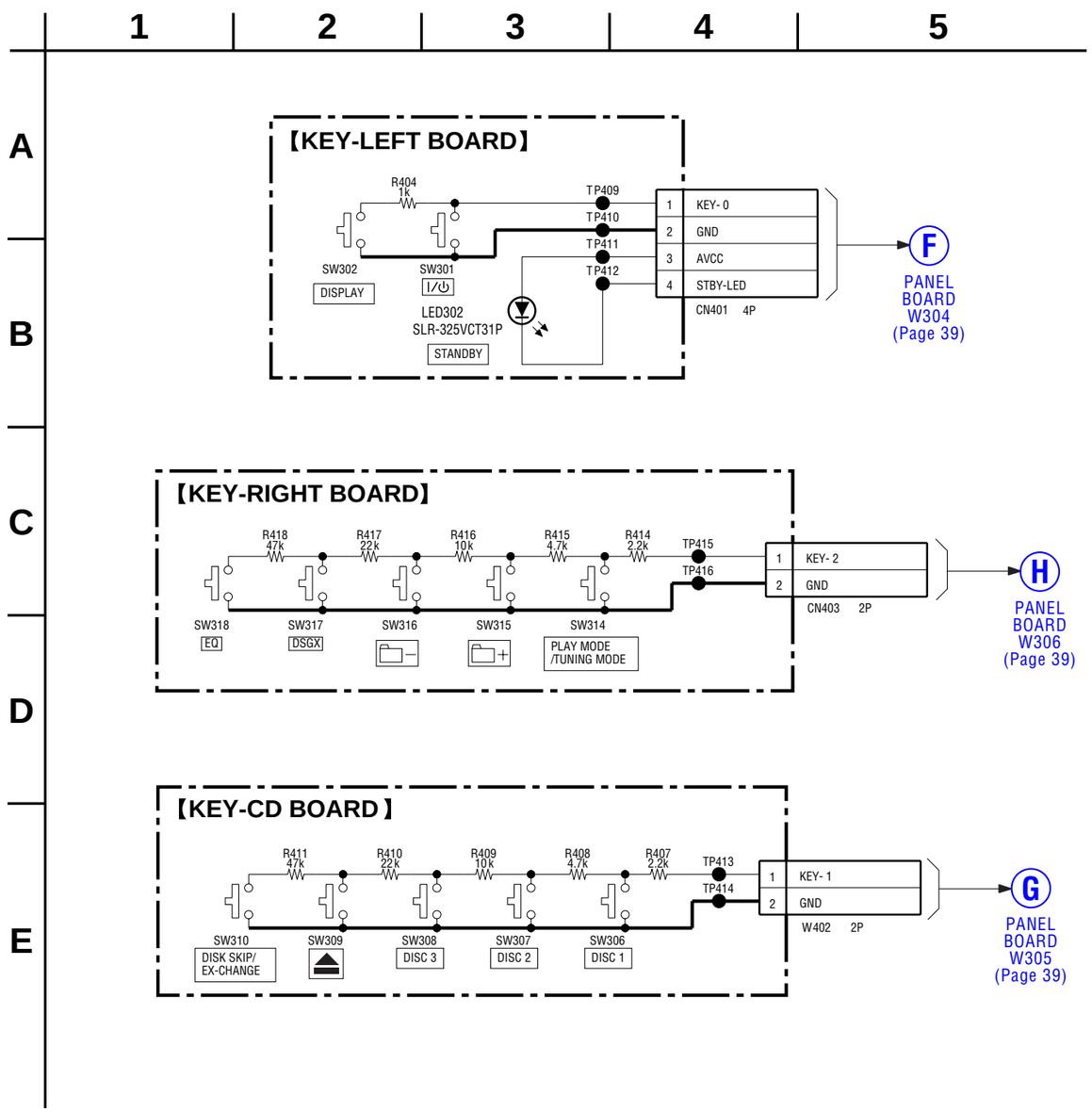

7-13. PRINTED WIRING BOARD — HI-AMP BOARD —

• See page 29 for Circuit Boards Location. :Uses unleaded solder.

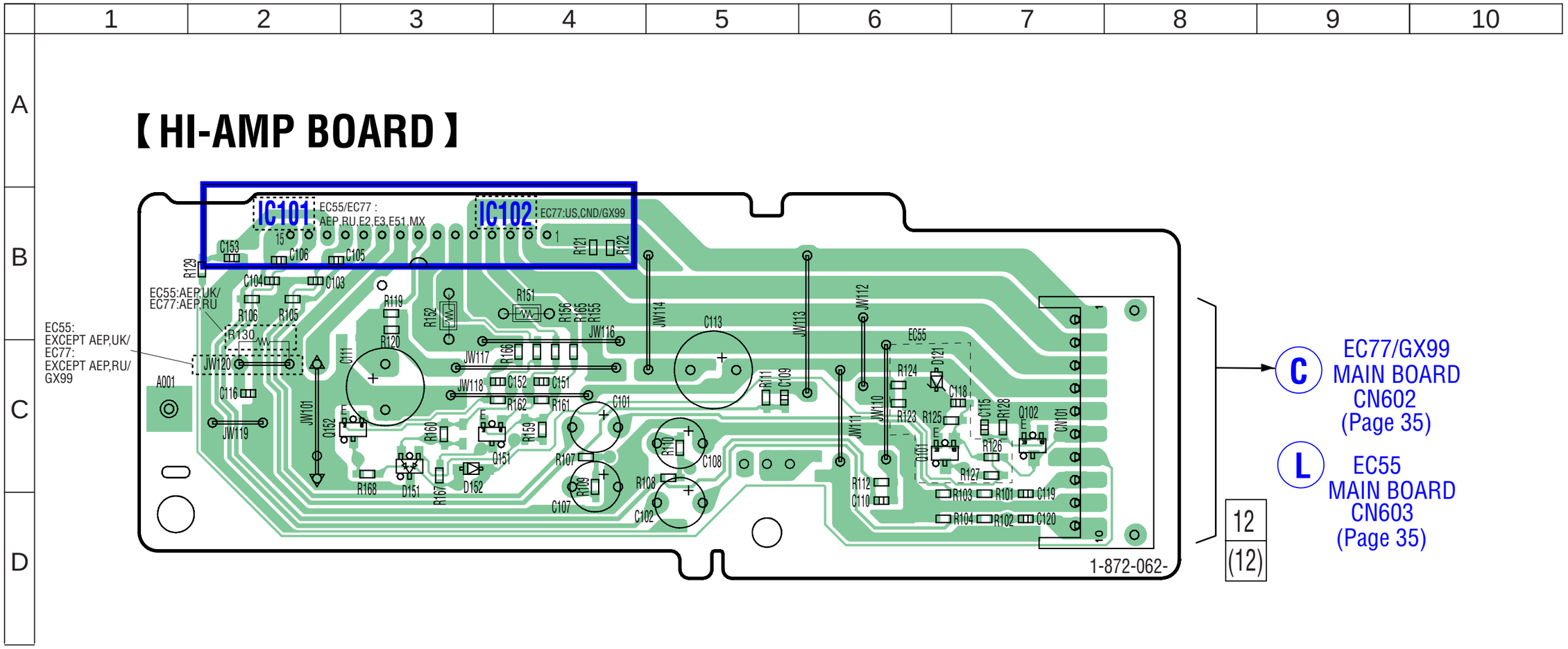

• **Semiconductor Location**

Ref. No.	Location
D121	C-6
D151	D-3
D152	C-3
IC101	B-2
IC102	B-3
Q101	C-6
Q102	C-7
Q151	C-3
Q152	C-2

7-14. SCHEMATIC DIAGRAM — HI-AMP BOARD —

• See page 50 for IC Block diagram.

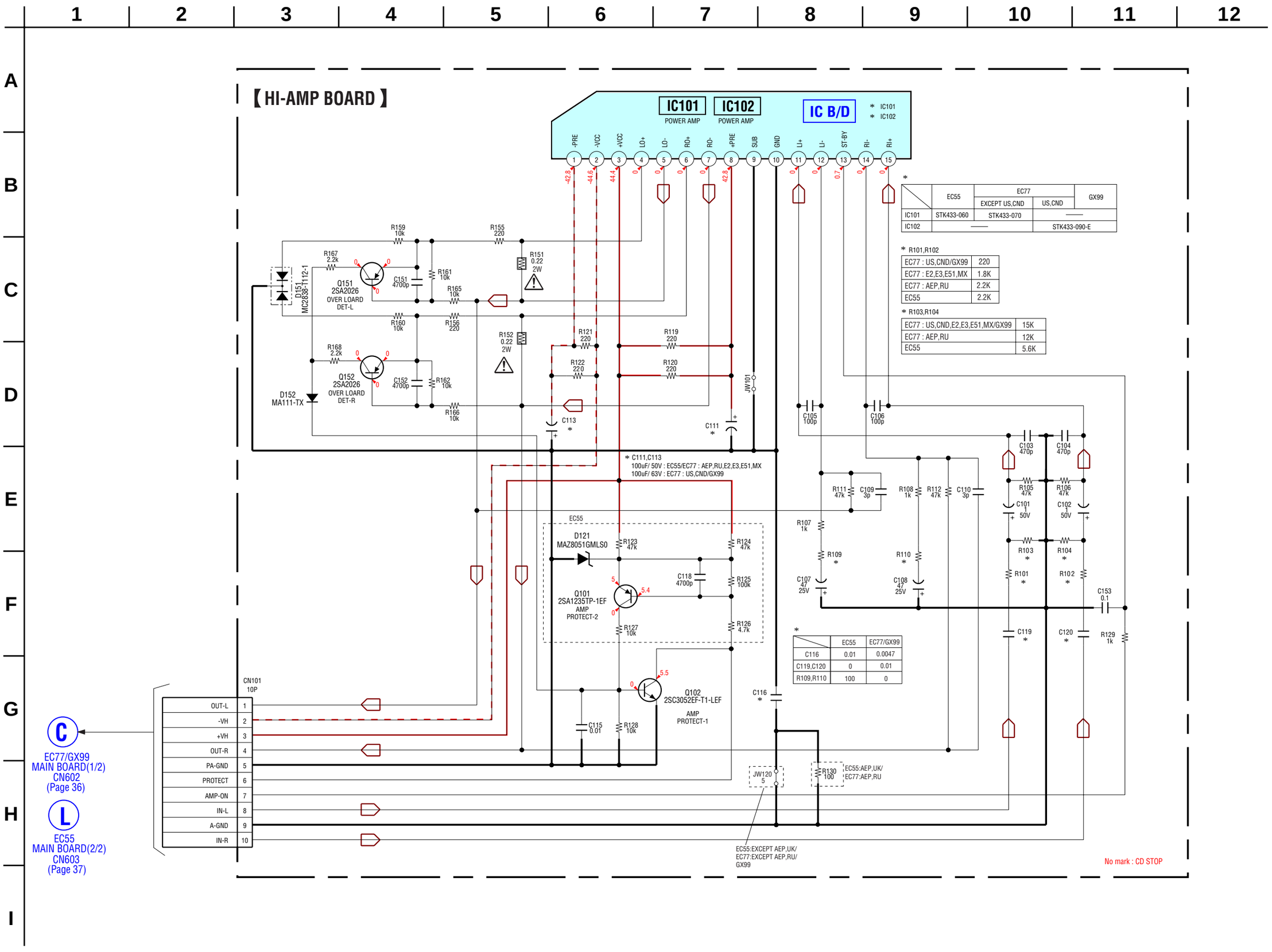

	EC55	EC77 EXCEPT US,CND	EC77 US,CND	GX99
IC101	STK433-060	STK433-070	——	
IC102	——		STK433-090-E	

* R101,R102

EC77 : US,CND/GX99	220
EC77 : E2,E3,E51,MX	1.8K
EC77 : AEP,RU	2.2K
EC55	2.2K

* R103,R104

EC77 : US,CND,E2,E3,E51,MX/GX99	15K
EC77 : AEP,RU	12K
EC55	5.6K

	EC55	EC77/GX99
C116	0.01	0.0047
C119,C120	0	0.01
R109,R110	100	0

7-15. PRINTED WIRING BOARD — LOW-AMP BOARD (EC77/GX99) —

• See page 29 for Circuit Boards Location. :Uses unleaded solder.

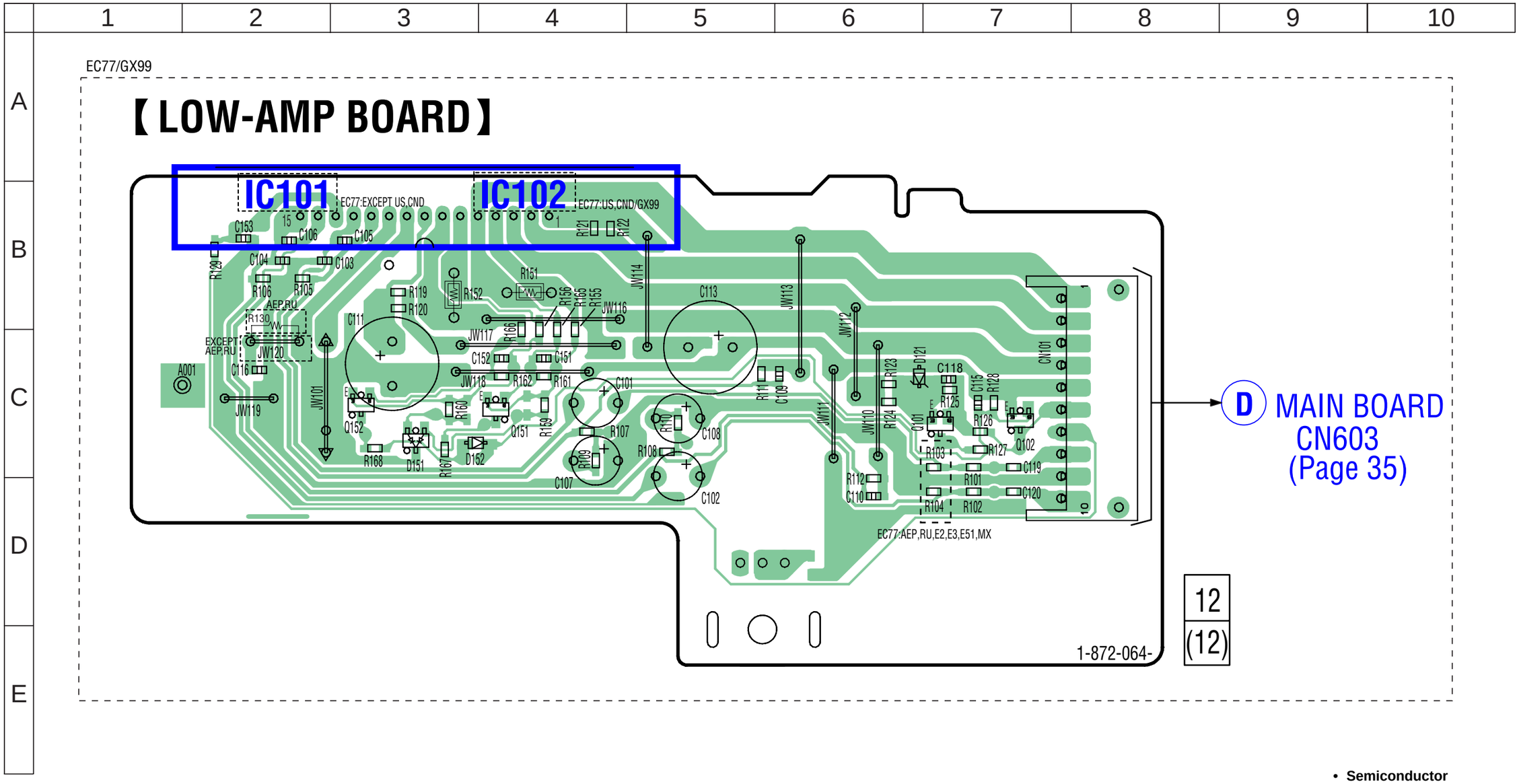

• **Semiconductor Location**

Ref. No.	Location
D151	C-3
D152	C-3
IC101	B-2
IC102	B-4
Q101	C-6
Q102	C-7
Q151	C-4
Q152	C-3

7-16. SCHEMATIC DIAGRAM — LOW-AMP BOARD (EC77/GX99) —

• See page 50 for IC Block diagram.

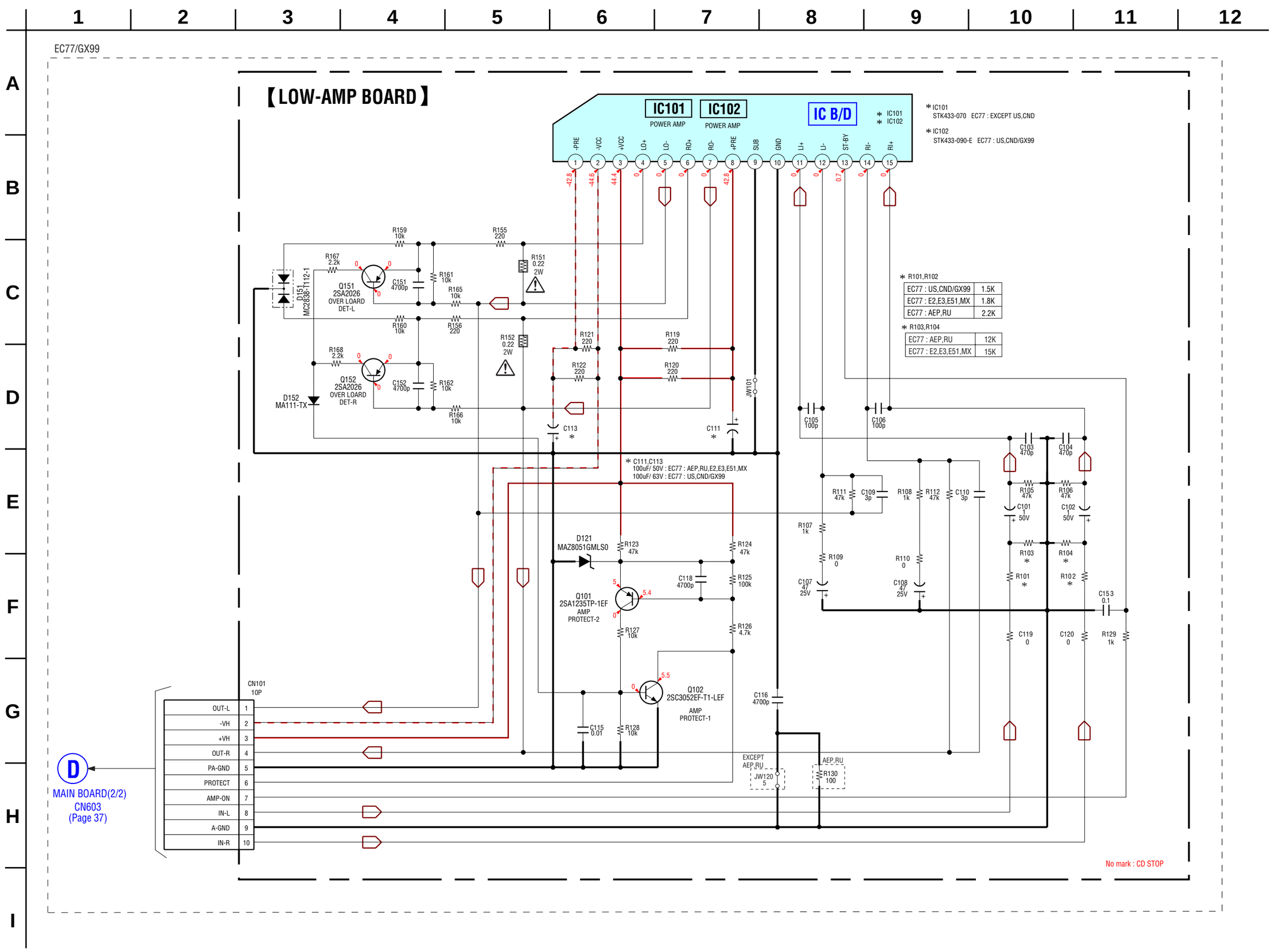

7-17. PRINTED WIRING BOARDS — DECK SECTION (EXCEPT US, CND) —

- See page 29 for Circuit Boards Location. :Uses unleaded solder.

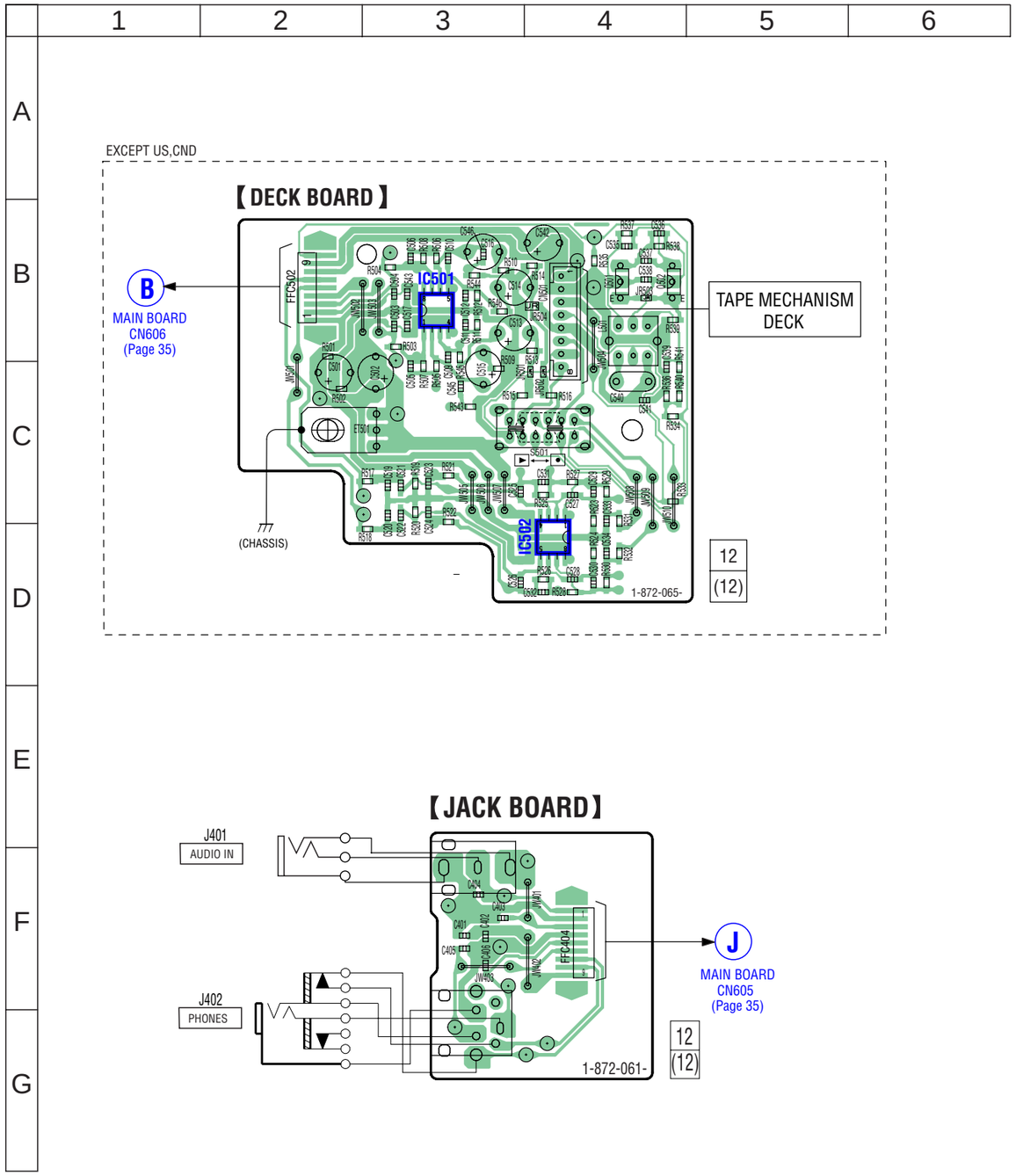

7-18. SCHEMATIC DIAGRAM — DECK SECTION (EXCEPT US, CND) —

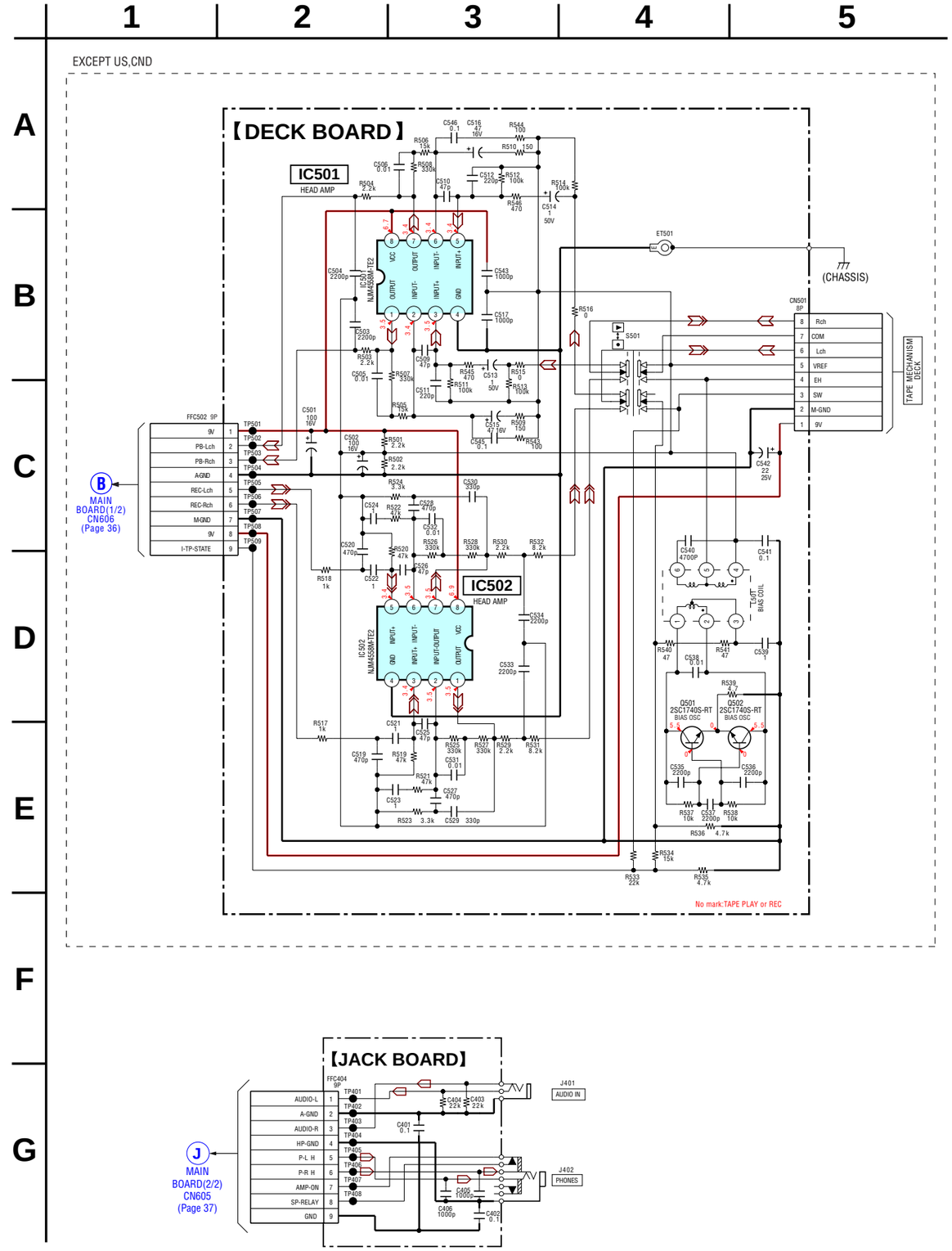

7-19. PRINTED WIRING BOARD — PT BOARD (EXCEPT EC55: US, CND) —

- See page 29 for Circuit Boards Location. :Uses unleaded solder.

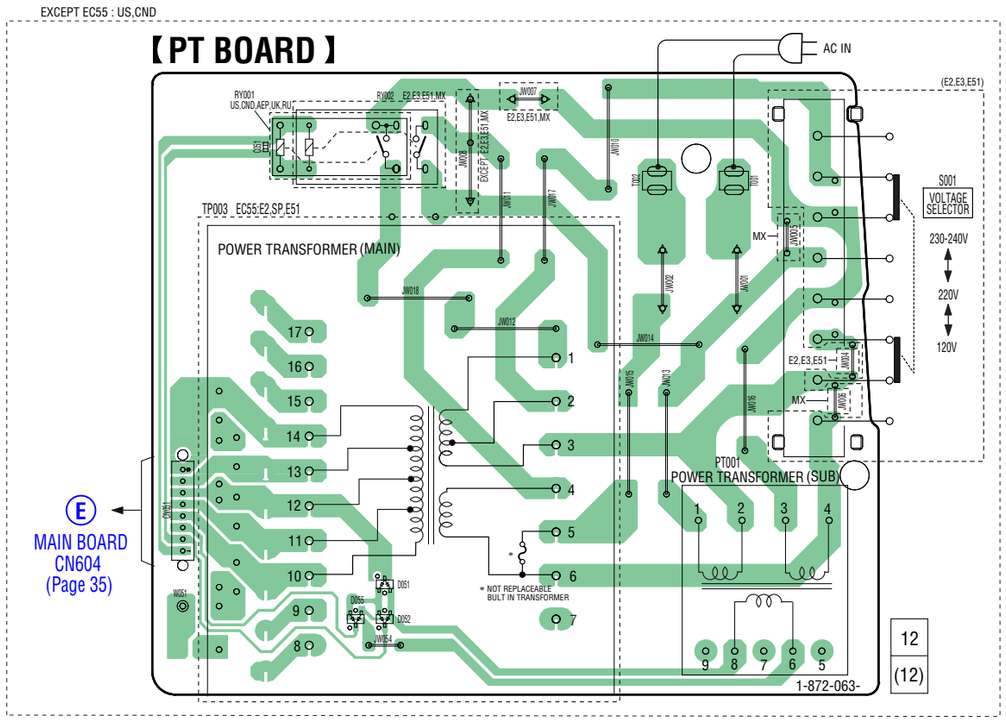

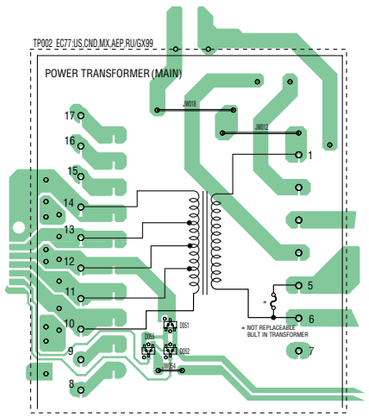

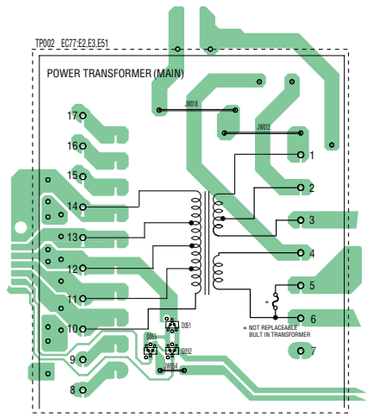

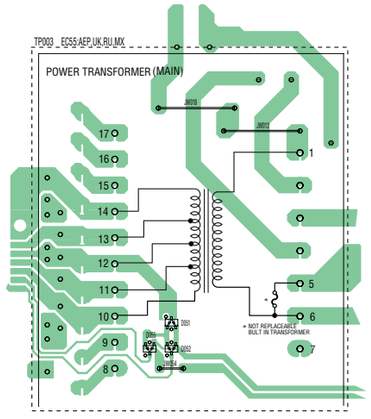

- **Semiconductor Location**

Ref. No.	Location
D051	E-3
D052	E-3
D055	E-3

7-20. SCHEMATIC DIAGRAM — PT BOARD (EXCEPT EC55: US, CND) —

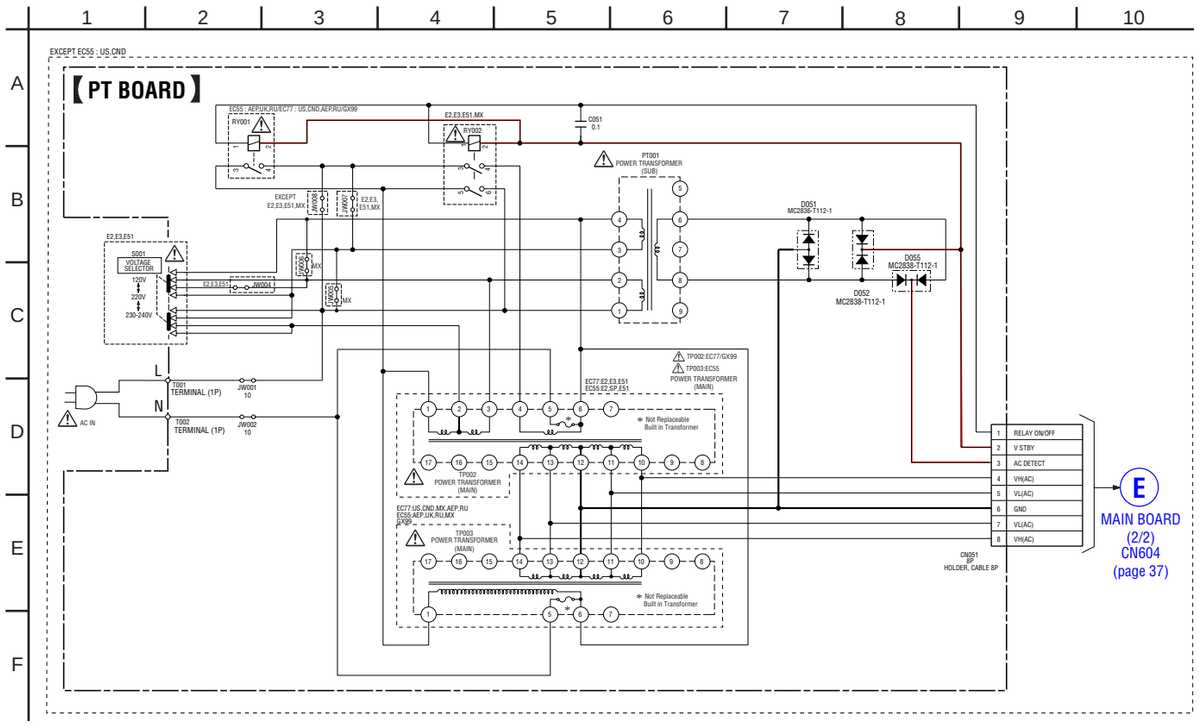

7-21. PRINTED WIRING BOARD — PT (U) BOARD (EC55: US, CND) —

- **See page 29 for Circuit Boards Location.** **:Uses unleaded solder.**

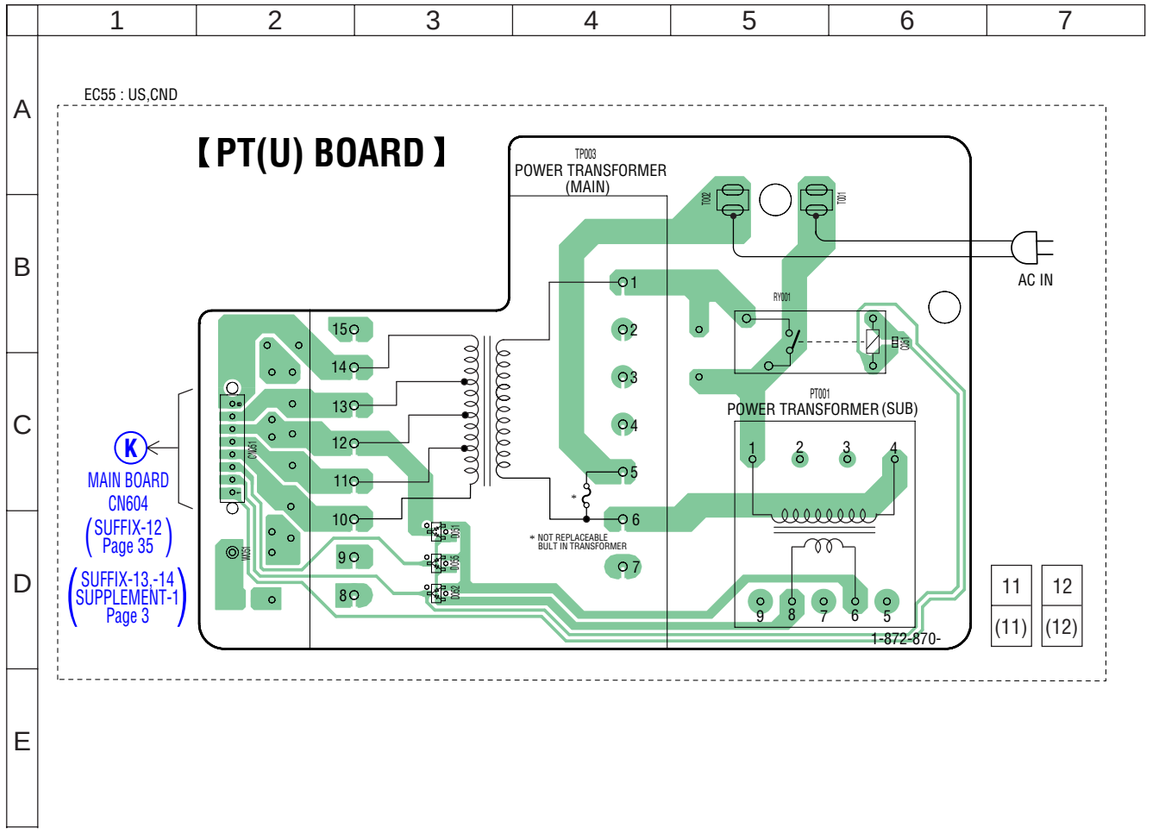

7-22. SCHEMATIC DIAGRAM — PT (U) BOARD (EC55: US, CND) —

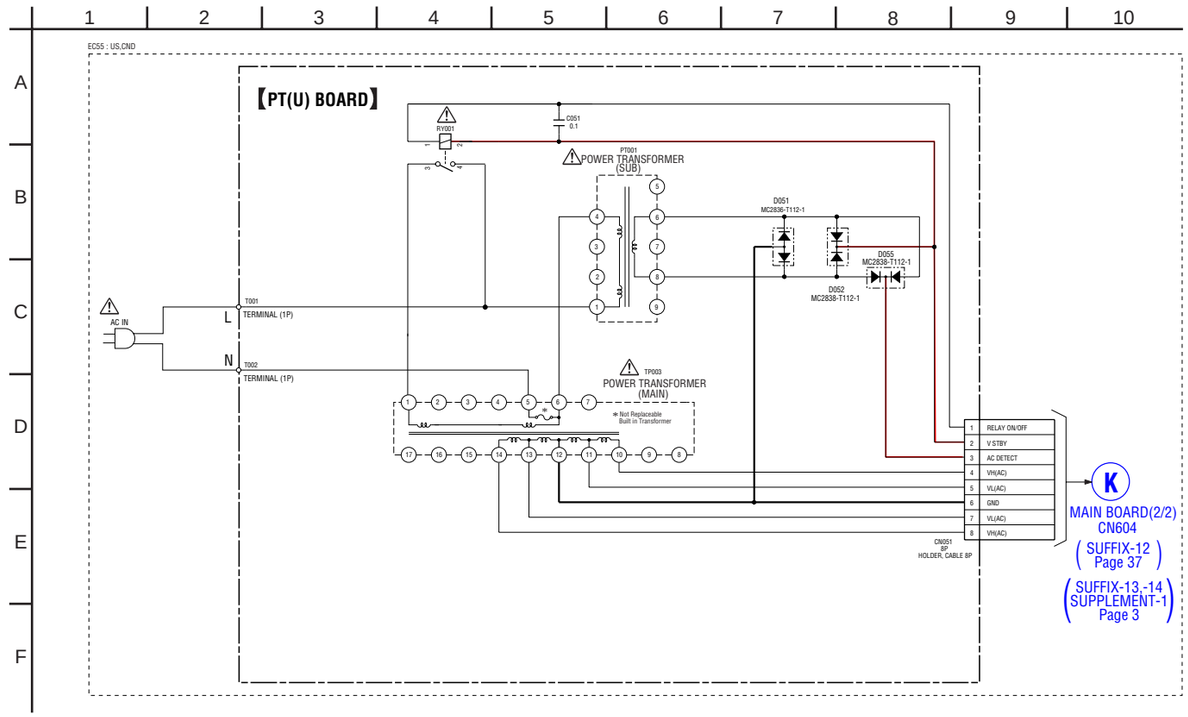

- **Semiconductor Location**

Ref. No.	Location
D051	D-3
D052	D-3
D055	D-3

- **Waveforms**

– BD90 Board –

① **IC101 ⑧① (RFI) (CD PLAY mode)**

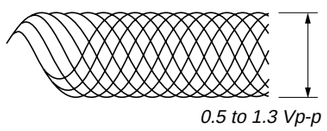

200 mV/DIV, 500 ns/DIV

② **IC101 ㉔ (XO) (CD PLAY mode)**

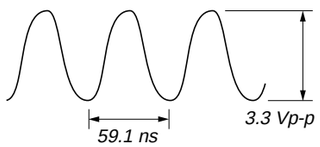

1 V/DIV, 20 ns/DIV

– PANEL Board –

① **IC301 ⑬ (X0A)**

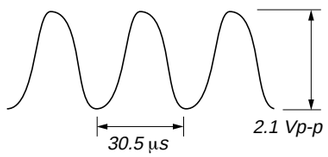

500 mV/DIV, 10 µs/DIV

② **IC301 ⑨③ (X0)**

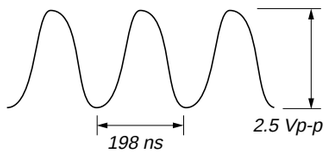

1 V/DIV, 100 ns/DIV

– MAIN Board –

① **IC801 ⑳ (XOUT)**

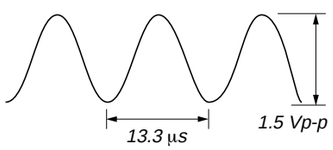

500 mV/DIV, 4 µs/DIV

- **IC Block Diagrams**

– BD90 Board –

IC201 TK63115SCL-G@GT

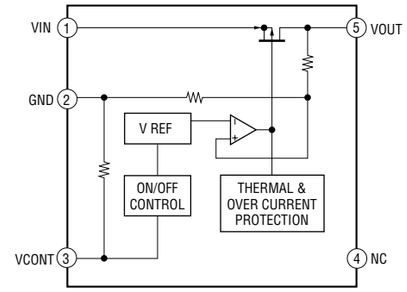

IC401 BA5826SFP-E2

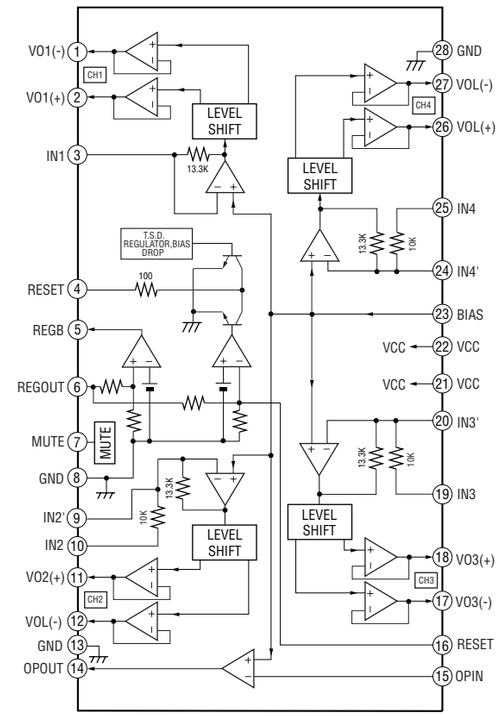

– MAIN Board –

IC602 R2S15904SP

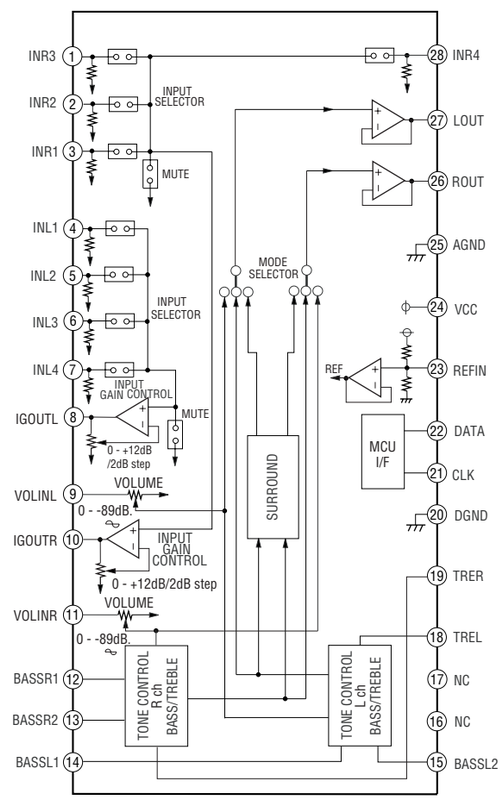

– MAIN Board –

IC801 LV23003VA

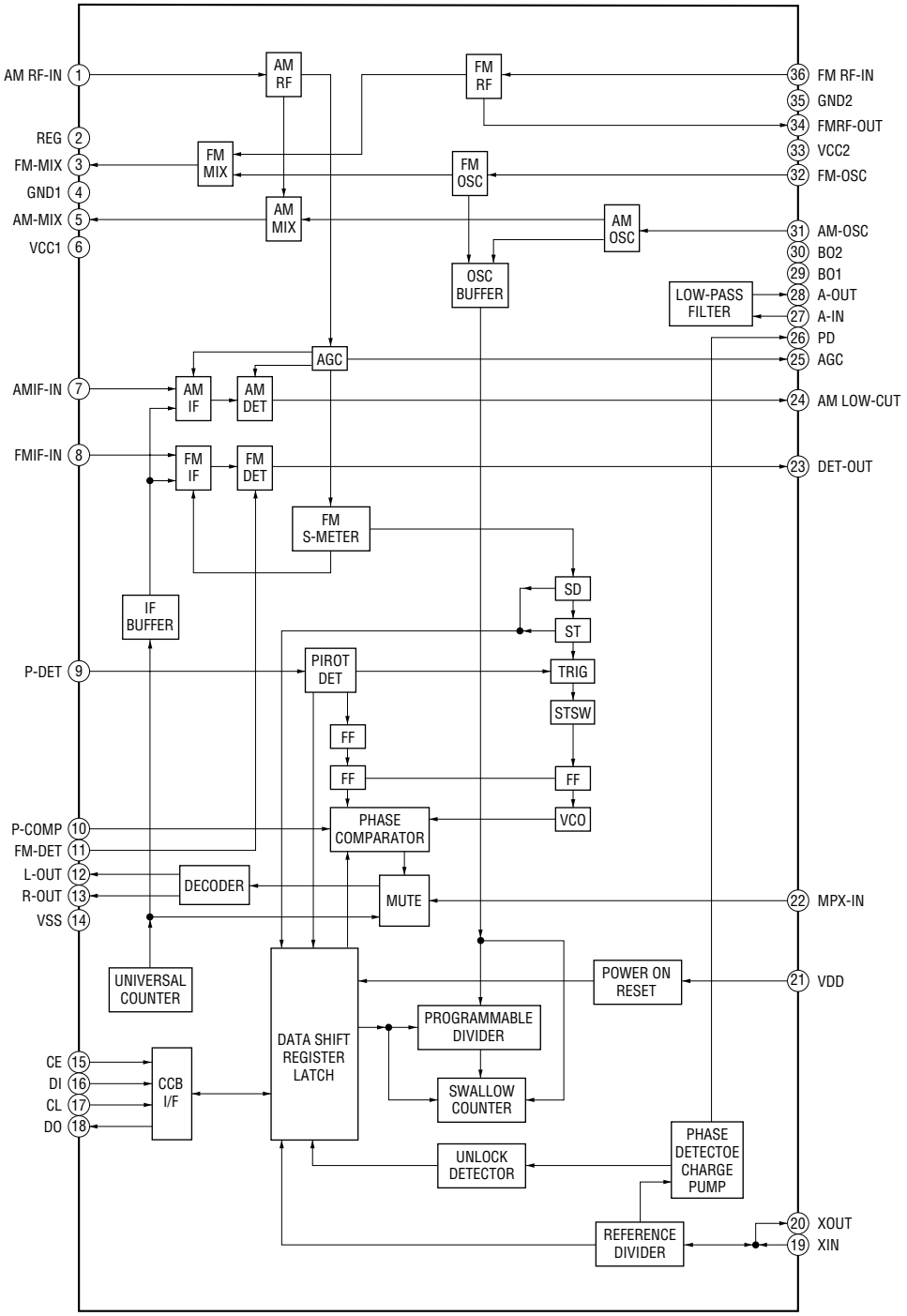

– HI-AMP Board –

IC101 STK433-060 (EC55)/STK433-070 (EC77: EXCEPT US, CND)
IC102 STK433-090-E (EC77: US, CND/GX99)

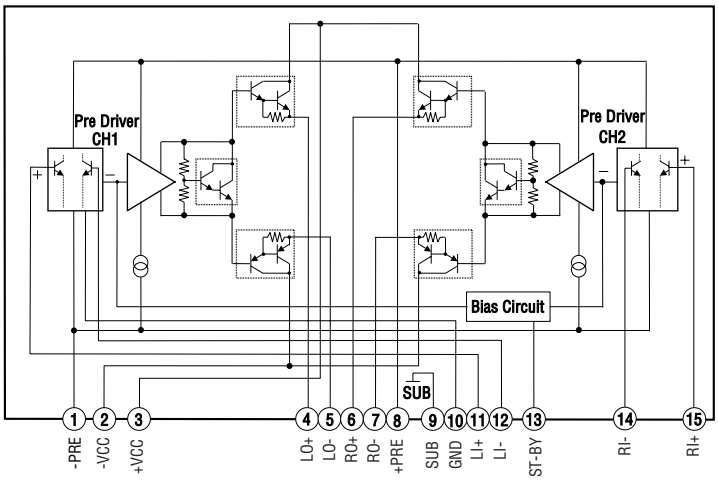

– LOW-AMP Board (EC77/GX99) –

IC101 STK433-070 (EC77: EXCEPT US, CND)
IC102 STK433-090-E (EC77: US, CND/GX99)

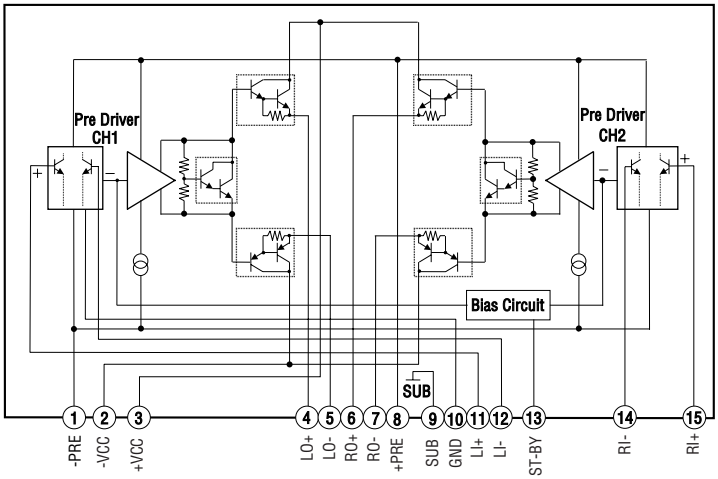

• **IC Pin Function Description**

BD90 BOARD IC101 TC94A70FG-006 (RF AMP, DSP, MP3)

Pin No.	Pin Name	I/O	Description
1	AVSS3	—	Ground terminal (Used CD analog 3.3V)
2	RFZi	I	RF ripple zero cross signal input terminal
3	RFRP	O	RF ripple signal output terminal
4	SBAD/RFDC	O	Select terminal of sub beam output and RF peak detect signal (Not used (Open))
5	FEi	O	Focus error signal output terminal (Not used (Open))
6	TEi	O	Tracking error signal output terminal (Not used (Open))
7	TEZi	I	Tracking error signal input terminal (Used zero cross)
8	AVDD3	—	Power supply terminal (Used CD analog 3.3V)
9	FOo	O	Focus servo equalizer output terminal
10	TRo	O	Tracking servo equalizer output terminal
11	VREF	—	REF of analog power supply terminal
12	FMo	O	Feed servo equalizer output terminal
13	DMo	O	Disc servo equalizer output terminal
14	VSSP3	—	Ground terminal (Used DSP VOC 3.3V)
15	VCOi	O	PD output terminal (Used VCO)
16	VDDP3	—	Power supply terminal (Used DSP VCO 3.3V)
17	VDD1	—	Power supply terminal (Used digital 1.5V)
18	VSS1	—	Ground terminal (Used digital 1.5V)
19	FGiN	I	FG signal input terminal (Used CAV) (Not used (Fixed to “L”))
20	Io0(/HSo)	I	Play speed mode flag input terminal
21	Io1(/UHSo)	I	Play speed mode flag input terminal (Not used (Open))
22	XVSS3	—	Ground terminal (Used system clock 3.3V)
23	Xi	I	System clock input terminal (16.934MHz)
24	Xo	O	System clock output terminal (16.934MHz)
25	XVDD3	—	Power supply terminal (Used system clock 3.3V)
26	DVSS3	—	Ground terminal (Used DAC)
27	Ro	O	Audio R-ch data output terminal
28	DVDD3	—	Power supply terminal (Used DAC 3.3V)
29	DVR	—	REF voltage terminal (Used DAC)
30	Lo	O	Audio L-ch data output terminal
31	DVSS3	—	Ground terminal (Used DAC 3.3V)
32	VDDT3	—	Power supply terminal (Used Digital I/O 3.3V)
33	VSS1	—	Ground terminal (Used Digital 3.3V)
34	VDD1	—	Power supply terminal (Used digital 1.5V)
35	VDDM1	—	Power supply terminal (Used 1M bit SRAM 1.5V)
36	SRAMSTB	I	1M bit SRAM standby input terminal (Not used (Fixed to “L”))
37	/RST	I	Reset signal input terminal
38	BUS0	I	Data input terminal (BUS line)
39	BUS1	I	Data input terminal (BUS line)
40	BUS2(So)	I	Data input terminal (Serial output)
41	BUS3(Si)	I	Data input terminal (Serial input)
42	BUCK(CLK)	I	BUS clock input terminal (Serial clock input)
43	/CCE	I	Clip enable input terminal (U-com interface)
44	TEST	I	Test setting terminal (Not used (Fixed to “L”))
45	IRQ	I	Cut in DSP input terminal (Not used (Fixed to “L”))
46	AoUT3(Po4)	O	BSIF ST-REQ signal output terminal (Not used (Open))
47	AoUT2(Po5)	O	Audio data output 2 terminal (Not used (Open))

Pin No.	Pin Name	I/O	Description
48	Pio0	O	REQ output terminal
49	Pio1	I	General purpose I/O input terminal (Not used (Open))
50	Pio2	I	BSIF GATE signal input terminal (Not used (Open))
51	Pio3	I	General purpose I/O input terminal (Not used (Open))
52	VSS1	—	Ground terminal (Digital 3.3V)
53	VDDT3	—	Power supply terminal (Digital I/O 3.3V)
54	SBSY	O	Sub code block sync output terminal
55	SBOK/FOK	O	Q data CRCC judgment output terminal (Not used (Open))
56	IPF	O	Correct flag output terminal (Not used (Open))
57	SFSY/LOCK	O	Servo register read clock output terminal (Not used (Open))
58	ZDET	O	DAC zero data detect flag output terminal
59	GPIN	I	General purpose input terminal (Not used (Fixed to “L”))
60	MS	I	U-com I/F mode select input terminal (Fixed to “H”)
61	DoUT(Po6)	O	Digital output terminal (Not used (Open))
62	AoUT1(Po7)	O	Audio data output terminal (Not used (Open))
63	BCK(Po8)	O	Bit clock output terminal (Audio output) (Not used (Open))
64	LRCK(Po9)	O	Channel clock output terminal (Not used (Open))
65	AiN(Pi4)	I	Data input terminal (Used DAC) (Not used (Fixed to “L”))
66	BCKi(Pi5)	I	Bit clock input terminal (Used DAC) (Not used (Fixed to “L”))
67	LRCKi(Pi6)	I	Channel clock input terminal (Used DAC) (Not used (Fixed to “L”))
68	VDD1	—	Power supply terminal (Digital 1.5V)
69	VSS1	—	Ground terminal (Digital 1.5V)
70	AWRC	O	VCO control output terminal (Used active wide range) (Not used (Open))
71	PVDD3	—	Power supply terminal (PLL 3.3V)
72	PDo	O	Phase error signal of EFM signal and PLCK signal output terminal
73	TMAXS	O	Output terminal of TMAX detect signal (Not used (Open))
74	TMAX	O	Output terminal of TMAX detect signal
75	LPFN	I	Reverse input terminal of AMP (PLL-LPF)
76	LPFo	O	Output terminal of AMP (PLL-LPF)
77	PVREF	—	1.65V REF power terminal (Only PLL)
78	VCoF	O	VCO filter output terminal
79	PVSS3	—	Ground terminal (PLL 3.3V)
80	SLCo	O	EFM slice level output terminal
81	RFi	I	RF signal input terminal
82	RFRPi	I	RF ripple signal input terminal
83	RFEQo	O	RF equalizer output terminal
84	VRo	O	1.65V REF voltage output terminal
85	RESiN	O	REF resister terminal (22k/0.01u)
86	VMDiR	—	REF voltage of APC circuit output terminal
87	TESTR	O	LPF terminal (RFEQO offset correct)
88	AGCi	I	RF signal adjustment AMP input terminal
89	RFo	O	RF signal AMP output terminal
90	RVDD3	—	3.3V Power supply terminal (RF AMP)
91	LDo	O	Laser diode AMP output terminal
92	MDi	I	Monitor photo diode AMP input terminal
93	RVSS3	—	Ground terminal (RF AMP 3.3V)
94	FNi2(C)	I	Main beam input terminal (Connect to pin diode C)
95	FNi1(A)	I	Main beam input terminal (Connect to pin diodeA)
96	FPi2(D)	I	Main beam input terminal (Connect to pin diode D)

Pin No.	Pin Name	I/O	Description
97	FPi1(B)	I	Main beam input terminal (Connect to pin diode B)
98	TPi(F)	I	Sub beam AMP input terminal (Connect to pin diode F)
99	TNPC	O	Capacitor connect terminal to the middle pointof TNI/TPI input register
100	TNi(E)	I	Sub beam AMP input terminal (Connect to pin diode E)

PANEL BOARD IC301 MB90803PF-G-130E1 (SYSTEM CONTROLLER)

Pin No.	Pin Name	I/O	Description
1	O-POWER	O	Power relay control signal output terminal
2	O-AMP-ON	O	AMP control signal output terminal
3	O-FUNC-CLK	O	Function select control serial data signal to IC602
4	O-FUNC-DATA	O	Function select control serial clock signal to IC602
5	I-CD-SW3	I	SW3 control input signal from CD
6	I-CD-SW2	I	SW2 control input signal from CD
7	I-CD-SW1	I	SW1 control input signal from CD
8	O-CD-M1+	O	M1+ control output signal terminal
9	I-RMC	I	Remote sensor input signal terminal
10	O-CD-M1–	O	M1– control output signal terminal
11	O-CD-M2+	O	M2+ control output signal terminal
12	O-CD-M2–	O	M2– control output signal terminal
13	X0A	O	Resonator output terminal (32.768KHz)
14	X1A	I	Resonator input terminal (32.768KHz)
15	VCC	—	Power supply terminal (+3.3V)
16	VSS	—	Ground terminal
17	I/O-CD-BUS0	O	CD data line to BD90
18	I/O-CD-BUS1	O	CD data line to BD90
19	I/O-CD-BUS2	O	CD data line to BD90
20	I/O-CD-BUS3	O	CD data line to BD90
21	I-CD-CHACK	I	CD chack switch (SW7) input terminal from BD90
22	I-CD-CLOSE	I	CD close switch (SW6) input terminal from BD90
23	I-CD-STOCK	I	CD stock switch (SW5) input terminal from BD90
24	I-CD-OPEN	I	CD open switch (SW8) input terminal from BD90
25	O-CD-BUCK	O	CD clock output terminal
26	O-CD-CCE	O	CD chip select enable output terminal
27	O-CD-RST	O	Zipang reset control output terminal
28	O-LED-STBY	O	STBY -LED control signal output terminal
29	I-CD-ZDET	O	ZDET output terminal
30	O-CD-M-MUTE	O	Motor driver mute signal output terminal
31	O-CD-REQ	O	CD DSP MP3 serial data request signal output terminal
32	AVCC	—	Power supply terminal (+3.3V)
33	I-TU-DO	O	TU data output signal terminal
34	O-TP-REC-MUTE	O	Tape REC mute signal output terminal (Except US, CND)
35	AVSS	—	Ground terminal
36	I-P-MONI	I	Power monitor signal input terminal
37	I-KEY1	I	KEY-CD board control signal (KEY-1) input terminal
38	I-KEY2	I	KEY-RIGHT board control signal (KEY-2) input terminal
39	I-TU-ANSD	I	Tuner analog SD input terminal
40	I-TP-STATE	I	Tape deck statement monitor terminal (US, CND not used (Fixed to “L”))
41	I-KEY-WAKE	I	KEY-LEFT board control signal (KEY-0) input terminal
42	I-HOLD	I	IC301 stop mode control input terminal
43	O-CD-SBSY	I	CD-SBSY signal input terminal
44	GND	—	Ground terminal
45	O-LED	O	LCD back light control output terminal
46	I-MODEL	I	Fixed model input terminal
47	I-SUFFIX	I	Fixed model suffix input terminal
48	I-RE-VOL	I	Input signal from the volume encoder

Pin No.	Pin Name	I/O	Description
49	O-CD-ON	I	CD power control signal input terminal
50	NC	O	No used (Open)
51	MD2	—	Use write (Not used (Fixed to “L”))
52	MD1	—	Use write (Not used (Fixed to “H”))
53	MD0	—	Use write (Not used (Fixed to “H”))
54	RESET	I	IC301 reset mode control input terminal
55	O-TU-CE	O	TU-CE signal output terminal
56	O-TU-CLK	O	TU-CLOCK signal output terminal
57	O-TU-DI	O	TU-DATA signal output terminal
58	VLCD	O	LCD voltage set output terminal
59	COM0	O	Common signal output to the LCD
60	COM1	O	Common signal output to the LCD
61	COM2	O	Common signal output to the LCD
62	CMO3	O	Common signal output to the LCD
63	SEG0	O	Segment signal output to the LCD
64	SEG1	O	Segment signal output to the LCD
65	VCC	—	Power supply terminal (+3.3V)
66	VSS	—	Ground terminal
67	SEG2	O	Segment signal output to the LCD
68	SEG3	O	Segment signal output to the LCD
69	SEG4	O	Segment signal output to the LCD
70	SEG5	O	Segment signal output to the LCD
71	SEG6	O	Segment signal output to the LCD
72	SEG7	O	Segment signal output to the LCD
73	SEG8	O	Segment signal output to the LCD
74	SEG9	O	Segment signal output to the LCD
75	SEG10	O	Segment signal output to the LCD
76	SEG11	O	Segment signal output to the LCD
77	SEG12	O	Segment signal output to the LCD
78	SEG13	O	Segment signal output to the LCD
79	SEG14	O	Segment signal output to the LCD
80	SEG15	O	Segment signal output to the LCD
81	SEG16	O	Segment signal output to the LCD
82	SEG17	O	Segment signal output to the LCD
83	SEG18	O	Segment signal output to the LCD
84	SEG19	O	Segment signal output to the LCD
85	SEG20	O	Segment signal output to the LCD
86	SEG21	O	Segment signal output to the LCD
87	SEG22	O	Segment signal output to the LCD
88	SEG23	O	Segment signal output to the LCD
89	SEG24	O	Segment signal output to the LCD
90	VCC	—	Power supply terminal (+3.3V)
91	VSS	—	Ground terminal
92	X1	I	Resonator input terminal (5MHz)
93	X0	O	Resonator output terminal (5MHz)
94	SEG25	O	Segment signal output to the LCD
95	SEG26	O	Segment signal output to the LCD
96	SEG27	O	Segment signal output to the LCD
97	SEG28	O	Segment signal output to the LCD

Pin No.	Pin Name	I/O	Description
98	SEG29	O	Segment signal output to the LCD
99	SEG30	O	Segment signal output to the LCD
100	SEG31	O	Segment signal output to the LCD

SECTION 8
EXPLODED VIEWS

NOTE:

- -XX and -X mean standardized parts, so they may have some difference from the original one.
- Items marked "*" are not stocked since they are seldom required for routine service. Some delay should be anticipated when ordering these items.
- The mechanical parts with no reference number in the exploded views are not supplied.
- Abbreviation
  AR : Argentine model
  AUS : Australian model
  CND : Canadian model
  E2 : 120V AC area in E model
  E3 : 240V AC area in E model
  E51 : Chilean and Peruvian model
  KR : Korean model
  MX : Mexican model
  RU : Russian model
  SP : Singapore model

The components identified by mark ⚠ or dotted line with mark ⚠ are critical for safety. Replace only with part number specified.

Les composants identifiés par une marque ⚠ sont critiques pour la sécurité.
Ne les remplacer que par une pièce portant le numéro spécifié.

8-1. OVERALL SECTION

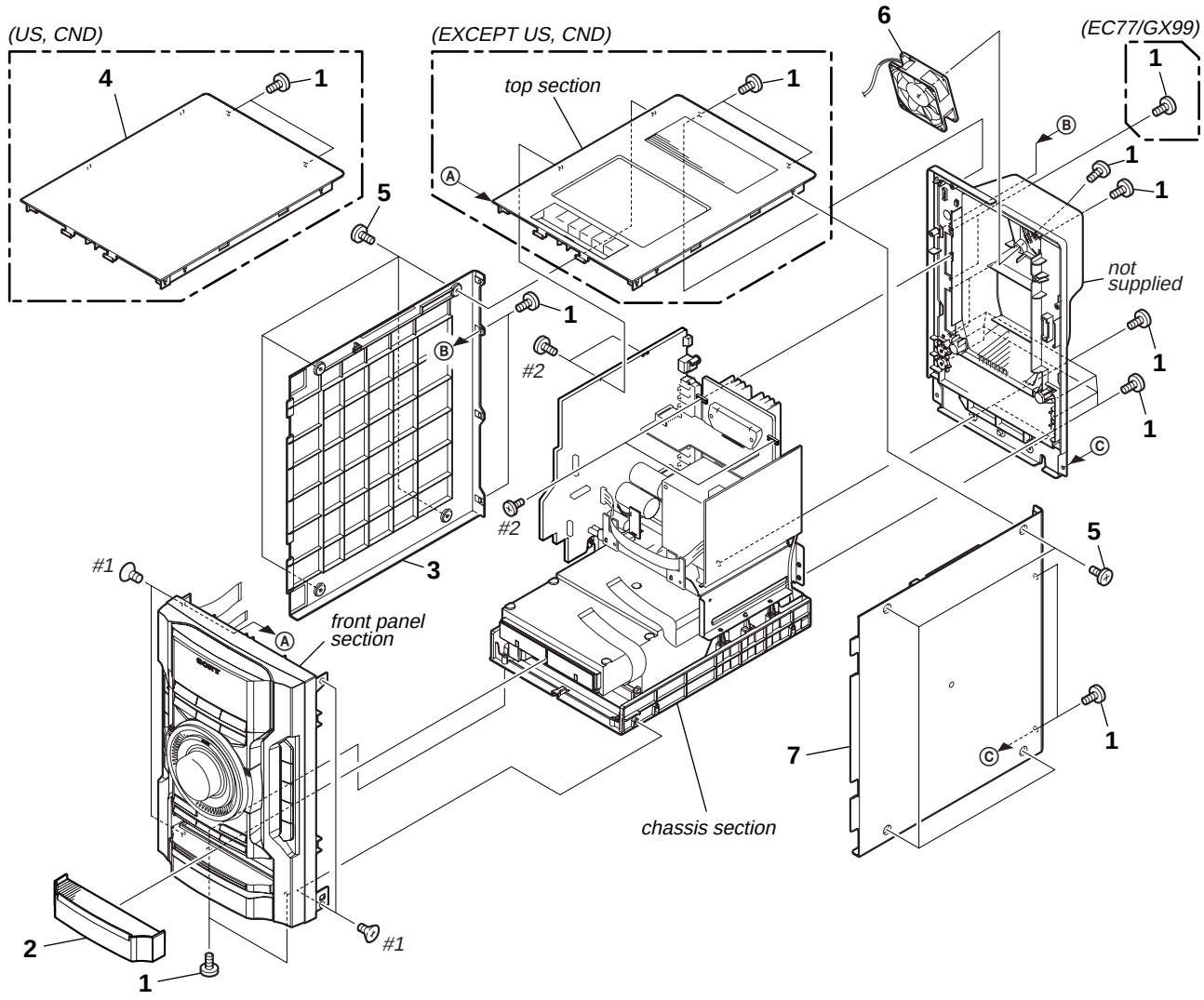

Ref. No.	Part No.	Description	Remark
1	3-254-143-11	SCREW (B3), (+) BV TAPPING	
2	2-890-827-01	DOOR (CD)	
3	2-890-831-01	PANEL (L), SIDE (US, CND)	
3	2-890-831-11	PANEL (L), SIDE (EXCEPT US, CND)	
4	2-890-829-01	PANEL (TOP) (US, CND)	
5	3-363-099-32	SCREW (CASE 3 TP2)	
6	1-787-319-12	FAN, DC (EC55/EC77: AEP, RU, E2, E3, E51, MX, AR, AUS)	
6	1-787-344-11	FAN, DC (EC77: US, CND/GX99)	
7	2-890-830-01	PANEL (R), SIDE (US, CND)	
7	2-890-830-11	PANEL (R), SIDE (EXCEPT US, CND)	
#1	7-685-247-14	SCREW +KTP 3X10 TYPE2 NON-SLIT	
#2	7-685-647-79	SCREW +BVTP 3X10 TYPE2 N-S	

8-2. FRONT PANEL SECTION

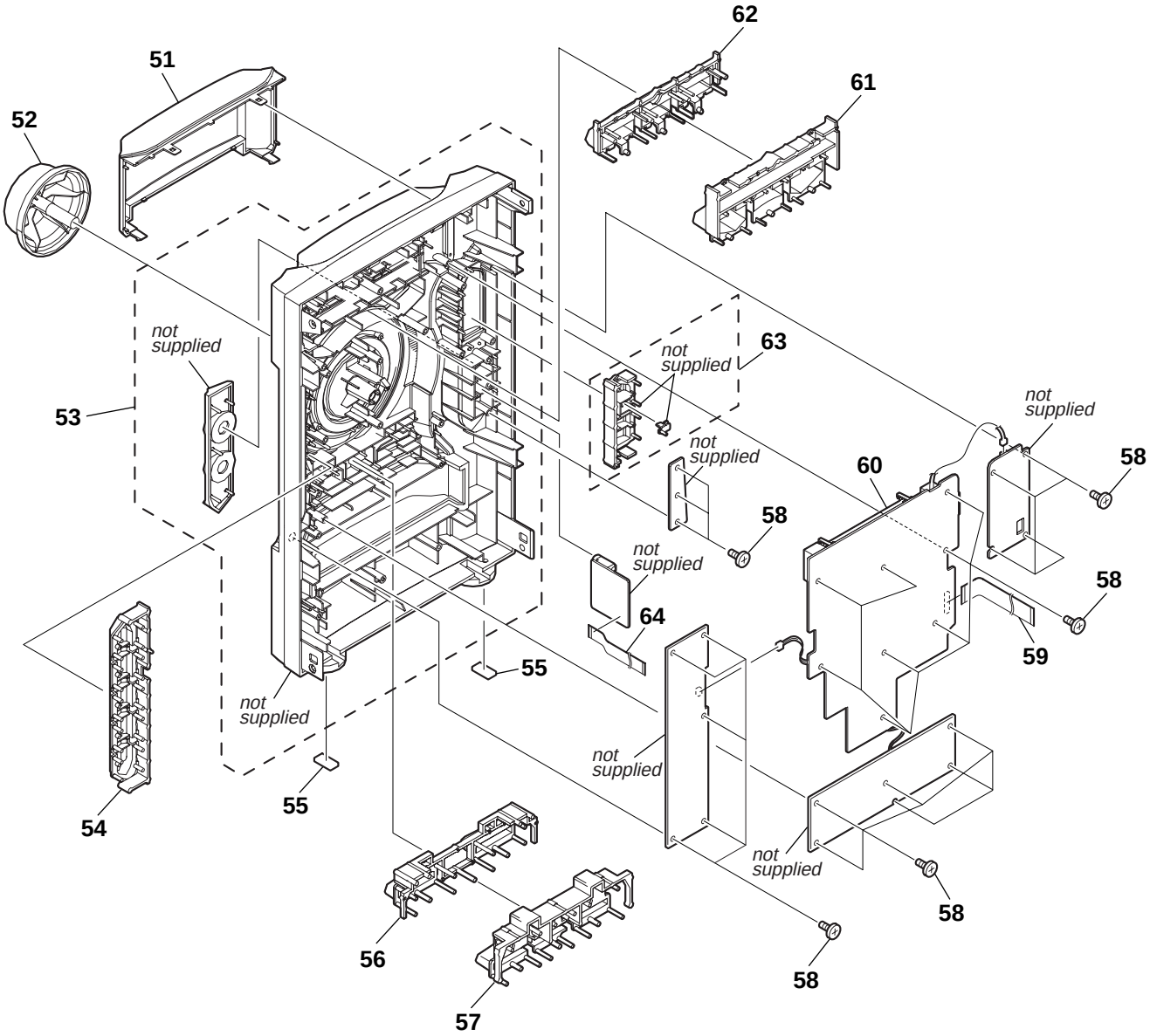

Ref. No.	Part No.	Description	Remark
51	2-890-817-01	WINDOW (EC55: US, CND, AEP, UK, RU, KR, SP, AUS)	
51	2-890-817-11	WINDOW (EC55: E2, E51, MX, AR)	
51	2-890-817-21	WINDOW (EC77: US, CND)	
51	2-890-817-31	WINDOW (EC77: E2, E51, MX, AR)	
51	2-890-817-41	WINDOW (GX99)	
51	2-890-817-51	WINDOW (EC77: AEP, RU, E3, AUS)	
52	2-890-826-01	KNOB (VOL)	
53	X-2177-497-1	PANEL (ASSY),FRONT (EC55: US, CND/EC77: US, CND)	
53	X-2177-498-1	PANEL ASSY, FRONT (EC55: EXCEPT US, CND)	
53	X-2177-499-1	PANEL ASSY, FRONT (EC77: EXCEPT US, CND)	
53	X-2177-500-1	PANEL ASSY, FRONT (GX99)	
54	2-890-823-01	BUTTON (DSGX)	
55	4-225-252-01	CUSHION (FOOT)	
56	2-890-820-01	BUTTON (EJECT)	
57	2-890-821-01	BUTTON (DISC)	
58	4-951-620-01	SCREW (2.6X8), +BVTP	
59	1-833-800-21	CABLE, FLEXIBLE FLAT (27 CORE)	
60	A-1218-504-A	PANEL BOARD, COMPLETE (GX99)	
60	A-1218-536-A	PANEL BOARD, COMPLETE (EC77: US, CND)	
60	A-1218-562-A	PANEL BOARD, COMPLETE (EC77: AEP)	
60	A-1218-590-A	PANEL BOARD, COMPLETE (EC77: RU)	
60	A-1218-598-A	PANEL BOARD, COMPLETE (EC77: E3)	
60	A-1218-635-A	PANEL BOARD, COMPLETE (EC77: E2)	
60	A-1218-642-A	PANEL BOARD, COMPLETE (EC77: E51, AR)	
60	A-1218-654-A	PANEL BOARD, COMPLETE (EC77: MX)	
60	A-1218-690-A	PANEL BOARD, COMPLETE (EC55: US, CND)	
60	A-1218-723-A	PANEL BOARD, COMPLETE (EC55: AEP, UK)	
60	A-1218-754-A	PANEL BOARD, COMPLETE (EC55: RU)	
60	A-1218-772-A	PANEL BOARD, COMPLETE (EC55: KR, SP)	
60	A-1218-812-A	PANEL BOARD, COMPLETE (EC55: E2)	
60	A-1218-819-A	PANEL BOARD, COMPLETE (EC55: E51, AR)	
60	A-1218-831-A	PANEL BOARD, COMPLETE (EC55: MX)	
60	A-1247-478-A	PANEL BOARD, COMPLETE (EC77: AUS)	
60	A-1247-481-A	PANEL BOARD, COMPLETE (EC55: AUS)	
61	2-890-819-01	BUTTON (TUNING)	
62	2-890-818-01	BUTTON (FUNCTION)	
63	X-2177-496-1	BUTTON (POWER) ASSY	
64	1-832-053-21	CABLE, FLEXIBLE FLAT (9 CORE)	

8-3. CHASSIS SECTION (EC77/GX99)

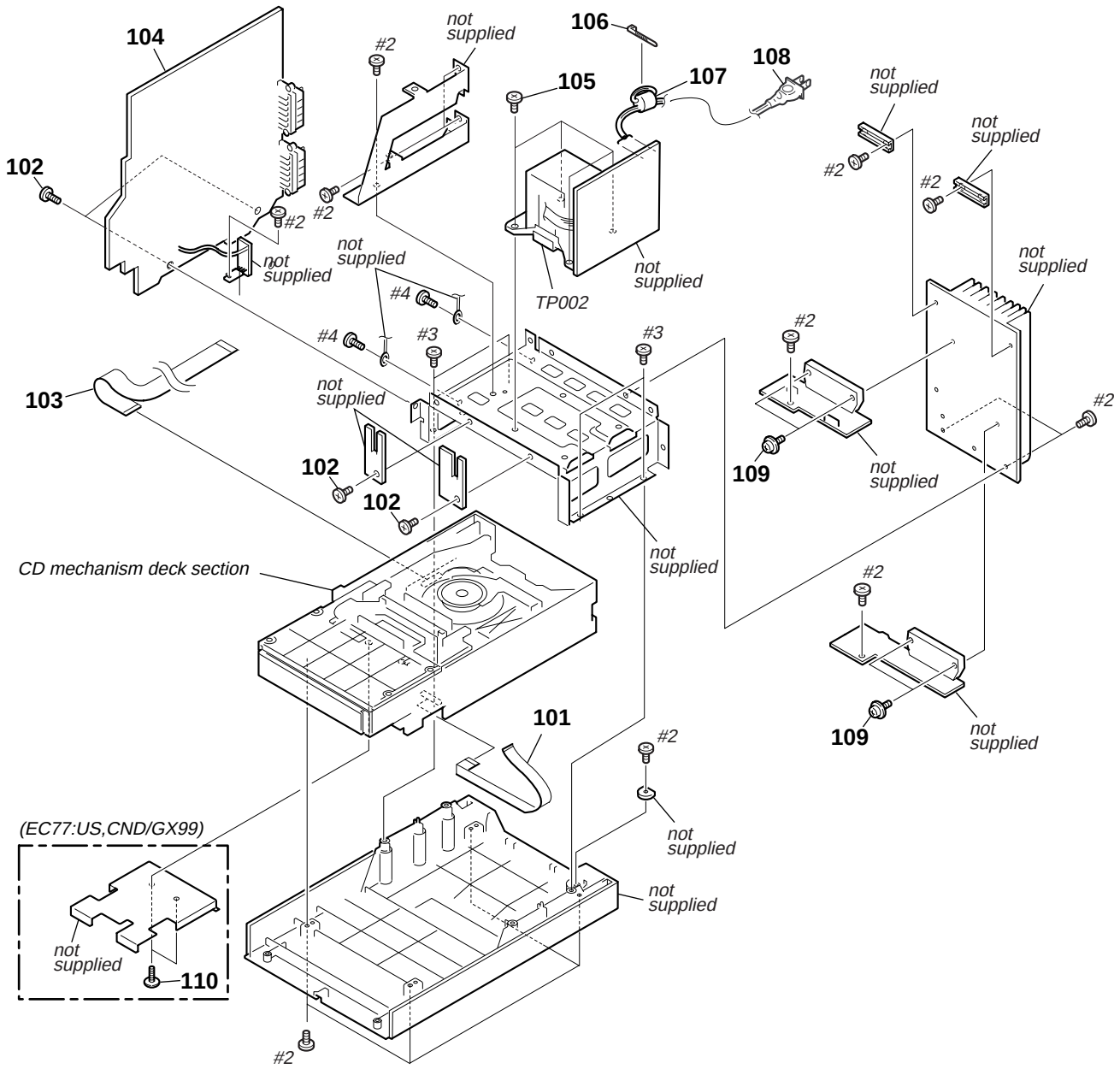

Ref. No.	Part No.	Description	Remark
101	1-832-838-21	CABLE, FLEXIBLE FLAT (13 CORE)	
102	3-254-143-11	SCREW (B3), (+) BV TAPPING	
103	1-834-181-21	CABLE, FLEXIBLE FLAT (21 CORE)	
104	A-1218-507-A	MAIN BOARD, COMPLETE (GX99)	
104	A-1218-539-A	MAIN BOARD, COMPLETE (EC77: US, CND)	
104	A-1218-580-A	MAIN BOARD, COMPLETE (EC77: AEP, RU)	
104	A-1218-600-A	MAIN BOARD, COMPLETE (EC77: E3, AUS)	
104	A-1218-637-A	MAIN BOARD, COMPLETE (EC77: E2, E51, AR)	
104	A-1271-410-A	MAIN BOARD, COMPLETE (EC77: MX)	
105	4-900-386-01	SCREW	
106	3-701-748-00	CLAMP	
107	1-500-868-11	CORE, FERRITE	
⚠108	1-775-790-81	CORD, POWER (AUS)	
⚠108	1-790-757-52	CORD, POWER (US, CND)	
⚠108	1-831-370-11	CORD, POWER (AEP, RU, E2, E3, E51)	

Ref. No.	Part No.	Description	Remark
⚠108	1-832-377-11	CORD, POWER (MX)	
⚠108	1-834-172-11	CORD, POWER (AR)	
109	3-905-609-31	SCREW (TRANSISTOR)	
110	3-229-336-01	SCREW, +BVWH TAPPING (3X8)	
⚠TP002	1-445-113-11	TRANSFORMER, POWER (EC77: US, CND/GX99)	
⚠TP002	1-445-118-11	TRANSFORMER, POWER (EC77: AEP, RU)	
⚠TP002	1-445-119-11	TRANSFORMER, POWER (EC77: E2, E3, E51, AR, AUS)	
⚠TP002	1-445-120-11	TRANSFORMER, POWER (EC77: MX)	
#2	7-685-647-79	SCREW +BVTP 3X10 TYPE2 N-S	
#3	7-685-661-14	SCREW +BVTP 4X12 TYPE2 IT-3	
#4	7-685-645-79	SCREW +BVTP 3X6 TYPE2 IT-3	

8-4. CHASSIS SECTION (EC55)

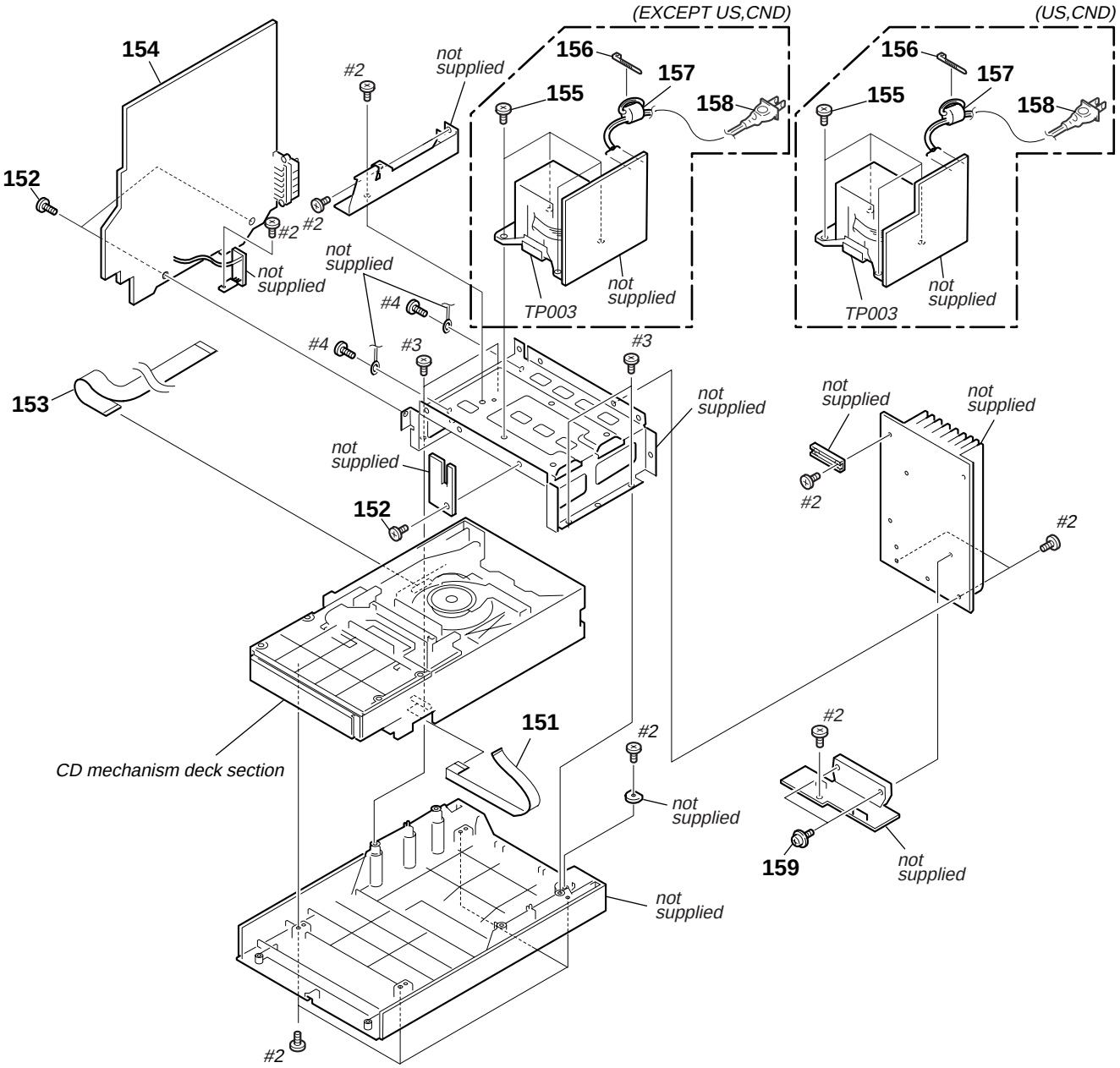

Ref. No.	Part No.	Description	Remark
151	1-832-838-21	CABLE, FLEXIBLE FLAT (13 CORE)	
152	3-254-143-11	SCREW (B3), (+) BV TAPPING	
153	1-834-181-21	CABLE, FLEXIBLE FLAT (21 CORE)	
154	A-1218-693-A	MAIN BOARD, COMPLETE (EC55: US, CND)	
154	A-1218-725-A	MAIN BOARD, COMPLETE (EC55: AEP, UK, RU)	
154	A-1218-774-A	MAIN BOARD, COMPLETE (EC55: SP, AUS)	
154	A-1218-814-A	MAIN BOARD, COMPLETE (EC55: E2, E51, MX, AR)	
154	A-1258-298-A	MAIN BOARD, COMPLETE (EC55: KR)	
155	4-900-386-01	SCREW	
156	3-701-748-00	CLAMP	
157	1-500-868-11	CORE, FERRITE	
⚠158	1-769-079-51	CORD, POWER (KR)	
⚠158	1-775-790-81	CORD, POWER (AUS)	
⚠158	1-790-757-52	CORD, POWER (US, CND)	

Ref. No.	Part No.	Description	Remark
⚠158	1-830-891-11	CORD, POWER (UK)	
⚠158	1-831-370-11	CORD, POWER (AEP, RU, E2, E51, SP)	
⚠158	1-832-377-11	CORD, POWER (MX)	
⚠158	1-834-172-11	CORD, POWER (AR)	
159	3-905-609-31	SCREW (TRANSISTOR)	
⚠TP003	1-443-911-11	TRANSFORMER, POWER (E2, E51, KR, AR, SP, AUS)	
⚠TP003	1-443-995-11	TRANSFORMER, POWER (MX)	
⚠TP003	1-445-115-11	TRANSFORMER, POWER (US, CND)	
⚠TP003	1-445-117-11	TRANSFORMER, POWER (AEP, UK, RU)	
#2	7-685-647-79	SCREW +BVTP 3X10 TYPE2 N-S	
#3	7-685-661-14	SCREW +BVTP 4X12 TYPE2 IT-3	
#4	7-685-645-79	SCREW +BVTP 3X6 TYPE2 IT-3	

8-5. TOP SECTION (EXCEPT US, CND)

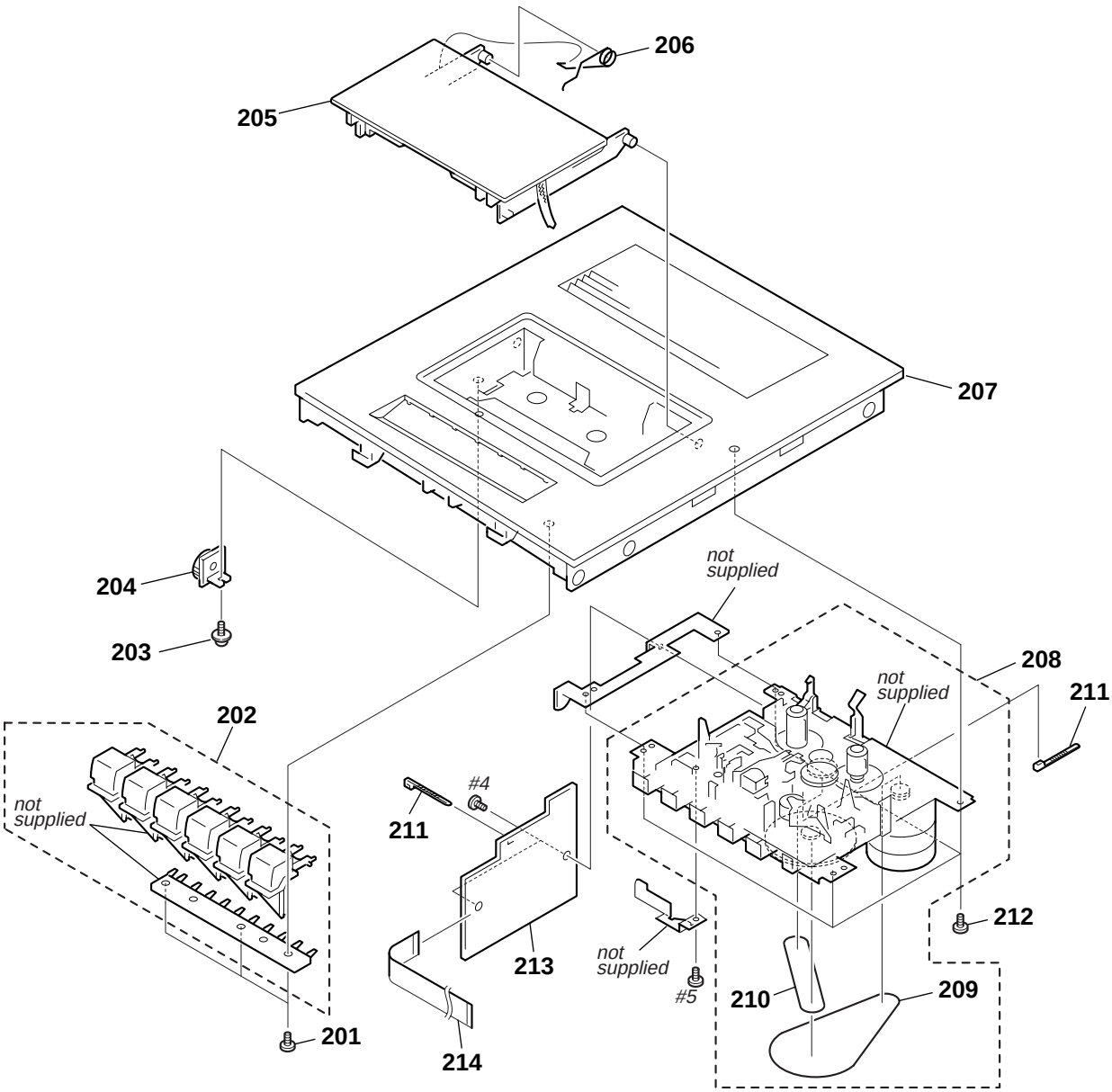

Ref. No.	Part No.	Description	Remark
201	3-252-827-01	SCREW (B2.6), (+) BV TAPPING	
202	2-649-132-21	BUTTON (CASS)	
203	3-921-725-01	SCREW (2.6X10), +PWH	
204	3-047-468-01	DAMPER	
205	2-649-131-21	BOX, CASSETTE	
206	2-649-152-02	SPRING (CASS)	
207	2-649-128-71	PANEL, TOP	
208	1-797-575-11	DECK, MECHANICAL	
209	2-688-622-01	BELT (MAIN)	
210	2-688-621-01	BELT (R/F)	

Ref. No.	Part No.	Description	Remark
211	3-701-748-00	CLAMP	
212	4-951-620-01	SCREW (2.6X8), +BVTP	
213	A-1218-569-A	DECK BOARD, COMPLETE (EC77: AEP, RU, E2, E3, E51, MX, AR, AUS)	
213	A-1218-730-A	DECK BOARD, COMPLETE (EC55: AEP, UK, RU, E2, E51, MX, KR, AR, SP, AUS)	
214	1-833-801-21	CABLE, FLEXIBLE FLAT (9 CORE)	
#4	7-685-645-79	SCREW +BVTP 3X6 TYPE2 IT-3	
#5	7-685-850-04	SCREW +BVTT 2X3 (S)	

8-6. CD MECHANISM DECK SECTION

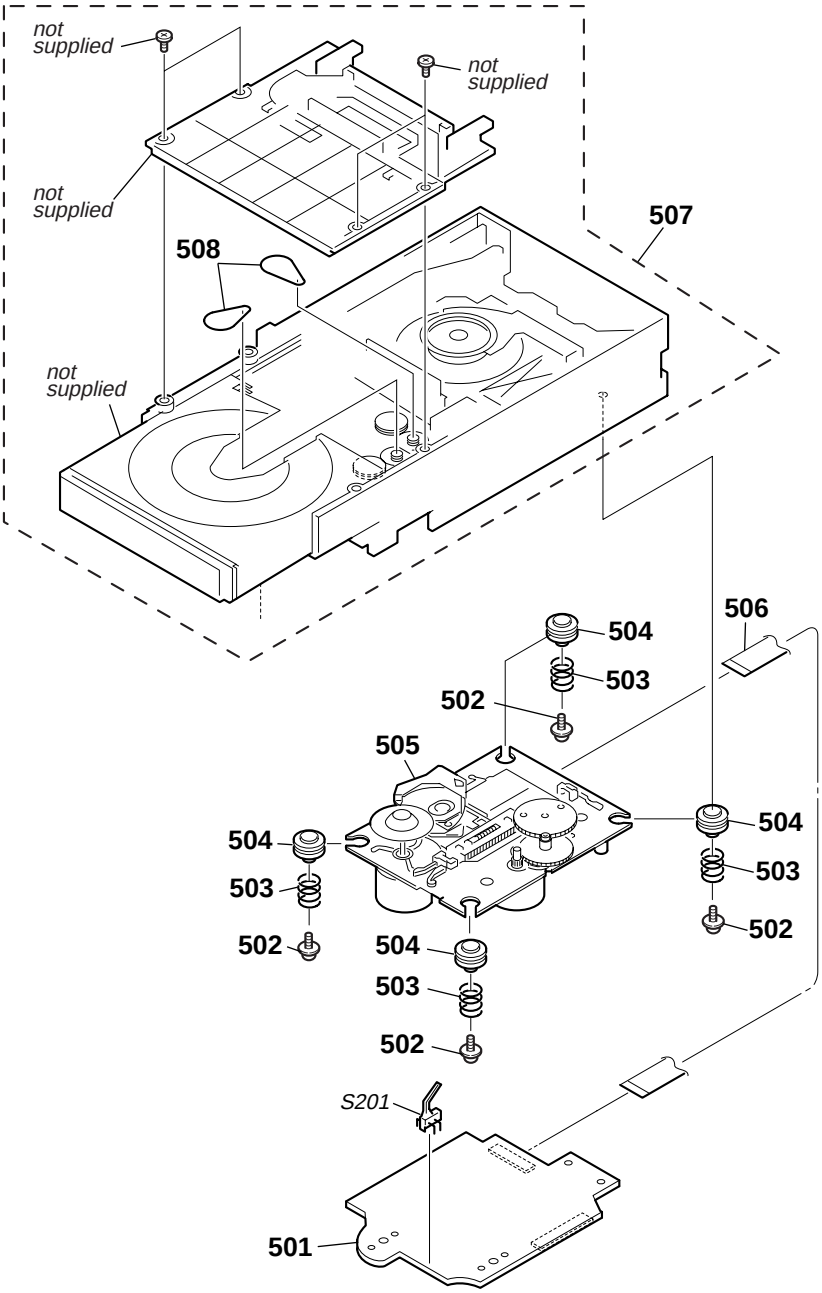

Ref. No.	Part No.	Description	Remark	Ref. No.	Part No.	Description	Remark
501	A-1217-914-A	BD90 BOARD, COMPLETE		506	1-832-404-21	CABLE, FLEXIBLE FLAT (16 CORE)	
502	4-985-672-01	SCREW (+PTPWHM2.6), FLOATING		507	1-797-193-12	MECHANICAL, CD (DLM3A23-11)	
503	4-227-045-31	SPRING (INSULATOR), COIL		508	2-632-062-11	BELT (DLM3A)	
504	4-227-549-31	INSULATOR		S201	1-771-853-11	SWITCH, DETECTION (LIMIT)	
⚠505	A-4735-357-A	BASE ASSY, OP (KSM-213)					

SECTION 9
ELECTRICAL PARTS LIST

BD90

NOTE:

- Due to standardization, replacements in the parts list may be different from the parts specified in the diagrams or the components used on the set.
- -XX and -X mean standardized parts, so they may have some difference from the original one.
- RESISTORS
  All resistors are in ohms.
  METAL: Metal-film resistor.
  METAL OXIDE: Metal oxide-film resistor.
  F: nonflammable
- CAPACITORS
  uF: µF
- COILS
  uH: µH
- Items marked "*" are not stocked since they are seldom required for routine service. Some delay should be anticipated when ordering these items.
- SEMICONDUCTORS
  In each case, u: µ, for example:
  uA. . : µA. . uPA. . : µPA. .
  uPB. . : µPB. . uPC. . : µPC. .
  uPD. . : µPD. .
- Abbreviation
  AR : Argentine model
  AUS : Australian model
  CND : Canadian model
  E2 : 120V AC area in E model
  E3 : 240V AC area in E model
  E51 : Chilean and Peruvian model
  KR : Korean model
  MX : Mexican model
  RU : Russian model
  SP : Singapore model

When indicating parts by reference number, please include the board name.

The components identified by mark ⚠ or dotted line with mark ⚠ are critical for safety. Replace only with part number specified.

Les composants identifiés par une marque ⚠ sont critiques pour la sécurité.
Ne les remplacer que par une pièce portant le numéro spécifié.

Ref. No.	Part No.	Description			Remark
	A-1217-914-A	BD90 BOARD, COMPLETE			
		**********			
		< CAPACITOR >			
C100	1-164-360-11	CERAMIC CHIP	0.1uF		16V
C101	1-164-360-11	CERAMIC CHIP	0.1uF		16V
C102	1-164-360-11	CERAMIC CHIP	0.1uF		16V
C103	1-164-360-11	CERAMIC CHIP	0.1uF		16V
C104	1-164-360-11	CERAMIC CHIP	0.1uF		16V
C105	1-164-360-11	CERAMIC CHIP	0.1uF		16V
C106	1-128-995-21	ELECT CHIP	100uF	20%	10V
C107	1-164-360-11	CERAMIC CHIP	0.1uF		16V
C108	1-164-360-11	CERAMIC CHIP	0.1uF		16V
C109	1-164-360-11	CERAMIC CHIP	0.1uF		16V
C110	1-164-360-11	CERAMIC CHIP	0.1uF		16V
C112	1-164-360-11	CERAMIC CHIP	0.1uF		16V
C113	1-164-360-11	CERAMIC CHIP	0.1uF		16V
C115	1-124-778-00	ELECT CHIP	22uF	20%	6.3V
C116	1-164-360-11	CERAMIC CHIP	0.1uF		16V
C117	1-164-227-11	CERAMIC CHIP	0.022uF	10%	25V
C118	1-162-970-11	CERAMIC CHIP	0.01uF	10%	25V
C119	1-164-227-11	CERAMIC CHIP	0.022uF	10%	25V
C120	1-162-970-11	CERAMIC CHIP	0.01uF	10%	25V
C122	1-164-315-11	CERAMIC CHIP	470PF	5%	50V
C123	1-164-315-11	CERAMIC CHIP	470PF	5%	50V
C124	1-162-968-11	CERAMIC CHIP	0.0047uF	10%	50V
C125	1-162-968-11	CERAMIC CHIP	0.0047uF	10%	50V
C126	1-107-826-11	CERAMIC CHIP	0.1uF	10%	16V
C127	1-162-966-11	CERAMIC CHIP	0.0022uF	10%	50V
C128	1-162-910-11	CERAMIC CHIP	5PF	0.25PF	50V
C130	1-162-910-11	CERAMIC CHIP	5PF	0.25PF	50V
C132	1-164-360-11	CERAMIC CHIP	0.1uF		16V
C133	1-107-826-11	CERAMIC CHIP	0.1uF	10%	16V
C136	1-162-923-11	CERAMIC CHIP	47PF	5%	50V
C137	1-162-970-11	CERAMIC CHIP	0.01uF	10%	25V
C138	1-164-315-11	CERAMIC CHIP	470PF	5%	50V
C139	1-162-970-11	CERAMIC CHIP	0.01uF	10%	25V
C140	1-162-970-11	CERAMIC CHIP	0.01uF	10%	25V
C141	1-162-966-11	CERAMIC CHIP	0.0022uF	10%	50V
C142	1-107-826-11	CERAMIC CHIP	0.1uF	10%	16V
C143	1-162-970-11	CERAMIC CHIP	0.01uF	10%	25V
C144	1-107-826-11	CERAMIC CHIP	0.1uF	10%	16V
C145	1-162-970-11	CERAMIC CHIP	0.01uF	10%	25V
C146	1-164-315-11	CERAMIC CHIP	470PF	5%	50V
C147	1-107-826-11	CERAMIC CHIP	0.1uF	10%	16V
C148	1-162-923-11	CERAMIC CHIP	47PF	5%	50V
C149	1-162-919-11	CERAMIC CHIP	22PF	5%	50V
C150	1-162-964-11	CERAMIC CHIP	0.001uF	10%	50V
C151	1-164-315-11	CERAMIC CHIP	470PF	5%	50V
C152	1-164-315-11	CERAMIC CHIP	470PF	5%	50V
C153	1-164-360-11	CERAMIC CHIP	0.1uF		16V
C201	1-128-995-21	ELECT CHIP	100uF	20%	10V
C202	1-128-995-21	ELECT CHIP	100uF	20%	10V
C204	1-164-360-11	CERAMIC CHIP	0.1uF		16V
C205	1-164-360-11	CERAMIC CHIP	0.1uF		16V
C206	1-165-908-11	CERAMIC CHIP	1uF	10%	10V
C207	1-165-908-11	CERAMIC CHIP	1uF	10%	10V
C301	1-164-360-11	CERAMIC CHIP	0.1uF		16V
C302	1-137-710-91	CERAMIC CHIP	10uF	20%	6.3V
C303	1-137-710-91	CERAMIC CHIP	10uF	20%	6.3V
C306	1-128-995-21	ELECT CHIP	100uF	20%	10V
C307	1-165-908-11	CERAMIC CHIP	1uF	10%	10V
C309	1-162-964-11	CERAMIC CHIP	0.001uF	10%	50V
C401	1-128-394-11	ELECT CHIP	220uF	20%	10V
C403	1-164-360-11	CERAMIC CHIP	0.1uF		16V
C404	1-164-360-11	CERAMIC CHIP	0.1uF		16V
C405	1-164-360-11	CERAMIC CHIP	0.1uF		16V
		< CONNECTOR >			
CN201	1-784-833-51	CONNECTOR, FFC (LIF (NON-ZIF)) 21P			
CN301	1-770-425-51	CONNECTOR, FFC/FPC 16P			
		< IC >			
IC101	(Not supplied)	IC TC94A70FG-006			
IC201	6-710-808-01	IC TK63115SCL-G@GT			
IC401	6-710-637-01	IC BA5826SFP-E2			
		< TRANSISTOR >			
Q301	6-551-120-01	TRANSISTOR	2SA2119K		
		< RESISTOR >			
R101	1-216-813-11	METAL CHIP	220	5%	1/10W
R102	1-216-833-11	METAL CHIP	10K	5%	1/10W
R104	1-216-295-91	SHORT CHIP	0		
R105	1-216-857-11	METAL CHIP	1M	5%	1/10W
R106	1-216-821-11	METAL CHIP	1K	5%	1/10W

BD90 DECK

Ref. No.	Part No.	Description			Remark
R108	1-216-864-11	SHORT CHIP	0		
R110	1-216-833-11	METAL CHIP	10K	5%	1/10W
R111	1-216-809-11	METAL CHIP	100	5%	1/10W
R112	1-216-809-11	METAL CHIP	100	5%	1/10W
R113	1-216-833-11	METAL CHIP	10K	5%	1/10W
R114	1-216-833-11	METAL CHIP	10K	5%	1/10W
R118	1-216-845-11	METAL CHIP	100K	5%	1/10W
R120	1-216-864-11	SHORT CHIP	0		
R125	1-216-864-11	SHORT CHIP	0		
R126	1-216-864-11	SHORT CHIP	0		
R127	1-216-864-11	SHORT CHIP	0		
R128	1-216-853-11	METAL CHIP	470K	5%	1/10W
R129	1-216-821-11	METAL CHIP	1K	5%	1/10W
R130	1-216-829-11	METAL CHIP	4.7K	5%	1/10W
R134	1-216-857-11	METAL CHIP	1M	5%	1/10W
R135	1-216-853-11	METAL CHIP	470K	5%	1/10W
R136	1-216-837-11	METAL CHIP	22K	5%	1/10W
R139	1-216-841-11	METAL CHIP	47K	5%	1/10W
R140	1-216-864-11	SHORT CHIP	0		
R142	1-216-837-11	METAL CHIP	22K	5%	1/10W
R143	1-216-841-11	METAL CHIP	47K	5%	1/10W
R144	1-216-837-11	METAL CHIP	22K	5%	1/10W
R145	1-216-864-11	SHORT CHIP	0		
R146	1-216-864-11	SHORT CHIP	0		
R147	1-216-864-11	SHORT CHIP	0		
R148	1-216-864-11	SHORT CHIP	0		
R149	1-216-864-11	SHORT CHIP	0		
R150	1-216-864-11	SHORT CHIP	0		
R151	1-216-864-11	SHORT CHIP	0		
R153	1-216-857-11	METAL CHIP	1M	5%	1/10W
R154	1-216-857-11	METAL CHIP	1M	5%	1/10W
R155	1-216-805-11	METAL CHIP	47	5%	1/10W
R156	1-216-809-11	METAL CHIP	100	5%	1/10W
R157	1-216-809-11	METAL CHIP	100	5%	1/10W
R201	1-216-295-91	SHORT CHIP	0		
R202	1-216-295-91	SHORT CHIP	0		
R203	1-216-809-11	METAL CHIP	100	5%	1/10W
R204	1-216-809-11	METAL CHIP	100	5%	1/10W
R205	1-216-809-11	METAL CHIP	100	5%	1/10W
R206	1-216-809-11	METAL CHIP	100	5%	1/10W
R207	1-216-809-11	METAL CHIP	100	5%	1/10W
R208	1-216-809-11	METAL CHIP	100	5%	1/10W
R209	1-216-809-11	METAL CHIP	100	5%	1/10W
R210	1-216-809-11	METAL CHIP	100	5%	1/10W
R211	1-216-809-11	METAL CHIP	100	5%	1/10W
R212	1-216-809-11	METAL CHIP	100	5%	1/10W
R218	1-216-845-11	METAL CHIP	100K	5%	1/10W
R219	1-216-845-11	METAL CHIP	100K	5%	1/10W
R220	1-216-845-11	METAL CHIP	100K	5%	1/10W
R221	1-216-845-11	METAL CHIP	100K	5%	1/10W
R222	1-216-845-11	METAL CHIP	100K	5%	1/10W
R223	1-216-845-11	METAL CHIP	100K	5%	1/10W
R301	1-216-845-11	METAL CHIP	100K	5%	1/10W
R302	1-216-864-11	SHORT CHIP	0		
R303	1-216-789-11	METAL CHIP	2.2	5%	1/10W
R304	1-216-789-11	METAL CHIP	2.2	5%	1/10W
R402	1-216-825-11	METAL CHIP	2.2K	5%	1/10W
R405	1-216-833-11	METAL CHIP	10K	5%	1/10W
R408	1-216-825-11	METAL CHIP	2.2K	5%	1/10W
R414	1-216-829-11	METAL CHIP	4.7K	5%	1/10W
R415	1-216-841-11	METAL CHIP	47K	5%	1/10W
		< VIBRATOR >			
X102	1-795-101-21	VIBRATOR, CERAMIC (16.934MHz)			
**********					
	A-1218-569-A	DECK BOARD, COMPLETE (EC77: AEP, RU, E2, E3, E51, MX)			
	A-1218-730-A	DECK BOARD, COMPLETE (EC55: AEP, UK, RU, E2, E51, MX)			
		**********			
		< CAPACITOR >			
C501	1-126-933-11	ELECT	100uF	20%	16V
C502	1-126-933-11	ELECT	100uF	20%	16V
C503	1-162-966-11	CERAMIC CHIP	0.0022uF	10%	50V
C504	1-162-966-11	CERAMIC CHIP	0.0022uF	10%	50V
C505	1-162-970-11	CERAMIC CHIP	0.01uF	10%	25V
C506	1-162-970-11	CERAMIC CHIP	0.01uF	10%	25V
C509	1-162-923-11	CERAMIC CHIP	47PF	5%	50V
C510	1-162-923-11	CERAMIC CHIP	47PF	5%	50V
C511	1-162-960-11	CERAMIC CHIP	220PF	10%	50V
C512	1-162-960-11	CERAMIC CHIP	220PF	10%	50V
C513	1-126-960-11	ELECT	1uF	20%	50V
C514	1-126-960-11	ELECT	1uF	20%	50V
C515	1-126-947-11	ELECT	47uF	20%	35V
C516	1-126-947-11	ELECT	47uF	20%	35V
C517	1-162-964-11	CERAMIC CHIP	0.001uF	10%	50V
C519	1-162-962-11	CERAMIC CHIP	470PF	10%	50V
C520	1-162-962-11	CERAMIC CHIP	470PF	10%	50V
C521	1-125-837-91	CERAMIC CHIP	1uF	10%	6.3V
C522	1-125-837-91	CERAMIC CHIP	1uF	10%	6.3V
C523	1-125-837-91	CERAMIC CHIP	1uF	10%	6.3V
C524	1-125-837-91	CERAMIC CHIP	1uF	10%	6.3V
C525	1-162-923-11	CERAMIC CHIP	47PF	5%	50V
C526	1-162-923-11	CERAMIC CHIP	47PF	5%	50V
= C527	1-162-962-11	CERAMIC CHIP	470PF	10%	50V
C528	1-162-962-11	CERAMIC CHIP	470PF	10%	50V
C529	1-162-961-11	CERAMIC CHIP	330PF	10%	50V
C530	1-162-961-11	CERAMIC CHIP	330PF	10%	50V
C531	1-162-970-11	CERAMIC CHIP	0.01uF	10%	25V
C532	1-162-970-11	CERAMIC CHIP	0.01uF	10%	25V
C533	1-162-966-11	CERAMIC CHIP	0.0022uF	10%	50V
C534	1-162-966-11	CERAMIC CHIP	0.0022uF	10%	50V
C535	1-162-966-11	CERAMIC CHIP	0.0022uF	10%	50V
C536	1-162-966-11	CERAMIC CHIP	0.0022uF	10%	50V
C537	1-162-966-11	CERAMIC CHIP	0.0022uF	10%	50V
C538	1-162-970-11	CERAMIC CHIP	0.01uF	10%	25V
C539	1-115-156-11	CERAMIC CHIP	1uF		10V
C540	1-137-391-11	MYLAR	0.0047uF	5%	100V
C541	1-100-566-91	CERAMIC CHIP	0.1uF	10%	25V
C542	1-104-662-91	ELECT	22uF	20%	25V
C543	1-162-964-11	CERAMIC CHIP	0.001uF	10%	50V
C545	1-100-566-91	CERAMIC CHIP	0.1uF	10%	25V
C546	1-100-566-91	CERAMIC CHIP	0.1uF	10%	25V

Ref. No.	Part No.	Description			Remark
		< CONNECTOR >			
CN501	1-815-449-11	PIN, CONNECTOR (PWB) 8P			
		< TERMINAL >			
ET501	1-537-771-21	TERMINAL BOARD, GROUND			
		< IC >			
IC501	8-759-100-96	IC uPC4558G2			
IC502	8-759-100-96	IC uPC4558G2			
		< JUMPER RESISTOR >			
JR501	1-216-864-11	SHORT CHIP	0		
JR502	1-216-864-11	SHORT CHIP	0		
JR503	1-216-864-11	SHORT CHIP	0		
JR504	1-216-295-91	SHORT CHIP	0		
		< COIL >			
L501	1-456-094-11	TRANSFORMER, BIAS OSCILLATION			
		< TRANSISTOR >			
Q501	8-729-119-78	TRANSISTOR	2SC2785-HFE		
Q502	8-729-119-78	TRANSISTOR	2SC2785-HFE		
		< RESISTOR >			
R501	1-216-825-11	METAL CHIP	2.2K	5%	1/10W
R502	1-216-825-11	METAL CHIP	2.2K	5%	1/10W
R503	1-216-825-11	METAL CHIP	2.2K	5%	1/10W
R504	1-216-825-11	METAL CHIP	2.2K	5%	1/10W
R505	1-216-835-11	METAL CHIP	15K	5%	1/10W
R506	1-216-835-11	METAL CHIP	15K	5%	1/10W
R507	1-216-851-11	METAL CHIP	330K	5%	1/10W
R508	1-216-851-11	METAL CHIP	330K	5%	1/10W
R509	1-216-811-11	METAL CHIP	150	5%	1/10W
R510	1-216-811-11	METAL CHIP	150	5%	1/10W
R511	1-216-845-11	METAL CHIP	100K	5%	1/10W
R512	1-216-845-11	METAL CHIP	100K	5%	1/10W
R513	1-216-845-11	METAL CHIP	100K	5%	1/10W
R514	1-216-845-11	METAL CHIP	100K	5%	1/10W
R515	1-216-864-11	SHORT CHIP	0		
R516	1-216-864-11	SHORT CHIP	0		
R517	1-216-821-11	METAL CHIP	1K	5%	1/10W
R518	1-216-821-11	METAL CHIP	1K	5%	1/10W
R519	1-216-841-11	METAL CHIP	47K	5%	1/10W
R520	1-216-841-11	METAL CHIP	47K	5%	1/10W
R521	1-216-841-11	METAL CHIP	47K	5%	1/10W
R522	1-216-841-11	METAL CHIP	47K	5%	1/10W
R523	1-216-827-11	METAL CHIP	3.3K	5%	1/10W
R524	1-216-827-11	METAL CHIP	3.3K	5%	1/10W
R525	1-216-851-11	METAL CHIP	330K	5%	1/10W
R526	1-216-851-11	METAL CHIP	330K	5%	1/10W
R527	1-216-851-11	METAL CHIP	330K	5%	1/10W
R528	1-216-851-11	METAL CHIP	330K	5%	1/10W
R529	1-216-825-11	METAL CHIP	2.2K	5%	1/10W
R530	1-216-825-11	METAL CHIP	2.2K	5%	1/10W
R531	1-216-832-11	METAL CHIP	8.2K	5%	1/10W
R532	1-216-832-11	METAL CHIP	8.2K	5%	1/10W
R533	1-216-837-11	METAL CHIP	22K	5%	1/10W
R534	1-216-835-11	METAL CHIP	15K	5%	1/10W
R535	1-216-829-11	METAL CHIP	4.7K	5%	1/10W
R536	1-216-829-11	METAL CHIP	4.7K	5%	1/10W
R537	1-216-833-11	METAL CHIP	10K	5%	1/10W
R538	1-216-833-11	METAL CHIP	10K	5%	1/10W
R539	1-216-793-11	METAL CHIP	4.7	5%	1/10W
R540	1-216-805-11	METAL CHIP	47	5%	1/10W
R541	1-216-805-11	METAL CHIP	47	5%	1/10W
R543	1-216-809-11	METAL CHIP	100	5%	1/10W
R544	1-216-809-11	METAL CHIP	100	5%	1/10W
R545	1-216-817-11	METAL CHIP	470	5%	1/10W
R546	1-216-817-11	METAL CHIP	470	5%	1/10W
		< SWITCH >			
S501	1-762-369-11	SWITCH, SLIDE (REC/PB SW)			

****

HI-AMP BOARD
****

Ref. No.	Part No.	Description			Remark
		< CAPACITOR >			
C101	1-126-960-11	ELECT	1uF	20%	50V
C102	1-126-960-11	ELECT	1uF	20%	50V
C103	1-164-315-11	CERAMIC CHIP	470PF	5%	50V
C104	1-164-315-11	CERAMIC CHIP	470PF	5%	50V
C105	1-162-927-11	CERAMIC CHIP	100PF	5%	50V
C106	1-162-927-11	CERAMIC CHIP	100PF	5%	50V
C107	1-126-947-11	ELECT	47uF	20%	35V
C108	1-126-947-11	ELECT	47uF	20%	35V
C109	1-162-908-11	CERAMIC CHIP	3PF	0.25PF	50V
C110	1-162-908-11	CERAMIC CHIP	3PF	0.25PF	50V
C111	1-126-968-11	ELECT	100uF	20%	50V (EC55/EC77: EXCEPT US,CND)
C111	1-128-576-11	ELECT	100uF	20%	63V (EC77: US, CND/GX99)
C113	1-126-968-11	ELECT	100uF	20%	50V (EC55/EC77: EXCEPT US,CND)
C113	1-128-576-11	ELECT	100uF	20%	63V (EC77: US, CND/GX99)
C115	1-162-970-11	CERAMIC CHIP	0.01uF	10%	25V
C116	1-162-968-11	CERAMIC CHIP	0.0047uF	10%	50V (EC77/GX99)
C116	1-162-970-11	CERAMIC CHIP	0.01uF	10%	25V (EC55)
C118	1-162-968-11	CERAMIC CHIP	0.0047uF	10%	50V (EC55)
C119	1-162-970-11	CERAMIC CHIP	0.01uF	10%	25V (EC77/GX99)
C119	1-216-864-11	SHORT CHIP	0 (EC55)		
C120	1-162-970-11	CERAMIC CHIP	0.01uF	10%	25V (EC77/GX99)
C120	1-216-864-11	SHORT CHIP	0 (EC55)		
C151	1-162-968-11	CERAMIC CHIP	0.0047uF	10%	50V
C152	1-162-968-11	CERAMIC CHIP	0.0047uF	10%	50V
C153	1-100-566-91	CERAMIC CHIP	0.1uF	10%	25V
		< CONNECTOR >			
* CN101	1-569-505-11	PIN, CONNECTOR 10P			

Ref. No.	Part No.	Description	Remark
		< DIODE >	
D121	6-501-730-01	DIODE MAZ8051GMLS0 (EC55)	
D151	6-500-335-01	DIODE MC2838-T112-1	
D152	8-719-404-50	DIODE MA111-TX	
		< IC >	
IC101	6-705-620-01	IC STK433-060 (EC55)	
IC101	6-705-621-01	IC STK433-070 (EC77: EXCEPT US,CND)	
IC102	6-600-580-01	IC STK433-090-E (EC77: US, CND/GX99)	
		< TRANSISTOR >	
Q101	8-729-600-22	TRANSISTOR 2SA1235-F (EC55)	
Q102	8-729-120-28	TRANSISTOR 2SC1623-L5L6	
Q151	6-551-270-01	TRANSISTOR 2SA2026	
Q152	6-551-270-01	TRANSISTOR 2SA2026	
		< RESISTOR >	
R101	1-216-813-11	METAL CHIP 220 5% 1/10W	(EC77: US, CND/GX99)
R101	1-216-824-11	METAL CHIP 1.8K 5% 1/10W	(EC77: E2, E3, E51, MX)
R101	1-216-825-11	METAL CHIP 2.2K 5% 1/10W	(EC55/EC77: AEP, RU)
R102	1-216-813-11	METAL CHIP 220 5% 1/10W	(EC77: US, CND/GX99)
R102	1-216-824-11	METAL CHIP 1.8K 5% 1/10W	(EC77: E2, E3, E51, MX)
R102	1-216-825-11	METAL CHIP 2.2K 5% 1/10W	(EC55/EC77: AEP, RU)
R103	1-216-830-11	METAL CHIP 5.6K 5% 1/10W	(EC55)
R103	1-216-834-11	METAL CHIP 12K 5% 1/10W	(EC77: AEP, RU)
R103	1-216-835-11	METAL CHIP 15K 5% 1/10W	(EC77: EXCEPT AEP,RU/GX99)
R104	1-216-830-11	METAL CHIP 5.6K 5% 1/10W	(EC55)
R104	1-216-834-11	METAL CHIP 12K 5% 1/10W	(EC77: AEP, RU)
R104	1-216-835-11	METAL CHIP 15K 5% 1/10W	(EC77: EXCEPT AEP,RU/GX99)
R105	1-216-841-11	METAL CHIP 47K 5% 1/10W	
R106	1-216-841-11	METAL CHIP 47K 5% 1/10W	
R107	1-216-821-11	METAL CHIP 1K 5% 1/10W	
R108	1-216-821-11	METAL CHIP 1K 5% 1/10W	
R109	1-216-809-11	METAL CHIP 100 5% 1/10W	(EC55)
R109	1-216-864-11	SHORT CHIP 0 (EC77/GX99)	
R110	1-216-809-11	METAL CHIP 100 5% 1/10W	(EC55)
R110	1-216-864-11	SHORT CHIP 0 (EC77/GX99)	
R111	1-216-841-11	METAL CHIP 47K 5% 1/10W	
R112	1-216-841-11	METAL CHIP 47K 5% 1/10W	
R119	1-216-813-11	METAL CHIP 220 5% 1/10W	
R120	1-216-813-11	METAL CHIP 220 5% 1/10W	
R121	1-216-813-11	METAL CHIP 220 5% 1/10W	
R122	1-216-813-11	METAL CHIP 220 5% 1/10W	
R123	1-216-841-11	METAL CHIP 47K 5% 1/10W	(EC55)
R124	1-216-841-11	METAL CHIP 47K 5% 1/10W	(EC55)
R125	1-216-845-11	METAL CHIP 100K 5% 1/10W	(EC55)
R126	1-216-829-11	METAL CHIP 4.7K 5% 1/10W	(EC55)
R127	1-216-833-11	METAL CHIP 10K 5% 1/10W	(EC55)
R128	1-216-833-11	METAL CHIP 10K 5% 1/10W	
R129	1-216-821-11	METAL CHIP 1K 5% 1/10W	
R130	1-247-807-31	CARBON 100 5% 1/4W	(EC55: AEP, UK/EC77: AEP, RU)
⚠R151	1-216-361-31	METAL OXIDE 0.22 5% 2W F	
⚠R152	1-216-361-31	METAL OXIDE 0.22 5% 2W F	
R155	1-216-813-11	METAL CHIP 220 5% 1/10W	
R156	1-216-813-11	METAL CHIP 220 5% 1/10W	
R159	1-216-833-11	METAL CHIP 10K 5% 1/10W	
R160	1-216-833-11	METAL CHIP 10K 5% 1/10W	
R161	1-216-833-11	METAL CHIP 10K 5% 1/10W	
R162	1-216-833-11	METAL CHIP 10K 5% 1/10W	
R165	1-216-833-11	METAL CHIP 10K 5% 1/10W	
R166	1-216-833-11	METAL CHIP 10K 5% 1/10W	
R167	1-216-825-11	METAL CHIP 2.2K 5% 1/10W	
R168	1-216-825-11	METAL CHIP 2.2K 5% 1/10W	

****

JACK BOARD
****

		< CAPACITOR >	
C401	1-164-156-11	CERAMIC CHIP 0.1uF 25V	
C402	1-164-156-11	CERAMIC CHIP 0.1uF 25V	
C403	1-216-837-11	METAL CHIP 22K 5% 1/10W	
C404	1-216-837-11	METAL CHIP 22K 5% 1/10W	
C405	1-162-964-11	CERAMIC CHIP 0.001uF 10% 50V	
C406	1-162-964-11	CERAMIC CHIP 0.001uF 10% 50V	
		< JACK >	
J401	1-566-822-51	JACK (AUDIO IN)	
J402	1-815-629-21	JACK (PHONES)	

****

KEY-CD BOARD
****

		< RESISTOR >	
R407	1-216-825-11	METAL CHIP 2.2K 5% 1/10W	
R408	1-216-829-11	METAL CHIP 4.7K 5% 1/10W	
R409	1-216-833-11	METAL CHIP 10K 5% 1/10W	
R410	1-216-837-11	METAL CHIP 22K 5% 1/10W	
R411	1-216-841-11	METAL CHIP 47K 5% 1/10W	
		< SWITCH >	
SW306	1-762-875-21	SWITCH, KEYBOARD (DISC 1)	
SW307	1-762-875-21	SWITCH, KEYBOARD (DISC 2)	
SW308	1-762-875-21	SWITCH, KEYBOARD (DISC 3)	
SW309	1-762-875-21	SWITCH, KEYBOARD (⏏)	
SW310	1-762-875-21	SWITCH, KEYBOARD (DISC SKIP/EX-CHANGE)	

****

Ref. No.	Part No.	Description			Remark
		KEY-LEFT BOARD			
		**********			
		< CONNECTOR >			
CN401	1-815-552-11	PIN, CONNECTOR (PWB) 4P			
		< LED >			
LED302	6-501-483-01	DIODE SLR-325VCT31P (STANDBY)			
		< RESISTOR >			
R404	1-216-821-11	METAL CHIP	1K	5%	1/10W
		< SWITCH >			
SW301	1-762-875-21	SWITCH, KEYBOARD (I/⏻)			
SW302	1-762-875-21	SWITCH, KEYBOARD (DISPLAY)			
		KEY-RIGHT BOARD			
		**********			
		< CONNECTOR >			
CN403	1-815-550-11	PIN, CONNECTOR (PWB) 2P			
		< RESISTOR >			
R414	1-216-825-11	METAL CHIP	2.2K	5%	1/10W
R415	1-216-829-11	METAL CHIP	4.7K	5%	1/10W
R416	1-216-833-11	METAL CHIP	10K	5%	1/10W
R417	1-216-837-11	METAL CHIP	22K	5%	1/10W
R418	1-216-841-11	METAL CHIP	47K	5%	1/10W
		< SWITCH >			
SW314	1-762-875-21	SWITCH, KEYBOARD (PLAY MODE/TUNING MODE)			
SW315	1-762-875-21	SWITCH, KEYBOARD (🗀+)			
SW316	1-762-875-21	SWITCH, KEYBOARD (🗀–)			
SW317	1-762-875-21	SWITCH, KEYBOARD (DSGX)			
SW318	1-762-875-21	SWITCH, KEYBOARD (EQ)			
		LOW-AMP BOARD (EC77/GX99)			
		**********			
		< CAPACITOR >			
C101	1-126-960-11	ELECT	1uF	20%	50V
C102	1-126-960-11	ELECT	1uF	20%	50V
C103	1-164-315-11	CERAMIC CHIP	470PF	5%	50V
C104	1-164-315-11	CERAMIC CHIP	470PF	5%	50V
C105	1-162-927-11	CERAMIC CHIP	100PF	5%	50V
C106	1-162-927-11	CERAMIC CHIP	100PF	5%	50V
C107	1-126-947-11	ELECT	47uF	20%	35V
C108	1-126-947-11	ELECT	47uF	20%	35V
C109	1-162-908-11	CERAMIC CHIP	3PF	0.25PF	50V
C110	1-162-908-11	CERAMIC CHIP	3PF	0.25PF	50V
C111	1-126-968-11	ELECT	100uF	20%	50V (EC77: AEP, RU, E2, E3, E51, MX)
C111	1-128-576-11	ELECT	100uF	20%	63V (EC77: US, CND/GX99)
C113	1-126-968-11	ELECT	100uF	20%	50V (EC77: AEP, RU, E2, E3, E51, MX)
C113	1-128-576-11	ELECT	100uF	20%	63V (EC77: US, CND/GX99)
C115	1-162-970-11	CERAMIC CHIP	0.01uF	10%	25V
C116	1-162-968-11	CERAMIC CHIP	0.0047uF	10%	50V
C118	1-162-968-11	CERAMIC CHIP	0.0047uF	10%	50V
C119	1-216-864-11	SHORT CHIP	0		
C120	1-216-864-11	SHORT CHIP	0		
C151	1-162-968-11	CERAMIC CHIP	0.0047uF	10%	50V
C152	1-162-968-11	CERAMIC CHIP	0.0047uF	10%	50V
C153	1-100-566-91	CERAMIC CHIP	0.1uF	10%	25V
		< CONNECTOR >			
* CN101	1-569-505-11	PIN, CONNECTOR 10P			
		< DIODE >			
D121	6-501-730-01	DIODE MAZ8051GMLS0			
D151	6-500-335-01	DIODE MC2838-T112-1			
D152	8-719-404-50	DIODE MA111-TX			
		< IC >			
IC101	6-705-621-01	IC STK433-070 (EC77: EXCEPT US, CND)			
IC102	6-600-580-01	IC STK433-090-E (EC77: US, CND/GX99)			
		< TRANSISTOR >			
Q101	8-729-600-22	TRANSISTOR	2SA1235-F		
Q102	8-729-120-28	TRANSISTOR	2SC1623-L5L6		
Q151	6-551-270-01	TRANSISTOR	2SA2026		
Q152	6-551-270-01	TRANSISTOR	2SA2026		
		< RESISTOR >			
R101	1-216-823-11	METAL CHIP	1.5K	5%	1/10W (EC77: US, CND/GX99)
R101	1-216-824-11	METAL CHIP	1.8K	5%	1/10W (EC77: E2, E3, E51, MX)
R101	1-216-825-11	METAL CHIP	2.2K	5%	1/10W (EC77: AEP, RU)
R102	1-216-823-11	METAL CHIP	1.5K	5%	1/10W (EC77: US, CND/GX99)
R102	1-216-824-11	METAL CHIP	1.8K	5%	1/10W (EC77: E2, E3, E51, MX)
R102	1-216-825-11	METAL CHIP	2.2K	5%	1/10W (EC77: AEP, RU)
R103	1-216-834-11	METAL CHIP	12K	5%	1/10W (EC77: AEP, RU)
R103	1-216-835-11	METAL CHIP	15K	5%	1/10W (EC77: E2, E3, E51, MX)
R104	1-216-834-11	METAL CHIP	12K	5%	1/10W (EC77: AEP, RU)
R104	1-216-835-11	METAL CHIP	15K	5%	1/10W (EC77: E2, E3, E51, MX)
R105	1-216-841-11	METAL CHIP	47K	5%	1/10W
R106	1-216-841-11	METAL CHIP	47K	5%	1/10W
R107	1-216-821-11	METAL CHIP	1K	5%	1/10W
R108	1-216-821-11	METAL CHIP	1K	5%	1/10W
R109	1-216-864-11	SHORT CHIP	0		
R110	1-216-864-11	SHORT CHIP	0		

Ref. No.	Part No.	Description			Remark
R111	1-216-841-11	METAL CHIP	47K	5%	1/10W
R112	1-216-841-11	METAL CHIP	47K	5%	1/10W
R119	1-216-813-11	METAL CHIP	220	5%	1/10W
R120	1-216-813-11	METAL CHIP	220	5%	1/10W
R121	1-216-813-11	METAL CHIP	220	5%	1/10W
R122	1-216-813-11	METAL CHIP	220	5%	1/10W
R123	1-216-841-11	METAL CHIP	47K	5%	1/10W
R124	1-216-841-11	METAL CHIP	47K	5%	1/10W
R125	1-216-845-11	METAL CHIP	100K	5%	1/10W
R126	1-216-829-11	METAL CHIP	4.7K	5%	1/10W
R127	1-216-833-11	METAL CHIP	10K	5%	1/10W
R128	1-216-833-11	METAL CHIP	10K	5%	1/10W
R129	1-216-821-11	METAL CHIP	1K	5%	1/10W
R130	1-247-807-31	CARBON	100	5%	1/4W (EC77: AEP, RU)
⚠R151	1-216-361-31	METAL OXIDE	0.22	5%	2W F
⚠R152	1-216-361-31	METAL OXIDE	0.22	5%	2W F
R155	1-216-813-11	METAL CHIP	220	5%	1/10W
R156	1-216-813-11	METAL CHIP	220	5%	1/10W
R159	1-216-833-11	METAL CHIP	10K	5%	1/10W
R160	1-216-833-11	METAL CHIP	10K	5%	1/10W
R161	1-216-833-11	METAL CHIP	10K	5%	1/10W
R162	1-216-833-11	METAL CHIP	10K	5%	1/10W
R165	1-216-833-11	METAL CHIP	10K	5%	1/10W
R166	1-216-833-11	METAL CHIP	10K	5%	1/10W
R167	1-216-825-11	METAL CHIP	2.2K	5%	1/10W
R168	1-216-825-11	METAL CHIP	2.2K	5%	1/10W

****

	A-1218-507-A	MAIN BOARD, COMPLETE (GX99)
	A-1218-539-A	MAIN BOARD, COMPLETE (EC77: US, CND)
	A-1218-580-A	MAIN BOARD, COMPLETE (EC77: AEP, RU)
	A-1218-600-A	MAIN BOARD, COMPLETE (EC77: E3)
	A-1218-637-A	MAIN BOARD, COMPLETE (EC77: E2, E51, MX)
	A-1218-693-A	MAIN BOARD, COMPLETE (EC55: US)
	A-1218-725-A	MAIN BOARD, COMPLETE (EC55: AEP, UK, RU)
	A-1218-814-A	MAIN BOARD, COMPLETE (EC55: E2, E51, MX)

****

< CAPACITOR >

Ref. No.	Part No.	Description			Remark
C601	1-126-947-11	ELECT	47uF	20%	35V
C602	1-126-965-91	ELECT	22uF	20%	50V
C603	1-162-974-11	CERAMIC CHIP	0.01uF		50V (EC77/GX99)
C604	1-100-566-91	CERAMIC CHIP	0.1uF	10%	25V (EC77/GX99)
C605	1-100-566-91	CERAMIC CHIP	0.1uF	10%	25V (EC77/GX99)
C606	1-162-974-11	CERAMIC CHIP	0.01uF		50V (EC77/GX99)
C607	1-100-566-91	CERAMIC CHIP	0.1uF	10%	25V
C608	1-100-566-91	CERAMIC CHIP	0.1uF	10%	25V
C609	1-162-974-11	CERAMIC CHIP	0.01uF		50V
C610	1-162-974-11	CERAMIC CHIP	0.01uF		50V
C611	1-127-715-91	CERAMIC CHIP	0.22uF	10%	16V
C612	1-127-715-91	CERAMIC CHIP	0.22uF	10%	16V
C613	1-126-964-11	ELECT	10uF	20%	50V
C614	1-126-963-11	ELECT	4.7uF	20%	50V
C615	1-100-566-91	CERAMIC CHIP	0.1uF	10%	25V (EC77/GX99)
C616	1-100-566-91	CERAMIC CHIP	0.1uF	10%	25V (EC77/GX99)
C617	1-100-566-91	CERAMIC CHIP	0.1uF	10%	25V
C618	1-100-566-91	CERAMIC CHIP	0.1uF	10%	25V
C620	1-104-658-91	ELECT	100uF	20%	10V
C621	1-137-749-11	MYLAR	0.1uF		100V
C622	1-114-471-51	ELECT	3300uF	20%	63V (EC77: US, CND, AEP, RU/GX99)
C622	1-128-550-11	ELECT	2200uF	20%	50V (EC55)
C623	1-137-749-11	MYLAR	0.1uF		100V
C626	1-114-471-51	ELECT	3300uF	20%	63V (EC77: US, CND, AEP, RU/GX99)
C626	1-128-550-11	ELECT	2200uF	20%	50V (EC55)
C627	1-126-943-11	ELECT	2200uF	20%	25V
C628	1-126-942-61	ELECT	1000uF	20%	25V
C630	1-126-947-11	ELECT	47uF	20%	35V
C631	1-126-933-11	ELECT	100uF	20%	16V
C632	1-126-963-11	ELECT	4.7uF	20%	50V
C633	1-110-563-11	CERAMIC CHIP	0.068uF	10%	16V
C634	1-110-563-11	CERAMIC CHIP	0.068uF	10%	16V
C635	1-125-837-91	CERAMIC CHIP	1uF	10%	6.3V (EXCEPT US, CND)
C636	1-126-960-11	ELECT	1uF	20%	50V
C637	1-110-563-11	CERAMIC CHIP	0.068uF	10%	16V
C638	1-110-563-11	CERAMIC CHIP	0.068uF	10%	16V
C639	1-162-968-11	CERAMIC CHIP	0.0047uF	10%	50V
C640	1-162-968-11	CERAMIC CHIP	0.0047uF	10%	50V
C641	1-126-961-11	ELECT	2.2uF	20%	50V (EXCEPT AEP, UK, RU)
C641	1-126-962-11	ELECT	3.3uF	20%	50V (AEP, UK, RU)
C642	1-164-227-11	CERAMIC CHIP	0.022uF	10%	25V
C643	1-125-837-91	CERAMIC CHIP	1uF	10%	6.3V (EXCEPT US, CND)
C644	1-126-960-11	ELECT	1uF	20%	50V
C645	1-162-960-11	CERAMIC CHIP	220PF	10%	50V
C646	1-126-960-11	ELECT	1uF	20%	50V
C648	1-125-837-91	CERAMIC CHIP	1uF	10%	6.3V
C649	1-162-960-11	CERAMIC CHIP	220PF	10%	50V
C650	1-125-837-91	CERAMIC CHIP	1uF	10%	6.3V
C651	1-162-927-11	CERAMIC CHIP	100PF	5%	50V (EXCEPT US, CND)
C652	1-125-837-91	CERAMIC CHIP	1uF	10%	6.3V
C653	1-162-927-11	CERAMIC CHIP	100PF	5%	50V (EXCEPT US, CND)
C654	1-125-837-91	CERAMIC CHIP	1uF	10%	6.3V
C655	1-162-960-11	CERAMIC CHIP	220PF	10%	50V
C656	1-125-837-91	CERAMIC CHIP	1uF	10%	6.3V
C658	1-125-837-91	CERAMIC CHIP	1uF	10%	6.3V
C659	1-162-960-11	CERAMIC CHIP	220PF	10%	50V
C660	1-162-960-11	CERAMIC CHIP	220PF	10%	50V
C661	1-126-964-11	ELECT	10uF	20%	50V
C662	1-100-566-91	CERAMIC CHIP	0.1uF	10%	25V
C663	1-126-960-11	ELECT	1uF	20%	50V
C664	1-126-960-11	ELECT	1uF	20%	50V
C665	1-126-960-11	ELECT	1uF	20%	50V
C666	1-162-960-11	CERAMIC CHIP	220PF	10%	50V
C667	1-126-933-11	ELECT	100uF	20%	16V
C668	1-100-597-91	CERAMIC CHIP	0.1uF	10%	25V (EC55: EXCEPT AEP, UK, RU)

Ref. No.	Part No.	Description			Remark
C669	1-126-923-91	ELECT	220uF	20%	10V
C670	1-162-927-11	CERAMIC CHIP	100PF	5%	50V
			(EC55: EXCEPT AEP, UK, RU)		
C671	1-104-658-91	ELECT	100uF	20%	10V
C673	1-126-925-91	ELECT	470uF	20%	10V
C675	1-126-960-11	ELECT	1uF	20%	50V
C676	1-126-960-11	ELECT	1uF	20%	50V
C677	1-135-516-11	ELECT	3300uF	20%	63V
			(EC77: EXCEPT US, CND, AEP, RU)		
C678	1-135-516-11	ELECT	3300uF	20%	63V
			(EC77: EXCEPT US, CND, AEP, RU)		
C679	1-100-566-91	CERAMIC CHIP	0.1uF	10%	25V
C680	1-162-966-11	CERAMIC CHIP	0.0022uF	10%	50V
C681	1-162-966-11	CERAMIC CHIP	0.0022uF	10%	50V
C682	1-162-966-11	CERAMIC CHIP	0.0022uF	10%	50V
C683	1-162-966-11	CERAMIC CHIP	0.0022uF	10%	50V
C684	1-162-915-11	CERAMIC CHIP	10PF	0.5PF	50V
			(EC55: EXCEPT AEP, UK, RU)		
C684	1-162-919-11	CERAMIC CHIP	22PF	5%	50V
			(EC77: EXCEPT AEP, RU/GX99)		
C684	1-164-315-11	CERAMIC CHIP	470PF	5%	50V
					(AEP, UK, RU)
C685	1-162-915-11	CERAMIC CHIP	10PF	0.5PF	50V
			(EC55: EXCEPT AEP, UK, RU)		
C685	1-162-919-11	CERAMIC CHIP	22PF	5%	50V
			(EC77: EXCEPT AEP, RU/GX99)		
C685	1-164-315-11	CERAMIC CHIP	470PF	5%	50V
					(AEP, UK, RU)
C686	1-162-915-11	CERAMIC CHIP	10PF	0.5PF	50V
			(EC55: EXCEPT AEP, UK, RU)		
C686	1-162-919-11	CERAMIC CHIP	22PF	5%	50V
			(EC77: EXCEPT AEP, RU/GX99)		
C687	1-162-964-11	CERAMIC CHIP	0.001uF	10%	50V
					(EXCEPT AEP, UK, RU)
C688	1-162-964-11	CERAMIC CHIP	0.001uF	10%	50V
					(EXCEPT AEP, UK, RU)
C689	1-162-962-11	CERAMIC CHIP	470PF	10%	50V
C690	1-162-966-11	CERAMIC CHIP	0.0022uF	10%	50V
C691	1-100-566-91	CERAMIC CHIP	0.1uF	10%	25V
C692	1-162-970-11	CERAMIC CHIP	0.01uF	10%	25V
C693	1-100-566-91	CERAMIC CHIP	0.1uF	10%	25V
C694	1-100-566-91	CERAMIC CHIP	0.1uF	10%	25V
C695	1-125-837-91	CERAMIC CHIP	1uF	10%	6.3V
C696	1-125-837-91	CERAMIC CHIP	1uF	10%	6.3V
C698	1-162-964-11	CERAMIC CHIP	0.001uF	10%	50V
					(EXCEPT AEP, UK, RU)
C699	1-162-964-11	CERAMIC CHIP	0.001uF	10%	50V
					(AEP, UK, RU)
C700	1-162-964-11	CERAMIC CHIP	0.001uF	10%	50V
					(AEP, UK, RU)
C701	1-162-970-11	CERAMIC CHIP	0.01uF	10%	25V
					(EC77/GX99)
C702	1-162-970-11	CERAMIC CHIP	0.01uF	10%	25V
					(EC77/GX99)
C703	1-162-970-11	CERAMIC CHIP	0.01uF	10%	25V
					(EC77/GX99)
C704	1-162-970-11	CERAMIC CHIP	0.01uF	10%	25V
					(EC77/GX99)
C802	1-126-933-11	ELECT	100uF	20%	16V
C803	1-125-837-91	CERAMIC CHIP	1uF	10%	6.3V
C804	1-162-918-11	CERAMIC CHIP	18PF	5%	50V

Ref. No.	Part No.	Description			Remark
C805	1-117-863-11	CERAMIC CHIP	0.47uF	10%	6.3V
C806	1-162-962-11	CERAMIC CHIP	470PF	10%	50V
C807	1-125-837-91	CERAMIC CHIP	1uF	10%	6.3V
C808	1-162-918-11	CERAMIC CHIP	18PF	5%	50V
C809	1-162-927-11	CERAMIC CHIP	100PF	5%	50V
C810	1-162-927-11	CERAMIC CHIP	100PF	5%	50V
C811	1-162-927-11	CERAMIC CHIP	100PF	5%	50V
C814	1-162-968-11	CERAMIC CHIP	0.0047uF	10%	50V
					(EXCEPT US, CND)
C814	1-162-970-11	CERAMIC CHIP	0.01uF	10%	25V
					(US, CND)
C815	1-162-968-11	CERAMIC CHIP	0.0047uF	10%	50V
					(EXCEPT US, CND)
C815	1-162-970-11	CERAMIC CHIP	0.01uF	10%	25V
					(US, CND)
C816	1-162-970-11	CERAMIC CHIP	0.01uF	10%	25V
C817	1-162-970-11	CERAMIC CHIP	0.01uF	10%	25V
C819	1-162-962-11	CERAMIC CHIP	470PF	10%	50V
C820	1-162-910-11	CERAMIC CHIP	5PF	0.25PF	50V
C821	1-162-966-11	CERAMIC CHIP	0.0022uF	10%	50V
C822	1-126-965-91	ELECT	22uF	20%	50V
C823	1-126-923-91	ELECT	220uF	20%	10V
C824	1-165-908-11	CERAMIC CHIP	1uF	10%	10V
C826	1-162-964-11	CERAMIC CHIP	0.001uF	10%	50V
C827	1-165-176-11	CERAMIC CHIP	0.047uF	10%	16V
C828	1-162-927-11	CERAMIC CHIP	100PF	5%	50V
C829	1-117-863-11	CERAMIC CHIP	0.47uF	10%	6.3V
C830	1-162-907-11	CERAMIC CHIP	2PF	0.25PF	50V
C831	1-117-863-11	CERAMIC CHIP	0.47uF	10%	6.3V
C832	1-117-863-11	CERAMIC CHIP	0.47uF	10%	6.3V
C833	1-126-923-91	ELECT	220uF	20%	10V
C834	1-162-915-11	CERAMIC CHIP	10PF	0.5PF	50V
C835	1-165-176-11	CERAMIC CHIP	0.047uF	10%	16V
C836	1-164-227-11	CERAMIC CHIP	0.022uF	10%	25V
C837	1-162-915-11	CERAMIC CHIP	10PF	0.5PF	50V
C838	1-162-964-11	CERAMIC CHIP	0.001uF	10%	50V
C840	1-100-566-91	CERAMIC CHIP	0.1uF	10%	25V
C841	1-162-964-11	CERAMIC CHIP	0.001uF	10%	50V
C843	1-164-156-11	CERAMIC CHIP	0.1uF		25V
C844	1-100-566-91	CERAMIC CHIP	0.1uF	10%	25V
C845	1-115-467-11	CERAMIC CHIP	0.22uF	10%	10V
C846	1-162-970-11	CERAMIC CHIP	0.01uF	10%	25V
C847	1-100-566-91	CERAMIC CHIP	0.1uF	10%	25V
C848	1-164-156-11	CERAMIC CHIP	0.1uF		25V
C849	1-162-970-11	CERAMIC CHIP	0.01uF	10%	25V
C850	1-100-566-91	CERAMIC CHIP	0.1uF	10%	25V
		< FILTER >			
CF801	1-781-962-21	FILTER, CERAMIC			
		< CONNECTOR >			
CN601	1-819-131-11	PIN, CONNECTOR 3P			
* CN602	1-569-496-11	SOCKET, CONNECTOR 10P (EC77/GX99)			
* CN603	1-569-496-11	SOCKET, CONNECTOR 10P			
CN604	1-819-136-11	PIN, CONNECTOR 8P			
CN605	1-568-828-11	CONNECTOR, FFC 9P			
CN606	1-784-731-11	CONNECTOR, FFC 9P (EXCEPT US, CND)			
CN607	1-779-295-11	CONNECTOR, FFC (LIF (NON-ZIF)) 27P			

Ref. No.	Part No.	Description	Remark
CN608	1-779-289-11	CONNECTOR, FFC (LIF (NON-ZIF)) 21P	
* CN801	1-506-680-11	PLUG, CONNECTOR (2.5MM) 3P (ANTENNA)	
		< DIODE >	
D601	6-500-335-01	DIODE MC2838-T112-1	
D602	6-500-335-01	DIODE MC2838-T112-1	
D603	8-719-404-50	DIODE MA111-TX (EC77/GX99)	
D604	8-719-404-50	DIODE MA111-TX	
D605	8-719-404-50	DIODE MA111-TX	
D606	8-719-000-07	DIODE MC2836	
D607	6-501-046-01	DIODE 1N5402-F46	
D608	6-501-046-01	DIODE 1N5402-F46	
D609	6-501-046-01	DIODE 1N5402-F46	
D610	6-501-046-01	DIODE 1N5402-F46	
D611	8-719-063-79	DIODE 1N4002B	
D612	8-719-063-79	DIODE 1N4002B	
D614	8-719-404-50	DIODE MA111-TX	
D615	8-719-063-79	DIODE 1N4002B	
D616	8-719-404-50	DIODE MA111-TX	
D617	6-500-335-01	DIODE MC2838-T112-1	
D618	6-501-719-01	DIODE MAZ8039GHLS0	
D619	8-719-063-79	DIODE 1N4002B	
D620	8-719-063-79	DIODE 1N4002B	
D621	6-501-722-01	DIODE MAZ8043GMLS0	
D622	6-501-752-01	DIODE MAZ8082GMLS0	
D623	8-719-062-51	DIODE 1PS226-115	
D801	6-501-142-01	DIODE SVC347A-TL-E	
D802	8-719-062-51	DIODE 1PS226-115	
D803	6-501-369-01	DIODE SVC230-TB-E	
D804	6-501-369-01	DIODE SVC230-TB-E	
D805	8-719-062-51	DIODE 1PS226-115	
D806	8-719-062-51	DIODE 1PS226-115	
		< FERRITE BEAD >	
FB601	1-412-473-21	INDUCTOR (SMALL TYPE)	
		< FILTER >	
FL801	1-130-483-00	CAP, PE TEREPHTHALATE 0.01MF	
FL802	1-760-393-11	FILTER, CERAMIC	
FL803	1-236-711-21	FILTER, BAND PASS	
		< IC >	
IC602	6-710-289-01	IC R2S15904SP	
IC801	6-708-840-01	IC LV23003VA	
		< JACK >	
J601	1-815-025-11	JACK, PIN 1P (SUBWOOFER) (GX99)	
		< JUMPER RESISTOR >	
JR601	1-216-864-11	SHORT CHIP 0	
JR602	1-216-864-11	SHORT CHIP 0	
JR603	1-216-296-11	SHORT CHIP 0	
JR604	1-216-864-11	SHORT CHIP 0	
		< COIL >	
L601	1-456-107-11	COIL, AIR-CORE (EC77/GX99)	
L602	1-456-107-11	COIL, AIR-CORE (EC77/GX99)	
L603	1-456-107-11	COIL, AIR-CORE	
L604	1-456-107-11	COIL, AIR-CORE	
L801	1-456-596-11	COIL, MW OSC	
L802	1-457-168-11	COIL, DET	
L803	1-457-162-11	COIL, AIR-CORE	
L804	1-457-163-11	COIL, AIR-CORE	
L805	1-457-161-11	COIL, AM ANTENNA	
		< TRANSISTOR >	
Q601	8-729-037-03	TRANSISTOR KTA1266GR-AT	
Q602	8-729-120-28	TRANSISTOR 2SC1623-L5L6	
Q603	8-729-120-28	TRANSISTOR 2SC1623-L5L6	
Q604	8-729-120-28	TRANSISTOR 2SC1623-L5L6	
Q605	8-729-120-28	TRANSISTOR 2SC1623-L5L6	
Q606	8-729-120-28	TRANSISTOR 2SC1623-L5L6	
Q608	8-729-120-28	TRANSISTOR 2SC1623-L5L6	
Q616	8-729-120-28	TRANSISTOR 2SC1623-L5L6	(EXCEPT US, CND)
Q617	8-729-120-28	TRANSISTOR 2SC1623-L5L6	(EXCEPT US, CND)
Q618	8-729-600-22	TRANSISTOR 2SA1235-F	
Q619	8-729-120-28	TRANSISTOR 2SC1623-L5L6	
Q622	8-729-120-28	TRANSISTOR 2SC1623-L5L6	
Q624	8-729-036-86	TRANSISTOR KTC3203Y-AT	
Q801	8-729-120-28	TRANSISTOR 2SC1623-L5L6	
Q802	8-729-120-28	TRANSISTOR 2SC1623-L5L6	
Q803	6-550-304-01	TRANSISTOR 2SC5477-T122-1	
		< RESISTOR >	
R601	1-216-817-11	METAL CHIP 470 5% 1/10W	
R603	1-216-793-11	METAL CHIP 4.7 5% 1/10W	(EC77: US, CND/GX99)
R603	1-216-794-11	METAL CHIP 5.6 5% 1/10W	(EC55/EC77: EXCEPT US, CND)
R604	1-216-845-11	METAL CHIP 100K 5% 1/10W	
R605	1-216-799-11	METAL CHIP 15 5% 1/10W	(EC77: US, CND/GX99)
R606	1-216-797-11	METAL CHIP 10 5% 1/10W	(EC77/GX99)
R607	1-216-797-11	METAL CHIP 10 5% 1/10W	(EC77/GX99)
R608	1-216-797-11	METAL CHIP 10 5% 1/10W	(EC77/GX99)
R609	1-216-829-11	METAL CHIP 4.7K 5% 1/10W	
R610	1-216-829-11	METAL CHIP 4.7K 5% 1/10W	
R611	1-216-797-11	METAL CHIP 10 5% 1/10W	
R612	1-216-797-11	METAL CHIP 10 5% 1/10W	
R613	1-216-833-11	METAL CHIP 10K 5% 1/10W	
R614	1-216-833-11	METAL CHIP 10K 5% 1/10W	
R615	1-216-797-11	METAL CHIP 10 5% 1/10W	
R616	1-216-828-11	METAL CHIP 3.9K 5% 1/10W	(EC55)
R616	1-216-832-11	METAL CHIP 8.2K 5% 1/10W	(EC77: AEP, RU)
R616	1-216-833-11	METAL CHIP 10K 5% 1/10W	(EC77: E2, E3, E51, MX)
R616	1-216-835-11	METAL CHIP 15K 5% 1/10W	(EC77: US, CND/GX99)
R617	1-216-833-11	METAL CHIP 10K 5% 1/10W	

MAIN

Ref. No.	Part No.	Description			Remark
R618	1-216-833-11	METAL CHIP	10K	5%	1/10W
R619	1-216-828-11	METAL CHIP	3.9K	5%	1/10W (EC55)
R619	1-216-832-11	METAL CHIP	8.2K	5%	1/10W (EC77: AEP, RU)
R619	1-216-833-11	METAL CHIP	10K	5%	1/10W (EC77: E2, E3, E51, MX)
R619	1-216-835-11	METAL CHIP	15K	5%	1/10W (EC77: US, CND/GX99)
R620	1-216-829-11	METAL CHIP	4.7K	5%	1/10W
R621	1-216-829-11	METAL CHIP	4.7K	5%	1/10W
R622	1-216-839-11	METAL CHIP	33K	5%	1/10W
R623	1-216-833-11	METAL CHIP	10K	5%	1/10W
R624	1-216-833-11	METAL CHIP	10K	5%	1/10W
R625	1-216-839-11	METAL CHIP	33K	5%	1/10W
R626	1-216-833-11	METAL CHIP	10K	5%	1/10W
R627	1-216-829-11	METAL CHIP	4.7K	5%	1/10W
R629	1-216-829-11	METAL CHIP	4.7K	5%	1/10W
R630	1-216-841-11	METAL CHIP	47K	5%	1/10W
R631	1-216-797-11	METAL CHIP	10	5%	1/10W (EC77/GX99)
R632	1-216-845-11	METAL CHIP	100K	5%	1/10W (EC77/GX99)
R633	1-216-845-11	METAL CHIP	100K	5%	1/10W (EC77/GX99)
R634	1-249-401-11	CARBON	47	5%	1/4W (EC77/GX99)
R635	1-249-401-11	CARBON	47	5%	1/4W (EC77/GX99)
R636	1-249-401-11	CARBON	47	5%	1/4W (EC77/GX99)
R638	1-249-401-11	CARBON	47	5%	1/4W
R639	1-216-845-11	METAL CHIP	100K	5%	1/10W
R640	1-216-845-11	METAL CHIP	100K	5%	1/10W
R641	1-249-401-11	CARBON	47	5%	1/4W
R642	1-249-401-11	CARBON	47	5%	1/4W
R643	1-216-829-11	METAL CHIP	4.7K	5%	1/10W
R644	1-216-821-11	METAL CHIP	1K	5%	1/10W
R645	1-216-825-11	METAL CHIP	2.2K	5%	1/10W (EC77: MX)
R645	1-216-829-11	METAL CHIP	4.7K	5%	1/10W (EC55/EC77: EXCEPT MX/GX99)
R646	1-216-809-11	METAL CHIP	100	5%	1/10W
R647	1-216-797-11	METAL CHIP	10	5%	1/10W
R648	1-216-841-11	METAL CHIP	47K	5%	1/10W
R649	1-216-825-11	METAL CHIP	2.2K	5%	1/10W
R650	1-216-829-11	METAL CHIP	4.7K	5%	1/10W
R651	1-216-829-11	METAL CHIP	4.7K	5%	1/10W
R652	1-216-809-11	METAL CHIP	100	5%	1/10W
R655	1-216-864-11	SHORT CHIP	0		
R658	1-260-087-11	CARBON	100	5%	1/2W
R660	1-260-087-11	CARBON	100	5%	1/2W
R661	1-260-087-11	CARBON	100	5%	1/2W
R662	1-260-087-11	CARBON	100	5%	1/2W
R663	1-260-087-11	CARBON	100	5%	1/2W
R664	1-260-087-11	CARBON	100	5%	1/2W
R666	1-216-821-11	METAL CHIP	1K	5%	1/10W
R667	1-216-841-11	METAL CHIP	47K	5%	1/10W
R668	1-260-087-11	CARBON	100	5%	1/2W
R671	1-260-087-11	CARBON	100	5%	1/2W
R674	1-249-401-11	CARBON	47	5%	1/4W
R675	1-249-401-11	CARBON	47	5%	1/4W
R676	1-216-833-11	METAL CHIP	10K	5%	1/10W
R677	1-216-833-11	METAL CHIP	10K	5%	1/10W
R678	1-216-841-11	METAL CHIP	47K	5%	1/10W
R679	1-216-829-11	METAL CHIP	4.7K	5%	1/10W (EXCEPT US, CND)
R680	1-216-829-11	METAL CHIP	4.7K	5%	1/10W (EXCEPT US, CND)
R681	1-216-832-11	METAL CHIP	8.2K	5%	1/10W
R682	1-216-833-11	METAL CHIP	10K	5%	1/10W (EXCEPT US, CND)
R683	1-216-826-11	METAL CHIP	2.7K	5%	1/10W (EXCEPT US, CND)
R684	1-216-832-11	METAL CHIP	8.2K	5%	1/10W
R685	1-216-841-11	METAL CHIP	47K	5%	1/10W
R686	1-216-842-11	METAL CHIP	56K	5%	1/10W
R687	1-216-849-11	METAL CHIP	220K	5%	1/10W
R688	1-216-833-11	METAL CHIP	10K	5%	1/10W
R689	1-216-838-11	METAL CHIP	27K	5%	1/10W
R690	1-216-825-11	METAL CHIP	2.2K	5%	1/10W
R691	1-216-833-11	METAL CHIP	10K	5%	1/10W
R692	1-216-829-11	METAL CHIP	4.7K	5%	1/10W (EXCEPT US, CND AEP, UK, RU)
R692	1-216-833-11	METAL CHIP	10K	5%	1/10W (US, CND AEP, UK, RU)
R693	1-216-825-11	METAL CHIP	2.2K	5%	1/10W
R694	1-216-833-11	METAL CHIP	10K	5%	1/10W (EXCEPT US, CND)
R695	1-216-826-11	METAL CHIP	2.7K	5%	1/10W (EXCEPT US, CND)
R696	1-216-833-11	METAL CHIP	10K	5%	1/10W
R697	1-216-821-11	METAL CHIP	1K	5%	1/10W
R700	1-216-829-11	METAL CHIP	4.7K	5%	1/10W
R701	1-216-864-11	SHORT CHIP	0 (US, CND)		
R702	1-216-864-11	SHORT CHIP	0 (US, CND)		
R704	1-216-829-11	METAL CHIP	4.7K	5%	1/10W
R706	1-216-813-11	METAL CHIP	220	5%	1/10W
R707	1-216-813-11	METAL CHIP	220	5%	1/10W
R708	1-216-833-11	METAL CHIP	10K	5%	1/10W
R709	1-216-821-11	METAL CHIP	1K	5%	1/10W
R710	1-216-839-11	METAL CHIP	33K	5%	1/10W (GX99)
R711	1-216-839-11	METAL CHIP	33K	5%	1/10W (GX99)
R712	1-216-820-11	METAL CHIP	820	5%	1/10W (GX99)
R715	1-216-809-11	METAL CHIP	100	5%	1/10W
R716	1-216-821-11	METAL CHIP	1K	5%	1/10W
R717	1-249-403-11	CARBON	68	5%	1/4W
R718	1-249-403-11	CARBON	68	5%	1/4W
R719	1-249-403-11	CARBON	68	5%	1/4W
R720	1-216-837-11	METAL CHIP	22K	5%	1/10W
R722	1-216-809-11	METAL CHIP	100	5%	1/10W
R724	1-249-395-11	CARBON	15	5%	1/4W (EC77: US, CND/GX99)
R724	1-247-791-91	CARBON	22	5%	1/4W (EC55/EC77: EXCEPT US, CND)
R725	1-249-395-11	CARBON	15	5%	1/4W (EC77: US, CND/GX99)
R725	1-247-791-91	CARBON	22	5%	1/4W (EC55/EC77: EXCEPT US, CND)
R726	1-249-395-11	CARBON	15	5%	1/4W (EC77: US, CND/GX99)
R726	1-247-791-91	CARBON	22	5%	1/4W (EC55/EC77: EXCEPT US, CND)

MAIN PANEL

Ref. No.	Part No.	Description			Remark
R727	1-216-829-11	METAL CHIP	4.7K	5%	1/10W
R728	1-216-829-11	METAL CHIP	4.7K	5%	1/10W
R729	1-216-845-11	METAL CHIP	100K	5%	1/10W
R731	1-216-809-11	METAL CHIP	100	5%	1/10W (AEP, UK, RU)
R731	1-216-864-11	SHORT CHIP	0 (EXCEPT AEP, UK, RU)		
R732	1-216-809-11	METAL CHIP	100	5%	1/10W (AEP, UK, RU)
R732	1-216-864-11	SHORT CHIP	0 (EXCEPT AEP, UK, RU)		
R801	1-216-809-11	METAL CHIP	100	5%	1/10W
R802	1-216-801-11	METAL CHIP	22	5%	1/10W
R803	1-216-825-11	METAL CHIP	2.2K	5%	1/10W
R804	1-216-801-11	METAL CHIP	22	5%	1/10W
R805	1-216-853-11	METAL CHIP	470K	5%	1/10W
R806	1-216-841-11	METAL CHIP	47K	5%	1/10W
R807	1-216-837-11	METAL CHIP	22K	5%	1/10W
R808	1-216-801-11	METAL CHIP	22	5%	1/10W
R809	1-216-809-11	METAL CHIP	100	5%	1/10W
R810	1-216-829-11	METAL CHIP	4.7K	5%	1/10W
R811	1-216-845-11	METAL CHIP	100K	5%	1/10W
R812	1-216-841-11	METAL CHIP	47K	5%	1/10W
R813	1-216-853-11	METAL CHIP	470K	5%	1/10W
R814	1-216-837-11	METAL CHIP	22K	5%	1/10W
R815	1-216-833-11	METAL CHIP	10K	5%	1/10W
R816	1-216-821-11	METAL CHIP	1K	5%	1/10W
R817	1-216-841-11	METAL CHIP	47K	5%	1/10W
R818	1-216-833-11	METAL CHIP	10K	5%	1/10W
R819	1-216-839-11	METAL CHIP	33K	5%	1/10W
R820	1-216-829-11	METAL CHIP	4.7K	5%	1/10W
R821	1-216-829-11	METAL CHIP	4.7K	5%	1/10W
R822	1-216-809-11	METAL CHIP	100	5%	1/10W
R823	1-216-833-11	METAL CHIP	10K	5%	1/10W
R824	1-216-817-11	METAL CHIP	470	5%	1/10W
R825	1-216-829-11	METAL CHIP	4.7K	5%	1/10W
R826	1-216-821-11	METAL CHIP	1K	5%	1/10W
R827	1-216-845-11	METAL CHIP	100K	5%	1/10W
R829	1-216-829-11	METAL CHIP	4.7K	5%	1/10W
R830	1-216-827-11	METAL CHIP	3.3K	5%	1/10W
R831	1-216-825-11	METAL CHIP	2.2K	5%	1/10W
R832	1-216-857-11	METAL CHIP	1M	5%	1/10W
R836	1-218-867-11	METAL CHIP	6.8K	0.5%	1/10W
R837	1-216-845-11	METAL CHIP	100K	5%	1/10W
R838	1-216-837-11	METAL CHIP	22K	5%	1/10W
R839	1-216-797-11	METAL CHIP	10	5%	1/10W
R840	1-216-864-11	SHORT CHIP	0		
R841	1-216-833-11	METAL CHIP	10K	5%	1/10W
R842	1-216-864-11	SHORT CHIP	0		
R843	1-216-845-11	METAL CHIP	100K	5%	1/10W
R844	1-216-825-11	METAL CHIP	2.2K	5%	1/10W
R846	1-216-797-11	METAL CHIP	10	5%	1/10W
R847	1-216-864-11	SHORT CHIP	0		
R848	1-216-809-11	METAL CHIP	100	5%	1/10W
R849	1-216-813-11	METAL CHIP	220	5%	1/10W
R850	1-216-809-11	METAL CHIP	100	5%	1/10W
R851	1-216-801-11	METAL CHIP	22	5%	1/10W
R852	1-216-825-11	METAL CHIP	2.2K	5%	1/10W
R853	1-216-819-11	METAL CHIP	680	5%	1/10W

Ref. No.	Part No.	Description			Remark
		< RELAY >			
RY601	1-755-307-11	RELAY (EC77/GX99)			
RY602	1-755-307-11	RELAY			
		< TRANSFORMER >			
T801	1-433-741-11	TRANSFORMER, IF			
		< TERMINAL >			
TB601	1-780-381-11	TERMINAL BOARD, PUSH (ANTENNA) 4P (SPEAKER HIGH FREQ.)(EC77/GX99)			
TB602	1-536-708-81	TERMINAL BOARD, PUSH (4P) (SPEAKER LOW FREQ.)			
		< VIBRATOR >			
X801	1-813-917-11	VIBRATOR, CRYSTAL (75kHz)			
**********					
	A-1218-504-A	PANEL BOARD, COMPLETE (GX99)			
	A-1218-536-A	PANEL BOARD, COMPLETE (EC77: US, CND)			
	A-1218-562-A	PANEL BOARD, COMPLETE (EC77: AEP)			
	A-1218-590-A	PANEL BOARD, COMPLETE (EC77: RU)			
	A-1218-598-A	PANEL BOARD, COMPLETE (EC77: E3)			
	A-1218-635-A	PANEL BOARD, COMPLETE (EC77: E2)			
	A-1218-642-A	PANEL BOARD, COMPLETE (EC77: E51)			
	A-1218-654-A	PANEL BOARD, COMPLETE (EC77: MX)			
	A-1218-690-A	PANEL BOARD, COMPLETE (EC55: US)			
	A-1218-723-A	PANEL BOARD, COMPLETE (EC55: AEP, UK)			
	A-1218-754-A	PANEL BOARD, COMPLETE (EC55: RU)			
	A-1218-812-A	PANEL BOARD, COMPLETE (EC55: E2)			
	A-1218-819-A	PANEL BOARD, COMPLETE (EC55: E51)			
	A-1218-831-A	PANEL BOARD, COMPLETE (EC55: MX)			
		**********			
	2-649-117-01	HOLDER (LCD)			
	2-649-178-01	PLATE, LIGHT GUIDE			
	2-649-179-01	SHEET (LCD)			
	2-665-175-01	SHEET (REFLECTOR)			
		< CAPACITOR >			
C301	1-164-156-11	CERAMIC CHIP	0.1uF		25V
C302	1-126-964-11	ELECT	10uF	20%	50V
C303	1-126-964-11	ELECT	10uF	20%	50V
C304	1-164-156-11	CERAMIC CHIP	0.1uF		25V
C305	1-126-964-11	ELECT	10uF	20%	50V
C306	1-104-655-91	ELECT	470uF	20%	6.3V
C307	1-104-655-91	ELECT	470uF	20%	6.3V
C308	1-100-566-91	CERAMIC CHIP	0.1uF	10%	25V
C309	1-126-965-91	ELECT	22uF	20%	50V
C310	1-164-156-11	CERAMIC CHIP	0.1uF		25V
C311	1-164-156-11	CERAMIC CHIP	0.1uF		25V
C312	1-164-156-11	CERAMIC CHIP	0.1uF		25V
C313	1-115-467-11	CERAMIC CHIP	0.22uF	10%	10V
C317	1-162-964-11	CERAMIC CHIP	0.001uF	10%	50V
C319	1-162-919-11	CERAMIC CHIP	22PF	5%	50V
C320	1-162-919-11	CERAMIC CHIP	22PF	5%	50V
C321	1-164-156-11	CERAMIC CHIP	0.1uF		25V
C330	1-164-156-11	CERAMIC CHIP	0.1uF		25V

Ref. No.	Part No.	Description			Remark
C332	1-162-970-11	CERAMIC CHIP	0.01uF	10%	25V
C340	1-165-176-11	CERAMIC CHIP	0.047uF	10%	16V
C341	1-164-156-11	CERAMIC CHIP	0.1uF		25V
C342	1-164-156-11	CERAMIC CHIP	0.1uF		25V
C343	1-126-965-91	ELECT	22uF	20%	50V
		< CONNECTOR >			
CN301	1-779-564-21	CONNECTOR, FFC (LIF (NON-ZIF)) 27P			
CN302	1-784-735-11	CONNECTOR, FFC 13P			
		< DIODE >			
D301	6-501-722-01	DIODE MAZ8043GMLS0			
D302	8-719-404-50	DIODE MA111-TX			
D303	8-719-000-07	DIODE MC2836			
D304	8-719-404-50	DIODE MA111-TX			
D305	8-719-404-50	DIODE MA111-TX			
		< IC >			
IC301	6-807-577-01	IC MB90803PF-G-130E1			
IC302	6-600-349-31	IC NJL24H400A			
		< JUMPER RESISTOR >			
JR301	1-216-864-11	SHORT CHIP	0		
JR302	1-216-296-11	SHORT CHIP	0		
JR303	1-216-296-11	SHORT CHIP	0		
JR304	1-216-296-11	SHORT CHIP	0		
JR305	1-216-296-11	SHORT CHIP	0		
JR306	1-216-864-11	SHORT CHIP	0		
JR307	1-216-296-11	SHORT CHIP	0		
JR308	1-216-296-11	SHORT CHIP	0		
JR309	1-216-296-11	SHORT CHIP	0		
JR310	1-216-864-11	SHORT CHIP	0		
JR311	1-216-864-11	SHORT CHIP	0		
JR312	1-216-296-11	SHORT CHIP	0		
JR313	1-216-864-11	SHORT CHIP	0		
JR314	1-216-296-11	SHORT CHIP	0		
JR315	1-216-296-11	SHORT CHIP	0		
JR316	1-216-296-11	SHORT CHIP	0		
JR317	1-216-296-11	SHORT CHIP	0		
JR318	1-216-296-11	SHORT CHIP	0		
JR319	1-216-864-11	SHORT CHIP	0		
JR320	1-216-296-11	SHORT CHIP	0		
JR321	1-216-296-11	SHORT CHIP	0		
		< LIQUID CRYSTAL DISPLAY >			
LCD301	1-805-973-11	DISPLAY PANEL, LIQUID CRYSTAL			
		< LED >			
LED301	6-501-479-01	DIODE 1L0341Y23E0CA602 (BACK LIGHT)			
		< TRANSISTOR >			
Q301	8-729-120-28	TRANSISTOR	2SC1623-L5L6		
Q302	8-729-037-13	TRANSISTOR	KTA1271Y		
Q303	8-729-120-28	TRANSISTOR	2SC1623-L5L6		
Q304	8-729-120-28	TRANSISTOR	2SC1623-L5L6		
Q305	8-729-120-28	TRANSISTOR	2SC1623-L5L6		

Ref. No.	Part No.	Description			Remark
Q306	1-801-806-11	TRANSISTOR	DTC144EKA		
Q307	8-729-600-22	TRANSISTOR	2SA1235-F		
Q308	1-801-806-11	TRANSISTOR	DTC144EKA		
Q309	8-729-040-76	TRANSISTOR	KTA1273-Y-AT		
Q310	8-729-120-28	TRANSISTOR	2SC1623-L5L6		
Q311	8-729-024-43	TRANSISTOR	2SA1365-T112-1EF		
Q312	8-729-024-43	TRANSISTOR	2SA1365-T112-1EF		
Q313	8-729-024-43	TRANSISTOR	2SA1365-T112-1EF		
Q314	8-729-024-43	TRANSISTOR	2SA1365-T112-1EF		
Q315	8-729-047-62	TRANSISTOR	2SC3440-T12-1F		
Q316	8-729-047-62	TRANSISTOR	2SC3440-T12-1F		
Q317	8-729-047-62	TRANSISTOR	2SC3440-T12-1F		
Q318	8-729-047-62	TRANSISTOR	2SC3440-T12-1F		
		< RESISTOR >			
R301	1-216-809-11	METAL CHIP	100	5%	1/10W
R302	1-216-809-11	METAL CHIP	100	5%	1/10W
R303	1-216-809-11	METAL CHIP	100	5%	1/10W
R304	1-216-809-11	METAL CHIP	100	5%	1/10W
R305	1-216-809-11	METAL CHIP	100	5%	1/10W
R306	1-216-809-11	METAL CHIP	100	5%	1/10W
R307	1-216-809-11	METAL CHIP	100	5%	1/10W
R308	1-216-809-11	METAL CHIP	100	5%	1/10W
R309	1-216-809-11	METAL CHIP	100	5%	1/10W
R310	1-216-809-11	METAL CHIP	100	5%	1/10W
R311	1-216-809-11	METAL CHIP	100	5%	1/10W
R312	1-216-809-11	METAL CHIP	100	5%	1/10W
R313	1-216-809-11	METAL CHIP	100	5%	1/10W
R314	1-216-809-11	METAL CHIP	100	5%	1/10W
R315	1-216-809-11	METAL CHIP	100	5%	1/10W
R316	1-216-809-11	METAL CHIP	100	5%	1/10W
R317	1-216-809-11	METAL CHIP	100	5%	1/10W
R318	1-216-809-11	METAL CHIP	100	5%	1/10W
R319	1-216-809-11	METAL CHIP	100	5%	1/10W
R320	1-216-809-11	METAL CHIP	100	5%	1/10W
R321	1-216-809-11	METAL CHIP	100	5%	1/10W
R322	1-216-809-11	METAL CHIP	100	5%	1/10W
R323	1-216-809-11	METAL CHIP	100	5%	1/10W
R324	1-216-809-11	METAL CHIP	100	5%	1/10W
R325	1-216-797-11	METAL CHIP	10	5%	1/10W
R326	1-216-809-11	METAL CHIP	100	5%	1/10W
R327	1-216-809-11	METAL CHIP	100	5%	1/10W
R328	1-216-833-11	METAL CHIP	10K	5%	1/10W
R329	1-216-825-11	METAL CHIP	2.2K	5%	1/10W
R330	1-216-819-11	METAL CHIP	680	5%	1/10W
R331	1-216-845-11	METAL CHIP	100K	5%	1/10W
R332	1-216-833-11	METAL CHIP	10K	5%	1/10W
R333	1-216-845-11	METAL CHIP	100K	5%	1/10W
R334	1-216-833-11	METAL CHIP	10K	5%	1/10W
R335	1-216-833-11	METAL CHIP	10K	5%	1/10W
R336	1-216-833-11	METAL CHIP	10K	5%	1/10W
R337	1-216-864-11	SHORT CHIP	0		
R338	1-216-789-11	METAL CHIP	2.2	5%	1/10W
R339	1-216-789-11	METAL CHIP	2.2	5%	1/10W
R340	1-216-829-11	METAL CHIP	4.7K	5%	1/10W
R341	1-216-839-11	METAL CHIP	33K	5%	1/10W
R342	1-216-849-11	METAL CHIP	220K	5%	1/10W
R343	1-216-853-11	METAL CHIP	470K	5%	1/10W

Ref. No.	Part No.	Description			Remark
R344	1-216-826-11	METAL CHIP	2.7K	5%	1/10W
R345	1-216-829-11	METAL CHIP	4.7K	5%	1/10W
R346	1-216-841-11	METAL CHIP	47K	5%	1/10W
R347	1-216-817-11	METAL CHIP	470	5%	1/10W
R348	1-216-841-11	METAL CHIP	47K	5%	1/10W
R349	1-216-817-11	METAL CHIP	470	5%	1/10W
R350	1-216-841-11	METAL CHIP	47K	5%	1/10W
R351	1-216-817-11	METAL CHIP	470	5%	1/10W
R352	1-216-841-11	METAL CHIP	47K	5%	1/10W
R353	1-216-817-11	METAL CHIP	470	5%	1/10W
R354	1-216-841-11	METAL CHIP	47K	5%	1/10W
R355	1-216-817-11	METAL CHIP	470	5%	1/10W
R356	1-216-817-11	METAL CHIP	470	5%	1/10W
R357	1-216-841-11	METAL CHIP	47K	5%	1/10W
R358	1-216-841-11	METAL CHIP	47K	5%	1/10W
R359	1-216-817-11	METAL CHIP	470	5%	1/10W
R360	1-216-817-11	METAL CHIP	470	5%	1/10W
R361	1-216-841-11	METAL CHIP	47K	5%	1/10W
R362	1-216-837-11	METAL CHIP	22K	5%	1/10W
R363	1-216-837-11	METAL CHIP	22K	5%	1/10W
R364	1-216-837-11	METAL CHIP	22K	5%	1/10W
R365	1-216-837-11	METAL CHIP	22K	5%	1/10W
R366	1-216-837-11	METAL CHIP	22K	5%	1/10W
R367	1-216-837-11	METAL CHIP	22K	5%	1/10W
R368	1-216-837-11	METAL CHIP	22K	5%	1/10W
R369	1-216-821-11	METAL CHIP	1K	5%	1/10W
R370	1-216-821-11	METAL CHIP	1K	5%	1/10W
R371	1-216-821-11	METAL CHIP	1K	5%	1/10W
R372	1-216-821-11	METAL CHIP	1K	5%	1/10W
R373	1-216-821-11	METAL CHIP	1K	5%	1/10W
R374	1-216-821-11	METAL CHIP	1K	5%	1/10W
R375	1-216-821-11	METAL CHIP	1K	5%	1/10W
R376	1-216-837-11	METAL CHIP	22K	5%	1/10W
R377	1-216-837-11	METAL CHIP	22K	5%	1/10W
R378	1-216-841-11	METAL CHIP	47K	5%	1/10W
R379	1-216-845-11	METAL CHIP	100K	5%	1/10W
R380	1-216-817-11	METAL CHIP	470	5%	1/10W
R381	1-216-833-11	METAL CHIP	10K	5%	1/10W
R382	1-216-833-11	METAL CHIP	10K	5%	1/10W
R383	1-216-833-11	METAL CHIP	10K	5%	1/10W
R384	1-216-833-11	METAL CHIP	10K	5%	1/10W
R385	1-216-821-11	METAL CHIP	1K	5%	1/10W
R386	1-216-821-11	METAL CHIP	1K	5%	1/10W
R387	1-216-821-11	METAL CHIP	1K	5%	1/10W
R388	1-216-864-11	SHORT CHIP	0 (US, CND)		
R389	1-216-829-11	METAL CHIP	4.7K	5%	1/10W (EC77: EXCEPT US, CND)
R389	1-216-833-11	METAL CHIP	10K	5%	1/10W (EC77: US, CND/GX99)
R389	1-216-837-11	METAL CHIP	22K	5%	1/10W (EC55: EXCEPT US)
R390	1-216-821-11	METAL CHIP	1K	5%	1/10W (EC55: US/EC77: US, CND)
R390	1-216-827-11	METAL CHIP	3.3K	5%	1/10W (GX99)
R390	1-216-841-11	METAL CHIP	47K	5%	1/10W (EC77: EXCEPT US, CND)
R390	1-216-845-11	METAL CHIP	100K	5%	1/10W (EC55: EXCEPT US)
R392	1-216-833-11	METAL CHIP	10K	5%	1/10W (EXCEPT AEP, UK)
R393	1-216-821-11	METAL CHIP	1K	5%	1/10W (AEP, UK, RU)
R393	1-216-825-11	METAL CHIP	2.2K	5%	1/10W (MX)
R393	1-216-833-11	METAL CHIP	10K	5%	1/10W (E3)
R393	1-216-840-11	METAL CHIP	39K	5%	1/10W (E2)
R393	1-216-845-11	METAL CHIP	100K	5%	1/10W (E51)
R396	1-216-864-11	SHORT CHIP	0		
R397	1-216-817-11	METAL CHIP	470	5%	1/10W
R399	1-216-833-11	METAL CHIP	10K	5%	1/10W
R400	1-216-864-11	SHORT CHIP	0		
R401	1-216-864-11	SHORT CHIP	0		
R402	1-216-845-11	METAL CHIP	100K	5%	1/10W
R405	1-216-821-11	METAL CHIP	1K	5%	1/10W
R406	1-216-825-11	METAL CHIP	2.2K	5%	1/10W
R412	1-216-821-11	METAL CHIP	1K	5%	1/10W
R413	1-216-825-11	METAL CHIP	2.2K	5%	1/10W
R419	1-216-837-11	METAL CHIP	22K	5%	1/10W
R420	1-216-845-11	METAL CHIP	100K	5%	1/10W
R421	1-216-833-11	METAL CHIP	10K	5%	1/10W
		< SWITCH >			
S301	1-786-417-11	ENCODER, ROTARY (VOLUME)			
		< SWITCH >			
SW303	1-762-875-21	SWITCH, KEYBOARD (FUNCTION)			
SW304	1-762-875-21	SWITCH, KEYBOARD (CD ►II)			
SW305	1-762-875-21	SWITCH, KEYBOARD (TUNER/BAND)			
SW311	1-762-875-21	SWITCH, KEYBOARD (■)			
SW312	1-762-875-21	SWITCH, KEYBOARD (TUNING – I◁◁◀◀)			
SW313	1-762-875-21	SWITCH, KEYBOARD (TUNING + ▶▶▷▷I)			
		< VIBRATOR >			
X301	1-760-252-12	VIBRATOR, CRYSTAL (32.768kHz)			
X302	1-795-058-21	VIBRATOR, CERAMIC (5MHz)			

****

PT BOARD (EXCEPT EC55: US, CND)
****

		< CAPACITOR >			
C051	1-165-621-91	CERAMIC CHIP	0.1uF		50V
		< CONNECTOR >			
CN051	1-819-972-11	HOLDER, CABLE 8P			
		< DIODE >			
D051	6-500-334-01	DIODE MC2836-T112-1			
D052	6-500-335-01	DIODE MC2838-T112-1			
D055	6-500-335-01	DIODE MC2838-T112-1			

Ref. No.	Part No.	Description	Remark
		< TRANSFORMER >	
⚠PT001	1-443-846-11	TRANSFORMER, POWER (EC77: US, CND/GX99)	
⚠PT001	1-443-912-11	TRANSFORMER, POWER (AEP, UK, RU)	
⚠PT001	1-445-105-11	TRANSFORMER, POWER (E2, E3, E51, MX)	
		< RELAY >	
⚠RY001	1-755-334-11	RELAY, AC POWER (EC55: AEP, UK, RU/EC77: US, CND, AEP, RU/GX99)	
⚠RY002	1-755-496-11	RELAY (E2, E3, E51, MX)	
		< SWITCH >	
⚠S001	1-786-408-11	SELECTOR, VOLTAGE (SWS-2301) (VOLTAGE SELECTOR)(E2, E3, E51)	
**********			
		PT (U) BOARD (EC55: US, CND) **********	
		< CAPACITOR >	
C051	1-165-621-91	CERAMIC CHIP 0.1uF	50V
		< CONNECTOR >	
CN051	1-819-972-11	HOLDER, CABLE 8P	
		< DIODE >	
D051	6-500-334-01	DIODE MC2836-T112-1	
D052	6-500-335-01	DIODE MC2838-T112-1	
D055	6-500-335-01	DIODE MC2838-T112-1	
		< TRANSFORMER >	
⚠PT001	1-443-846-11	TRANSFORMER, POWER	
		< RELAY >	
⚠RY001	1-755-334-11	RELAY, AC POWER	
**********			
		REG BOARD *********	
		< CAPACITOR >	
C629	1-100-566-91	CERAMIC CHIP 0.1uF 10%	25V
		< IC >	
IC601	8-759-701-59	IC NJM78M09FA	
**********			
		MISCELLANEOUS **********	
6	1-787-319-12	FAN, DC (EC55/EC77: AEP, RU, E2, E3, E51, MX, AR, AUS)	
6	1-787-344-11	FAN, DC (EC77: US, CND/GX99)	
59	1-833-800-21	CABLE, FLEXIBLE FLAT (27 CORE)	
64	1-832-053-21	CABLE, FLEXIBLE FLAT (9 CORE)	
101	1-832-838-21	CABLE, FLEXIBLE FLAT (13 CORE)	
103	1-834-181-21	CABLE, FLEXIBLE FLAT (21 CORE)	
107	1-500-868-11	CORE, FERRITE	

Ref. No.	Part No.	Description	Remark
⚠108	1-775-790-81	CORD, POWER (AUS)	
⚠108	1-790-757-52	CORD, POWER (US, CND)	
⚠108	1-831-370-11	CORD, POWER (AEP, RU, E2, E3, E51)	
⚠108	1-832-377-11	CORD, POWER (MX)	
⚠108	1-834-172-11	CORD, POWER (AR)	
151	1-832-838-21	CABLE, FLEXIBLE FLAT (13 CORE)	
153	1-834-181-21	CABLE, FLEXIBLE FLAT (21 CORE)	
157	1-500-868-11	CORE, FERRITE	
⚠158	1-769-079-51	CORD, POWER (KR)	
⚠158	1-775-790-81	CORD, POWER (AUS)	
⚠158	1-790-757-52	CORD, POWER (US, CND)	
⚠158	1-830-891-11	CORD, POWER (UK)	
⚠158	1-831-370-11	CORD, POWER (AEP, RU, E2, E51, SP)	
⚠158	1-832-377-11	CORD, POWER (MX)	
⚠158	1-834-172-11	CORD, POWER (AR)	
208	1-797-575-11	DECK, MECHANICAL (EXCEPT US,CND)	
214	1-833-801-21	CABLE, FLEXIBLE FLAT (9 CORE) (EXCEPT US,CND)	
⚠505	A-4735-357-A	BASE ASSY, OP (KSM-213)	
506	1-832-404-21	CABLE, FLEXIBLE FLAT (16 CORE)	
507	1-797-193-12	MECHANICAL, CD (DLM3A23-11)	
⚠TP002	1-445-113-11	TRANSFORMER, POWER (EC77: US, CND/GX99)	
⚠TP002	1-445-118-11	TRANSFORMER, POWER (EC77: AEP, RU)	
⚠TP002	1-445-119-11	TRANSFORMER, POWER (EC77: E2, E3, E51, AR, AUS)	
⚠TP002	1-445-120-11	TRANSFORMER, POWER (EC77: MX)	
⚠TP003	1-443-911-11	TRANSFORMER, POWER (EC55: E2, E51, KR, AR, SP, AUS)	
⚠TP003	1-443-995-11	TRANSFORMER, POWER (EC55: MX)	
⚠TP003	1-445-115-11	TRANSFORMER, POWER (EC55: US, CND)	
⚠TP003	1-445-117-11	TRANSFORMER, POWER (EC55: AEP, UK, RU)	
S201	1-771-853-11	SWITCH, DETECTION (LIMIT)	

MEMO

HCD-EC55/EC77/GX99

SONY

SERVICE MANUAL

Ver. 1.2 2007.07

US Model
Canadian Model
HCD-EC55/EC77/GX99
AEP Model
HCD-EC55/EC77
UK Model
HCD-EC55
E Model
HCD-EC55/EC77
Australian Model
HCD-EC55/EC77

SUPPLEMENT-1

Subject: Board changed to suffix -13, -14 from suffix -12.

Parts number of printed wiring board changed to suffix-13, -14 from suffix-12.
It has any difference between suffix-12 and suffix-13, -14.
This supplement-1 describes printed wiring boards, schematic diagrams and electrical parts list about printed wiring boards suffix-13, -14.
Refer to original service manual (9-887-532-0□) for other information.

- **How to distinguish**

Location of parts number on changed wiring board

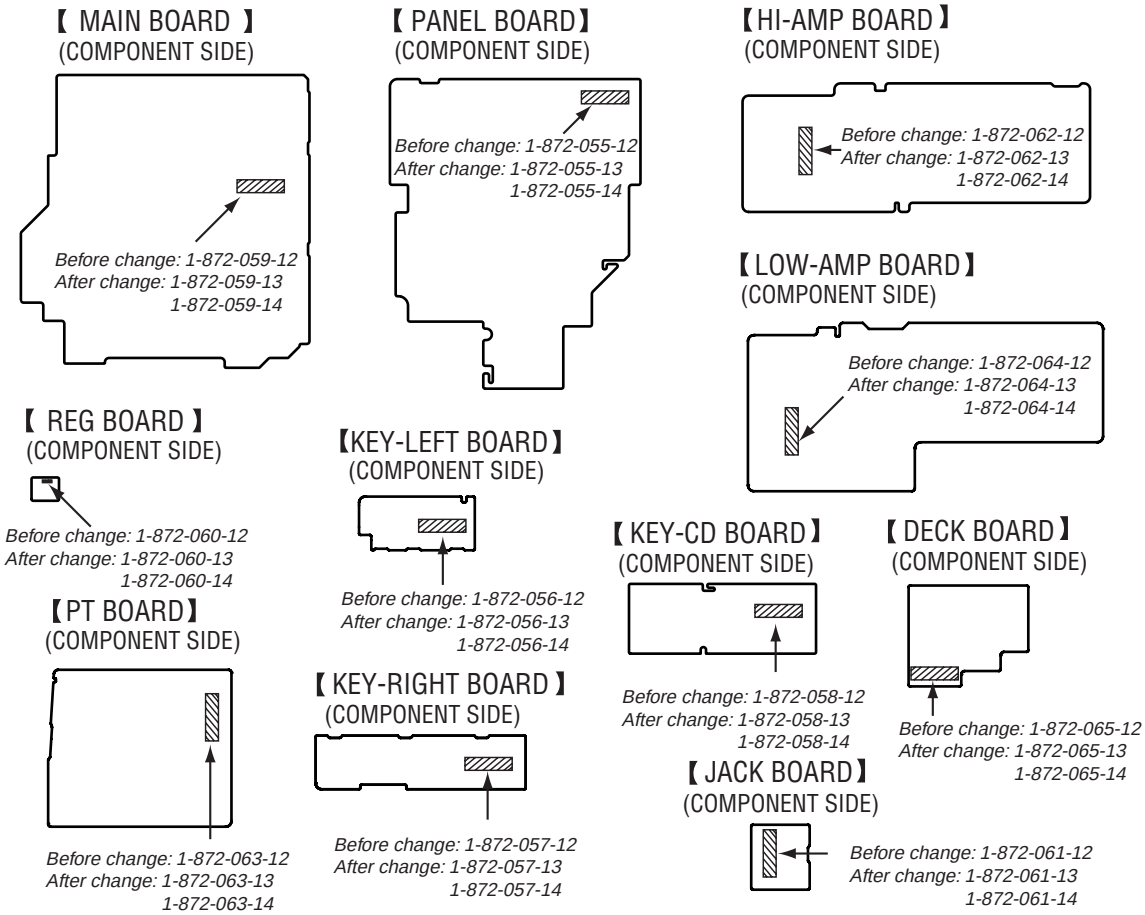

9-887-532-81

DIAGRAMS

THIS NOTE IS COMMON FOR PRINTED WIRING BOARDS AND SCHEMATIC DIAGRAMS.
(In addition to this, the necessary note is printed in each block.)

Note on Schematic Diagram:

- All capacitors are in µF unless otherwise noted. (p: pF) 50 WV or less are not indicated except for electrolytics and tantalums.
- All resistors are in Ω and 1/4 W or less unless otherwise specified.
- △ : internal component.
- : nonflammable resistor.
- : fusible resistor.
- : panel designation.

Note:	Note:
The components identified by mark ⚠ or dotted line with mark ⚠ are critical for safety. Replace only with part number specified.	Les composants identifiés par une marque ⚠ sont critiques pour la sécurité. Ne les remplacer que par une piéce portant le numéro spécifié.

- : adjustment for repair.
- : B+ Line.
- : B– Line.
- Voltages are taken with a VOM (Input impedance 10 MΩ). Voltage variations may be noted due to normal production tolerances.
- Waveforms are taken with a oscilloscope. Voltage variations may be noted due to normal production tolerances.
  – HI-AMP/LOW-AMP Section –
  No mark: CD STOP
  – DECK Section –
  No mark: TAPE PLAY or TAPE REC
  – Other Section –
  No mark: CD PLAY
- Circled numbers refer to waveforms.
- Signal path.
  : TUNER (FM)
  : TUNER (AM)
  : CD
  : AUDIO
  : PB (TAPE)
  : REC (TAPE)
- Abbreviation

AR	: Argentine model
AUS	: Australian model
CND	: Canadian model
E2	: 120 V AC area in E model
E3	: 240 V AC area in E model
E51	: Chilean and Peruvian models
KR	: Korean model
MX	: Mexican model
RU	: Russian model
SP	: Singapore model

Note on Printed Wiring Boards:

- : parts extracted from the component side.
- : parts extracted from the conductor side.
- △ : internal component.
- : Pattern from the side which enables seeing.

Caution:	
Pattern face side: (Side B)	Parts on the pattern face side seen from the pattern face are indicated.
Parts face side: (Side A)	Parts on the parts face side seen from the parts face are indicated.

- Indication of transistor.

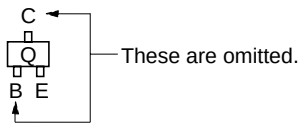

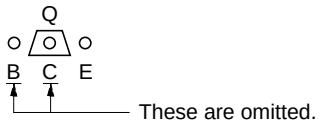

- **Waveforms**

– MAIN Board –

① **IC801 ⑳ (XOUT)**

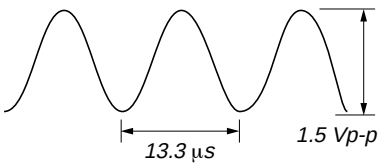

500 mV/DIV, 4 µs/DIV

– PANEL Board –

① **IC301 ⑬ (X0A)**

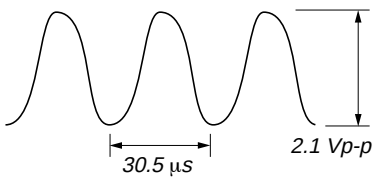

500 mV/DIV, 10 µs/DIV

② **IC301 ⑨③ (X0)**

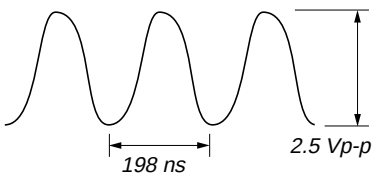

1 V/DIV, 100 ns/DIV

PRINTED WIRING BOARDS — MAIN SECTION — • :Uses unleaded solder.

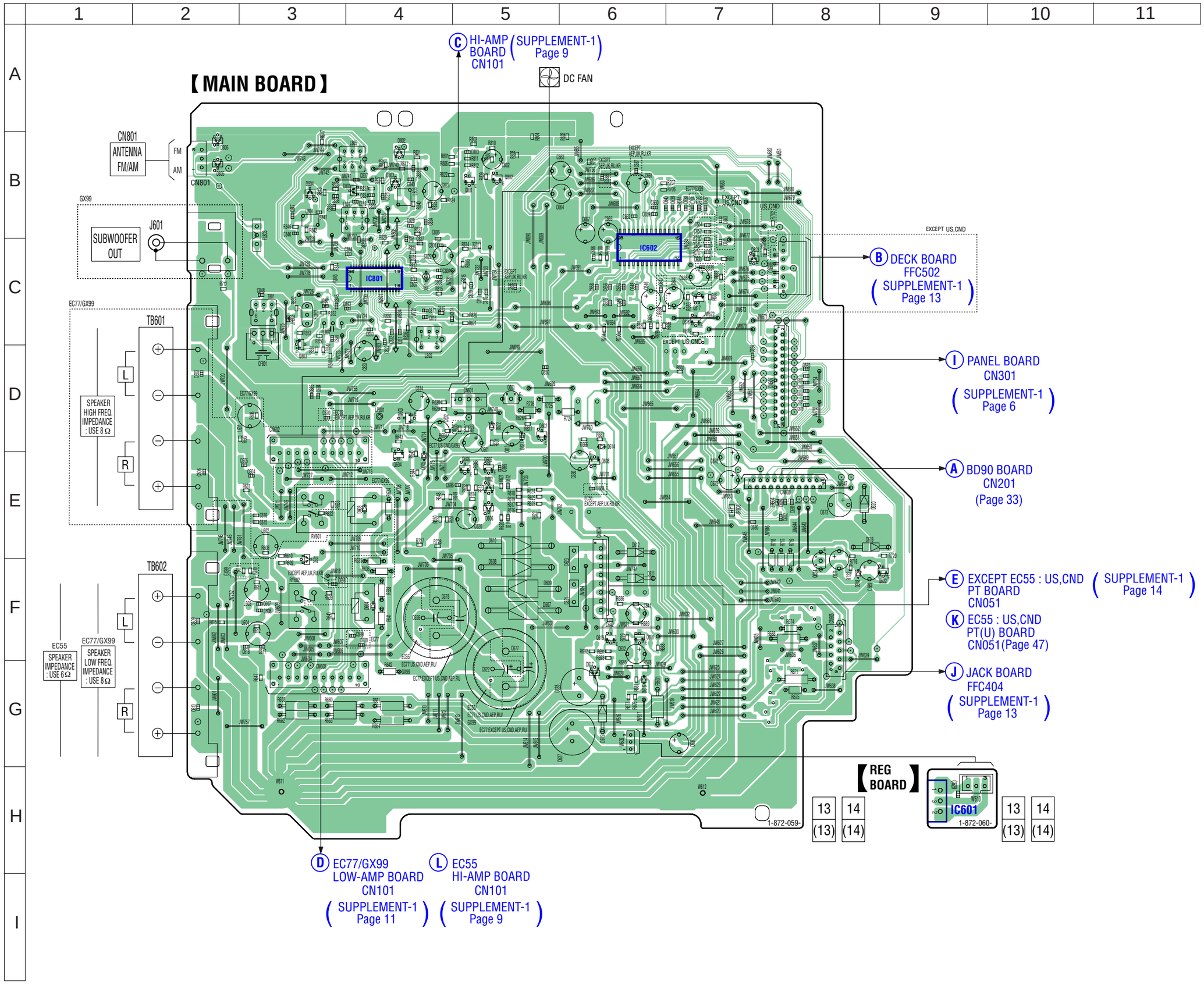

- **Semiconductor Location**

Ref. No.	Location
D601	E-3
D602	E-5
D603	E-3
D604	F-4
D605	E-4
D606	E-5
D607	F-5
D608	E-5
D609	F-5
D610	E-5
D611	F-6
D612	E-6
D614	D-6
D615	G-6
D616	C-7
D617	C-7
D618	E-8
D619	E-8
D620	E-8
D621	D-5
D622	D-5
D623	C-7
D801	B-3
D802	B-4
D803	B-4
D804	B-3
D805	B-2
D806	B-2
IC601	H-9
IC602	B-6
IC801	C-4
Q601	D-5
Q602	D-5
Q603	D-4
Q604	E-4
Q605	E-5
Q606	E-5
Q608	E-6
Q616	C-7
Q617	C-7
Q618	F-6
Q619	F-6
Q622	F-8
Q624	E-8
Q801	B-5
Q802	B-5
Q803	D-3

SCHEMATIC DIAGRAM — MAIN SECTION (1/2) —

• See page 2 for Waveform.

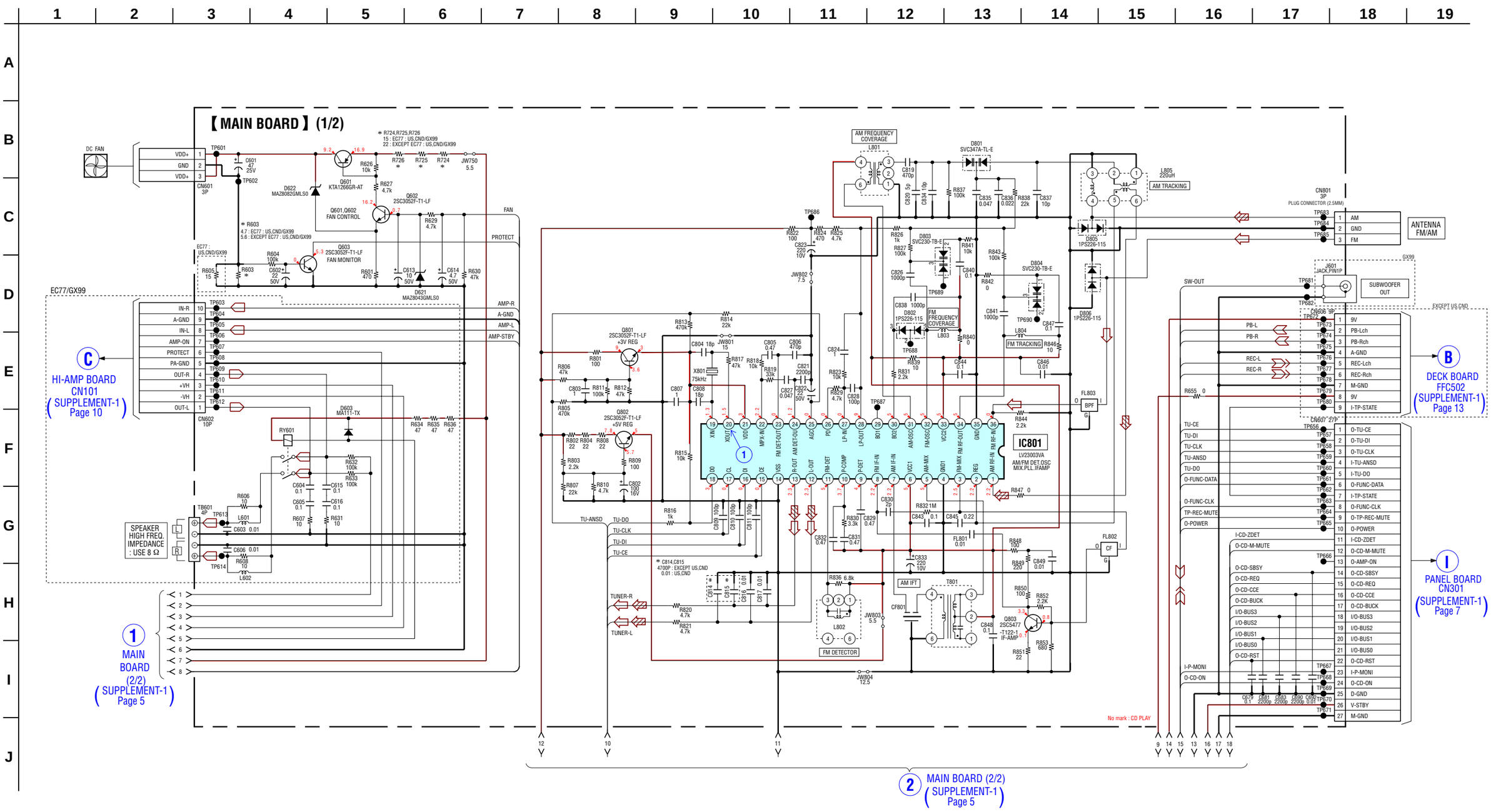

SCHEMATIC DIAGRAM — MAIN SECTION (2/2) —

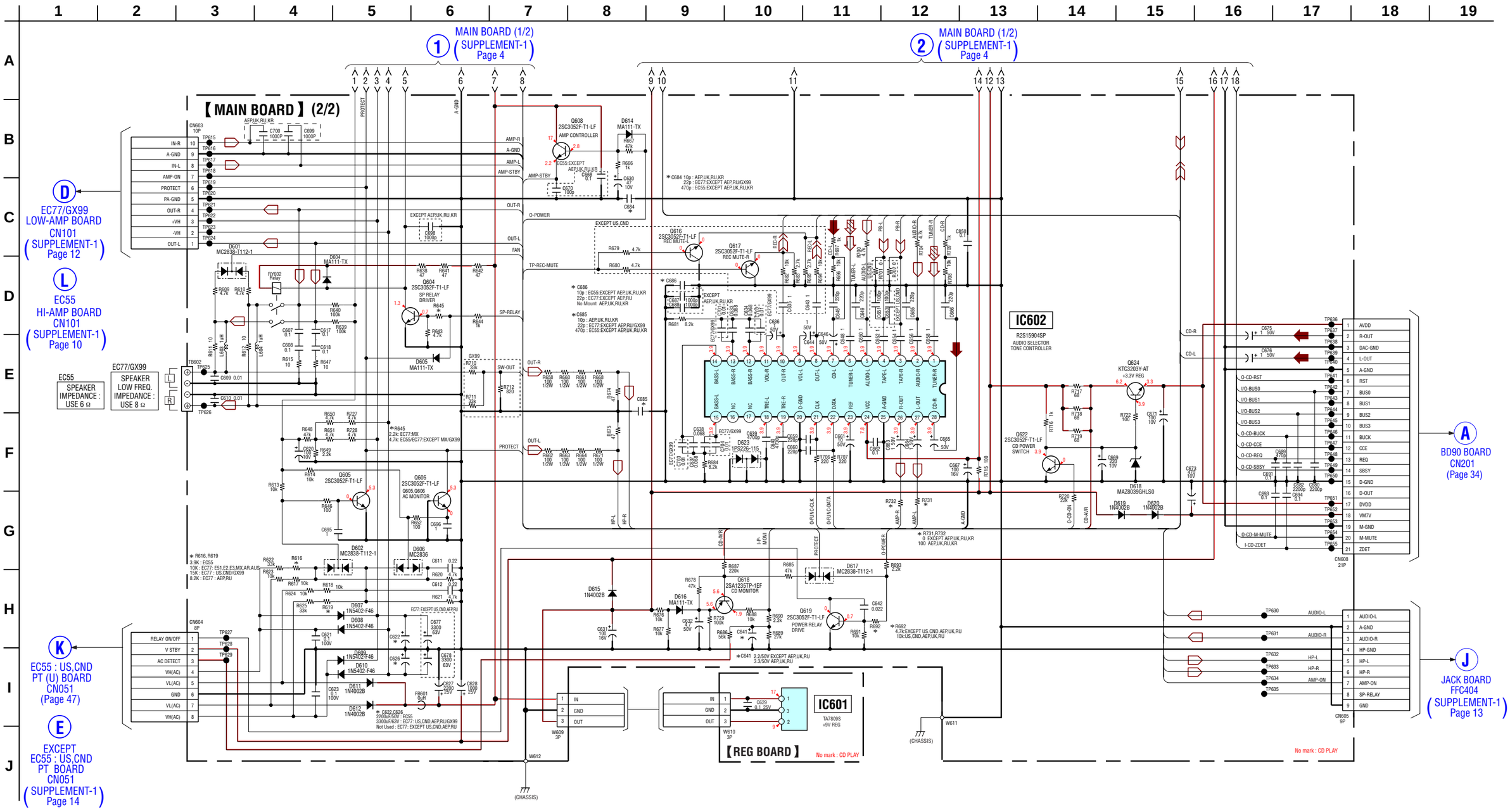

PRINTED WIRING BOARD — PANEL BOARD —

• :Uses unleaded solder.

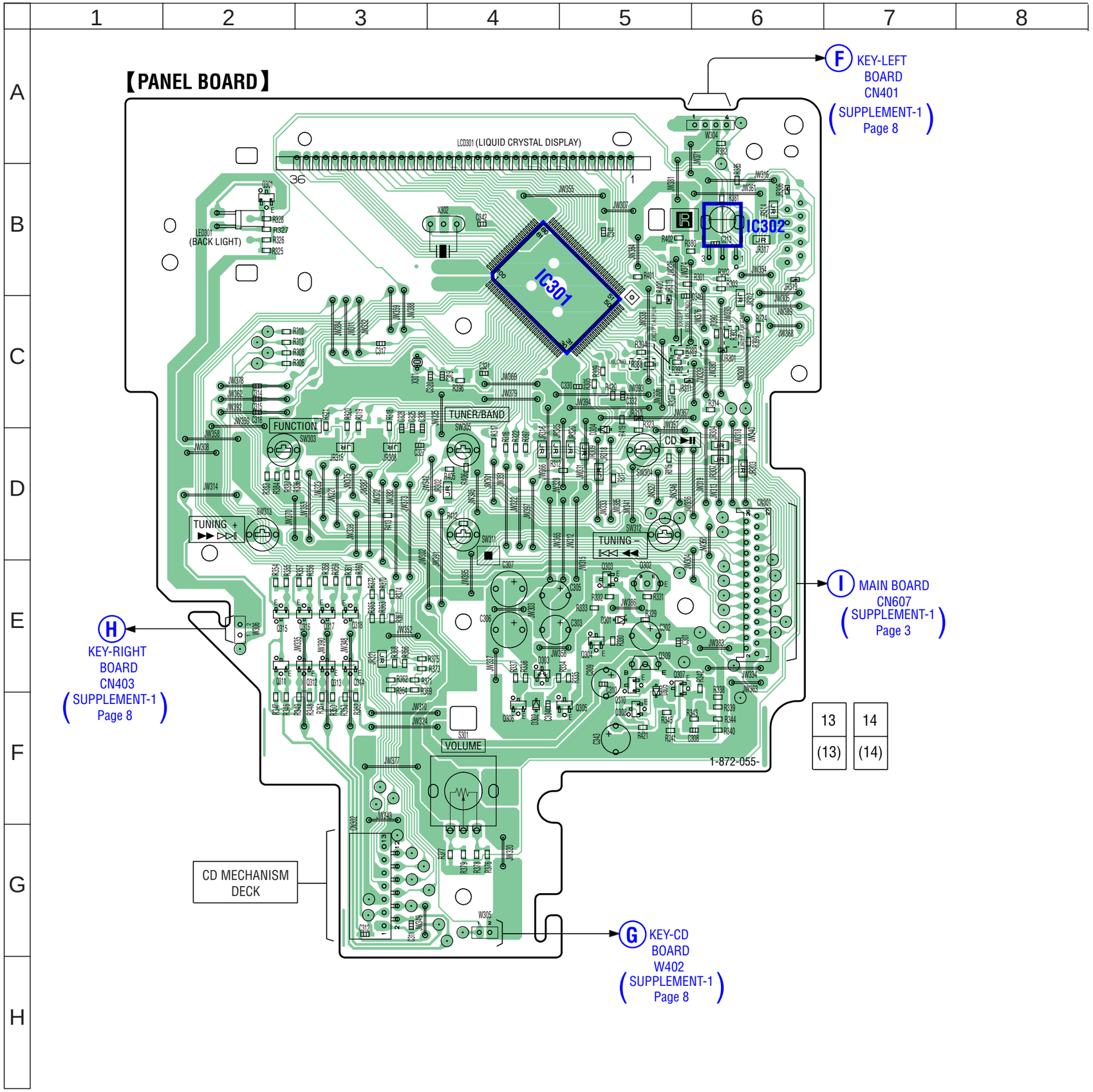

• **Semiconductor Location**

Ref. No.	Location
D301	E-5
D302	F-4
D303	E-4
D304	C-5
D305	E-5
LED301	B-2
IC301	B-4
IC302	B-6
Q301	B-2
Q302	D-5
Q303	D-5
Q304	E-5
Q305	E-5
Q306	F-4
Q307	E-5
Q308	F-5
Q309	E-5
Q310	E-5
Q311	E-2
Q312	E-3
Q313	E-3
Q314	E-3
Q315	E-2
Q316	E-3
Q317	E-3
Q318	E-3

SCHEMATIC DIAGRAM — PANEL BOARD —

• See page 2 for Waveforms.

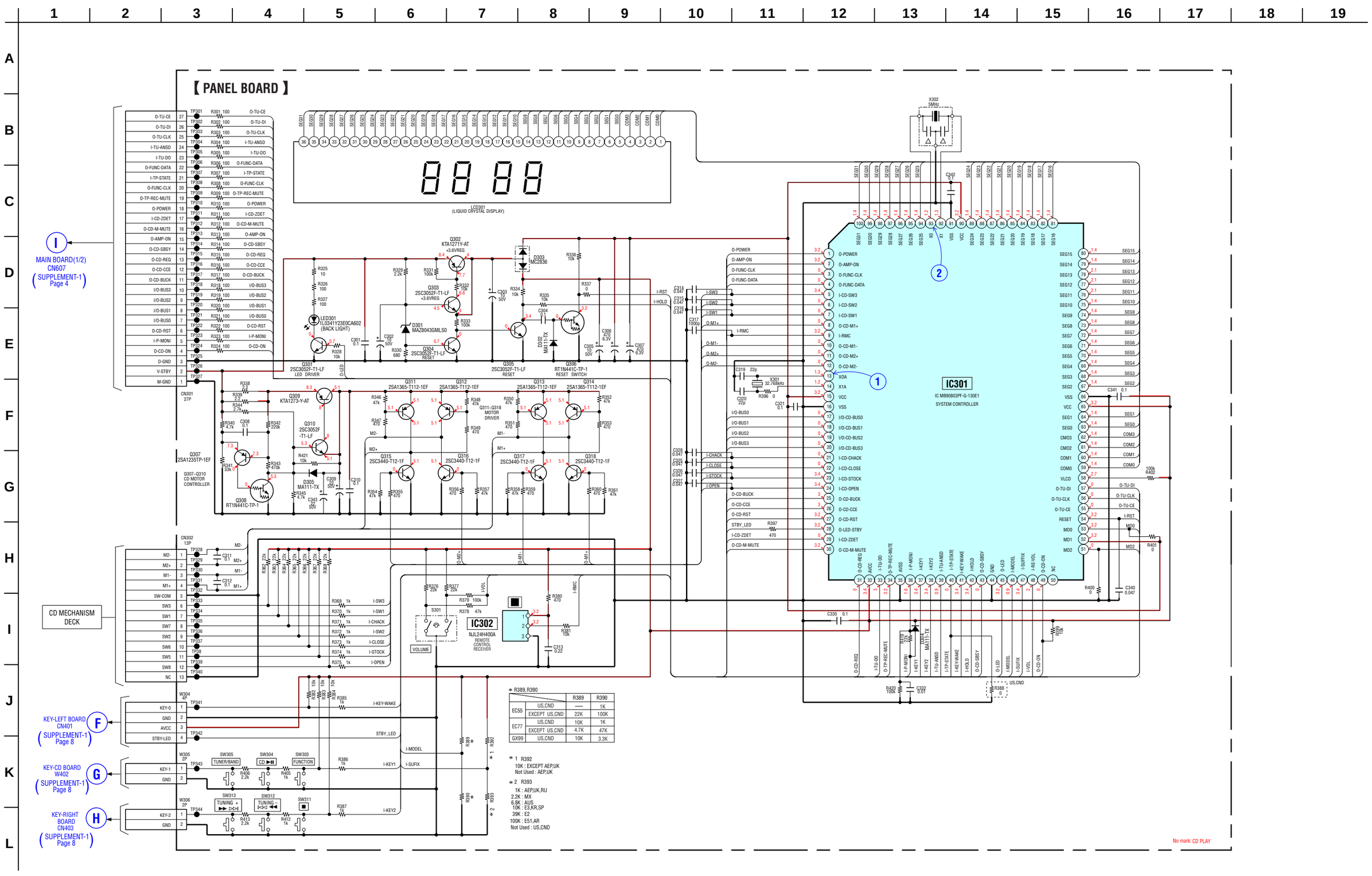

		R389	R390
EC55	US,CND	—	1K
	EXCEPT US,CND	22K	100K
EC77	US,CND	10K	1K
	EXCEPT US,CND	4.7K	47K
GX99	US,CND	10K	3.3K

* 1 R392
10K : EXCEPT AEP,UK
Not Used : AEP,UK

* 2 R393
1K : AEP,UK,RU
2.2K : MX
6.8K : AUS
10K : E3,KR,SP
39K : E2
100K : E51,AR
Not Used : US,CND

PRINTED WIRING BOARDS — KEY SECTION —

• :Uses unleaded solder.

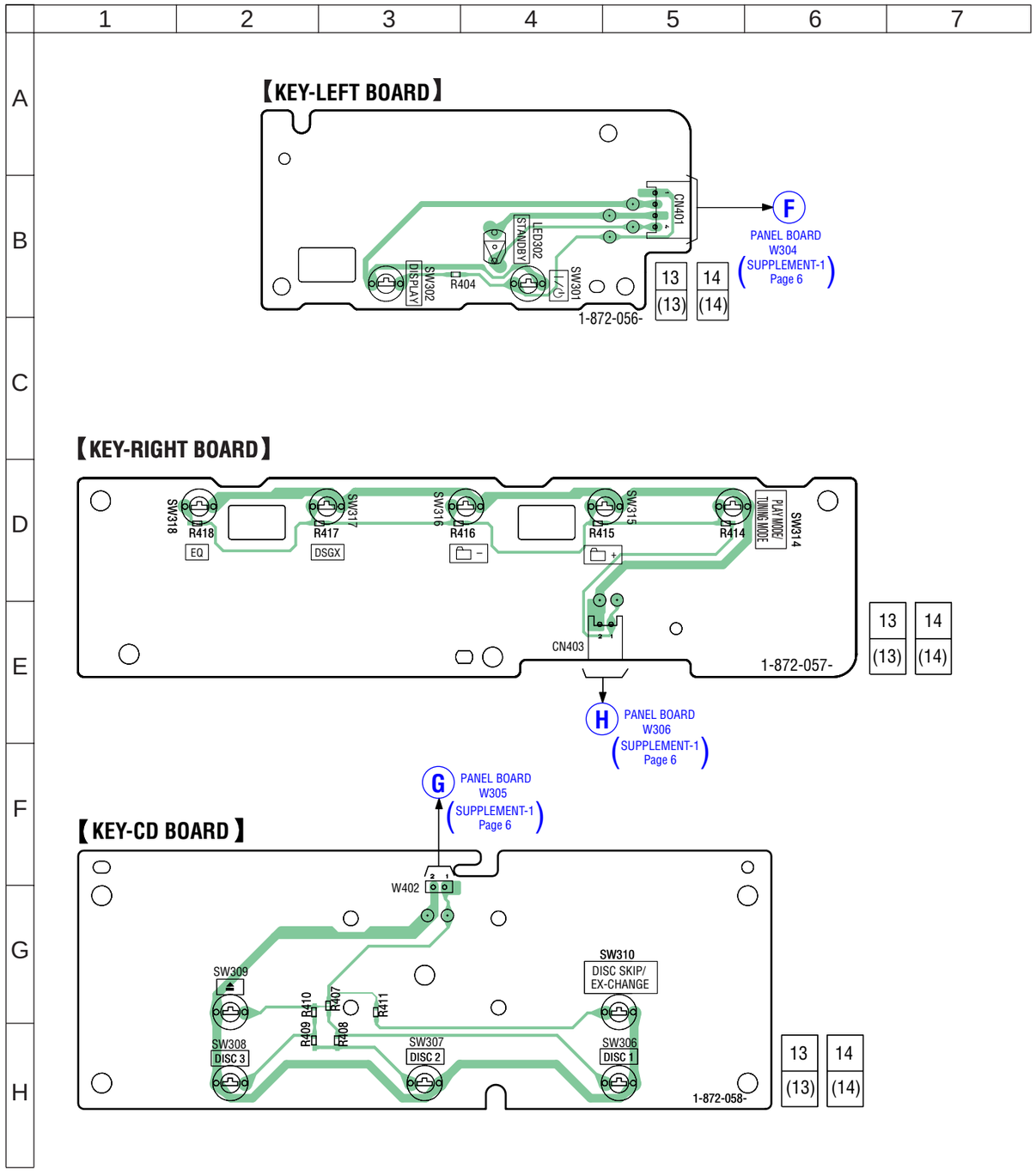

SCHEMATIC DIAGRAM — KEY SECTION —

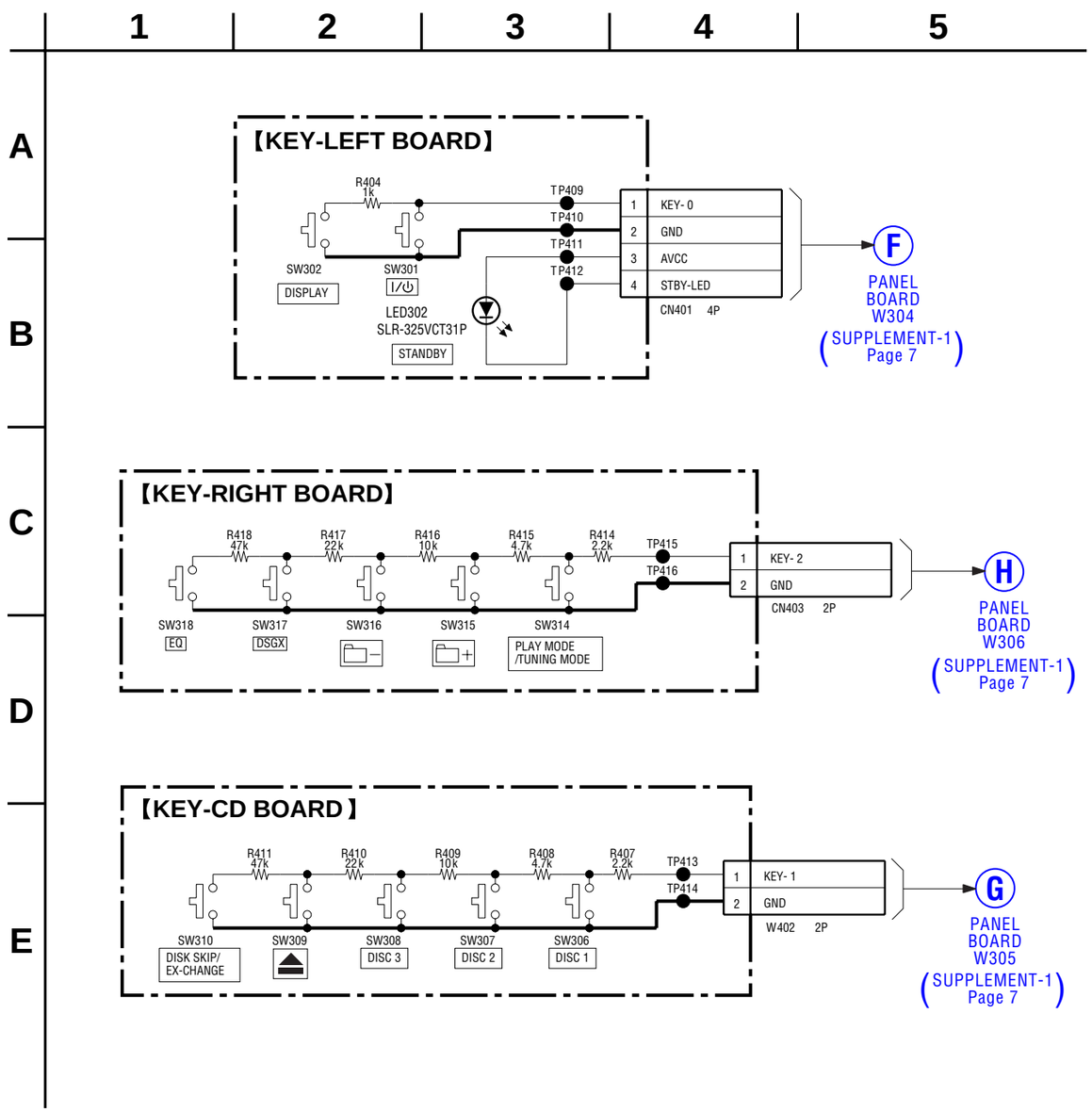

PRINTED WIRING BOARD — HI-AMP BOARD — • :Uses unleaded solder.

【HI-AMP BOARD】

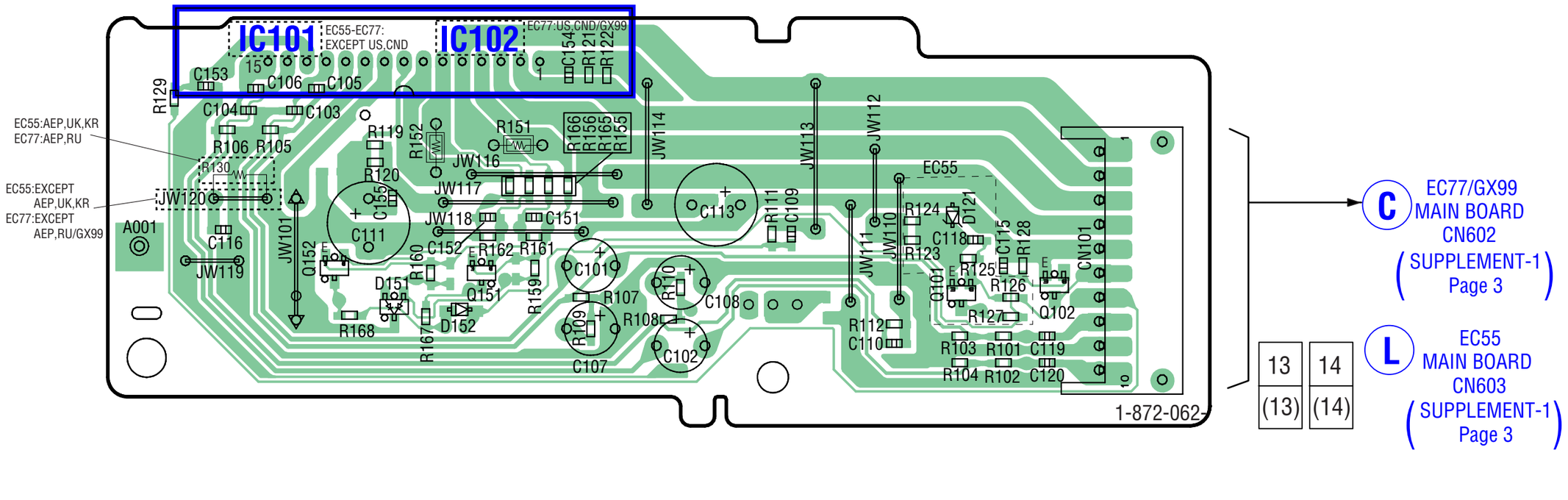

- **Semiconductor Location**

Ref. No.	Location
D121	C-6
D151	D-3
D152	C-3
IC101	B-2
IC102	B-3
Q101	C-6
Q102	C-7
Q151	C-3
Q152	C-2

SCHEMATIC DIAGRAM — HI-AMP BOARD —

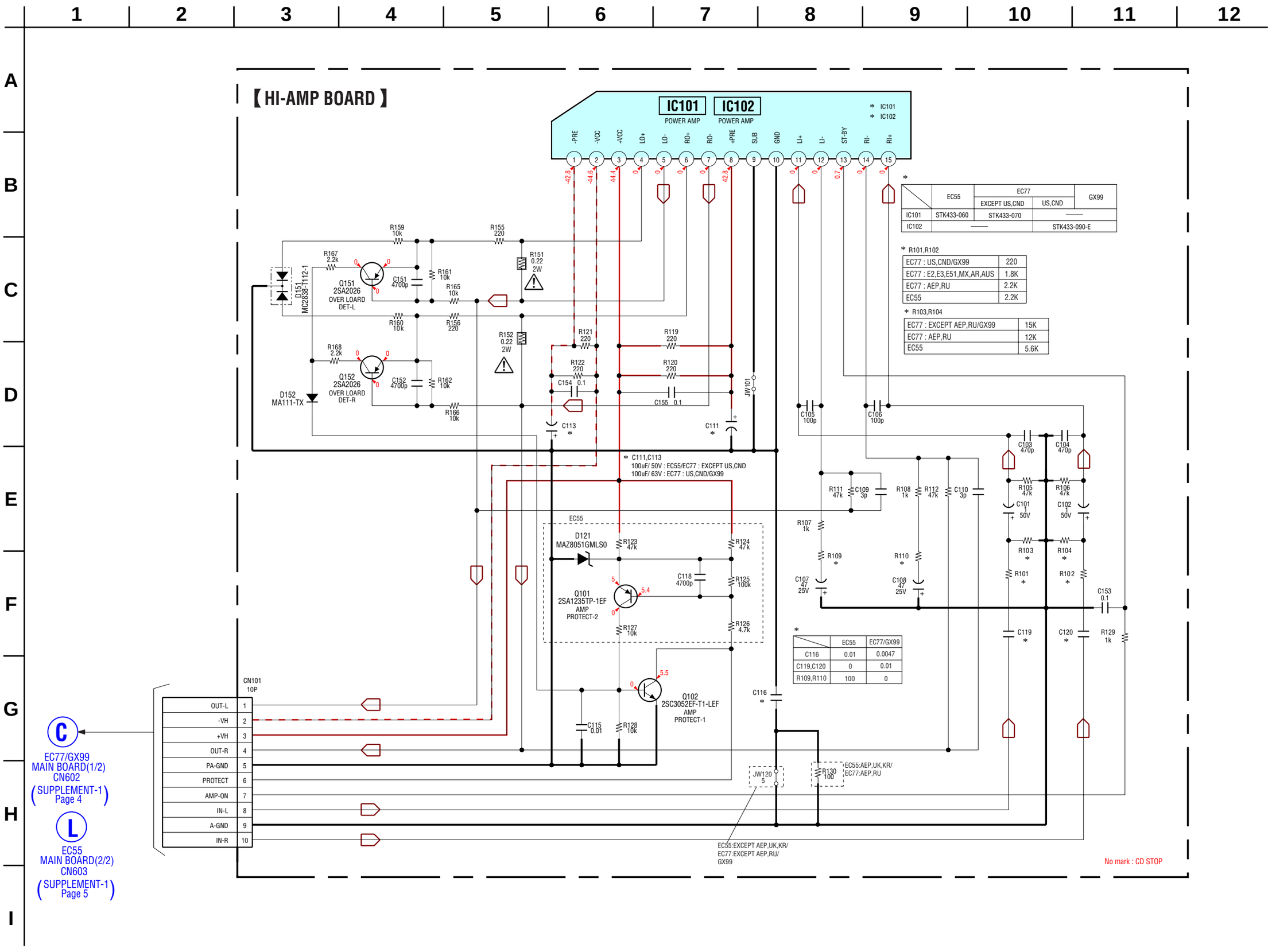

	EC55	EC77 EXCEPT US,CND	EC77 US,CND	GX99
IC101	STK433-060	STK433-070	——	
IC102	——		STK433-090-E	

* R101,R102

EC77 : US,CND/GX99	220
EC77 : E2,E3,E51,MX,AR,AUS	1.8K
EC77 : AEP,RU	2.2K
EC55	2.2K

* R103,R104

EC77 : EXCEPT AEP,RU/GX99	15K
EC77 : AEP,RU	12K
EC55	5.6K

	EC55	EC77/GX99
C116	0.01	0.0047
C119,C120	0	0.01
R109,R110	100	0

PRINTED WIRING BOARD — LOW-AMP BOARD (EC77/GX99) — • :Uses unleaded solder.

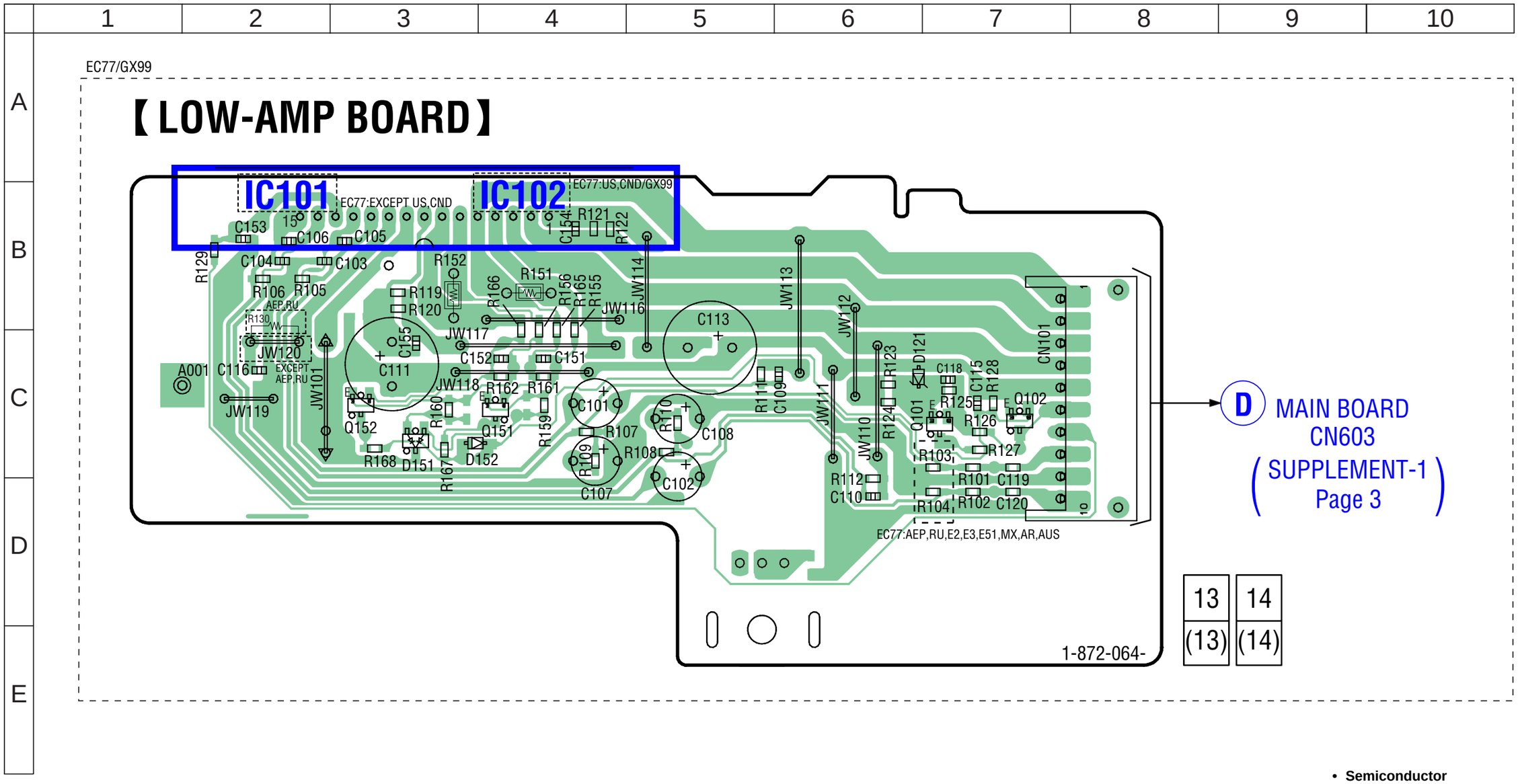

• **Semiconductor Location**

Ref. No.	Location
D151	C-3
D152	C-3
IC101	B-2
IC102	B-4
Q101	C-6
Q102	C-7
Q151	C-4
Q152	C-3

SCHEMATIC DIAGRAM — LOW-AMP BOARD (EC77/GX99) —

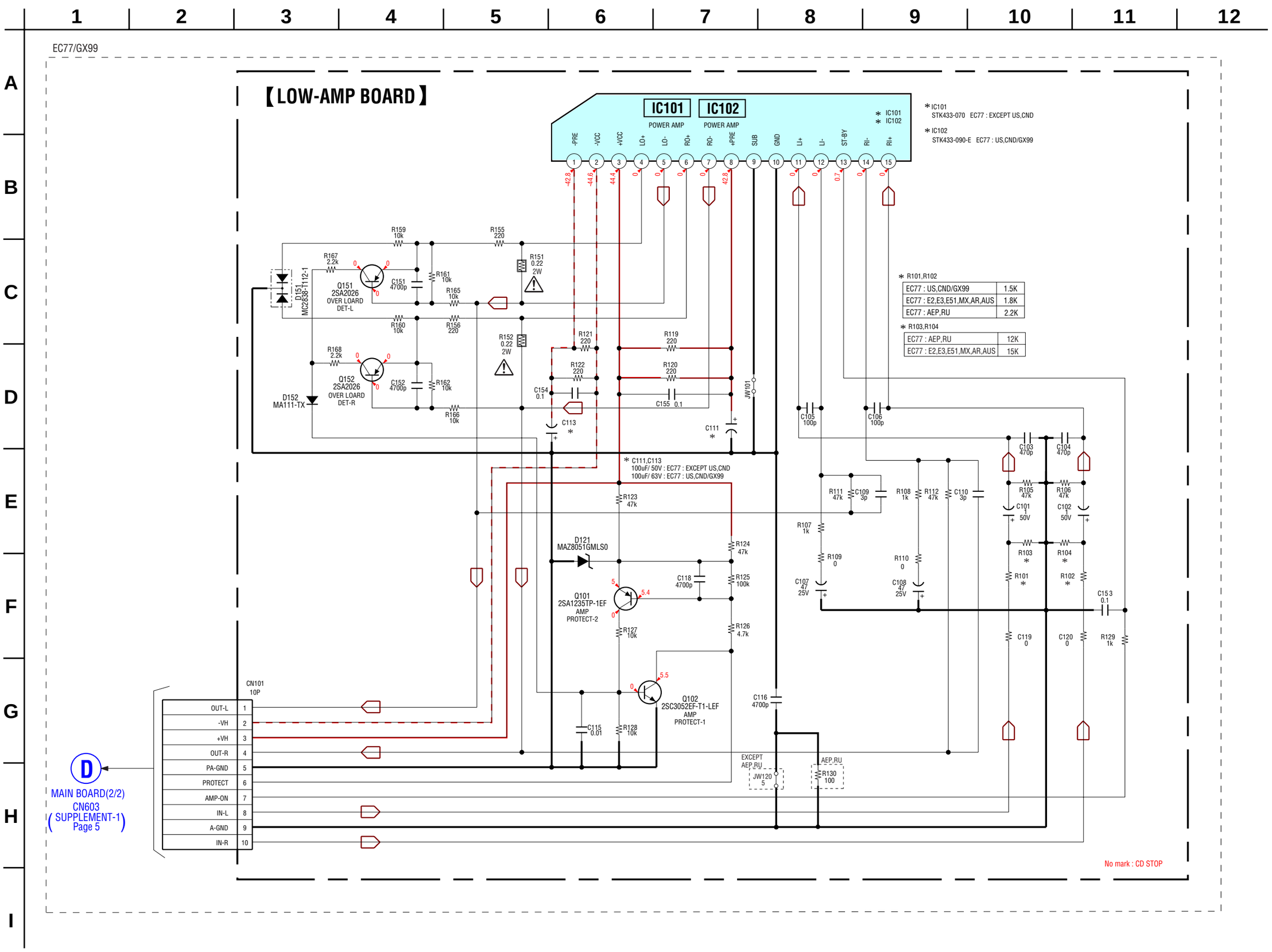

PRINTED WIRING BOARDS — DECK SECTION (EXCEPT US, CND) —

• :Uses unleaded solder.

EXCEPT US,CND

【DECK BOARD】

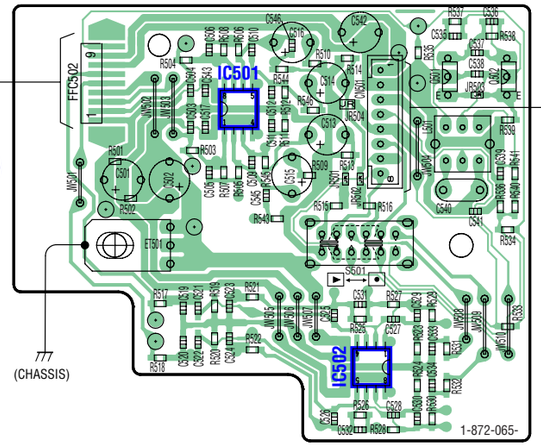

B
MAIN BOARD
CN606
(SUPPLEMENT-1
Page 3)

TAPE MECHANISM DECK

13	14
(13)	(14)

【JACK BOARD】

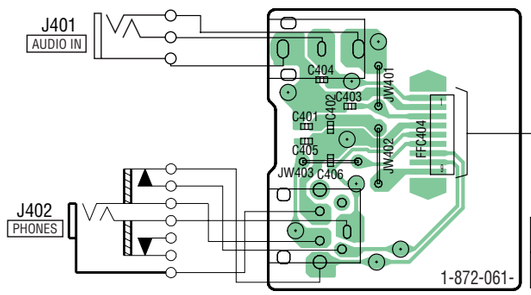

J
MAIN BOARD
CN605
(SUPPLEMENT-1
Page 3)

13	14
(13)	(14)

SCHEMATIC DIAGRAM — DECK SECTION (EXCEPT US, CND) —

EXCEPT US,CND

【DECK BOARD】

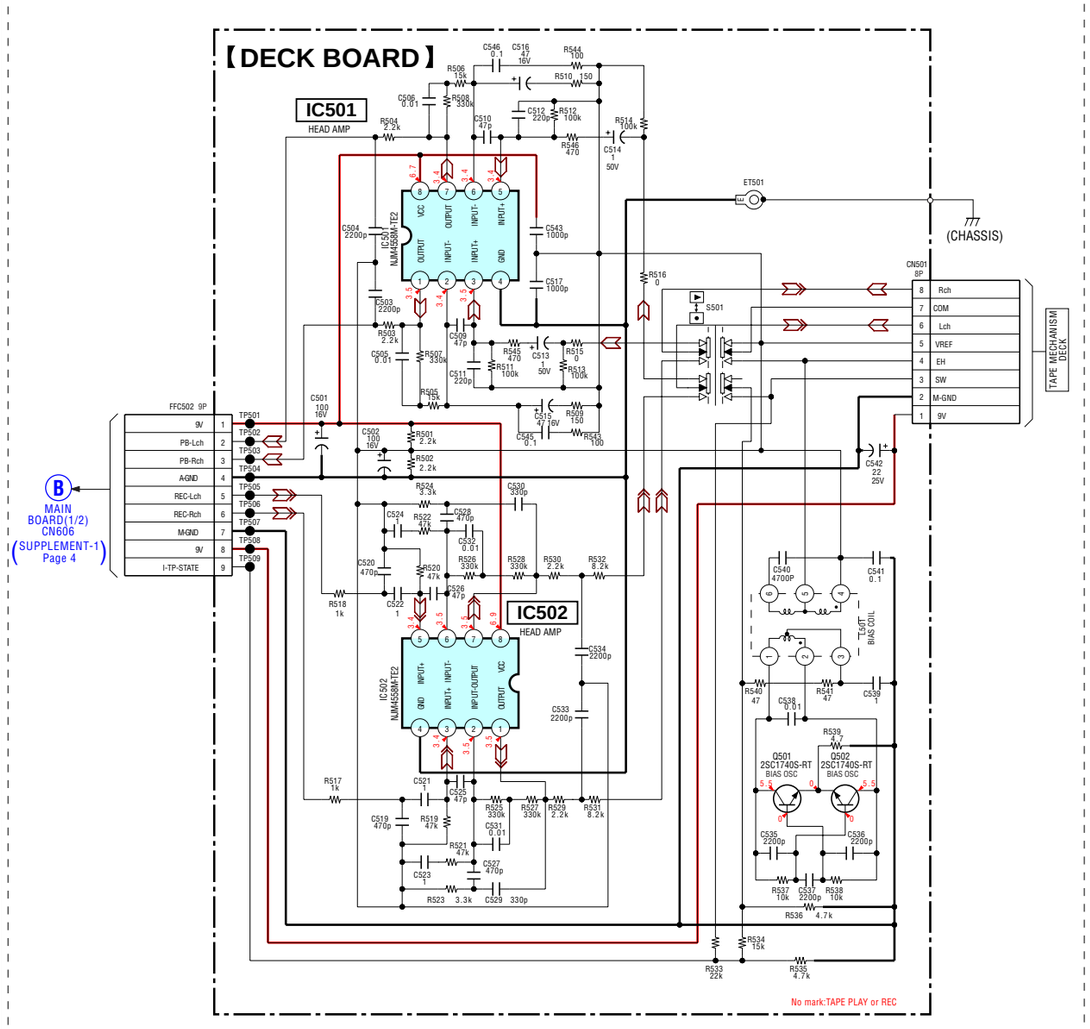

【JACK BOARD】

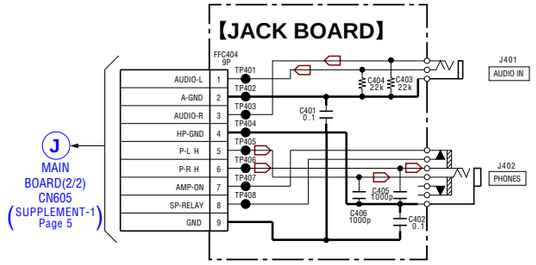

PRINTED WIRING BOARD — PT BOARD (EXCEPT EC55: US, CND) —

• :Uses unleaded solder.

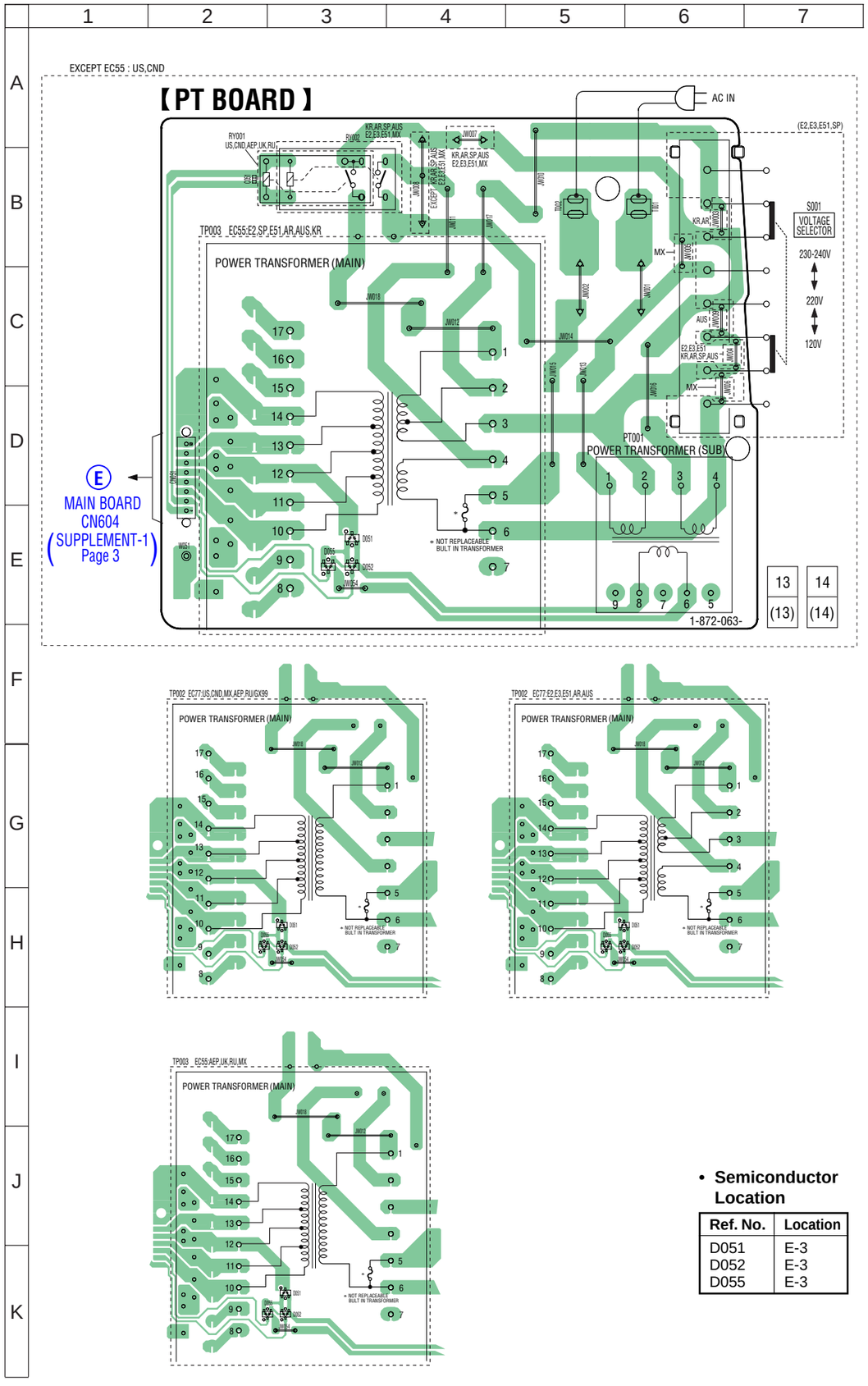

• **Semiconductor Location**

Ref. No.	Location
D051	E-3
D052	E-3
D055	E-3

SCHEMATIC DIAGRAM — PT BOARD (EXCEPT EC55: US, CND) —

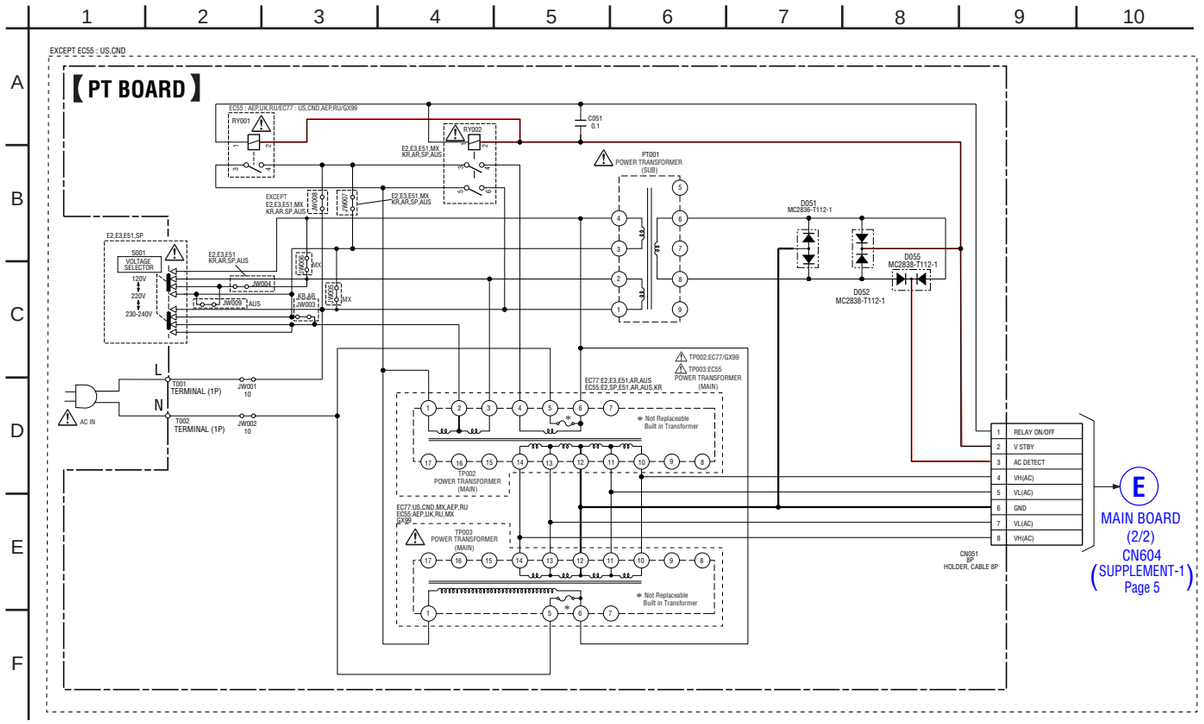

ELECTRICAL PARTS LIST

NOTE:

- Due to standardization, replacements in the parts list may be different from the parts specified in the diagrams or the components used on the set.
- -XX and -X mean standardized parts, so they may have some difference from the original one.
- RESISTORS
  All resistors are in ohms.
  METAL: Metal-film resistor.
  METAL OXIDE: Metal oxide-film resistor.
  F: nonflammable
- CAPACITORS
  uF: µF
- COILS
  uH: µH
- Items marked "*" are not stocked since they are seldom required for routine service. Some delay should be anticipated when ordering these items.
- SEMICONDUCTORS
  In each case, u: µ, for example:
  uA. . : µA. . uPA. . : µPA. .
  uPB. . : µPB. . uPC. . : µPC. .
  uPD. . : µPD. .
- Abbreviation
  AR : Argentine model
  AUS : Australian model
  CND : Canadian model
  E2 : 120V AC area in E model
  E3 : 240V AC area in E model
  E51 : Chilean and Peruvian model
  KR : Korean model
  MX : Mexican model
  RU : Russian model
  SP : Singapore model

When indicating parts by reference number, please include the board name.

The components identified by mark ⚠ or dotted line with mark ⚠ are critical for safety. Replace only with part number specified.

Les composants identifiés par une marque ⚠ sont critiques pour la sécurité.
Ne les remplacer que par une pièce portant le numéro spécifié.

Ref. No.	Part No.	Description			Remark
	A-1218-569-A	DECK BOARD, COMPLETE (EC77: EXCEPT US,CND)			
	A-1218-730-A	DECK BOARD, COMPLETE (EC55: EXCEPT US,CND)			
		**********			
		< CAPACITOR >			
C501	1-126-933-11	ELECT	100uF	20%	16V
C502	1-126-933-11	ELECT	100uF	20%	16V
C503	1-162-966-11	CERAMIC CHIP	0.0022uF	10%	50V
C504	1-162-966-11	CERAMIC CHIP	0.0022uF	10%	50V
C505	1-162-970-11	CERAMIC CHIP	0.01uF	10%	25V
C506	1-162-970-11	CERAMIC CHIP	0.01uF	10%	25V
C509	1-162-923-11	CERAMIC CHIP	47PF	5%	50V
C510	1-162-923-11	CERAMIC CHIP	47PF	5%	50V
C511	1-162-960-11	CERAMIC CHIP	220PF	10%	50V
C512	1-162-960-11	CERAMIC CHIP	220PF	10%	50V
C513	1-126-960-11	ELECT	1uF	20%	50V
C514	1-126-960-11	ELECT	1uF	20%	50V
C515	1-126-947-11	ELECT	47uF	20%	35V
C516	1-126-947-11	ELECT	47uF	20%	35V
C517	1-162-964-11	CERAMIC CHIP	0.001uF	10%	50V
C519	1-162-962-11	CERAMIC CHIP	470PF	10%	50V
C520	1-162-962-11	CERAMIC CHIP	470PF	10%	50V
C521	1-125-837-91	CERAMIC CHIP	1uF	10%	6.3V
C522	1-125-837-91	CERAMIC CHIP	1uF	10%	6.3V
C523	1-125-837-91	CERAMIC CHIP	1uF	10%	6.3V
C524	1-125-837-91	CERAMIC CHIP	1uF	10%	6.3V
C525	1-162-923-11	CERAMIC CHIP	47PF	5%	50V
C526	1-162-923-11	CERAMIC CHIP	47PF	5%	50V
C527	1-162-962-11	CERAMIC CHIP	470PF	10%	50V
C528	1-162-962-11	CERAMIC CHIP	470PF	10%	50V
C529	1-162-961-11	CERAMIC CHIP	330PF	10%	50V
C530	1-162-961-11	CERAMIC CHIP	330PF	10%	50V
C531	1-162-970-11	CERAMIC CHIP	0.01uF	10%	25V
C532	1-162-970-11	CERAMIC CHIP	0.01uF	10%	25V
C533	1-162-966-11	CERAMIC CHIP	0.0022uF	10%	50V
C534	1-162-966-11	CERAMIC CHIP	0.0022uF	10%	50V
C535	1-162-966-11	CERAMIC CHIP	0.0022uF	10%	50V
C536	1-162-966-11	CERAMIC CHIP	0.0022uF	10%	50V
C537	1-162-966-11	CERAMIC CHIP	0.0022uF	10%	50V
C538	1-162-970-11	CERAMIC CHIP	0.01uF	10%	25V
C539	1-115-156-11	CERAMIC CHIP	1uF		10V
C540	1-137-391-11	MYLAR	0.0047uF	5%	100V
C541	1-100-566-91	CERAMIC CHIP	0.1uF	10%	25V
C542	1-104-662-91	ELECT	22uF	20%	25V
C543	1-162-964-11	CERAMIC CHIP	0.001uF	10%	50V
C545	1-100-566-91	CERAMIC CHIP	0.1uF	10%	25V
C546	1-100-566-91	CERAMIC CHIP	0.1uF	10%	25V
		< CONNECTOR >			
CN501	1-815-449-11	PIN, CONNECTOR (PWB) 8P			
		< TERMINAL >			
ET501	1-537-771-21	TERMINAL BOARD, GROUND			
		< IC >			
IC501	8-759-100-96	IC uPC4558G2			
IC502	8-759-100-96	IC uPC4558G2			
		< JUMPER RESISTOR >			
JR501	1-216-864-11	SHORT CHIP	0		
JR502	1-216-864-11	SHORT CHIP	0		
JR503	1-216-864-11	SHORT CHIP	0		
JR504	1-216-295-91	SHORT CHIP	0		
		< COIL >			
L501	1-456-094-11	TRANSFORMER, BIAS OSCILLATION			
		< TRANSISTOR >			
Q501	8-729-119-78	TRANSISTOR	2SC2785-HFE		
Q502	8-729-119-78	TRANSISTOR	2SC2785-HFE		
		< RESISTOR >			
R501	1-216-825-11	METAL CHIP	2.2K	5%	1/10W
R502	1-216-825-11	METAL CHIP	2.2K	5%	1/10W
R503	1-216-825-11	METAL CHIP	2.2K	5%	1/10W
R504	1-216-825-11	METAL CHIP	2.2K	5%	1/10W
R505	1-216-835-11	METAL CHIP	15K	5%	1/10W
R506	1-216-835-11	METAL CHIP	15K	5%	1/10W
R507	1-216-851-11	METAL CHIP	330K	5%	1/10W
R508	1-216-851-11	METAL CHIP	330K	5%	1/10W
R509	1-216-811-11	METAL CHIP	150	5%	1/10W
R510	1-216-811-11	METAL CHIP	150	5%	1/10W
R511	1-216-845-11	METAL CHIP	100K	5%	1/10W

Ref. No.	Part No.	Description			Remark
R512	1-216-845-11	METAL CHIP	100K	5%	1/10W
R513	1-216-845-11	METAL CHIP	100K	5%	1/10W
R514	1-216-845-11	METAL CHIP	100K	5%	1/10W
R515	1-216-864-11	SHORT CHIP	0		
R516	1-216-864-11	SHORT CHIP	0		
R517	1-216-821-11	METAL CHIP	1K	5%	1/10W
R518	1-216-821-11	METAL CHIP	1K	5%	1/10W
R519	1-216-841-11	METAL CHIP	47K	5%	1/10W
R520	1-216-841-11	METAL CHIP	47K	5%	1/10W
R521	1-216-841-11	METAL CHIP	47K	5%	1/10W
R522	1-216-841-11	METAL CHIP	47K	5%	1/10W
R523	1-216-827-11	METAL CHIP	3.3K	5%	1/10W
R524	1-216-827-11	METAL CHIP	3.3K	5%	1/10W
R525	1-216-851-11	METAL CHIP	330K	5%	1/10W
R526	1-216-851-11	METAL CHIP	330K	5%	1/10W
R527	1-216-851-11	METAL CHIP	330K	5%	1/10W
R528	1-216-851-11	METAL CHIP	330K	5%	1/10W
R529	1-216-825-11	METAL CHIP	2.2K	5%	1/10W
R530	1-216-825-11	METAL CHIP	2.2K	5%	1/10W
R531	1-216-832-11	METAL CHIP	8.2K	5%	1/10W
R532	1-216-832-11	METAL CHIP	8.2K	5%	1/10W
R533	1-216-837-11	METAL CHIP	22K	5%	1/10W
R534	1-216-835-11	METAL CHIP	15K	5%	1/10W
R535	1-216-829-11	METAL CHIP	4.7K	5%	1/10W
R536	1-216-829-11	METAL CHIP	4.7K	5%	1/10W
R537	1-216-833-11	METAL CHIP	10K	5%	1/10W
R538	1-216-833-11	METAL CHIP	10K	5%	1/10W
R539	1-216-793-11	METAL CHIP	4.7	5%	1/10W
R540	1-216-805-11	METAL CHIP	47	5%	1/10W
R541	1-216-805-11	METAL CHIP	47	5%	1/10W
R543	1-216-809-11	METAL CHIP	100	5%	1/10W
R544	1-216-809-11	METAL CHIP	100	5%	1/10W
R545	1-216-817-11	METAL CHIP	470	5%	1/10W
R546	1-216-817-11	METAL CHIP	470	5%	1/10W
		< SWITCH >			
S501	1-762-369-11	SWITCH, SLIDE (REC/PB SW)			

****

HI-AMP BOARD
****

< CAPACITOR >

Ref. No.	Part No.	Description			Remark
C101	1-126-960-11	ELECT	1uF	20%	50V
C102	1-126-960-11	ELECT	1uF	20%	50V
C103	1-164-315-11	CERAMIC CHIP	470PF	5%	50V
C104	1-164-315-11	CERAMIC CHIP	470PF	5%	50V
C105	1-162-927-11	CERAMIC CHIP	100PF	5%	50V
C106	1-162-927-11	CERAMIC CHIP	100PF	5%	50V
C107	1-126-947-11	ELECT	47uF	20%	35V
C108	1-126-947-11	ELECT	47uF	20%	35V
C109	1-162-908-11	CERAMIC CHIP	3PF	0.25PF	50V
C110	1-162-908-11	CERAMIC CHIP	3PF	0.25PF	50V
C111	1-126-968-11	ELECT	100uF	20%	50V (EC55/EC77: EXCEPT US,CND)
C111	1-128-576-11	ELECT	100uF	20%	63V (EC77: US, CND/GX99)
C113	1-126-968-11	ELECT	100uF	20%	50V (EC55/EC77: EXCEPT US,CND)
C113	1-128-576-11	ELECT	100uF	20%	63V (EC77: US, CND/GX99)
C115	1-162-970-11	CERAMIC CHIP	0.01uF	10%	25V
C116	1-162-968-11	CERAMIC CHIP	0.0047uF	10%	50V (EC77/GX99)
C116	1-162-970-11	CERAMIC CHIP	0.01uF	10%	25V (EC55)
C118	1-162-968-11	CERAMIC CHIP	0.0047uF	10%	50V (EC55)
C119	1-162-970-11	CERAMIC CHIP	0.01uF	10%	25V (EC77/GX99)
C119	1-216-864-11	SHORT CHIP	0 (EC55)		
C120	1-162-970-11	CERAMIC CHIP	0.01uF	10%	25V (EC77/GX99)
C120	1-216-864-11	SHORT CHIP	0 (EC55)		
C151	1-162-968-11	CERAMIC CHIP	0.0047uF	10%	50V
C152	1-162-968-11	CERAMIC CHIP	0.0047uF	10%	50V
C153	1-100-566-91	CERAMIC CHIP	0.1uF	10%	25V
C154	1-165-621-91	CERAMIC CHIP	0.1uF		50V
C155	1-165-621-91	CERAMIC CHIP	0.1uF		50V
		< CONNECTOR >			
* CN101	1-569-505-11	PIN, CONNECTOR 10P			
		< DIODE >			
D121	6-501-730-01	DIODE MAZ8051GMLS0 (EC55)			
D151	6-500-335-01	DIODE MC2838-T112-1			
D152	8-719-404-50	DIODE MA111-TX			
		< IC >			
IC101	6-705-620-01	IC STK433-060 (EC55)			
IC101	6-705-621-01	IC STK433-070 (EC77: EXCEPT US,CND)			
IC102	6-600-580-01	IC STK433-090-E (EC77: US, CND/GX99)			
		< TRANSISTOR >			
Q101	8-729-600-22	TRANSISTOR	2SA1235-F (EC55)		
Q102	8-729-620-07	TRANSISTOR	2SC3052EF-T1-LEF		
Q151	6-551-270-01	TRANSISTOR	2SA2026		
Q152	6-551-270-01	TRANSISTOR	2SA2026		
		< RESISTOR >			
R101	1-216-813-11	METAL CHIP	220	5%	1/10W (EC77: US, CND/GX99)
R101	1-216-824-11	METAL CHIP	1.8K	5%	1/10W (EC77: E2, E3, E51, MX, AR, AUS)
R101	1-216-825-11	METAL CHIP	2.2K	5%	1/10W (EC55/EC77: AEP, RU)
R102	1-216-813-11	METAL CHIP	220	5%	1/10W (EC77: US, CND/GX99)
R102	1-216-824-11	METAL CHIP	1.8K	5%	1/10W (EC77: E2, E3, E51, MX, AR, AUS)
R102	1-216-825-11	METAL CHIP	2.2K	5%	1/10W (EC55/EC77: AEP, RU)
R103	1-216-830-11	METAL CHIP	5.6K	5%	1/10W (EC55)
R103	1-216-834-11	METAL CHIP	12K	5%	1/10W (EC77: AEP, RU)
R103	1-216-835-11	METAL CHIP	15K	5%	1/10W (EC77: EXCEPT AEP,RU/GX99)

HI-AMP | JACK | KEY-CD | KEY-LEFT | KEY-RIGHT

Ref. No.	Part No.	Description			Remark
R104	1-216-830-11	METAL CHIP	5.6K	5%	1/10W (EC55)
R104	1-216-834-11	METAL CHIP	12K	5%	1/10W (EC77: AEP, RU)
R104	1-216-835-11	METAL CHIP	15K	5%	1/10W (EC77: EXCEPT AEP,RU/GX99)
R105	1-216-841-11	METAL CHIP	47K	5%	1/10W
R106	1-216-841-11	METAL CHIP	47K	5%	1/10W
R107	1-216-821-11	METAL CHIP	1K	5%	1/10W
R108	1-216-821-11	METAL CHIP	1K	5%	1/10W
R109	1-216-809-11	METAL CHIP	100	5%	1/10W (EC55)
R109	1-216-864-11	SHORT CHIP	0 (EC77/GX99)		
R110	1-216-809-11	METAL CHIP	100	5%	1/10W (EC55)
R110	1-216-864-11	SHORT CHIP	0 (EC77/GX99)		
R111	1-216-841-11	METAL CHIP	47K	5%	1/10W
R112	1-216-841-11	METAL CHIP	47K	5%	1/10W
R119	1-216-813-11	METAL CHIP	220	5%	1/10W
R120	1-216-813-11	METAL CHIP	220	5%	1/10W
R121	1-216-813-11	METAL CHIP	220	5%	1/10W
R122	1-216-813-11	METAL CHIP	220	5%	1/10W
R123	1-216-841-11	METAL CHIP	47K	5%	1/10W (EC55)
R124	1-216-841-11	METAL CHIP	47K	5%	1/10W (EC55)
R125	1-216-845-11	METAL CHIP	100K	5%	1/10W (EC55)
R126	1-216-829-11	METAL CHIP	4.7K	5%	1/10W (EC55)
R127	1-216-833-11	METAL CHIP	10K	5%	1/10W (EC55)
R128	1-216-833-11	METAL CHIP	10K	5%	1/10W
R129	1-216-821-11	METAL CHIP	1K	5%	1/10W
R130	1-247-807-31	CARBON	100	5%	1/4W (EC55: AEP, UK, KR/EC77: AEP, RU)
⚠R151	1-216-361-31	METAL OXIDE	0.22	5%	2W F
⚠R152	1-216-361-31	METAL OXIDE	0.22	5%	2W F
R155	1-216-813-11	METAL CHIP	220	5%	1/10W
R156	1-216-813-11	METAL CHIP	220	5%	1/10W
R159	1-216-833-11	METAL CHIP	10K	5%	1/10W
R160	1-216-833-11	METAL CHIP	10K	5%	1/10W
R161	1-216-833-11	METAL CHIP	10K	5%	1/10W
R162	1-216-833-11	METAL CHIP	10K	5%	1/10W
R165	1-216-833-11	METAL CHIP	10K	5%	1/10W
R166	1-216-833-11	METAL CHIP	10K	5%	1/10W
R167	1-216-825-11	METAL CHIP	2.2K	5%	1/10W
R168	1-216-825-11	METAL CHIP	2.2K	5%	1/10W

****

JACK BOARD
****

< CAPACITOR >

Ref. No.	Part No.	Description			Remark
C401	1-164-156-11	CERAMIC CHIP	0.1uF		25V
C402	1-164-156-11	CERAMIC CHIP	0.1uF		25V
C403	1-216-837-11	METAL CHIP	22K	5%	1/10W
C404	1-216-837-11	METAL CHIP	22K	5%	1/10W
C405	1-162-964-11	CERAMIC CHIP	0.001uF	10%	50V
C406	1-162-964-11	CERAMIC CHIP	0.001uF	10%	50V

< JACK >

Ref. No.	Part No.	Description			Remark
J401	1-566-822-51	JACK (AUDIO IN)			
J402	1-815-629-21	JACK (PHONES)			

****

KEY-CD BOARD
****

< RESISTOR >

Ref. No.	Part No.	Description			Remark
R407	1-216-825-11	METAL CHIP	2.2K	5%	1/10W
R408	1-216-829-11	METAL CHIP	4.7K	5%	1/10W
R409	1-216-833-11	METAL CHIP	10K	5%	1/10W
R410	1-216-837-11	METAL CHIP	22K	5%	1/10W
R411	1-216-841-11	METAL CHIP	47K	5%	1/10W

< SWITCH >

Ref. No.	Part No.	Description			Remark
SW306	1-762-875-21	SWITCH, KEYBOARD (DISC 1)			
SW307	1-762-875-21	SWITCH, KEYBOARD (DISC 2)			
SW308	1-762-875-21	SWITCH, KEYBOARD (DISC 3)			
SW309	1-762-875-21	SWITCH, KEYBOARD (⏏)			
SW310	1-762-875-21	SWITCH, KEYBOARD (DISC SKIP/EX-CHANGE)			

****

KEY-LEFT BOARD
****

< CONNECTOR >

Ref. No.	Part No.	Description			Remark
CN401	1-815-552-11	PIN, CONNECTOR (PWB) 4P			

< LED >

Ref. No.	Part No.	Description			Remark
LED302	6-501-483-01	DIODE SLR-325VCT31P			

< RESISTOR >

Ref. No.	Part No.	Description			Remark
R404	1-216-821-11	METAL CHIP	1K	5%	1/10W

< SWITCH >

Ref. No.	Part No.	Description			Remark
SW301	1-762-875-21	SWITCH, KEYBOARD (I/⏻)			
SW302	1-762-875-21	SWITCH, KEYBOARD (DISPLAY)			

****

KEY-RIGHT BOARD
****

< CONNECTOR >

Ref. No.	Part No.	Description			Remark
CN403	1-815-550-11	PIN, CONNECTOR (PWB) 2P			

< RESISTOR >

Ref. No.	Part No.	Description			Remark
R414	1-216-825-11	METAL CHIP	2.2K	5%	1/10W
R415	1-216-829-11	METAL CHIP	4.7K	5%	1/10W
R416	1-216-833-11	METAL CHIP	10K	5%	1/10W
R417	1-216-837-11	METAL CHIP	22K	5%	1/10W
R418	1-216-841-11	METAL CHIP	47K	5%	1/10W

< SWITCH >

Ref. No.	Part No.	Description			Remark
SW314	1-762-875-21	SWITCH, KEYBOARD (PLAY MODE/TUNING MODE)			
SW315	1-762-875-21	SWITCH, KEYBOARD (🗀+)			

Ref. No.	Part No.	Description				Remark
SW316	1-762-875-21	SWITCH, KEYBOARD (🗀–)				
SW317	1-762-875-21	SWITCH, KEYBOARD (DSGX)				
SW318	1-762-875-21	SWITCH, KEYBOARD (EQ)				

****

LOW-AMP BOARD (EC77/GX99)
****

< CAPACITOR >

Ref. No.	Part No.	Description				Remark
C101	1-126-960-11	ELECT	1uF	20%	50V	
C102	1-126-960-11	ELECT	1uF	20%	50V	
C103	1-164-315-11	CERAMIC CHIP	470PF	5%	50V	
C104	1-164-315-11	CERAMIC CHIP	470PF	5%	50V	
C105	1-162-927-11	CERAMIC CHIP	100PF	5%	50V	
C106	1-162-927-11	CERAMIC CHIP	100PF	5%	50V	
C107	1-126-947-11	ELECT	47uF	20%	35V	
C108	1-126-947-11	ELECT	47uF	20%	35V	
C109	1-162-908-11	CERAMIC CHIP	3PF	0.25PF	50V	
C110	1-162-908-11	CERAMIC CHIP	3PF	0.25PF	50V	
C111	1-126-968-11	ELECT	100uF	20%	50V	(EC77:EXCEPT US, CND)
C111	1-128-576-11	ELECT	100uF	20%	63V	(EC77: US, CND/GX99)
C113	1-126-968-11	ELECT	100uF	20%	50V	(EC77:EXCEPT US, CND)
C113	1-128-576-11	ELECT	100uF	20%	63V	(EC77: US, CND/GX99)
C115	1-162-970-11	CERAMIC CHIP	0.01uF	10%	25V	
C116	1-162-968-11	CERAMIC CHIP	0.0047uF	10%	50V	
C118	1-162-968-11	CERAMIC CHIP	0.0047uF	10%	50V	
C119	1-216-864-11	SHORT CHIP	0			
C120	1-216-864-11	SHORT CHIP	0			
C151	1-162-968-11	CERAMIC CHIP	0.0047uF	10%	50V	
C152	1-162-968-11	CERAMIC CHIP	0.0047uF	10%	50V	
C153	1-100-566-91	CERAMIC CHIP	0.1uF	10%	25V	
C154	1-165-621-91	CERAMIC CHIP	0.1uF		50V	
C155	1-165-621-91	CERAMIC CHIP	0.1uF		50V	

< CONNECTOR >

Ref. No.	Part No.	Description	Remark
* CN101	1-569-505-11	PIN, CONNECTOR 10P	

< DIODE >

Ref. No.	Part No.	Description	Remark
D121	6-501-730-01	DIODE MAZ8051GMLS0	
D151	6-500-335-01	DIODE MC2838-T112-1	
D152	8-719-404-50	DIODE MA111-TX	

< IC >

Ref. No.	Part No.	Description	Remark
IC101	6-705-621-01	IC STK433-070 (EC77: EXCEPT US, CND)	
IC102	6-600-580-01	IC STK433-090-E (EC77: US, CND/GX99)	

< TRANSISTOR >

Ref. No.	Part No.	Description		Remark
Q101	8-729-600-22	TRANSISTOR	2SA1235-F	
Q102	8-729-620-07	TRANSISTOR	2SC3052EF-T1-LEF	
Q151	6-551-270-01	TRANSISTOR	2SA2026	
Q152	6-551-270-01	TRANSISTOR	2SA2026	

< RESISTOR >

Ref. No.	Part No.	Description				Remark
R101	1-216-823-11	METAL CHIP	1.5K	5%	1/10W	(EC77: US, CND/GX99)
R101	1-216-824-11	METAL CHIP	1.8K	5%	1/10W	(EC77: E2, E3, E51, MX, AR, AUS)
R101	1-216-825-11	METAL CHIP	2.2K	5%	1/10W	(EC77: AEP, RU)
R102	1-216-823-11	METAL CHIP	1.5K	5%	1/10W	(EC77: US, CND/GX99)
R102	1-216-824-11	METAL CHIP	1.8K	5%	1/10W	(EC77: E2, E3, E51, MX, AR, AUS)
R102	1-216-825-11	METAL CHIP	2.2K	5%	1/10W	(EC77: AEP, RU)
R103	1-216-834-11	METAL CHIP	12K	5%	1/10W	(EC77: AEP, RU)
R103	1-216-835-11	METAL CHIP	15K	5%	1/10W	(EC77: E2, E3, E51, MX, AR, AUS)
R104	1-216-834-11	METAL CHIP	12K	5%	1/10W	(EC77: AEP, RU)
R104	1-216-835-11	METAL CHIP	15K	5%	1/10W	(EC77: E2, E3, E51, MX, AR, AUS)
R105	1-216-841-11	METAL CHIP	47K	5%	1/10W	
R106	1-216-841-11	METAL CHIP	47K	5%	1/10W	
R107	1-216-821-11	METAL CHIP	1K	5%	1/10W	
R108	1-216-821-11	METAL CHIP	1K	5%	1/10W	
R109	1-216-864-11	SHORT CHIP	0			
R110	1-216-864-11	SHORT CHIP	0			
R111	1-216-841-11	METAL CHIP	47K	5%	1/10W	
R112	1-216-841-11	METAL CHIP	47K	5%	1/10W	
R119	1-216-813-11	METAL CHIP	220	5%	1/10W	
R120	1-216-813-11	METAL CHIP	220	5%	1/10W	
R121	1-216-813-11	METAL CHIP	220	5%	1/10W	
R122	1-216-813-11	METAL CHIP	220	5%	1/10W	
R123	1-216-841-11	METAL CHIP	47K	5%	1/10W	
R124	1-216-841-11	METAL CHIP	47K	5%	1/10W	
R125	1-216-845-11	METAL CHIP	100K	5%	1/10W	
R126	1-216-829-11	METAL CHIP	4.7K	5%	1/10W	
R127	1-216-833-11	METAL CHIP	10K	5%	1/10W	
R128	1-216-833-11	METAL CHIP	10K	5%	1/10W	
R129	1-216-821-11	METAL CHIP	1K	5%	1/10W	
R130	1-247-807-31	CARBON	100	5%	1/4W	(EC77: AEP, RU)
⚠R151	1-216-361-31	METAL OXIDE	0.22	5%	2W	F
⚠R152	1-216-361-31	METAL OXIDE	0.22	5%	2W	F
R155	1-216-813-11	METAL CHIP	220	5%	1/10W	
R156	1-216-813-11	METAL CHIP	220	5%	1/10W	
R159	1-216-833-11	METAL CHIP	10K	5%	1/10W	
R160	1-216-833-11	METAL CHIP	10K	5%	1/10W	
R161	1-216-833-11	METAL CHIP	10K	5%	1/10W	
R162	1-216-833-11	METAL CHIP	10K	5%	1/10W	
R165	1-216-833-11	METAL CHIP	10K	5%	1/10W	
R166	1-216-833-11	METAL CHIP	10K	5%	1/10W	
R167	1-216-825-11	METAL CHIP	2.2K	5%	1/10W	
R168	1-216-825-11	METAL CHIP	2.2K	5%	1/10W	

****

Ref. No.	Part No.	Description			Remark
	A-1218-507-A	MAIN BOARD, COMPLETE (GX99)			
	A-1218-539-A	MAIN BOARD, COMPLETE (EC77: US, CND)			
	A-1218-580-A	MAIN BOARD, COMPLETE (EC77: AEP, RU)			
	A-1218-600-A	MAIN BOARD, COMPLETE (EC77: E3, AUS)			
	A-1218-637-A	MAIN BOARD, COMPLETE (EC77: E2, E51, AR)			
	A-1218-693-A	MAIN BOARD, COMPLETE (EC55: US, CND)			
	A-1218-725-A	MAIN BOARD, COMPLETE (EC55: AEP, UK, RU)			
	A-1218-774-A	MAIN BOARD, COMPLETE (EC55: SP, AUS)			
	A-1218-814-A	MAIN BOARD, COMPLETE			(EC55: E2, E51, MX, AR)
	A-1258-298-A	MAIN BOARD, COMPLETE (EC55: KR)			
	A-1271-410-A	MAIN BOARD, COMPLETE (EC77: MX)			
		**********			
		< CAPACITOR >			
C601	1-126-947-11	ELECT	47uF	20%	35V
C602	1-126-965-91	ELECT	22uF	20%	50V
C603	1-162-974-11	CERAMIC CHIP	0.01uF		50V (EC77/GX99)
C604	1-100-566-91	CERAMIC CHIP	0.1uF	10%	25V (EC77/GX99)
C605	1-100-566-91	CERAMIC CHIP	0.1uF	10%	25V (EC77/GX99)
C606	1-162-974-11	CERAMIC CHIP	0.01uF		50V (EC77/GX99)
C607	1-100-566-91	CERAMIC CHIP	0.1uF	10%	25V
C608	1-100-566-91	CERAMIC CHIP	0.1uF	10%	25V
C609	1-162-974-11	CERAMIC CHIP	0.01uF		50V
C610	1-162-974-11	CERAMIC CHIP	0.01uF		50V
C611	1-127-715-91	CERAMIC CHIP	0.22uF	10%	16V
C612	1-127-715-91	CERAMIC CHIP	0.22uF	10%	16V
C613	1-126-964-11	ELECT	10uF	20%	50V
C614	1-126-963-11	ELECT	4.7uF	20%	50V
C615	1-100-566-91	CERAMIC CHIP	0.1uF	10%	25V (EC77/GX99)
C616	1-100-566-91	CERAMIC CHIP	0.1uF	10%	25V (EC77/GX99)
C617	1-100-566-91	CERAMIC CHIP	0.1uF	10%	25V
C618	1-100-566-91	CERAMIC CHIP	0.1uF	10%	25V
C620	1-104-658-91	ELECT	100uF	20%	10V
C621	1-137-749-11	MYLAR	0.1uF		100V
C622	1-114-471-51	ELECT	3300uF	20%	63V (EC77: US, CND, AEP, RU/GX99)
C622	1-128-550-11	ELECT	2200uF	20%	50V (EC55)
C623	1-137-749-11	MYLAR	0.1uF		100V
C626	1-114-471-51	ELECT	3300uF	20%	63V (EC77: US, CND, AEP, RU/GX99)
C626	1-128-550-11	ELECT	2200uF	20%	50V (EC55)
C627	1-126-943-11	ELECT	2200uF	20%	25V
C628	1-126-942-61	ELECT	1000uF	20%	25V
C630	1-126-947-11	ELECT	47uF	20%	35V
C631	1-126-933-11	ELECT	100uF	20%	16V
C632	1-126-963-11	ELECT	4.7uF	20%	50V
C633	1-110-563-11	CERAMIC CHIP	0.068uF	10%	16V
C634	1-110-563-11	CERAMIC CHIP	0.068uF	10%	16V
C635	1-125-837-91	CERAMIC CHIP	1uF	10%	6.3V (EXCEPT US, CND)
C636	1-126-960-11	ELECT	1uF	20%	50V
C637	1-110-563-11	CERAMIC CHIP	0.068uF	10%	16V

Ref. No.	Part No.	Description			Remark
C638	1-110-563-11	CERAMIC CHIP	0.068uF	10%	16V
C639	1-162-968-11	CERAMIC CHIP	0.0047uF	10%	50V
C640	1-162-968-11	CERAMIC CHIP	0.0047uF	10%	50V
C641	1-126-961-11	ELECT	2.2uF	20%	50V (EXCEPT AEP, UK, RU)
C641	1-126-962-11	ELECT	3.3uF	20%	50V (AEP, UK, RU)
C642	1-164-227-11	CERAMIC CHIP	0.022uF	10%	25V
C643	1-125-837-91	CERAMIC CHIP	1uF	10%	6.3V (EXCEPT US, CND)
C644	1-126-960-11	ELECT	1uF	20%	50V
C645	1-162-960-11	CERAMIC CHIP	220PF	10%	50V
C646	1-126-960-11	ELECT	1uF	20%	50V
C648	1-125-837-91	CERAMIC CHIP	1uF	10%	6.3V
C649	1-162-960-11	CERAMIC CHIP	220PF	10%	50V
C650	1-125-837-91	CERAMIC CHIP	1uF	10%	6.3V
C651	1-162-927-11	CERAMIC CHIP	100PF	5%	50V (EXCEPT US, CND)
C652	1-125-837-91	CERAMIC CHIP	1uF	10%	6.3V
C653	1-162-927-11	CERAMIC CHIP	100PF	5%	50V (EXCEPT US, CND)
C654	1-125-837-91	CERAMIC CHIP	1uF	10%	6.3V
C655	1-162-960-11	CERAMIC CHIP	220PF	10%	50V
C656	1-125-837-91	CERAMIC CHIP	1uF	10%	6.3V
C658	1-125-837-91	CERAMIC CHIP	1uF	10%	6.3V
C659	1-162-960-11	CERAMIC CHIP	220PF	10%	50V
C660	1-162-960-11	CERAMIC CHIP	220PF	10%	50V
C661	1-126-964-11	ELECT	10uF	20%	50V
C662	1-100-566-91	CERAMIC CHIP	0.1uF	10%	25V
C663	1-126-960-11	ELECT	1uF	20%	50V
C664	1-126-960-11	ELECT	1uF	20%	50V
C665	1-126-960-11	ELECT	1uF	20%	50V
C666	1-162-960-11	CERAMIC CHIP	220PF	10%	50V
C667	1-126-933-11	ELECT	100uF	20%	16V
C668	1-100-597-91	CERAMIC CHIP	0.1uF	10%	25V (EC55:EXCEPT AEP, UK, RU, KR)
C669	1-126-923-91	ELECT	220uF	20%	10V
C670	1-162-927-11	CERAMIC CHIP	100PF	5%	50V (EC55:EXCEPT AEP, UK, RU, KR)
C671	1-104-658-91	ELECT	100uF	20%	10V
C673	1-126-925-91	ELECT	470uF	20%	10V
C675	1-126-960-11	ELECT	1uF	20%	50V
C676	1-126-960-11	ELECT	1uF	20%	50V
C677	1-135-516-11	ELECT	3300uF	20%	63V (EC77: EXCEPT US, CND, AEP, RU)
C678	1-135-516-11	ELECT	3300uF	20%	63V (EC77: EXCEPT US, CND, AEP, RU)
C679	1-100-566-91	CERAMIC CHIP	0.1uF	10%	25V
C680	1-162-966-11	CERAMIC CHIP	0.0022uF	10%	50V
C681	1-162-966-11	CERAMIC CHIP	0.0022uF	10%	50V
C682	1-162-966-11	CERAMIC CHIP	0.0022uF	10%	50V
C683	1-162-966-11	CERAMIC CHIP	0.0022uF	10%	50V
C684	1-162-915-11	CERAMIC CHIP	10PF	0.5PF	50V (EC55:EXCEPT AEP, UK, RU, KR)
C684	1-162-919-11	CERAMIC CHIP	22PF	5%	50V (EC77:EXCEPT AEP,UK/GX99)
C684	1-164-315-11	CERAMIC CHIP	470PF	5%	50V (AEP, UK, RU, KR)
C685	1-162-915-11	CERAMIC CHIP	10PF	0.5PF	50V (EC55:EXCEPT AEP, UK, RU, KR)
C685	1-162-919-11	CERAMIC CHIP	22PF	5%	50V (EC77:EXCEPT AEP,UK/GX99)

Ref. No.	Part No.	Description			Remark
C685	1-164-315-11	CERAMIC CHIP	470PF	5%	50V (AEP, UK, RU, KR)
C686	1-162-915-11	CERAMIC CHIP	10PF	0.5PF	50V (EC55:EXCEPT AEP, UK, RU, KR)
C686	1-162-919-11	CERAMIC CHIP	22PF	5%	50V (EC77:EXCEPT AEP, RU/GX99)
C687	1-162-964-11	CERAMIC CHIP	0.001uF	10%	50V (EXCEPT AEP, UK, RU, KR)
C688	1-162-964-11	CERAMIC CHIP	0.001uF	10%	50V (EXCEPT AEP, UK, RU, KR)
C689	1-162-962-11	CERAMIC CHIP	470PF	10%	50V
C690	1-162-966-11	CERAMIC CHIP	0.0022uF	10%	50V
C691	1-100-566-91	CERAMIC CHIP	0.1uF	10%	25V
C692	1-162-970-11	CERAMIC CHIP	0.01uF	10%	25V
C693	1-100-566-91	CERAMIC CHIP	0.1uF	10%	25V
C694	1-100-566-91	CERAMIC CHIP	0.1uF	10%	25V
C695	1-125-837-91	CERAMIC CHIP	1uF	10%	6.3V
C696	1-125-837-91	CERAMIC CHIP	1uF	10%	6.3V
C698	1-162-964-11	CERAMIC CHIP	0.001uF	10%	50V (EXCEPT AEP, UK, RU, KR)
C699	1-162-964-11	CERAMIC CHIP	0.001uF	10%	50V (AEP, UK, RU, KR)
C700	1-162-964-11	CERAMIC CHIP	0.001uF	10%	50V (AEP, UK, RU, KR)
C701	1-162-970-11	CERAMIC CHIP	0.01uF	10%	25V (EC77/GX99)
C702	1-162-970-11	CERAMIC CHIP	0.01uF	10%	25V (EC77/GX99)
C703	1-162-970-11	CERAMIC CHIP	0.01uF	10%	25V (EC77/GX99)
C704	1-162-970-11	CERAMIC CHIP	0.01uF	10%	25V (EC77/GX99)
C802	1-126-933-11	ELECT	100uF	20%	16V
C803	1-125-837-91	CERAMIC CHIP	1uF	10%	6.3V
C804	1-162-918-11	CERAMIC CHIP	18PF	5%	50V
C805	1-117-863-11	CERAMIC CHIP	0.47uF	10%	6.3V
C806	1-162-962-11	CERAMIC CHIP	470PF	10%	50V
C807	1-125-837-91	CERAMIC CHIP	1uF	10%	6.3V
C808	1-162-918-11	CERAMIC CHIP	18PF	5%	50V
C809	1-162-927-11	CERAMIC CHIP	100PF	5%	50V
C810	1-162-927-11	CERAMIC CHIP	100PF	5%	50V
C811	1-162-927-11	CERAMIC CHIP	100PF	5%	50V
C814	1-162-968-11	CERAMIC CHIP	0.0047uF	10%	50V (EXCEPT US, CND)
C814	1-162-970-11	CERAMIC CHIP	0.01uF	10%	25V (US, CND)
C815	1-162-968-11	CERAMIC CHIP	0.0047uF	10%	50V (EXCEPT US, CND)
C815	1-162-970-11	CERAMIC CHIP	0.01uF	10%	25V (US, CND)
C816	1-162-970-11	CERAMIC CHIP	0.01uF	10%	25V
C817	1-162-970-11	CERAMIC CHIP	0.01uF	10%	25V
C819	1-162-962-11	CERAMIC CHIP	470PF	10%	50V
C820	1-162-910-11	CERAMIC CHIP	5PF	0.25PF	50V
C821	1-162-966-11	CERAMIC CHIP	0.0022uF	10%	50V
C822	1-126-965-91	ELECT	22uF	20%	50V
C823	1-126-923-91	ELECT	220uF	20%	10V
C824	1-165-908-11	CERAMIC CHIP	1uF	10%	10V
C826	1-162-964-11	CERAMIC CHIP	0.001uF	10%	50V

Ref. No.	Part No.	Description			Remark
C827	1-165-176-11	CERAMIC CHIP	0.047uF	10%	16V
C828	1-162-927-11	CERAMIC CHIP	100PF	5%	50V
C829	1-117-863-11	CERAMIC CHIP	0.47uF	10%	6.3V
C830	1-162-907-11	CERAMIC CHIP	2PF	0.25PF	50V
C831	1-117-863-11	CERAMIC CHIP	0.47uF	10%	6.3V
C832	1-117-863-11	CERAMIC CHIP	0.47uF	10%	6.3V
C833	1-126-923-91	ELECT	220uF	20%	10V
C834	1-162-915-11	CERAMIC CHIP	10PF	0.5PF	50V
C835	1-165-176-11	CERAMIC CHIP	0.047uF	10%	16V
C836	1-164-227-11	CERAMIC CHIP	0.022uF	10%	25V
C837	1-162-915-11	CERAMIC CHIP	10PF	0.5PF	50V
C838	1-162-964-11	CERAMIC CHIP	0.001uF	10%	50V
C840	1-100-566-91	CERAMIC CHIP	0.1uF	10%	25V
C841	1-162-964-11	CERAMIC CHIP	0.001uF	10%	50V
C843	1-164-156-11	CERAMIC CHIP	0.1uF		25V
C844	1-100-566-91	CERAMIC CHIP	0.1uF	10%	25V
C845	1-115-467-11	CERAMIC CHIP	0.22uF	10%	10V
C846	1-162-970-11	CERAMIC CHIP	0.01uF	10%	25V
C847	1-100-566-91	CERAMIC CHIP	0.1uF	10%	25V
C848	1-164-156-11	CERAMIC CHIP	0.1uF		25V
C849	1-162-970-11	CERAMIC CHIP	0.01uF	10%	25V
C850	1-100-566-91	CERAMIC CHIP	0.1uF	10%	25V
		< FILTER >			
CF801	1-781-962-21	FILTER, CERAMIC			
		< CONNECTOR >			
CN601	1-819-131-11	PIN, CONNECTOR 3P			
* CN602	1-569-496-11	SOCKET, CONNECTOR 10P (EC77/GX99)			
* CN603	1-569-496-11	SOCKET, CONNECTOR 10P			
CN604	1-819-136-11	PIN, CONNECTOR 8P			
CN605	1-568-828-11	CONNECTOR, FFC 9P			
CN606	1-784-731-11	CONNECTOR, FFC 9P (EXCEPT US, CND)			
CN607	1-779-295-11	CONNECTOR, FFC (LIF (NON-ZIF)) 27P			
CN608	1-779-289-11	CONNECTOR, FFC (LIF (NON-ZIF)) 21P			
* CN801	1-506-680-11	PLUG, CONNECTOR (2.5MM) 3P (ANTENNA)			
		< DIODE >			
D601	6-500-335-01	DIODE MC2838-T112-1			
D602	6-500-335-01	DIODE MC2838-T112-1			
D603	8-719-404-50	DIODE MA111-TX (EC77/GX99)			
D604	8-719-404-50	DIODE MA111-TX			
D605	8-719-404-50	DIODE MA111-TX			
D606	8-719-000-07	DIODE MC2836			
D607	6-501-046-01	DIODE 1N5402-F46			
D608	6-501-046-01	DIODE 1N5402-F46			
D609	6-501-046-01	DIODE 1N5402-F46			
D610	6-501-046-01	DIODE 1N5402-F46			
D611	8-719-063-79	DIODE 1N4002B			
D612	8-719-063-79	DIODE 1N4002B			
D614	8-719-404-50	DIODE MA111-TX			
D615	8-719-063-79	DIODE 1N4002B			
D616	8-719-404-50	DIODE MA111-TX			
D617	6-500-335-01	DIODE MC2838-T112-1			
D618	6-501-719-01	DIODE MAZ8039GHLS0			
D619	8-719-063-79	DIODE 1N4002B			
D620	8-719-063-79	DIODE 1N4002B			

Ref. No.	Part No.	Description	Remark
D621	6-501-722-01	DIODE MAZ8043GMLS0	
D622	6-501-752-01	DIODE MAZ8082GMLS0	
D623	8-719-062-51	DIODE 1PS226-115	
D801	6-501-142-01	DIODE SVC347A-TL-E	
D802	8-719-062-51	DIODE 1PS226-115	
D803	6-501-369-01	DIODE SVC230-TB-E	
D804	6-501-369-01	DIODE SVC230-TB-E	
D805	8-719-062-51	DIODE 1PS226-115	
D806	8-719-062-51	DIODE 1PS226-115	
		< FERRITE BEAD >	
FB601	1-412-473-21	INDUCTOR (SMALL TYPE)	
		< FILTER >	
FL801	1-130-483-00	CAP, PE TEREPHTHALATE 0.01MF	
FL802	1-760-393-11	FILTER, CERAMIC	
FL803	1-236-711-21	FILTER, BAND PASS	
		< IC >	
IC602	6-710-289-01	IC R2S15904SP	
IC801	6-708-840-01	IC LV23003VA	
		< JACK >	
J601	1-815-025-11	JACK, PIN 1P (SUBWOOFER) (GX99)	
		< JUMPER RESISTOR >	
JR601	1-216-864-11	SHORT CHIP 0	
JR602	1-216-864-11	SHORT CHIP 0	
JR603	1-216-296-11	SHORT CHIP 0	
JR604	1-216-864-11	SHORT CHIP 0	
		< COIL >	
L601	1-456-107-11	COIL, AIR-CORE (EC77/GX99)	
L602	1-456-107-11	COIL, AIR-CORE (EC77/GX99)	
L603	1-456-107-11	COIL, AIR-CORE	
L604	1-456-107-11	COIL, AIR-CORE	
L801	1-456-596-11	COIL, MW OSC	
L802	1-457-168-11	COIL, DET	
L803	1-457-162-11	COIL, AIR-CORE	
L804	1-457-163-11	COIL, AIR-CORE	
L805	1-457-161-11	COIL, AM ANTENNA	
		< TRANSISTOR >	
Q601	8-729-037-03	TRANSISTOR KTA1266GR-AT	
Q602	8-729-120-28	TRANSISTOR 2SC1623-L5L6	
Q603	8-729-120-28	TRANSISTOR 2SC1623-L5L6	
Q604	8-729-120-28	TRANSISTOR 2SC1623-L5L6	
Q605	8-729-120-28	TRANSISTOR 2SC1623-L5L6	
Q606	8-729-120-28	TRANSISTOR 2SC1623-L5L6	
Q608	8-729-120-28	TRANSISTOR 2SC1623-L5L6	
Q616	8-729-120-28	TRANSISTOR 2SC1623-L5L6	(EXCEPT US, CND)
Q617	8-729-120-28	TRANSISTOR 2SC1623-L5L6	(EXCEPT US, CND)
Q618	8-729-600-22	TRANSISTOR 2SA1235-F	
Q619	8-729-120-28	TRANSISTOR 2SC1623-L5L6	
Q622	8-729-120-28	TRANSISTOR 2SC1623-L5L6	
Q624	8-729-036-86	TRANSISTOR KTC3203Y-AT	
Q801	8-729-120-28	TRANSISTOR 2SC1623-L5L6	
Q802	8-729-120-28	TRANSISTOR 2SC1623-L5L6	
Q803	6-550-304-01	TRANSISTOR 2SC5477-T122-1	
		< RESISTOR >	
R601	1-216-817-11	METAL CHIP 470 5% 1/10W	
R603	1-216-793-11	METAL CHIP 4.7 5% 1/10W	(EC77: US, CND/GX99)
R603	1-216-794-11	METAL CHIP 5.6 5% 1/10W	(EC55/EC77: EXCEPT US, CND)
R604	1-216-845-11	METAL CHIP 100K 5% 1/10W	
R605	1-216-799-11	METAL CHIP 15 5% 1/10W	(EC77: US, CND/GX99)
R606	1-216-797-11	METAL CHIP 10 5% 1/10W	(EC77/GX99)
R607	1-216-797-11	METAL CHIP 10 5% 1/10W	(EC77/GX99)
R608	1-216-797-11	METAL CHIP 10 5% 1/10W	(EC77/GX99)
R609	1-216-829-11	METAL CHIP 4.7K 5% 1/10W	
R610	1-216-829-11	METAL CHIP 4.7K 5% 1/10W	
R611	1-216-797-11	METAL CHIP 10 5% 1/10W	
R612	1-216-797-11	METAL CHIP 10 5% 1/10W	
R613	1-216-833-11	METAL CHIP 10K 5% 1/10W	
R614	1-216-833-11	METAL CHIP 10K 5% 1/10W	
R615	1-216-797-11	METAL CHIP 10 5% 1/10W	
R616	1-216-828-11	METAL CHIP 3.9K 5% 1/10W	(EC55)
R616	1-216-832-11	METAL CHIP 8.2K 5% 1/10W	(EC77: AEP, RU)
R616	1-216-833-11	METAL CHIP 10K 5% 1/10W	(EC77: E2, E3, E51, MX, AR, AUS)
R616	1-216-835-11	METAL CHIP 15K 5% 1/10W	(EC77: US, CND/GX99)
R617	1-216-833-11	METAL CHIP 10K 5% 1/10W	
R618	1-216-833-11	METAL CHIP 10K 5% 1/10W	
R619	1-216-828-11	METAL CHIP 3.9K 5% 1/10W	(EC55)
R619	1-216-832-11	METAL CHIP 8.2K 5% 1/10W	(EC77: AEP, RU)
R619	1-216-833-11	METAL CHIP 10K 5% 1/10W	(EC77: E2, E3, E51, MX, AR, AUS)
R619	1-216-835-11	METAL CHIP 15K 5% 1/10W	(EC77: US, CND/GX99)
R620	1-216-829-11	METAL CHIP 4.7K 5% 1/10W	
R621	1-216-829-11	METAL CHIP 4.7K 5% 1/10W	
R622	1-216-839-11	METAL CHIP 33K 5% 1/10W	
R623	1-216-833-11	METAL CHIP 10K 5% 1/10W	
R624	1-216-833-11	METAL CHIP 10K 5% 1/10W	
R625	1-216-839-11	METAL CHIP 33K 5% 1/10W	
R626	1-216-833-11	METAL CHIP 10K 5% 1/10W	
R627	1-216-829-11	METAL CHIP 4.7K 5% 1/10W	
R629	1-216-829-11	METAL CHIP 4.7K 5% 1/10W	
R630	1-216-841-11	METAL CHIP 47K 5% 1/10W	
R631	1-216-797-11	METAL CHIP 10 5% 1/10W	(EC77/GX99)

MAIN

Ref. No.	Part No.	Description			Remark
R632	1-216-845-11	METAL CHIP	100K	5%	1/10W (EC77/GX99)
R633	1-216-845-11	METAL CHIP	100K	5%	1/10W (EC77/GX99)
R634	1-249-401-11	CARBON	47	5%	1/4W (EC77/GX99)
R635	1-249-401-11	CARBON	47	5%	1/4W (EC77/GX99)
R636	1-249-401-11	CARBON	47	5%	1/4W (EC77/GX99)
R638	1-249-401-11	CARBON	47	5%	1/4W
R639	1-216-845-11	METAL CHIP	100K	5%	1/10W
R640	1-216-845-11	METAL CHIP	100K	5%	1/10W
R641	1-249-401-11	CARBON	47	5%	1/4W
R642	1-249-401-11	CARBON	47	5%	1/4W
R643	1-216-829-11	METAL CHIP	4.7K	5%	1/10W
R644	1-216-821-11	METAL CHIP	1K	5%	1/10W
R645	1-216-825-11	METAL CHIP	2.2K	5%	1/10W (EC77: MX)
R645	1-216-829-11	METAL CHIP	4.7K	5%	1/10W (EC55/EC77: EXCEPT MX/GX99)
R646	1-216-809-11	METAL CHIP	100	5%	1/10W
R647	1-216-797-11	METAL CHIP	10	5%	1/10W
R648	1-216-841-11	METAL CHIP	47K	5%	1/10W
R649	1-216-825-11	METAL CHIP	2.2K	5%	1/10W
R650	1-216-829-11	METAL CHIP	4.7K	5%	1/10W
R651	1-216-829-11	METAL CHIP	4.7K	5%	1/10W
R652	1-216-809-11	METAL CHIP	100	5%	1/10W
R655	1-216-864-11	SHORT CHIP	0		
R658	1-260-087-11	CARBON	100	5%	1/2W
R660	1-260-087-11	CARBON	100	5%	1/2W
R661	1-260-087-11	CARBON	100	5%	1/2W
R662	1-260-087-11	CARBON	100	5%	1/2W
R663	1-260-087-11	CARBON	100	5%	1/2W
R664	1-260-087-11	CARBON	100	5%	1/2W
R666	1-216-821-11	METAL CHIP	1K	5%	1/10W
R667	1-216-841-11	METAL CHIP	47K	5%	1/10W
R668	1-260-087-11	CARBON	100	5%	1/2W
R671	1-260-087-11	CARBON	100	5%	1/2W
R674	1-249-401-11	CARBON	47	5%	1/4W
R675	1-249-401-11	CARBON	47	5%	1/4W
R676	1-216-833-11	METAL CHIP	10K	5%	1/10W
R677	1-216-833-11	METAL CHIP	10K	5%	1/10W
R678	1-216-841-11	METAL CHIP	47K	5%	1/10W
R679	1-216-829-11	METAL CHIP	4.7K	5%	1/10W (EXCEPT US, CND)
R680	1-216-829-11	METAL CHIP	4.7K	5%	1/10W (EXCEPT US, CND)
R681	1-216-832-11	METAL CHIP	8.2K	5%	1/10W
R682	1-216-833-11	METAL CHIP	10K	5%	1/10W (EXCEPT US, CND)
R683	1-216-826-11	METAL CHIP	2.7K	5%	1/10W (EXCEPT US, CND)
R684	1-216-832-11	METAL CHIP	8.2K	5%	1/10W
R685	1-216-841-11	METAL CHIP	47K	5%	1/10W
R686	1-216-842-11	METAL CHIP	56K	5%	1/10W
R687	1-216-849-11	METAL CHIP	220K	5%	1/10W
R688	1-216-833-11	METAL CHIP	10K	5%	1/10W
R689	1-216-838-11	METAL CHIP	27K	5%	1/10W
R690	1-216-825-11	METAL CHIP	2.2K	5%	1/10W
R691	1-216-833-11	METAL CHIP	10K	5%	1/10W
R692	1-216-829-11	METAL CHIP	4.7K	5%	1/10W (EXCEPT US, CND, AEP, UK, RU)
R692	1-216-833-11	METAL CHIP	10K	5%	1/10W (US, CND, AEP, UK, RU)
R693	1-216-825-11	METAL CHIP	2.2K	5%	1/10W
R694	1-216-833-11	METAL CHIP	10K	5%	1/10W (EXCEPT US, CND)
R695	1-216-826-11	METAL CHIP	2.7K	5%	1/10W (EXCEPT US, CND)
R696	1-216-833-11	METAL CHIP	10K	5%	1/10W
R697	1-216-821-11	METAL CHIP	1K	5%	1/10W
R700	1-216-829-11	METAL CHIP	4.7K	5%	1/10W
R701	1-216-864-11	SHORT CHIP	0 (US, CND)		
R702	1-216-864-11	SHORT CHIP	0 (US, CND)		
R704	1-216-829-11	METAL CHIP	4.7K	5%	1/10W
R706	1-216-813-11	METAL CHIP	220	5%	1/10W
R707	1-216-813-11	METAL CHIP	220	5%	1/10W
R708	1-216-833-11	METAL CHIP	10K	5%	1/10W
R709	1-216-821-11	METAL CHIP	1K	5%	1/10W
R710	1-216-839-11	METAL CHIP	33K	5%	1/10W (GX99)
R711	1-216-839-11	METAL CHIP	33K	5%	1/10W (GX99)
R712	1-216-820-11	METAL CHIP	820	5%	1/10W (GX99)
R715	1-216-809-11	METAL CHIP	100	5%	1/10W
R716	1-216-821-11	METAL CHIP	1K	5%	1/10W
R717	1-249-403-11	CARBON	68	5%	1/4W
R718	1-249-403-11	CARBON	68	5%	1/4W
R719	1-249-403-11	CARBON	68	5%	1/4W
R720	1-216-837-11	METAL CHIP	22K	5%	1/10W
R722	1-216-809-11	METAL CHIP	100	5%	1/10W
R724	1-249-395-11	CARBON	15	5%	1/4W (EC77: US, CND/GX99)
R724	1-247-791-91	CARBON	22	5%	1/4W (EC55/EC77: EXCEPT US, CND)
R725	1-249-395-11	CARBON	15	5%	1/4W (EC77: US, CND/GX99)
R725	1-247-791-91	CARBON	22	5%	1/4W (EC55/EC77: EXCEPT US, CND)
R726	1-249-395-11	CARBON	15	5%	1/4W (EC77: US, CND/GX99)
R726	1-247-791-91	CARBON	22	5%	1/4W (EC55/EC77: EXCEPT US, CND)
R727	1-216-829-11	METAL CHIP	4.7K	5%	1/10W
R728	1-216-829-11	METAL CHIP	4.7K	5%	1/10W
R729	1-216-845-11	METAL CHIP	100K	5%	1/10W
R731	1-216-809-11	METAL CHIP	100	5%	1/10W (AEP, UK, RU, KR)
R731	1-216-864-11	SHORT CHIP	0 (EXCEPT AEP, UK, RU, KR)		
R732	1-216-809-11	METAL CHIP	100	5%	1/10W (AEP, UK, RU, KR)
R732	1-216-864-11	SHORT CHIP	0 (EXCEPT AEP, UK, RU, KR)		
R801	1-216-809-11	METAL CHIP	100	5%	1/10W
R802	1-216-801-11	METAL CHIP	22	5%	1/10W
R803	1-216-825-11	METAL CHIP	2.2K	5%	1/10W
R804	1-216-801-11	METAL CHIP	22	5%	1/10W
R805	1-216-853-11	METAL CHIP	470K	5%	1/10W

Ref. No.	Part No.	Description			Remark
R806	1-216-841-11	METAL CHIP	47K	5%	1/10W
R807	1-216-837-11	METAL CHIP	22K	5%	1/10W
R808	1-216-801-11	METAL CHIP	22	5%	1/10W
R809	1-216-809-11	METAL CHIP	100	5%	1/10W
R810	1-216-829-11	METAL CHIP	4.7K	5%	1/10W
R811	1-216-845-11	METAL CHIP	100K	5%	1/10W
R812	1-216-841-11	METAL CHIP	47K	5%	1/10W
R813	1-216-853-11	METAL CHIP	470K	5%	1/10W
R814	1-216-837-11	METAL CHIP	22K	5%	1/10W
R815	1-216-833-11	METAL CHIP	10K	5%	1/10W
R816	1-216-821-11	METAL CHIP	1K	5%	1/10W
R817	1-216-841-11	METAL CHIP	47K	5%	1/10W
R818	1-216-833-11	METAL CHIP	10K	5%	1/10W
R819	1-216-839-11	METAL CHIP	33K	5%	1/10W
R820	1-216-829-11	METAL CHIP	4.7K	5%	1/10W
R821	1-216-829-11	METAL CHIP	4.7K	5%	1/10W
R822	1-216-809-11	METAL CHIP	100	5%	1/10W
R823	1-216-833-11	METAL CHIP	10K	5%	1/10W
R824	1-216-817-11	METAL CHIP	470	5%	1/10W
R825	1-216-829-11	METAL CHIP	4.7K	5%	1/10W
R826	1-216-821-11	METAL CHIP	1K	5%	1/10W
R827	1-216-845-11	METAL CHIP	100K	5%	1/10W
R829	1-216-829-11	METAL CHIP	4.7K	5%	1/10W
R830	1-216-827-11	METAL CHIP	3.3K	5%	1/10W
R831	1-216-825-11	METAL CHIP	2.2K	5%	1/10W
R832	1-216-857-11	METAL CHIP	1M	5%	1/10W
R836	1-218-867-11	METAL CHIP	6.8K	0.5%	1/10W
R837	1-216-845-11	METAL CHIP	100K	5%	1/10W
R838	1-216-837-11	METAL CHIP	22K	5%	1/10W
R839	1-216-797-11	METAL CHIP	10	5%	1/10W
R840	1-216-864-11	SHORT CHIP	0		
R841	1-216-833-11	METAL CHIP	10K	5%	1/10W
R842	1-216-864-11	SHORT CHIP	0		
R843	1-216-845-11	METAL CHIP	100K	5%	1/10W
R844	1-216-825-11	METAL CHIP	2.2K	5%	1/10W
R846	1-216-797-11	METAL CHIP	10	5%	1/10W
R847	1-216-864-11	SHORT CHIP	0		
R848	1-216-809-11	METAL CHIP	100	5%	1/10W
R849	1-216-813-11	METAL CHIP	220	5%	1/10W
R850	1-216-809-11	METAL CHIP	100	5%	1/10W
R851	1-216-801-11	METAL CHIP	22	5%	1/10W
R852	1-216-825-11	METAL CHIP	2.2K	5%	1/10W
R853	1-216-819-11	METAL CHIP	680	5%	1/10W
		< RELAY >			
RY601	1-755-307-11	RELAY (EC77/GX99)			
RY602	1-755-307-11	RELAY			
		< TRANSFORMER >			
T801	1-433-741-11	TRANSFORMER, IF			
		< TERMINAL >			
TB601	1-780-381-11	TERMINAL BOARD, PUSH (ANTENNA) 4P (SPEAKER HIGH FREQ.)(EC77/GX99)			
TB602	1-536-708-81	TERMINAL BOARD, PUSH (4P) (SPEAKER LOW FREQ.)			

Ref. No.	Part No.	Description			Remark
		< VIBRATOR >			
X801	1-813-917-11	VIBRATOR, CRYSTAL (75kHz)			
**********					
	A-1218-504-A	PANEL BOARD, COMPLETE (GX99)			
	A-1218-536-A	PANEL BOARD, COMPLETE (EC77: US, CND)			
	A-1218-562-A	PANEL BOARD, COMPLETE (EC77: AEP)			
	A-1218-590-A	PANEL BOARD, COMPLETE (EC77: RU)			
	A-1218-598-A	PANEL BOARD, COMPLETE (EC77: E3)			
	A-1218-635-A	PANEL BOARD, COMPLETE (EC77: E2)			
	A-1218-642-A	PANEL BOARD, COMPLETE (EC77: E51, AR)			
	A-1218-654-A	PANEL BOARD, COMPLETE (EC77: MX)			
	A-1218-690-A	PANEL BOARD, COMPLETE (EC55: US, CND)			
	A-1218-723-A	PANEL BOARD, COMPLETE (EC55: AEP, UK)			
	A-1218-754-A	PANEL BOARD, COMPLETE (EC55: RU)			
	A-1218-772-A	PANEL BOARD, COMPLETE (EC55: KR, SP)			
	A-1218-812-A	PANEL BOARD, COMPLETE (EC55: E2)			
	A-1218-819-A	PANEL BOARD, COMPLETE (EC55: E51, AR)			
	A-1218-831-A	PANEL BOARD, COMPLETE (EC55: MX)			
	A-1247-478-A	PANEL BOARD, COMPLETE (EC77: AUS)			
	A-1247-481-A	PANEL BOARD, COMPLETE (EC55: AUS)			
		**********			
	2-649-117-01	HOLDER (LCD)			
	2-649-178-01	PLATE, LIGHT GUIDE			
	2-649-179-01	SHEET (LCD)			
	2-665-175-01	SHEET (REFLECTOR)			
		< CAPACITOR >			
C301	1-164-156-11	CERAMIC CHIP	0.1uF		25V
C302	1-126-964-11	ELECT	10uF	20%	50V
C303	1-126-964-11	ELECT	10uF	20%	50V
C304	1-164-156-11	CERAMIC CHIP	0.1uF		25V
C305	1-126-964-11	ELECT	10uF	20%	50V
C306	1-104-655-91	ELECT	470uF	20%	6.3V
C307	1-104-655-91	ELECT	470uF	20%	6.3V
C308	1-100-566-91	CERAMIC CHIP	0.1uF	10%	25V
C309	1-126-965-91	ELECT	22uF	20%	50V
C310	1-164-156-11	CERAMIC CHIP	0.1uF		25V
C311	1-164-156-11	CERAMIC CHIP	0.1uF		25V
C312	1-164-156-11	CERAMIC CHIP	0.1uF		25V
C313	1-115-467-11	CERAMIC CHIP	0.22uF	10%	10V
C314	1-165-176-11	CERAMIC CHIP	0.047uF	10%	16V
C315	1-165-176-11	CERAMIC CHIP	0.047uF	10%	16V
C316	1-165-176-11	CERAMIC CHIP	0.047uF	10%	16V
C317	1-162-964-11	CERAMIC CHIP	0.001uF	10%	50V
C319	1-162-919-11	CERAMIC CHIP	22PF	5%	50V
C320	1-162-919-11	CERAMIC CHIP	22PF	5%	50V
C321	1-164-156-11	CERAMIC CHIP	0.1uF		25V
C325	1-165-176-11	CERAMIC CHIP	0.047uF	10%	16V
C326	1-165-176-11	CERAMIC CHIP	0.047uF	10%	16V
C327	1-165-176-11	CERAMIC CHIP	0.047uF	10%	16V
C328	1-165-176-11	CERAMIC CHIP	0.047uF	10%	16V
C330	1-164-156-11	CERAMIC CHIP	0.1uF		25V
C332	1-162-970-11	CERAMIC CHIP	0.01uF	10%	25V
C340	1-165-176-11	CERAMIC CHIP	0.047uF	10%	16V
C341	1-164-156-11	CERAMIC CHIP	0.1uF		25V
C342	1-164-156-11	CERAMIC CHIP	0.1uF		25V
C343	1-126-965-91	ELECT	22uF	20%	50V

Ref. No.	Part No.	Description	Remark
		< CONNECTOR >	
CN301	1-779-564-21	CONNECTOR, FFC (LIF (NON-ZIF)) 27P	
CN302	1-784-735-11	CONNECTOR, FFC 13P	
		< DIODE >	
D301	6-501-722-01	DIODE MAZ8043GMLS0	
D302	8-719-404-50	DIODE MA111-TX	
D303	8-719-000-07	DIODE MC2836	
D304	8-719-404-50	DIODE MA111-TX	
D305	8-719-404-50	DIODE MA111-TX	
		< IC >	
IC301	6-807-577-01	IC MB90803PF-G-130E1	
IC302	6-600-349-31	IC NJL24H400A	
		< JUMPER RESISTOR >	
JR301	1-216-864-11	SHORT CHIP 0	
JR302	1-216-296-11	SHORT CHIP 0	
JR303	1-216-296-11	SHORT CHIP 0	
JR304	1-216-296-11	SHORT CHIP 0	
JR305	1-216-296-11	SHORT CHIP 0	
JR306	1-216-864-11	SHORT CHIP 0	
JR307	1-216-296-11	SHORT CHIP 0	
JR308	1-216-296-11	SHORT CHIP 0	
JR309	1-216-296-11	SHORT CHIP 0	
JR310	1-216-864-11	SHORT CHIP 0	
JR311	1-216-864-11	SHORT CHIP 0	
JR312	1-216-296-11	SHORT CHIP 0	
JR313	1-216-864-11	SHORT CHIP 0	
JR314	1-216-296-11	SHORT CHIP 0	
JR315	1-216-296-11	SHORT CHIP 0	
JR316	1-216-296-11	SHORT CHIP 0	
JR317	1-216-296-11	SHORT CHIP 0	
JR318	1-216-296-11	SHORT CHIP 0	
JR319	1-216-864-11	SHORT CHIP 0	
JR320	1-216-296-11	SHORT CHIP 0	
JR321	1-216-296-11	SHORT CHIP 0	
		< LIQUID CRYSTAL DISPLAY >	
LCD301	1-805-973-11	DISPLAY PANEL, LIQUID CRYSTAL	
		< LED >	
LED301	6-501-479-01	DIODE 1L0341Y23E0CA602 (BACK LIGHT)	
		< TRANSISTOR >	
Q301	8-729-120-28	TRANSISTOR 2SC1623-L5L6	
Q302	8-729-037-13	TRANSISTOR KTA1271Y	
Q303	8-729-120-28	TRANSISTOR 2SC1623-L5L6	
Q304	8-729-120-28	TRANSISTOR 2SC1623-L5L6	
Q305	8-729-120-28	TRANSISTOR 2SC1623-L5L6	
Q306	8-729-038-28	TRANSISTOR RT1N441C-TP-1	
Q307	8-729-600-22	TRANSISTOR 2SA1235-F	
Q308	8-729-038-28	TRANSISTOR RT1N441C-TP-1	
Q309	8-729-040-76	TRANSISTOR KTA1273-Y-AT	
Q310	8-729-120-28	TRANSISTOR 2SC1623-L5L6	
Q311	8-729-024-43	TRANSISTOR 2SA1365-T112-1EF	
Q312	8-729-024-43	TRANSISTOR 2SA1365-T112-1EF	
Q313	8-729-024-43	TRANSISTOR 2SA1365-T112-1EF	
Q314	8-729-024-43	TRANSISTOR 2SA1365-T112-1EF	
Q315	8-729-047-62	TRANSISTOR 2SC3440-T12-1F	
Q316	8-729-047-62	TRANSISTOR 2SC3440-T12-1F	
Q317	8-729-047-62	TRANSISTOR 2SC3440-T12-1F	
Q318	8-729-047-62	TRANSISTOR 2SC3440-T12-1F	
		< RESISTOR >	
R301	1-216-809-11	METAL CHIP 100 5% 1/10W	
R302	1-216-809-11	METAL CHIP 100 5% 1/10W	
R303	1-216-809-11	METAL CHIP 100 5% 1/10W	
R304	1-216-809-11	METAL CHIP 100 5% 1/10W	
R305	1-216-809-11	METAL CHIP 100 5% 1/10W	
R306	1-216-809-11	METAL CHIP 100 5% 1/10W	
R307	1-216-809-11	METAL CHIP 100 5% 1/10W	
R308	1-216-809-11	METAL CHIP 100 5% 1/10W	
R309	1-216-809-11	METAL CHIP 100 5% 1/10W	
R310	1-216-809-11	METAL CHIP 100 5% 1/10W	
R311	1-216-809-11	METAL CHIP 100 5% 1/10W	
R312	1-216-809-11	METAL CHIP 100 5% 1/10W	
R313	1-216-809-11	METAL CHIP 100 5% 1/10W	
R314	1-216-809-11	METAL CHIP 100 5% 1/10W	
R315	1-216-809-11	METAL CHIP 100 5% 1/10W	
R316	1-216-809-11	METAL CHIP 100 5% 1/10W	
R317	1-216-809-11	METAL CHIP 100 5% 1/10W	
R318	1-216-809-11	METAL CHIP 100 5% 1/10W	
R319	1-216-809-11	METAL CHIP 100 5% 1/10W	
R320	1-216-809-11	METAL CHIP 100 5% 1/10W	
R321	1-216-809-11	METAL CHIP 100 5% 1/10W	
R322	1-216-809-11	METAL CHIP 100 5% 1/10W	
R323	1-216-809-11	METAL CHIP 100 5% 1/10W	
R324	1-216-809-11	METAL CHIP 100 5% 1/10W	
R325	1-216-797-11	METAL CHIP 10 5% 1/10W	
R326	1-216-809-11	METAL CHIP 100 5% 1/10W	
R327	1-216-809-11	METAL CHIP 100 5% 1/10W	
R328	1-216-833-11	METAL CHIP 10K 5% 1/10W	
R329	1-216-825-11	METAL CHIP 2.2K 5% 1/10W	
R330	1-216-819-11	METAL CHIP 680 5% 1/10W	
R331	1-216-845-11	METAL CHIP 100K 5% 1/10W	
R332	1-216-833-11	METAL CHIP 10K 5% 1/10W	
R333	1-216-845-11	METAL CHIP 100K 5% 1/10W	
R334	1-216-833-11	METAL CHIP 10K 5% 1/10W	
R335	1-216-833-11	METAL CHIP 10K 5% 1/10W	
R336	1-216-833-11	METAL CHIP 10K 5% 1/10W	
R337	1-216-864-11	SHORT CHIP 0	
R338	1-216-789-11	METAL CHIP 2.2 5% 1/10W	
R339	1-216-789-11	METAL CHIP 2.2 5% 1/10W	
R340	1-216-829-11	METAL CHIP 4.7K 5% 1/10W	
R341	1-216-839-11	METAL CHIP 33K 5% 1/10W	
R342	1-216-849-11	METAL CHIP 220K 5% 1/10W	
R343	1-216-853-11	METAL CHIP 470K 5% 1/10W	
R344	1-216-826-11	METAL CHIP 2.7K 5% 1/10W	
R345	1-216-829-11	METAL CHIP 4.7K 5% 1/10W	
R346	1-216-841-11	METAL CHIP 47K 5% 1/10W	
R347	1-216-817-11	METAL CHIP 470 5% 1/10W	

Ref. No.	Part No.	Description			Remark
R348	1-216-841-11	METAL CHIP	47K	5%	1/10W
R349	1-216-817-11	METAL CHIP	470	5%	1/10W
R350	1-216-841-11	METAL CHIP	47K	5%	1/10W
R351	1-216-817-11	METAL CHIP	470	5%	1/10W
R352	1-216-841-11	METAL CHIP	47K	5%	1/10W
R353	1-216-817-11	METAL CHIP	470	5%	1/10W
R354	1-216-841-11	METAL CHIP	47K	5%	1/10W
R355	1-216-817-11	METAL CHIP	470	5%	1/10W
R356	1-216-817-11	METAL CHIP	470	5%	1/10W
R357	1-216-841-11	METAL CHIP	47K	5%	1/10W
R358	1-216-841-11	METAL CHIP	47K	5%	1/10W
R359	1-216-817-11	METAL CHIP	470	5%	1/10W
R360	1-216-817-11	METAL CHIP	470	5%	1/10W
R361	1-216-841-11	METAL CHIP	47K	5%	1/10W
R362	1-216-837-11	METAL CHIP	22K	5%	1/10W
R363	1-216-837-11	METAL CHIP	22K	5%	1/10W
R364	1-216-837-11	METAL CHIP	22K	5%	1/10W
R365	1-216-837-11	METAL CHIP	22K	5%	1/10W
R366	1-216-837-11	METAL CHIP	22K	5%	1/10W
R367	1-216-837-11	METAL CHIP	22K	5%	1/10W
R368	1-216-837-11	METAL CHIP	22K	5%	1/10W
R369	1-216-821-11	METAL CHIP	1K	5%	1/10W
R370	1-216-821-11	METAL CHIP	1K	5%	1/10W
R371	1-216-821-11	METAL CHIP	1K	5%	1/10W
R372	1-216-821-11	METAL CHIP	1K	5%	1/10W
R373	1-216-821-11	METAL CHIP	1K	5%	1/10W
R374	1-216-821-11	METAL CHIP	1K	5%	1/10W
R375	1-216-821-11	METAL CHIP	1K	5%	1/10W
R376	1-216-837-11	METAL CHIP	22K	5%	1/10W
R377	1-216-837-11	METAL CHIP	22K	5%	1/10W
R378	1-216-841-11	METAL CHIP	47K	5%	1/10W
R379	1-216-845-11	METAL CHIP	100K	5%	1/10W
R380	1-216-817-11	METAL CHIP	470	5%	1/10W
R381	1-216-833-11	METAL CHIP	10K	5%	1/10W
R382	1-216-833-11	METAL CHIP	10K	5%	1/10W
R383	1-216-833-11	METAL CHIP	10K	5%	1/10W
R384	1-216-833-11	METAL CHIP	10K	5%	1/10W
R385	1-216-821-11	METAL CHIP	1K	5%	1/10W
R386	1-216-821-11	METAL CHIP	1K	5%	1/10W
R387	1-216-821-11	METAL CHIP	1K	5%	1/10W
R388	1-216-864-11	SHORT CHIP	0 (US, CND)		
R389	1-216-829-11	METAL CHIP	4.7K	5%	1/10W (EC77: EXCEPT US, CND)
R389	1-216-833-11	METAL CHIP	10K	5%	1/10W (EC77: US, CND/GX99)
R389	1-216-837-11	METAL CHIP	22K	5%	1/10W (EC55: EXCEPT US, CND)
R390	1-216-821-11	METAL CHIP	1K	5%	1/10W (EC55: US, CND/EC77: US, CND)
R390	1-216-827-11	METAL CHIP	3.3K	5%	1/10W (GX99)
R390	1-216-841-11	METAL CHIP	47K	5%	1/10W (EC77: EXCEPT US, CND)
R390	1-216-845-11	METAL CHIP	100K	5%	1/10W (EC55: EXCEPT US, CND)
R392	1-216-833-11	METAL CHIP	10K	5%	1/10W (EXCEPT AEP, UK)
R393	1-216-821-11	METAL CHIP	1K	5%	1/10W (AEP, UK, RU)
R393	1-216-825-11	METAL CHIP	2.2K	5%	1/10W (MX)
R393	1-216-833-11	METAL CHIP	10K	5%	1/10W (E3, KR, SP)
R393	1-216-840-11	METAL CHIP	39K	5%	1/10W (E2)
R393	1-216-845-11	METAL CHIP	100K	5%	1/10W (E51, AR)
R393	1-218-867-11	METAL CHIP	6.8K	0.5%	1/10W (AUS)
R396	1-216-864-11	SHORT CHIP	0		
R397	1-216-817-11	METAL CHIP	470	5%	1/10W
R399	1-216-833-11	METAL CHIP	10K	5%	1/10W
R400	1-216-864-11	SHORT CHIP	0		
R401	1-216-864-11	SHORT CHIP	0		
R402	1-216-845-11	METAL CHIP	100K	5%	1/10W
R405	1-216-821-11	METAL CHIP	1K	5%	1/10W
R406	1-216-825-11	METAL CHIP	2.2K	5%	1/10W
R412	1-216-821-11	METAL CHIP	1K	5%	1/10W
R413	1-216-825-11	METAL CHIP	2.2K	5%	1/10W
R419	1-216-837-11	METAL CHIP	22K	5%	1/10W
R420	1-216-845-11	METAL CHIP	100K	5%	1/10W
R421	1-216-833-11	METAL CHIP	10K	5%	1/10W
		< SWITCH >			
S301	1-786-417-11	ENCODER, ROTARY (VOLUME)			
		< SWITCH >			
SW303	1-762-875-21	SWITCH, KEYBOARD (FUNCTION)			
SW304	1-762-875-21	SWITCH, KEYBOARD (CD ►II)			
SW305	1-762-875-21	SWITCH, KEYBOARD (TUNER/BAND)			
SW311	1-762-875-21	SWITCH, KEYBOARD (■)			
SW312	1-762-875-21	SWITCH, KEYBOARD (TUNING – I◁◁◀◀)			
SW313	1-762-875-21	SWITCH, KEYBOARD (TUNING + ►►▷▷I)			
		< VIBRATOR >			
X301	1-760-252-12	VIBRATOR, CRYSTAL (32.768kHz)			
X302	1-795-058-21	VIBRATOR, CERAMIC (5MHz)			

****

PT BOARD (EXCEPT EC55: US, CND)
****

		< CAPACITOR >			
C051	1-165-621-91	CERAMIC CHIP	0.1uF		50V
		< CONNECTOR >			
CN051	1-819-972-11	HOLDER, CABLE 8P			
		< DIODE >			
D051	6-500-334-01	DIODE MC2836-T112-1			
D052	6-500-335-01	DIODE MC2838-T112-1			
D055	6-500-335-01	DIODE MC2838-T112-1			
		< TRANSFORMER >			
⚠PT001	1-443-846-11	TRANSFORMER, POWER (EC77: US, CND/GX99)			
⚠PT001	1-443-912-11	TRANSFORMER, POWER (AEP, UK, RU)			

PT REG

Ref. No.	Part No.	Description	Remark
⚠PT001	1-445-105-11	TRANSFORMER, POWER (E2, E3, E51, MX, KR, AR, SP, AUS)	
		< RELAY >	
⚠RY001	1-755-334-11	RELAY, AC POWER (EC55: AEP, UK, RU/EC77: US, CND, AEP, RU/GX99)	
⚠RY002	1-755-496-11	RELAY (E2, E3, E51, MX, KR, AR, SP, AUS)	
		< SWITCH >	
⚠S001	1-786-408-11	SELECTOR, VOLTAGE (SWS-2301) (VOLTAGE SELECTOR)(E2, E3, E51, SP)	
**********			
		REG BOARD **********	
		< CAPACITOR >	
C629	1-100-566-91	CERAMIC CHIP 0.1uF 10% 25V	
		< IC >	
IC601	8-759-231-56	IC TA7809S	
**********			

MEMO

REVISION HISTORY

Clicking the version allows you to jump to the revised page.
Also, clicking the version at the top of the revised page allows you to jump to the next revised page.

Ver.	Date	Description of Revision
1.0	2007.01	New
1.1	2007.04	Addition of EC55: Korean, Argentine, Singapore and Australian models, EC77: Argentine and Australian models
		Addition of JACK board: C403, C404 (ECN-ECC16112)
		SUPPLEMENT-1: Board changed to suffix -13 from suffix -12. (ECN-ECC08790)
1.2	2007.07	Addition of Canadian model for EC55
		Board changed to suffix -14 from suffix -13 (EXCEPT BD90, PT (U) board) PT (U) board changed to suffix -12 from suffix -11 (ECN-ECC33648)
		Change of parts number for D121 on HI-AMP, LOW-AMP board, D301 on PANEL board, D618, D621, D622 on MAIN board (ECN-ECC16861)
		Change of part number for IC301 on PANEL board (ECN-ECC19267)
		Change of parts number for C622, C626, C677, C678 on MAIN board (ECN-ECC19303)
		Change of part number for Ref. No. 504 (ECN-ECC16936)