CX-JN77

SERVICE MANUAL

Ver 1.0 2004.04

AEP Model
UK Model
E Model

CX-JN77 is the amplifier, CD player, tape deck and tuner section in JAX-N77/PK77.

CD Section	Model Name Using Similar Mechanism	NEW
	CD Mechanism Type	CDM74-F1BD81
	Base Unit Name	BU-F1BD81A
	Optical Pick-up Block Name	KSM-215DCP
Tape deck Section	Model Name Using Similar Mechanism	NEW
	Tape Transport Mechanism Type	CWM43FR34

SPECIFICATIONS

Amplifier section

Chilean, Peruvian, Mexican models

DIN power output (rated): 100 + 100 watts (6 ohms at 1 kHz, DIN)
Continuous RMS power output (reference): 125 + 125 watts (6 ohms at 1 kHz, 10% THD)
Music power output (reference): 250 + 250 watts (6 ohms at 1 kHz, 10% THD)

AEP, UK, CIS models

The following measured at AC 120, 127, 220, 240 V 50/60 Hz
DIN power output (rated): 144 + 144 watts (6 ohms at 1 kHz, DIN)
Continuous RMS power output (reference): 180 + 180 watts (6 ohms at 1 kHz, 10% THD)

Inputs
VIDEO/MD IN (phono jacks): voltage 450/250 mV, impedance 47 kilohms
Outputs
PHONES (stereo mini jack): accepts headphones of 8 ohms or more
SPEAKER: accepts impedance of 6 to 16 ohms

CD player section

System: Compact disc and digital audio system
Laser: Semiconductor laser (λ=780 nm) Emission duration: continuous
Frequency response: 2 Hz – 20 kHz (±0.5 dB)
Signal-to-noise ratio: More than 90 dB
Dynamic range: More than 90 dB

Tape deck section

Recording system: 4-track 2-channel, stereo
Frequency response: 50 – 13,000 Hz (±3 dB), using Sony TYPE I cassettes

Tuner section

FM stereo, FM/AM superheterodyne tuner

FM tuner section

Tuning range
Russian models: 65.0 – 74.0 MHz (There is no stereo effect. 10-kHz step) 87.5 – 108.0 MHz (50-kHz step)
Other models: 87.5 – 108.0 MHz (50-kHz step)
Antenna: FM lead antenna
Antenna terminals: 75 ohms unbalanced
Intermediate frequency: 10.7 MHz

AM tuner section

Tuning range
Pan-American models: 530 – 1,710 kHz (with the tuning interval set at 10 kHz) 531 – 1,710 kHz (with the tuning interval set at 9 kHz)
European and Russian models: 531 – 1,602 kHz (with the tuning interval set at 9 kHz)
Antenna: AM loop antenna
Antenna terminals: External antenna terminal
Intermediate frequency: 450 kHz

– Continued on next page –

COMPACT DISC DECK RECEIVER

9-877-745-01 **Sony Corporation**
2004D05-1 **Home Audio Company**
© 2004.04
Published by Sony Engineering Corporation

General

Power requirements
European and Russian models:
230 V AC, 50/60 Hz
Mexican models: 127 V AC, 60 Hz
Other models: 120 V, 220 V or 230 – 240 V AC, 50/60 Hz Adjustable with voltage selector

Power consumption
European and Russian models:
180 watts
0.25 watts (at the Power Saving Mode)
Other models: 170 watts

Dimensions (w/h/d) incl. projecting parts and controls
Amplifier/Tuner/Tape/CD section:
Approx. 280 × 325 × 425 mm
Mass Approx. 9.9 kg

Design and specifications are subject to change without notice.

SAFETY-RELATED COMPONENT WARNING!!

COMPONENTS IDENTIFIED BY MARK ⚠ OR DOTTED LINE WITH MARK ⚠ ON THE SCHEMATIC DIAGRAMS AND IN THE PARTS LIST ARE CRITICAL TO SAFE OPERATION. REPLACE THESE COMPONENTS WITH SONY PARTS WHOSE PART NUMBERS APPEAR AS SHOWN IN THIS MANUAL OR IN SUPPLEMENTS PUBLISHED BY SONY.

Notes on chip component replacement

- Never reuse a disconnected chip component.
- Notice that the minus side of a tantalum capacitor may be damaged by heat.

Flexible Circuit Board Repairing

- Keep the temperature of the soldering iron around 270 °C during repairing.
- Do not touch the soldering iron on the same conductor of the circuit board (within 3 times).
- Be careful not to apply force on the conductor when soldering or unsoldering.

CAUTION
Use of controls or adjustments or performance of procedures other than those specified herein may result in hazardous radiation exposure.

This appliance is classified as a CLASS 1 LASER product. The CLASS 1 LASER PRODUCT MARKING is located on the rear exterior.

UNLEADED SOLDER

Boards requiring use of unleaded solder are printed with the lead-free mark (LF) indicating the solder contains no lead.
(Caution: Some printed circuit boards may not come printed with the lead free mark due to their particular size)

: LEAD FREE MARK

Unleaded solder has the following characteristics.

- Unleaded solder melts at a temperature about 40 °C higher than ordinary solder.
  Ordinary soldering irons can be used but the iron tip has to be applied to the solder joint for a slightly longer time.
  Soldering irons using a temperature regulator should be set to about 350 °C.
  Caution: The printed pattern (copper foil) may peel away if the heated tip is applied for too long, so be careful!
- Strong viscosity
  Unleaded solder is more viscou-s (sticky, less prone to flow) than ordinary solder so use caution not to let solder bridges occur such as on IC pins, etc.
- Usable with ordinary solder
  It is best to use only unleaded solder but unleaded solder may also be added to ordinary solder.

TABLE OF CONTENTS

1. SERVICING NOTES 4

2. GENERAL
Location of Controls 7

3. DISASSEMBLY
3-1. Disassembly Flow 9
3-2. Case (Side-L/R) 10
3-3. Case (Top) 10
3-4. Tray Panel 11
3-5. CD Mechanism Deck (CDM74-F1BD81) 11
3-6. Front Panel Block 12
3-7. Back Panel Section 12
3-8. MAIN Board 13
3-9. Tape Mechanism Deck (CWM43FR34) 13
3-10. Table Assy 14
3-11. MOTOR (TB) Board 14
3-12. MOTOR (LD) Board 15
3-13. Base Unit (BU-F1BD81A) 15
3-14. CD Board 16

4. TEST MODE 17

5. ELECTRICAL ADJUSTMENTS
CD Section 21

6. DIAGRAMS
6-1. Block Diagram – SERVO Section – 22
6-2. Block Diagram – MAIN Section – 23
6-3. Block Diagram – PANEL/POWER SUPPLY Section – 24
6-4. Note for Printed Wiring Boards and Schematic Diagrams 25
6-5. Printed Wiring Board – CD Board – 26
6-6. Schematic Diagram – CD Board – 27
6-7. Printed Wiring Boards – CHANGER Section – 28
6-8. Schematic Diagram – CHANGER Section – 29
6-9. Printed Wiring Boards – CDMP3 CONNECT/TRANSLATION Boards – 30
6-10. Schematic Diagram – CDMP3 CONNECT/TRANSLATION Boards – 31
6-11. Schematic Diagram – MAIN Section (1/4) – 32
6-12. Schematic Diagram – MAIN Section (2/4) – 33
6-13. Schematic Diagram – MAIN Section (3/4) – 34
6-14. Schematic Diagram – MAIN Section (4/4) – 35
6-15. Printed Wiring Boards – MAIN Section – 36
6-16. Printed Wiring Board – PANEL Section – 37
6-17. Schematic Diagram – PANEL Section (1/2) – 38
6-18. Schematic Diagram – PANEL Section (2/2) – 39
6-19. Printed Wiring Board – POWER AMP Section – (AEP, UK, CIS only) 40
6-20. Schematic Diagram – POWER AMP Section – (AEP, UK, CIS only) 41
6-21. Printed Wiring Board – POWER AMP Section – (E51, MX only) 42
6-22. Schematic Diagram – POWER AMP Section – (E51, MX only) 43
6-23. Printed Wiring Boards – TRANS Section – (AEP, UK, CIS only) 44
6-24. Schematic Diagram – TRANS Section – (AEP, UK, CIS only) 45
6-25. Printed Wiring Boards – TRANS Section – (E51, MX only) 46
6-26. Schematic Diagram – TRANS Section – (E51, MX only) 47

7. EXPLODED VIEWS
7-1. Case Section 58
7-2. Tape Mechanism Deck Section (CWM43FR34) 59
7-3. Cassette Box Section 60
7-4. Front Panel Section 61
7-5. Back Panel Section 62
7-6. Chassis Section 63
7-7. CD Mechanism Deck Section-1 (CDM74-F1BD81) 64
7-8. CD Mechanism Deck Section-2 (CDM74-F1BD81) 65
7-9. CD Mechanism Deck Section-3 (CDM74-F1BD81) 66
7-10. Base Unit Section (BU-F1BD81A) 67

8. ELECTRICAL PARTS LIST 68

- Abbreviation
  E51 : Chilean and Peruvian models
  MX : Mexican model

SECTION 1
SERVICING NOTES

NOTES ON HANDLING THE OPTICAL PICK-UP BLOCK OR BASE UNIT

The laser diode in the optical pick-up block may suffer electrostatic break-down because of the potential difference generated by the charged electrostatic load, etc. on clothing and the human body.
During repair, pay attention to electrostatic break-down and also use the procedure in the printed matter which is included in the repair parts.
The flexible board is easily damaged and should be handled with care.

NOTES ON LASER DIODE EMISSION CHECK

The laser beam on this model is concentrated so as to be focused on the disc reflective surface by the objective lens in the optical pick-up block. Therefore, when checking the laser diode emission, observe from more than 30 cm away from the objective lens.

LASER DIODE AND FOCUS SEARCH OPERATION CHECK

Carry out the “S curve check” in “CD section adjustment” and check that the S curve waveforms is output three times.

- **MODEL IDENTIFICATION**

– Rear View –

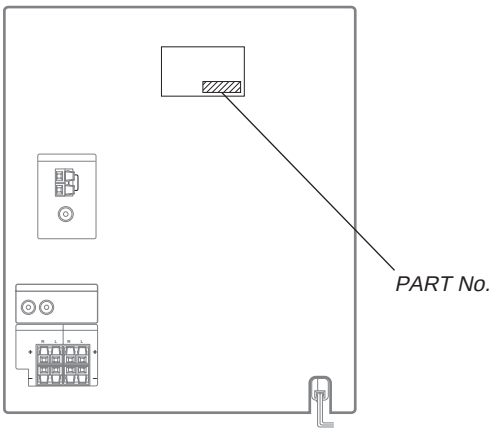

MODEL	PART No.
AEP, UK models	4-253-949-0□
CIS model	4-253-950-0□
Chilean and Peruvian models	4-253-951-0□
Mexican model	4-255-500-0□

HOW TO OPEN THE DISC TRAY WHEN POWER SWITCH TURNS OFF.

❶ *Remove the case (side-L).*

❷ *Turn the loading gear in the direction of arrow Ⓐ.*

❸ *Pull-out the disc tray.*

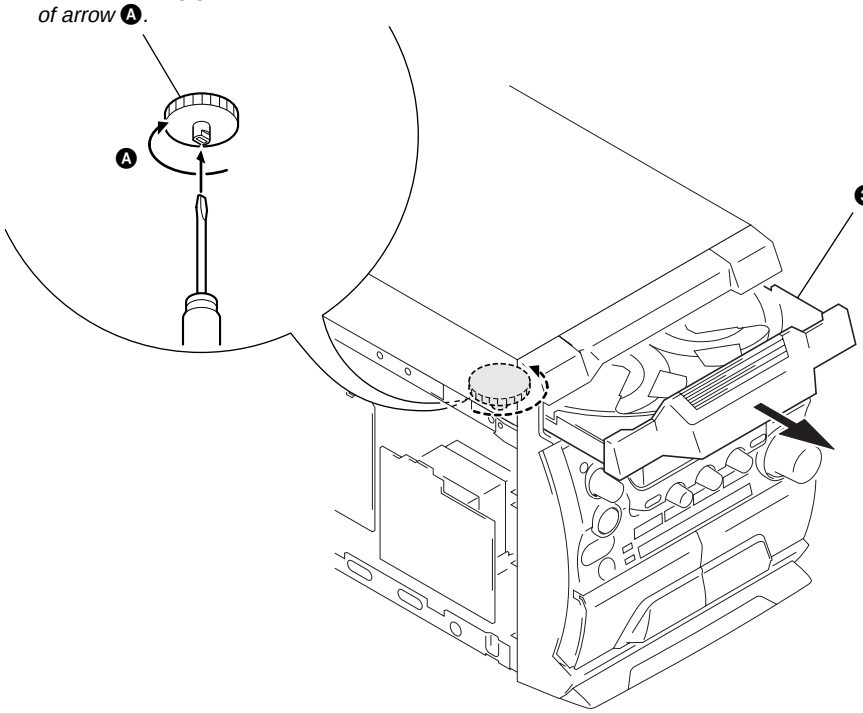

SERVICE POSITION
– CD MECHANISM DECK –

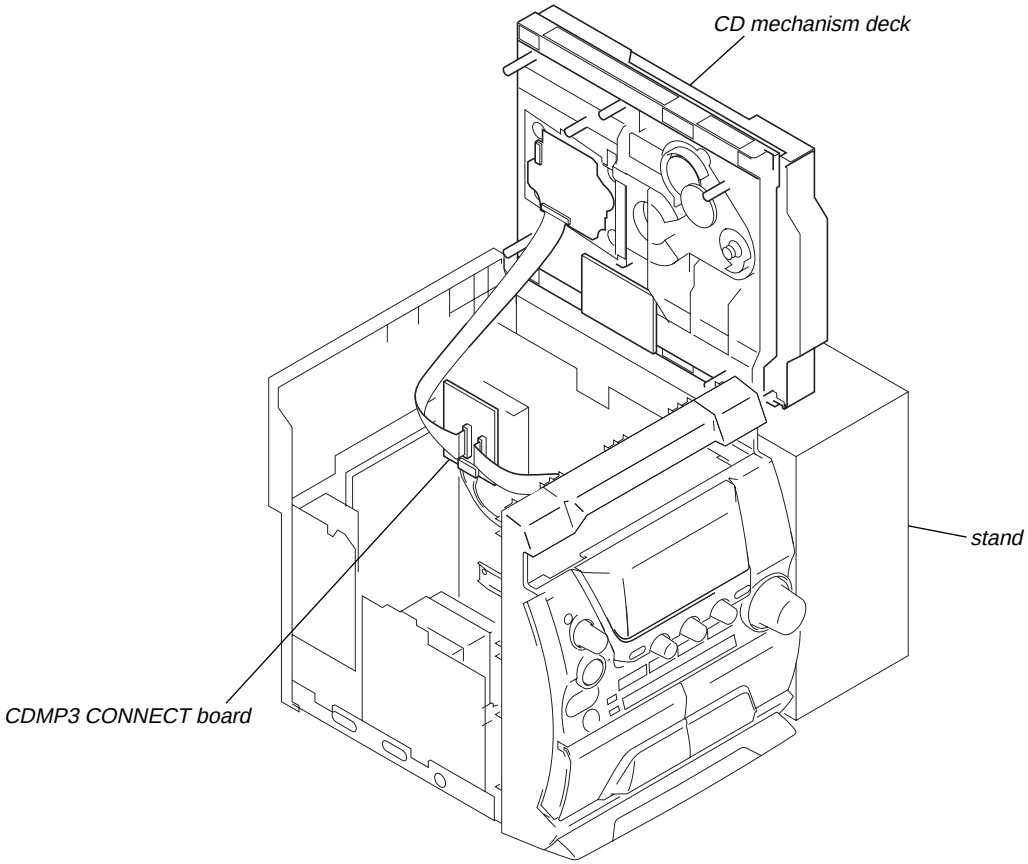

– FRONT PANEL SECTION –

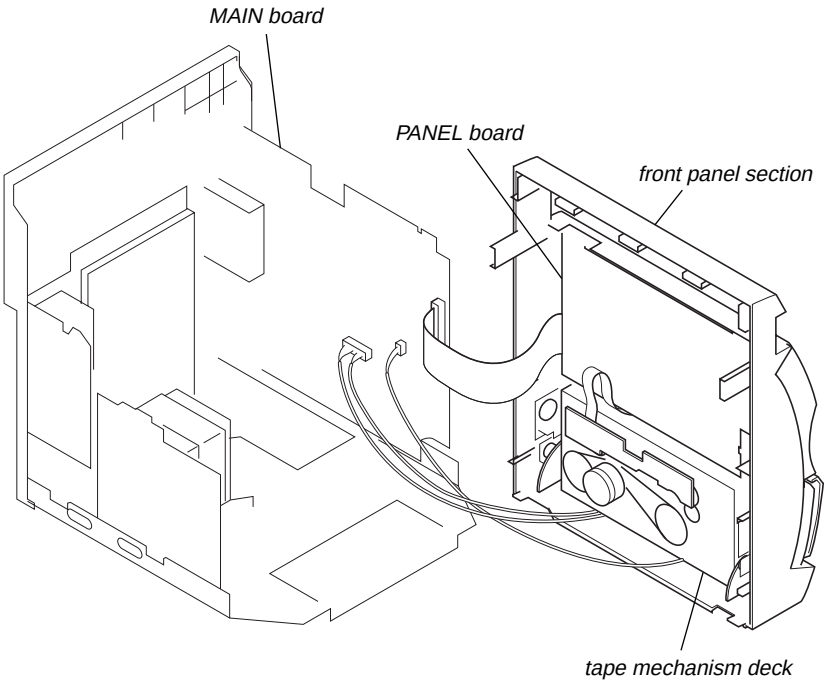

– AMP BOARD –

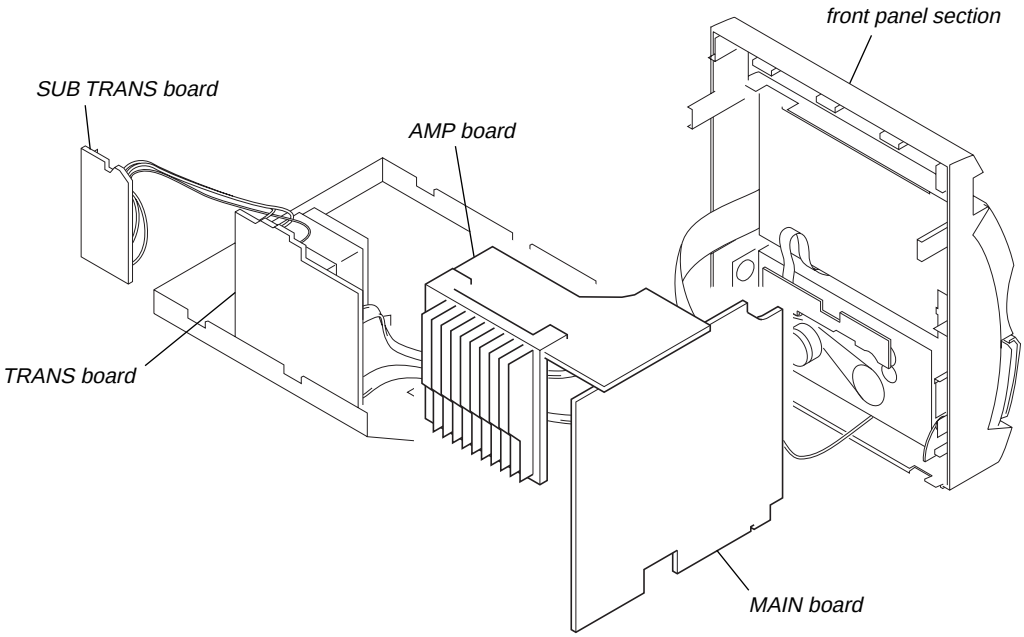

This section is extracted from instruction manual.

SECTION 2
GENERAL

• LOCATION OF CONTROLS

Main unit

ALPHABETICAL ORDER

A – N

ALBUM + 29
ALBUM – 29
BASS control 5
CD 16
CD SYNC 12
Deck A 9
Deck B 28
DISC 1 – 3 23
DISC SKIP/EX-CHANGE 24
Disc tray 22
DISPLAY 15
Display window 4
ENTER 2
i-Bass 13
MIDDLE control 5

O – Z

Operation Dial (AMS/TUNING) 14
P FILE 6
PHONES jack 11
PLAY MODE 20
PRESET EQ 3
REC PAUSE/START 8
Remote sensor 7
SURROUND 21
TAPE A/B 18
TREBLE control 5
TUNER/BAND 17
TUNING MODE 20
VIDEO/MD 19
VOLUME control 26

BUTTON DESCRIPTIONS

I/⏻ (power) 1
⏏ PUSH (deck A) (eject) 10
⏏ (eject) 25
PUSH ⏏ (deck B) (eject) 27
◀◀ (rewind) 29
■ (stop) 29
◁▷ (play) 29
❚❚ (pause) 29
▶▶ (fast forward) 29

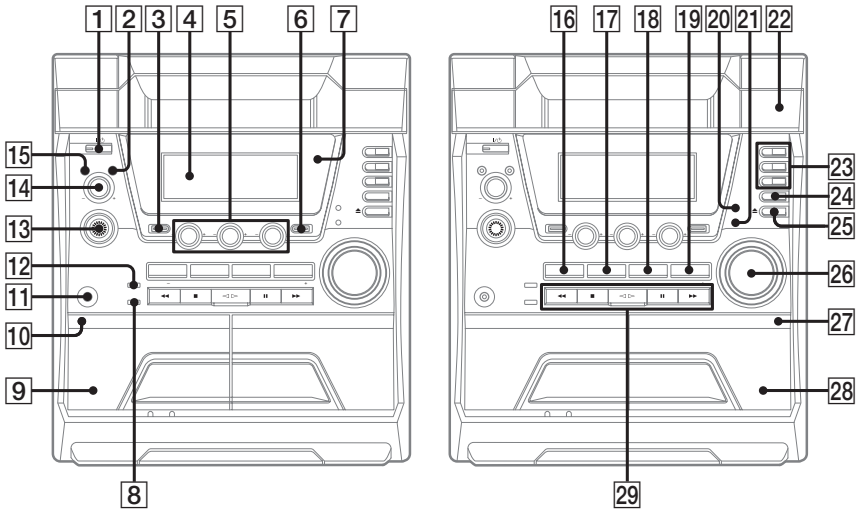

Remote control

ALPHABETICAL ORDER

A – E

ALBUM + 11
ALBUM – 13
CD 18
CLEAR 15
CLOCK/TIMER SELECT 2
CLOCK/TIMER SET 3
DISC SKIP 10
DISPLAY 21
ENTER 9
EQ 14

F – Z

FM MODE 4
FUNCTION 6
PLAY MODE 20
REPEAT 4
SLEEP 22
TAPE 17
TUNER BAND 5
TUNER MEMORY 19
TUNING MODE 20
VOLUME +/– 12

BUTTON DESCRIPTIONS

I/⏻ (power) 1
◀◀/▶▶ (rewind/fast forward) 7
► (play) 8
❚❚ (pause) 8
■ (stop) 8
–/+ (tuning) 16
|◀◀/▶▶| (go back/go forward) 16

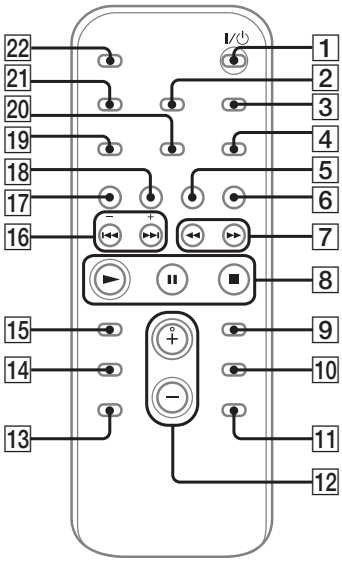

Setting the clock

Use buttons on the remote for the operation.

1 Press I/⏻ to turn on the system.

2 Press CLOCK/TIMER SET.

3 Press |◀◀ or ▶▶| repeatedly to set the hour.

4 Press ENTER.

5 Press |◀◀ or ▶▶| repeatedly to set the minute.

6 Press ENTER.

The clock starts working.

To adjust the clock

1 Press CLOCK/TIMER SET.

2 Press |◀◀ or ▶▶| repeatedly to select "CLOCK SET", then press ENTER.

3 Do the same procedures as step 3 to 6 above.

Notes

- The clock settings are canceled when you disconnect the power cord or if a power failure occurs.
- You cannot set the clock in Power Saving Mode.

SECTION 3
DISASSEMBLY

• This set can be disassembled in the order shown below.

3-1. DISASSEMBLY FLOW

Note 1: *The process described in ▣ can be performed in any order.*

Note 2: *Without completing the process described in ▣, the next process can not be performed.*

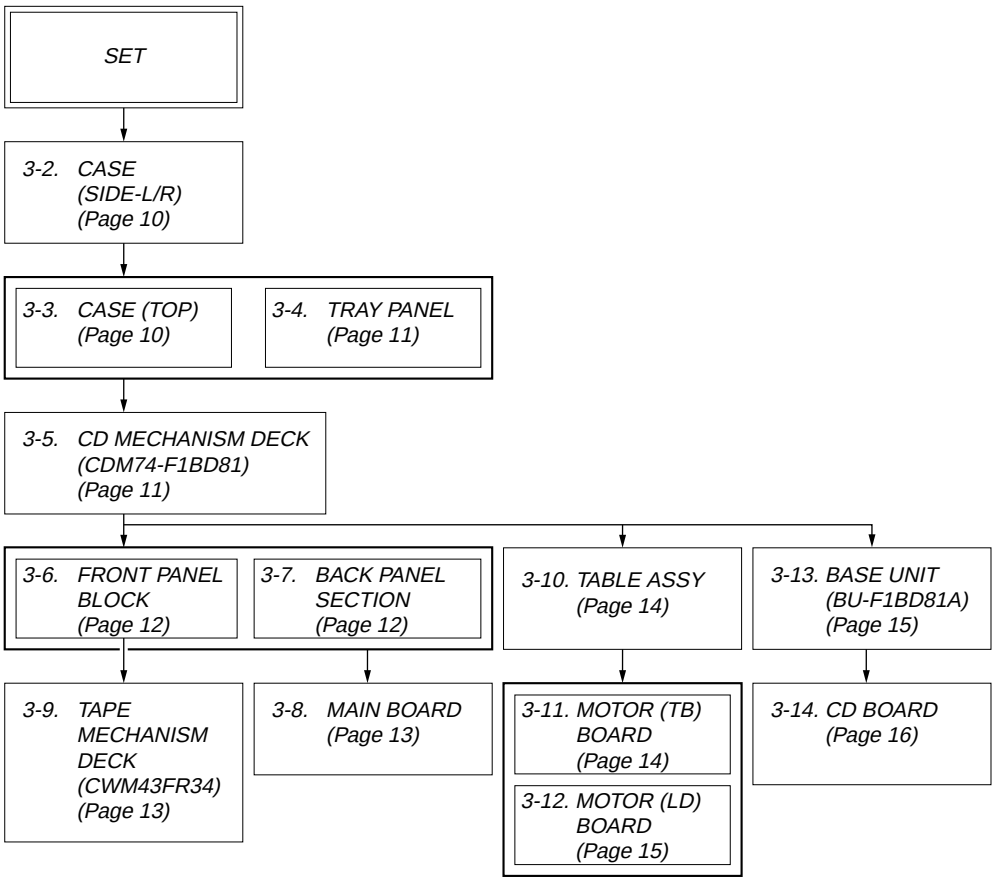

Note: Follow the disassembly procedure in the numerical order given.

3-2. CASE (SIDE-L/R)

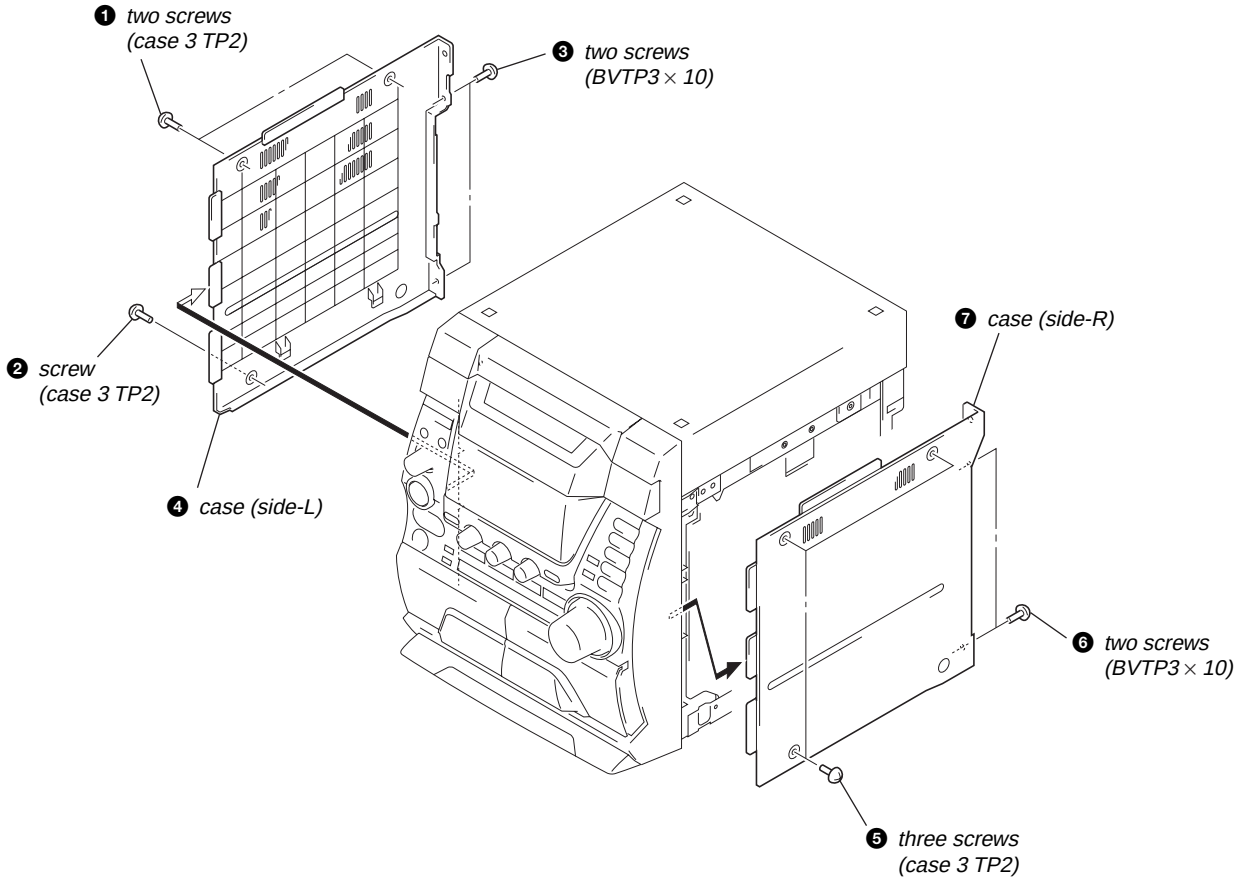

3-3. CASE (TOP)

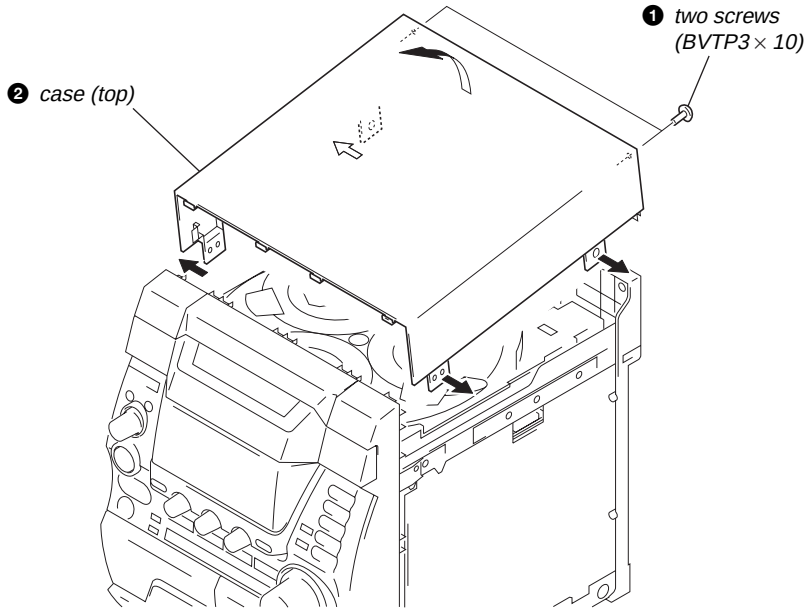

3-4. TRAY PANEL

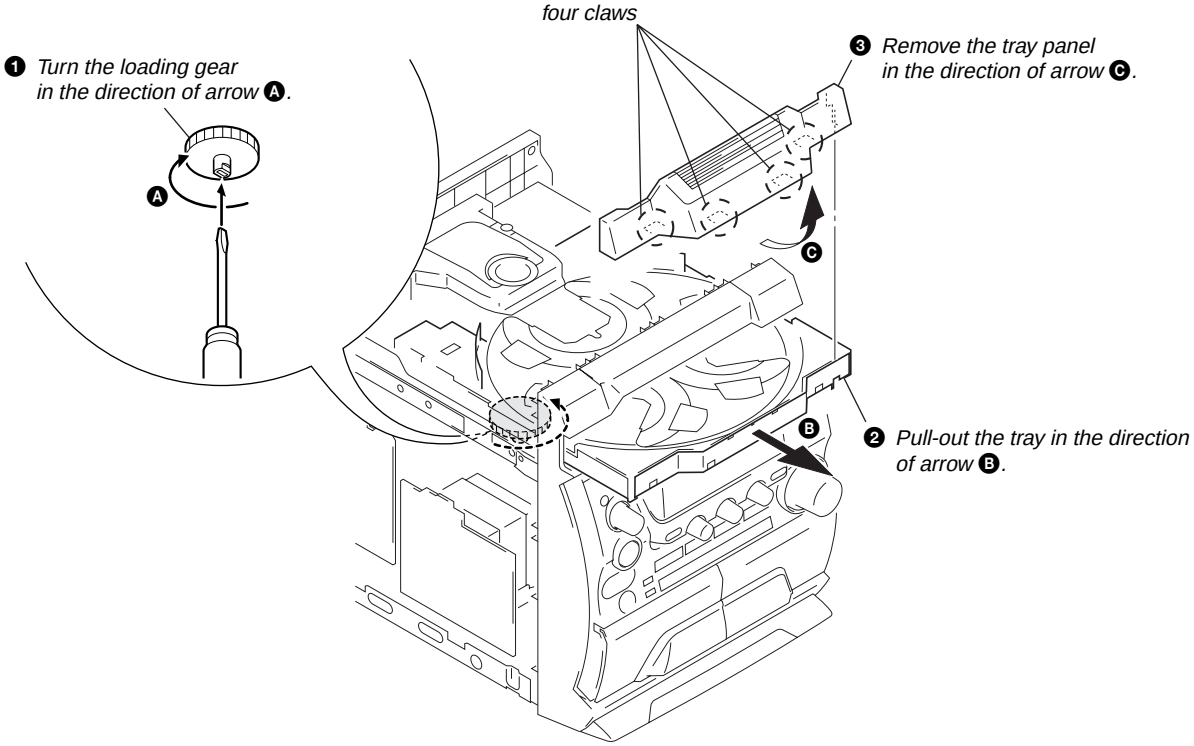

3-5. CD MECHANISM DECK (CDM74-F1BD81)

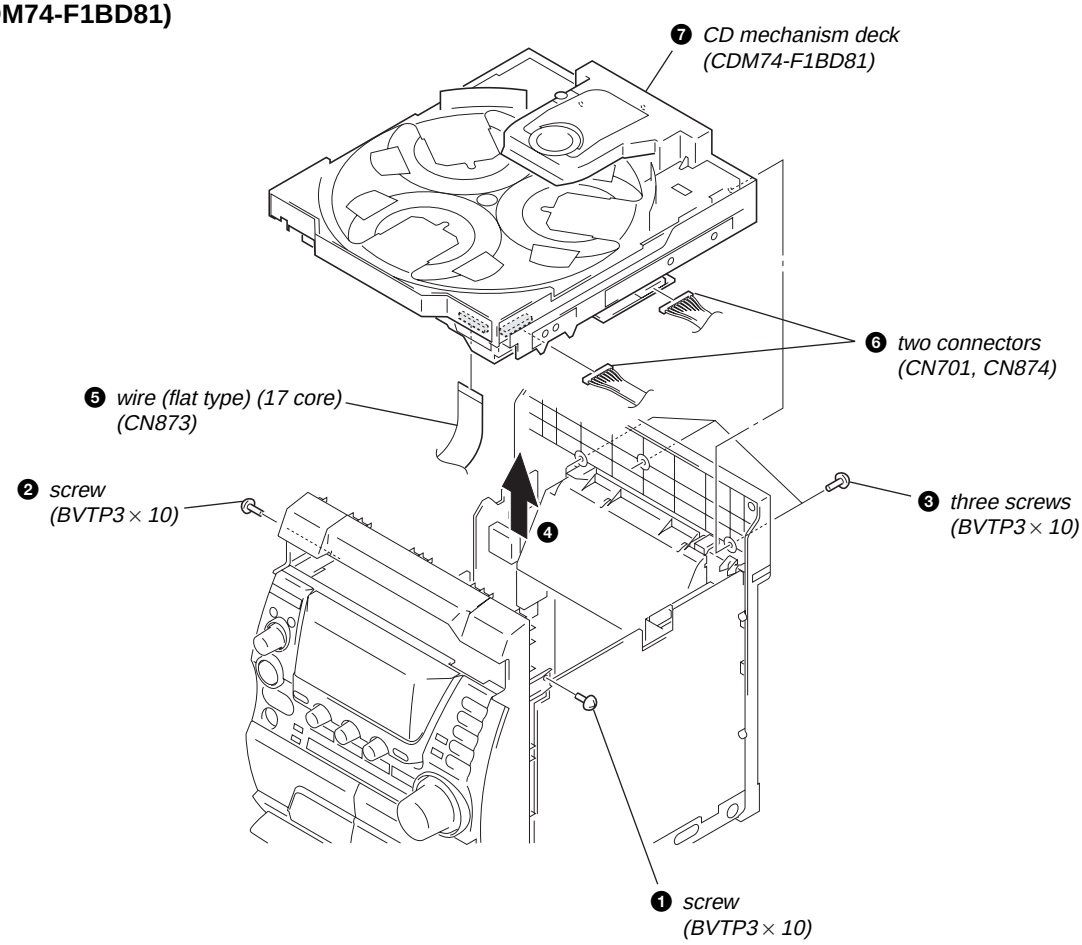

3-6. FRONT PANEL BLOCK

- *Abbreviation*
  E51 : Chilean and Peruvian models
  MX : Mexican model

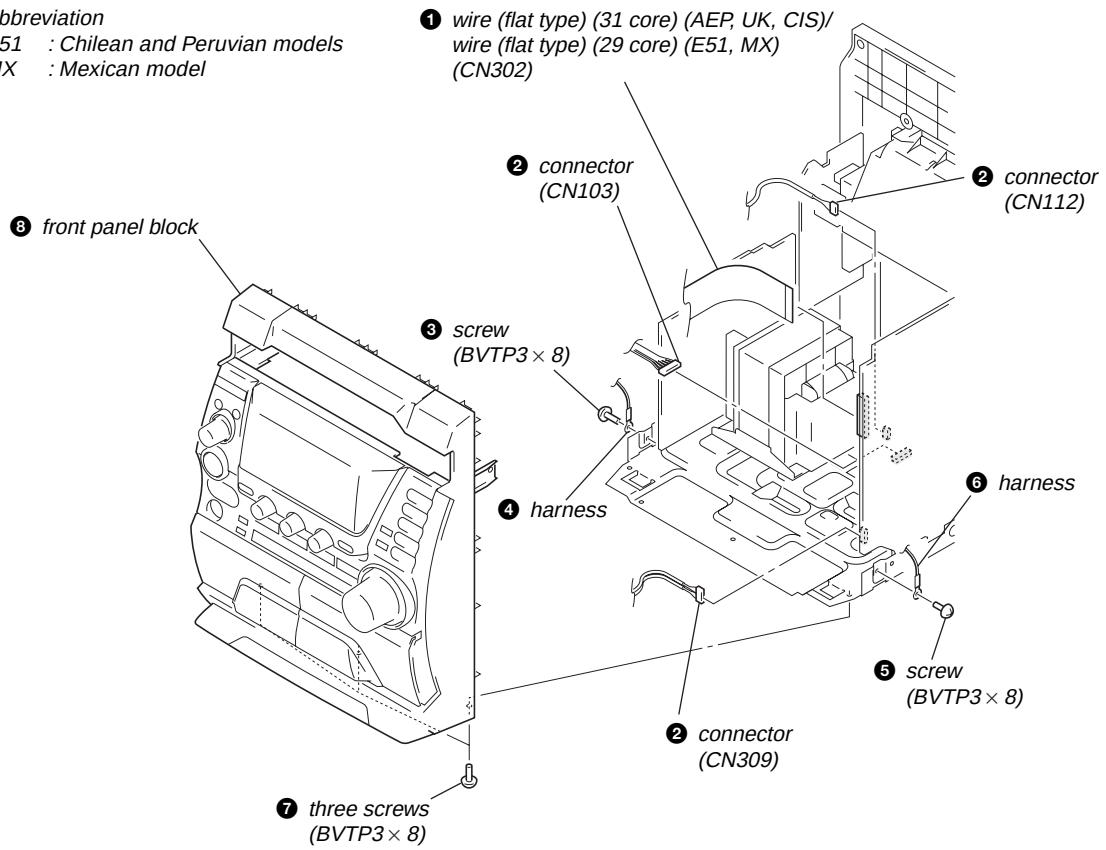

3-7. BACK PANEL SECTION

- *Abbreviation*
  E51 : Chilean and Peruvian models
  MX : Mexican model

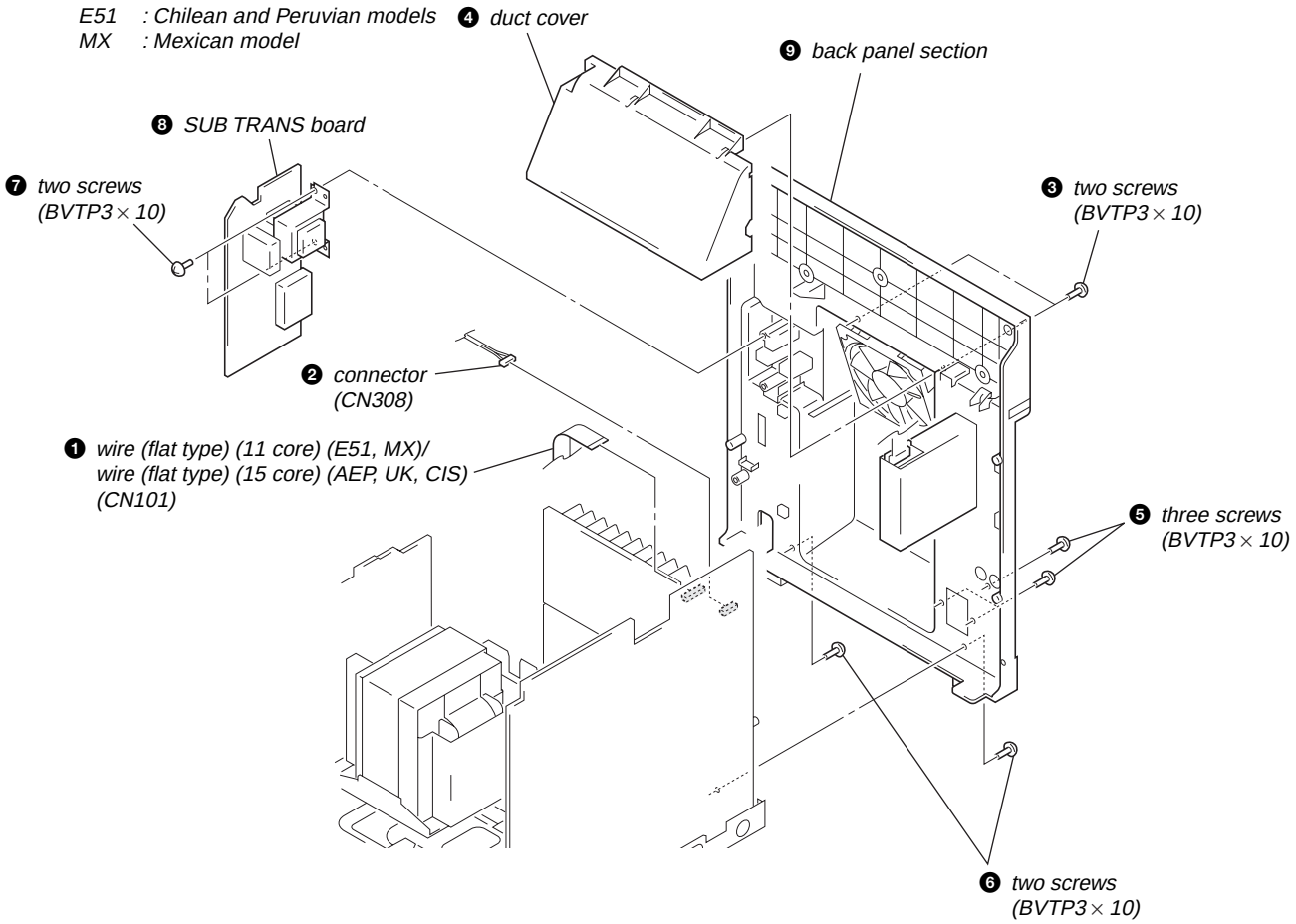

3-8. MAIN BOARD

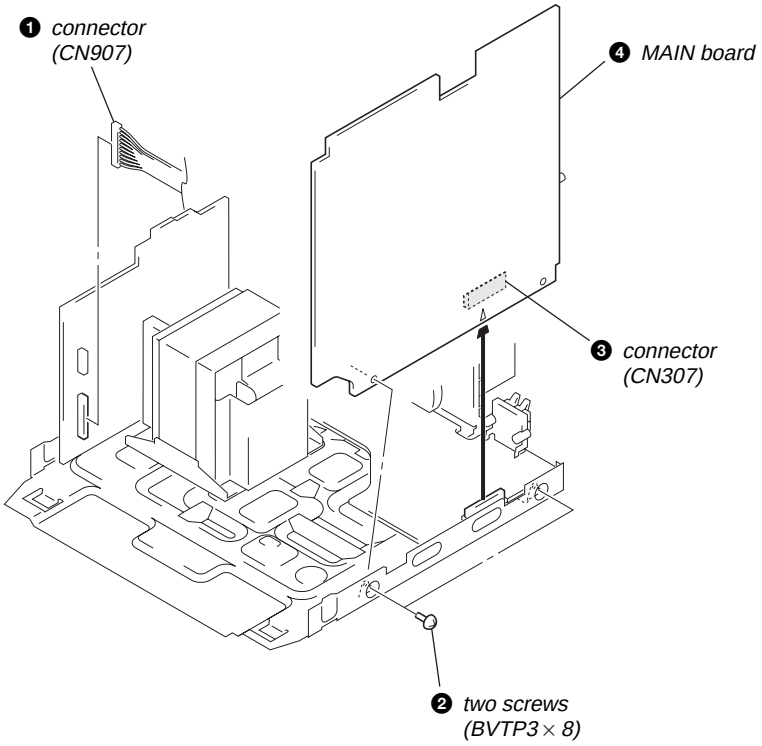

3-9. TAPE MECHANISM DECK (CWM43FR34)

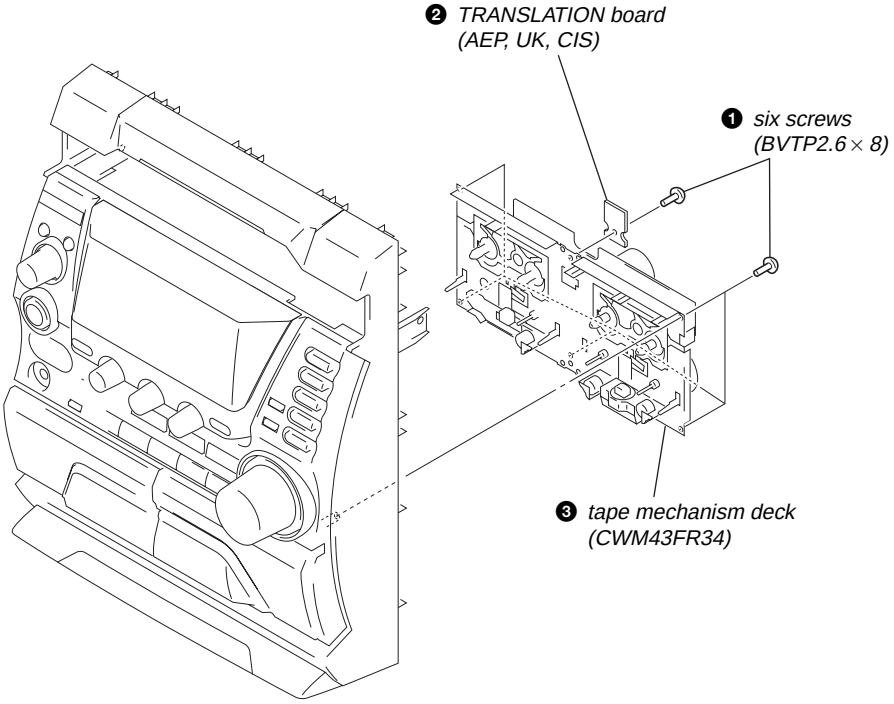

3-10. TABLE ASSY

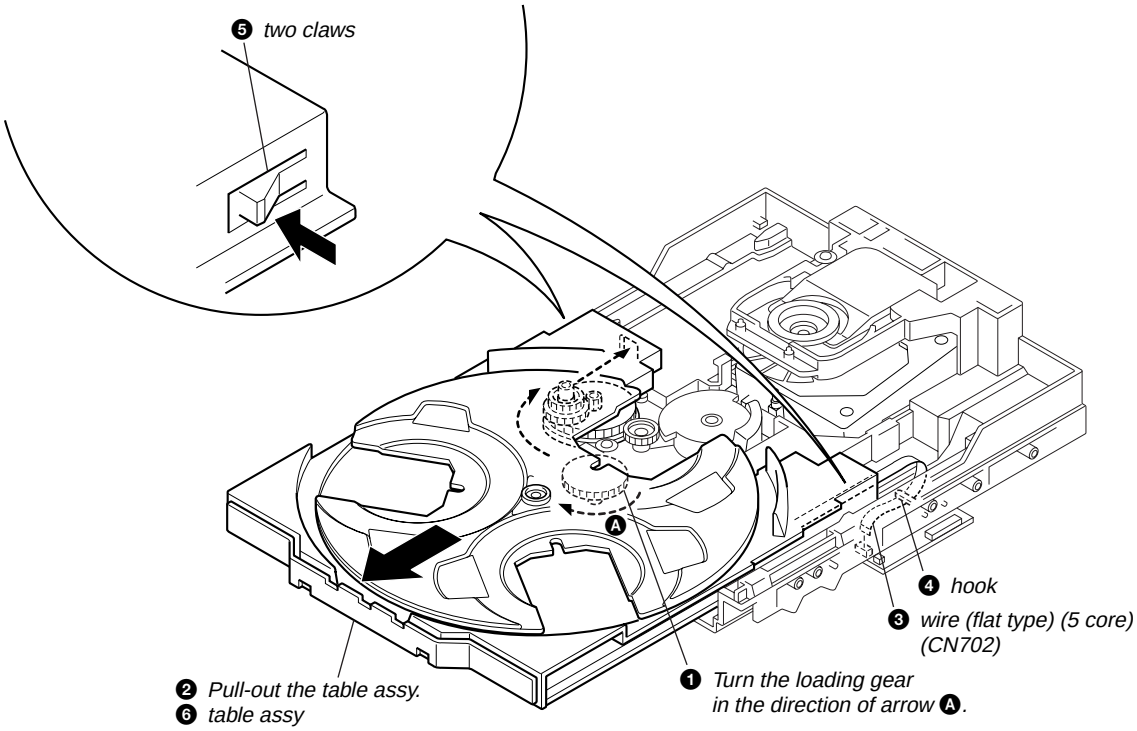

3-11. MOTOR (TB) BOARD

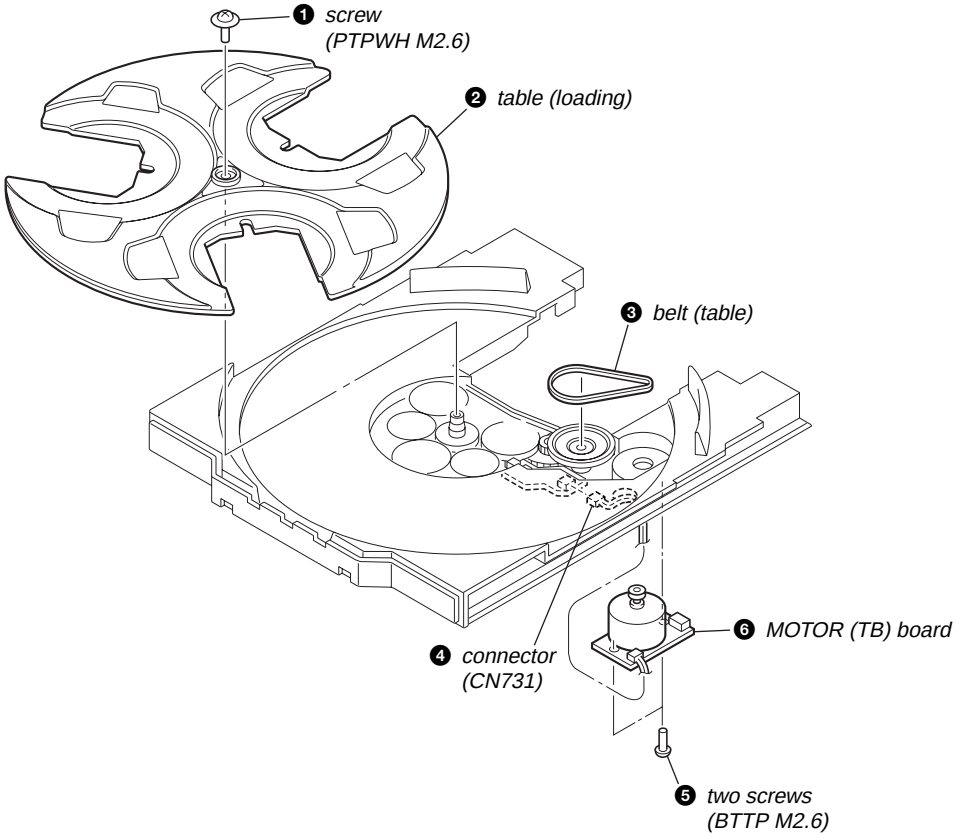

3-12. MOTOR (LD) BOARD

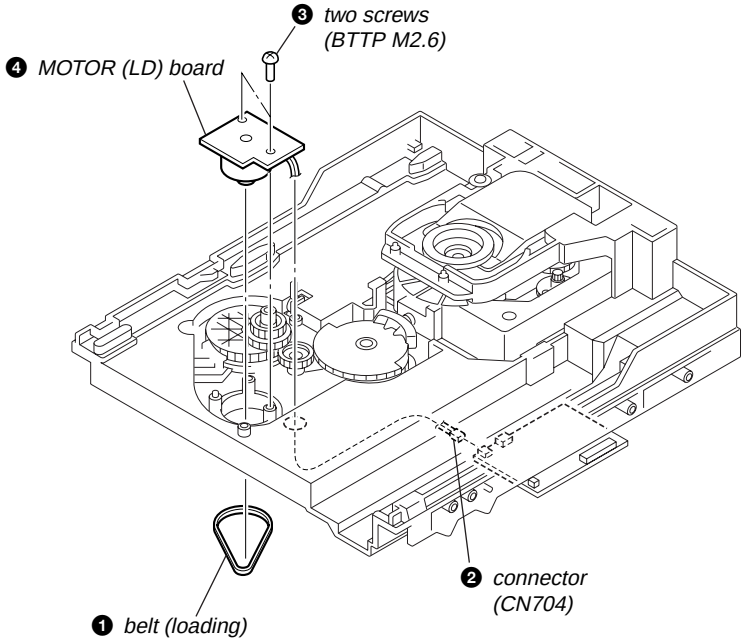

3-13. BASE UNIT (BU-F1BD81A)

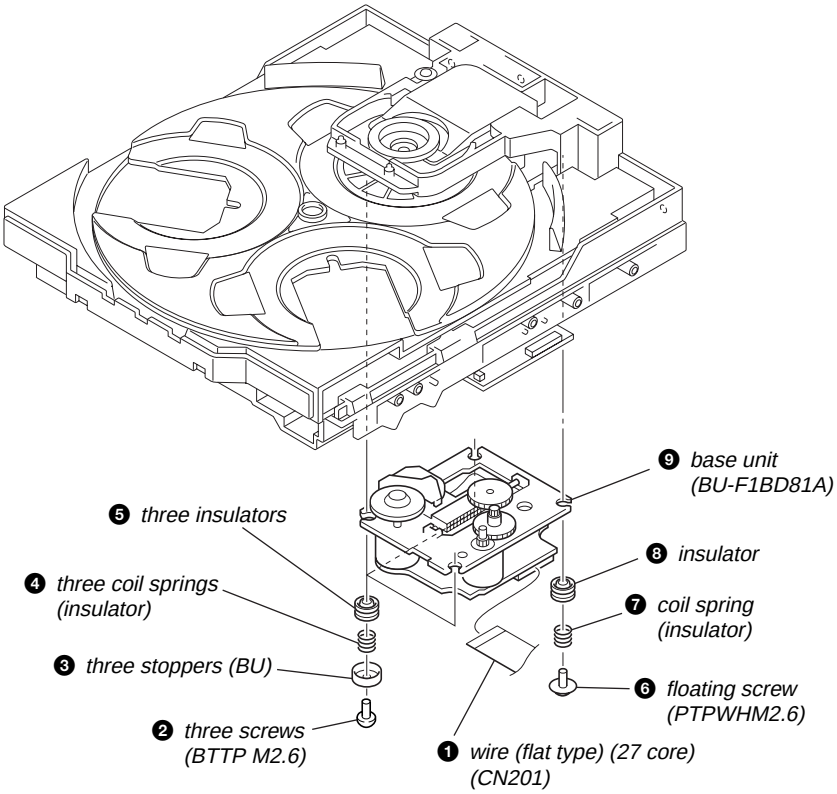

3-14. CD BOARD

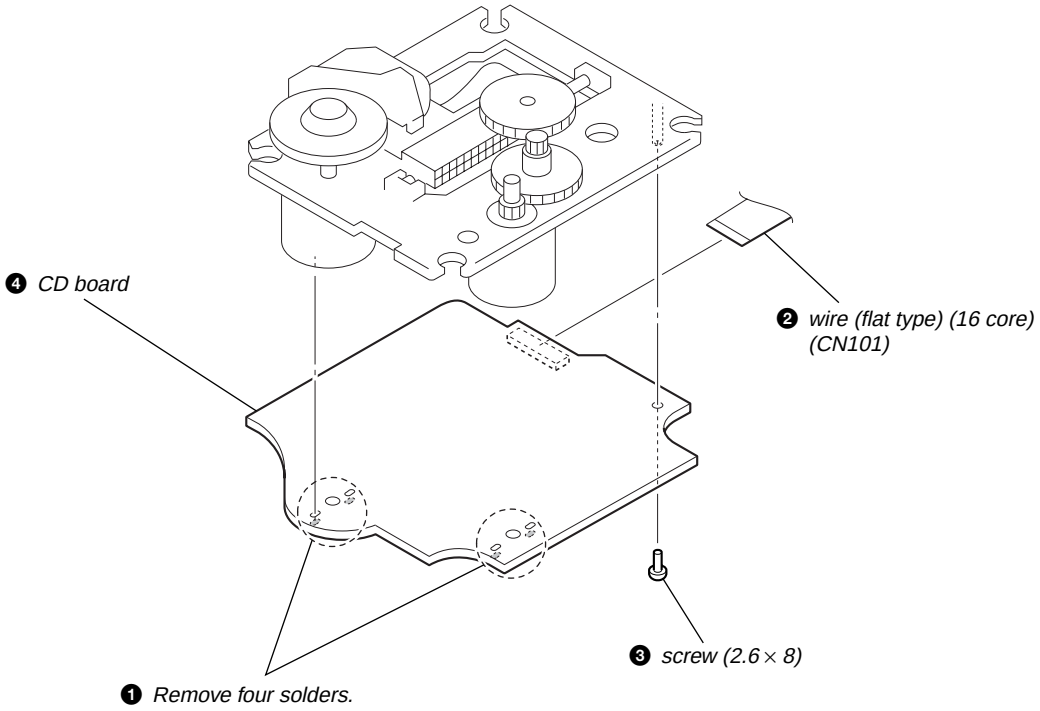
❹ CD board
❷ wire (flat type) (16 core)
(CN101)
❸ screw (2.6 × 8)
❶ Remove four solders.

SECTION 4
TEST MODE

MC COLD RESET

- The cold reset clears all data including preset data stored in the RAM to initial conditions. Execute this mode when returning the set to the customer.

Procedure:

1. Press the I/⏻ button to turn the power ON.
2. Press three buttons of ■ , P FILE and DISC 1 simultaneously.
3. The message "COLD RESET" is displayed on the fluorescent indicator tube momentarily, then becomes standby states.

TUNER STEP CHANGE-OVER (Except AEP, UK, CIS)

- A step of AM channels can be changed over between 9 kHz and 10 kHz.

Procedure:

1. Press the I/⏻ button to turn the power ON.
2. Press the TUNER/BAND button to select "AM".
3. Press the I/⏻ button to turn the power OFF.
4. Press two buttons of PLAY MODE/TUNING MODE and I/⏻ simultaneously.
5. The message "AM 9K STEP" or "AM 10K STEP" is displayed on the fluorescent indicator tube, and thus the channel step is changed over.

CD SHIP (LOCK) MODE

- This mode moves the optical pick-up to the position durable to vibration. Use this mode when returning the set to the customer after repair.

Procedure:

1. Press the I/⏻ button to turn the power ON.
2. Press the CD button to select "CD".
3. Press two buttons of CD and POWER simultaneously.
4. The message "LOCK" is displayed on the fluorescent indicator tube, and the CD ship mode is set.

CD SHIP (LOCK) MODE & COLD RESET

- This mode is used to perform CD chip (lock) mode and cold reset simultaneously.

Procedure:

1. Press the I/⏻ button to turn the power ON.
2. Press the CD button to select "CD".
3. Press three buttons of ■ , CD and DISPLAY simultaneously.
4. The message "COLD RESET" is displayed on the fluorescent indicator tube momentarily, then becomes standby states.

CHANGE-OVER FUNCTION OF MD/VIDEO

- This mode is used to enable function of external input to change over between MD and VIDEO.

Procedure:

1. Press the I/⏻ button to turn the power ON.
2. Press two buttons of VIDEO (MD) and I/⏻ simultaneously.
3. The message "MD" or "VIDEO"is displayed on the fluorescent indicator tube, and the function of external input is changed over.

CD TRAY LOCK MODE

- This mode is used to unable to take sample disc out of tray in the shop.

Procedure:

1. Press the I/⏻ button to turn the power ON.
2. Press the CD button to select "CD".
3. Set disc on the CD tray, press two buttons of ■ and ⏏ for 5 seconds.
4. The message "LOCKED" is displayed on the fluorescent indicator tube and the CD tray is locked. (Even if pressing the ⏏ button, the message "LOCKED" is displayed on the fluorescent indicator tube and the CD tray is locked)
5. To release from this mode, press two buttons of ■ and ⏏ for 5 seconds.
6. The message "UNLOCKED" is displayed on the fluorescent indicator tube and the CD tray is unlocked.

AMP TEST MODE

- This mode is used to display the parameter of amplifier IC and display the VACS status.

Procedure:

1. Press the I/⏻ button to turn the power ON.
2. Press three buttons of ■ , P FILE and PLAY MODE/TUNING MODE simultaneously.
3. When the AMP test mode is activated, the message "AMP TEST IN" is displayed on the fluorescent indicator tube momentarily, then amplifier adjustment mode is displayed on the fluorescent indicator tube.
4. Press the DISPLAY button to changed over between VACS status display mode and the amplifier IC parameter display mode.
5. In the amplifier IC parameter display mode, press the i-BASS button to changed over DBFB ON/OFF, and when it is ON, the character "D" is displayed on the fluorescent indicator tube.
6. In the amplifier IC parameter display mode, press the SURROUND button to changed over surround ON/OFF, and when it is ON, the character "S" is displayed on the fluorescent indicator tube.
7. In the amplifier IC parameter display mode, turn each knob of BASS, MIDDLE and TREBLE causes respective parameters to be changed, as well as change-over of the display on the fluorescent indicator tube.

AGING MODE

- This mode can be used for operation check of CD section and tape deck section.
  CD section and tape deck section work in parallel.

If an error occurred:
The aging operation stops only an error occurred sections and display then status.

If no error occurs:
The aging operation continues repeatedly.

Procedure:
1. Press the I/⏻ button to turn the power ON.
2. Press the CD button to select "CD".
3. Set disc on the CD tray and set tape into the deck.
4. Press three buttons of ■ , P FILE and DISC SKIP/EX-CHANGE simultaneously.
5. Aging operations of CD and tape are started at the same time.
6. To release from this mode, press the I/⏻ button to turn the power OFF and press the function buttons.

1. Display at the Aging Mode

Display operating state of CD section and tape deck section alternately.
If an error occurred, stop display which that section.

2. CD Section

The sequence during the aging mode is following as below.
Display at the aging mode is the same as the normal operation.

Aging mode sequence (CD section) :

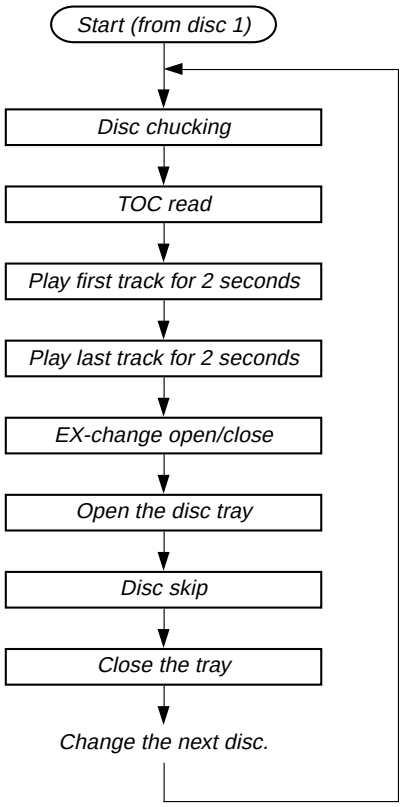

3. Tape Deck Section

The sequence during the aging mode is following as below.
If an error occurred, stop display that step.

Aging mode sequence (tape deck section) :

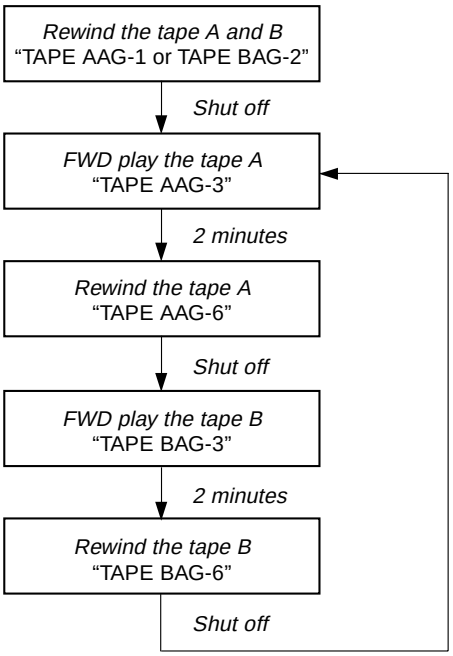

Note: "TAPE ∗AG-∗" is display of each step.

PANEL TEST MODE

- This mode is used to check the fluorescent indicator tube, LEDs and buttons.

Procedure:
1. Press the I/⏻ button to turn the power ON.
2. Press three buttons of ■ , P FILE and ENTER simultaneously.
3. Fluorescent indicator tube and LEDs are all turned ON.
4. Press two buttons of ❚❚ and ENTER simultaneously, mode is changed over.
5. In the key check mode, press each key, the defined key number of every each key list is displayed on the fluorescent indicator tube.
6. In the key count check mode, "KEYCNT 0" is displayed on the fluorescent indicator tube. Each time a key is pressed, "K" value increases. However, once a key is pressed, it is no longer taken into account.
7. In the headphone input check mode, connect the headphone, the message "H_P ON" is displayed on the fluorescent indicator tube, and disconnect the headphone, the message "H_P OFF" is displayed on the fluorescent indicator tube.
8. In the volume check mode, "VOLUME FLAT" is displayed on the fluorescent indicator tube. Turn the VOLUME knob clockwise, the message "VOLUME UP" is displayed on the fluorescent indicator tube momentarily and turn the VOLUME knob counterclockwise, the message "VOLUME DOWN" is displayed on the fluorescent indicator tube momentarily.

MC TEST MODE

- This mode is used to check operations of microprocessor.

Procedure:

1. Press the I/⏻ button to turn the power ON.
2. Press three buttons of ■ , P FILE and DISC 3 simultaneously.
3. When the MC test mode is activated, VACS level is displayed on the fluorescent indicator tube momentarily.
4. Turn the AMS/TUNING knob clockwise, the message "ALL EQ MAX" is displayed on the fluorescent indicator tube momentarily and turn the AMS/TUNING knob counterclockwise, the message "ALL EQ MIN" is displayed on the fluorescent indicator tube momentarily.
5. Press the PRESET EQ button, the message "ALL EQ FLAT" is displayed on the fluorescent indicator tube momentarily.
6. Turn the VOLUME knob clockwise, the message "VOLUME MAX" is displayed on the fluorescent indicator tube momentarily and turn the VOLUME knob counterclockwise, the message "VOLUME MIN" is displayed on the fluorescent indicator tube momentarily.
7. Press the i-BASS button to changed over VACS ON/OFF.
8. When the REC PAUSE/START button is pressed twice with a tape set in the deck-B, the function is switched "MD" or "VIDEO" and recording starts. When the ◀◀ or ▶▶ button is pressed during recording, the tape is rewound back to the beginning of recording, the function is switched to "TAPE B", then playback starts.
9. When the CD SYNC key is pressed with the test tape (AMS-100, AMS-110A) in the deck, number of space between tunes is counted, then if AMS-110A is set, "OK" is displayed on the fluorescent indicator tube and if AMS-100 is set, "NG" is displayed on the fluorescent indicator tube.
10. Press the I/⏻ button to release from this mode, then cold reset is performed.

VERSION DISPLAY MODE

- This mode is used to check the model, destination and software version.

Procedure:

1. Press the I/⏻ button to turn the power ON.
2. Press three buttons of ■ , P FILE and DISC 2 simultaneously.
3. When this mode is activated, model and destination is displayed on the fluorescent indicator tube.
4. Press the DISPLAY button to changed over between software version and year, month, day of the software creation display mode and model and destination display mode.
5. To release from this mode, press three buttons of ■ , P FILE and DISC 2 simultaneously.

CD ERROR CODE DISPLAY MODE

- This mode can be used for error code display of CD section.

Procedure:

1. Press the I/⏻ button to turn the power ON.
2. Press the CD key to select "CD".
3. Press three buttons of ■ , CD and DISC 1 simultaneously.
4. When this mode is activated, mechanism deck error code is displayed on the fluorescent indicator tube.
5. Press the i-BASS button to changed over between optical pick-up error code display mode and mechanism deck error code mode.
6. Turn the AMS/TUNING knob to change over display of error history.

1. Mechanism Deck Error Code Mode

- When this mode is entered, mechanism deck error code is displayed with the 10-character format on the fluorescent indicator tube.

The first digit from the left indicates:

The first digit from the left indicates which mode the error history is. In the mechanism deck error code mode, "M" is displayed on the fluorescent indicator tube.

The second digit from the left indicates:
(Error history No. display)

The second digit from the left indicates which order the error history is. "1" indicates the latest error history, and each time the number increases by one, the error history goes back to one-previous error.

The third and 4th digit from the left indicates:
(Error status display)

The third and 4th digit from the left indicates which error status is indicated.

Display	Status
0 0	No error
0 8	Table operation time-out (Table does not move to the target position within the specified time)
1 6	In the chucking down operation, the operation was retried by the maximum number of times but the operation could not be completed
1 7	In the chucking up and down operation, the reverse recovery processing was attempted but it could not be recovered
1 8	In the chucking up operation, the operation was retried by the maximum number of times but the operation could not be completed
2 0	Loading operation time-out (Table does not move to the target position within the specified time)
2 2	As the chuck was in the ex-open status at the initialization, the closing was attempted but could not be completed

The 5th and 6th digit from the left indicates:
(Present status display)

The 5th and 6th digit from the left indicates which operating status when an error occurred is indicated.

Display	Status
0 1	Open completion status
0 2	From open status, the movement to chucking down position is under way
0 3	From chucking down position, the open operation is under way
0 4	Chucking down completion status
1 0	The chucking down operation is under way
1 1	The chucking up operation is under way
1 2	Close completion status
1 3	From close status, the ex-open operation is under way
1 4	From ex-open status, the close operation is under way
1 8	Ex-pen completion status

The 7th and 8th digit from the left indicates:
(Motor status display)
The 7th and 8th digit from the left indicates which motor output status when an error occurred is indicated.

Display	Status
× 0	No table motor output
× 1	Table motor forward output
× 2	Table motor backward output
× 3	Table motor break output
0 ×	No loading motor output
1 ×	Loading motor forward output
2 ×	Loading motor backward output
3 ×	Loading motor break output

The 9th and 10 th digit from the left indicates:
(Tray status display)
The 9th and 10th digit from the left indicates which target processing when an error occurred is indicated.

Display	Status
0 1	Open operation
1 2	Close operation
1 8	Ex-open operation

2. Optical Pick-up Error Code Mode

- When this mode is entered, optical pick-up error code is displayed with the 8-character format on the fluorescent indicator tube.

The first digit from the left indicates:
The first digit from the left indicates which mode the error history is. In the optical pick-up error code mode, “D” is displayed on the fluorescent indicator tube.

The second digit from the left indicates:
(Error history No. display)
The second digit from the left indicates which order the error history is. “1” indicates the latest error history, and each time the number increases by one, the error history goes back to one-previous error.

The third and 4th digit from the left indicates:
(Error status display)
The third and 4th digit from the left indicates which error status is indicated.

Display	Status
0 1	Not focused (TOC read without a disc)
0 2	GFS NG (TOC read with a disc chucked)
0 3	Start operation time-over
0 4	Defocused continuously (Defocused during TOC reading)
0 5	Q code not entered for specified time
0 6	Tracking not turned ON
0 7	Blank disc (Blank disc TOC read)

The 5th and 6th digit from the left indicates:
(Error step display)
The 5th and 6th digit from the left indicates which processing when a trouble occurred

Display	Contents
0 1	Power OFF in progress
0 2	Initialize in progress
0 3	Oscillation stopping
0 4	From oscillation stop, oscillation starting
0 5	Stopping
0 6	Stop operation is under way
0 7	Start operation in progress
0 8	TOC read in progress
0 9	Search operation is under way
0 A	Playback operation is under way
0 B	Pause operation is under way
0 C	Playback manual search operation is under way
0 D	Pause manual search operation is under way
0 E	—

The 7th and 8th digit from the left indicates:
The 7th and 8th digit from the left indicates which operation in progress when a trouble occurred. (Step of each processing of the 5th and 6th digits is indicated)

5 REPEAT LIMIT CANCEL MODE

- Number of repeat for CD playback is 5 times when the repeat mode is “REPEAT”. This mode is used to enables CD to repeat playback for limitless times.

Procedure:
1. Press the [I/⏻] button to turn the power ON.
2. Press the [CD] button to select “CD”.
3. Press three buttons of [■] , [CD] and [ENTER] simultaneously.
4. The message “LIMIT OFF” is displayed on the fluorescent indicator tube momentarily, CD repeat 5 limit is cancelled.

SECTION 5
ELECTRICAL ADJUSTMENTS

CD SECTION

Note:
1. CD Block is basically designed to operate without adjustment. Therefore, check each item in order given.
2. Use YEDS-18 (3-702-101-01) unless otherwise indicated.
3. Use an oscilloscope with more than 10MΩ impedance.
4. Clean the object lens by an applicator with neutral detergent when the signal level is low than specified value with the following checks.

S-CURVE CHECK

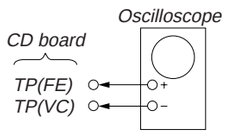

Procedure :
1. Connect an oscilloscope to TP (FE) and TP (VC) on the CD board.
2. Press the I/⏻ button to turn the power ON.
3. Load a disc (YEDS-18) and actuate the focus search. (In consequence of open and close the disc tray, actuate the focus search)
4. Confirm that the oscilloscope waveform (S-curve) is symmetrical between A and B. And confirm peak to peak level within 3 ± 0.5 Vp-p.

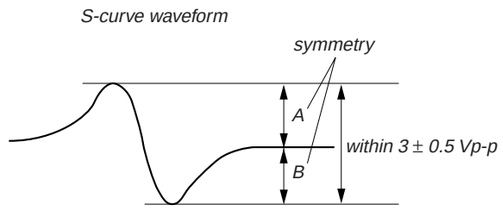

Note:
- Try to measure several times to make sure than the ratio of A : B or B : A is more than 10 : 7.
- Take sweep time as long as possible and light up the brightness to obtain best waveform.

Connecting Location: CD board

RFAC LEVEL CHECK

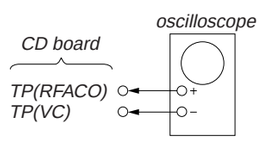

Procedure :
1. Connect an oscilloscope to TP (RFACO) and TP (VC) on the CD board.
2. Press the I/⏻ button to turn the power ON.
3. Load a disc (YEDS-18) and playback.
4. Confirm that oscilloscope waveform is clear and check if RFAC signal level is correct or not.

Note: Clear RFAC signal waveform means that the shape " ◊ " can be clearly distinguished at the center of the waveform.

Connecting Location: CD board

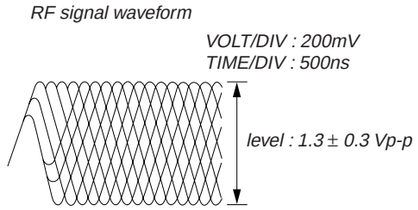

– CD BOARD (Conductor Side) –

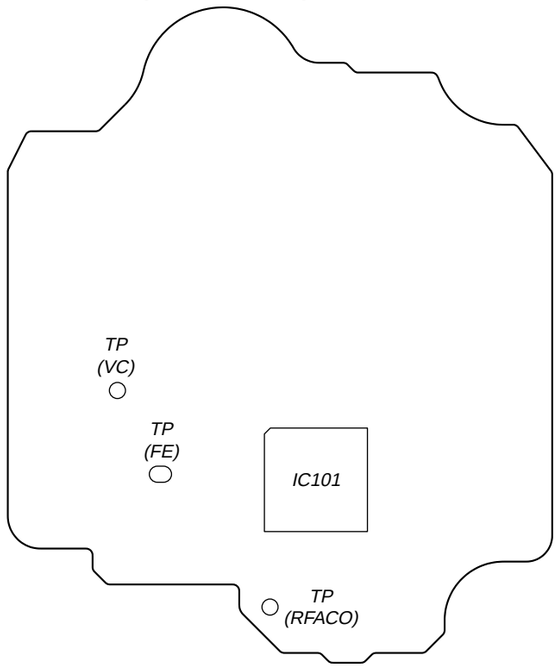

SECTION 6
DIAGRAMS

6-1. BLOCK DIAGRAM – SERVO Section –

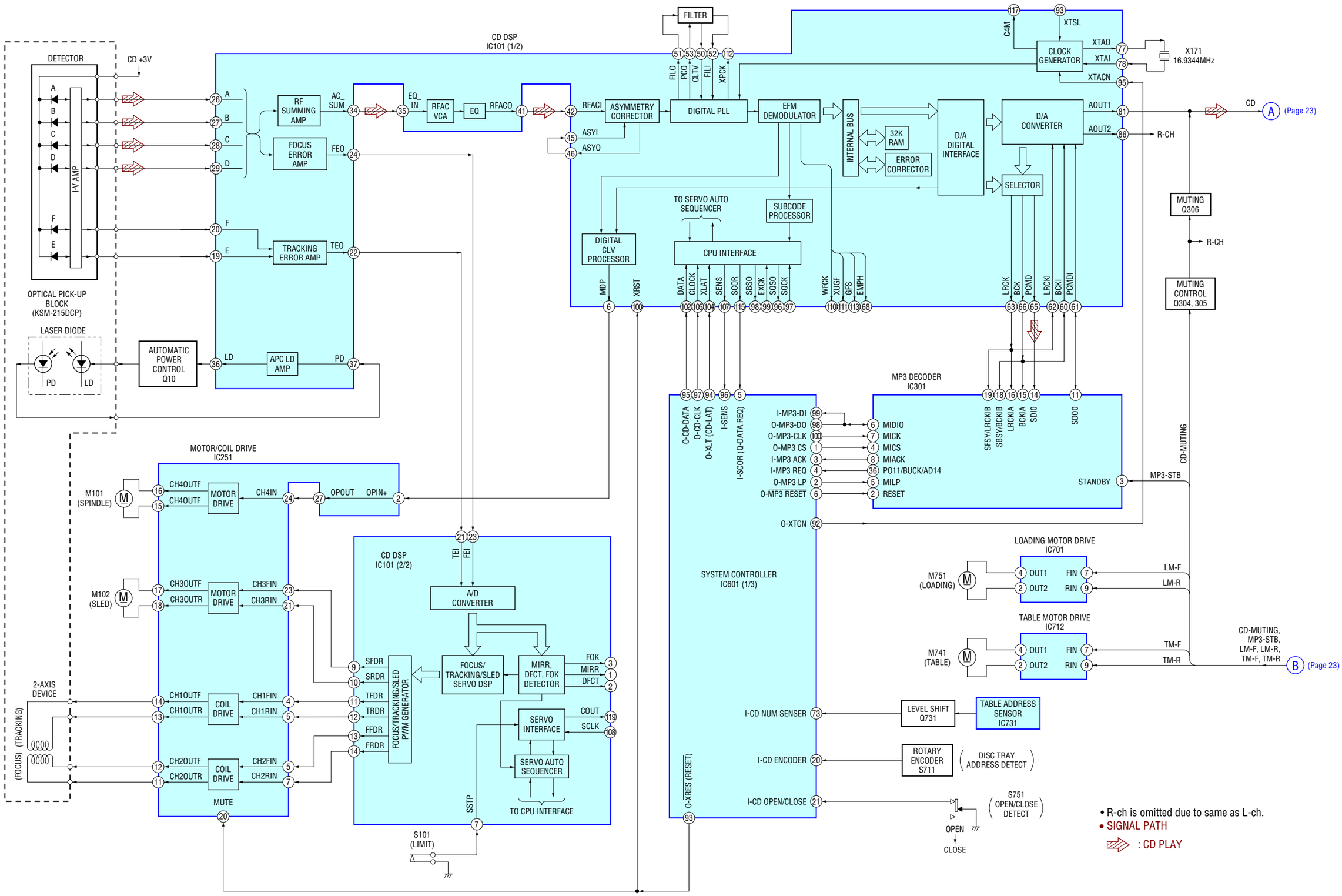

6-2. BLOCK DIAGRAM – MAIN Section –

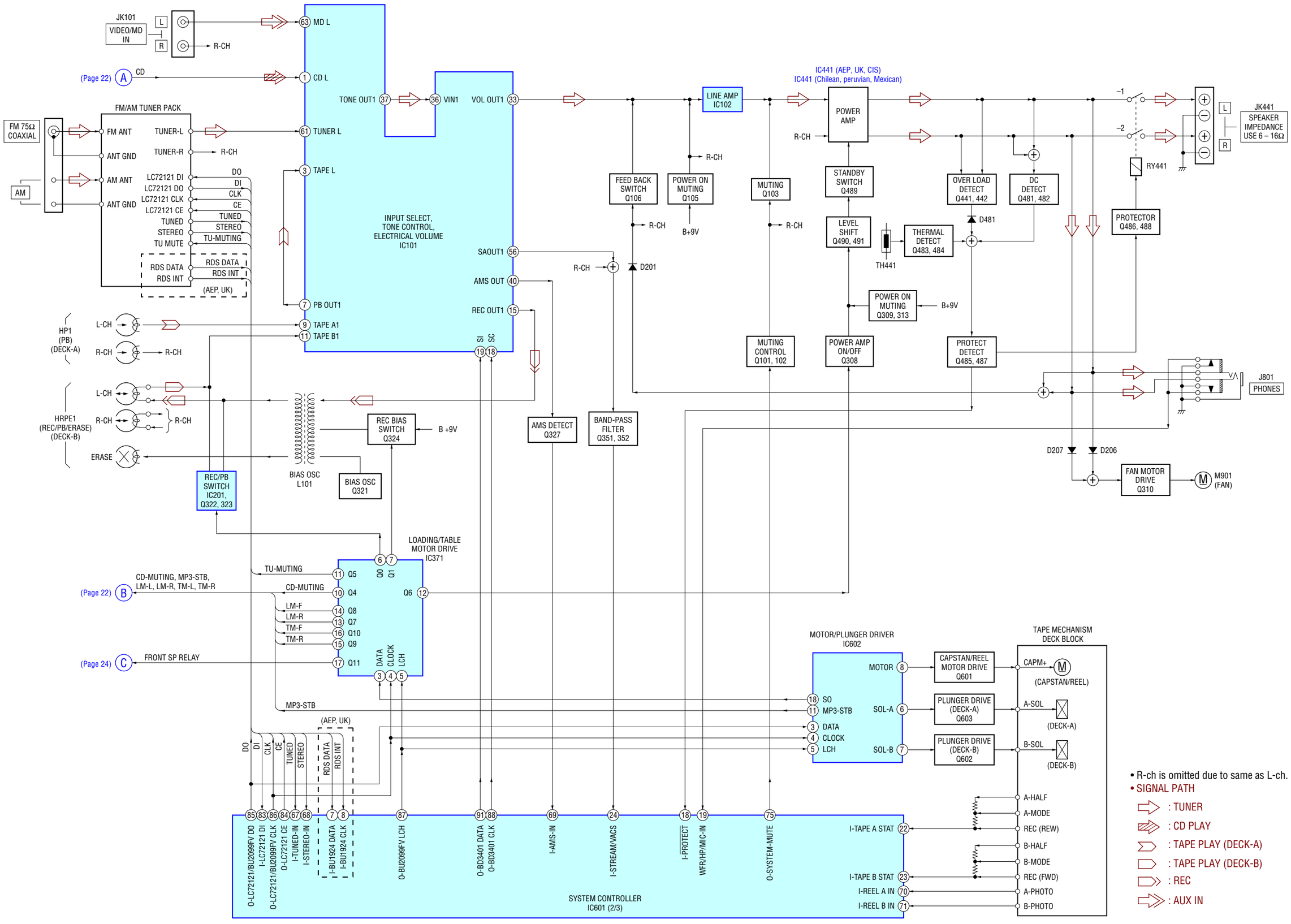

- R-ch is omitted due to same as L-ch.
- SIGNAL PATH
  - : TUNER
  - : CD PLAY
  - : TAPE PLAY (DECK-A)
  - : TAPE PLAY (DECK-B)
  - : REC
  - : AUX IN

6-3. BLOCK DIAGRAM – PANEL/POWER SUPPLY Section –

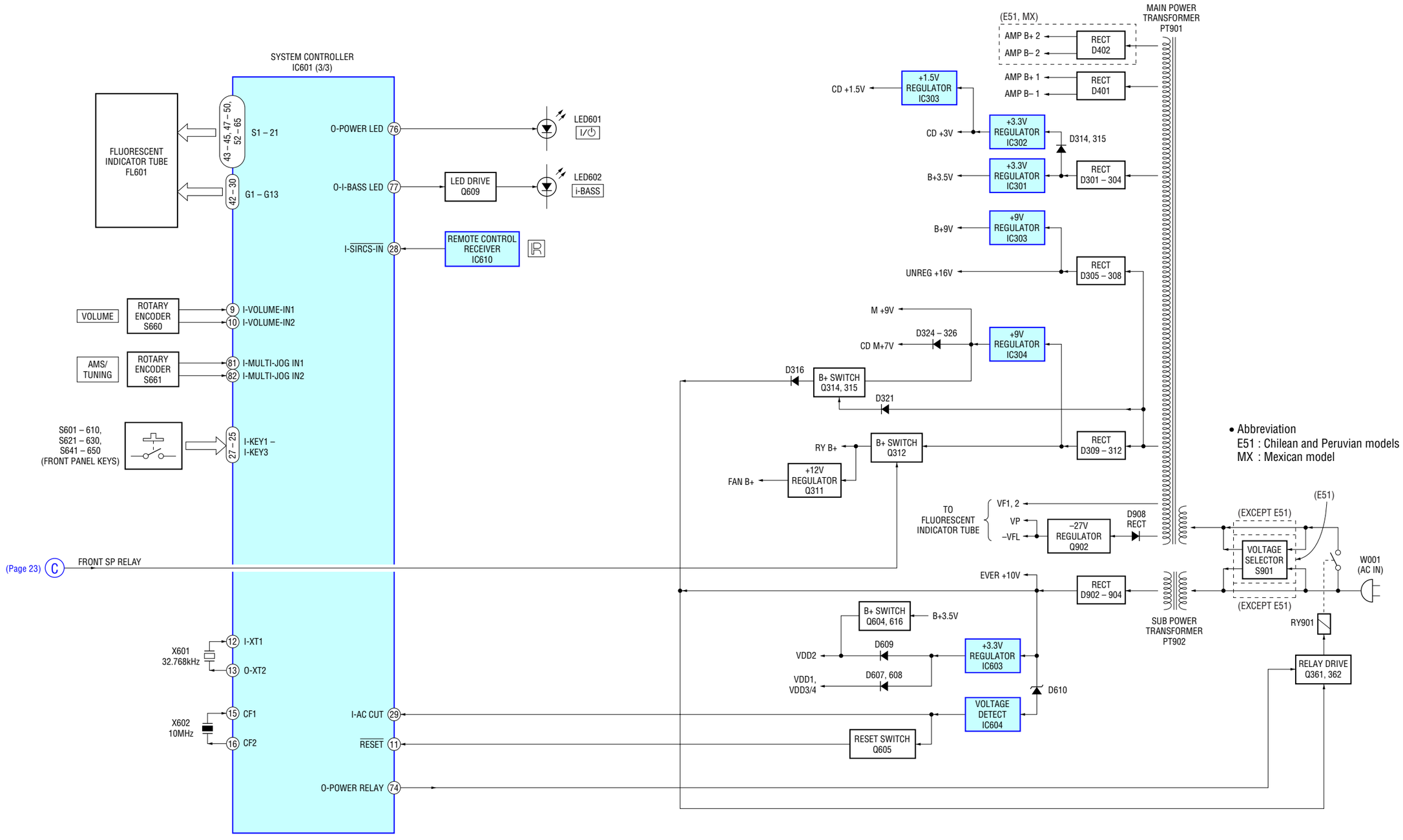

6-4. NOTE FOR PRINTED WIRING BOARDS AND SCHEMATIC DIAGRAMS

Note on Printed Wiring Board:

- ○——— : parts extracted from the component side.
- ——— : parts extracted from the conductor side.
- ▬ : Pattern from the side which enables seeing.

(The other layers' patterns are not indicated.)

Caution:	
Pattern face side: (Conductor Side)	Parts on the pattern face side seen from the pattern face are indicated.
Parts face side: (Component Side)	Parts on the parts face side seen from the parts face are indicated.

- Indication of transistor.

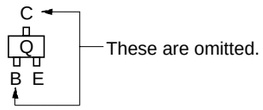

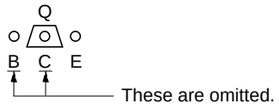

Note on Schematic Diagram:

- All capacitors are in µF unless otherwise noted. pF: µµF 50 WV or less are not indicated except for electrolytics and tantalums.
- All resistors are in Ω and 1/4 W or less unless otherwise specified.
- △ : internal component.
- : nonflammable resistor.
- : fusible resistor.
- : panel designation.

Note: The components identified by mark ⚠ or dotted line with mark ⚠ are critical for safety.
Replace only with part number specified.

- ▬▬ : B+ Line.
- ▬ ▬ ▬ : B– Line.
- Voltages and waveforms are dc with respect to ground under no-signal conditions.
  – BD Section –
  no mark : CD PLAY
  – Other Sections –
  no mark : FM
  ( ) : TAPE PLAY
  《 》 : TAPE REC
  [ ] : CD PLAY
  ∗ : Impossible to measure
- Voltages are taken with a VOM (Input impedance 10 MΩ). Voltage variations may be noted due to normal production tolerances.
- Waveforms are taken with a oscilloscope. Voltage variations may be noted due to normal production tolerances.
- Circled numbers refer to waveforms.
- Signal path.
  : TUNER (FM/AM)
  : TAPE PLAY (DECK A)
  : TAPE PLAY (DECK B)
  : REC
  : CD PLAY
  : AUX IN
- Abbreviation
  E51 : Chilean and Peruvian models
  MX : Mexican model

- **Circuit Boards Location**

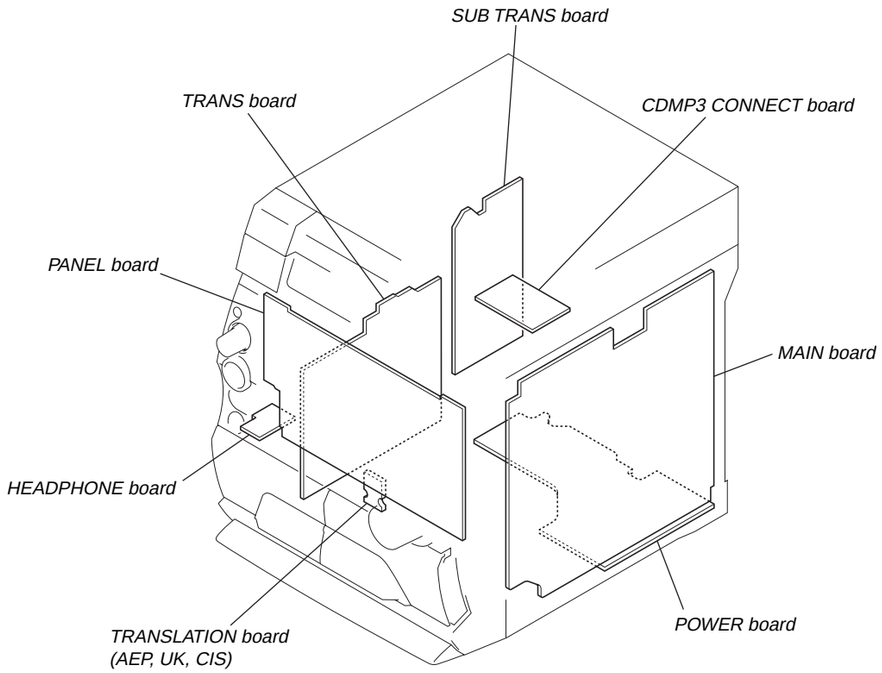

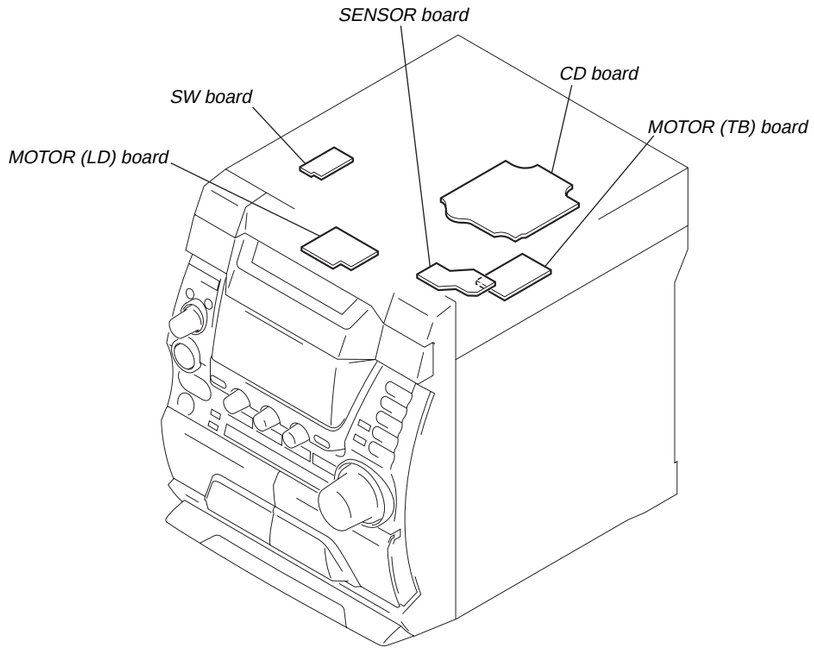

6-5. PRINTED WIRING BOARD – CD Board –

• See page 25 for Circuit Boards Location. :Uses unleaded solder.

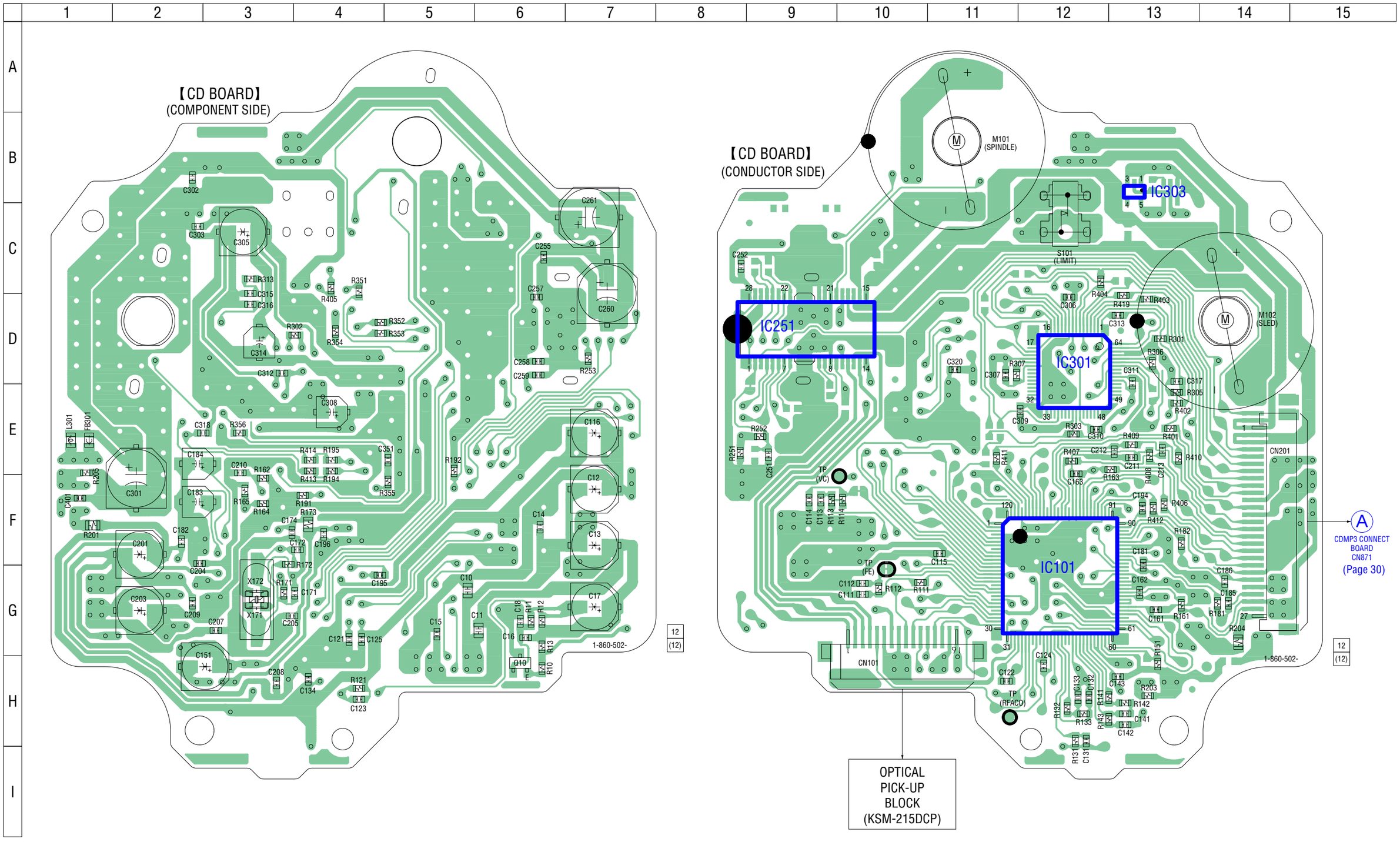

6-6. SCHEMATIC DIAGRAM – CD Board –

• See page 48 for IC Block Diagrams. • See page 48 for Waveforms.

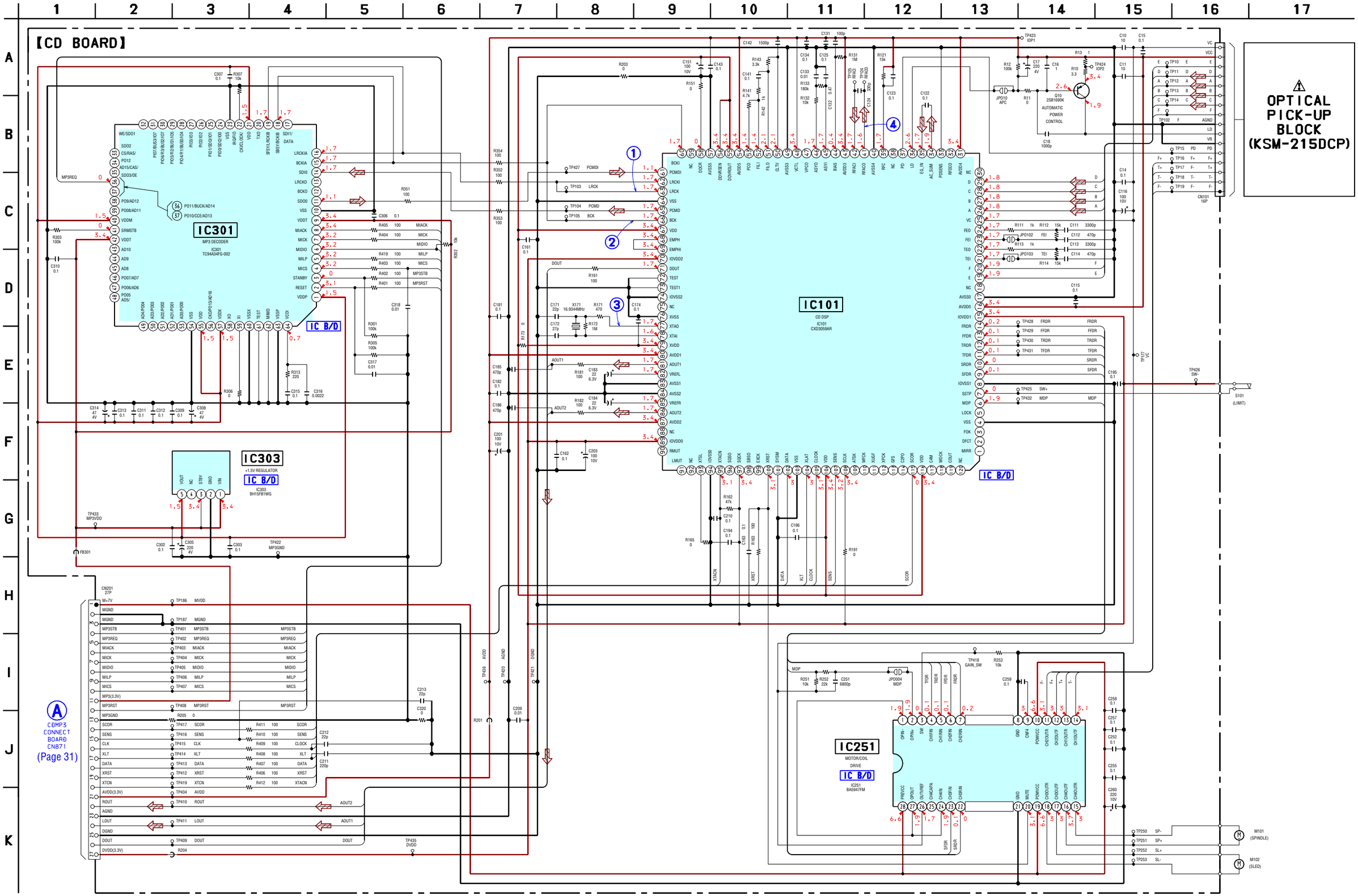

The components identified by mark ⚠ or dotted line with mark ⚠ are critical for safety.
Replace only with part number specified.

6-7. PRINTED WIRING BOARDS – CHANGER Section –

• See page 25 for Circuit Boards Location. :Uses unleaded solder.

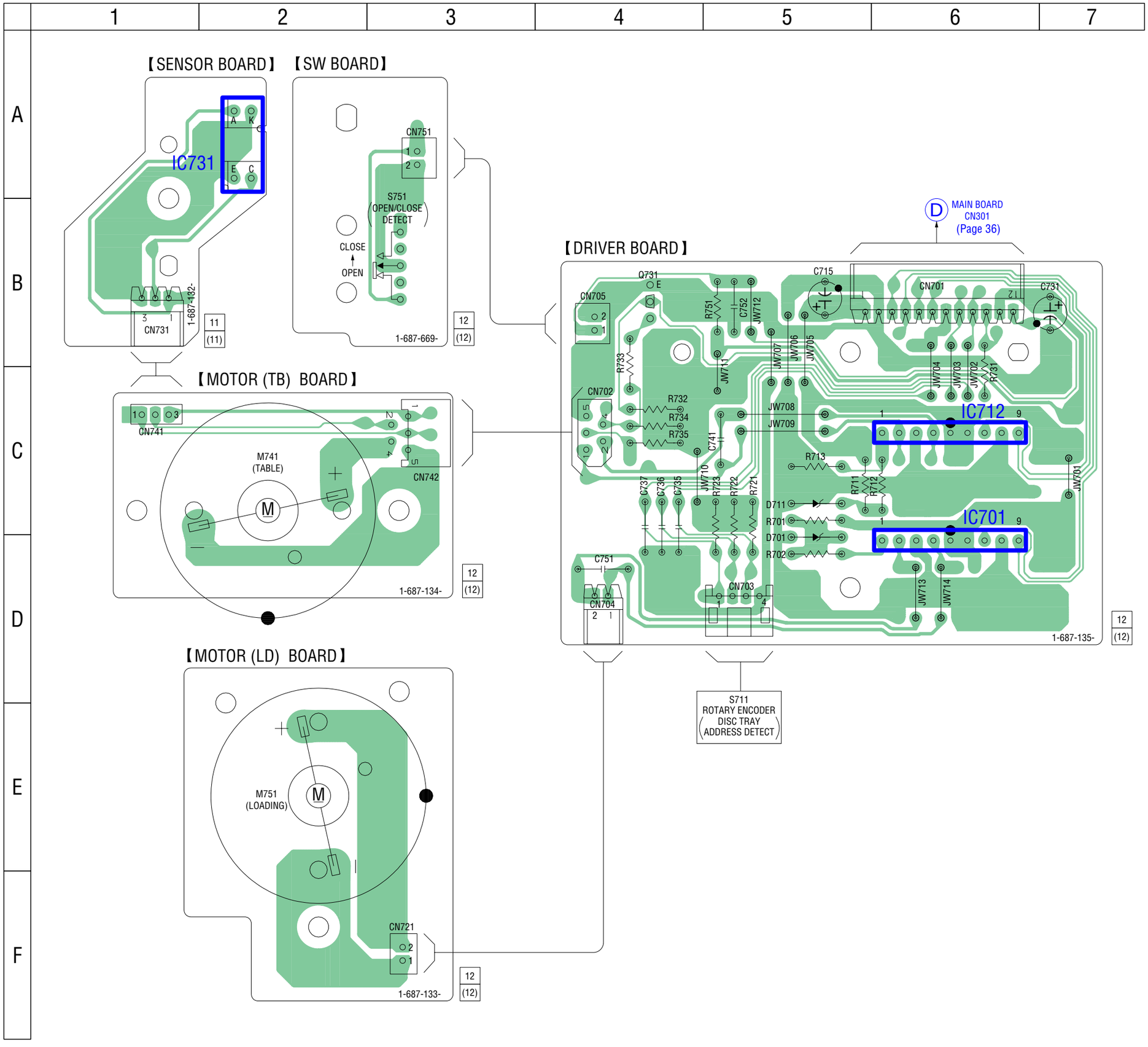

6-8. SCHEMATIC DIAGRAM – CHANGER Section – • See page 48 for IC Block Diagram.

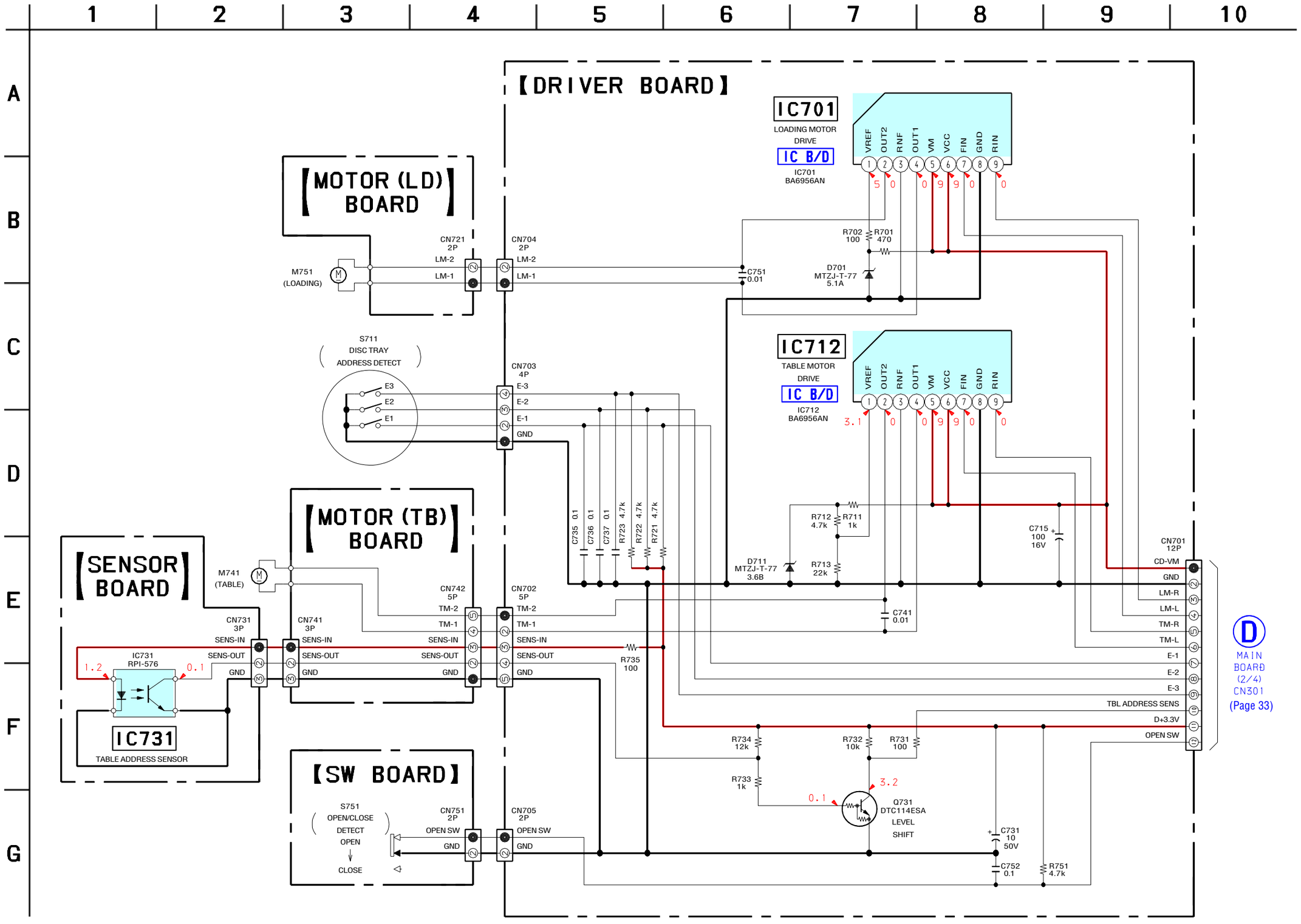

6-9. PRINTED WIRING BOARDS – CDMP3 CONNECT/TRANSLATION Boards –

• See page 25 for Circuit Boards Location.

:Uses unleaded solder.

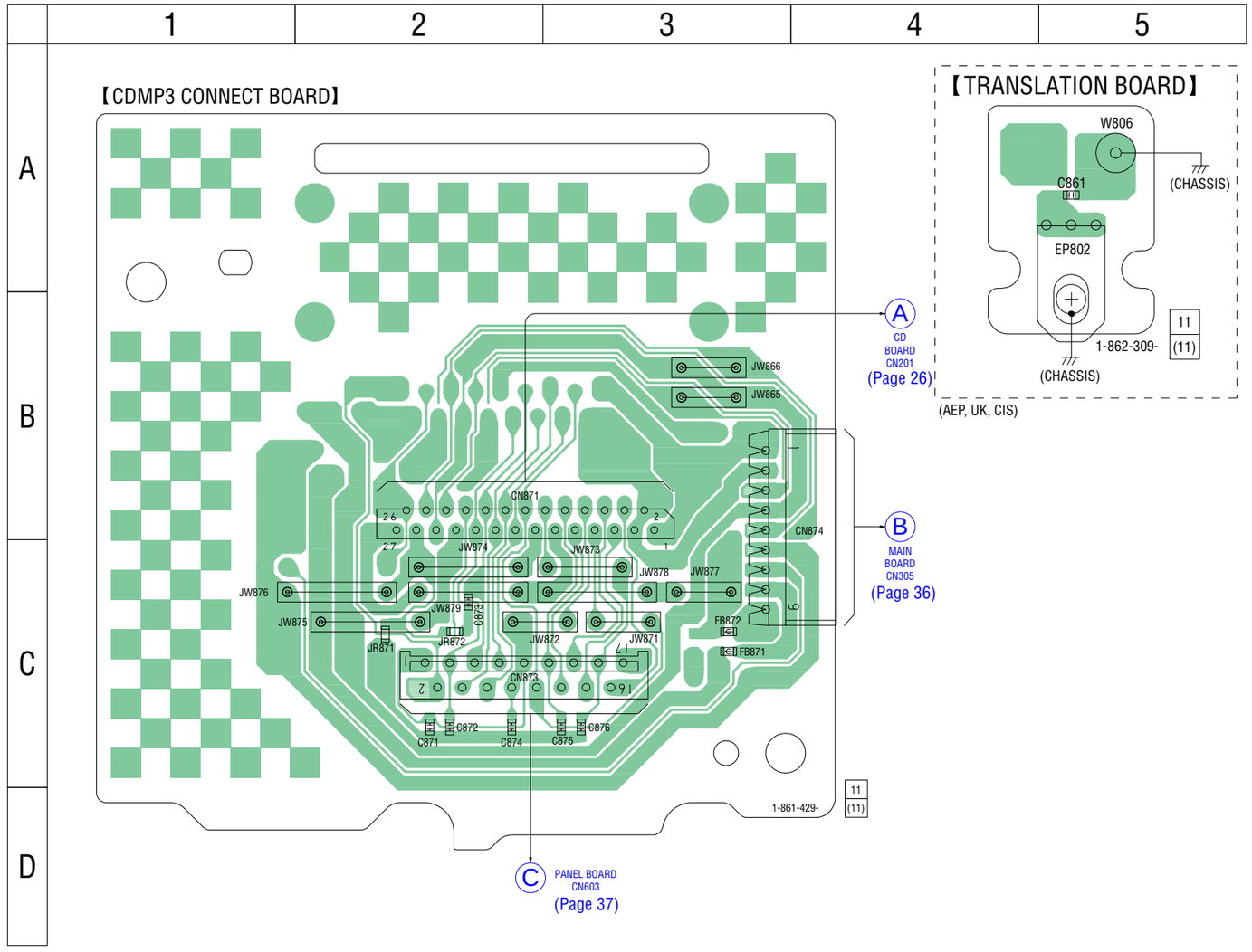

6-10. SCHEMATIC DIAGRAM – CDMP3 CONNECT/TRANSLATION Boards –

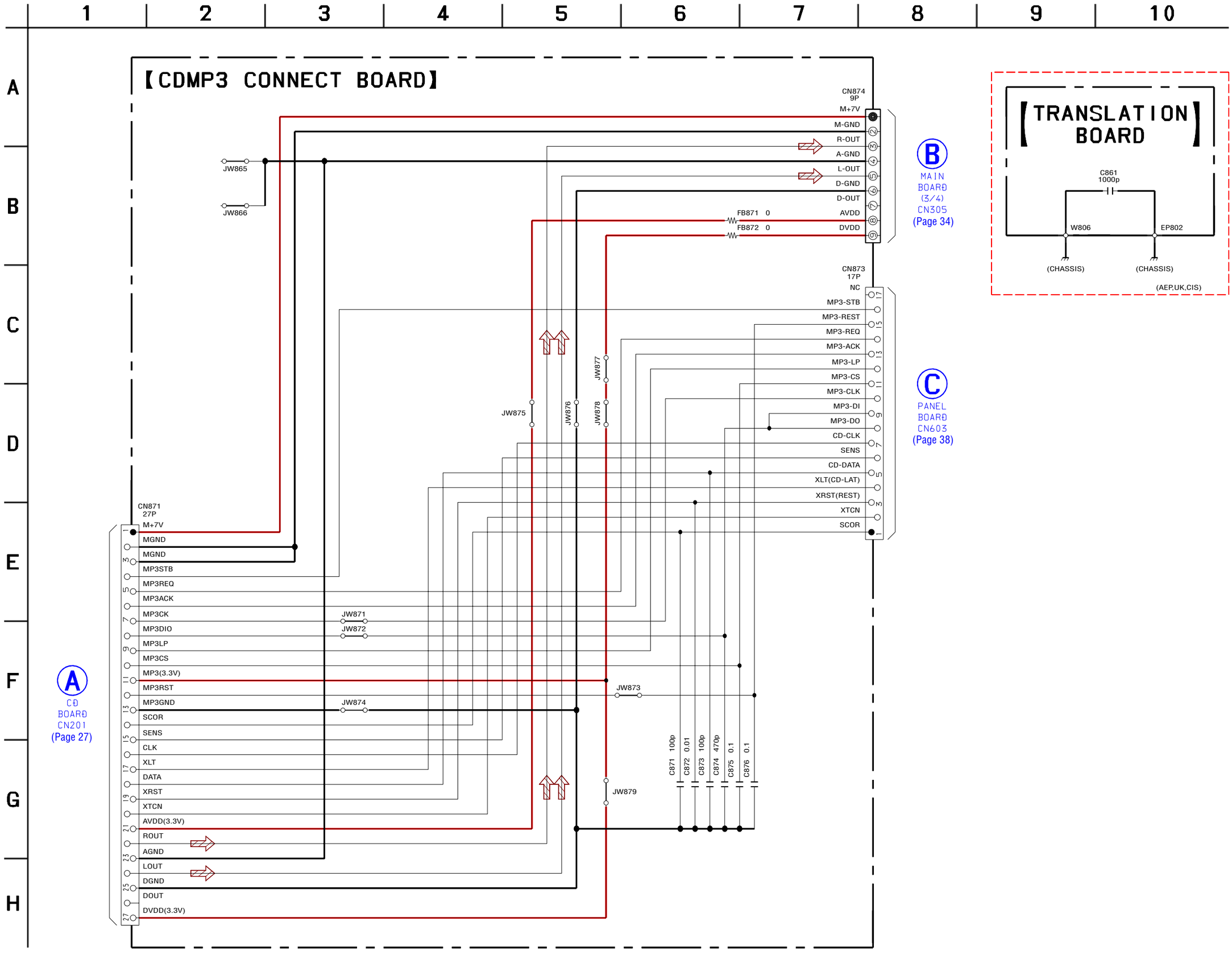

6-11. SCHEMATIC DIAGRAM – MAIN Section (1/4) – • See page 48 for IC Block Diagram.

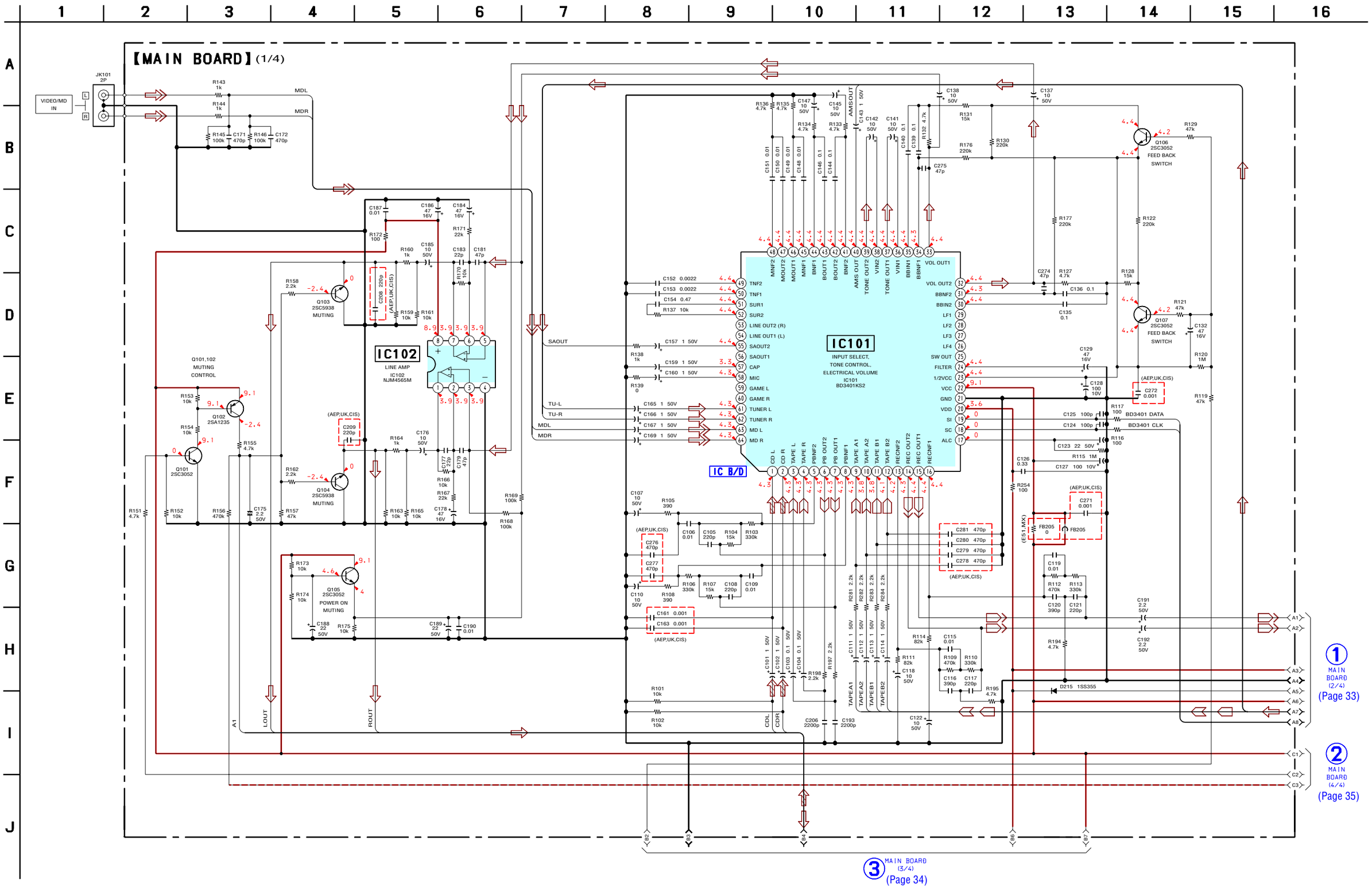

6-12. SCHEMATIC DIAGRAM – MAIN Section (2/4) –

• See page 48 for IC Block Diagram. • See page 48 for Waveform.

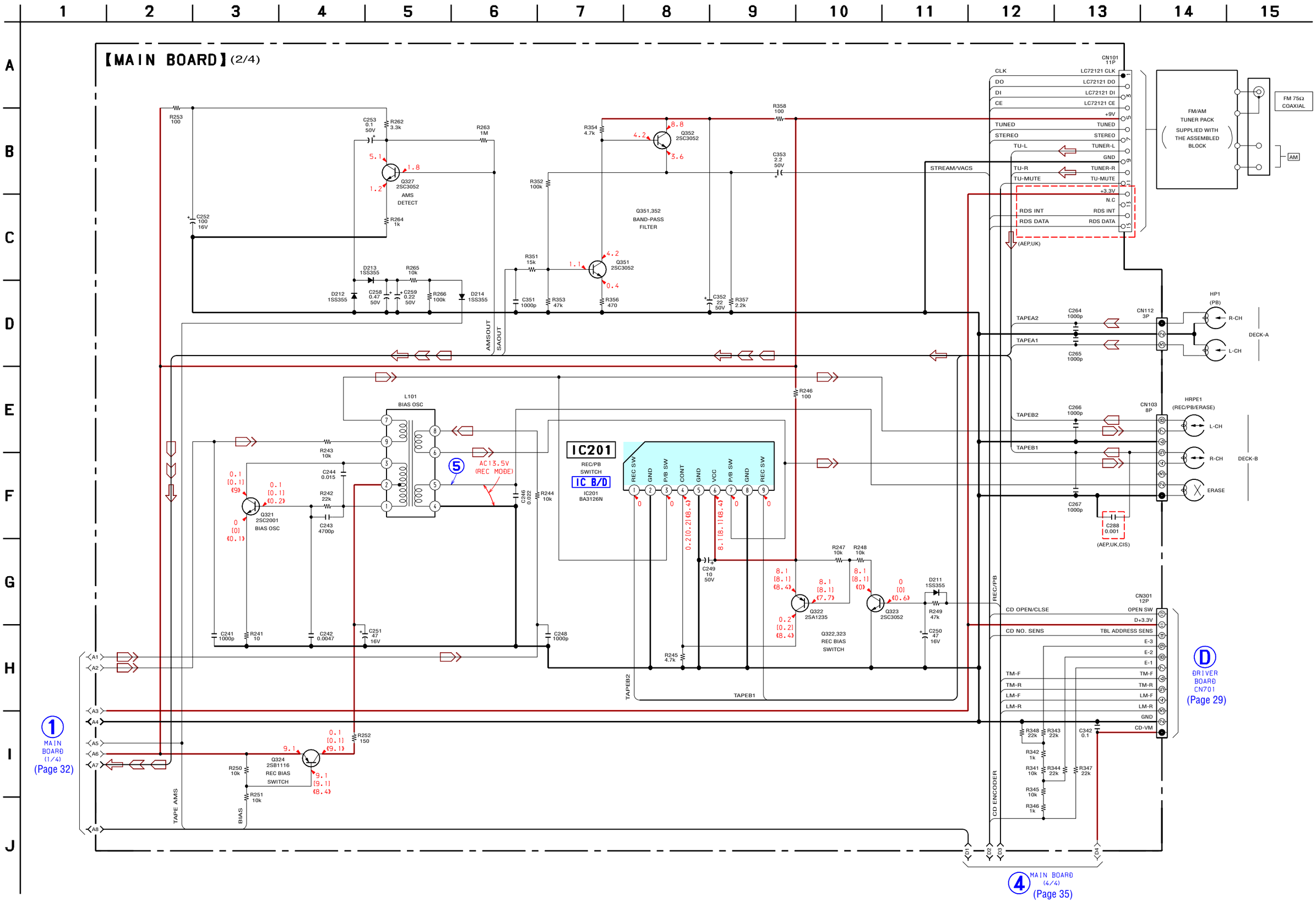

6-13. SCHEMATIC DIAGRAM – MAIN Section (3/4) –

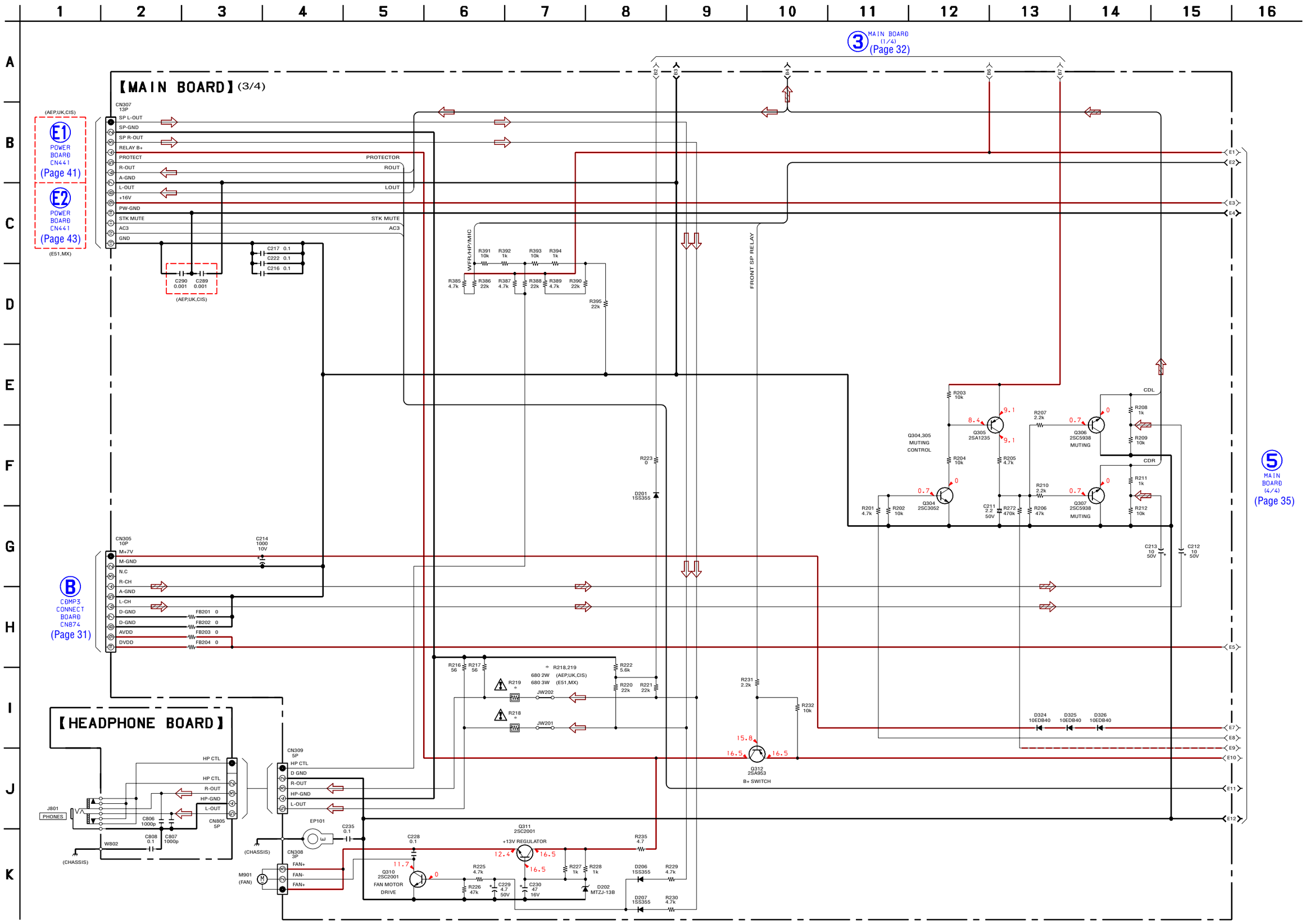

The components identified by mark ⚠ or dotted line with mark ⚠ are critical for safety.
Replace only with part number specified.

6-14. SCHEMATIC DIAGRAM – MAIN Section (4/4) –

• See page 54 for IC Pin Function Description.

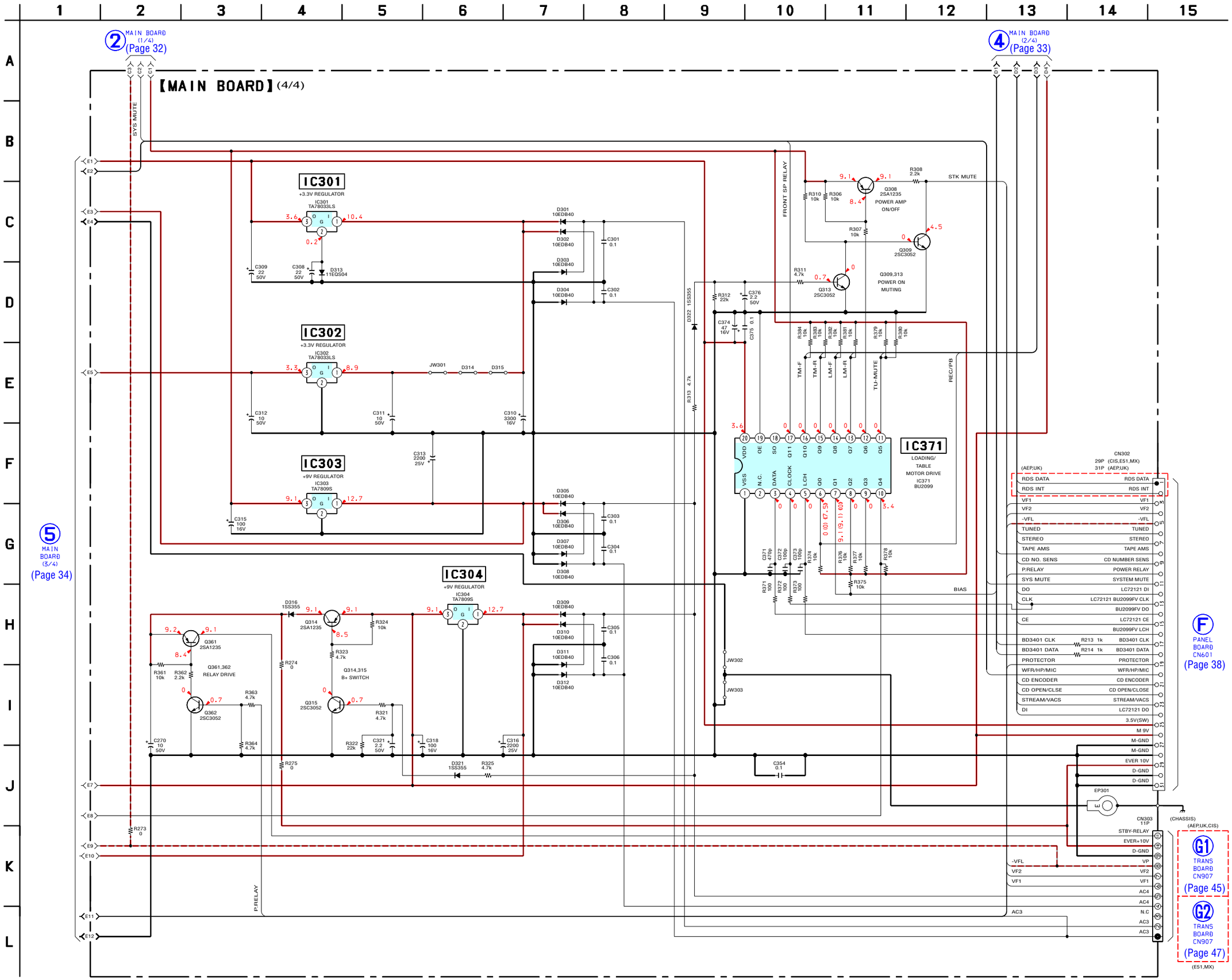

6-15. PRINTED WIRING BOARDS – MAIN Section –

• See page 25 for Circuit Boards Location. :Uses unleaded solder.

- **Semiconductor Location**

Ref. No.	Location
D201	H-9
D202	H-10
D206	I-10
D207	H-10
D211	F-3
D212	G-5
D213	G-4
D214	G-4
D215	G-4
D301	H-7
D302	H-7
D303	H-7
D304	H-7
D305	H-6
D306	H-7
D307	H-6
D308	H-7
D309	H-6
D310	H-6
D311	H-6
D312	H-6
D313	F-7
D316	G-5
D321	H-5
D322	H-4
D324	E-3
D325	E-3
D326	E-3
IC101	D-5
IC102	D-8
IC201	E-4
IC301	F-7
IC302	E-8
IC303	F-7
IC304	F-6
IC371	B-4
Q101	G-8
Q102	G-8
Q103	G-9
Q104	G-9
Q105	E-10
Q106	D-7
Q107	D-7
Q304	D-4
Q305	D-4
Q306	D-4
Q307	D-4
Q308	A-3
Q309	B-3
Q310	G-10
Q311	H-10
Q312	H-10
Q313	B-2
Q314	G-5
Q315	G-5
Q321	E-6
Q322	E-4
Q323	E-4
Q324	F-4
Q327	F-4
Q351	G-4
Q352	G-3
Q361	G-6
Q362	G-5

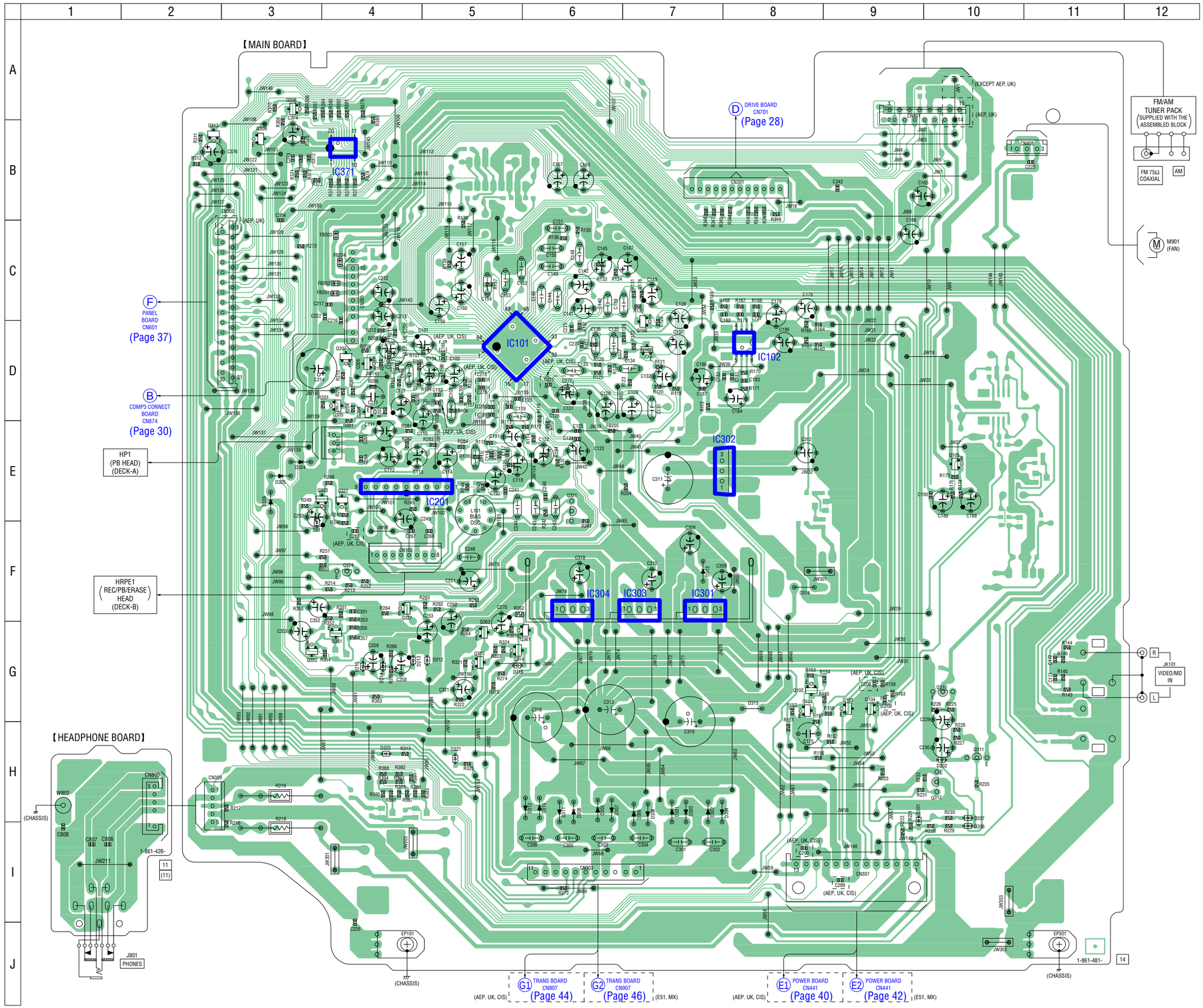

6-16. PRINTED WIRING BOARD – PANEL Section –

• See page 25 for Circuit Boards Location. :Uses unleaded solder.

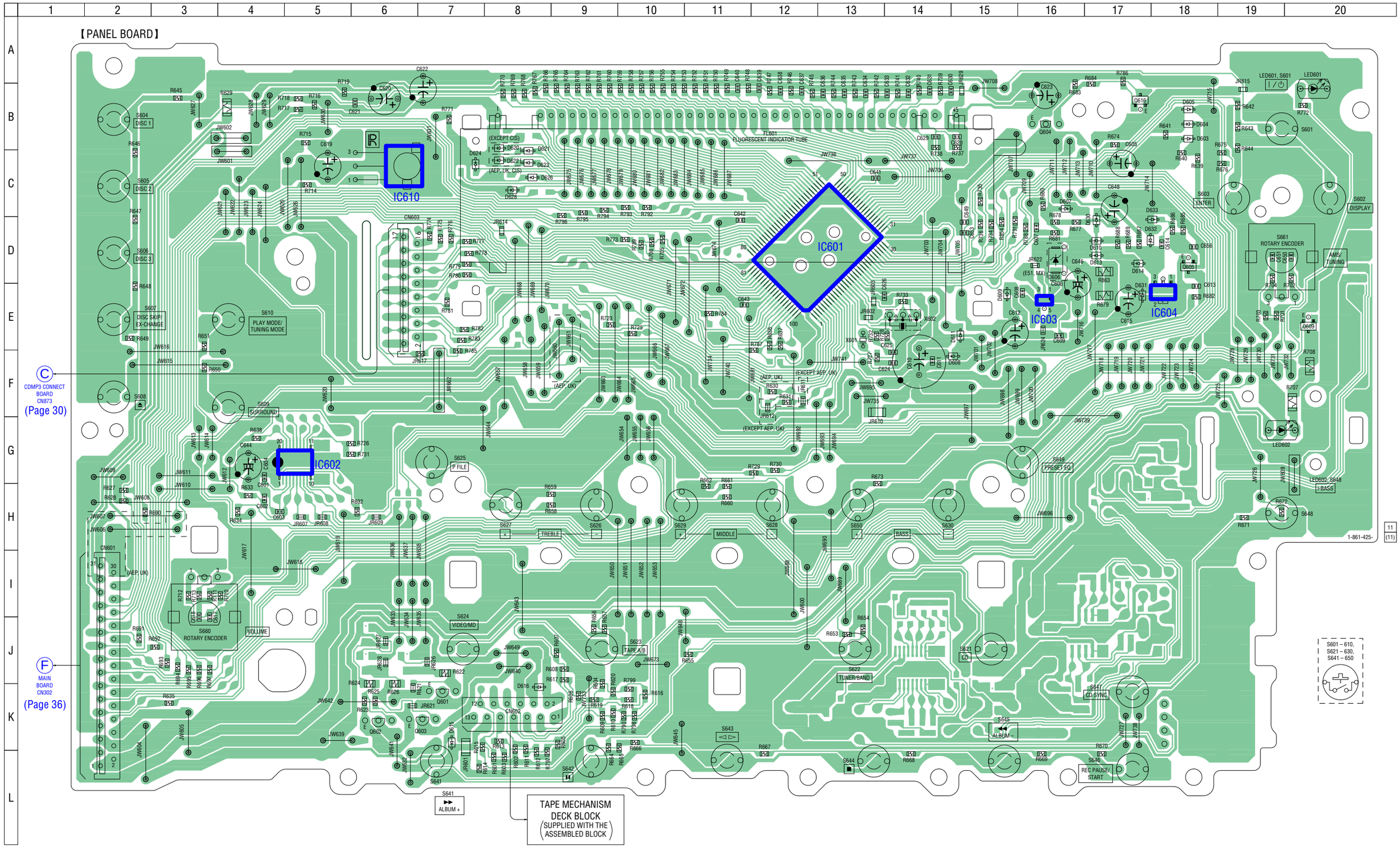

• **Semiconductor Location**

Ref. No.	Location	Ref. No.	Location	Ref. No.	Location	Ref. No.	Location	Ref. No.	Location
D603	B-18	D613	D-17	D626	C-8	IC603	E-16	Q603	K-7
D604	B-18	D614	D-17	D628	C-8	IC604	E-18	Q604	B-16
D605	B-18	D615	K-7	D630	D-17	IC610	C-6	Q605	D-18
D606	D-16	D616	K-8	D631	E-17			Q609	E-20
D607	C-16	D620	B-8	D632	D-17	LED601	B-20	Q616	B-17
D608	F-15	D621	C-8	D633	D-18	LED602	G-19		
D609	E-15	D622	C-8						
D610	D-17	D623	C-8	IC601	D-13	Q601	K-7		
D611	E-15	D624	C-7	IC602	G-5	Q602	K-6		

6-17. SCHEMATIC DIAGRAM – PANEL Section (1/2) –

• See page 48 for Waveforms. • See page 54 for IC Pin Function Description.

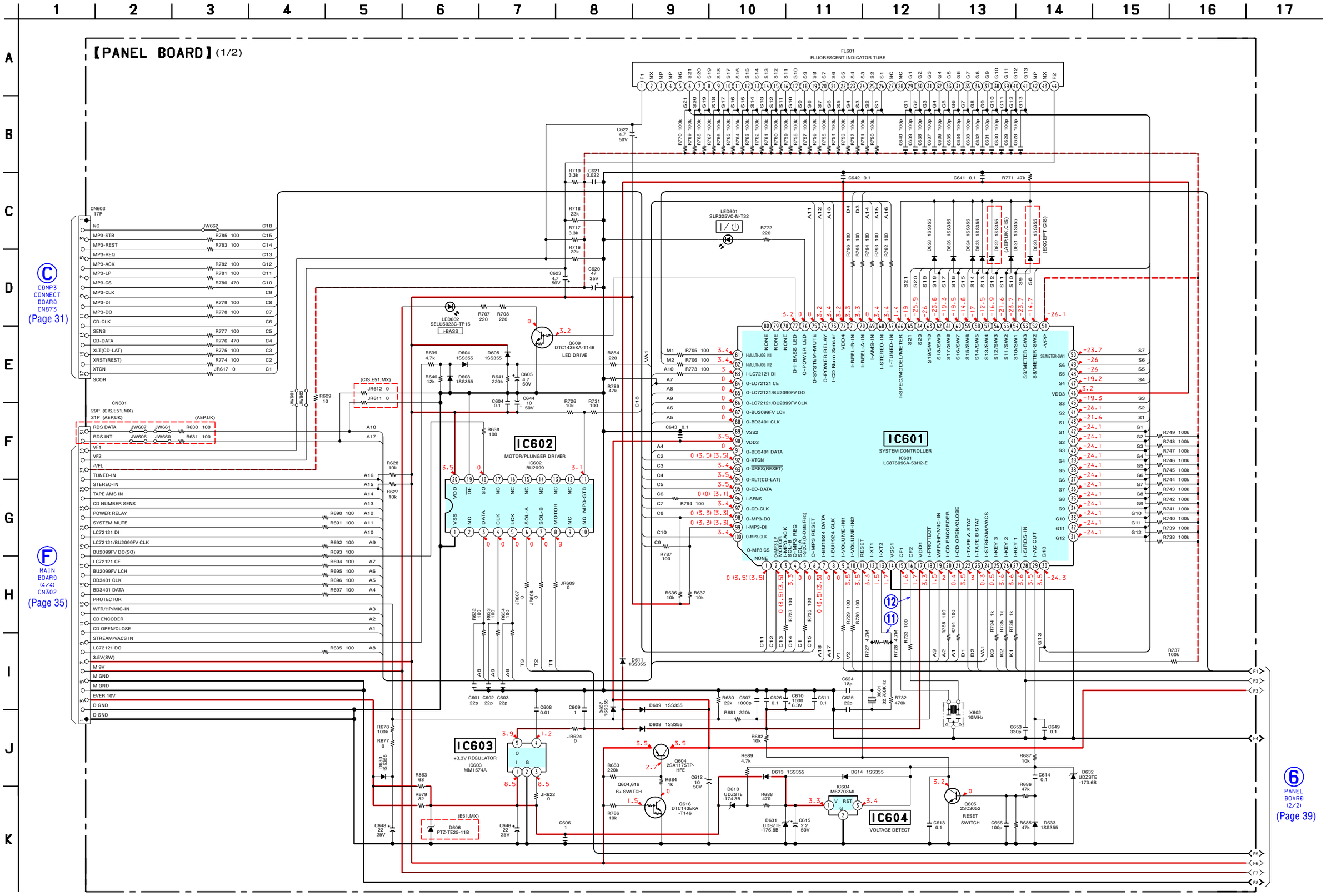

6-18. SCHEMATIC DIAGRAM – PANEL Section (2/2) –

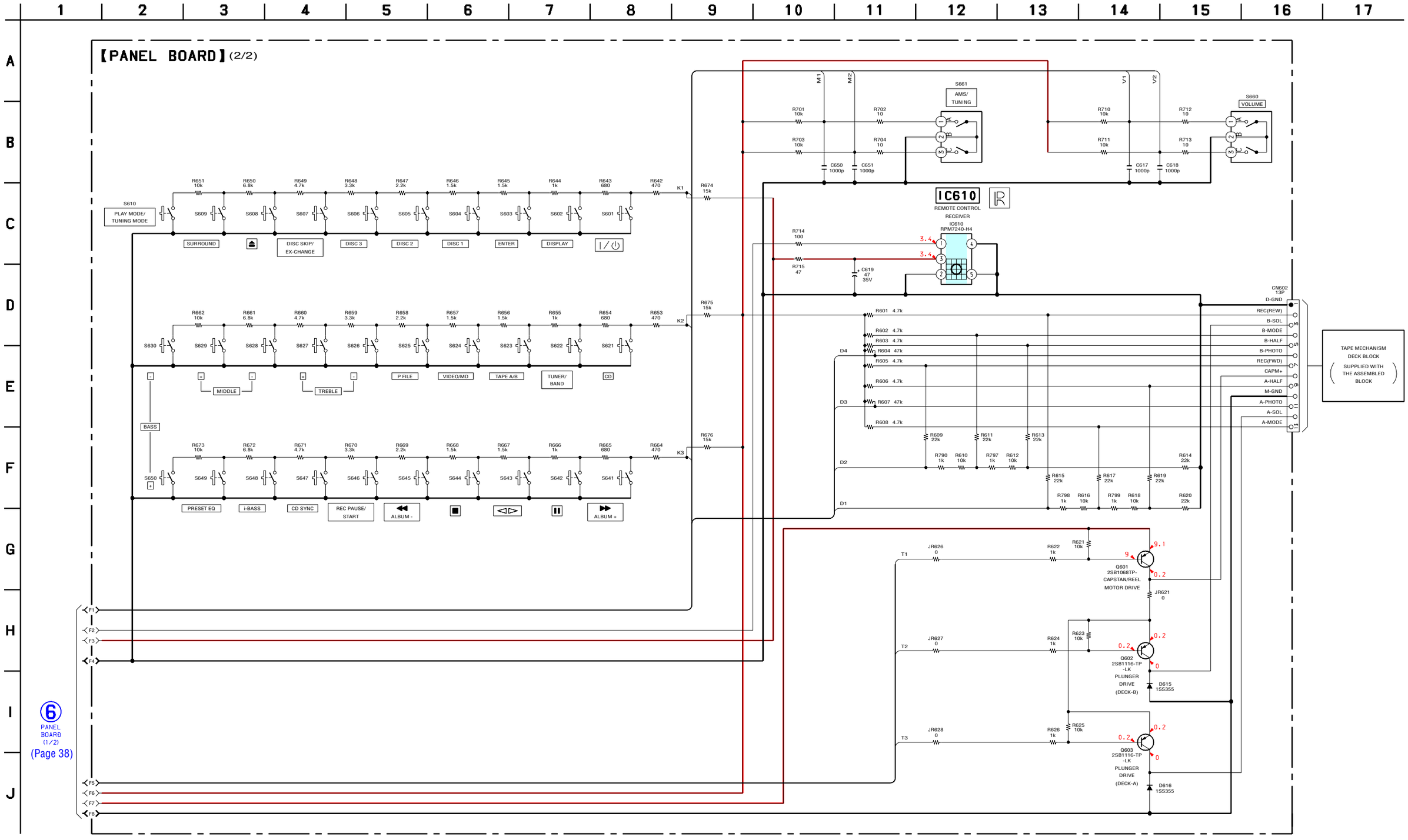

6-19. PRINTED WIRING BOARD – POWER AMP Section – (AEP, UK, CIS only)

• See page 25 for Circuit Boards Location. :Uses unleaded solder.

- **Semiconductor Location**

Ref. No.	Location
D401	E-3
D441	C-6
D442	C-6
D443	C-1
D481	C-5
D482	C-4
D483	C-8
IC441	B-6
Q441	C-6
Q442	C-6
Q481	C-8
Q482	C-8
Q483	C-8
Q484	C-8
Q485	B-4
Q486	B-4
Q487	B-4
Q488	C-5
Q489	C-8

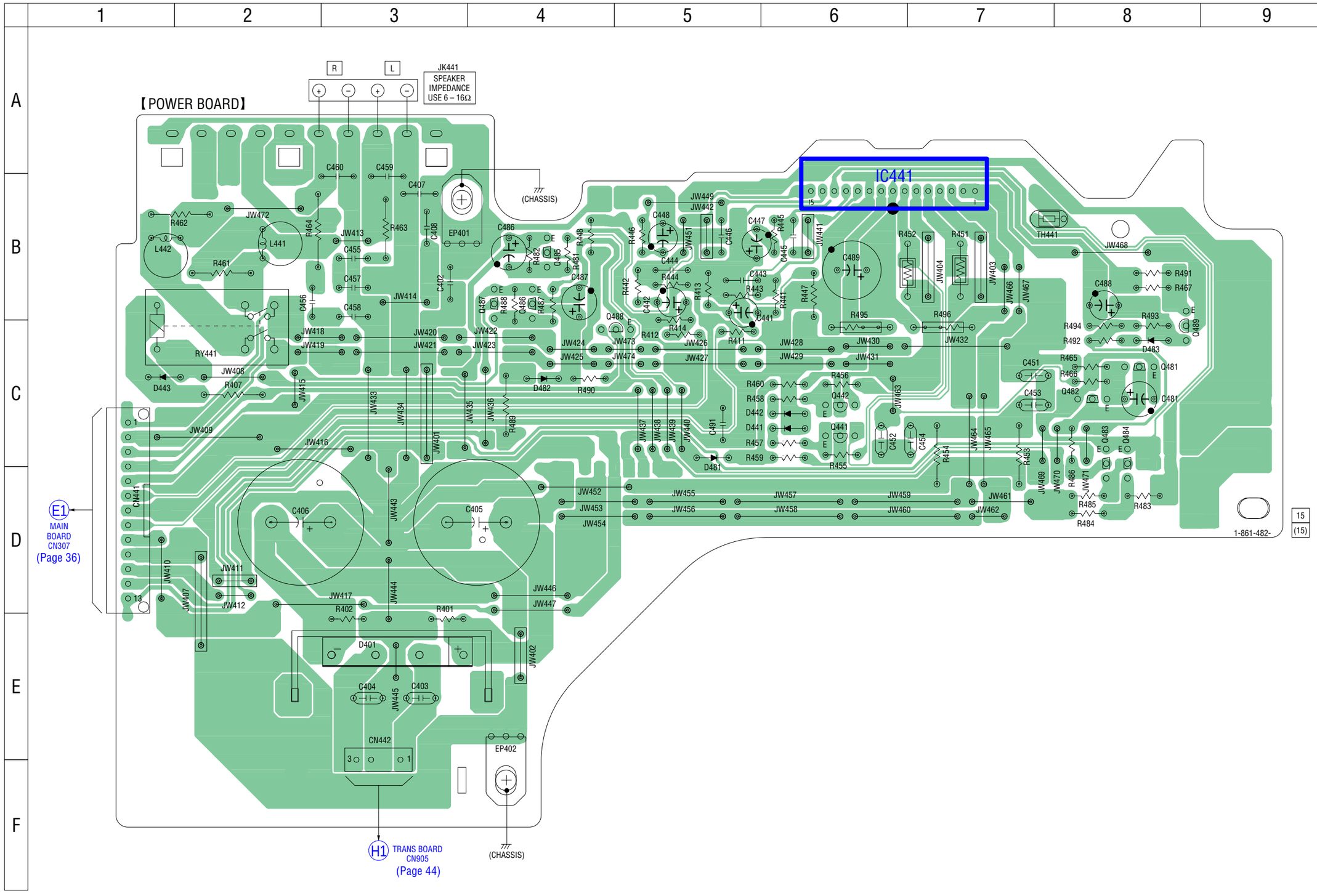

6-20. SCHEMATIC DIAGRAM – POWER AMP Section – (AEP, UK, CIS only)

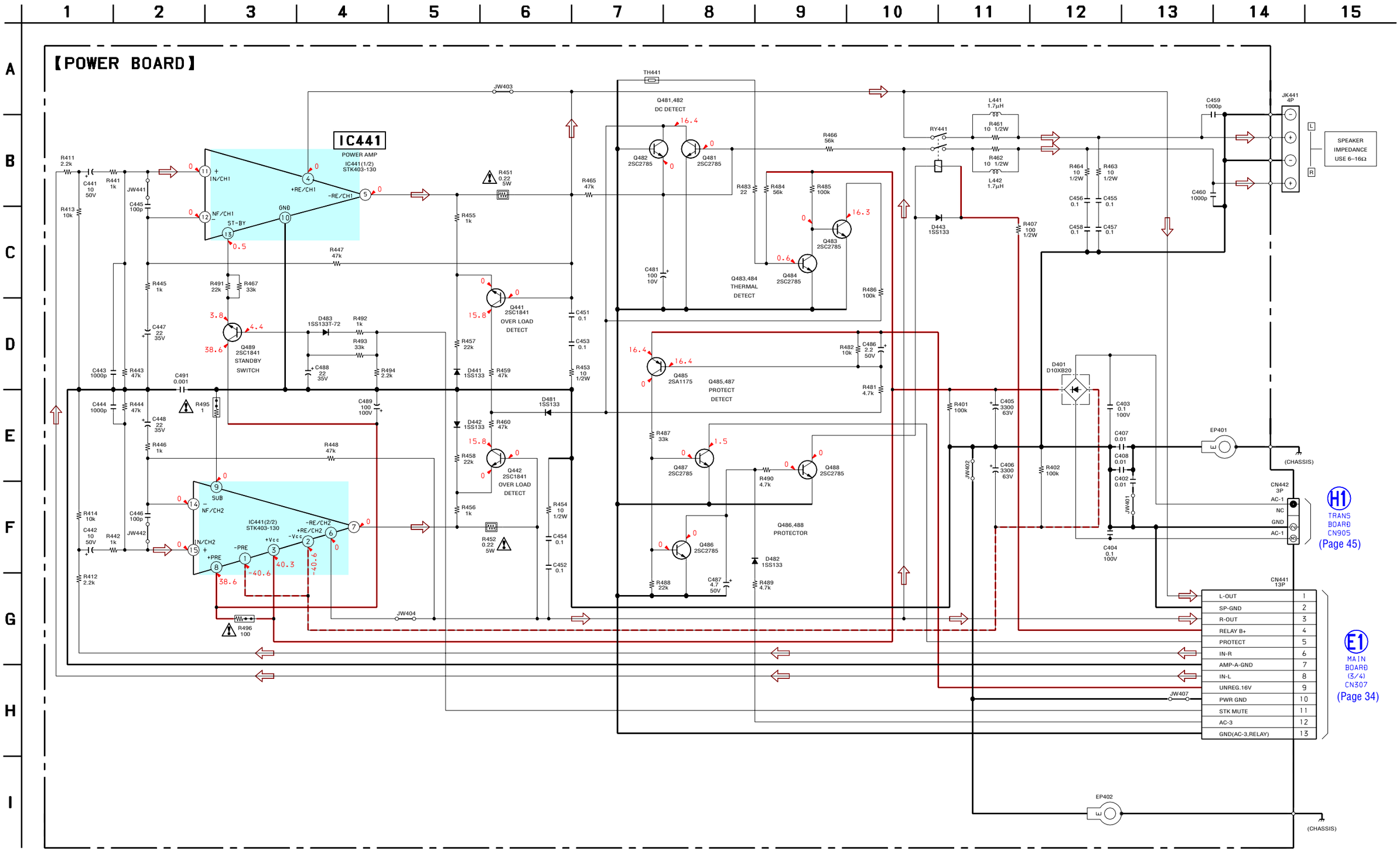

The components identified by mark ⚠ or dotted line with mark ⚠ are critical for safety.
Replace only with part number specified.

6-21. PRINTED WIRING BOARD – POWER AMP Section – (E51, MX only)

• See page 25 for Circuit Boards Location. :Uses unleaded solder.

- **Semiconductor Location**

Ref. No.	Location
D401	F-4
D402	G-3
D441	C-7
D442	C-6
D443	C-1
D444	D-8
D445	B-7
D446	B-7
D481	C-7
D482	C-4
IC441	A-6
Q441	C-6
Q442	C-6
Q481	C-7
Q482	C-7
Q483	B-9
Q484	C-9
Q485	B-4
Q486	B-4
Q487	B-3
Q488	C-4
Q489	C-8
Q490	C-7
Q491	D-7

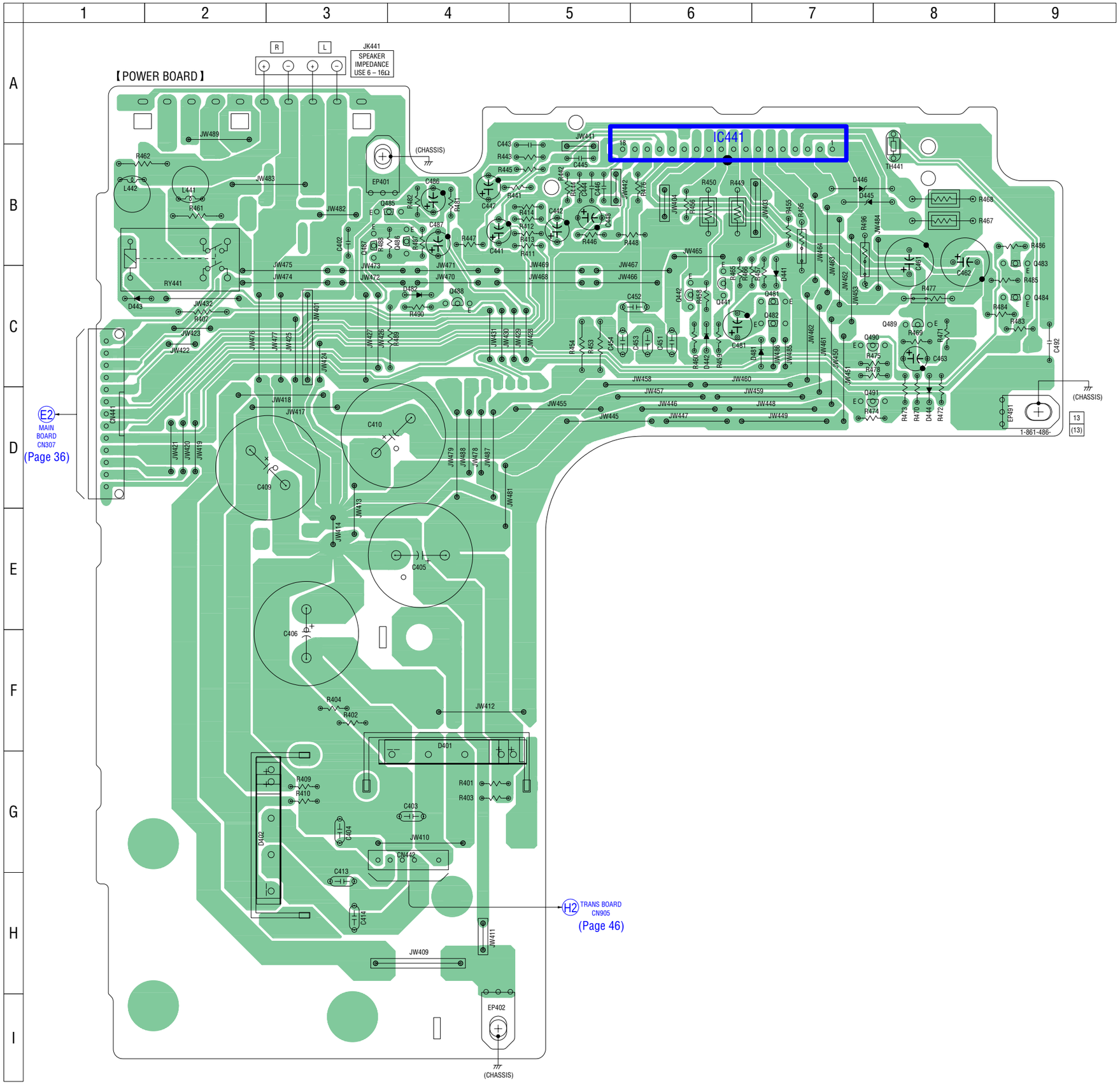

6-22. SCHEMATIC DIAGRAM – POWER AMP Section – (E51, MX only)

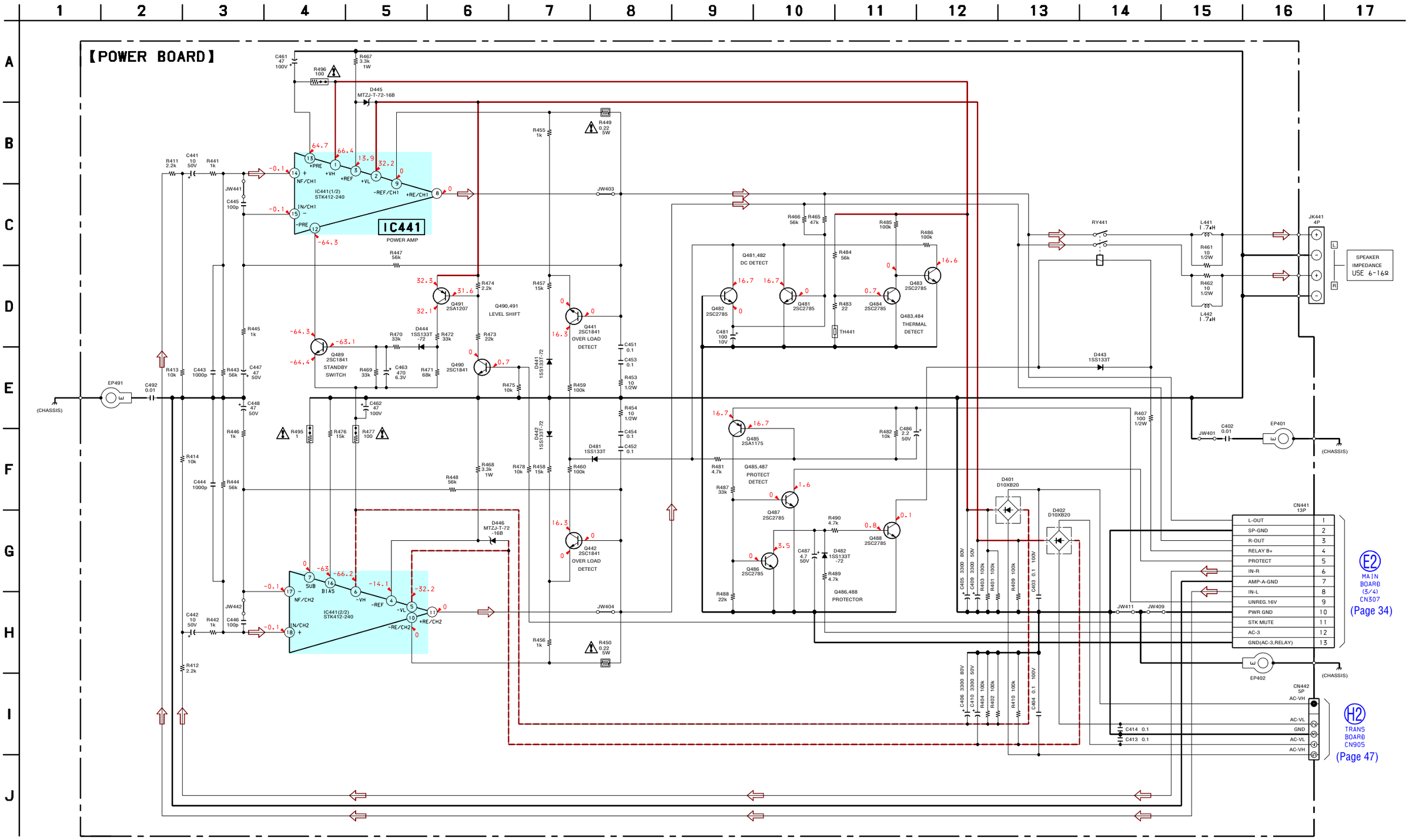

The components identified by mark ⚠ or dotted line with mark ⚠ are critical for safety.
Replace only with part number specified.

6-23. PRINTED WIRING BOARDS – TRANS Section – (AEP, UK, CIS only)

• See page 25 for Circuit Boards Location. :Uses unleaded solder.

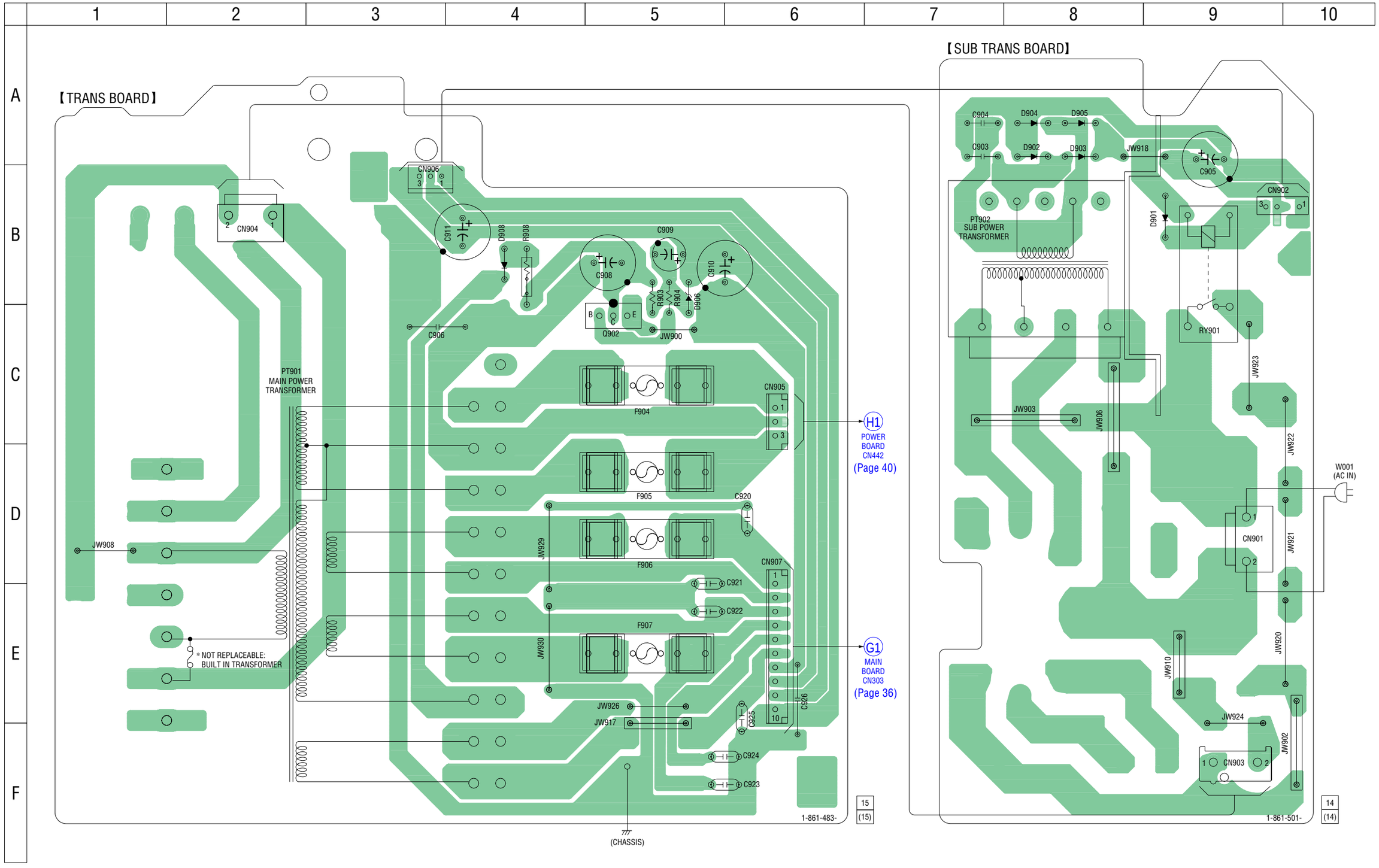

- **Semiconductor Location**

Ref. No.	Location
D901	B-9
D902	A-8
D903	A-8
D904	A-8
D905	A-8
D906	B-5
D908	B-4
Q902	C-5

6-24. SCHEMATIC DIAGRAM – TRANS Section – (AEP, UK, CIS only)

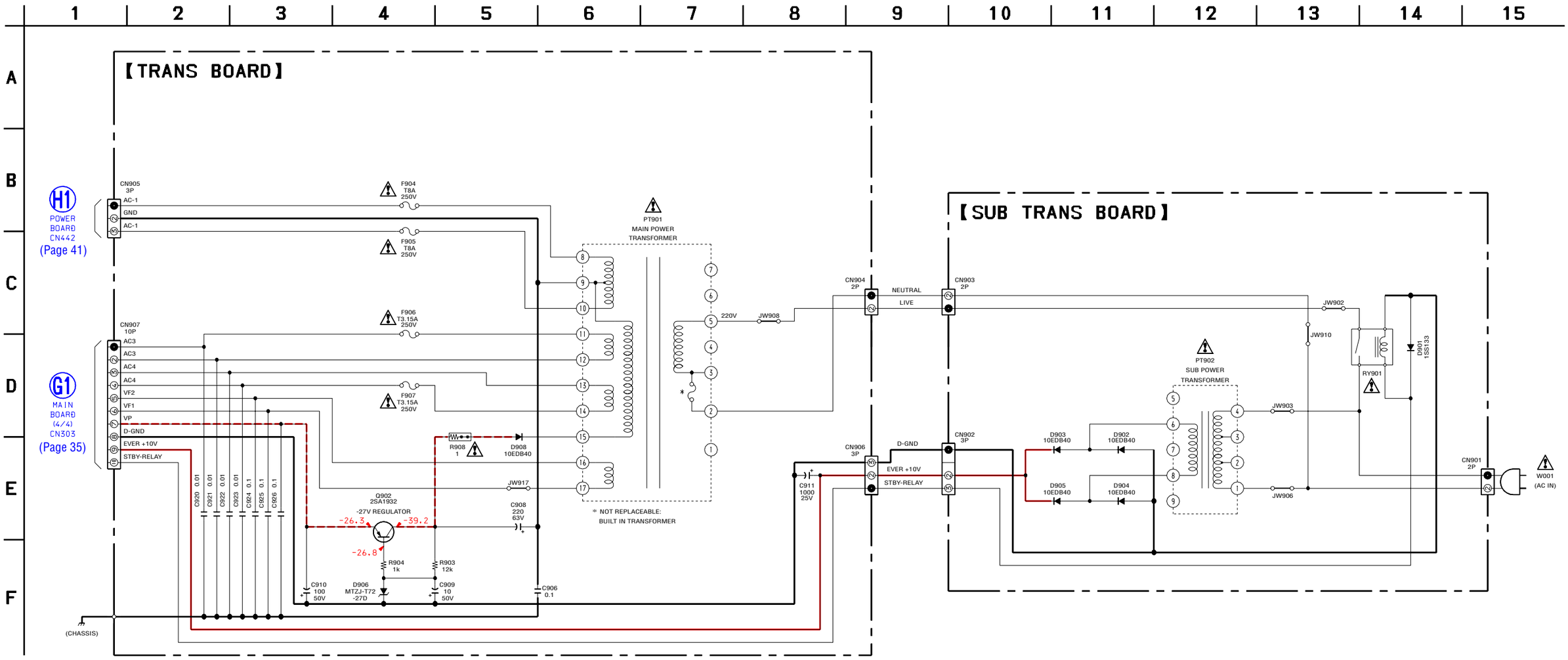

The components identified by mark ⚠ or dotted line with mark ⚠ are critical for safety.
Replace only with part number specified.

6-25. PRINTED WIRING BOARDS – TRANS Section – (E51, MX only)

• See page 25 for Circuit Boards Location. :Uses unleaded solder.

• **Semiconductor Location**

Ref. No.	Location
D901	B-9
D902	A-8
D903	A-8
D904	A-8
D905	A-8
D906	C-6
D908	B-4
Q902	B-5

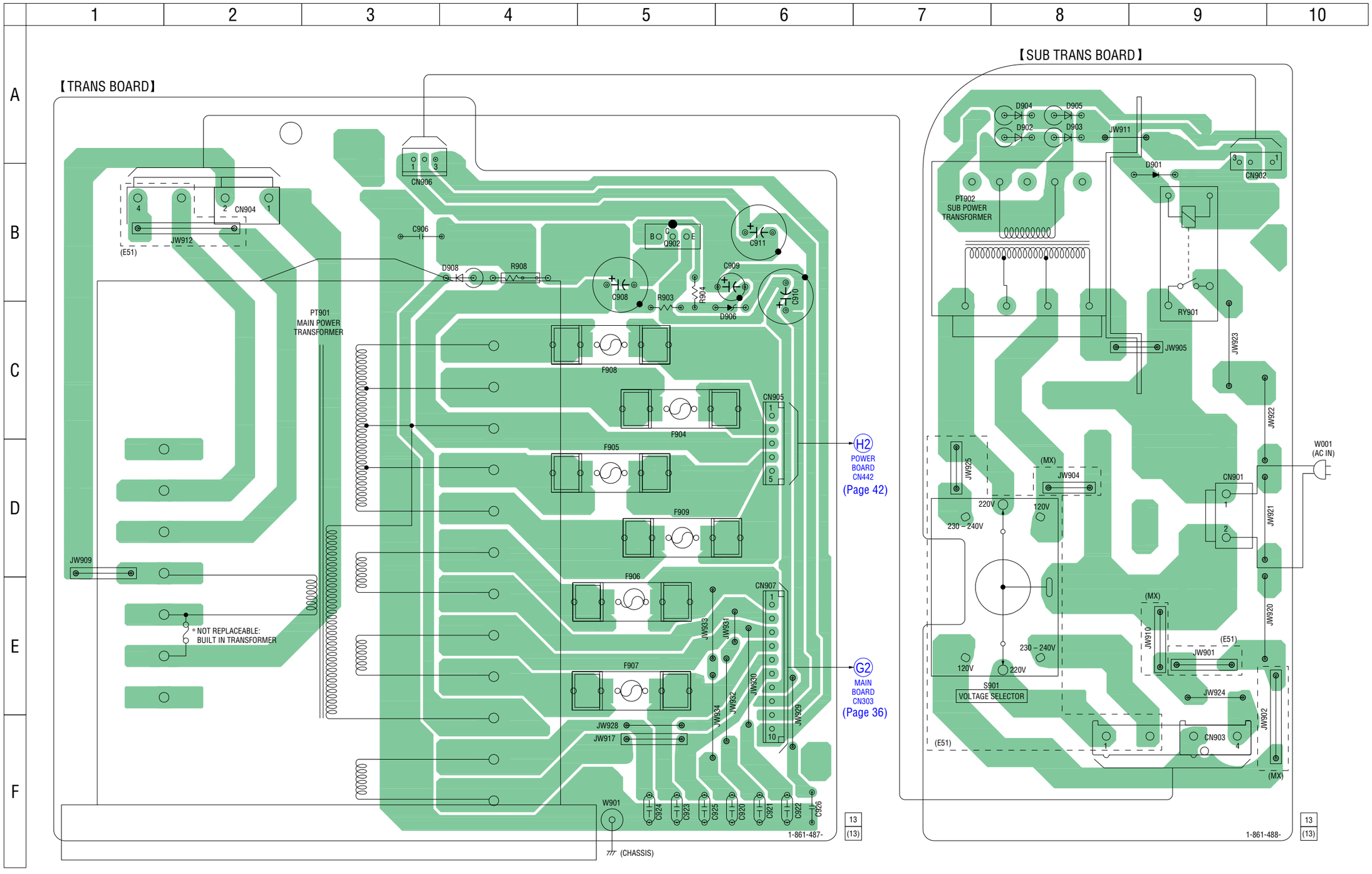

6-26. SCHEMATIC DIAGRAM – TRANS Section – (E51, MX only)

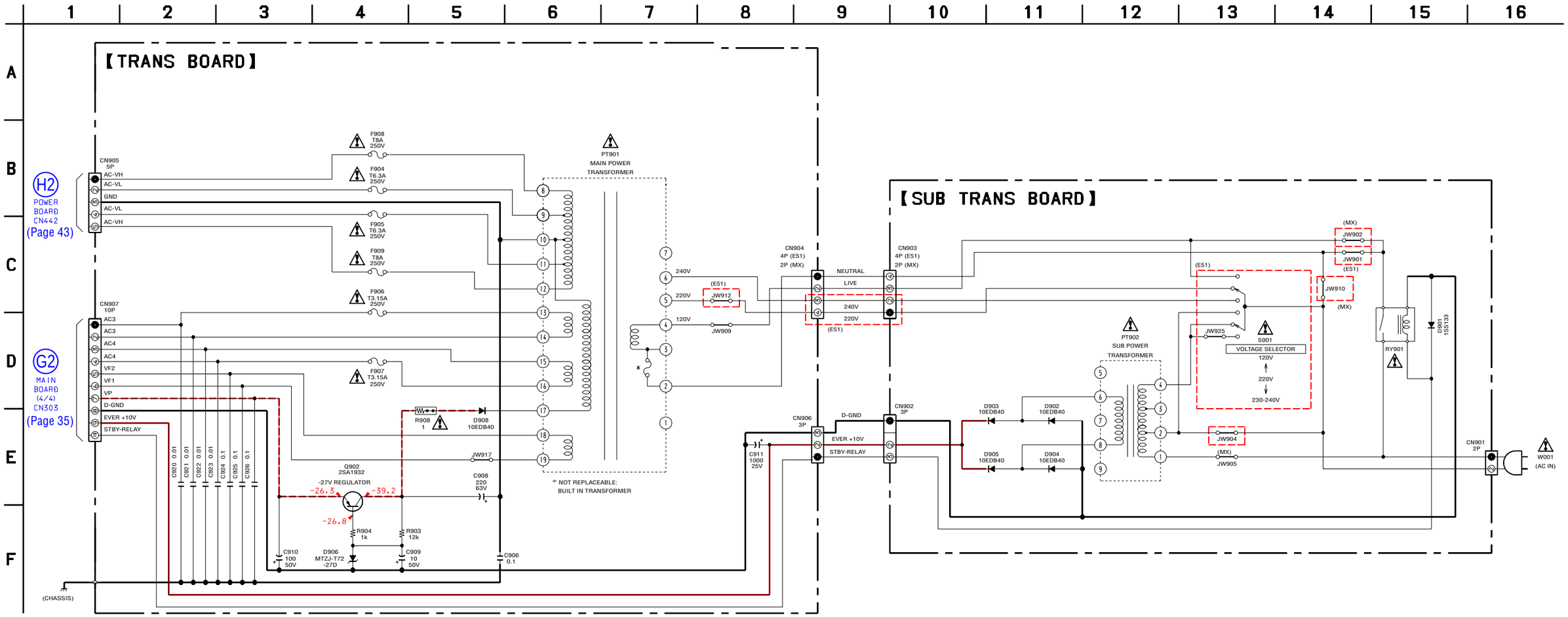

The components identified by mark ⚠ or dotted line with mark ⚠ are critical for safety.
Replace only with part number specified.

- **Waveforms**

– CD Board –

① **IC101 ⑥③ (LRCK)**

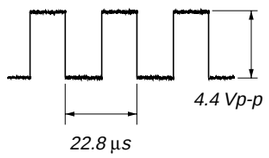

1V/DIV, 10 µs/DIV

② **IC101 ⑥⑥ (BCK)**

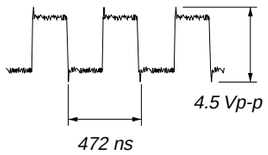

1V/DIV, 200ns/DIV

③ **IC101 ⑦⑦ (XTAO)**

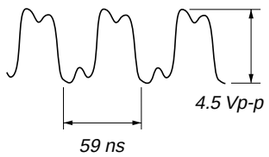

1V/DIV, 20ns/DIV

④ **IC101 ④① (RFACO)**

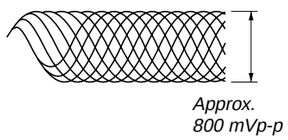

0.2V/DIV, 0.5 µs/DIV

– MAIN Board –

⑤ **L101 ⑤ (REC Mode)**

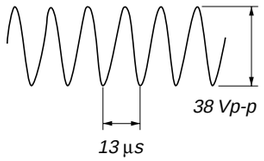

10V/DIV, 5 µs/DIV

– PANEL Board –

⑪ **IC601 ⑬ (I-XT2)**

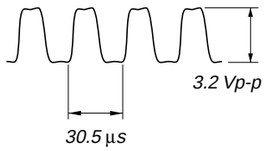

1V/DIV, 10 µs/DIV

⑫ **IC601 ⑯ (CF2)**

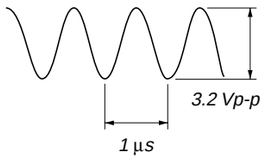

1V/DIV, 0.1 µs/DIV

- **IC Block Diagrams**

– CD Board –

IC101 CXD3059AR

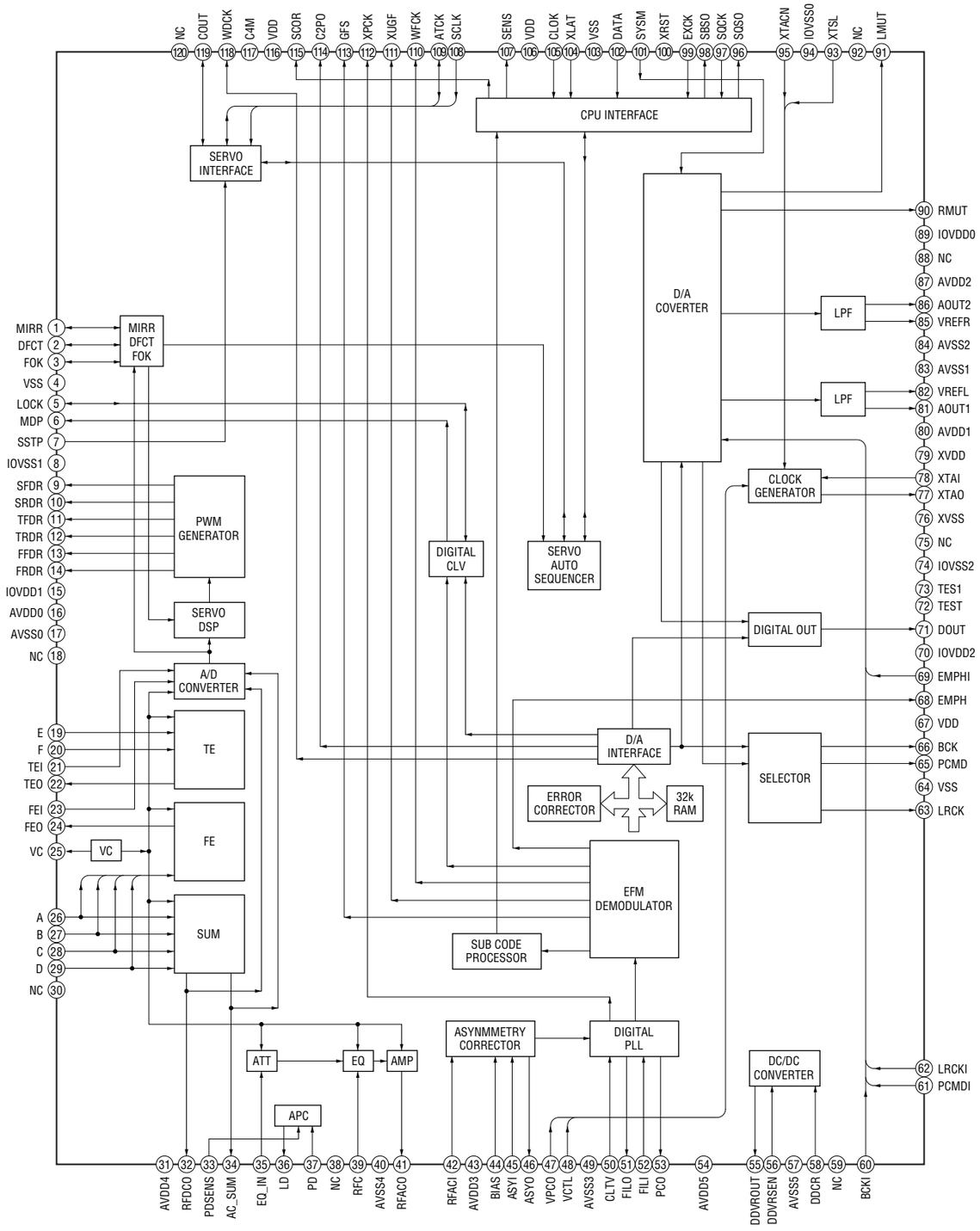

IC251 BA5947FM

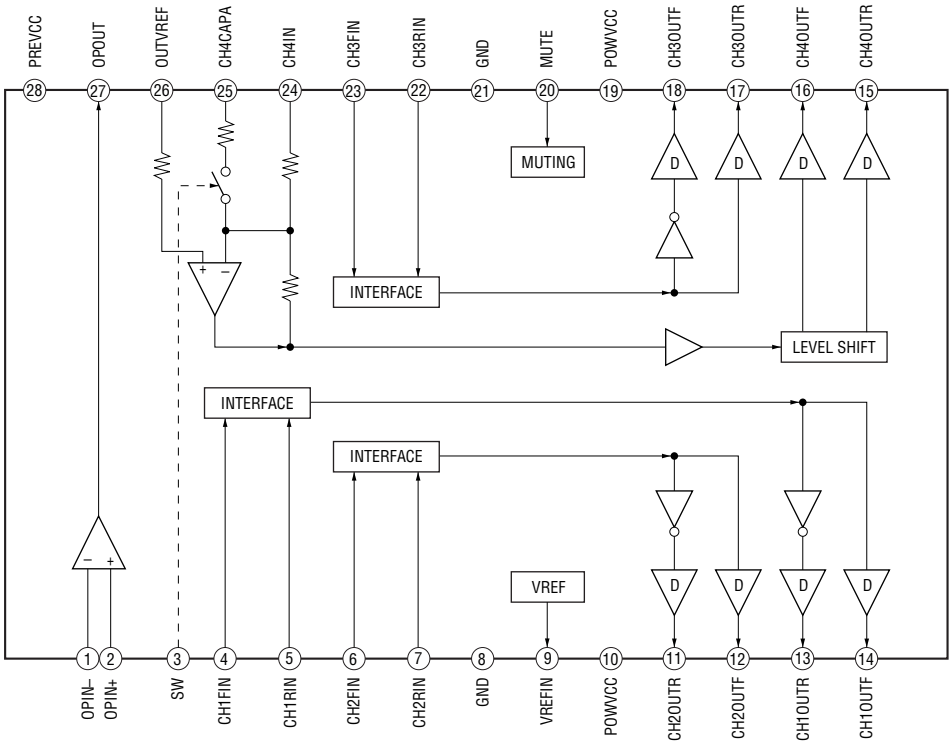

IC301 TC94A34FG-002

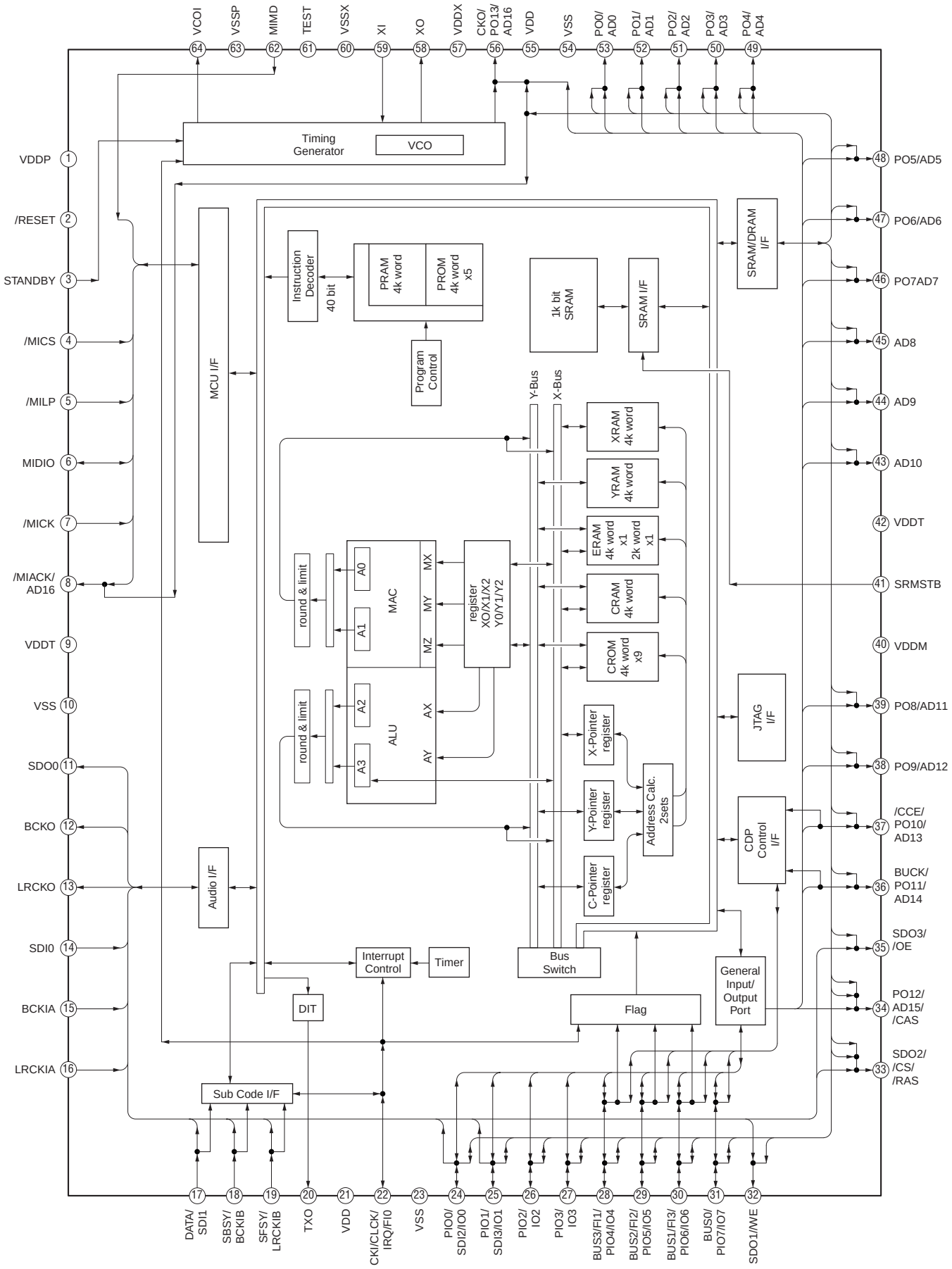

IC303 BH15FB1WG

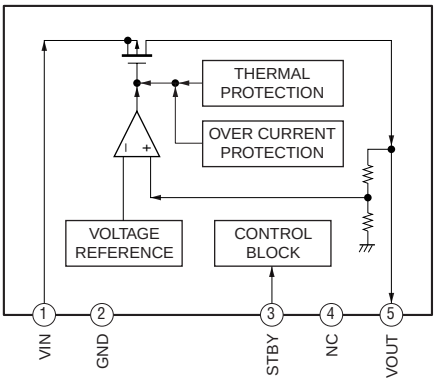

– DRIVER Board –

IC701, 712 BA6956AN

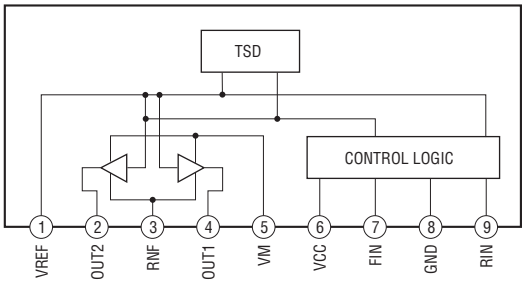

– MAIN Board –

IC101 BD3401KS2

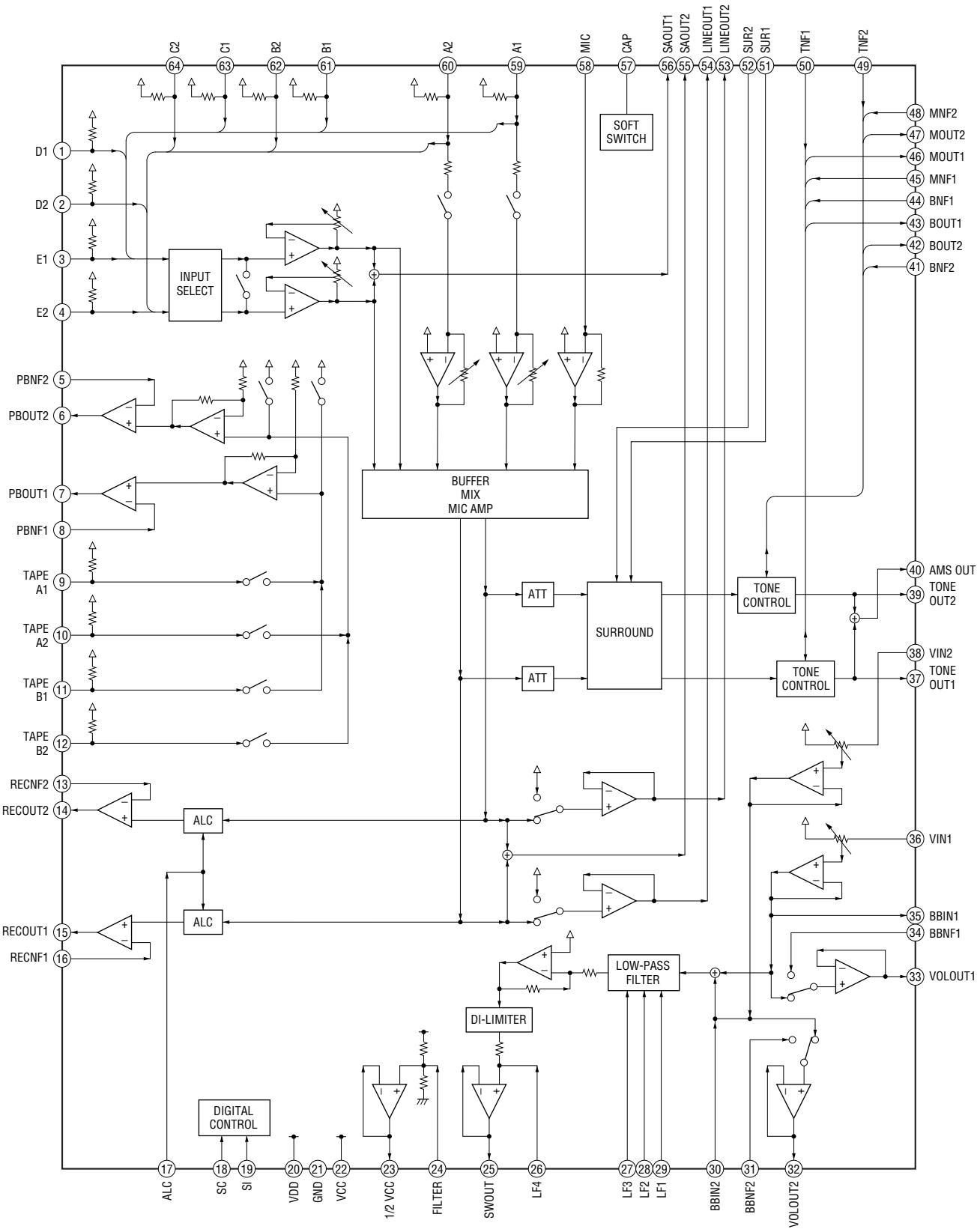

IC201 BA3126N

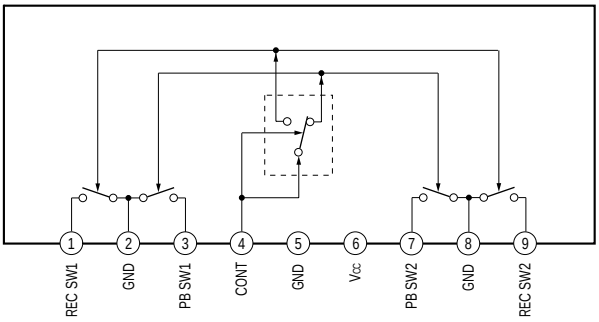

- **IC Pin Function Description**

MAIN BOARD IC371 BU2099FV (LOADING/TABLE MOTOR DRIVER)

Pin No.	Pin Name	I/O	Description
1	VSS	—	Ground terminal
2	N.C.	—	Not used
3	DATA	I	Serial data input from the motor/plunger driver
4	CLOCK	I	Serial data transfer clock signal input from the system controller
5	LCH	I	Latch pulse signal input from the system controller
6	Q0	O	Recording/playback selection signal output terminal
7	BIAS	O	Recording bias control signal output terminal
8, 9	Q2, Q3	O	Not used
10	Q4	O	CD muting on/off control signal output terminal
11	Q5	O	Tuner muting on/off control signal output to the FM/AM tuner pack
12	Q6	O	Power amplifier on/off control signal output terminal
13	Q7	O	Loading motor drive signal output terminal
14	Q8	O	Loading motor drive signal output terminal
15	Q9	O	Table motor drive signal output terminal
16	Q10	O	Table motor drive signal output terminal
17	Q11	O	Front speaker on/off relay drive control signal output terminal
18	SO	O	Serial data output terminal Not used
19	OE	—	Not used
20	VDD	—	Power supply terminal (+3.3V)

PANEL BOARD IC601 LC876996A-53H2-E (SYSTEM CONTROLLER)

Pin No.	Pin Name	I/O	Description
1	O-MP3 CS	O	Chip select signal output to the MP3 decoder
2	O-MP3 LP	O	Latch pulse signal output to the MP3 decoder
3	I-MP3 ACK	I	Acknowledge signal input from the MP3 decoder
4	I-MP3 REQ	I	Request signal input from the MP3 decoder
5	I-SCOR (Q-DATA REQ)	I	Subcode Q data request signal input from the CD DSP
6	O-$\overline{\text{MP3 RESET}}$	O	Reset signal output to the MP3 decoder "L": reset
7	I-BU1924 DATA	I	RDS serial data input from the FM/AM tuner pack (AEP, UK only)
8	I-BU1924 CLK	I	RDS serial data transfer clock signal input from the FM/AM tuner pack (AEP, UK only)
9	I-VOLUME-IN1	I	Jog dial pulse input terminal (VOLUME)
10	I-VOLUME-IN2	I	Jog dial pulse input terminal (VOLUME)
11	$\overline{\text{RESET}}$	I	System reset signal input terminal "L": reset For several hundreds msec. after the power supply rises, "L" is input, then it changes to "H"
12	I-XT1	I	System clock input terminal (32.768 kHz)
13	O-XT2	O	System clock output terminal (32.768 kHz)
14	VSS1	—	Ground terminal
15	CF1	I	System clock input terminal (10 MHz)
16	CF2	O	System clock output terminal (10 MHz)
17	VDD1	—	Power supply terminal (+3.3V)
18	I-$\overline{\text{PROTECT}}$	I	Protect signal input from the amplifier circuit
19	WFR/HP/MIC-IN	I	Headphone detection signal input from the electrical volume
20	I-CD ENCODER	I	Disc tray address detection signal input terminal
21	I-CD OPEN/CLOSE	I	Disc tray open/close detection signal input terminal
22	I-TAPE A STAT	I	Deck-A cassette detection signal, deck-A mode detection signal and recording (reverse direction) detection signal input terminal (A/D input)
23	I-TAPE B STAT	I	Deck-B cassette detection signal, deck-B mode detection signal and recording (forward direction) detection signal input terminal (A/D input)
24	I-STREAM/VACS	I	VACS/stream signal input terminal (A/D input)
25 to 27	I-KEY3 to I-KEY1	I	Front panel key input terminal (A/D input)
28	I-$\overline{\text{SIRCS IN}}$	I	Remote control signal input terminal
29	I-AC CUT	I	AC detection signal input terminal "L": AC off
30 to 42	G13 to G1	O	Grid drive signal output to the fluorescent indicator tube
43 to 45	S1 to S3	O	Segment drive signal output to the fluorescent indicator tube
46	VDD3	—	Power supply terminal (+3.3V)
47 to 50	S4 to S7	O	Segment drive signal output to the fluorescent indicator tube
51	–VPP	—	Power supply terminal (–27V)
52 to 65	S8 to S21	O	Segment drive signal output to the fluorescent indicator tube
66	I-SPEC/ MODEL/METER	I	Destination setting signal, model setting signal and VACS/stream gain control signal input terminal
67	I-TUNED-IN	I	Tuning detection signal input from the FM/AM tuner pack "L": tuned
68	I-STEREO-IN	I	FM stereo detection signal input from the FM/AM tuner pack "L": stereo
69	I-AMS-IN	I	Auto music sensor detection signal input from the electrical volume "L": music is present, "H": music is not present
70	I-REEL-A-IN	I	Deck-A tape reel rotating detection signal input terminal
71	I-REEL-B-IN	I	Deck-B tape reel rotating detection signal input terminal

Pin No.	Pin Name	I/O	Description
72	VDD4	—	Power supply terminal (+3.3V)
73	I-CD NUM SENSOR	I	CD table address detection signal input terminal
74	O-POWER RELAY	O	Power on/off control signal output terminal "H": power on
75	O-SYSTEM-MUTE	O	System muting on/off control signal output terminal "H": muting on
76	O-POWER LED	O	LED drive signal output of the I/⏻ (power) indicator "H": LED on
77	O-I-BASS LED	O	LED drive signal output of the i-BASS indicator "H": LED on
78 to 80	NONE	O	Not used
81	I-MULTI-JOG IN1	I	Jog dial pulse input terminal (MULTI JOG)
82	I-MULTI-JOG IN2	I	Jog dial pulse input terminal (MULTI JOG)
83	I-LC72121 DI	I	Serial data input from the FM/AM tuner pack
84	O-LC72121 CE	O	Chip enable signal output to the FM/AM tuner pack
85	O-LC72121/ BU2099FV DO	O	Serial data output to the FM/AM tuner pack and motor/plunger drive
86	O-LC72121/ BU2099FV CLK	O	Serial data transfer clock signal output to the FM/AM tuner pack, loading/table motor driver and motor/plunger driver
87	O-BU2099FV LCH	O	Latch pulse signal output to the loading/table motor driver and motor/plunger driver
88	O-BU3401 CLK	O	Serial data transfer clock signal output to the electrical volume
89	VSS2	—	Ground terminal
90	VDD2	—	Power supply terminal (+3.3V)
91	O-BU3401 DATA	O	Serial data output to the electrical volume
92	O-XTCN	O	Oscillator control signal output to the CD DSP
93	$\overline{\text{O-X-RES (RESET)}}$	O	Reset signal output to the CD DSP and motor/coil driver "L": reset
94	O-XLT (CD-LAT)	O	Latch pulse signal output to the CD DSP
95	O-CD-DATA	O	Serial data output to the CD DSP
96	I-SENS	I	Serial data input from the CD DSP
97	O-CD-CLK	O	Serial data transfer clock signal output to the CD DSP
98	O-MP3-DO	O	Serial data output to the MP3 decoder
99	I-MP3-DI	I	Serial data input from the MP3 decoder
100	O-MP3-CLK	O	Serial data transfer clock signal output to the MP3 decoder

PANEL BOARD IC602 BU2099FV (MOTOR/PLUNGER DRIVER)

Pin No.	Pin Name	I/O	Description
1	VSS	—	Ground terminal
2	NC	—	Not used
3	DATA	I	Serial data input from the system controller
4	CLOCK	I	Serial data transfer clock signal input from the system controller
5	LCH	I	Latch pulse signal input from the system controller
6	SOL-A	O	Deck-A side trigger plunger drive signal output terminal
7	SOL-B	O	Deck-B side trigger plunger drive signal output terminal
8	MOTOR	O	Capstan/reel motor drive signal output terminal
9, 10	NC	—	Not used
11	MP3-STB	O	Standby signal output to the MP3 decoder
12 to 17	NC	—	Not used
18	SO	O	Serial data output to the loading/table motor driver
19	$\overline{OE}$	—	Not used
20	VDD	—	Power supply terminal (+3.3V)

SECTION 7
EXPLODED VIEWS

NOTE:
- -XX and -X mean standardized parts, so they may have some difference from the original one.
- Color Indication of Appearance Parts
  Example:
  KNOB, BALANCE (WHITE) . . . (RED)
  ↑ Parts Color ↑ Cabinet's Color
- Items marked "*" are not stocked since they are seldom required for routine service. Some delay should be anticipated when ordering these items.
- The mechanical parts with no reference number in the exploded views are not supplied.
- Abbreviation
  E51 : Chilean and Peruvian models
  MX : Mexican model

The components identified by mark ⚠ or dotted line with mark ⚠ are critical for safety.
Replace only with part number specified.

7-1. CASE SECTION

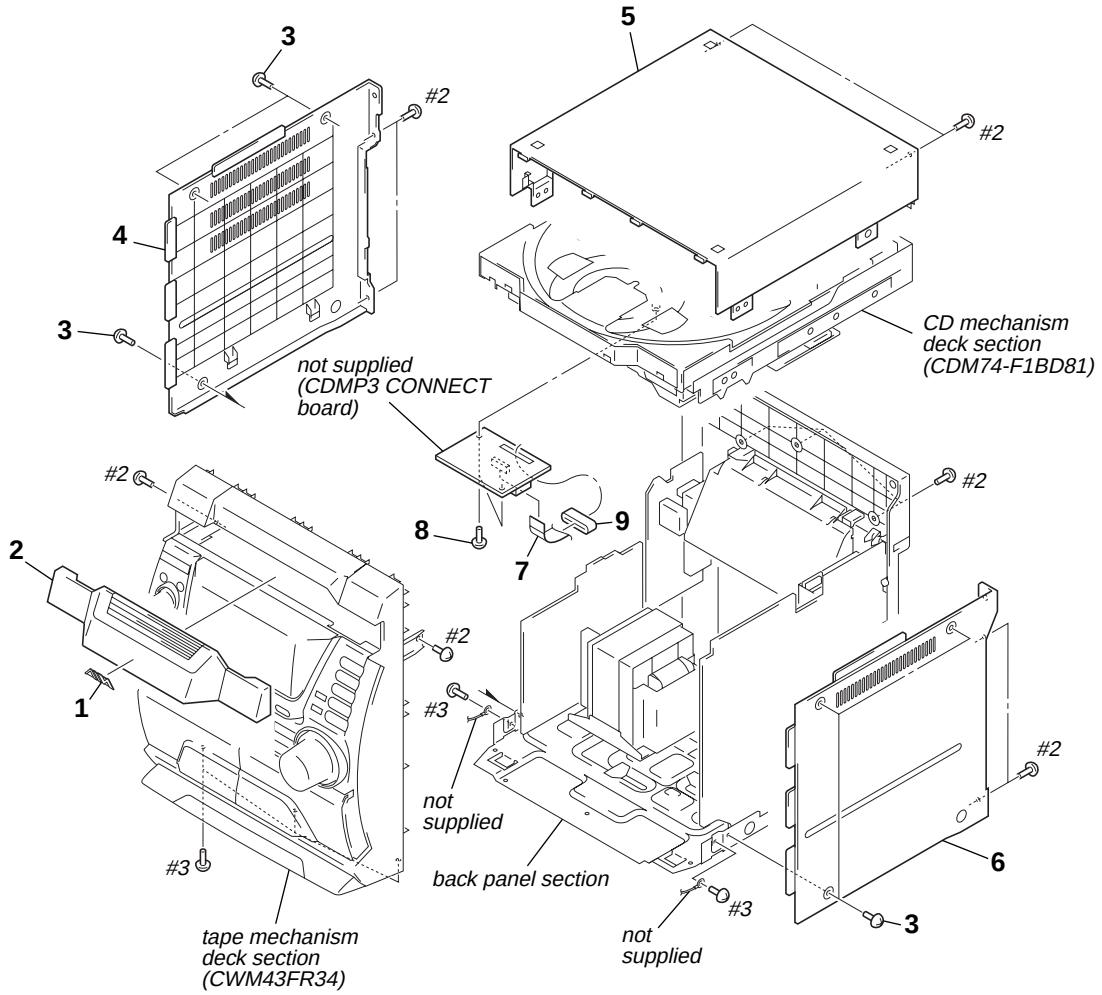

Ref. No.	Part No.	Description	Remark
1	4-245-158-01	EMBLEM	
2	4-252-696-01	PANEL, TRAY	
3	3-363-099-32	SCREW (CASE 3 TP2)	
4	4-245-183-91	CASE (SIDE-L)	
5	4-244-849-91	CASE (TOP)	
6	4-245-184-91	CASE (SIDE-R)	
7	1-775-251-11	WIRE (FLAT TYPE) (27 CORE)	
8	4-951-620-01	SCREW (2.6X8), +BVTP	
9	1-469-854-11	CORE, FERRITE	
#2	7-685-647-79	SCREW +BVTP 3X10 TYPE2 IT-3	
#3	7-685-646-79	SCREW +BVTP 3X8 TYPE2 IT-3	

7-2. TAPE MECHANISM DECK SECTION (CWM43FR34)

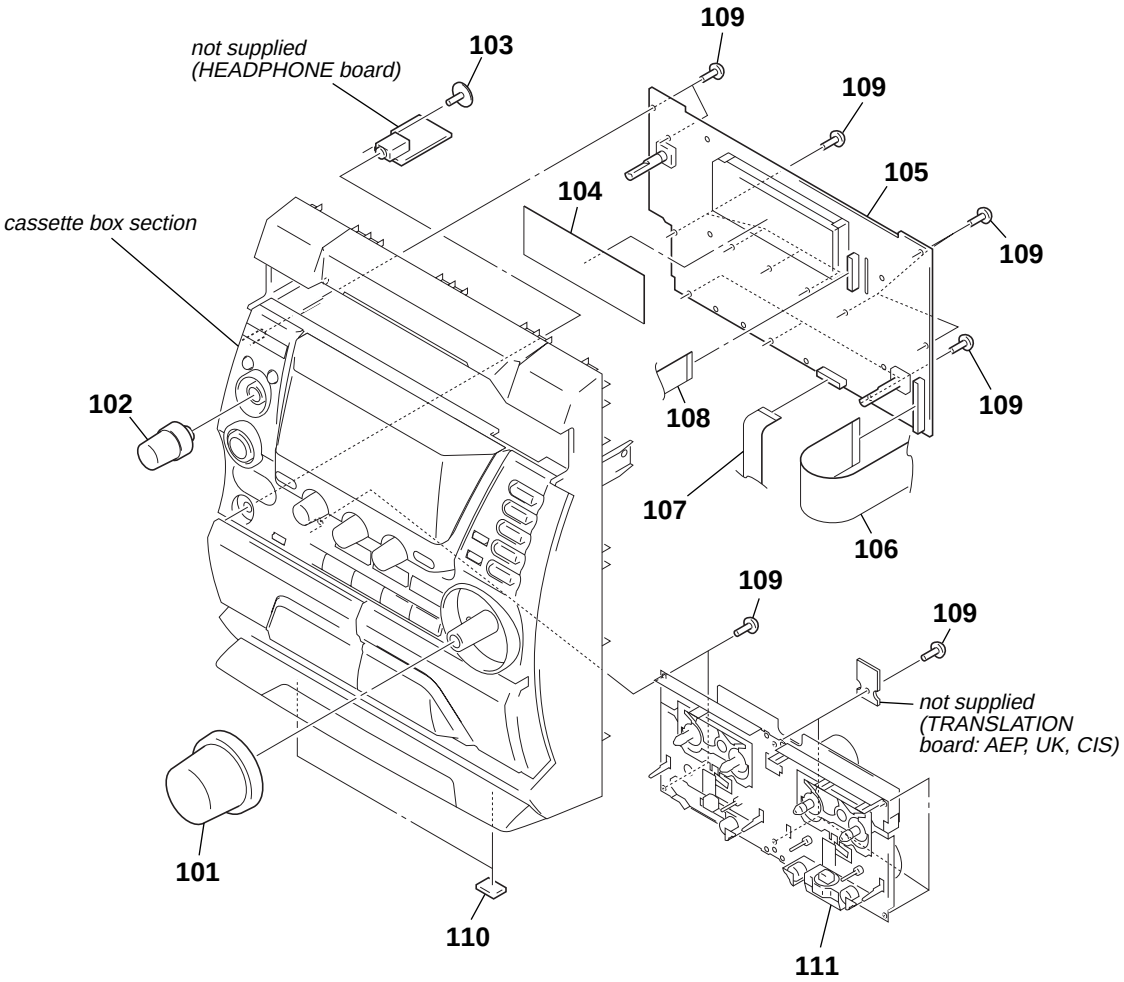

Ref. No.	Part No.	Description	Remark
101	4-252-707-01	KNOB (VOL), PLATING ROTARY	
102	4-252-709-01	KNOB (AMS), PLATING ROTARY	
103	3-229-336-01	SCREW, +BVWH TAPPING	
104	4-252-718-01	SHEET, FL	
105	A-4751-484-A	PANEL BOARD, COMPLETE (AEP, UK)	
105	A-4751-493-A	PANEL BOARD, COMPLETE (E51, MX)	
105	A-4751-564-A	PANEL BOARD, COMPLETE (CIS)	
106	1-773-288-11	WIRE (FLAT TYPE) (29 CORE) (E51, MX)	
106	1-773-322-11	WIRE (FLAT TYPE) (31 CORE) (AEP, UK, CIS)	
107	1-827-145-11	WIRE (FLAT TYPE) (13 CORE)	
108	1-773-048-11	WIRE (FLAT TYPE) (17 CORE)	
109	4-951-620-01	SCREW (2.6X8), +BVTP	
110	4-225-252-01	CUSHION (FOOT)	
111	1-796-486-71	DECK, MECHANICAL (CWM43FR34)	

7-3. CASSETTE BOX SECTION

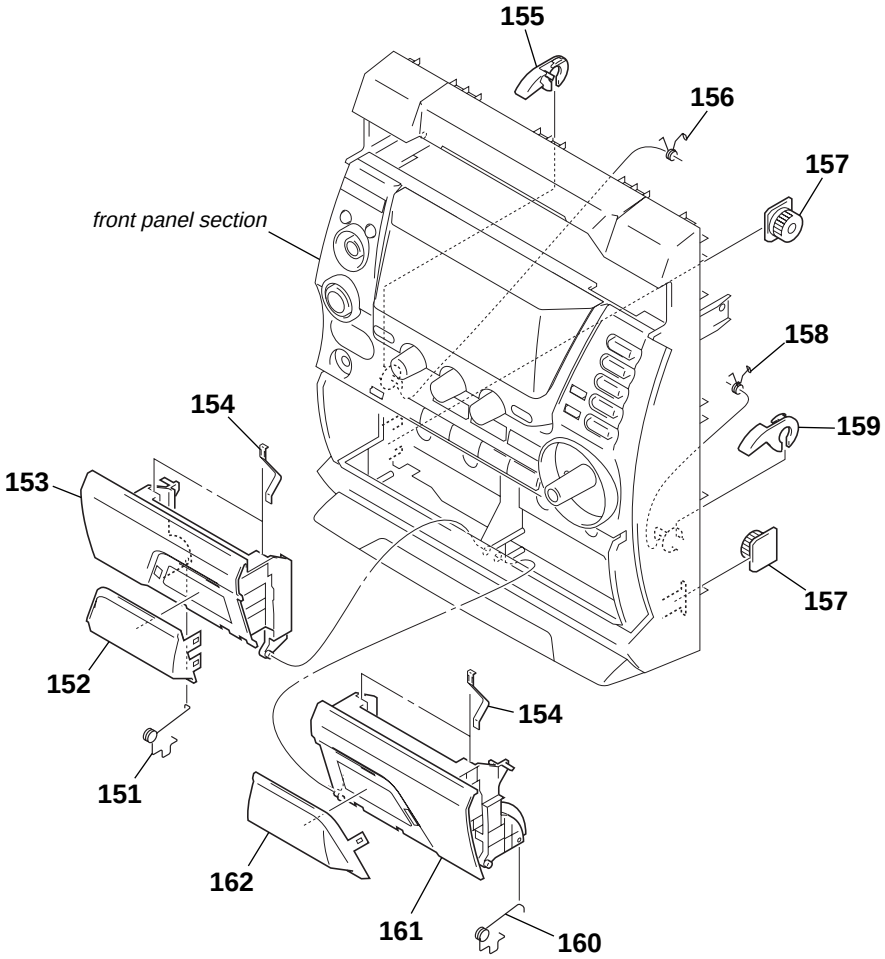

Ref. No.	Part No.	Description	Remark	Ref. No.	Part No.	Description	Remark
151	4-252-715-01	SPRING (BOX CASS L), TORSION		157	4-224-104-41	DAMPER	
152	4-252-698-01	WINDOW (L), CASSETTE		158	4-231-841-01	SPRING (HEART CAM-B)	
153	4-252-695-01	BOX (L), CASSETTE		159	4-231-825-01	CAM (B), HEART	
154	4-238-631-01	TAPE SPRING		160	4-252-716-01	SPRING (BOX CASS R), TORSION	
155	4-231-824-01	CAM (A), HEART		161	4-252-694-01	BOX (R), CASSETTE	
156	4-231-836-01	SPRING (HEART CAM-A)		162	4-252-699-01	WINDOW (R), CASSETTE	

7-4. FRONT PANEL SECTION

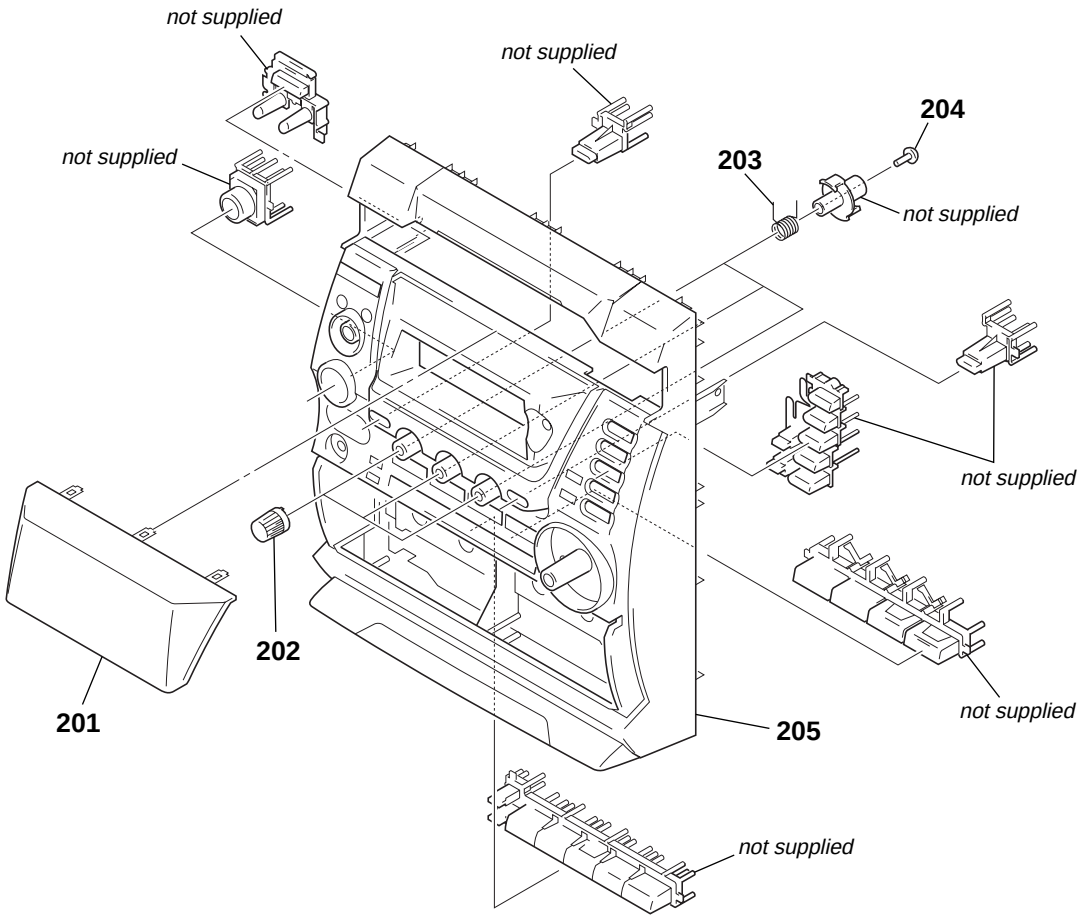

Ref. No.	Part No.	Description	Remark	Ref. No.	Part No.	Description	Remark
201	4-252-697-61	WINDOW, DISPLAY (AEP, UK)		203	4-252-717-01	SPRING (BASS), TORSION	
201	4-252-697-71	WINDOW, DISPLAY (CIS)		204	4-218-253-72	SCREW (M2.6), +BTTP (AEP, UK, E51, MX)	
201	4-252-697-81	WINDOW, DISPLAY (E51, MX)		204	4-951-620-11	SCREW (2.6X10), +BVTP (CIS)	
202	4-252-710-01	KNOB (BASS), PLATING ROTARY		205	4-252-693-01	PANEL, FRONT	

7-5. BACK PANEL SECTION

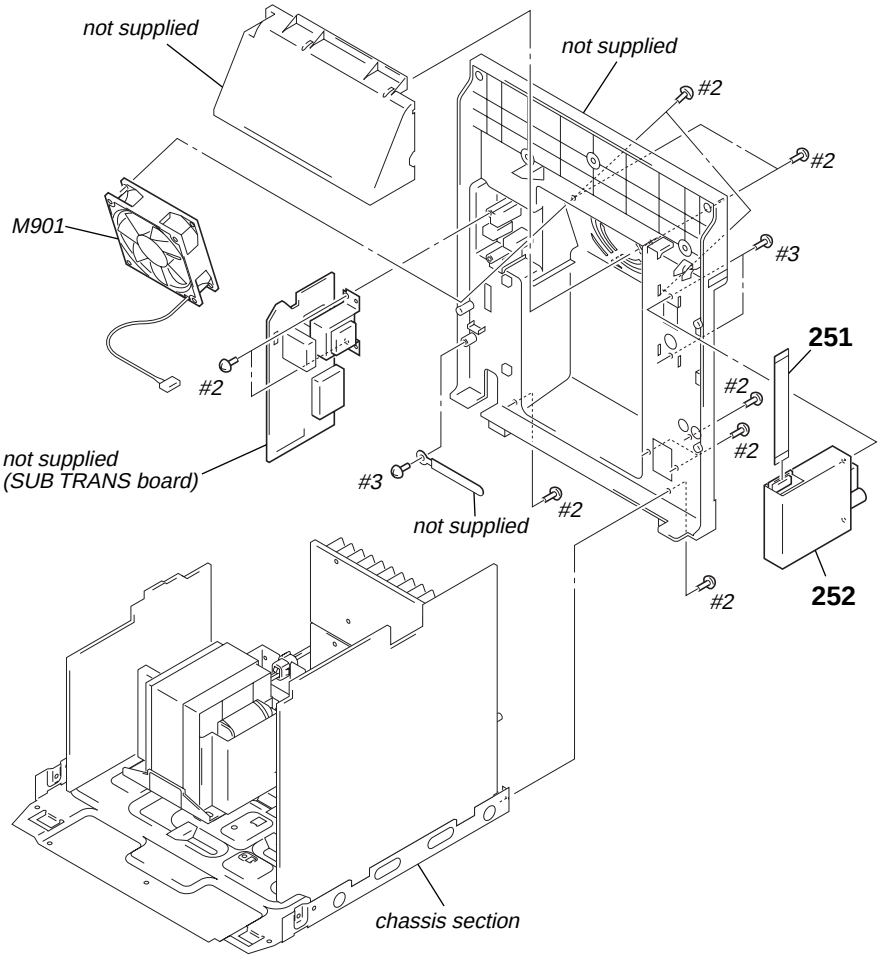

Ref. No.	Part No.	Description	Remark
251	1-769-940-11	WIRE (FLAT TYPE) (11 CORE) (E51, MX)	
251	1-777-353-11	WIRE (FLAT TYPE) (15 CORE) (AEP, UK, CIS)	
252	1-693-615-11	TUNER (FM/AM) (E51, MX)	
252	1-693-616-11	TUNER (FM/AM) (AEP, UK)	
252	1-693-654-11	TUNER (FM/AM) (CIS)	

Ref. No.	Part No.	Description	Remark
M901	1-763-072-11	FAN, DC (E51)	
M901	1-763-117-13	FAN, DC (EXCEPT E51)	
#2	7-685-647-79	SCREW +BVTP 3X10 TYPE2 IT-3	
#3	7-685-646-79	SCREW +BVTP 3X8 TYPE2 IT-3	

7-6. CHASSIS SECTION

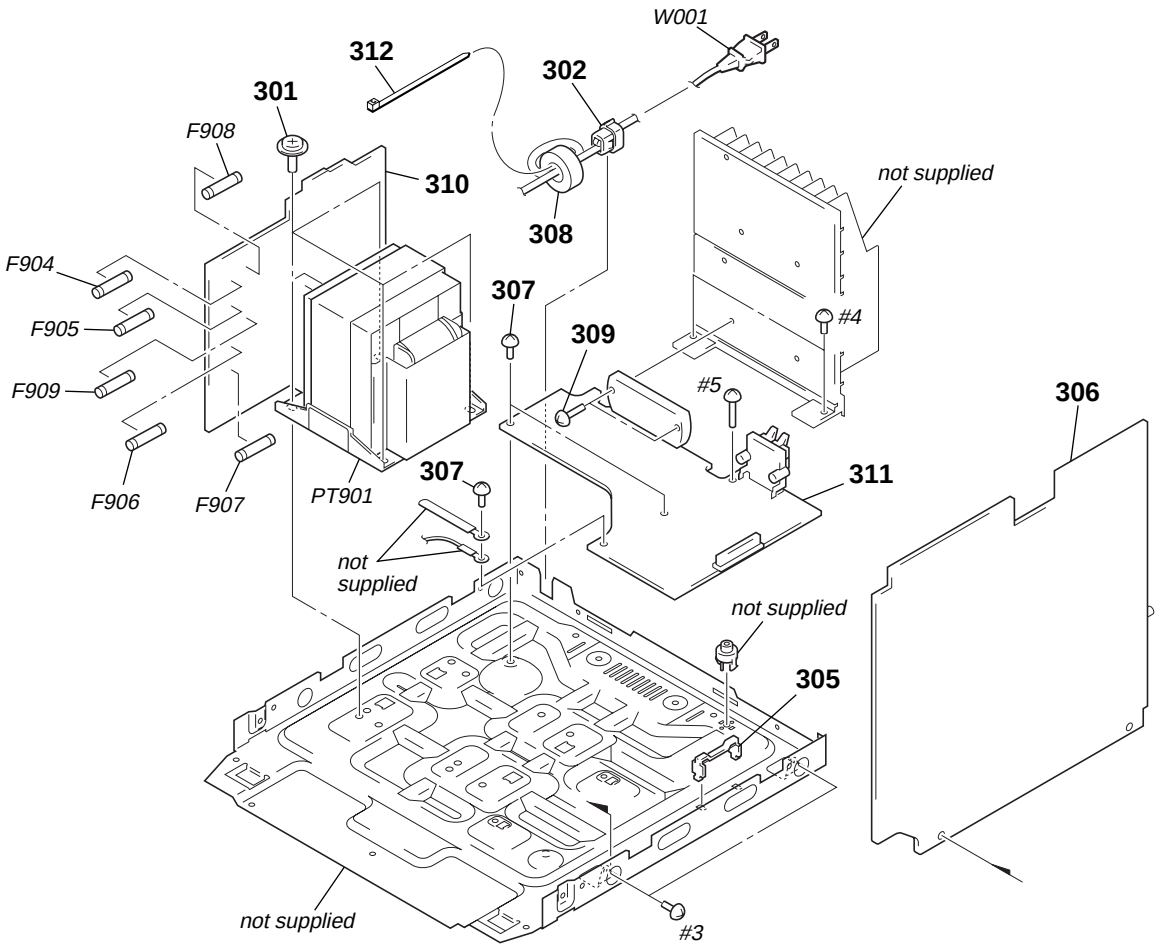

The components identified by mark ⚠ or dotted line with mark ⚠ are critical for safety.
Replace only with part number specified.

Ref. No.	Part No.	Description	Remark
301	4-900-386-01	SCREW	
302	3-703-244-00	BUSHING (2104), CORD (EXCEPT MX)	
* 302	3-703-571-12	BUSHING (S) (4516), CORD (MX)	
305	4-988-533-01	HOLDER, PWB	
306	A-4751-486-A	MAIN BOARD, COMPLETE (AEP, UK)	
306	A-4751-495-A	MAIN BOARD, COMPLETE (E51, MX)	
306	A-4752-928-A	MAIN BOARD, COMPLETE (CIS)	
307	4-242-539-01	BVIT3B+3-8R W/O SLOT	
308	1-400-285-11	F-BEAD, E2515MRT	
309	3-905-609-31	SCREW (TRANSISTOR) (CIS)	
309	3-905-609-41	SCREW (TRANSISTOR) (EXCEPT CIS)	
310	A-4751-489-A	TRANS BOARD, COMPLETE (AEP, UK, CIS)	
310	A-4751-498-A	TRANSFORMER BOARD, COMPLETE (E51)	
310	A-4752-953-A	TRANSFORMER BOARD, COMPLETE (MX)	
311	A-4751-490-A	POWER BOARD, COMPLETE (AEP, UK, CIS)	
311	A-4751-499-A	POWER BOARD, COMPLETE (E51)	
311	A-4752-996-A	POWER BOARD, COMPLETE (MX)	
312	4-059-585-01	TIE, CABLE	
⚠F904	1-533-473-12	FUSE, GLASS TUBE (DIA. 5) (T6.3A/250V)	(E51, MX)
⚠F904	1-576-655-12	FUSE, GLASS TUBE (DIA. 5) (T8A/250V)	(AEP, UK, CIS)
⚠F905	1-533-473-12	FUSE, GLASS TUBE (DIA. 5) (T6.3A/250V)	(E51, MX)
⚠F905	1-576-655-12	FUSE, GLASS TUBE (DIA. 5) (T8A/250V)	(AEP, UK, CIS)
⚠F906	1-533-470-12	FUSE, GLASS TUBE (DIA. 5) (T3.15AL/250V)	
⚠F907	1-533-470-12	FUSE, GLASS TUBE (DIA. 5) (T3.15AL/250V)	
⚠F908	1-576-655-12	FUSE, GLASS TUBE (DIA. 5) (T8A/250V)	(E51, MX)
⚠F909	1-576-655-12	FUSE, GLASS TUBE (DIA. 5) (T8A/250V)	(E51, MX)
⚠PT901	1-443-234-11	TRANSFORMER, POWER (AEP, UK, CIS)	
⚠PT901	1-443-251-11	TRANSFORMER, POWER (E51)	
⚠PT901	1-443-295-11	TRANSFORMER, POWER (MX)	
⚠W001	1-777-071-83	CORD, POWER (EXCEPT MX)	
⚠W001	1-827-226-11	CORD, POWER (MX)	
#3	7-685-646-79	SCREW +BVTP 3X8 TYPE2 IT-3	
#4	7-685-881-09	SCREW +BVTT 4X8 (S)	
#5	7-685-649-79	SCREW +BVTP 3X14 TYPE2 IT-3	

7-7. CD MECHANISM DECK SECTION-1 (CDM74-F1BD81)

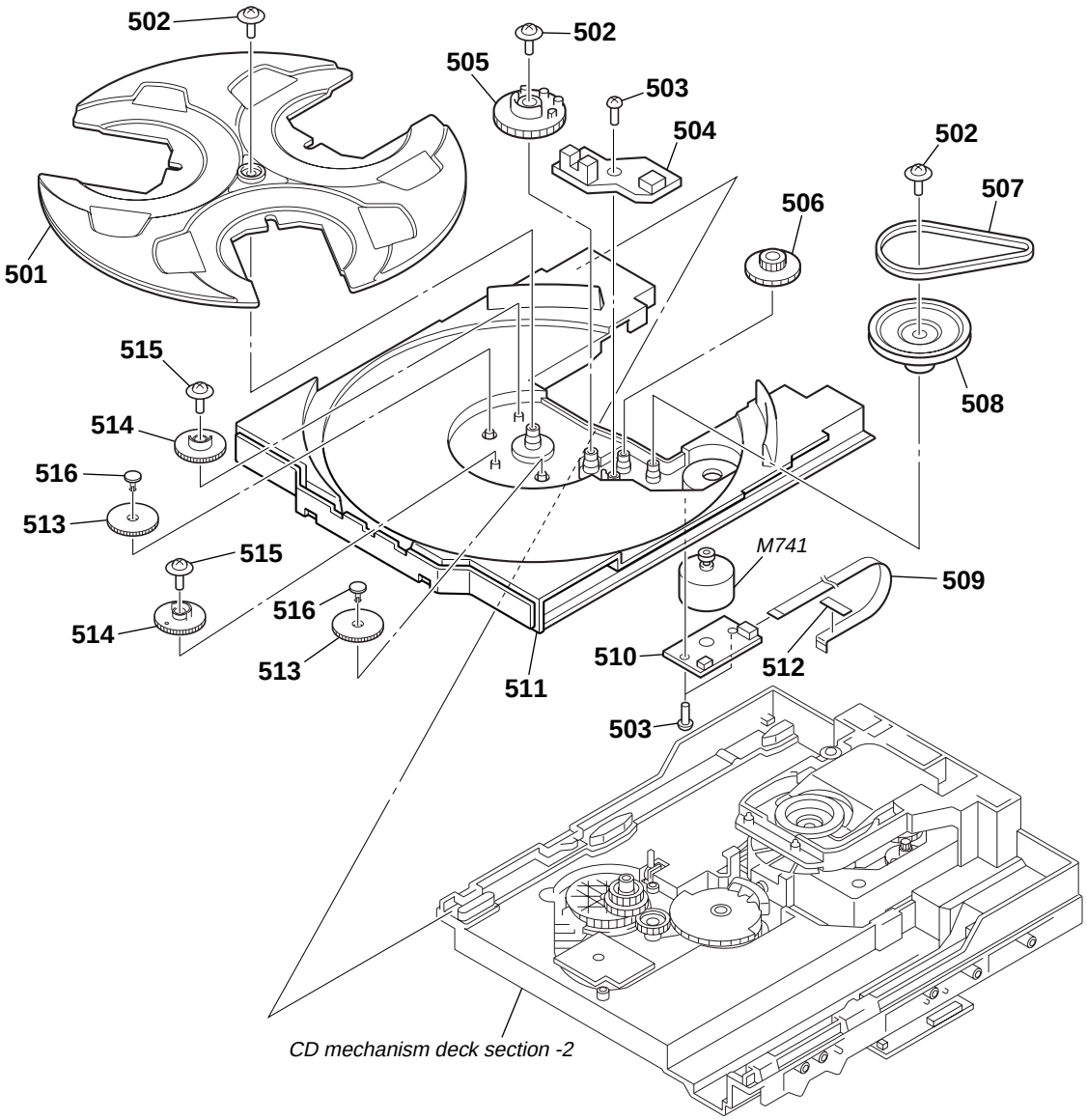

Ref. No.	Part No.	Description	Remark
501	4-243-815-01	TABLE (LOADING)	
502	4-218-252-61	SCREW (+PTPWH M2.6), FLOATING	
503	4-218-253-21	SCREW (M2.6), +BTTP	
504	1-687-132-12	SENSOR BOARD	
505	4-243-819-01	GEAR (GENEVA)	
506	4-243-820-01	GEAR (TABLE)	
507	4-243-823-01	BELT (TABLE)	
508	4-243-821-01	PULLEY (TABLE)	
509	1-776-182-11	WIRE (FLAT TYPE) (5 CORE)	
510	1-687-134-12	MOTOR (TB) BOARD	
511	4-243-816-01	TRAY	
512	3-321-598-01	SHEET (BA)	
513	4-245-570-01	GEAR (JOINT)	
514	4-245-571-02	GEAR (STOPPER)	
515	4-985-672-01	SCREW (+PTPWH M2.6), FLOATING	
516	4-245-572-01	BUSHING (GEAR)	
M741	A-4723-963-A	MOTOR ASSY, TABLE	

7-8. CD MECHANISM DECK SECTION-2 (CDM74-F1BD81)

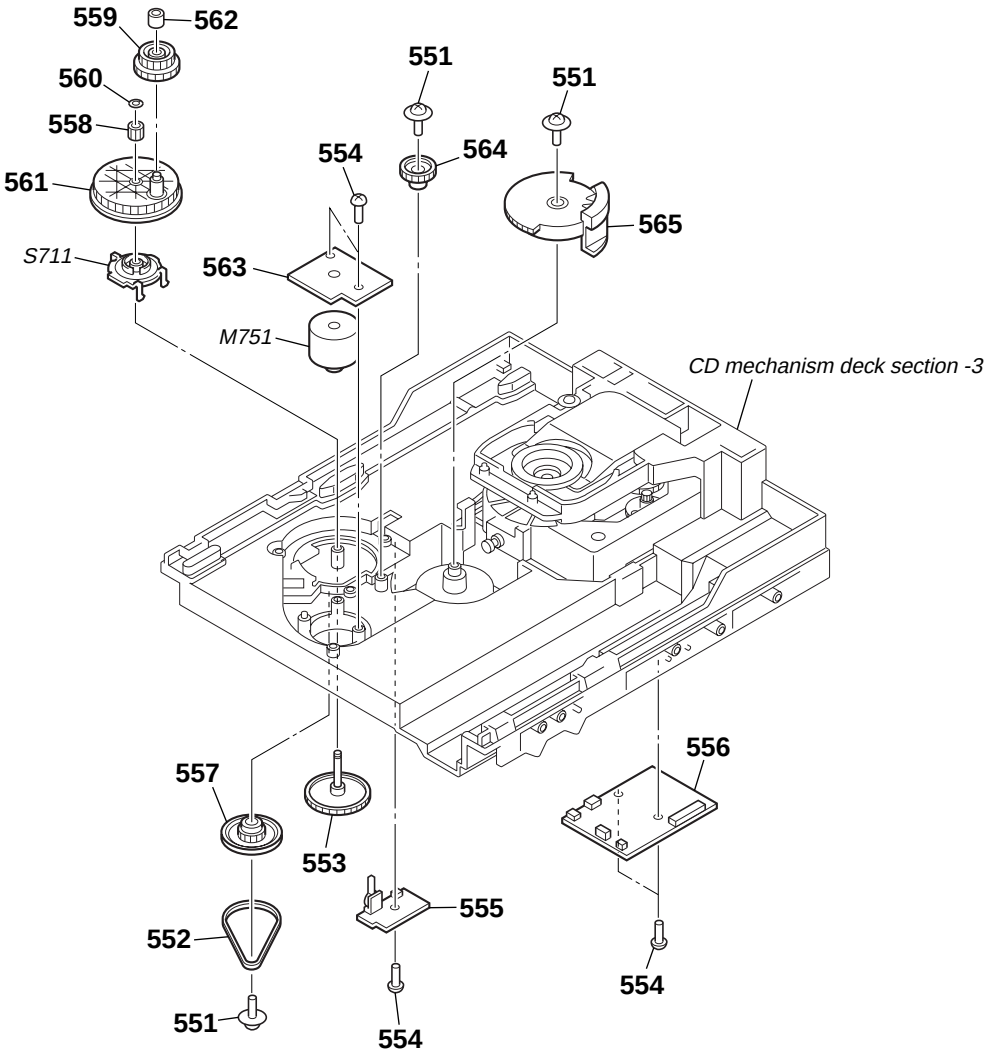

Ref. No.	Part No.	Description	Remark
551	4-218-252-61	SCREW (+PTPWH M2.6), FLOATING	
552	4-244-034-01	BELT (LOADING)	
553	4-224-613-01	GEAR (SHAFT)	
554	4-218-253-31	SCREW (M2.6), +BTTP	
555	1-687-669-12	SW BOARD	
556	1-687-135-12	DRIVER BOARD	
557	4-225-844-01	GEAR (LOADING A)	
558	4-224-611-01	GEAR (LOADING B)	
559	4-224-609-01	GEAR (LOADING C)	
560	3-016-533-11	WASHER (FR), STOPPER	
561	4-244-108-01	GEAR, SWING	
562	4-224-608-01	COLLAR, SWING	
563	1-687-133-12	MOTOR (LD) BOARD	
564	4-224-606-01	GEAR (RV)	
565	4-243-818-01	GEAR (U/D)	
M751	A-4736-655-A	MOTOR ASSY, LOADING	
S711	1-477-680-12	ENCODER, ROTARY (DISC TRAY ADDRESS DETECT)	

7-9. CD MECHANISM DECK SECTION-3 (CDM74-F1BD81)

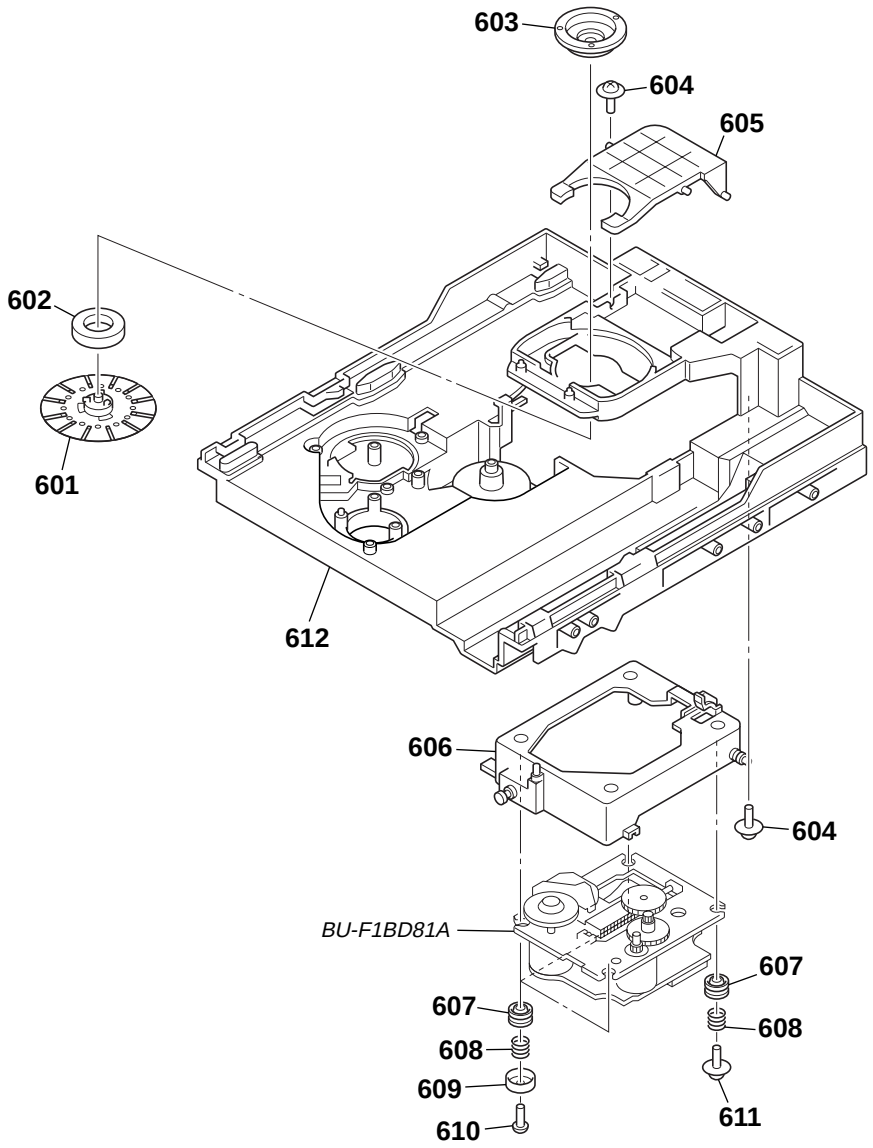

Ref. No.	Part No.	Description	Remark	Ref. No.	Part No.	Description	Remark
601	X-4955-707-2	PULLEY (A5) ASSY, CHUCKING		607	4-227-549-11	INSULATOR	
602	1-471-035-11	MAGNET ASSY		608	4-227-045-31	SPRING (INSULATOR), COIL	
603	4-231-189-01	PULLEY (B), CHUCKING		609	4-231-151-01	STOPPER (BU)	
604	4-218-252-61	SCREW (+PTPWH M2.6), FLOATING		610	4-218-253-31	SCREW (M2.6), +BTTP	
605	4-243-822-02	LEVER (LIFTER)		611	4-985-672-01	SCREW (+PTPWH M2.6), FLOATING	
606	X-4955-536-1	HOLDER (213) ASSY		612	4-243-817-01	CHASSIS	

7-10. BASE UNIT SECTION (BU-F1BD81A)

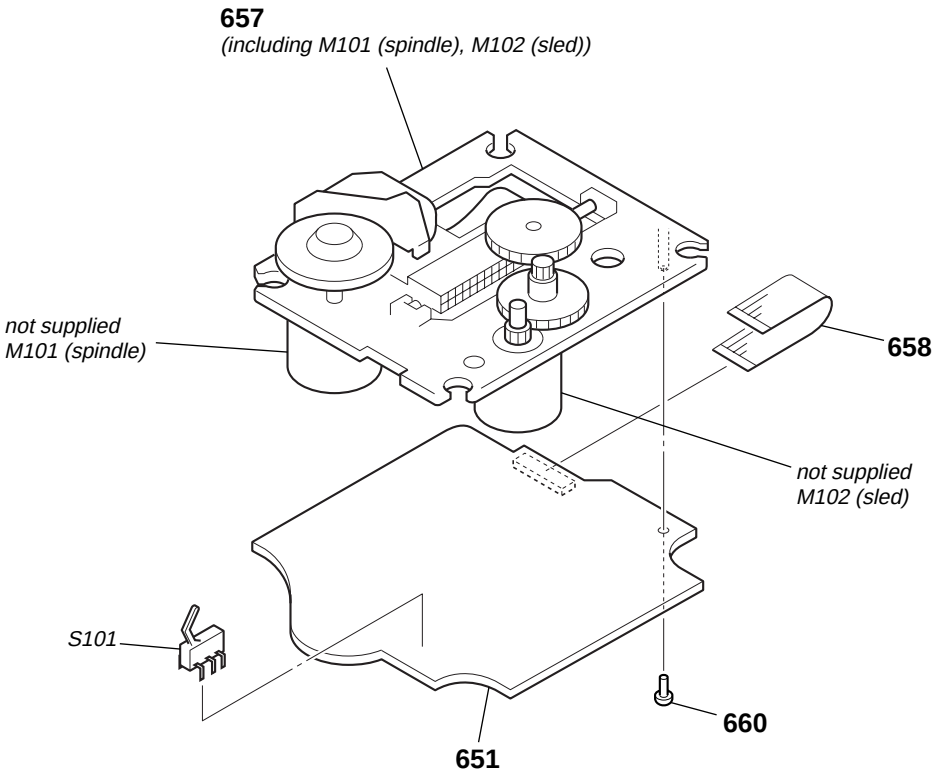

The components identified by mark ⚠ or dotted line with mark ⚠ are critical for safety.
Replace only with part number specified.

Ref. No.	Part No.	Description	Remark	Ref. No.	Part No.	Description	Remark
651	A-4751-431-A	CD BOARD, COMPLETE		660	4-951-620-01	SCREW (2.6X8), +BVTP	
⚠657	8-820-244-11	OPTICAL PICK-UP (KSM-215DCP/C2NP)		S101	1-771-853-11	SWITCH, DETECTION (LIMIT)	
658	1-827-992-11	WIRE (FLAT TYPE) (16 CORE)					

CD

SECTION 8
ELECTRICAL PARTS LIST

NOTE:
- Due to standardization, replacements in the parts list may be different from the parts specified in the diagrams or the components used on the set.
- -XX and -X mean standardized parts, so they may have some difference from the original one.
- RESISTORS
  All resistors are in ohms.
  METAL: Metal-film resistor.
  METAL OXIDE: Metal oxide-film resistor.
  F: nonflammable
- Abbreviation
  E51 : Chilean and Peruvian models
  MX : Mexican model
- Items marked "*" are not stocked since they are seldom required for routine service. Some delay should be anticipated when ordering these items.
- SEMICONDUCTORS
  In each case, u: µ, for example:
  uA. . : µA. . uPA. . : µPA. .
  uPB. . : µPB. . uPC. . : µPC. .
  uPD. . : µPD. .
- CAPACITORS
  uF: µF
- COILS
  uH: µH

The components identified by mark ⚠ or dotted line with mark ⚠ are critical for safety.
Replace only with part number specified.

When indicating parts by reference number, please include the board.

Ref. No.	Part No.	Description			Remark
	A-4751-431-A	CD BOARD, COMPLETE			
		**********			
		< CAPACITOR/SHORT >			
C10	1-165-989-11	CERAMIC CHIP	10uF	10%	6.3V
C11	1-165-989-11	CERAMIC CHIP	10uF	10%	6.3V
C14	1-164-360-11	CERAMIC CHIP	0.1uF		16V
C15	1-164-360-11	CERAMIC CHIP	0.1uF		16V
C16	1-115-156-11	CERAMIC CHIP	1uF		10V
C17	1-126-246-11	ELECT CHIP	220uF	20%	4V
C18	1-162-964-11	CERAMIC CHIP	0.001uF	10%	50V
C111	1-162-967-11	CERAMIC CHIP	0.0033uF	10%	50V
C112	1-164-315-11	CERAMIC CHIP	470PF	5%	50V
C113	1-162-967-11	CERAMIC CHIP	0.0033uF	10%	50V
C114	1-164-315-11	CERAMIC CHIP	470PF	5%	50V
C115	1-164-360-11	CERAMIC CHIP	0.1uF		16V
C116	1-128-995-21	ELECT CHIP	100uF	20%	10V
C122	1-107-826-11	CERAMIC CHIP	0.1uF	10%	16V
C123	1-107-826-11	CERAMIC CHIP	0.1uF	10%	16V
C124	1-162-959-11	CERAMIC CHIP	330PF	5%	50V
C125	1-164-360-11	CERAMIC CHIP	0.1uF		16V
C131	1-162-927-11	CERAMIC CHIP	100PF	5%	50V
C132	1-117-863-11	CERAMIC CHIP	0.47uF	10%	6.3V
C133	1-162-970-11	CERAMIC CHIP	0.01uF	10%	25V
C134	1-164-360-11	CERAMIC CHIP	0.1uF		16V
C141	1-107-826-11	CERAMIC CHIP	0.1uF	10%	16V
C142	1-162-965-11	CERAMIC CHIP	0.0015uF	10%	50V
C143	1-164-360-11	CERAMIC CHIP	0.1uF		16V
C151	1-128-995-21	ELECT CHIP	100uF	20%	10V
C161	1-164-360-11	CERAMIC CHIP	0.1uF		16V
C162	1-164-360-11	CERAMIC CHIP	0.1uF		16V
C163	1-164-360-11	CERAMIC CHIP	0.1uF		16V
C171	1-162-919-11	CERAMIC CHIP	22PF	5%	50V
C172	1-162-920-11	CERAMIC CHIP	27PF	5%	50V
C174	1-164-360-11	CERAMIC CHIP	0.1uF		16V
C181	1-164-360-11	CERAMIC CHIP	0.1uF		16V
C182	1-164-360-11	CERAMIC CHIP	0.1uF		16V
C183	1-124-778-00	ELECT CHIP	22uF	20%	6.3V
C184	1-124-778-00	ELECT CHIP	22uF	20%	6.3V
C185	1-164-315-11	CERAMIC CHIP	470PF	5%	50V
C186	1-164-315-11	CERAMIC CHIP	470PF	5%	50V
C194	1-164-360-11	CERAMIC CHIP	0.1uF		16V
C195	1-164-360-11	CERAMIC CHIP	0.1uF		16V
C196	1-164-360-11	CERAMIC CHIP	0.1uF		16V
C201	1-128-995-21	ELECT CHIP	100uF	20%	10V
C203	1-128-995-21	ELECT CHIP	100uF	20%	10V
C209	1-162-970-11	CERAMIC CHIP	0.01uF	10%	25V
C210	1-107-826-11	CERAMIC CHIP	0.1uF	10%	16V
C211	1-164-230-11	CERAMIC CHIP	220PF	5%	50V
C212	1-162-919-11	CERAMIC CHIP	22PF	5%	50V
C213	1-162-919-11	CERAMIC CHIP	22PF	5%	50V
C251	1-162-969-11	CERAMIC CHIP	0.0068uF	10%	25V
C252	1-164-360-11	CERAMIC CHIP	0.1uF		16V
C255	1-164-360-11	CERAMIC CHIP	0.1uF		16V
C257	1-164-360-11	CERAMIC CHIP	0.1uF		16V
C258	1-164-360-11	CERAMIC CHIP	0.1uF		16V
C259	1-164-360-11	CERAMIC CHIP	0.1uF		16V
C260	1-128-394-11	ELECT CHIP	220uF	20%	10V
C302	1-164-360-11	CERAMIC CHIP	0.1uF		16V
C303	1-164-360-11	CERAMIC CHIP	0.1uF		16V
C305	1-126-246-11	ELECT CHIP	220uF	20%	4V
C306	1-164-360-11	CERAMIC CHIP	0.1uF		16V
C307	1-164-360-11	CERAMIC CHIP	0.1uF		16V
C308	1-126-208-21	ELECT CHIP	47uF	20%	4V
C309	1-164-360-11	CERAMIC CHIP	0.1uF		16V
C310	1-164-360-11	CERAMIC CHIP	0.1uF		16V
C311	1-164-360-11	CERAMIC CHIP	0.1uF		16V
C312	1-164-360-11	CERAMIC CHIP	0.1uF		16V
C313	1-164-360-11	CERAMIC CHIP	0.1uF		16V
C314	1-126-208-21	ELECT CHIP	47uF	20%	4V
C315	1-107-826-11	CERAMIC CHIP	0.1uF	10%	16V
C316	1-162-966-11	CERAMIC CHIP	0.0022uF	10%	50V
C317	1-162-970-11	CERAMIC CHIP	0.01uF	10%	25V
C318	1-162-970-11	CERAMIC CHIP	0.01uF	10%	25V
C320	1-216-864-11	SHORT CHIP	0		
		< CONNECTOR >			
CN101	1-770-425-11	CONNECTOR, FFC/FPC 16P			
CN201	1-818-350-11	CONNECTOR (FFC) 27P			
		< FERRITE BEAD >			
FB301	1-500-445-21	FERRITE, EMI (SMD) (2012)			
		< IC >			
IC101	8-752-425-12	IC CXD3059AR			
IC251	6-705-808-01	IC BA5947FM			

CD | CDMP3 CONNECT | DRIVER

Ref. No.	Part No.	Description			Remark
IC301	6-705-365-01	IC TC94A34FG-002			
IC303	6-705-807-01	IC BH15FB1WG			
		< TRANSISTOR >			
Q10	6-550-363-01	TRANSISTOR	2SB1690KT146		
		< RESISTOR/FERRITE BEAD >			
R10	1-216-791-11	METAL CHIP	3.3	5%	1/10W
R11	1-216-864-11	SHORT CHIP	0		
R12	1-216-845-11	METAL CHIP	100K	5%	1/10W
R13	1-218-446-11	METAL CHIP	1	5%	1/10W
R111	1-216-821-11	METAL CHIP	1K	5%	1/10W
R112	1-216-835-11	METAL CHIP	15K	5%	1/10W
R113	1-216-821-11	METAL CHIP	1K	5%	1/10W
R114	1-216-835-11	METAL CHIP	15K	5%	1/10W
R121	1-216-835-11	METAL CHIP	15K	5%	1/10W
R131	1-216-857-11	METAL CHIP	1M	5%	1/10W
R132	1-216-833-11	METAL CHIP	10K	5%	1/10W
R133	1-216-848-11	METAL CHIP	180K	5%	1/10W
R141	1-216-829-11	METAL CHIP	4.7K	5%	1/10W
R142	1-216-821-11	METAL CHIP	1K	5%	1/10W
R143	1-216-827-11	METAL CHIP	3.3K	5%	1/10W
R151	1-216-864-11	SHORT CHIP	0		
R161	1-216-809-11	METAL CHIP	100	5%	1/10W
R162	1-216-841-11	METAL CHIP	47K	5%	1/10W
R163	1-216-809-11	METAL CHIP	100	5%	1/10W
R165	1-216-864-11	SHORT CHIP	0		
R171	1-216-817-11	METAL CHIP	470	5%	1/10W
R172	1-216-857-11	METAL CHIP	1M	5%	1/10W
R173	1-216-295-00	SHORT CHIP	0		
R181	1-216-809-11	METAL CHIP	100	5%	1/10W
R182	1-216-809-11	METAL CHIP	100	5%	1/10W
R191	1-216-864-11	SHORT CHIP	0		
R201	1-500-445-21	FERRITE, EMI (SMD) (2012)			
R203	1-216-864-11	SHORT CHIP	0		
R204	1-500-445-21	FERRITE, EMI (SMD) (2012)			
R205	1-216-864-11	SHORT CHIP	0		
R251	1-216-833-11	METAL CHIP	10K	5%	1/10W
R252	1-216-837-11	METAL CHIP	22K	5%	1/10W
R253	1-216-833-11	METAL CHIP	10K	5%	1/10W
R301	1-216-845-11	METAL CHIP	100K	5%	1/10W
R302	1-216-833-11	METAL CHIP	10K	5%	1/10W
R303	1-216-845-11	METAL CHIP	100K	5%	1/10W
R305	1-216-845-11	METAL CHIP	100K	5%	1/10W
R306	1-216-864-11	SHORT CHIP	0		
R307	1-216-833-11	METAL CHIP	10K	5%	1/10W
R313	1-216-813-11	METAL CHIP	220	5%	1/10W
R351	1-216-809-11	METAL CHIP	100	5%	1/10W
R352	1-216-809-11	METAL CHIP	100	5%	1/10W
R353	1-216-809-11	METAL CHIP	100	5%	1/10W
R354	1-216-809-11	METAL CHIP	100	5%	1/10W
R401	1-216-809-11	METAL CHIP	100	5%	1/10W
R402	1-216-809-11	METAL CHIP	100	5%	1/10W
R403	1-216-809-11	METAL CHIP	100	5%	1/10W
R404	1-216-809-11	METAL CHIP	100	5%	1/10W
R405	1-216-809-11	METAL CHIP	100	5%	1/10W
R406	1-216-809-11	METAL CHIP	100	5%	1/10W
R407	1-216-809-11	METAL CHIP	100	5%	1/10W
R408	1-216-809-11	METAL CHIP	100	5%	1/10W
R409	1-216-809-11	METAL CHIP	100	5%	1/10W
R410	1-216-809-11	METAL CHIP	100	5%	1/10W
R411	1-216-809-11	METAL CHIP	100	5%	1/10W
R412	1-216-809-11	METAL CHIP	100	5%	1/10W
R419	1-216-809-11	METAL CHIP	100	5%	1/10W
		< VIBRATOR >			
X171	1-767-408-21	VIBRATOR, CRYSTAL (16.9344MHz)			
**********					
		CDMP3 CONNECT BOARD			
		**********			
		< CAPACITOR >			
C871	1-162-927-11	CERAMIC CHIP	100PF	5%	50V
C872	1-162-970-11	CERAMIC CHIP	0.01uF	10%	25V
C873	1-162-927-11	CERAMIC CHIP	100PF	5%	50V
C874	1-164-315-11	CERAMIC CHIP	470PF	5%	50V
C875	1-164-156-11	CERAMIC CHIP	0.1uF		25V
C876	1-164-156-11	CERAMIC CHIP	0.1uF		25V
		< CONNECTOR >			
CN871	1-779-295-11	CONNECTOR, FFC (LIF (NON-ZIF)) 27P			
CN873	1-784-778-11	CONNECTOR, FFC 17P			
* CN874	1-564-725-11	PIN, CONNECTOR (SMALL TYPE) 9P			
		< SHORT >			
FB871	1-216-864-11	SHORT CHIP	0		
FB872	1-216-864-11	SHORT CHIP	0		
JR871	1-216-864-11	SHORT CHIP	0		
JR872	1-216-864-11	SHORT CHIP	0		
**********					
	1-687-135-12	DRIVER BOARD			
		**********			
		< CAPACITOR >			
C715	1-126-933-11	ELECT	100uF	20%	16V
C731	1-126-964-11	ELECT	10uF	20%	50V
C735	1-164-159-21	CERAMIC	0.1uF		50V
C736	1-164-159-21	CERAMIC	0.1uF		50V
C737	1-164-159-21	CERAMIC	0.1uF		50V
C741	1-162-306-11	CERAMIC	0.01uF	20%	16V
C751	1-162-306-11	CERAMIC	0.01uF	20%	16V
C752	1-164-159-21	CERAMIC	0.1uF		50V
		< CONNECTOR >			
CN701	1-785-338-11	PIN, CONNECTOR (LIGHT ANGLE) 12P			
CN702	1-784-766-11	CONNECTOR, FFC 5P			
* CN703	1-564-720-11	PIN, CONNECTOR (SMALL TYPE) 4P			
CN704	1-785-328-11	PIN, CONNECTOR (LIGHT ANGRE) 2P			
		< DIODE >			
D701	8-719-921-42	DIODE MTZJ-5.1A			
D711	8-719-109-69	DIODE RD3.6ESB2			

DRIVER **HEADPHONE** **MAIN**

Ref. No.	Part No.	Description			Remark
		< IC >			
IC701	8-759-598-69	IC BA6956AN			
IC712	8-759-598-69	IC BA6956AN			
		< TRANSISTOR >			
Q731	8-729-029-66	TRANSISTOR	DTC114ESA		
		< RESISTOR >			
R701	1-249-413-11	CARBON	470	5%	1/4W
R702	1-247-807-31	CARBON	100	5%	1/4W
R711	1-249-417-11	CARBON	1K	5%	1/4W
R712	1-249-425-11	CARBON	4.7K	5%	1/4W
R713	1-249-433-11	CARBON	22K	5%	1/4W
R721	1-249-425-11	CARBON	4.7K	5%	1/4W
R722	1-249-425-11	CARBON	4.7K	5%	1/4W
R723	1-249-425-11	CARBON	4.7K	5%	1/4W
R731	1-247-807-31	CARBON	100	5%	1/4W
R732	1-249-429-11	CARBON	10K	5%	1/4W
R733	1-249-417-11	CARBON	1K	5%	1/4W
R734	1-249-430-11	CARBON	12K	5%	1/4W
R735	1-247-807-31	CARBON	100	5%	1/4W
R751	1-249-425-11	CARBON	4.7K	5%	1/4W

****

HEADPHONE BOARD
****

		< CAPACITOR >			
C806	1-162-964-11	CERAMIC CHIP	0.001uF	10%	50V
C807	1-162-964-11	CERAMIC CHIP	0.001uF	10%	50V
C808	1-164-156-11	CERAMIC CHIP	0.1uF		25V
		< JACK >			
J801	1-793-829-11	JACK, HEADPHONE (PHONES)			

****

	A-4751-486-A	MAIN BOARD, COMPLETE (AEP, UK)			
	A-4751-495-A	MAIN BOARD, COMPLETE (E51, MX)			
	A-4752-928-A	MAIN BOARD, COMPLETE (CIS)			
		**********			
	7-685-872-09	SCREW +BVTT 3X8 (S)			
		< CAPACITOR >			
C101	1-126-960-11	ELECT	1uF	20%	50V
C102	1-126-960-11	ELECT	1uF	20%	50V
C103	1-126-956-11	ELECT	0.1uF	20%	50V
C104	1-126-956-11	ELECT	0.1uF	20%	50V
C105	1-164-230-11	CERAMIC CHIP	220PF	5%	50V
C106	1-131-679-31	FILM	0.01uF	5%	50V
C107	1-126-964-11	ELECT	10uF	20%	50V
C108	1-164-230-11	CERAMIC CHIP	220PF	5%	50V
C109	1-131-679-31	FILM	0.01uF	5%	50V
C110	1-126-964-11	ELECT	10uF	20%	50V
C111	1-126-960-11	ELECT	1uF	20%	50V
C112	1-126-960-11	ELECT	1uF	20%	50V
C113	1-126-960-11	ELECT	1uF	20%	50V
C114	1-126-960-11	ELECT	1uF	20%	50V
C115	1-131-679-31	FILM	0.01uF	5%	50V
C116	1-164-392-11	CERAMIC CHIP	390PF	5%	50V
C117	1-164-230-11	CERAMIC CHIP	220PF	5%	50V
C118	1-126-964-11	ELECT	10uF	20%	50V
C119	1-131-679-31	FILM	0.01uF	5%	50V
C120	1-164-392-11	CERAMIC CHIP	390PF	5%	50V
C121	1-164-230-11	CERAMIC CHIP	220PF	5%	50V
C122	1-126-964-11	ELECT	10uF	20%	50V
C123	1-126-965-11	ELECT	22uF	20%	50V
C124	1-162-953-11	CERAMIC CHIP	100PF	5%	50V
C125	1-162-953-11	CERAMIC CHIP	100PF	5%	50V
C126	1-165-112-11	CERAMIC CHIP	0.33uF		16V
C127	1-104-665-11	ELECT	100uF	20%	25V
C128	1-104-665-11	ELECT	100uF	20%	25V
C129	1-126-947-11	ELECT	47uF	20%	35V
C132	1-126-947-11	ELECT	47uF	20%	35V
C135	1-136-165-00	FILM	0.1uF	5%	50V
C136	1-136-165-00	FILM	0.1uF	5%	50V
C137	1-126-964-11	ELECT	10uF	20%	50V
C138	1-126-964-11	ELECT	10uF	20%	50V
C139	1-136-165-00	FILM	0.1uF	5%	50V
C140	1-136-165-00	FILM	0.1uF	5%	50V
C141	1-126-964-11	ELECT	10uF	20%	50V
C142	1-126-964-11	ELECT	10uF	20%	50V
C143	1-126-960-11	ELECT	1uF	20%	50V
C144	1-136-165-00	FILM	0.1uF	5%	50V
C145	1-126-964-11	ELECT	10uF	20%	50V
C146	1-136-165-00	FILM	0.1uF	5%	50V
C147	1-126-964-11	ELECT	10uF	20%	50V
C148	1-131-679-31	FILM	0.01uF	5%	50V
C149	1-131-679-31	FILM	0.01uF	5%	50V
C150	1-131-679-31	FILM	0.01uF	5%	50V
C151	1-131-679-31	FILM	0.01uF	5%	50V
C152	1-130-475-00	MYLAR	0.0022uF	5%	50V
C153	1-130-475-00	MYLAR	0.0022uF	5%	50V
C154	1-131-700-31	FILM	0.47uF	5%	50V
C157	1-126-960-11	ELECT	1uF	20%	50V
C159	1-126-960-11	ELECT	1uF	20%	50V
C160	1-126-960-11	ELECT	1uF	20%	50V
C161	1-162-971-11	CERAMIC CHIP	0.001uF	10%	50V (AEP, UK, CIS)
C163	1-162-971-11	CERAMIC CHIP	0.001uF	10%	50V (AEP, UK, CIS)
C165	1-126-960-11	ELECT	1uF	20%	50V
C166	1-126-960-11	ELECT	1uF	20%	50V
C167	1-126-960-11	ELECT	1uF	20%	50V
C169	1-126-960-11	ELECT	1uF	20%	50V
C171	1-164-362-11	CERAMIC CHIP	470PF	5%	50V
C172	1-164-362-11	CERAMIC CHIP	470PF	5%	50V
C175	1-109-953-11	ELECT	2.2uF	20%	50V
C176	1-126-964-11	ELECT	10uF	20%	50V
C177	1-162-945-11	CERAMIC CHIP	22PF	5%	50V
C178	1-126-947-11	ELECT	47uF	20%	35V
C179	1-162-949-11	CERAMIC CHIP	47PF	5%	50V
C181	1-162-949-11	CERAMIC CHIP	47PF	5%	50V
C183	1-162-945-11	CERAMIC CHIP	22PF	5%	50V
C184	1-126-947-11	ELECT	47uF	20%	35V
C185	1-126-964-11	ELECT	10uF	20%	50V

Ref. No.	Part No.	Description			Remark
C186	1-126-947-11	ELECT	47uF	20%	35V
C187	1-162-974-11	CERAMIC CHIP	0.01uF		50V
C188	1-126-965-11	ELECT	22uF	20%	50V
C189	1-126-965-11	ELECT	22uF	20%	50V
C190	1-162-974-11	CERAMIC CHIP	0.01uF		50V
C191	1-126-961-11	ELECT	2.2uF	20%	50V
C192	1-126-961-11	ELECT	2.2uF	20%	50V
C193	1-162-966-11	CERAMIC CHIP	0.0022uF	10%	50V
C206	1-162-966-11	CERAMIC CHIP	0.0022uF	10%	50V
C208	1-164-230-11	CERAMIC CHIP	220PF	5%	50V (AEP, UK, CIS)
C209	1-164-230-11	CERAMIC CHIP	220PF	5%	50V (AEP, UK, CIS)
C211	1-109-953-11	ELECT	2.2uF	20%	50V
C212	1-126-964-11	ELECT	10uF	20%	50V
C213	1-126-964-11	ELECT	10uF	20%	50V
C214	1-126-926-11	ELECT	1000uF	20%	10V
C216	1-164-156-11	CERAMIC CHIP	0.1uF		25V
C217	1-164-156-11	CERAMIC CHIP	0.1uF		25V
C222	1-164-156-11	CERAMIC CHIP	0.1uF		25V
C228	1-164-156-11	CERAMIC CHIP	0.1uF		25V
C229	1-126-963-11	ELECT	4.7uF	20%	50V
C230	1-126-947-11	ELECT	47uF	20%	35V
C235	1-164-156-11	CERAMIC CHIP	0.1uF		25V
C241	1-162-964-11	CERAMIC CHIP	0.001uF	10%	50V
C242	1-130-479-00	MYLAR	0.0047uF	5%	50V
C243	1-130-479-00	MYLAR	0.0047uF	5%	50V
C244	1-131-681-31	FILM	0.015uF	5%	50V
C246	1-136-157-00	FILM	0.022uF	5%	50V
C248	1-162-964-11	CERAMIC CHIP	0.001uF	10%	50V
C249	1-126-964-11	ELECT	10uF	20%	50V
C250	1-126-947-11	ELECT	47uF	20%	35V
C251	1-126-947-11	ELECT	47uF	20%	35V
C252	1-126-933-11	ELECT	100uF	20%	16V
C253	1-126-956-11	ELECT	0.1uF	20%	50V
C258	1-126-959-11	ELECT	0.47uF	20%	50V
C259	1-126-957-11	ELECT	0.22uF	20%	50V
C264	1-162-971-11	CERAMIC CHIP	0.001uF	10%	50V
C265	1-162-971-11	CERAMIC CHIP	0.001uF	10%	50V
C266	1-162-971-11	CERAMIC CHIP	0.001uF	10%	50V
C267	1-162-971-11	CERAMIC CHIP	0.001uF	10%	50V
C270	1-126-964-11	ELECT	10uF	20%	50V
C271	1-162-971-11	CERAMIC CHIP	0.001uF	10%	50V (AEP, UK, CIS)
C272	1-162-971-11	CERAMIC CHIP	0.001uF	10%	50V (AEP, UK, CIS)
C274	1-162-949-11	CERAMIC CHIP	47PF	5%	50V
C275	1-162-949-11	CERAMIC CHIP	47PF	5%	50V
C276	1-164-362-11	CERAMIC CHIP	470PF	5%	50V (AEP, UK, CIS)
C277	1-164-362-11	CERAMIC CHIP	470PF	5%	50V (AEP, UK, CIS)
C278	1-164-362-11	CERAMIC CHIP	470PF	5%	50V (AEP, UK, CIS)
C279	1-164-362-11	CERAMIC CHIP	470PF	5%	50V (AEP, UK, CIS)
C280	1-164-362-11	CERAMIC CHIP	470PF	5%	50V (AEP, UK, CIS)
C281	1-164-362-11	CERAMIC CHIP	470PF	5%	50V (AEP, UK, CIS)

Ref. No.	Part No.	Description			Remark
C288	1-162-971-11	CERAMIC CHIP	0.001uF	10%	50V (AEP, UK, CIS)
C289	1-162-971-11	CERAMIC CHIP	0.001uF	10%	50V (AEP, UK, CIS)
C290	1-162-971-11	CERAMIC CHIP	0.001uF	10%	50V (AEP, UK, CIS)
C301	1-136-165-00	FILM	0.1uF	5%	50V
C302	1-136-165-00	FILM	0.1uF	5%	50V
C303	1-136-165-00	FILM	0.1uF	5%	50V
C304	1-136-165-00	FILM	0.1uF	5%	50V
C305	1-136-165-00	FILM	0.1uF	5%	50V
C306	1-136-165-00	FILM	0.1uF	5%	50V
C308	1-126-965-11	ELECT	22uF	20%	50V
C309	1-126-965-11	ELECT	22uF	20%	50V
C310	1-126-936-11	ELECT	3300uF	20%	16V
C311	1-126-964-11	ELECT	10uF	20%	50V
C312	1-126-964-11	ELECT	10uF	20%	50V
C313	1-126-943-11	ELECT	2200uF	20%	25V
C315	1-126-933-11	ELECT	100uF	20%	16V
C316	1-126-943-11	ELECT	2200uF	20%	25V
C318	1-126-933-11	ELECT	100uF	20%	16V
C321	1-126-961-11	ELECT	2.2uF	20%	50V
C342	1-164-156-11	CERAMIC CHIP	0.1uF		25V
C351	1-164-357-11	CERAMIC CHIP	0.001uF	5%	50V
C352	1-126-965-11	ELECT	22uF	20%	50V
C353	1-126-961-11	ELECT	2.2uF	20%	50V
C354	1-164-156-11	CERAMIC CHIP	0.1uF		25V
C371	1-164-362-11	CERAMIC CHIP	470PF	5%	50V
C372	1-162-953-11	CERAMIC CHIP	100PF	5%	50V
C373	1-162-953-11	CERAMIC CHIP	100PF	5%	50V
C374	1-126-947-11	ELECT	47uF	20%	35V
C375	1-164-156-11	CERAMIC CHIP	0.1uF		25V
C376	1-126-961-11	ELECT	2.2uF	20%	50V
		< CONNECTOR >			
CN101	1-568-830-11	CONNECTOR, FFC 11P (CIS, E51, MX)			
CN101	1-784-776-11	CONNECTOR, FFC 15P (AEP, UK)			
* CN103	1-564-710-11	PIN, CONNECTOR (SMALL TYPE) 8P			
* CN112	1-564-705-11	PIN, CONNECTOR (SMALL TYPE) 3P			
CN302	1-568-844-11	CONNECTOR, FFC 29P (CIS, E51, MX)			
CN302	1-784-792-11	CONNECTOR, FFC 31P (AEP, UK)			
CN307	1-778-982-21	CONNECTOR, BOARD TO BOARD 13P			
CN308	1-564-506-11	PLUG, CONNECTOR 3P			
CN309	1-564-707-11	PIN, CONNECTOR (SMALL TYPE) 5P			
		< DIODE >			
D201	8-719-988-61	DIODE 1SS355TE-17			
D202	8-719-083-63	DIODE UDZSTE-1713B			
D206	8-719-988-61	DIODE 1SS355TE-17			
D207	8-719-988-61	DIODE 1SS355TE-17			
D211	8-719-988-61	DIODE 1SS355TE-17			
D212	8-719-988-61	DIODE 1SS355TE-17			
D213	8-719-988-61	DIODE 1SS355TE-17			
D214	8-719-988-61	DIODE 1SS355TE-17			
D215	8-719-988-61	DIODE 1SS355TE-17			
D301	6-500-522-21	DIODE 10EDB40-TB3			
D302	6-500-522-21	DIODE 10EDB40-TB3			
D303	6-500-522-21	DIODE 10EDB40-TB3			

MAIN

Ref. No.	Part No.	Description	Remark
D304	6-500-522-21	DIODE 10EDB40-TB3	
D305	6-500-522-21	DIODE 10EDB40-TB3	
D306	6-500-522-21	DIODE 10EDB40-TB3	
D307	6-500-522-21	DIODE 10EDB40-TB3	
D308	6-500-522-21	DIODE 10EDB40-TB3	
D309	6-500-522-21	DIODE 10EDB40-TB3	
D310	6-500-522-21	DIODE 10EDB40-TB3	
D311	6-500-522-21	DIODE 10EDB40-TB3	
D312	6-500-522-21	DIODE 10EDB40-TB3	
D313	8-719-085-36	DIODE 11EQS04-TB5	
D316	8-719-988-61	DIODE 1SS355TE-17	
D321	8-719-988-61	DIODE 1SS355TE-17	
D322	8-719-988-61	DIODE 1SS355TE-17	
D324	6-500-522-21	DIODE 10EDB40-TB3	
D325	6-500-522-21	DIODE 10EDB40-TB3	
D326	6-500-522-21	DIODE 10EDB40-TB3	
		< EARTH TERMINAL >	
EP101	1-537-771-21	TERMINAL BOARD, GROUND	
EP301	1-537-771-21	TERMINAL BOARD, GROUND	
		< FERRITE BEAD/SHORT >	
FB201	1-216-864-11	SHORT CHIP 0	
FB202	1-216-864-11	SHORT CHIP 0	
FB203	1-216-864-11	SHORT CHIP 0	
FB204	1-216-864-11	SHORT CHIP 0	
FB205	1-216-864-11	SHORT CHIP 0 (E51, MX)	
FB205	1-543-958-22	BEAD, FERRITE (CHIP) (1608) (AEP, UK, CIS)	
		< IC >	
IC101	6-705-852-01	IC BD3401KS2	
IC102	8-759-710-97	IC NJM4565M-D	
IC201	8-759-508-69	IC BA3126N	
IC301	6-702-771-01	IC TA78033LS	
IC302	6-702-771-01	IC TA78033LS	
IC303	8-759-701-59	IC NJM78M09FA	
IC304	8-759-701-59	IC NJM78M09FA	
IC371	6-704-046-01	IC BU2099FV	
		< JACK >	
JK101	1-793-987-11	JACK, PIN 2P (VIDEO/MD IN)	
		< COIL >	
L101	1-437-220-11	TRANSFORMER, BIAS OSCILLATION	
		< TRANSISTOR >	
Q101	8-729-120-28	TRANSISTOR 2SC1623-L5L6	
Q102	6-550-580-01	TRANSISTOR 2SA1235TP-1F	
Q103	6-550-889-01	TRANSISTOR 2SC5938-T112-1B	
Q104	6-550-889-01	TRANSISTOR 2SC5938-T112-1B	
Q105	8-729-120-28	TRANSISTOR 2SC1623-L5L6	
Q106	8-729-120-28	TRANSISTOR 2SC1623-L5L6	
Q107	8-729-120-28	TRANSISTOR 2SC1623-L5L6	
Q304	8-729-120-28	TRANSISTOR 2SC1623-L5L6	
Q305	6-550-580-01	TRANSISTOR 2SA1235TP-1F	
Q306	6-550-889-01	TRANSISTOR 2SC5938-T112-1B	

Ref. No.	Part No.	Description	Remark
Q307	6-550-889-01	TRANSISTOR 2SC5938-T112-1B	
Q308	6-550-580-01	TRANSISTOR 2SA1235TP-1F	
Q309	8-729-120-28	TRANSISTOR 2SC1623-L5L6	
Q310	8-729-142-46	TRANSISTOR 2SC2001-LK	
Q311	8-729-142-46	TRANSISTOR 2SC2001-LK	
Q312	8-729-041-19	TRANSISTOR 2SA953-T-K	
Q313	8-729-120-28	TRANSISTOR 2SC1623-L5L6	
Q314	6-550-580-01	TRANSISTOR 2SA1235TP-1F	
Q315	8-729-120-28	TRANSISTOR 2SC1623-L5L6	
Q321	8-729-142-46	TRANSISTOR 2SC2001-LK	
Q322	6-550-580-01	TRANSISTOR 2SA1235TP-1F	
Q323	8-729-120-28	TRANSISTOR 2SC1623-L5L6	
Q324	8-729-140-04	TRANSISTOR 2SB1116A-L	
Q327	8-729-120-28	TRANSISTOR 2SC1623-L5L6	
Q351	8-729-120-28	TRANSISTOR 2SC1623-L5L6	
Q352	8-729-120-28	TRANSISTOR 2SC1623-L5L6	
Q361	6-550-580-01	TRANSISTOR 2SA1235TP-1F	
Q362	8-729-120-28	TRANSISTOR 2SC1623-L5L6	
		< RESISTOR >	
R101	1-216-833-11	METAL CHIP 10K 5% 1/10W	
R102	1-216-833-11	METAL CHIP 10K 5% 1/10W	
R103	1-216-851-11	METAL CHIP 330K 5% 1/10W	
R104	1-216-835-11	METAL CHIP 15K 5% 1/10W	
R105	1-216-816-11	METAL CHIP 390 5% 1/10W	
R106	1-216-851-11	METAL CHIP 330K 5% 1/10W	
R107	1-216-835-11	METAL CHIP 15K 5% 1/10W	
R108	1-216-816-11	METAL CHIP 390 5% 1/10W	
R109	1-216-853-11	METAL CHIP 470K 5% 1/10W	
R110	1-216-851-11	METAL CHIP 330K 5% 1/10W	
R111	1-216-844-11	METAL CHIP 82K 5% 1/10W	
R112	1-216-853-11	METAL CHIP 470K 5% 1/10W	
R113	1-216-851-11	METAL CHIP 330K 5% 1/10W	
R114	1-216-844-11	METAL CHIP 82K 5% 1/10W	
R115	1-216-857-11	METAL CHIP 1M 5% 1/10W	
R116	1-216-809-11	METAL CHIP 100 5% 1/10W	
R117	1-216-809-11	METAL CHIP 100 5% 1/10W	
R119	1-216-841-11	METAL CHIP 47K 5% 1/10W	
R120	1-216-857-11	METAL CHIP 1M 5% 1/10W	
R121	1-216-841-11	METAL CHIP 47K 5% 1/10W	
R122	1-216-849-11	METAL CHIP 220K 5% 1/10W	
R127	1-216-829-11	METAL CHIP 4.7K 5% 1/10W	
R128	1-216-835-11	METAL CHIP 15K 5% 1/10W	
R129	1-216-841-11	METAL CHIP 47K 5% 1/10W	
R130	1-216-849-11	METAL CHIP 220K 5% 1/10W	
R131	1-216-835-11	METAL CHIP 15K 5% 1/10W	
R132	1-216-829-11	METAL CHIP 4.7K 5% 1/10W	
R133	1-216-829-11	METAL CHIP 4.7K 5% 1/10W	
R134	1-216-829-11	METAL CHIP 4.7K 5% 1/10W	
R135	1-216-829-11	METAL CHIP 4.7K 5% 1/10W	
R136	1-216-829-11	METAL CHIP 4.7K 5% 1/10W	
R137	1-216-833-11	METAL CHIP 10K 5% 1/10W	
R138	1-216-821-11	METAL CHIP 1K 5% 1/10W	
R139	1-216-864-11	SHORT CHIP 0	
R143	1-216-821-11	METAL CHIP 1K 5% 1/10W	
R144	1-216-821-11	METAL CHIP 1K 5% 1/10W	
R145	1-216-845-11	METAL CHIP 100K 5% 1/10W	
R146	1-216-845-11	METAL CHIP 100K 5% 1/10W	

MAIN

Ref. No.	Part No.	Description			Remark
R151	1-216-829-11	METAL CHIP	4.7K	5%	1/10W
R152	1-216-833-11	METAL CHIP	10K	5%	1/10W
R153	1-216-833-11	METAL CHIP	10K	5%	1/10W
R154	1-216-833-11	METAL CHIP	10K	5%	1/10W
R155	1-216-829-11	METAL CHIP	4.7K	5%	1/10W
R156	1-216-853-11	METAL CHIP	470K	5%	1/10W
R157	1-216-841-11	METAL CHIP	47K	5%	1/10W
R158	1-216-825-11	METAL CHIP	2.2K	5%	1/10W
R159	1-216-833-11	METAL CHIP	10K	5%	1/10W
R160	1-216-821-11	METAL CHIP	1K	5%	1/10W
R161	1-216-833-11	METAL CHIP	10K	5%	1/10W
R162	1-216-825-11	METAL CHIP	2.2K	5%	1/10W
R163	1-216-833-11	METAL CHIP	10K	5%	1/10W
R164	1-216-821-11	METAL CHIP	1K	5%	1/10W
R165	1-216-833-11	METAL CHIP	10K	5%	1/10W
R166	1-216-833-11	METAL CHIP	10K	5%	1/10W
R167	1-216-837-11	METAL CHIP	22K	5%	1/10W
R168	1-216-845-11	METAL CHIP	100K	5%	1/10W
R169	1-216-845-11	METAL CHIP	100K	5%	1/10W
R170	1-216-833-11	METAL CHIP	10K	5%	1/10W
R171	1-216-837-11	METAL CHIP	22K	5%	1/10W
R172	1-216-809-11	METAL CHIP	100	5%	1/10W
R173	1-216-833-11	METAL CHIP	10K	5%	1/10W
R174	1-216-833-11	METAL CHIP	10K	5%	1/10W
R175	1-216-833-11	METAL CHIP	10K	5%	1/10W
R176	1-216-849-11	METAL CHIP	220K	5%	1/10W
R177	1-216-849-11	METAL CHIP	220K	5%	1/10W
R194	1-216-829-11	METAL CHIP	4.7K	5%	1/10W
R195	1-216-829-11	METAL CHIP	4.7K	5%	1/10W
R197	1-216-825-11	METAL CHIP	2.2K	5%	1/10W
R198	1-216-825-11	METAL CHIP	2.2K	5%	1/10W
R201	1-216-829-11	METAL CHIP	4.7K	5%	1/10W
R202	1-216-833-11	METAL CHIP	10K	5%	1/10W
R203	1-216-833-11	METAL CHIP	10K	5%	1/10W
R204	1-216-833-11	METAL CHIP	10K	5%	1/10W
R205	1-216-829-11	METAL CHIP	4.7K	5%	1/10W
R206	1-216-841-11	METAL CHIP	47K	5%	1/10W
R207	1-216-825-11	METAL CHIP	2.2K	5%	1/10W
R208	1-216-821-11	METAL CHIP	1K	5%	1/10W
R209	1-216-833-11	METAL CHIP	10K	5%	1/10W
R210	1-216-825-11	METAL CHIP	2.2K	5%	1/10W
R211	1-216-821-11	METAL CHIP	1K	5%	1/10W
R212	1-216-833-11	METAL CHIP	10K	5%	1/10W
R213	1-216-821-11	METAL CHIP	1K	5%	1/10W
R214	1-216-821-11	METAL CHIP	1K	5%	1/10W
R216	1-216-806-11	METAL CHIP	56	5%	1/10W
R217	1-216-806-11	METAL CHIP	56	5%	1/10W
⚠R218	1-215-891-11	METAL OXIDE	680	5%	2W F (AEP, UK, CIS)
⚠R218	1-215-916-00	METAL OXIDE	680	5%	3W F (E51, MX)
⚠R219	1-215-891-11	METAL OXIDE	680	5%	2W F (AEP, UK, CIS)
⚠R219	1-215-916-00	METAL OXIDE	680	5%	3W F (E51, MX)
R220	1-216-837-11	METAL CHIP	22K	5%	1/10W
R221	1-216-837-11	METAL CHIP	22K	5%	1/10W
R222	1-216-830-11	METAL CHIP	5.6K	5%	1/10W
R223	1-216-864-11	SHORT CHIP	0		
R225	1-216-829-11	METAL CHIP	4.7K	5%	1/10W
R226	1-216-841-11	METAL CHIP	47K	5%	1/10W
R227	1-216-821-11	METAL CHIP	1K	5%	1/10W
R228	1-216-821-11	METAL CHIP	1K	5%	1/10W
R229	1-216-829-11	METAL CHIP	4.7K	5%	1/10W
R230	1-216-829-11	METAL CHIP	4.7K	5%	1/10W
R231	1-216-825-11	METAL CHIP	2.2K	5%	1/10W
R232	1-216-833-11	METAL CHIP	10K	5%	1/10W
R235	1-216-793-11	METAL CHIP	4.7	5%	1/10W
R241	1-216-797-11	METAL CHIP	10	5%	1/10W
R242	1-216-837-11	METAL CHIP	22K	5%	1/10W
R243	1-216-833-11	METAL CHIP	10K	5%	1/10W
R244	1-216-833-11	METAL CHIP	10K	5%	1/10W
R245	1-216-829-11	METAL CHIP	4.7K	5%	1/10W
R246	1-216-809-11	METAL CHIP	100	5%	1/10W
R247	1-216-833-11	METAL CHIP	10K	5%	1/10W
R248	1-216-833-11	METAL CHIP	10K	5%	1/10W
R249	1-216-841-11	METAL CHIP	47K	5%	1/10W
R250	1-216-833-11	METAL CHIP	10K	5%	1/10W
R251	1-216-833-11	METAL CHIP	10K	5%	1/10W
R252	1-216-811-11	METAL CHIP	150	5%	1/10W
R253	1-216-809-11	METAL CHIP	100	5%	1/10W
R254	1-216-809-11	METAL CHIP	100	5%	1/10W
R262	1-216-827-11	METAL CHIP	3.3K	5%	1/10W
R263	1-216-857-11	METAL CHIP	1M	5%	1/10W
R264	1-216-821-11	METAL CHIP	1K	5%	1/10W
R265	1-216-833-11	METAL CHIP	10K	5%	1/10W
R266	1-216-845-11	METAL CHIP	100K	5%	1/10W
R272	1-216-853-11	METAL CHIP	470K	5%	1/10W
R273	1-216-864-11	SHORT CHIP	0		
R274	1-216-864-11	SHORT CHIP	0		
R275	1-216-864-11	SHORT CHIP	0		
R281	1-216-825-11	METAL CHIP	2.2K	5%	1/10W
R282	1-216-825-11	METAL CHIP	2.2K	5%	1/10W
R283	1-216-825-11	METAL CHIP	2.2K	5%	1/10W
R284	1-216-825-11	METAL CHIP	2.2K	5%	1/10W
R306	1-216-833-11	METAL CHIP	10K	5%	1/10W
R307	1-216-833-11	METAL CHIP	10K	5%	1/10W
R308	1-216-825-11	METAL CHIP	2.2K	5%	1/10W
R310	1-216-833-11	METAL CHIP	10K	5%	1/10W
R311	1-216-829-11	METAL CHIP	4.7K	5%	1/10W
R312	1-216-837-11	METAL CHIP	22K	5%	1/10W
R313	1-216-829-11	METAL CHIP	4.7K	5%	1/10W
R321	1-216-829-11	METAL CHIP	4.7K	5%	1/10W
R322	1-216-837-11	METAL CHIP	22K	5%	1/10W
R323	1-216-829-11	METAL CHIP	4.7K	5%	1/10W
R324	1-216-833-11	METAL CHIP	10K	5%	1/10W
R325	1-216-829-11	METAL CHIP	4.7K	5%	1/10W
R341	1-216-833-11	METAL CHIP	10K	5%	1/10W
R342	1-216-821-11	METAL CHIP	1K	5%	1/10W
R343	1-216-837-11	METAL CHIP	22K	5%	1/10W
R344	1-216-837-11	METAL CHIP	22K	5%	1/10W
R345	1-216-833-11	METAL CHIP	10K	5%	1/10W
R346	1-216-821-11	METAL CHIP	1K	5%	1/10W
R347	1-216-837-11	METAL CHIP	22K	5%	1/10W
R348	1-216-837-11	METAL CHIP	22K	5%	1/10W
R351	1-216-835-11	METAL CHIP	15K	5%	1/10W

The components identified by mark ⚠ or dotted line with mark ⚠ are critical for safety.
Replace only with part number specified.

MAIN | **MOTOR (LD)** | **MOTOR (TB)** | **PANEL**

Ref. No.	Part No.	Description			Remark
R352	1-216-845-11	METAL CHIP	100K	5%	1/10W
R353	1-216-841-11	METAL CHIP	47K	5%	1/10W
R354	1-216-829-11	METAL CHIP	4.7K	5%	1/10W
R356	1-216-817-11	METAL CHIP	470	5%	1/10W
R357	1-216-825-11	METAL CHIP	2.2K	5%	1/10W
R358	1-216-809-11	METAL CHIP	100	5%	1/10W
R361	1-216-833-11	METAL CHIP	10K	5%	1/10W
R362	1-216-825-11	METAL CHIP	2.2K	5%	1/10W
R363	1-216-829-11	METAL CHIP	4.7K	5%	1/10W
R364	1-216-829-11	METAL CHIP	4.7K	5%	1/10W
R371	1-216-809-11	METAL CHIP	100	5%	1/10W
R372	1-216-809-11	METAL CHIP	100	5%	1/10W
R373	1-216-809-11	METAL CHIP	100	5%	1/10W
R374	1-216-833-11	METAL CHIP	10K	5%	1/10W
R375	1-216-833-11	METAL CHIP	10K	5%	1/10W
R376	1-216-833-11	METAL CHIP	10K	5%	1/10W
R377	1-216-833-11	METAL CHIP	10K	5%	1/10W
R378	1-216-833-11	METAL CHIP	10K	5%	1/10W
R379	1-216-833-11	METAL CHIP	10K	5%	1/10W
R380	1-216-833-11	METAL CHIP	10K	5%	1/10W
R381	1-216-833-11	METAL CHIP	10K	5%	1/10W
R382	1-216-833-11	METAL CHIP	10K	5%	1/10W
R383	1-216-833-11	METAL CHIP	10K	5%	1/10W
R384	1-216-833-11	METAL CHIP	10K	5%	1/10W
R385	1-216-829-11	METAL CHIP	4.7K	5%	1/10W
R386	1-216-837-11	METAL CHIP	22K	5%	1/10W
R387	1-216-829-11	METAL CHIP	4.7K	5%	1/10W
R388	1-216-837-11	METAL CHIP	22K	5%	1/10W
R389	1-216-829-11	METAL CHIP	4.7K	5%	1/10W
R390	1-216-837-11	METAL CHIP	22K	5%	1/10W
R391	1-216-833-11	METAL CHIP	10K	5%	1/10W
R392	1-216-821-11	METAL CHIP	1K	5%	1/10W
R393	1-216-833-11	METAL CHIP	10K	5%	1/10W
R394	1-216-821-11	METAL CHIP	1K	5%	1/10W
R395	1-216-837-11	METAL CHIP	22K	5%	1/10W

****

	1-687-133-12	MOTOR (LD) BOARD
		**********

****

	1-687-134-12	MOTOR (TB) BOARD
		**********
		< CONNECTOR >
CN742	1-784-727-11	CONNECTOR, FFC 5P

****

	A-4751-484-A	PANEL BOARD, COMPLETE (AEP, UK)
	A-4751-493-A	PANEL BOARD, COMPLETE (E51, MX)
	A-4751-564-A	PANEL BOARD, COMPLETE (CIS)
		**********
		< CAPACITOR >

Ref. No.	Part No.	Description			Remark
C601	1-162-919-11	CERAMIC CHIP	22PF	5%	50V
C602	1-162-919-11	CERAMIC CHIP	22PF	5%	50V
C603	1-162-919-11	CERAMIC CHIP	22PF	5%	50V
C604	1-164-156-11	CERAMIC CHIP	0.1uF		25V
C605	1-126-963-11	ELECT	4.7uF	20%	50V
C606	1-115-156-11	CERAMIC CHIP	1uF		10V
C607	1-162-964-11	CERAMIC CHIP	0.001uF	10%	50V
C608	1-162-970-11	CERAMIC CHIP	0.01uF	10%	25V
C609	1-115-156-11	CERAMIC CHIP	1uF		10V
C610	1-126-916-11	ELECT	1000uF	20%	6.3V
C611	1-164-156-11	CERAMIC CHIP	0.1uF		25V
C612	1-126-964-11	ELECT	10uF	20%	50V
C613	1-164-156-11	CERAMIC CHIP	0.1uF		25V
C614	1-164-156-11	CERAMIC CHIP	0.1uF		25V
C615	1-126-961-11	ELECT	2.2uF	20%	50V
C617	1-162-964-11	CERAMIC CHIP	0.001uF	10%	50V
C618	1-162-964-11	CERAMIC CHIP	0.001uF	10%	50V
C619	1-126-947-11	ELECT	47uF	20%	35V
C620	1-126-947-11	ELECT	47uF	20%	35V
C621	1-162-995-11	CERAMIC CHIP	0.022uF		50V
C622	1-126-963-11	ELECT	4.7uF	20%	50V
C623	1-126-963-11	ELECT	4.7uF	20%	50V
C624	1-162-918-11	CERAMIC CHIP	18PF	5%	50V
C625	1-162-919-11	CERAMIC CHIP	22PF	5%	50V
C626	1-164-156-11	CERAMIC CHIP	0.1uF		25V
C628	1-162-927-11	CERAMIC CHIP	100PF	5%	50V
C629	1-162-927-11	CERAMIC CHIP	100PF	5%	50V
C630	1-162-927-11	CERAMIC CHIP	100PF	5%	50V
C631	1-162-927-11	CERAMIC CHIP	100PF	5%	50V
C632	1-162-927-11	CERAMIC CHIP	100PF	5%	50V
C633	1-162-927-11	CERAMIC CHIP	100PF	5%	50V
C634	1-162-927-11	CERAMIC CHIP	100PF	5%	50V
C635	1-162-927-11	CERAMIC CHIP	100PF	5%	50V
C636	1-162-927-11	CERAMIC CHIP	100PF	5%	50V
C637	1-162-927-11	CERAMIC CHIP	100PF	5%	50V
C638	1-162-927-11	CERAMIC CHIP	100PF	5%	50V
C639	1-162-927-11	CERAMIC CHIP	100PF	5%	50V
C640	1-162-927-11	CERAMIC CHIP	100PF	5%	50V
C641	1-164-156-11	CERAMIC CHIP	0.1uF		25V
C642	1-164-156-11	CERAMIC CHIP	0.1uF		25V
C643	1-164-156-11	CERAMIC CHIP	0.1uF		25V
C644	1-126-964-11	ELECT	10uF	20%	50V
C646	1-104-662-91	ELECT	22uF	20%	25V
C648	1-104-662-91	ELECT	22uF	20%	25V
C649	1-164-156-11	CERAMIC CHIP	0.1uF		25V
C650	1-162-964-11	CERAMIC CHIP	0.001uF	10%	50V
C651	1-162-964-11	CERAMIC CHIP	0.001uF	10%	50V
C653	1-162-959-11	CERAMIC CHIP	330PF	5%	50V
C656	1-162-927-11	CERAMIC CHIP	100PF	5%	50V
		< CONNECTOR >			
CN601	1-568-844-11	CONNECTOR, FFC 29P (CIS, E51, MX)			
CN601	1-784-792-11	CONNECTOR, FFC 31P (AEP, UK)			
CN602	1-784-735-11	CONNECTOR, FFC 13P			
CN603	1-784-778-11	CONNECTOR, FFC 17P			
		< DIODE >			
D603	8-719-988-61	DIODE 1SS355TE-17			
D604	8-719-988-61	DIODE 1SS355TE-17			
D605	8-719-988-61	DIODE 1SS355TE-17			
* D606	6-500-486-01	DIODE PTZ-TE25-11B (E51, MX)			
D607	8-719-988-61	DIODE 1SS355TE-17			

PANEL

Ref. No.	Part No.	Description	Remark
D608	8-719-988-61	DIODE 1SS355TE-17	
D609	8-719-988-61	DIODE 1SS355TE-17	
D610	8-719-056-78	DIODE UDZ-TE-17-4.3B	
D611	8-719-988-61	DIODE 1SS355TE-17	
D613	8-719-988-61	DIODE 1SS355TE-17	
D614	8-719-988-61	DIODE 1SS355TE-17	
D615	8-719-988-61	DIODE 1SS355TE-17	
D616	8-719-988-61	DIODE 1SS355TE-17	
D620	8-719-988-61	DIODE 1SS355TE-17 (EXCEPT CIS)	
D621	8-719-988-61	DIODE 1SS355TE-17	
D622	8-719-988-61	DIODE 1SS355TE-17 (AEP, UK, CIS)	
D623	8-719-988-61	DIODE 1SS355TE-17	
D624	8-719-988-61	DIODE 1SS355TE-17	
D626	8-719-988-61	DIODE 1SS355TE-17	
D628	8-719-988-61	DIODE 1SS355TE-17	
D630	8-719-988-61	DIODE 1SS355TE-17	
D631	8-719-978-33	DIODE DTZ-TT11-6.8B	
D632	8-719-083-57	DIODE UDZSTE-173.6B	
D633	8-719-988-61	DIODE 1SS355TE-17	
		< FLUORESCENT INDICATOR TUBE >	
FL601	1-518-977-11	INDICATOR TUBE, FLUORESCENT	
		< IC >	
IC601	6-804-440-01	IC LC876996A-53H2-E	
IC602	6-704-046-01	IC BU2099FV	
IC603	6-704-045-01	IC MM1574ANLE	
IC604	8-759-533-04	IC M62703ML-E1	
IC610	6-600-174-01	IC RPM7240-H4	
		< SHORT >	
JR601	1-216-296-11	SHORT CHIP 0	
JR602	1-216-864-11	SHORT CHIP 0	
JR603	1-216-864-11	SHORT CHIP 0	
JR607	1-216-864-11	SHORT CHIP 0	
JR608	1-216-864-11	SHORT CHIP 0	
JR609	1-216-864-11	SHORT CHIP 0	
JR610	1-216-296-11	SHORT CHIP 0	
JR611	1-216-864-11	SHORT CHIP 0 (CIS, E51, MX)	
JR612	1-216-864-11	SHORT CHIP 0 (CIS, E51, MX)	
JR614	1-216-864-11	SHORT CHIP 0	
JR615	1-216-864-11	SHORT CHIP 0	
JR617	1-216-864-11	SHORT CHIP 0	
JR621	1-216-864-11	SHORT CHIP 0	
JR622	1-216-864-11	SHORT CHIP 0	
JR624	1-216-864-11	SHORT CHIP 0	
JR626	1-216-864-11	SHORT CHIP 0	
JR627	1-216-864-11	SHORT CHIP 0	
JR628	1-216-864-11	SHORT CHIP 0	
JR629	1-216-864-11	SHORT CHIP 0	
		< LED >	
LED601	8-719-063-93	LED SLR325VC-N-T32 (I/⏻)	
LED602	6-500-810-01	LED SELU5923C-STP15 (i-BASS)	
		< TRANSISTOR >	
Q601	8-729-116-57	TRANSISTOR 2SB1068-K	
Q602	8-729-140-04	TRANSISTOR 2SB1116A-L	

Ref. No.	Part No.	Description	Remark
Q603	8-729-140-04	TRANSISTOR 2SB1116A-L	
Q604	8-729-119-76	TRANSISTOR 2SA1175-HFE	
Q605	8-729-120-28	TRANSISTOR 2SC1623-L5L6	
Q609	8-729-027-55	TRANSISTOR DTC143EKA-T146	
Q616	8-729-027-55	TRANSISTOR DTC143EKA-T146	
		< RESISTOR >	
R601	1-216-829-11	METAL CHIP 4.7K 5% 1/10W	
R602	1-216-829-11	METAL CHIP 4.7K 5% 1/10W	
R603	1-216-829-11	METAL CHIP 4.7K 5% 1/10W	
R604	1-216-841-11	METAL CHIP 47K 5% 1/10W	
R605	1-216-829-11	METAL CHIP 4.7K 5% 1/10W	
R606	1-216-829-11	METAL CHIP 4.7K 5% 1/10W	
R607	1-216-841-11	METAL CHIP 47K 5% 1/10W	
R608	1-216-829-11	METAL CHIP 4.7K 5% 1/10W	
R609	1-216-837-11	METAL CHIP 22K 5% 1/10W	
R610	1-216-833-11	METAL CHIP 10K 5% 1/10W	
R611	1-216-837-11	METAL CHIP 22K 5% 1/10W	
R612	1-216-833-11	METAL CHIP 10K 5% 1/10W	
R613	1-216-837-11	METAL CHIP 22K 5% 1/10W	
R614	1-216-837-11	METAL CHIP 22K 5% 1/10W	
R615	1-216-837-11	METAL CHIP 22K 5% 1/10W	
R616	1-216-833-11	METAL CHIP 10K 5% 1/10W	
R617	1-216-837-11	METAL CHIP 22K 5% 1/10W	
R618	1-216-833-11	METAL CHIP 10K 5% 1/10W	
R619	1-216-837-11	METAL CHIP 22K 5% 1/10W	
R620	1-216-837-11	METAL CHIP 22K 5% 1/10W	
R621	1-216-833-11	METAL CHIP 10K 5% 1/10W	
R622	1-216-049-11	RES-CHIP 1K 5% 1/10W	
R623	1-216-833-11	METAL CHIP 10K 5% 1/10W	
R624	1-216-049-11	RES-CHIP 1K 5% 1/10W	
R625	1-216-833-11	METAL CHIP 10K 5% 1/10W	
R626	1-216-049-11	RES-CHIP 1K 5% 1/10W	
R627	1-216-833-11	METAL CHIP 10K 5% 1/10W	
R628	1-216-833-11	METAL CHIP 10K 5% 1/10W	
R629	1-216-150-11	RES-CHIP 10 5% 1/8W	
R630	1-216-809-11	METAL CHIP 100 5% 1/10W	(AEP, UK)
R631	1-216-809-11	METAL CHIP 100 5% 1/10W	(AEP, UK)
R632	1-216-809-11	METAL CHIP 100 5% 1/10W	
R633	1-216-809-11	METAL CHIP 100 5% 1/10W	
R634	1-216-809-11	METAL CHIP 100 5% 1/10W	
R635	1-216-809-11	METAL CHIP 100 5% 1/10W	
R636	1-216-833-11	METAL CHIP 10K 5% 1/10W	
R637	1-216-833-11	METAL CHIP 10K 5% 1/10W	
R638	1-216-809-11	METAL CHIP 100 5% 1/10W	
R639	1-216-829-11	METAL CHIP 4.7K 5% 1/10W	
R640	1-216-834-11	METAL CHIP 12K 5% 1/10W	
R641	1-216-849-11	METAL CHIP 220K 5% 1/10W	
R642	1-216-817-11	METAL CHIP 470 5% 1/10W	
R643	1-216-819-11	METAL CHIP 680 5% 1/10W	
R644	1-216-821-11	METAL CHIP 1K 5% 1/10W	
R645	1-216-823-11	METAL CHIP 1.5K 5% 1/10W	
R646	1-216-823-11	METAL CHIP 1.5K 5% 1/10W	
R647	1-216-825-11	METAL CHIP 2.2K 5% 1/10W	
R648	1-216-827-11	METAL CHIP 3.3K 5% 1/10W	
R649	1-216-829-11	METAL CHIP 4.7K 5% 1/10W	

PANEL

Ref. No.	Part No.	Description			Remark
R650	1-218-867-11	METAL CHIP	6.8K	0.5%	1/10W
R651	1-216-833-11	METAL CHIP	10K	5%	1/10W
R653	1-216-817-11	METAL CHIP	470	5%	1/10W
R654	1-216-819-11	METAL CHIP	680	5%	1/10W
R655	1-216-821-11	METAL CHIP	1K	5%	1/10W
R656	1-216-823-11	METAL CHIP	1.5K	5%	1/10W
R657	1-216-823-11	METAL CHIP	1.5K	5%	1/10W
R658	1-216-825-11	METAL CHIP	2.2K	5%	1/10W
R659	1-216-827-11	METAL CHIP	3.3K	5%	1/10W
R660	1-216-829-11	METAL CHIP	4.7K	5%	1/10W
R661	1-218-867-11	METAL CHIP	6.8K	0.5%	1/10W
R662	1-216-833-11	METAL CHIP	10K	5%	1/10W
R664	1-216-817-11	METAL CHIP	470	5%	1/10W
R665	1-216-819-11	METAL CHIP	680	5%	1/10W
R666	1-216-821-11	METAL CHIP	1K	5%	1/10W
R667	1-216-823-11	METAL CHIP	1.5K	5%	1/10W
R668	1-216-823-11	METAL CHIP	1.5K	5%	1/10W
R669	1-216-825-11	METAL CHIP	2.2K	5%	1/10W
R670	1-216-827-11	METAL CHIP	3.3K	5%	1/10W
R671	1-216-829-11	METAL CHIP	4.7K	5%	1/10W
R672	1-218-867-11	METAL CHIP	6.8K	0.5%	1/10W
R673	1-216-833-11	METAL CHIP	10K	5%	1/10W
R674	1-216-835-11	METAL CHIP	15K	5%	1/10W
R675	1-216-835-11	METAL CHIP	15K	5%	1/10W
R676	1-216-835-11	METAL CHIP	15K	5%	1/10W
R677	1-216-864-11	SHORT CHIP	0		
R678	1-216-845-11	METAL CHIP	100K	5%	1/10W
R679	1-216-172-00	RES-CHIP	82	5%	1/8W
R680	1-216-838-11	METAL CHIP	27K	5%	1/10W
R681	1-216-849-11	METAL CHIP	220K	5%	1/10W
R682	1-216-833-11	METAL CHIP	10K	5%	1/10W
R683	1-216-849-11	METAL CHIP	220K	5%	1/10W
R684	1-216-821-11	METAL CHIP	1K	5%	1/10W
R685	1-216-841-11	METAL CHIP	47K	5%	1/10W
R686	1-216-841-11	METAL CHIP	47K	5%	1/10W
R687	1-216-833-11	METAL CHIP	10K	5%	1/10W
R688	1-216-817-11	METAL CHIP	470	5%	1/10W
R689	1-216-829-11	METAL CHIP	4.7K	5%	1/10W
R690	1-216-809-11	METAL CHIP	100	5%	1/10W
R691	1-216-809-11	METAL CHIP	100	5%	1/10W
R692	1-216-809-11	METAL CHIP	100	5%	1/10W
R693	1-216-809-11	METAL CHIP	100	5%	1/10W
R694	1-216-809-11	METAL CHIP	100	5%	1/10W
R695	1-216-809-11	METAL CHIP	100	5%	1/10W
R696	1-216-809-11	METAL CHIP	100	5%	1/10W
R697	1-216-809-11	METAL CHIP	100	5%	1/10W
R701	1-216-833-11	METAL CHIP	10K	5%	1/10W
R702	1-216-797-11	METAL CHIP	10	5%	1/10W
R703	1-216-833-11	METAL CHIP	10K	5%	1/10W
R704	1-216-797-11	METAL CHIP	10	5%	1/10W
R705	1-216-809-11	METAL CHIP	100	5%	1/10W
R706	1-216-809-11	METAL CHIP	100	5%	1/10W
R707	1-216-182-00	RES-CHIP	220	5%	1/8W
R708	1-216-182-00	RES-CHIP	220	5%	1/8W
R710	1-216-833-11	METAL CHIP	10K	5%	1/10W
R711	1-216-833-11	METAL CHIP	10K	5%	1/10W
R712	1-216-797-11	METAL CHIP	10	5%	1/10W
R713	1-216-797-11	METAL CHIP	10	5%	1/10W
R714	1-216-809-11	METAL CHIP	100	5%	1/10W
R715	1-216-805-11	METAL CHIP	47	5%	1/10W
R716	1-216-837-11	METAL CHIP	22K	5%	1/10W
R717	1-216-827-11	METAL CHIP	3.3K	5%	1/10W
R718	1-216-837-11	METAL CHIP	22K	5%	1/10W
R719	1-216-827-11	METAL CHIP	3.3K	5%	1/10W
R723	1-216-809-11	METAL CHIP	100	5%	1/10W
R725	1-216-809-11	METAL CHIP	100	5%	1/10W
R726	1-216-833-11	METAL CHIP	10K	5%	1/10W
R727	1-220-397-11	METAL CHIP	4.7M	5%	1/10W
R728	1-220-397-11	METAL CHIP	4.7M	5%	1/10W
R729	1-216-809-11	METAL CHIP	100	5%	1/10W
R730	1-216-809-11	METAL CHIP	100	5%	1/10W
R731	1-216-809-11	METAL CHIP	100	5%	1/10W
R732	1-216-853-11	METAL CHIP	470K	5%	1/10W
R733	1-216-809-11	METAL CHIP	100	5%	1/10W
R734	1-216-821-11	METAL CHIP	1K	5%	1/10W
R735	1-216-821-11	METAL CHIP	1K	5%	1/10W
R736	1-216-821-11	METAL CHIP	1K	5%	1/10W
R737	1-216-845-11	METAL CHIP	100K	5%	1/10W
R738	1-216-845-11	METAL CHIP	100K	5%	1/10W
R739	1-216-845-11	METAL CHIP	100K	5%	1/10W
R740	1-216-845-11	METAL CHIP	100K	5%	1/10W
R741	1-216-845-11	METAL CHIP	100K	5%	1/10W
R742	1-216-845-11	METAL CHIP	100K	5%	1/10W
R743	1-216-845-11	METAL CHIP	100K	5%	1/10W
R744	1-216-845-11	METAL CHIP	100K	5%	1/10W
R745	1-216-845-11	METAL CHIP	100K	5%	1/10W
R746	1-216-845-11	METAL CHIP	100K	5%	1/10W
R747	1-216-845-11	METAL CHIP	100K	5%	1/10W
R748	1-216-845-11	METAL CHIP	100K	5%	1/10W
R749	1-216-845-11	METAL CHIP	100K	5%	1/10W
R750	1-216-845-11	METAL CHIP	100K	5%	1/10W
R751	1-216-845-11	METAL CHIP	100K	5%	1/10W
R752	1-216-845-11	METAL CHIP	100K	5%	1/10W
R753	1-216-845-11	METAL CHIP	100K	5%	1/10W
R754	1-216-845-11	METAL CHIP	100K	5%	1/10W
R755	1-216-845-11	METAL CHIP	100K	5%	1/10W
R756	1-216-845-11	METAL CHIP	100K	5%	1/10W
R757	1-216-845-11	METAL CHIP	100K	5%	1/10W
R758	1-216-845-11	METAL CHIP	100K	5%	1/10W
R759	1-216-845-11	METAL CHIP	100K	5%	1/10W
R760	1-216-845-11	METAL CHIP	100K	5%	1/10W
R761	1-216-845-11	METAL CHIP	100K	5%	1/10W
R762	1-216-845-11	METAL CHIP	100K	5%	1/10W
R763	1-216-845-11	METAL CHIP	100K	5%	1/10W
R764	1-216-845-11	METAL CHIP	100K	5%	1/10W
R765	1-216-845-11	METAL CHIP	100K	5%	1/10W
R766	1-216-845-11	METAL CHIP	100K	5%	1/10W
R767	1-216-845-11	METAL CHIP	100K	5%	1/10W
R768	1-216-845-11	METAL CHIP	100K	5%	1/10W
R769	1-216-845-11	METAL CHIP	100K	5%	1/10W
R770	1-216-845-11	METAL CHIP	100K	5%	1/10W
R771	1-216-841-11	METAL CHIP	47K	5%	1/10W
R772	1-216-813-11	METAL CHIP	220	5%	1/10W
R773	1-216-809-11	METAL CHIP	100	5%	1/10W
R774	1-216-809-11	METAL CHIP	100	5%	1/10W

PANEL **POWER**

Ref. No.	Part No.	Description			Remark
R775	1-216-809-11	METAL CHIP	100	5%	1/10W
R776	1-216-817-11	METAL CHIP	470	5%	1/10W
R777	1-216-809-11	METAL CHIP	100	5%	1/10W
R778	1-216-809-11	METAL CHIP	100	5%	1/10W
R779	1-216-809-11	METAL CHIP	100	5%	1/10W
R780	1-216-817-11	METAL CHIP	470	5%	1/10W
R781	1-216-809-11	METAL CHIP	100	5%	1/10W
R782	1-216-809-11	METAL CHIP	100	5%	1/10W
R783	1-216-809-11	METAL CHIP	100	5%	1/10W
R784	1-216-809-11	METAL CHIP	100	5%	1/10W
R785	1-216-809-11	METAL CHIP	100	5%	1/10W
R786	1-216-833-11	METAL CHIP	10K	5%	1/10W
R787	1-216-809-11	METAL CHIP	100	5%	1/10W
R788	1-216-809-11	METAL CHIP	100	5%	1/10W
R789	1-216-841-11	METAL CHIP	47K	5%	1/10W
R790	1-216-821-11	METAL CHIP	1K	5%	1/10W
R791	1-216-809-11	METAL CHIP	100	5%	1/10W
R792	1-216-809-11	METAL CHIP	100	5%	1/10W
R793	1-216-809-11	METAL CHIP	100	5%	1/10W
R794	1-216-809-11	METAL CHIP	100	5%	1/10W
R795	1-216-809-11	METAL CHIP	100	5%	1/10W
R796	1-216-809-11	METAL CHIP	100	5%	1/10W
R797	1-216-821-11	METAL CHIP	1K	5%	1/10W
R798	1-216-821-11	METAL CHIP	1K	5%	1/10W
R799	1-216-821-11	METAL CHIP	1K	5%	1/10W
R854	1-216-813-11	METAL CHIP	220	5%	1/10W
R863	1-216-170-00	RES-CHIP	68	5%	1/8W
		< SWITCH >			
S601	1-762-875-21	SWITCH, KEYBOARD (I/⏻)			
S602	1-762-875-21	SWITCH, KEYBOARD (DISPLAY)			
S603	1-762-875-21	SWITCH, KEYBOARD (ENTER)			
S604	1-762-875-21	SWITCH, KEYBOARD (DISC 1)			
S605	1-762-875-21	SWITCH, KEYBOARD (DISC 2)			
S606	1-762-875-21	SWITCH, KEYBOARD (DISC 3)			
S607	1-762-875-21	SWITCH, KEYBOARD (DISC SKIP/EX-CHANGE)			
S608	1-762-875-21	SWITCH, KEYBOARD (⏏)			
S609	1-762-875-21	SWITCH, KEYBOARD (SURROUND)			
S610	1-762-875-21	SWITCH, KEYBOARD (PLAY MODE/TUNING MODE)			
S621	1-762-875-21	SWITCH, KEYBOARD (CD)			
S622	1-762-875-21	SWITCH, KEYBOARD (TUNER/BAND)			
S623	1-762-875-21	SWITCH, KEYBOARD (TAPE A/B)			
S624	1-762-875-21	SWITCH, KEYBOARD (VIDEO/MD)			
S625	1-762-875-21	SWITCH, KEYBOARD (P FILE)			
S626	1-762-875-21	SWITCH, KEYBOARD (TREBLE –)			
S627	1-762-875-21	SWITCH, KEYBOARD (TREBLE +)			
S628	1-762-875-21	SWITCH, KEYBOARD (MIDDLE –)			
S629	1-762-875-21	SWITCH, KEYBOARD (MIDDLE +)			
S630	1-762-875-21	SWITCH, KEYBOARD (BASS –)			
S641	1-762-875-21	SWITCH, KEYBOARD (▶▶ ALBUM +)			
S642	1-762-875-21	SWITCH, KEYBOARD (❚❚)			
S643	1-762-875-21	SWITCH, KEYBOARD (◁ ▷)			
S644	1-762-875-21	SWITCH, KEYBOARD (■)			
S645	1-762-875-21	SWITCH, KEYBOARD (◀◀ ALBUM –)			
S646	1-762-875-21	SWITCH, KEYBOARD (REC/PAUSE/START)			
S647	1-762-875-21	SWITCH, KEYBOARD (CD SYNC)			

Ref. No.	Part No.	Description			Remark
S648	1-762-875-21	SWITCH, KEYBOARD (i-BASS)			
S649	1-762-875-21	SWITCH, KEYBOARD (PRESET EQ)			
S650	1-762-875-21	SWITCH, KEYBOARD (BASS +)			
S660	1-786-417-11	SW, RTRY RE012307PVB30F (VOLUME)			
S661	1-786-418-11	SWITCH, ROTARY (ENCODER) (AMS/TUNING)			
		< VIBRATOR >			
X601	1-760-252-12	VIBRATOR, CRYSTAL (32.768kHz)			
X602	1-795-004-21	VIBRATOR, CERAMIC (10MHz)			
**********					
	A-4751-490-A	POWER BOARD, COMPLETE (AEP, UK, CIS)			
	A-4751-499-A	POWER BOARD, COMPLETE (E51)			
	A-4752-996-A	POWER BOARD, COMPLETE (MX)			
		**********			
	7-685-872-09	SCREW +BVTT 3X8 (S)			
		< CAPACITOR >			
C402	1-162-306-11	CERAMIC	0.01uF	20%	16V
C403	1-137-749-11	MYLAR	0.1uF		100V
C404	1-137-749-11	MYLAR	0.1uF		100V
C405	1-127-814-11	ELECT	3300uF	20%	80V (E51, MX)
C405	1-135-516-11	ELECT	3300uF	20%	63V (AEP, UK, CIS)
C406	1-127-814-11	ELECT	3300uF	20%	80V (E51, MX)
C406	1-135-516-11	ELECT	3300uF	20%	63V (AEP, UK, CIS)
C407	1-162-306-11	CERAMIC	0.01uF	20%	16V (AEP, UK, CIS)
C408	1-162-306-11	CERAMIC	0.01uF	20%	16V (AEP, UK, CIS)
C409	1-127-811-11	ELECT	3300uF	20%	50V (E51, MX)
C410	1-127-811-11	ELECT	3300uF	20%	50V (E51, MX)
C413	1-136-497-81	FILM	0.1uF	5%	50V (E51, MX)
C414	1-136-497-81	FILM	0.1uF	5%	50V (E51, MX)
C441	1-126-964-11	ELECT	10uF	20%	50V
C442	1-126-964-11	ELECT	10uF	20%	50V
C443	1-162-294-31	CERAMIC	0.001uF	10%	50V
C444	1-162-294-31	CERAMIC	0.001uF	10%	50V
C445	1-162-282-31	CERAMIC	100PF	10%	50V
C446	1-162-282-31	CERAMIC	100PF	10%	50V
C447	1-126-965-11	ELECT	22uF	20%	50V (AEP, UK, CIS)
C447	1-126-967-11	ELECT	47uF	20%	50V (E51, MX)
C448	1-126-965-11	ELECT	22uF	20%	50V (AEP, UK, CIS)
C448	1-126-967-11	ELECT	47uF	20%	50V (E51, MX)
C451	1-136-497-81	FILM	0.1uF	5%	50V
C452	1-136-497-81	FILM	0.1uF	5%	50V
C453	1-136-497-81	FILM	0.1uF	5%	50V
C454	1-136-497-81	FILM	0.1uF	5%	50V

POWER

Ref. No.	Part No.	Description				Remark
C455	1-136-497-81	FILM	0.1uF	5%	50V	(AEP, UK, CIS)
C456	1-136-497-81	FILM	0.1uF	5%	50V	(AEP, UK, CIS)
C457	1-136-497-81	FILM	0.1uF	5%	50V	(AEP, UK, CIS)
C458	1-136-497-81	FILM	0.1uF	5%	50V	(AEP, UK, CIS)
C459	1-162-294-31	CERAMIC	0.001uF	10%	50V	(AEP, UK, CIS)
C460	1-162-294-31	CERAMIC	0.001uF	10%	50V	(AEP, UK, CIS)
C461	1-128-562-11	ELECT	47uF	20%	100V	(E51, MX)
C462	1-128-562-11	ELECT	47uF	20%	100V	(E51, MX)
C463	1-104-655-91	ELECT	470uF	20%	6.3V	(E51, MX)
C481	1-104-665-11	ELECT	100uF	20%	25V	
C486	1-126-961-11	ELECT	2.2uF	20%	50V	
C487	1-126-963-11	ELECT	4.7uF	20%	50V	
C488	1-126-965-11	ELECT	22uF	20%	50V	(AEP, UK, CIS)
C489	1-128-563-11	ELECT	100uF	20%	100V	(AEP, UK, CIS)
C491	1-162-294-31	CERAMIC	0.001uF	10%	50V	(AEP, UK, CIS)
C492	1-162-306-11	CERAMIC	0.01uF	20%	16V	(E51, MX)
		< CONNECTOR >				
CN441	1-778-981-21	CONNECTOR, BOARD TO BOARD 13P				
		< DIODE >				
D401	6-500-360-01	DIODE D10XB20				
D402	6-500-360-01	DIODE D10XB20 (E51, MX)				
D441	8-719-991-33	DIODE 1SS133T-77				
D442	8-719-991-33	DIODE 1SS133T-77				
D443	8-719-991-33	DIODE 1SS133T-77				
D444	8-719-991-33	DIODE 1SS133T-77 (E51, MX)				
D445	8-719-947-65	DIODE MTZJ-T-72-16B (E51, MX)				
D446	8-719-947-65	DIODE MTZJ-T-72-16B (E51, MX)				
D481	8-719-991-33	DIODE 1SS133T-77				
D482	8-719-991-33	DIODE 1SS133T-77				
D483	8-719-991-33	DIODE 1SS133T-77 (AEP, UK, CIS)				
		< EARTH TERMINAL >				
EP401	1-537-771-21	TERMINAL BOARD, GROUND				
EP402	1-537-771-21	TERMINAL BOARD, GROUND				
EP491	1-537-771-21	TERMINAL BOARD, GROUND (E51, MX)				
		< IC >				
IC441	6-600-169-01	IC STK412-240 (E51, MX)				
IC441	6-600-221-01	IC STK403-130 (AEP, UK, CIS)				
		< TERMINAL BOARD >				
JK441	1-694-884-11	TERMINAL BOARD (4P) (SPEAKER IMPEDANCE USE 6-16Ω)				

Ref. No.	Part No.	Description				Remark
		< COIL >				
L441	1-422-009-13	COIL, AIR-CORE				
L442	1-422-009-13	COIL, AIR-CORE				
		< TRANSISTOR >				
Q441	8-729-140-84	TRANSISTOR	2SC1841-PAFAEA			
Q442	8-729-140-84	TRANSISTOR	2SC1841-PAFAEA			
Q481	8-729-119-79	TRANSISTOR	2SC2785-FEK			
Q482	8-729-119-79	TRANSISTOR	2SC2785-FEK			
Q483	8-729-119-79	TRANSISTOR	2SC2785-FEK			
Q484	8-729-119-79	TRANSISTOR	2SC2785-FEK			
Q485	8-729-119-76	TRANSISTOR	2SA1175-HFE			
Q486	8-729-119-79	TRANSISTOR	2SC2785-FEK			
Q487	8-729-119-79	TRANSISTOR	2SC2785-FEK			
Q488	8-729-119-79	TRANSISTOR	2SC2785-FEK			
Q489	8-729-140-84	TRANSISTOR	2SC1841-PAFAEA			
Q490	8-729-140-84	TRANSISTOR	2SC1841-PAFAEA (E51, MX)			
Q491	8-729-821-00	TRANSISTOR	2SA1207 (E51, MX)			
		< RESISTOR >				
R401	1-247-879-91	CARBON	100K	5%	1/4W	
R402	1-247-879-91	CARBON	100K	5%	1/4W	
R403	1-247-879-91	CARBON	100K	5%	1/4W	(E51, MX)
R404	1-247-879-91	CARBON	100K	5%	1/4W	(E51, MX)
R407	1-260-316-51	CARBON	100	5%	1/2W	
R409	1-247-879-91	CARBON	100K	5%	1/4W	(E51, MX)
R410	1-247-879-91	CARBON	100K	5%	1/4W	(E51, MX)
R411	1-249-421-11	CARBON	2.2K	5%	1/4W	
R412	1-249-421-11	CARBON	2.2K	5%	1/4W	
R413	1-249-429-11	CARBON	10K	5%	1/4W	
R414	1-249-429-11	CARBON	10K	5%	1/4W	
R441	1-247-831-91	CARBON	1K	5%	1/4W	
R442	1-247-831-91	CARBON	1K	5%	1/4W	
R443	1-247-871-91	CARBON	47K	5%	1/4W	(AEP, UK, CIS)
R443	1-247-873-91	CARBON	56K	5%	1/4W	(E51, MX)
R444	1-247-871-91	CARBON	47K	5%	1/4W	(AEP, UK, CIS)
R444	1-247-873-91	CARBON	56K	5%	1/4W	(E51, MX)
R445	1-247-831-91	CARBON	1K	5%	1/4W	
R446	1-247-831-91	CARBON	1K	5%	1/4W	
R447	1-247-871-91	CARBON	47K	5%	1/4W	(AEP, UK, CIS)
R447	1-247-873-91	CARBON	56K	5%	1/4W	(E51, MX)
R448	1-247-871-91	CARBON	47K	5%	1/4W	(AEP, UK, CIS)
R448	1-247-873-91	CARBON	56K	5%	1/4W	(E51, MX)
⚠R451	1-217-156-00	METAL	0.22	10%	5W	F
⚠R452	1-217-156-00	METAL	0.22	10%	5W	F
R453	1-260-076-11	CARBON	10	5%	1/2W	
R454	1-260-076-11	CARBON	10	5%	1/2W	

POWER | SENSOR | SUB TRANS

Ref. No.	Part No.	Description			Remark
R455	1-247-831-91	CARBON	1K	5%	1/4W
R456	1-247-831-91	CARBON	1K	5%	1/4W
R457	1-249-431-11	CARBON	15K	5%	1/4W (E51, MX)
R457	1-247-863-11	CARBON	22K	5%	1/4W (AEP, UK, CIS)
R458	1-249-431-11	CARBON	15K	5%	1/4W (E51, MX)
R458	1-247-863-11	CARBON	22K	5%	1/4W (AEP, UK, CIS)
R459	1-247-871-91	CARBON	47K	5%	1/4W (AEP, UK, CIS)
R459	1-247-879-91	CARBON	100K	5%	1/4W (E51, MX)
R460	1-247-871-91	CARBON	47K	5%	1/4W (AEP, UK, CIS)
R460	1-247-879-91	CARBON	100K	5%	1/4W (E51, MX)
R461	1-260-076-11	CARBON	10	5%	1/2W
R462	1-260-076-11	CARBON	10	5%	1/2W
R463	1-260-076-11	CARBON	10	5%	1/2W (AEP, UK, CIS)
R464	1-260-076-11	CARBON	10	5%	1/2W (AEP, UK, CIS)
R465	1-247-871-91	CARBON	47K	5%	1/4W
R466	1-247-873-91	CARBON	56K	5%	1/4W
R467	1-215-872-11	METAL OXIDE	3.3K	5%	1W (E51, MX)
R467	1-249-435-11	CARBON	33K	5%	1/4W (AEP, UK, CIS)
R468	1-215-872-11	METAL OXIDE	3.3K	5%	1W (E51, MX)
R469	1-249-435-11	CARBON	33K	5%	1/4W (E51, MX)
R470	1-249-435-11	CARBON	33K	5%	1/4W (E51, MX)
R471	1-249-439-11	CARBON	68K	5%	1/4W (E51, MX)
R472	1-249-435-11	CARBON	33K	5%	1/4W (E51, MX)
R473	1-247-863-11	CARBON	22K	5%	1/4W (E51, MX)
R474	1-249-421-11	CARBON	2.2K	5%	1/4W (E51, MX)
R475	1-249-429-11	CARBON	10K	5%	1/4W (E51, MX)
R476	1-249-431-11	CARBON	15K	5%	1/4W (E51, MX)
R477	1-212-881-11	FUSIBLE	100	5%	1/4W (E51, MX)
R478	1-249-429-11	CARBON	10K	5%	1/4W (E51, MX)
R481	1-247-847-91	CARBON	4.7K	5%	1/4W
R482	1-249-429-11	CARBON	10K	5%	1/4W
R483	1-249-397-11	CARBON	22	5%	1/4W
R484	1-247-873-91	CARBON	56K	5%	1/4W
R485	1-247-879-91	CARBON	100K	5%	1/4W
R486	1-247-879-91	CARBON	100K	5%	1/4W
R487	1-249-435-11	CARBON	33K	5%	1/4W
R488	1-247-863-11	CARBON	22K	5%	1/4W
R489	1-247-847-91	CARBON	4.7K	5%	1/4W
R490	1-247-847-91	CARBON	4.7K	5%	1/4W
R491	1-247-863-11	CARBON	22K	5%	1/4W (AEP, UK, CIS)
R492	1-247-831-91	CARBON	1K	5%	1/4W (AEP, UK, CIS)
R493	1-249-435-11	CARBON	33K	5%	1/4W (AEP, UK, CIS)
R494	1-249-421-11	CARBON	2.2K	5%	1/4W (AEP, UK, CIS)
⚠R495	1-202-972-61	FUSIBLE	1	5%	1/4W F
⚠R496	1-212-881-11	FUSIBLE	100	5%	1/4W F
		< RELAY >			
RY441	1-755-372-11	RELAY (E51, MX)			
RY441	1-755-373-11	RELAY (AEP, UK, CIS)			
		< THERMISTOR >			
TH441	1-807-796-11	THERMISTOR			

****

	1-687-132-12	SENSOR BOARD			
		**********			
		< CONNECTOR >			
CN731	1-785-329-21	PIN, CONNECTOR (LIGHT ANGLE) 3P			
		< IC >			
IC731	(Not supplied)	IC RPI-576			

****

		SUB TRANS BOARD			
		**********			
		< CONNECTOR >			
CN901	1-564-321-00	PIN, CONNECTOR (3.96mm PITCH) 2P			
		< DIODE >			
D901	8-719-991-33	DIODE 1SS133T-77			
D902	6-500-522-21	DIODE 10EDB40-TB3			
D903	6-500-522-21	DIODE 10EDB40-TB3			
D904	6-500-522-21	DIODE 10EDB40-TB3			
D905	6-500-522-21	DIODE 10EDB40-TB3			
		< TRANSFORMER >			
⚠PT902	X-4956-293-1	SUB TRANS ASSY (AEP, UK, CIS)			
⚠PT902	X-4956-294-1	TRANS ASSY, SUB (E51)			
⚠PT902	X-4956-322-1	SUB TRANS ASSY (MX)			
		< RELAY >			
⚠RY901	1-755-276-11	RELAY, POWER			
		< SWITCH >			
⚠S901	1-786-055-21	SELECTOR, VOLTAGE (VOLTAGE SELECT)			(E51)

****

The components identified by mark ⚠ or dotted line with mark ⚠ are critical for safety.
Replace only with part number specified.

SW | TRANS | TRANSLATION

Ref. No.	Part No.	Description			Remark
	1-687-669-12	SW BOARD			
		*********			
		< SWITCH >			
S751	1-786-514-11	SWITCH, LEVER (SLIDE) (OPEN/CLOSE DETECT)			
**********					
	A-4751-489-A	TRANS BOARD, COMPLETE (AEP, UK, CIS)			
	A-4751-498-A	TRANS BOARD, COMPLETE (E51)			
	A-4752-953-A	TRANS BOARD, COMPLETE (MX)			
		**********			
	1-533-217-41	HOLDER, FUSE			
		< CAPACITOR >			
C906	1-164-159-11	CERAMIC	0.1uF		50V
C908	1-128-553-11	ELECT	220uF	20%	63V
C909	1-126-964-11	ELECT	10uF	20%	50V
C910	1-126-968-11	ELECT	100uF	20%	50V
C911	1-126-942-61	ELECT	1000uF	20%	25V
C920	1-131-679-31	FILM	0.01uF	5%	50V
C921	1-131-679-31	FILM	0.01uF	5%	50V
C922	1-131-679-31	FILM	0.01uF	5%	50V
C923	1-131-679-31	FILM	0.01uF	5%	50V
C924	1-136-165-00	FILM	0.1uF	5%	50V
C925	1-136-165-00	FILM	0.1uF	5%	50V
C926	1-164-159-11	CERAMIC	0.1uF		50V
		< CONNECTOR >			
CN904	1-564-321-00	PIN, CONNECTOR (3.96mm PITCH) 2P (EXCEPT E51)			
CN904	1-568-106-11	PIN, CONNECTOR (3.96mm PITCH) 4P (E51)			
CN905	1-564-506-11	PLUG, CONNECTOR 3P (AEP, UK, CIS)			
* CN905	1-564-508-11	PLUG, CONNECTOR 5P (E51, MX)			
* CN906	1-564-705-11	PIN, CONNECTOR (SMALL TYPE) 3P			
* CN907	1-764-333-11	PLUG, CONNECTOR 10P			
		< DIODE >			
D906	8-719-983-79	DIODE MTZJ-T-72-27D			
D908	6-500-522-21	DIODE 10EDB40-TB3			
		< TRANSISTOR >			
Q902	8-729-048-52	TRANSISTOR	2SA1932 (TP)		
		< RESISTOR >			
R903	1-249-430-11	CARBON	12K	5%	1/4W
R904	1-247-831-91	CARBON	1K	5%	1/4W
⚠ R908	1-202-972-61	FUSIBLE	1	5%	1/4W F
**********					
		TRANSLATION BOARD (AEP, UK, CIS)			
		**********			
		< CAPACITOR >			
C861	1-162-964-11	CERAMIC CHIP	0.001uF	10%	50V

Ref. No.	Part No.	Description	Remark
		< EARTH TERMINAL >	
EP802	1-537-771-21	TERMINAL BOARD, GROUND	
**********			
		MISCELLANEOUS	
		**********	
7	1-775-251-11	WIRE (FLAT TYPE) (27 CORE)	
9	1-469-854-11	CORE, FERRITE	
106	1-773-288-11	WIRE (FLAT TYPE) (29 CORE) (E51, MX)	
106	1-773-322-11	WIRE (FLAT TYPE) (31 CORE) (AEP, UK, CIS)	
107	1-827-145-11	WIRE (FLAT TYPE) (13 CORE)	
108	1-773-048-11	WIRE (FLAT TYPE) (17 CORE)	
111	1-796-486-71	DECK, MECHANICAL (CWM43FR34)	
251	1-769-940-11	WIRE (FLAT TYPE) (11 CORE) (E51, MX)	
251	1-777-353-11	WIRE (FLAT TYPE) (15 CORE) (AEP, UK, CIS)	
252	1-693-615-11	TUNER (FM/AM) (E51, MX)	
252	1-693-616-11	TUNER (FM/AM) (AEP, UK)	
252	1-693-654-11	TUNER (FM/AM) (CIS)	
308	1-400-285-11	F-BEAD, E2515MRT	
509	1-776-182-11	WIRE (FLAT TYPE) (5 CORE)	
602	1-471-035-11	MAGNET ASSY	
⚠ 657	8-820-244-11	OPTICAL PICK-UP (KSM-215DCP/C2NP)	
658	1-827-992-11	WIRE (FLAT TYPE) (16 CORE)	
⚠ F904	1-533-473-12	FUSE, GLASS TUBE (DIA. 5) (T6.3A/250V)	(E51, MX)
⚠ F904	1-576-655-12	FUSE, GLASS TUBE (DIA. 5) (T8A/250V)	(AEP, UK, CIS)
⚠ F905	1-533-473-12	FUSE, GLASS TUBE (DIA. 5) (T6.3A/250V)	(E51, MX)
⚠ F905	1-576-655-12	FUSE, GLASS TUBE (DIA. 5) (T8A/250V)	(AEP, UK, CIS)
⚠ F906	1-533-470-12	FUSE, GLASS TUBE (DIA. 5) (T3.15AL/250V)	
⚠ F907	1-533-470-12	FUSE, GLASS TUBE (DIA. 5) (T3.15AL/250V)	
⚠ F908	1-576-655-12	FUSE, GLASS TUBE (DIA. 5) (T8A/250V)	(E51, MX)
⚠ F909	1-576-655-12	FUSE, GLASS TUBE (DIA. 5) (T8A/250V)	(E51, MX)
M741	A-4723-963-A	MOTOR ASSY, TABLE	
M751	A-4736-655-A	MOTOR ASSY, LOADING	
M901	1-763-072-11	FAN, DC (E51)	
M901	1-763-117-13	FAN, DC (EXCEPT E51)	
⚠ PT901	1-443-234-11	TRANSFORMER, POWER (AEP, UK, CIS)	
⚠ PT901	1-443-251-11	TRANSFORMER, POWER (E51)	
⚠ PT901	1-443-295-11	TRANSFORMER, POWER (MX)	
S101	1-771-853-11	SWITCH, DETECTION (LIMIT)	
S711	1-477-680-12	ENCODER, ROTARY (DISC TRAY ADDRESS DETECT)	
⚠ W001	1-777-071-83	CORD, POWER (EXCEPT MX)	
⚠ W001	1-827-226-11	CORD, POWER (MX)	
**********			
		ACCESSORIES	
		**********	
	1-569-008-32	ADAPTOR, CONVERSION (E51)	
	1-770-019-51	ADAPTOR, CONVERSION PLUG (UK)	

The components identified by mark ⚠ or dotted line with mark ⚠ are critical for safety.
Replace only with part number specified.

MEMO

REVISION HISTORY

Clicking the version allows you to jump to the revised page.
Also, clicking the version at the upper right on the revised page allows you to jump to the next revised page.

Ver.	Date	Description of Revision
1.0	2004.04	New