COLOUR TV SCHEMATIC DIAGRAM

MODEL: PH03FS(14"-21")

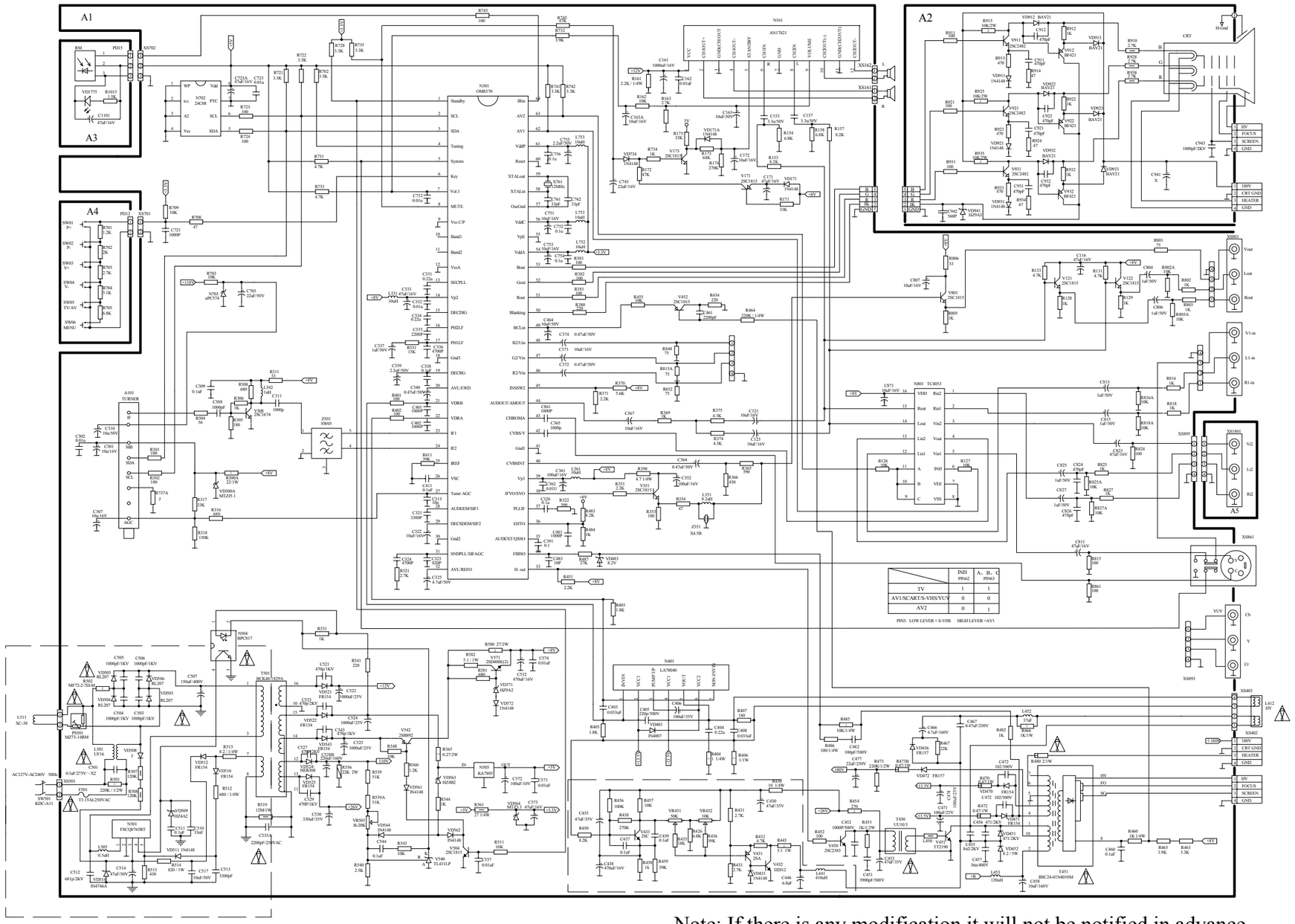

Note: If there is any modification,it will not be notified in advance.