COLOR TELEVISION RECEIVER

Chassis : KS7A(N_R2)_Gold Rush
Model : CL21M21MQUXXAZ
CL21N11MQUXXAZ
CL29M21MQUXXAZ
CL29Z6PQUX/XAZ
CL34Z6PQUX/XAZ

SERVICE Manual

COLOR TELEVISION RECEIVER

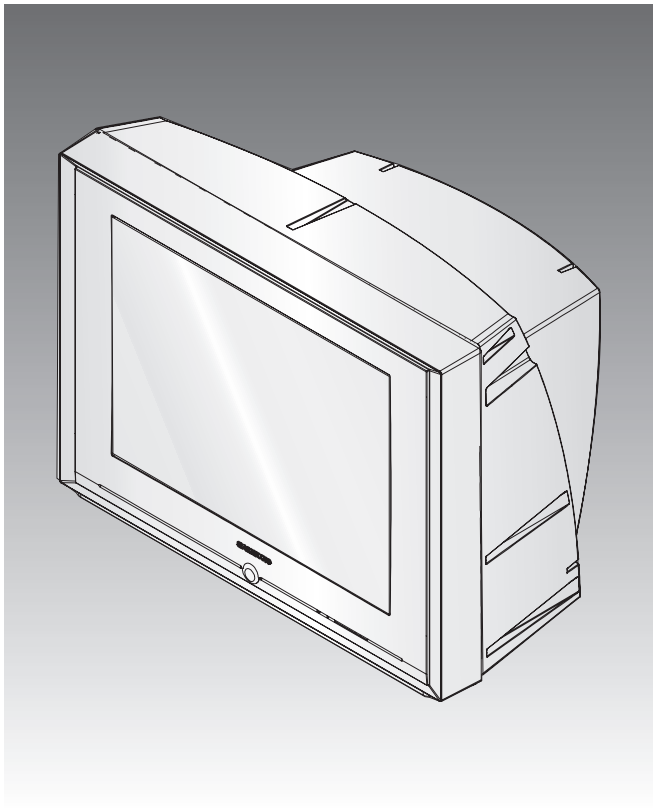

CONTENTS

1. Specifications
2. Alignment and Adjustments
3. Block Diagram
4. Exploded View & Parts List
5. Electrical Parts List
6. Schematic Diagrams

This Service Manual is a property of Samsung Electronics Co.,Ltd.
Any unauthorized use of Manual can be punished under applicable International and/or domestic law.

© Samsung Electronics Co., Ltd. **Aug. 2004**
Printed in Korea
AA82-01868A

2. Alignment and Adjustments

2-1 General Alignment Instructions

1. Usually, a color TV-VCR needs only slight touch-up adjustment upon installation.
   Check the basic characteristics such as height, horizontal and vertical sync and focus.

2. Observe the picture for good black and white details. There should be objectionable color shading; if color shading is present, demagnetize, perform purity and convergence adjustments described below.

3. Use the specified test equipment or its equivalent.

4. Correct impedance matching is essential.

5. Avoid overload. Excessive signal from a sweep generator might overload the front-end of the TV.
   When inserting signal markers, do not allow the marker generator to distort test results.

6. Connect the TV only to an AC power source with voltage and frequency as specified on the backcover ameplate.

7. Do not attempt to connect or disconnect any wires while the TV is turned on. Make sure that the power cord is disconnected before replacing any parts.

8. To protect against shock hazard, use an isolation transformer.

2-2 Automatic Degaussing

A degaussing coil is mounted around the picture tube, so that external degaussing after moving the TV should be unnecessary. But the receiver must be properly degaussed upon installation.

The degaussing coil operates for about 1 second after the power is switched ON. If the set is moved or turned in a different direction, the power should be OFF for at least 10 minutes.

If the chassis or parts of the cabinet become magnetized, poor color purity will result. If this happens, use an external degaussing coil. Slowly move the degaussing coil around the faceplate of the picture tube and the sides and front of the receiver. Slowly withdraw the coil to a distance of about 6 feet before turning power OFF.

If color shading persists, perform the following Color purity and Convergence adjustments.

2-3 High Voltage Check

CAUTION : There is no high voltage adjustment on this chassis. The B+ power supply should be +135 volts (with full color- bar input and normal picture level).

1. Connect a digital voltmeter to the second anode of the picture tube.

2. Turn on the TV. Set the Brightness and Contrast controls to minimum (zero beam current).

3. Adjust the Brightness and contrast controls to both extremes. Ensure that the high voltage does not exceed 30 KV under any conditions.

2-4 FOCUS Adjustment

1. Iput a black and white signal.
2. Adjust the tuning control for the clearest picture.
3. Adjust the FOCUS control for well defined scanning lines in the center area of the screen.

2-5 Factory Adjustment

2-5-1 Service Mode

1. To enter the "Service Mode", Press the remote-control keys in this sequence :

- If you do not have Factory remote-control

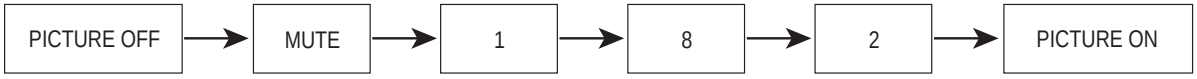

- If you have Factory remote-control

2-5-2 Factoy Mode OSD

2-5-2(A) ADJUST

Service

Deflection
Video Adujst 1
Video Adujst 2
Video Adujst 3
OPTION
YC DELAY
TEST PATTERN
EEPROM
BUS STOP
CHCKSUM
RESET
G2 ADJUST

2-6 Functions of Each Port in Service Mode

DEFLECTION (NT 60Hz)

Item	Remark	CL29T21 CL29M21 CT29M20MQUXXTC CT29M16MQUXXTC	CT29K10MQUXXTW	CL25M6 CL25M5	CT25M20MQUXXTC	TXP2434FX	TXP2734FX TXP2728FX TXP2730FX TXP2730S	CL21S8 CL21T21 CL21M21 CT21T20MQUXXTC
		29" SDI MST	29" SDI MST	25" SDI MST	25" SDI MST	25" SDI MST	29" SDI MST	21" SDI MST
V Amp	ADJ	28	28	9	9	9	28	31
V Shift	ADJ	-30	-30	-20	-20	-20	-30	-28
H EW	ADJ	-2	-2	40	40	40	-2	14
H Shift	ADJ	130	130	123	123	123	130	146
V Linearity	ADJ	-8	-8	-8	-8	-8	-8	-4
V SC	FIX	43	43	43	43	43	43	43
H Parabola	ADJ	67	67	60	60	60	63	7
Upper Corner	ADJ	1	1	-2	-2	-2	1	8
Lower Corner	ADJ	-10	-10	-13	-13	-13	-10	-4
Upper Corner6	FIX	-7	-7	-7	-7	-7	-7	-7
Lower Corner6	FIX	8	8	8	8	8	8	8
H Trapezium	ADJ	9	9	8	8	8	9	4
Bow	ADJ	3	3	-1	-1	-1	3	3
Angle	ADJ	0	0	0	0	0	0	0
EHT Time	FIX	20	20	20	20	20	20	20
EHT Threshold	FIX	1	1	1	1	1	1	1
EHT Vertical	FIX	-12	-12	-12	-12	-12	-12	-12
EHT Horizontal	FIX	77	77	77	77	77	77	77
EHT Vertical2	FIX	-10	-10	-10	-10	-10	-10	-10
EHT Horizontal2	FIX	8	8	8	8	8	8	17

Item	Remark	Brazil CL34Z6P	Brazil CL29Z6P CL29M21	Brazil CL21M21 CL21N11				
		34" TSB(USA) MTPD	29" SDI MST	29" SDI MST				
V Amp	ADJ	28	28	31				
V Shift	ADJ	-30	-30	-28				
H EW	ADJ	-2	-2	14				
H Shift	ADJ	130	130	146				
V Linearity	ADJ	-8	-8	-6				
V SC	FIX	43	43	34				
H Parabola	ADJ	67	67	7				
Upper Corner	ADJ	1	1	8				
Lower Corner	ADJ	-10	-10	-4				
Upper Corner6	FIX	-7	-7	-7				
Lower Corner6	FIX	8	8	8				
H Trapezium	ADJ	9	9	4				
Bow	ADJ	3	3	3				
Angle	ADJ	0	0	0				
EHT Time	FIX	20	20	30				
EHT Threshold	FIX	1	1	10				
EHT Vertical	FIX	2	-12	0				
EHT Horizontal	FIX	30	77	0				
EHT Vertical2	FIX	-17	-10	-50				
EHT Horizontal2	FIX	7	8	0				

DEFLECTION (PAL 50Hz)

Item	Remark	CL29T21 CL29M21 CT29M20MQUXXTC CT29M16MQUXXTC	CT29K10MQUXXTW	CL25M6 CL25M5	CT25M20MQUXXTC	TXP2434FX	TXP2734FX TXP2728FX TXP2730FX TXP2730S	CL21S8 CL21T21 CL21M21 CT21T20MQUXXTC
		29" SDI MST	29" SDI MST	25" SDI MST	25" SDI MST	25" SDI MST	29" SDI MST	21" SDI MST
V Amp	ADJ	4	0	0	0	0	0	0
V Shift	ADJ	-6	-6	-6	-6	-6	-6	-6
H EW	ADJ	0	0	0	0	0	0	0
H Shift	ADJ	-16	-12	-12	-12	-12	-12	-12
V Linearity	ADJ	0	3	3	3	3	3	3
V SC	FIX	0	0	0	0	0	0	0
H Parabola	ADJ	0	0	0	0	0	0	0
Upper Corner	ADJ	0	0	0	0	0	0	0
Lower Corner	ADJ	0	0	0	0	0	0	0
Upper Corner6	ADJ	0	0	0	0	0	0	0
Lower Corner6	ADJ	0	0	0	0	0	0	0
H Trapezium	ADJ	0	0	0	0	0	0	0
Bow	FIX	0	0	0	0	0	0	0
Angle	FIX	0	0	0	0	0	0	0
EHT Time	FIX	20	20	20	20	20	20	20
EHT Threshold	FIX	1	1	1	1	1	1	1
EHT Vertical	FIX	-12	-12	-12	-12	-12	-12	-12
EHT Horizontal	FIX	77	77	77	77	77	77	77
EHT Vertical2	FIX	-10	-10	-10	-10	-10	-10	-10
EHT Horizontal2	FIX	8	8	8	8	8	8	8
Item	Remark	Brazil CL34Z6P	Brazil CL29Z6P CL29M21	Brazil CL21M21 CL21N11				
		34" TSB(USA) MTPD	29" SDI MST	29" SDI MST				
V Amp	ADJ	4	4	4				
V Shift	ADJ	-6	-6	-6				
H EW	ADJ	0	0	0				
H Shift	ADJ	-16	-16	-16				
V Linearity	ADJ	0	0	0				
V SC	FIX	0	0	0				
H Parabola	ADJ	0	0	0				
Upper Corner	ADJ	0	0	0				
Lower Corner	ADJ	0	0	0				
Upper Corner6	ADJ	0	0	0				
Lower Corner6	ADJ	0	0	0				
H Trapezium	ADJ	0	0	0				
Bow	FIX	0	0	0				
Angle	FIX	0	0	0				
EHT Time	FIX	20	20	30				
EHT Threshold	FIX	1	1	10				
EHT Vertical	FIX	2	-12	0				
EHT Horizontal	FIX	30	77	0				
EHT Vertical2	FIX	-17	-10	-50				
EHT Horizontal2	FIX	7	8	0				

Video Adjust 1

Item	Remark	CL29T21 CL29M21 CT29M20MQUXXTC CT29M16MQUXXTC	CT29K10MQUXXTW	CL25M6 CL25M5	CT25M20MQUXXTC	TXP2434FX	TXP2734FX TXP2728FX TXP2730FX TXP2730S	CL21S8 CL21T21 CL21M21 CT21T20MQUXXTC
		29" SDI MST	29" SDI MST	25" SDI MST	25" SDI MST	25" SDI MST	29" SDI MST	21" SDI MST
R Cutoff	ADJ	127	127	127	127	127	127	127
G Cutoff	FIX	127	127	127	127	127	127	127
B Cutoff	ADJ	127	127	127	127	127	127	127
R Drive	ADJ	127	127	127	127	127	127	127
G Drive	FIX	127	127	127	127	127	127	127
B Drive	ADJ	127	127	127	127	127	127	127
Sub Bright	ADJ	60	60	60	60	60	60	60
Sub Contrast	ADJ	49	49	49	49	49	49	49
Sub Color	FIX	0	0	0	0	0	0	0
Sub Tint	FIX	46	46	46	46	46	46	46
AKB Option	FIX	1	1	1	1	1	1	1
BCL Threshold	FIX	24	24	21	21	21	24	20
BCL Gain	FIX	200	200	240	240	240	200	240
BCL Time	FIX	100	100	230	230	230	100	230
Sub Sharpness	FIX	10	10	15	15	15	10	15
Pilot Low	FIX	25	25	25	25	25	25	25
Pilot High	FIX	45	45	45	45	45	45	45
V-Mute(x100ms)	FIX	3	3	3	3	3	3	3
BCL TCUP	FIX	65	-	65	65	65	65	65
Item	Remark	Brazil CL34Z6P	Brazil CL29Z6P CL29M21	Brazil CL21M21 CL21N11				
		34" TSB(USA) MTPD	29" SDI MST	29" SDI MST				
R Cutoff	ADJ	127	127	127				
G Cutoff	FIX	127	127	127				
B Cutoff	ADJ	127	127	127				
R Drive	ADJ	127	127	127				
G Drive	FIX	127	127	127				
B Drive	ADJ	127	127	127				
Sub Bright	ADJ	60	60	60				
Sub Contrast	ADJ	49	49	49				
Sub Color	FIX	0	0	0				
Sub Tint	FIX	46	46	46				
AKB Option	FIX	1	1	1				
BCL Threshold	FIX	28	24	21				
BCL Gain	FIX	200	200	200				
BCL Time	FIX	100	100	100				
Sub Sharpness	FIX	10	10	10				
Pilot Low	FIX	25	25	25				
Pilot High	FIX	45	45	45				
V-Mute(x100ms)	FIX	3	3	3				
BCL TCUP	FIX	65	65	65				

Video Adjust 2

Item	Remark	CL29T21 CL29M21 CT29M20MQUXXTC CT29M16MQUXXTC	CT29K10MQUXXTW	CL25M6 CL25M5	CT25M20MQUXXTC	TXP2434FX	TXP2734FX TXP2728FX TXP2730FX TXP2730S	CL21S8 CL21T21 CL21M21 CT21T20MQUXXTC
		29" SDI MST	29" SDI MST	25" SDI MST	25" SDI MST	25" SDI MST	29" SDI MST	21" SDI MST
VSU	FIX	2	2	2	2	2	2	2
Melody Volume	FIX	5	5	5	5	5	5	5
HB Start	FIX	159	159	159	159	159	159	159
HB Stop	FIX	149	149	149	149	149	149	149
RF AGC	FIX	1	1	1	1	1	1	1
VM Gain	FIX	7	7	0	0	0	6	0
VM Delay	FIX	7	7	4	4	4	4	4
V Peaking	FIX	12	12	12	12	12	12	12
BLE Tilt	FIX	7	7	7	7	7	7	7
BLE Gain	FIX	2	2	2	2	2	1	2
BLE Mode	FIX	2	2	2	2	2	2	2
BLE Break	FIX	1	1	1	1	1	1	1
CTI Gain	FIX	1	1	1	1	10	10	1
CTI Coring	FIX	15	15	15	15	5	5	15
LTI Gain	FIX	15	15	15	15	15	15	15
D-EHT Time	FIX	5	5	5	5	5	5	6
DCT Ratio	FIX	50	50	50	50	50	50	50
VSP COMB	FIX	3	3	3	3	3	3	3

Item	Remark	Brazil CL34Z6P	Brazil CL29Z6P CL29M21	Brazil CL21M21 CL21N11				
		34" TSB(USA) MTPD	29" SDI MST	29" SDI MST				
VSU	FIX	2	2	2				
Melody Volume	FIX	5	5	5				
HB Start	FIX	159	159	159				
HB Stop	FIX	149	149	120				
RF AGC	FIX	1	1	1				
VM Gain	FIX	7	7	7				
VM Delay	FIX	7	7	7				
V Peaking	FIX	12	12	12				
BLE Tilt	FIX	7	7	7				
BLE Gain	FIX	2	2	2				
BLE Mode	FIX	2	2	2				
BLE Break	FIX	1	1	1				
CTI Gain	FIX	1	1	1				
CTI Coring	FIX	15	15	15				
LTI Gain	FIX	15	15	15				
D-EHT Time	FIX	5	5	5				
DCT Ratio	FIX	50	50	50				
VSP COMB	FIX	3	3	3				

Video Adjust 3

Item	Remark	CL29T21 CL29M21 CT29M20MQUXXTC CT29M16MQUXXTC	CT29K10MQUXXTW	CL25M6 CL25M5	CT25M20MQUXXTC	TXP2434FX	TXP2734FX TXP2728FX TXP2730FX TXP2730S	CL21S8 CL21T21 CL21M21 CT21T20MQUXXTC
		29" SDI MST	29" SDI MST	25" SDI MST	25" SDI MST	25" SDI MST	29" SDI MST	21" SDI MST
NR Off Value	FIX	3	3	3	3	3	3	3
Gamma Mode	FIX	1	1	1	1	1	1	1
Gamma Correction	FIX	50	50	60	60	60	30	50
BST StartPoint	FIX	145	145	145	145	145	145	145
BST Gain(B)	FIX	50	50	50	50	50	50	50
DPWL Gain	FIX	80	80	80	80	80	80	80
DPWL Start	FIX	155	155	155	155	155	155	155
PIP Contrast	FIX	15	15	10	10	10	10	15
PIP Tint	FIX	63	63	63	63	63	63	63
PIP Color	FIX	5	5	7	7	7	7	5
PIP PAL V.Pos	FIX	24	24	24	24	24	24	24
PIP NTSC V.Pos	FIX	23	23	23	23	23	23	23
PIP H.Pos	FIX	39	39	39	39	39	39	39
PIP R Cutoff	FIX	2	2	4	4	4	4	2
PIP B Cutoff	FIX	1	1	5	5	5	5	1
PIP R Drive	FIX	170	170	168	168	168	168	170
PIP B Drive	FIX	190	190	212	212	212	212	190

Item	Remark	Brazil CL34Z6P	Brazil CL29Z6P CL29M21	Brazil CL21M21 CL21N11				
		34" TSB(USA) MTPD	29" SDI MST	29" SDI MST				
NR Off Value	FIX	3	3	3				
Gamma Mode	FIX	1	1	1				
Gamma Correction	FIX	50	50	50				
BST StartPoint	FIX	145	145	145				
BST Gain(B)	FIX	50	50	50				
DPWL Gain	FIX	80	80	80				
DPWL Start	FIX	155	155	155				
PIP Contrast	FIX	15	15	15				
PIP Tint	FIX	63	63	63				
PIP Color	FIX	5	5	5				
PIP PAL V.Pos	FIX	24	24	24				
PIP NTSC V.Pos	FIX	23	23	23				
PIP H.Pos	FIX	39	39	39				
PIP R Cutoff	FIX	2	2	2				
PIP B Cutoff	FIX	1	1	1				
PIP R Drive	FIX	170	170	170				
PIP B Drive	FIX	190	190	190				

YC DELAY

Item	Remark	CL29T21 CL29M21 CT29M20MQUXXTC CT29M16MQUXXTC	CT29K10MQUXXTW	CL25M6 CL25M5	CT25M20MQUXXTC	TXP2434FX	TXP2734FX TXP2728FX TXP2730FX TXP2730S	CL21S8 CL21T21 CL21M21 CT21T20MQUXXTC
		29" SDI MST	29" SDI MST	25" SDI MST	25" SDI MST	25" SDI MST	29" SDI MST	21" SDI MST
PAL Delay	FIX	0	0	0	0	0	0	0
SECAM Delay	FIX	-2	-2	-2	-2	-2	-2	-2
NTSC Delay	FIX	-3	-3	-3	-3	-3	-3	-3
PAL(AV) Delay	FIX	-1	-1	-1	-1	-1	-1	-1
SECAM(AV) Delay	FIX	-3	-3	-3	-3	-3	-3	-3
NTSC(AV) Delay	FIX	-4	-4	-4	-4	-4	-4	-4
Item	Remark	Brazil CL34Z6P	Brazil CL29Z6P CL29M21	Brazil CL21M21 CL21N11				
		34" TSB(USA) MTPD	29" SDI MST	29" SDI MST				
PAL Delay	FIX	0	0	0				
SECAM Delay	FIX	-2	-2	-2				
NTSC Delay	FIX	-3	-3	-3				
PAL(AV) Delay	FIX	-1	-1	-1				
SECAM(AV) Delay	FIX	-3	-3	-3				
NTSC(AV) Delay	FIX	0	0	0				

Test Pattern

Item	Remark	CL29T21 CL29M21 CT29M20MQUXXTC CT29M16MQUXXTC	CT29K10MQUXXTW	CL25M6 CL25M5	CT25M20MQUXXTC	TXP2434FX	TXP2734FX TXP2728FX TXP2730FX TXP2730S	CL21S8 CL21T21 CL21M21 CT21T20MQUXXTC
		29" SDI MST	29" SDI MST	25" SDI MST	25" SDI MST	25" SDI MST	29" SDI MST	21" SDI MST
Test Pattern	FIX	0	0	0	0	0	0	0
Item	Remark	Brazil CL34Z6P	Brazil CL29Z6P CL29M21	Brazil CL21M21 CL21N11				
		34" TSB(USA) MTPD	29" SDI MST	29" SDI MST				
Test Pattern	FIX	0	0	0				

Option Byte

Item	TXP2734FXXAA TXP2730FXXAA TXP2730S/XAA	TXP2434FXXAA	TXP2728X/XAC TXP2730FXXAC TXP2734FXXAC	CL29M16 CL29K5 CL29M5	CL29M21 CL29T21	CL25M6	CT25M20MQUX XTC	CL21S8	CT21T20MQUX XTC
1.System	CT-N	CT-N	CT-N	CL	CL	CL	CL	CL	CL
2.Sound	Stereo	Stereo	Stereo	Stereo	Stereo	Stereo	Stereo	Stereo	Stereo
2.ACS	-	-	-	-	-	-	-	-	-
3.AV Jack	2RCA+S+DVD	2RCA+S+DVD	2RCA+S+DVD	2RCA+S+DVD	2RCA+S+DVD	2RCA+S+DVD	2RCA+S+DVD	2RCA+DVD	2RCA+DVD
4.Tilt	On	Off	On	On	On	Off	Off	Off	Off
5.Vchip	USA	USA	USA+CANADA	Off	Off	Off	Off	Off	Off
6.Caption	On	On	On	On	On	On	On	On	On
7.PIP	Off	Off	Off	Off	2-Tuner	Off	Off	Off	Off
8.LNA	Off	Off	Off	Off	ON	Off	Off	Off	Off
9.Auto On	Off	Off	Off	Off	Off	Off	Off	Off	Off
10.StandBy LED	Off	Off	Off	Off	Off	Off	Off	Off	Off
11.A/V Multi	-	-	-	-	-	-	-	-	-
11.Philippines	Off	Off	Off	Off	Off	Off	On	Off	ON
12.Osd Language	English	English	English	English	English	English	English	English	English
13.FM Radio	Off	Off	Off	Off	Off	Off	Off	Off	Off
14.Antenna Disp	Off	Off	Off	Off	Off	Off	Off	Off	Off
15.Hi-Deviation	Off	Off	Off	Off	Off	Off	Off	Off	Off
16.Plug & Plat	On	On	On	On	On	On	On	On	On
17.DNIe Jr	Off	Off	Off	Off	On	Off	On	Off	On
18.Volume Curve	Small	Small	Small	Small	Small	Small	Small	Small	Small
19.Color Matrix	Japan	Japan	Japan	Japan	Japan	Japan	Japan	Japan	Japan
20.PWM/Parabola	Parabola	Parabola	Parabola	Parabola	Parabola	Parabola	Parabola	Parabola	Parabola
21.Hotel mode	-	-	-	-	-	-	-	-	-
22. Child Lock	-	-	-	-	-	-	-	-	-
23. Air/Cable On	-	-	-	-	-	-	-	-	-
Item	CL21T21 CL21M21	CT29K10MQUX XTW	CT29M20MQUX XTC	CT29M16MQUX XTC	Brazil CL34Z6P CL29Z6P	Brazil CL29M21	Brazil CL21M21	Brazil CL21N11	
1.System	CL	CT-N	CL	CL	CL	CL	CL	CL	
2.Sound	Stereo	-	Stereo	Stereo					
2.ACS	-	ON	-	-	Off	Off	Off	Off	
3.AV Jack	2RCA+DVD	2RCA+S+DVD	2RCA+S+DVD	2RCA+S+DVD	2RCA+S+DVD	2RCA+S+DVD	2RCA+DVD	2RCA+DVD	
4.Tilt	Off	On	On	On	On	On	Off	Off	
5.Vchip	Off	Off	Off	Off	Off	Off	Off	Off	
6.Caption	On	On	On	On	On	On	On	On	
7.PIP	1-Tuner	Off	Off	Off	2-Tuner	Off	1-Tuner	Off	
8.LNA	0ff	Off	Off	Off	ON	Off	Off	Off	
9.Auto On	Off	ON	Off	Off	Off	Off	Off	Off	
10.StandBy LED	Off	ON	Off	Off	Off	Off	Off	Off	
11.A/V Multi	-	-	-	-	-	-	-	-	
11.Philippines	Off	Off	ON	ON	Off	Off	Off	Off	
12.Osd Language	English	English	English	English	English	English	English	English	
13.FM Radio	Off	Off	Off	Off	Off	Off	Off	Off	
14.Antenna Disp	Off	Off	Off	Off	Off	Off	Off	Off	
15.Hi-Deviation	off	Off	Off	Off	Off	Off	Off	Off	
16.Plug & Plat	On	On	On	On	On	On	On	On	
17.DNIe Jr	On	Off	On	Off	On	On	On	On	
18.Volume Curve	Small	Small	Small	Small	Small	Small	Small	Small	
19.Color Matrix	Japan	Japan	Japan	Japan	Japan	Japan	Japan	Japan	
20.PWM/Parabola	Parabola	Parabola	Parabola	Parabola	Parabola	Parabola	Parabola	Parabola	
21.Hotel mode	-	-	-	-	Off	Off	Off	Off	
22. Child Lock	-	-	-	-	On	On	On	On	
23. Air/Cable On	-	-	-	-	On	On	On	On	

G2 Adjust

Item	Remark	CL29T21 CL29M21 CT29M20MQUXXTC CT29M16MQUXXTC	CT29K10MQUXXTW	CL25M6 CL25M5	CT25M20MQUXXTC	TXP2434FX	TXP2734FX TXP2728FX TXP2730FX TXP2730S	CL21S8 CL21T21 CL21M21 CT21T20MQUXXTC
		29" SDI MST	29" SDI MST	25" SDI MST	25" SDI MST	25" SDI MST	29" SDI MST	21" SDI MST
Read Cut	-							
Read Dri	-							
IBRM	FIX	175	175	190	190	190	175	175
WDRM	FIX	75	75	75	75	75	75	75
CDL	FIX	255	255	255	255	255	255	255
COLR G B	FIX	105 / 105 / 105	105 / 105 / 105	105 / 105 / 105	105 / 105 / 105	105 / 105 / 105	105 / 105 / 105	105 / 105 / 105
Item	Remark	Brazil CL34Z6P	Brazil CL29Z6P CL29M21	Brazil CL21M21 CL21N11				
		34" TSB(USA) MTPD	29" SDI MST	29" SDI MST				
Read Cut	-							
Read Dri	-							
IBRM	FIX	175	175	175				
WDRM	FIX	75	75	75				
CDL	FIX	255	255	255				
COLR G B	FIX	105 / 105 / 105	105 / 105 / 105	105 / 105 / 105				

White Balance

Item	Remark	CL29T21 CL29M21 CT29M20MQUXXTC CT29M16MQUXXTC	CT29K10MQUXXTW	CL25M6 CL25M5	CT25M20MQUXXTC	TXP2434FX	TXP2734FX TXP2728FX TXP2730FX TXP2730S	CL21S8 CL21T21 CL21M21 CT21T20MQUXXTC
		29" SDI MST	29" SDI MST	25" SDI MST	25" SDI MST	25" SDI MST	29" SDI MST	21" SDI MST
H	-	275/275/37	275/275/37	275/275/45	275/275/45	295/295/45	295/295/37	275/275/55
L	-	265/265/2.0	265/265/2.0	265/265/2.5	265/265/2.5	295/295/2.5	295/295/2.0	265/265/2.5
Item	Remark	Brazil CL34Z6P	Brazil CL29Z6P CL29M21	Brazil CL21M21 CL21N11				
		34" TSB(USA) MTPD	29" SDI MST	29" SDI MST				
H	-	275/275/37	275/275/37	275/275/55				
L	-	265/265/2.0	265/265/2.0	265/265/2.5				

EEPROM

No	Factory Control	Remark	MIN	MAX	25", 29" America	21", 25", 29" South Central	21", 29" XTC	29" XTW	21", 29", 34" XAZ
0	Dynamic Contrast	FIX	0	255	100	100	100	100	100
1	Dynamic Brightness	FIX	0	255	45	45	45	45	45
2	Dynamic Sharpness	FIX	0	255	75	80	80	80	50
3	Dynamic Color	FIX	0	255	38	43	43	43	40
4	Dynamic Tint	FIX	0	255	50	50	50	50	50
5	Standard Contrast	FIX	0	255	82	80	80	80	80
6	Standard Brightness	FIX	0	255	45	45	45	45	45
7	Standard Sharpness	FIX	0	255	50	50	50	50	50
8	Standard Color	FIX	0	255	45	43	43	43	40
9	Standard Tint	FIX	0	255	50	50	50	50	50
10	Movie Contrast	FIX	0	255	50	50	50	50	50
11	Movie Brightness	FIX	0	255	55	55	55	55	55
12	Movie Sharpness	FIX	0	255	25	25	25	25	25
13	Movie Color	FIX	0	255	40	40	40	40	40
14	Movie Tint	FIX	0	255	50	50	50	50	50
15									
16									
17									
18									
19	DVD SUB TINT	FIX	0		1	15	15	15	15
20	16:9 V-SHIFT	FIX	0	100	15	15	15	15	15
21	16:9 PARAVOLA	FIX	0	100	5	5	5	5	5
22	PIP BRIGHTNESS	FIX	0	15	0	0	0	0	0
23	Double TTX Contrast	FIX			255	255	255	255	255
24	TTX V Position	FIX	0	255	255	255	255	255	255
25	TTX H Position	FIX	0	255	255	255	255	255	255
26	TTX Contrast	FIX	0	255	255	255	255	255	255
27	TTX Brightness	FIX	0	255	255	255	255	255	255
28	OSD Contrast	FIX	0	255	90	90	90	90	90
29	OSD Brightness	FIX	0	255	13	13	13	13	13
30	Double TTX H Position	FIX	0	255	255	255	255	255	255
31	Standard Equ100(Std BASS)	FIX	0	8	50	50	50	50	50
32	Standard Equ300(Std TREBLE)	FIX	0	13	50	50	50	50	50
33	Standard Equ1K(Music BASS)	FIX	0	14	85	85	85	85	85
34	Standard Equ3K(Music TREBLE)	FIX	0	13	70	70	70	70	70
35	Standard 10K(Movie BASS)	FIX	0	12	95	95	95	95	95
36	Music Equ100(Movie TREBLE)	FIX	0	18	50	50	50	50	50
37	Music Equ300(Speech BASS)	FIX	0	14	40	40	40	40	40
38	Music Equ1K(Speech TREBLE)	FIX	0	11	50	50	50	50	50
39	Music Equ3K	FIX	0	14	255	255	255	255	255
40	Music 10K	FIX	0	18	255	255	255	255	255
41	Movie Equ100	FIX	0	22	255	255	255	255	255
42	Movie Equ300	FIX	0	15	255	255	255	255	255
43	Movie Equ1K	FIX	0	11	255	255	255	255	255
44	Movie Equ3K	FIX	0	12	255	255	255	255	255

No	Factory Control	Remark	MIN	MAX	25", 29" America	21", 25", 29" South Central	21", 29" XTC	29" XTW	21", 29", 34" XAZ
45	Movie 10K	FIX	0	13	255	255	255	255	255
46	Speech Equ100	FIX	0	6	255	255	255	255	255
47	Speech Equ300	FIX	0	11	255	255	255	255	255
48	Speech Equ1K	FIX	0	14	255	255	255	255	255
49	Speech Equ3K	FIX	0	13	255	255	255	255	255
50	Speech 10K	FIX	0	11	255	255	255	255	255
51	Brightness(RGB/DVD)	FIX	0	255	6	6	6	6	6
52	Contrast(RGB/DVD)	FIX	0	63	35	35	35	35	35
53	U Saturation(RGB/DVD)	FIX	0	63	44	44	44	44	44
54	V saturation(RGB/DVD)	FIX	0	63	43	43	43	43	43
55	V/FBL Delay	FIX	0	255	85	85	85	85	85
56	CrCb Delay	FIX	0	255	84	84	84	84	84
57	d/w h-position	FIX	0	255	255	255	255	255	255
58	d/w -blanking 1	FIX	0	255	255	255	255	255	255
59	d/w -blanking 2	FIX	0	255	255	255	255	255	255
60	PIP G CUTOFF	FIX	0	255	4	1	4	4	1
61	PIP G DRIVE	FIX	0	255	170	170	170	170	170
62	OSD/PIP BRIGHT BALANCE	FIX	0	31	31	31	31	31	31
63	PIP BRIGHT OFFSET	FIX	0	255	85	210	85	85	205
64	MDB_STRENGTH	FIX	0	127	68	68	68	68	68
65	MDB_HARMONIC	FIX	0	127	37	37	37	37	37
66	MDB_HP	FIX	0	30	9	9	9	9	9
67	MDB_LP	FIX	0	30	11	11	11	11	11
68	MDB_LIM	FIX	0	255	252	252	252	252	252
69	MDB_CUTOFF	FIX	0	40	12	12	12	12	12
70	EHT POSITION 1	FIX	0	255	5	5	5	5	5
71	EHT POSITION 2	FIX	0	255	249	249	249	249	249
72	3.4CH SLLTHD (TV-NO NOISE)	FIX	0	3	1	1	1	2	2
73	other CH SLLTHD (TV-NO NOISE)	FIX	0	3	1	1	1	2	2
74	LNA Operating Point	FIX	0	255	166	166	166	166	166
75	SLLTHDV(TV NO NOISE)	FIX	0	6	0	0	0	6	7
76	LNA Default	FIX	0	1	0	0	0	0	0
77	LNA SWITCH	FIX	0	1	0	0	0	0	0
78	LMIXOFS	FIX	0	13	13	13	13	13	13
79	CR_AMP_TH Setting	FIX	0	255	-	-	-	16	-
79	H-OUTDEL	FIX	0	255	72	72	72		74
80	H-OUTDEL	FIX	0	255	-	-	-	72	-
80	CR-P Initial	FIX	0	7	4	4	4		3
81	CR-I Initial	FIX	0	7	3	3	3	255	2
82	DRX_CR_AMP_TH	FIX	0	255	32	32	32	255	48
83	Over Modulation Return Counter	FIX	0	255	100	100	100	255	100
84	VCR Mode Counter	FIX	0	255	5	5	5	255	5
85	VID_AMP_HEAD_BS (In the modulation)	FIX	0	255	40	40	40	255	40

No	Factory Control	Remark	MIN	MAX	25", 29" America	21", 25", 29" South Central	21", 29" XTC	29" XTW	21", 29", 34" XAZ
86	CR_P (In the Over Modulation)	FIX	0	7	4	4	4	255	2
87	THRSEL (picture shaking when weak signal)	FIX	0	1	0	0	0	255	1
88	SLLTHDVP	FIX	0	1	1	1	1	255	0
89	SLLTHD_CATV	FIX	0	7	255	255	255	255	1

2-7 Screen Change (I2C Bus Geometric Adjustment)

1 V SHIFT

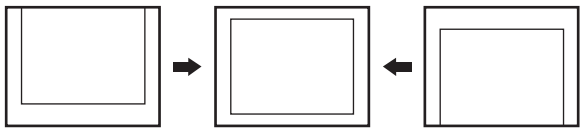

2 V AMP

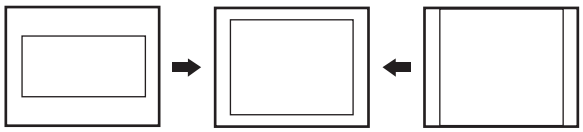

3 V SLOPE

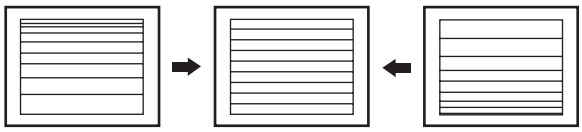

4 V SC

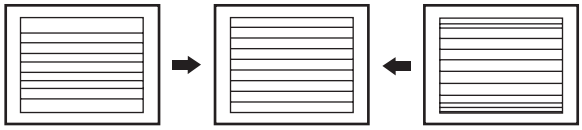

5 H-EW

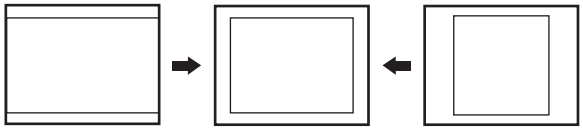

6 H TRAPIZIUM

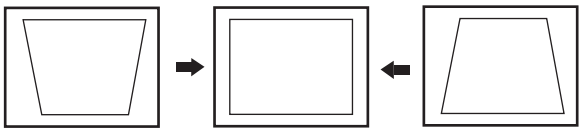

7 H PARABOLA

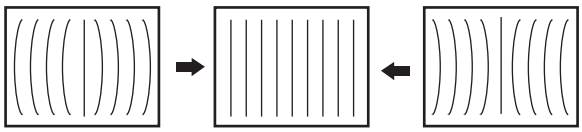

8 H Symmetry

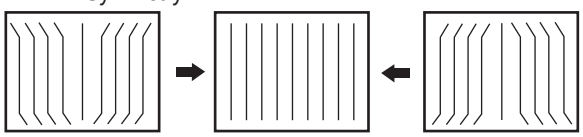

9 H Corner

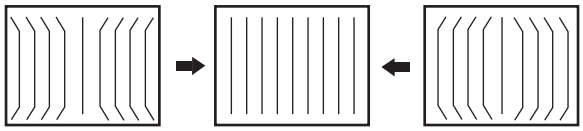

10 H SHIFT

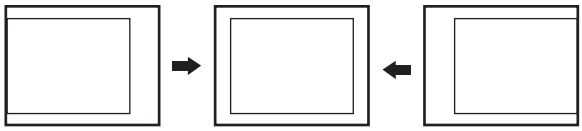

2-8 Pin Connections and Short Descriptions

Pin No.	Pin Name	Type	Connection (If not used)	Short Description
1	GND	SUPPLY	OBL	Ground Platform
2	VSUP5.0BE	SUPPLY	OBL	Supply Voltage Analog Video Back-end, 5.0 V
3	TEST	IN	GND	Test Input, reserved for Test
4	VERT +	OUT	GND	Differential Vertical Sawtooth Output
5	VERT -	OUT	GND	Differential Vertical Sawtooth Output
6	EW	OUT	GND	Vertical Parabola Output
7	RSW2	OUT	LV	Range Switch 2 Output
8	RSW1	OUT	LV	Range Switch 1 Output
9	SENSE	IN	GND	Sense ADC Input
10	GNDM	IN	GND	Reference Ground for Sense ADC
11	FBIN	IN	GND	Fast Blank Input, Back-end
12	RIN	IN	GND	Analog Red Input, Back-end
13	GIN	IN	GND	Analog Green Input, Back-end
14	BIN	IN	GND	Analog Blue Input, Back-end
15	SVMOUT	OUT	VSUP5.0BE	Scan Velocity Modulation Output
16	ROUT	OUT	VSUP5.0BE	Analog Red Output
17	GOUT	OUT	VSUP5.0BE	Analog Green Output
18	BOUT	OUT	VSUP5.0BE	Analog Blue Output
19	VRD		OBL	Reference Voltage for RGB DACs
20	XREF		OBL	Reference Current for RGB DACs
21	VSUP3.3BE	SUPPLY	OBL	Supply Voltage Analog Video Back-end, 3.3 V
22	GND	SUPPLY	OBL	Ground Platform
23	GND	SUPPLY	OBL	Ground Platform
24	VSUP3.3IO	SUPPLY	OBL	Supply Voltage I/O Ports, 3.3 V (main and standby supply)
25	VSUP3.3DAC	SUPPLY	OBL	Supply Voltage Video DACs, 3.3 V
26	GNDDAC	SUPPLY	OBL	Ground Video DACs
27	SAFETY	IN	GND	Safety Input
28	HFLB	IN	HOUT	Horizontal Flyback Input
29	HOUT	OUT	LV	Horizontal Drive Output
30	VPROT	IN	GND	Vertical Protection Input
	PWMV	OUT	LV	PWM Vertical Output
	DFVBL	OUT	LV	Dynamic Focus Vertical Blanking Output
31	SDA	IN/OUT	OBL	I2C Bus Data Input/Output

Pin No.	Pin Name	Type	Connection (If not used)	Short Description
32	SCL	IN/OUT	OBL	I2C Bus Clock Input/Output
33	P21	IN/OUT	LV	Port 2, Bit 1 Input/Output
34	P20	IN/OUT	LV	Port 2, Bit 0 Input/Output
35	P17	IN/OUT	LV	Port 1, Bit 7 Input/Output
36	P16	IN/OUT	LV	Port 1, Bit 6 Input/Output
37	P15	IN/OUT	LV	Port 1, Bit 5 Input/Output
38	P14	IN/OUT	LV	Port 1, Bit 4 Input/Output
39	P13	IN/OUT	LV	Port 1, Bit 3 Input/Output
40	P12	IN/OUT	LV	Port 1, Bit 2 Input/Output
41	P11	IN/OUT	LV	Port 1, Bit 1 Input/Output
42	P10	IN/OUT	LV	Port 1, Bit 0 Input/Output
43	VSUP3.3FE	SUPPLY	OBL	Supply Voltage Analog Video Front-end, 3.3 V (main and standby supply)
44	GND	SUPPLY	OBL	Ground Platform
45	GND	SUPPLY	OBL	Ground Platform
46	VSUP1.8FE	SUPPLY	OBL	Supply Voltage Analog Video Front-end, 1.8 V (main and standby supply)
47	VOUT3	OUT	LV	Analog Video 3 Output
48	VOUT2	OUT	LV	Analog Video 2 Output
49	VOUT1	OUT	LV	Analog Video 1 Output
50	VIN1	IN	GND	Analog Video 1 Input
51	VIN2	IN	GND	Analog Video 2 Input
52	VIN3	IN	GND	Analog Video 3 Input
53	VIN4	IN	GND	Analog Video 4 Input
54	VIN5	IN	GND	Analog Video 5 Input
55	VIN6	IN	GND	Analog Video 6 Input
56	VIN7	IN	GND	Analog Video 7 Input
57	VIN8	IN	GND	Analog Video 8 Input
58	VIN9	IN	GND	Analog Video 9 Input
59	VIN10	IN	GND	Analog Video 10 Input
60	VIN11	IN	GND	Analog Video 11 Input
61	P23	IN/OUT	LV	Port 2, Bit 3 Input/Output
62	P22	IN/OUT	LV	Port 2, Bit 2 Input/Output
63	XTAL2	OUT	OBL	Analog Crystal Output
64	XTAL1	IN	OBL	Analog Crystal Input

Pin No.	Pin Name	Type	Connection (If not used)	Short Description
65	VSUP1.8DIG	SUPPLY	OBL	Supply Voltage Digital Core, 1.8 V (main and standby supply)
66	GND	SUPPLY	OBL	Ground Platform
67	GND	SUPPLY	OBL	Ground Platform
68	VSUP3.3DIG	SUPPLY	OBL	Supply Voltage Digital Core, 3.3 V
69	VSUP5.0IF	SUPPLY	OBL	Supply Voltage IF ADC, 5.0 V
70	VSUP5.0FE	SUPPLY	OBL	Supply Voltage Analog IF Front-end, 5.0 V
71	RESETQ	IN/OUT	OBL	Reset Input/Output
72	IFIN+	IN	VREF IF	Differential IF Input
73	IFIN-	IN	VREF IF	Differential IF Input
74	VREFIF		OBL	Reference Voltage, IF ADC
75	TAGC	OUT	LV	Tuner AGC Output
76	AIN1R/ SIF	IN/ OUT	GND	Analog Audio 1 Input, Right Analog 2nd Sound IF Output
77	AIN1L	IN	GND	Analog Audio 1 Input, Left
78	AIN2R	IN	GND	Analog Audio 2 Input, Right
79	AIN2L	IN	GND	Analog Audio 2 Input, Left
	AIN3R	IN	GND	Analog Audio 3 Input, Right
	AIN3L	IN	GND	Analog Audio 3 Input, Left
	AOUT2R	OUT	LV	Analog Audio 2 Output, Right
	AOUT2L	OUT	LV	Analog Audio 2 Output, Left
80	AIN3R/ AOUT2R	IN/ OUT	LV	Analog Audio 3 Input, Right Analog Audio 2 Output, Right
81	AIN3L/ AOUT2L	IN/ OUT	LV	Analog Audio 3 Input, Left Analog Audio 2 Output, Left
82	AOUT1R	OUT	LV	Analog Audio 1 Output, Right
83	AOUT1L	OUT	LV	Analog Audio 1 Output, Left
84	SPEAKER R	OUT	LV	Analog Loudspeaker Output, Right
85	SPEAKER L	OUT	LV	Analog Loudspeaker Output, Left
86	VREFAU		OBL	Reference Voltage, Audio
87	VSUP8.0AU	SUPPLY	OBL	Supply Voltage Analog Audio, 8.0 V
88	GND	SUPPLY	OBL	Ground Platform

MEMO

4. Exploded View & Parts List

4-1 CL21M21MQUXXAZ

Yon can search for the updated part code through ITSELF web site.
URL:http://itself.sec.samsung.co.kr

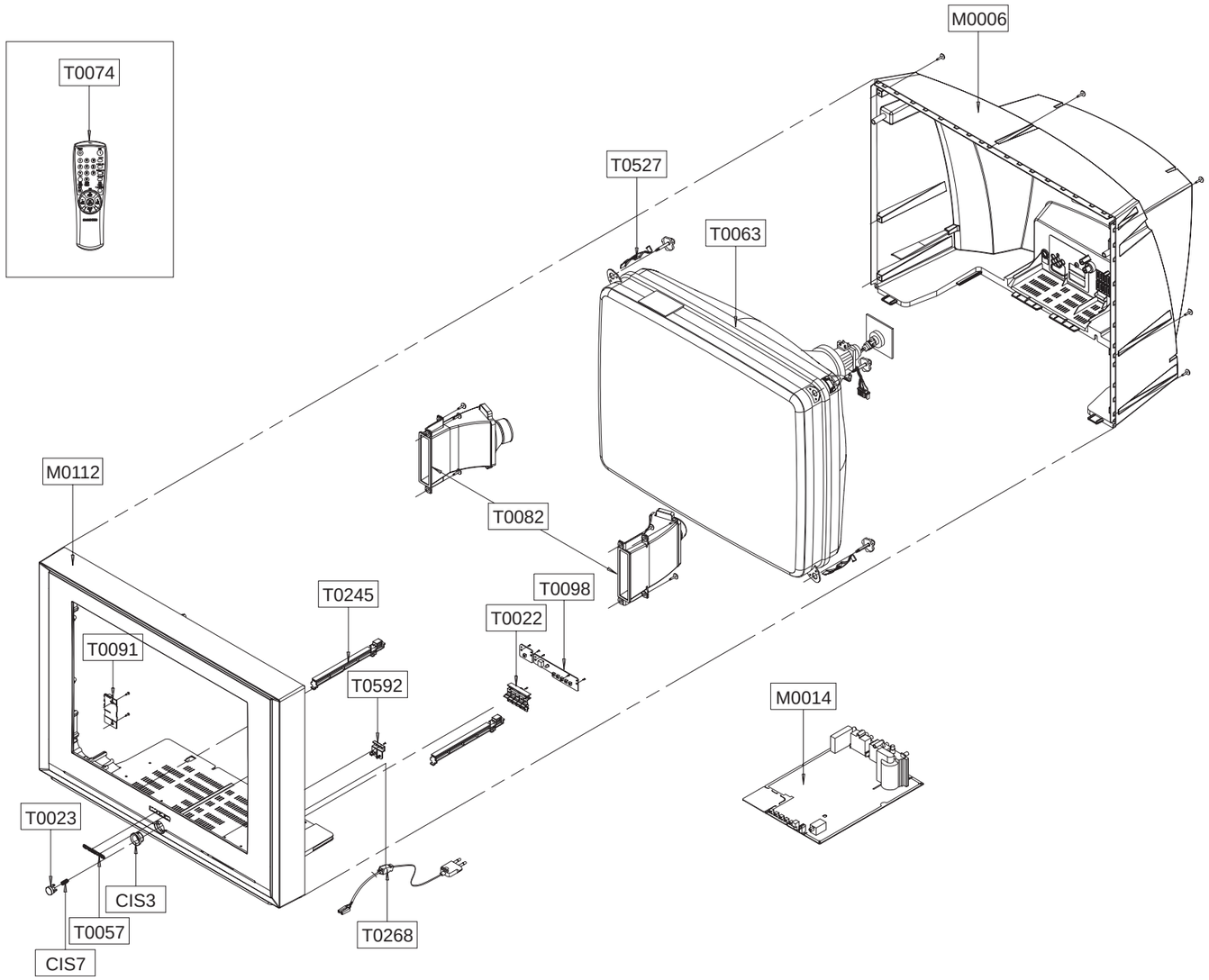

Loc.No.	Code No.	Description;Specification	Q'ty	S.N.A
CIS3	AA64-04151A	KNOB-DECORATION;21,29M21(SEDA),ABS,HB,G3	1	S.N.A
CIS7	AA61-60003J	SPRING ETC-CS;-,SUS304,-,-,OD6,N7,OD6,-,	1	S.N.A
M0014	AA94-14774M	ASSY PCB MAIN;TEST	1	
M0112	AA63-00859B	COVER-FRONT;21M21,NEW,HIPS,HB,G801P+S012	1	
T0082	3001-001005	SPEAKER;10W,8OHM,91DB,140HZ	2	
M0006	AA63-00831A	COVER-REAR;21M21(SEDA),HIPS,HB,G4309	1	
T0022	AA64-04050B	KNOB CONTROL;29M21,ABS,HB,G3676,GR801P	1	S.N.A
T0023	AA64-04150A	KNOB-POWER;21,29M21(SEDA),ABS,HB,G3676,S	1	S.N.A
T0057	AA64-70123A	BADGE-BRAND;NEW,AL,L50,FLAT,SILVER,SAMSU	1	S.N.A
T0063	AA03-00403A	CRT COLOR;A51QDX993X,0MG,1.75MH,18MH,3.1	1	
T0268	AA39-10006X	CBF-POWER CORD;-,KKP419C,KLCE-2F,2.286MT	1	
T0074	AA59-00325E	REMOCON;GOLDRUSH,TM76A,KS7A,52MX,46,G614	1	
T0091	AA94-14616A	ASSY PCB MISC-A/V SIDE;CT21T20MQUX,KS7A	1	
T0098	AA94-14788A	ASSY PCB MISC-TACT S/W,CONTROL;CL29M21MQ	1	
T0245	AA61-00711D	HOLDER-PCB;29U1,U2,HIPS VO,BK502(HB-PROP	2	S.N.A
T0527	AA65-00009B	CLAMPER CORE-D,COIL;21A8,NYLON 66,V0,-,-	4	S.N.A
T0592	AA64-04051A	WINDOW-CONTROL;29M21,PC,CLEAR	1	S.N.A

4-2 CL21N11MQUXXAZ

Yon can search for the updated part code through ITSELF web site.
URL:http://itself.sec.samsung.co.kr

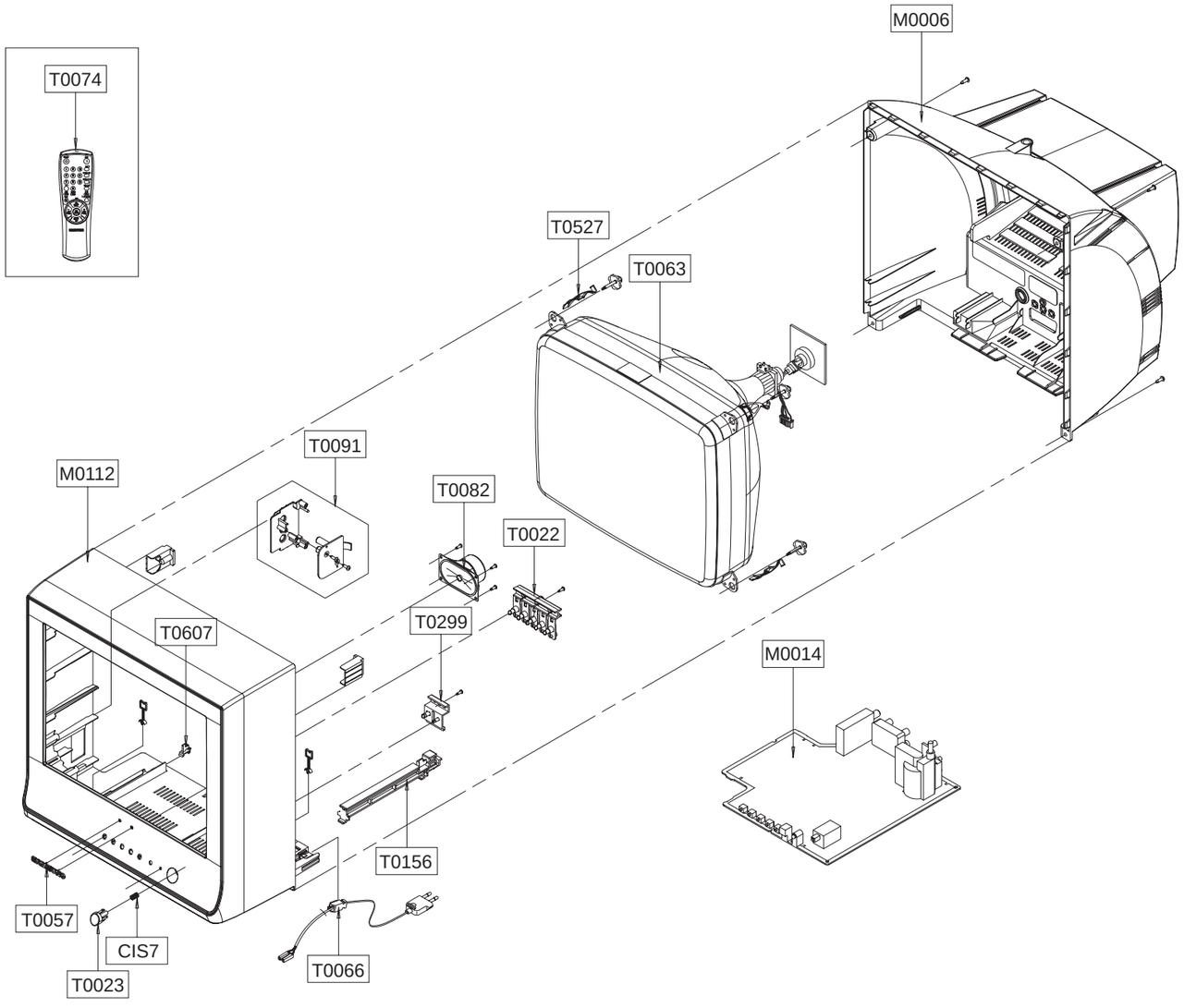

Loc.No.	Code No.	Description;Specification	Q'ty	S.N.A
T0156		HOLDER-RAIL		
T0607	AA61-40113A	STOPPER-PCB;501H,HIPS,-,-,HB,NTR,-	1	S.N.A
T0094	AA61-60003J	SPRING ETC-CS;-,SUS304,-,-,OD6,N7,OD6,-,	1	S.N.A
M0112	AA63-00828B	COVER-FRONT;21N11 330(SEDA),HIPS,G4309,S	1	
T0299	AA64-03652A	WINDOW-RMC LED;17N11,PC,CLEAR	1	S.N.A
T0022	AA64-04139A	KNOB-CONTROL;21N11(SEDA),ABS,HB,G3676,SV	1	S.N.A
T0023	AA64-04138A	KNOB-POWER;21N11(SEDA),ABS,HB,G3676,SVM3	1	S.N.A
T0057	AA64-70123A	BADGE-BRAND;NEW,AL,L50,FLAT,SILVER,SAMSU	1	S.N.A
T0082	3001-001071	SPEAKER;5W,8OHM,90DB,180HZ	2	
M0006	AA63-00829A	COVER-REAR;21N11 330(SEDA),HB,G4309	1	
T0066	AA96-20109C	ASSY POWER CORD;-,CP2/NO(4.0),H/C300,KKP	1	S.N.A
T0063	AA03-00403A	CRT COLOR;A51QDX993X,0MG,1.75MH,18MH,3.1	1	
T0527	AA65-00009B	CLAMPER CORE-D,COIL;21A8,NYLON 66,V0,-,-	4	S.N.A
T0091	AA94-14789A	ASSY PCB MISC-A/V SIDE;CL21N11MQUXXAZ,KS	1	
M0014	AA94-14774E	ASSY PCB MAIN;CL21N11MQUXXAZ,KS7A	1	
T0074	AA59-00316F	REMOCON;GOLDRUSH,TM75,157*55*21,51860P0,	1	

4-3 CL29M21MQUXXAZ

Yon can search for the updated part code through ITSELF web site.
URL:http://itself.sec.samsung.co.kr

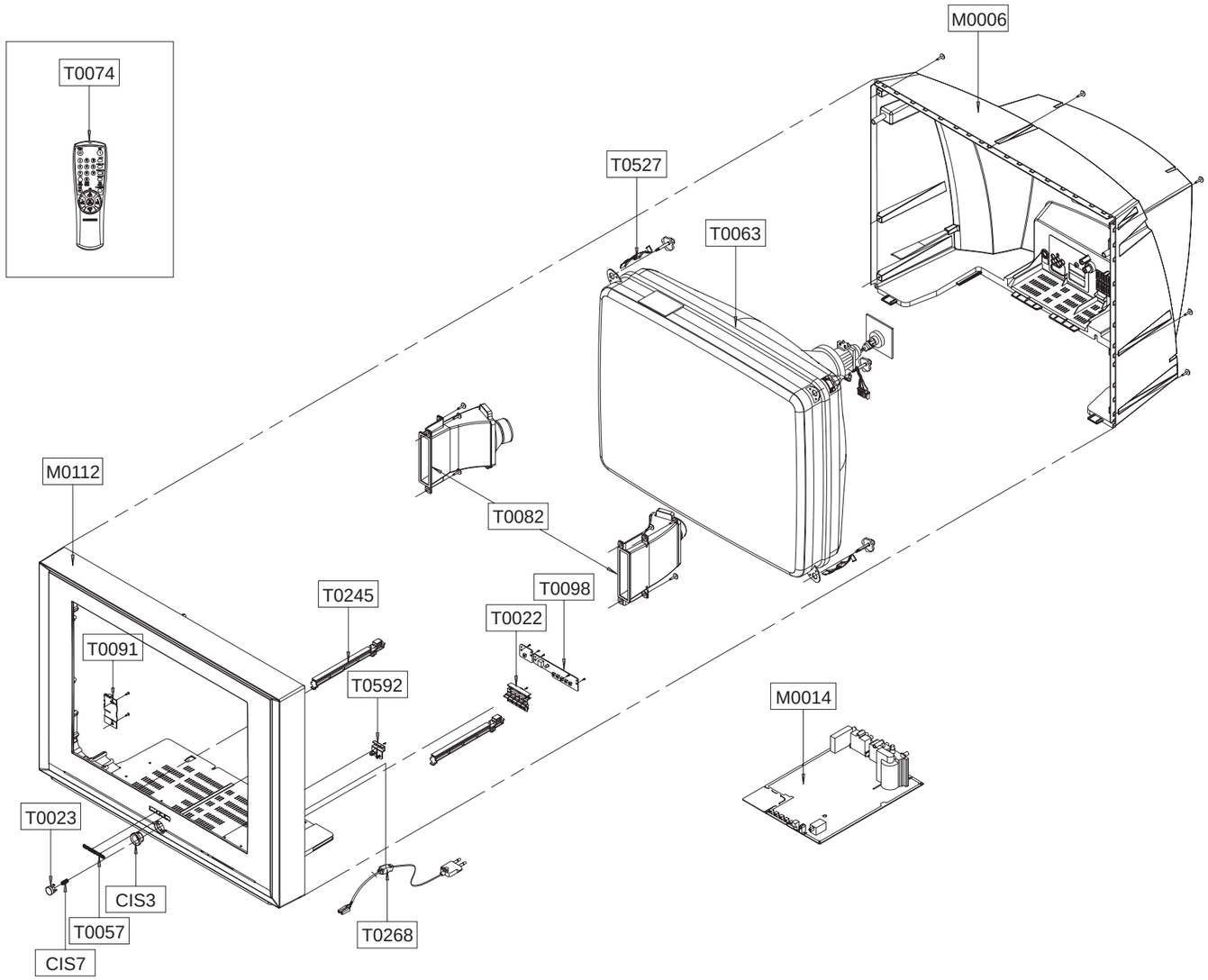

Loc.No.	Code No.	Description;Specification	Q'ty	S.N.A
CIS3	AA64-04151A	KNOB-DECORATION;21,29M21(SEDA),ABS,HB,G3	1	S.N.A
CIS7	AA61-60003J	SPRING ETC-CS;-,SUS304,-,-,OD6,N7,OD6,-,	1	S.N.A
M0014	AA94-14774C	ASSY PCB MAIN;CL29M21MQUXXAZ,KS7A	1	
M0112	AA63-00860B	COVER-FRONT;29M21,NEW,HIPS,HB,G801P+S012	1	
T0082	3001-001005	SPEAKER;10W,8OHM,91DB,140HZ	2	
M0006	AA63-00832A	COVER-REAR;29M21(SEDA),HIPS,HB,G4309	1	
T0022	AA64-04050B	KNOB CONTROL;29M21,ABS,HB,G3676,GR801P	1	S.N.A
T0023	AA64-04150A	KNOB-POWER;21,29M21(SEDA),ABS,HB,G3676,S	1	S.N.A
T0057	AA64-70117B	BADGE-BRAND;,AL,T1.5,10.6,L65,BLK,SILVER	1	S.N.A
T0063	AA03-00400A	CRT COLOR;A68QCP693X500,0MG,1.1MH,14.9MH	1	
T0268	AA39-10006X	CBF-POWER CORD;-,KKP419C,KLCE-2F,2.286MT	1	
T0074	AA59-00325E	REMOCON;GOLDRUSH,TM76A,KS7A,52MX,46,G614	1	
T0091	AA94-13842A	ASSY PCB MISC-A/V SIDE;CT-29K10G,KS7A	1	
T0098	AA94-14788A	ASSY PCB MISC-TACT S/W,CONTROL;CL29M21MQ	1	
T0245	AA61-00711D	HOLDER-PCB;29U1,U2,HIPS VO,BK502(HB-PROP	2	S.N.A
T0527	AA61-01373A	HOLDER-D COIL;29K5,NYLON 66	4	S.N.A
T0592	AA64-04051A	WINDOW-CONTROL;29M21,PC,CLEAR	1	S.N.A

4-4 CL29Z6PQUX/XAZ

Yon can search for the updated part code through ITSELF web site.
URL:http://itself.sec.samsung.co.kr

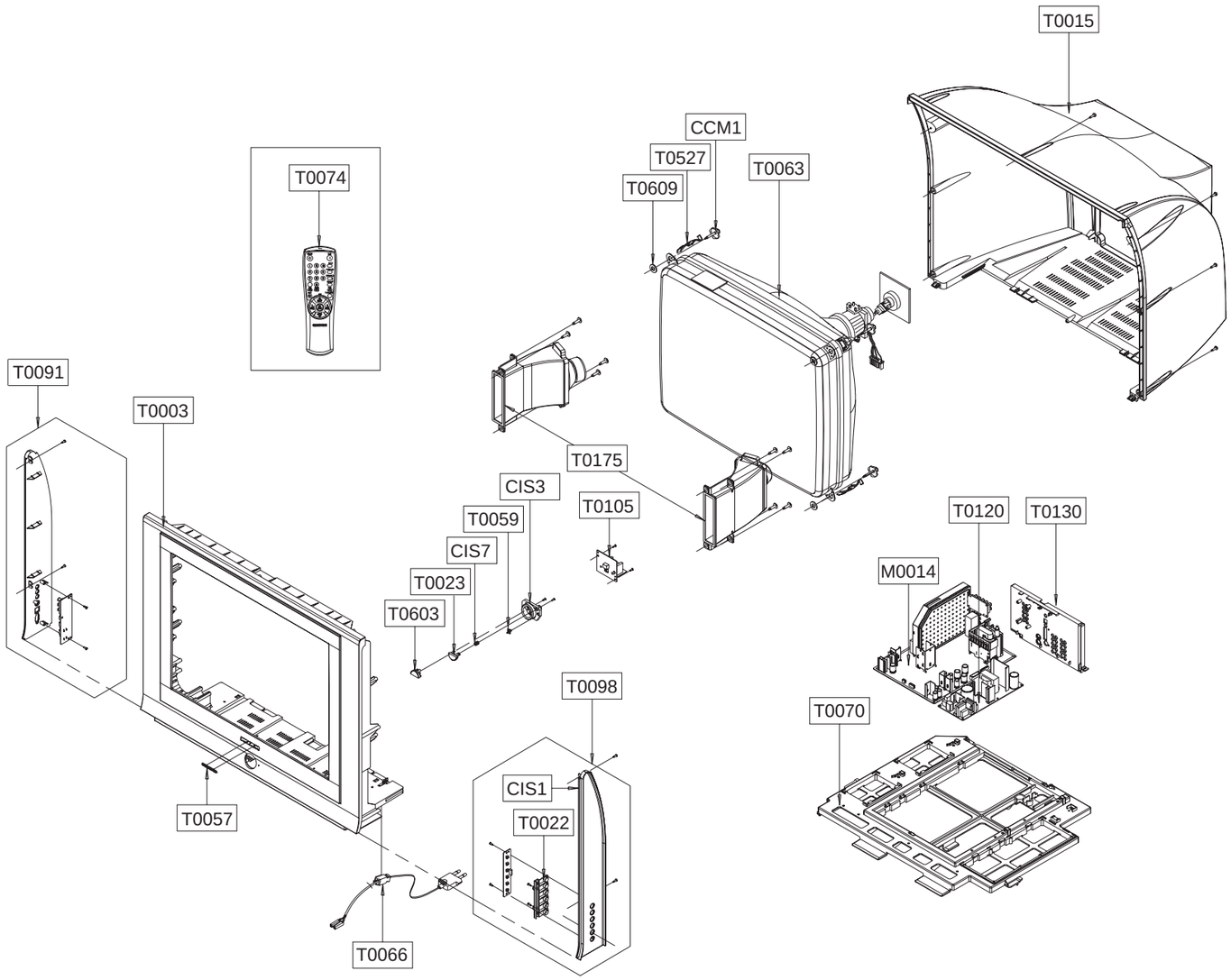

Loc.No.	Code No.	Description;Specification	Q'ty	S.N.A
T0015	AA64-02745G	CABINET BACK;29Z6,HIPS,HB,G4309,SV012P K	1	
CCM1	AA60-10050V	SCREW-MACHINE;-,SWRCH18A,M6,L30,HH,+,WC,	4	S.N.A
T0609	AA63-60004K	SPACER-GUM,CRT;-,NTR RUBBER,-,-,-,BLK,T2	4	S.N.A
T0175	AA96-02408C	ASSY SPEAKER P;8ohm,SEDA,SEMIDOME,15W,90	1	S.N.A
CIS7	AA61-60003J	SPRING ETC-CS;-,SUS304,-,-,OD6,N7,OD6,-,	1	S.N.A
T0003	AA64-02744Y	CABINET FRONT;29Z6,(SEDA),NEW,HIPS,HB,G4	1	
CIS3	AA64-02750A	DECORATION-POWER;29Z6,ABS,HB,GRAY,AL	1	S.N.A
T0023	AA64-02751A	KNOB-POWER;29Z6,PC,VO,VIOLET	1	S.N.A
T0603	AA64-02752A	WINDOW-RMC;29Z6,PC,VO,VIOLET	1	S.N.A
T0059	AA64-02753A	INDICATOR LED;29Z6,ACRYL,HB,CLEAR	1	S.N.A
T0057	AA64-70117B	BADGE-BRAND;,AL,T1.5,10.6,L65,BLK,SILVER	1	S.N.A
T0063	AA03-00400A	CRT COLOR;A68QCP693X500,0MG,1.1MH,14.9MH	1	
T0527	AA61-01373A	HOLDER-D COIL;29K5,NYLON 66	4	S.N.A
T0130	AA96-02477A	ASSY COVER P-TERMINAL BOARD;29Z6,HIPS,V0	1	S.N.A
T0098,T0105	AA94-14776A	ASSY PCB MISC-TACT S/W,CONTROL;CL29Z6PQU	1	
T0091	AA94-14775A	ASSY PCB MISC-A/V SIDE;CL29Z6PQUX/XAZ,KS	1	
M0014,T0120	AA94-14774A	ASSY PCB MAIN;CL29Z6PQUX/XAZ,KS7A,GOLD R	1	
T0074	AA59-00325C	REMOCON;GOLDRUSH,TM76A,200*54*30,52MX,46	1	
T0066	AA96-20109C	ASSY POWER CORD;-,CP2/NO(4.0),H/C300,KKP	1	S.N.A
T0070	AA61-01190A	HOLDER-CHASSIS;Z7,HIPS V0,G4309	1	S.N.A
CIS1	AA63-00569D	COVER-CONTROL;29Z6,HIPS,HB,G4309,DGN-118	1	S.N.A
T0022	AA64-02662A	KNOB-CONTROL;Z7,ABS,HB,G3676,S104M+W971	1	S.N.A

4-5 CL34Z6PQUX/XAZ

Yon can search for the updated part code through ITSELF web site.
URL:http://itself.sec.samsung.co.kr

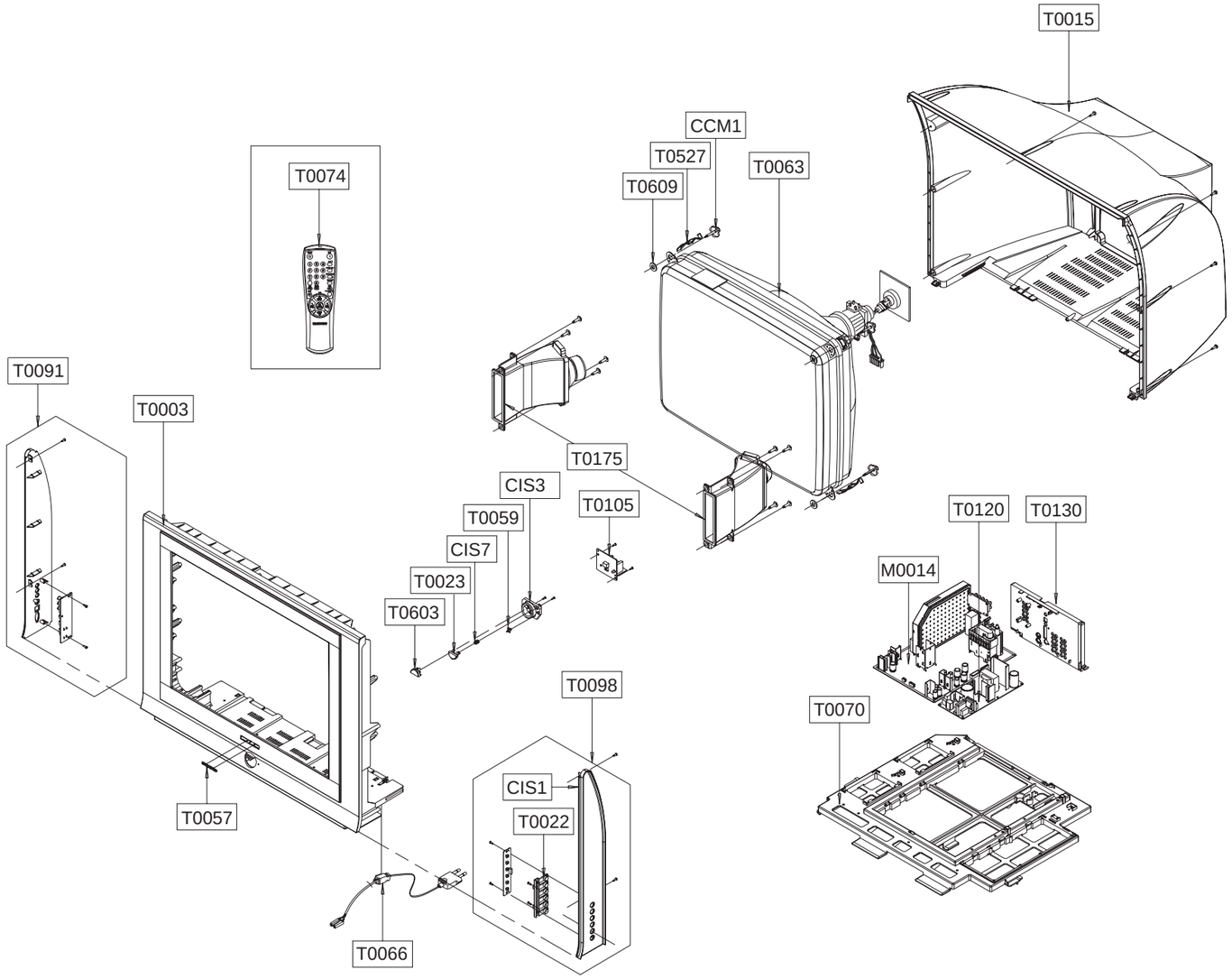

Loc.No.	Code No.	Description;Specification	Q'ty	S.N.A
T0015	AA64-02749F	CABINET BACK;CL34Z6,HIPS,HB,G4309,SV012P	1	
CCM1	AA60-10050V	SCREW-MACHINE;-,SWRCH18A,M6,L30,HH,+,WC,	4	S.N.A
T0609	AA63-60004K	SPACER-GUM,CRT;-,NTR RUBBER,-,-,-,BLK,T2	4	S.N.A
T0175	AA96-02408C	ASSY SPEAKER P;8ohm,SEDA,SEMIDOME,15W,90	1	S.N.A
CIS7	AA61-60003J	SPRING ETC-CS;-,SUS304,-,-,OD6,N7,OD6,-,	1	S.N.A
T0003	AA64-02748U	CABINET FRONT;34Z6,NEW,HIPS,HB,G4309,SV0	1	S.N.A
CIS3	AA64-02750A	DECORATION-POWER;29Z6,ABS,HB,GRAY,AL	1	S.N.A
T0023	AA64-02751A	KNOB-POWER;29Z6,PC,VO,VIOLET	1	S.N.A
T0603	AA64-02752A	WINDOW-RMC;29Z6,PC,VO,VIOLET	1	S.N.A
T0059	AA64-02753A	INDICATOR LED;29Z6,ACRYL,HB,CLEAR	1	S.N.A
T0057	BP64-00177A	BADGE-BRAND;ALL,AL,T1.5,70,11.3,BLK,SILI	1	S.N.A
T0063	AA03-10031V	CRT COLOR;A80AJZ90X06,+380MG,0.89MH,16.5	1	
T0527	AA61-01373A	HOLDER-D COIL;29K5,NYLON 66	4	S.N.A
T0130	AA96-02477A	ASSY COVER P-TERMINAL BOARD;29Z6,HIPS,V0	1	S.N.A
T0098,T0105	AA94-14776B	ASSY PCB MISC-TACT S/W,CONTROL;CL34Z6PQU	1	
T0091	AA94-14775B	ASSY PCB MISC-A/V SIDE;CL34Z6PQUX/XAZ,KS	1	
M0014,T0120	AA94-14774B	ASSY PCB MAIN;CL34Z6PQUX/XAZ,KS7A,GOLD R	1	
T0074	AA59-00325C	REMOCON;GOLDRUSH,TM76A,200*54*30,52MX,46	1	
T0066	AA96-20109C	ASSY POWER CORD;-,CP2/NO(4.0),H/C300,KKP	1	S.N.A
T0070	AA61-01190A	HOLDER-CHASSIS;Z7,HIPS V0,G4309	1	S.N.A
CIS1	AA63-00570D	COVER-CONTROL;34Z6,HIPS,HB,G4309,DGN-118	1	S.N.A
T0022	AA64-02662A	KNOB-CONTROL;Z7,ABS,HB,G3676,S104M+W971	1	S.N.A

Yon can search for the updated part code through ITSELF web site.
URL:http://itself.sec.samsung.co.kr

5. Electrical Parts List

5-1 CL21M21MQUXXAZ

Level	Loc.No.	Code No.	Description;Specification	Remark
			ASSY COVER FRONT	
1	M0001	AA90-05244M	ASSY COVER FRONT;CL21M21MQUXXAZ	S.N.A
..2	T0081	6003-001026	SCREW-TAPTITE;RH,+,B,M4,L15,ZPC(BLK),SWR	S.N.A
..2	T0081	6003-001026	SCREW-TAPTITE;RH,+,B,M4,L15,ZPC(BLK),SWR	S.N.A
..2	T0081	6003-001268	SCREW-TAPTITE;TH,+,B,M4,L12,ZPC(YEL),SWR	S.N.A
..2	CCM1	AA60-10050R	SCREW-MACHINE;-,SWRCH18A,M5,L31.5,HH,+,W	S.N.A
..2	T0081	AA60-10050T	SCREW-TAPPING;-,SWRCH18A,M4,L20,RH,+,2S,	S.N.A
..2	T0003	AA96-02475E	ASSY COVER P-FRONT;21M21,NEW,SEDA,HIPS,H	S.N.A
...3	T0082	3001-001005	SPEAKER;10W,8OHM,91DB,140HZ	
...3	T0081	6003-001019	SCREW-TAPTITE;RH,+,B,M4,L12,ZPC(BLK),SWR	S.N.A
...3	T0081	6003-001019	SCREW-TAPTITE;RH,+,B,M4,L12,ZPC(BLK),SWR	S.N.A
...3	T0081	6003-001019	SCREW-TAPTITE;RH,+,B,M4,L12,ZPC(BLK),SWR	S.N.A
...3	M2893	AA39-00369B	LEAD CONNECTOR;KS7A/CL29M21,UL1007#22,4P	S.N.A
...3	T0069	AA60-00091G	SPACER-FELT;-,FELT,200X10,-,-,BLK,T0.5,-	S.N.A
...3	T0069	AA60-00091R	SPACER-FELT;,FELT,250X10,,,BLK,T0.5,,	S.N.A
...3	T0245	AA61-00711D	HOLDER-PCB;29U1,U2,HIPS VO,BK502(HB-PROP	S.N.A
...3	CIS7	AA61-60003J	SPRING ETC-CS;-,SUS304,-,-,OD6,N7,OD6,-,	S.N.A
...3	M0112	AA63-00859B	COVER-FRONT;21M21,NEW,HIPS,HB,G801P+S012	
...3	T0022	AA64-04050B	KNOB CONTROL;29M21,ABS,HB,G3676,GR801P	S.N.A
...3	T0592	AA64-04051A	WINDOW-CONTROL;29M21,PC,CLEAR	S.N.A
...3	T0023	AA64-04150A	KNOB-POWER;21,29M21(SEDA),ABS,HB,G3676,S	S.N.A
...3	CIS3	AA64-04151A	KNOB-DECORATION;21,29M21(SEDA),ABS,HB,G3	S.N.A
...3	T0057	AA64-70123A	BADGE-BRAND;NEW,AL,L50,FLAT,SILVER,SAMSU	S.N.A
...3		AA65-00011C	CLAMPER CORE-WIRE;ALL MODEL,NYLON 66,V2,	S.N.A
...3		AA65-30105A	CLAMPER CORE-WIRE;ALL MODEL,NYLON 66,V2,	S.N.A
...3	T0382	BP61-00509C	HOLDER-CARE;PJT,ACRYL-FOAM,T0.25,W20.0mm	S.N.A
..2	T0382	BP61-00495C	HOLDER-CARE;PJT,ACRYL-FOAM,T0.25,W30.0mm	S.N.A
			ASSY COVER REAR	
1	M0002	AA90-05245A	ASSY COVER REAR;21M21,SEDA,HIPS,HB,G4309	S.N.A
..2	T0069	AA60-00091J	SPACER-FELT;-,FELT,330X10,-,-,BLK,T0.5,-	S.N.A
..2	M0006	AA63-00831A	COVER-REAR;21M21(SEDA),HIPS,HB,G4309	
..2	T0214	AA65-30008A	CLAMPER CORE-CORD;-,PE,HB,-,BLK,-	S.N.A
..2		AA64-03974B	INLAY-BACK;KS7A,(ET),NT,PS,T0.3,SHEET,BL	S.N.A
			ASSY CPT	
1	T0521	AA91-07326E	ASSY CPT;21 SDI,0MG,A51QDX993X	S.N.A
⚠..2	T0063	AA03-00403A	CRT COLOR;A51QDX993X,0MG,1.75MH,18MH,3.1	
..2	T0079	AA27-00002A	MAGNET CONVERGENCE;JH291-11D,29.1MM	
..2	T0089	AA27-00256A	COIL DEGAUSSING;,21IHCH,10%,35TS,4.5OHM,	
..2	T0078	AA27-00324A	DEFLECTION YOKE;,DIF-2192AA(A),S/T,A51QD	
..2		AA63-60028A	SPACER-DY;-,NEOPRENE,-,-,-,BLK,-,-,V0 W1	S.N.A
..2	T0527	AA65-00009B	CLAMPER CORE-D,COIL;21A8,NYLON 66,V0,-,-	S.N.A
..2		AA98-70014D	ASSY TBC WIRE P;TVI,22,NTSC,PAL,1P,UL101	S.N.A
			ASSY CHASSIS	
1	M0017	AA91-08457M	ASSY CHASSIS;TEST	S.N.A
..2	T0091	AA94-14616A	ASSY PCB MISC-A/V SIDE;CT21T20MQUX,KS7A	
...3		0202-001366	SOLDER-WIRE FLUX;-,RS60S,D1.2,63Sn/37Pb,	S.N.A
...3	JE01	3722-000143	JACK-PHONE;1P(VER),3.4PI,AG,BLK,NO	
...3	JA01	3722-001031	JACK-PIN;3P,3.6mm,#18,AU	
...3	T0245	AA39-20009D	LEAD CONNECTOR-ASSY;,1P,500,YFH800-01,16	
...3	T0245	AA39-20068E	LEAD CONNECTOR-ASSY;,8P,500,YBNH025-08,6	
...3	T0245	AA39-20069D	LEAD CONNECTOR-ASSY;,5P,300,YBNH025-05,6	
...3	BAND-W	AA63-10002A	BAND-TIE;NYLON66 V2,L100,NTR	S.N.A
...3		AA97-15391A	ASSY AUTO;CT21T20MQUXXTC,KS7A	S.N.A
....4	R075	2001-000028	R-CARBON(S);100OHM,5%,1/2W,AA,TP,2.4X6.4	
....4	R075	2001-000028	R-CARBON(S);100OHM,5%,1/2W,AA,TP,2.4X6.4	
....4	C701	2401-003102	C-AL;100uF,20%,10V,GP,TP,5x11,5	
....4	C701	2401-003102	C-AL;100uF,20%,10V,GP,TP,5x11,5	
....4	0	AA41-01070A	PCB-AV SIDE;CT-25K10G,FR-1,1,A,1.6,KS7A,	S.N.A
..2	M0014	AA94-14774M	ASSY PCB MAIN;TEST	
...3		0202-001366	SOLDER-WIRE FLUX;-,RS60S,D1.2,63Sn/37Pb,	S.N.A
...3	T0083	0402-001295	DIODE-RECTIFIER;GUR460L-5700,600V,4A,DO-	
...3	T0083	0402-001599	DIODE-RECTIFIER;DGP30L,1500,3A,DO-201AD(	
...3	DZ016	0403-000714	DIODE-ZENER;MTZJ3.3B,3.32-3.53V,500MW,DO	
⚠...3	PC801S	0604-001032	PHOTO-COUPLER;TR,170-260%,300mW,DIP-4,ST	
...3	IC112	1103-001171	IC-EEPROM;24C161,2Kx8,DIP,8P,9.2x6.4mm,2	
...3	T0087	1203-001006	IC-POSI.FIXED REG.;78R05,TO-220F,4P,-,PL	
...3	T0900	1404-001045	THERMISTOR-NTC;4.7ohm,15%,2900K,35.0mW,T	
...3	P803T	1404-001264	THERMISTOR-PTC;4.5OHM,+30/-20%,220V,290V	
...3	C598	2201-000963	C-CERAMIC,DISC;1NF,20%,400V,Y5U,TP,9.5X6	
...3	C598	2201-000987	C-CERAMIC,DISC;2.2NF,20%,400V,Y5U,BK,12.	
⚠...3	C405S	2301-001338	C-FILM,LEAD-OTHER;0.68NF,5%,1.6KV,BK,28X	
...3	C2560	2301-001396	C-FILM,LEAD-PEF;100nF,10%,630V,TP,18x6.5	
⚠...3	CR402S	2301-001468	C-FILM,LEAD-PPF;3.3NF,3%,1.6KV,BK,29X13.	
⚠...3	CX801S	2306-000318	C-FILM,LEAD-PPF;220NF,20%,250V,BK,-,22.5	
⚠...3	CR403S	2306-000323	C-FILM,LEAD-PPF;2.2NF,5%,1.6KV,BK,23X9X1	
⚠...3	CR406S	2306-000350	C-FILM,LEAD-PPF;270NF,5%,400V,BK,26X18.5	
...3	C701	2401-003025	C-AL;330uF,20%,400V,GP,BK,30x40,10	
...3	C701	2401-003633	C-AL;220uF,20%,160V,GP,BK,22x25mm,10	
...3	LV251	2701-000116	INDUCTOR-AXIAL;10UH,10%,4298	
...3	XV201	2801-004019	CRYSTAL-UNIT;20.25MHz,30ppm,28-AAM,13pF,	
...3	ICV101	2904-001196	FILTER-SAW AV;44MHZ,SIP5K,ST,16.2DB,-,42	
⚠...3	RL801S	3501-001053	RELAY-POWER;5VDC,530MW,10000MA,1FORMA,15	
⚠...3	FP801S	3601-000414	FUSE-CARTRIDGE;250V,5A,SLOW-BLOW,GLASS,5	
⚠...3	V999S	3704-001197	SOCKET-CRT;8P+SEN,29PI,22.5PI,NI+SN,-	
...3	CN906	3711-000999	CONNECTOR-HEADER;BOX,5P,1R,2.5mm,STRAIGH	
...3	CN906	3711-001084	CONNECTOR-HEADER;BOX,8P,1R,2.5mm,STRAIGH	
...3	CN906	3711-003043	CONNECTOR-HEADER;BOX,4P,1R,2.5MM,STRAIGH	
...3	CN906	3711-003043	CONNECTOR-HEADER;BOX,4P,1R,2.5MM,STRAIGH	
...3	CN906	3711-003241	CONNECTOR-HEADER;BOX,14P,1R,2.5MM,STRAIG	
...3	JAR701	3722-001333	JACK-PIN;9P,3.2mm,NI,BLK,-	
...3	DVD_SVHS	3722-001423	JACK-PIN;3P+S1P,3.4mm,NI,BLK,-	
⚠...3	T801S	AA26-00228B	TRANS SWITCHING;EER4245,CT-29K10G,PL5,PM	
...3	T0616	AA26-00237A	TRANS FBT;FOK14B001,CPTTV,3.8mH,U 3277,F	S.N.A
⚠...3	T401	AA26-50001R	TRANS-HORIZ.DRIVE;-,-,-,80MH,-,-,520UH,-	
...3	L409	AA27-00338A	COIL CHOKE;DR1220,CL21M21,320uH,10%,0.25	
...3	L808	AA27-10002L	COIL CHOKE;-,24uH,K,-,2A,-,24UH-K,10x10m	
...3	T0296	AA27-30003L	COIL LINEARITY;-,73uH,DR12x15,0.55mm,-,B	
⚠...3	LX801S	AA29-00012A	FILTER LINE NOISE;CS29A6PF8X/HAC,-,0.1MA	
...3	M2893	AA39-00376B	LEAD CONNECTOR;ET-PAL CIS,UL1007/2547#26	
...3	CIS3	AA40-00016A	TUNER-F/S;TDQ-6F/13F2S,NTSC,181CH,45.75M	
...3	GT301	AA60-40012D	PIN-GT,ASSY;T1.6,6-12.5-,NYLON66	S.N.A
⚠...3	D801S	AA96-00276C	ASSY HEAT SINK P;-,BRIDGE ,AA62-00052A,G	S.N.A
....4		0205-001153	GREASE-SILICON;SC102,JAPAN,-	S.N.A
....4	T0083	0402-001399	DIODE-BRIDGE;GSIB660,600V,6A,SIP-4,BK	
....4	T0081	6003-000335	SCREW-TAPTITE;RH,+,2S,M3,L8,ZPC(YEL),SWR	S.N.A
....4		AA60-30003A	WASHER;T1.5,SBHG-1	S.N.A
....4		AA62-00052A	HEAT SINK-PS;-,-,-,SILVER,HOLE 18.5mm, 2	S.N.A
...3	HC801	AA96-00475J	ASSY HEAT SINK P;AA62-00066B,SCREW,FMG-G	S.N.A
....4	H/S	0205-001154	OIL-SILICON;G746,-,-	S.N.A
....4	T0083	0402-001230	DIODE-RECTIFIER;FMG-G2CS,1000V,3A,DO-41,	
....4	T0083	0402-001374	DIODE-RECTIFIER;FFPF06U20S,200V,6A,TO-22	
....4	T0087	1203-001006	IC-POSI.FIXED REG.;78R05,TO-220F,4P,-,PL	
....4	T0087	1203-001543	IC-POSI.FIXED REG.;78R33,TO-220,4P,400MI	
....4	T0081	6003-000334	SCREW-TAPTITE;RH,+,2S,M3,L6,ZPC(YEL),SWR	S.N.A
....4	H/S	AA62-00066B	HEAT SINK;D2,D3,AL ,T1.0,89,70,-,AA62-00	S.N.A

Level	Loc.No.	Code No.	Description;Specification	Remark
...3	IC301	AA96-00623F	ASSY HEAT SINK P;LA78045,SCREW,AA62-0005	S.N.A
....4	CIS	0205-001154	OIL-SILICON;G746,-,-	S.N.A
....4	T0088	1204-002183	IC-VERTICAL PROCESSO;LA78045,TO220,7P,15	
....4	T0081	6003-000334	SCREW-TAPTITE;RH,+,2S,M3,L6,ZPC(YEL),SWR	S.N.A
....4	CIS	AA62-00056A	HEAT SINK-PS;-,-,T1.0,-,41*35*70,D2,-,-,	S.N.A
...3	Q401	AA96-00624J	ASSY HEAT SINK P;SCREW,AA62-00057A,C5936	S.N.A
....4	H/S	0205-001154	OIL-SILICON;G746,-,-	S.N.A
....4	T0090	0502-001264	TR-POWER;2SC5936,NPN,40000mW,TOP-3E,ST,5	
....4	T0081	6003-000333	SCREW-TAPTITE;RH,+,2S,M3,L10,ZPC(YEL),SW	S.N.A
....4	H/S	AA60-30001A	WASHER-PLATE;M3,ID3.5,15X8.5,T1.0,SBHG	S.N.A
....4	H/S	AA62-00057A	HEAT SINK-PS;-,-,T1.0,-,41*20*60,D2,-,-,	S.N.A
...3	IC602	AA96-02124B	ASSY HEAT SINK P;AA62-30182G,SCREW,TDA72	S.N.A
....4	H/S	0205-001154	OIL-SILICON;G746,-,-	S.N.A
....4	T0085	1201-002121	IC-AUDIO AMP;TDA7266SA,CLIPWATT,15P,19.8	
....4	T0081	6003-000333	SCREW-TAPTITE;RH,+,2S,M3,L10,ZPC(YEL),SW	S.N.A
....4	H/S	AA61-01390A	BRACKET-IC;CT-29A20HR,SECC,T1.0	S.N.A
....4	H/S	AA62-30182G	HEAT SINK-ES;CT-29A20HR,A6063S,T2.0,26.2	S.N.A
...3	IC501	AA96-50311N	ASSY HEAT SINK P;AA62-30175D,TDA6109JF,S	S.N.A
....4	T0074	1201-002114	IC-VIDEO AMP;TDA6109JF,SDIP,9P,18.5mm,-,	
....4	T0081	6003-000334	SCREW-TAPTITE;RH,+,2S,M3,L6,ZPC(YEL),SWR	S.N.A
....4	H/S	AA62-30175D	HEAT SINK-PS;-,SECC,T1.0,-,33X15X30 FT-2	S.N.A
⚠...3	IC801S	AA96-50371K	ASSY HEAT SINK P;AA62-30181H,SCREW,STR-X	S.N.A
....4	CIS	0205-001154	OIL-SILICON;G746,-,-	S.N.A
....4	T0081	6003-000333	SCREW-TAPTITE;RH,+,2S,M3,L10,ZPC(YEL),SW	S.N.A
....4	CIS	AA62-30181H	HEAT SINK-ES;-,AL6063 EXTR.,2,WHT,50MM,-	S.N.A
....4	IC063	AA13-00112A	IC HYBRID;STR-X6750B,CS29M6PF,7,-20 to +	
...3	M0018	AA97-15547C	ASSY MICOM;,KS7A,GOLD RUSH,VCT49XX,T-GRN	
....4	T0119	AA09-00441A	IC MICOM;VCT4942,ONE CHIP,88P,1.8/3.3/5/	S.N.A
...3		AA97-15561A	ASSY AUTO;CL21M21MQUXXAZ,KS7A,GOLD RUSH,	S.N.A
⚠....4	CISS	0401-000005	DIODE-SWITCHING;1N4148,75V,150MA,DO-35,T	
⚠....4	CISS	0401-000005	DIODE-SWITCHING;1N4148,75V,150MA,DO-35,T	
⚠....4	CISS	0401-000005	DIODE-SWITCHING;1N4148,75V,150MA,DO-35,T	
⚠....4	CISS	0401-000005	DIODE-SWITCHING;1N4148,75V,150MA,DO-35,T	
⚠....4	CISS	0401-000005	DIODE-SWITCHING;1N4148,75V,150MA,DO-35,T	
⚠....4	CISS	0401-000005	DIODE-SWITCHING;1N4148,75V,150MA,DO-35,T	
⚠....4	CISS	0401-000005	DIODE-SWITCHING;1N4148,75V,150MA,DO-35,T	
⚠....4	CISS	0401-000005	DIODE-SWITCHING;1N4148,75V,150MA,DO-35,T	
⚠....4	CISS	0401-000006	DIODE-SWITCHING;BAV21,250V,200MA,DO-35,T	
⚠....4	CISS	0401-000006	DIODE-SWITCHING;BAV21,250V,200MA,DO-35,T	
....4	T0083	0402-000132	DIODE-RECTIFIER;1N4004,400V,1A,DO-41,TP	
....4	T0083	0402-000132	DIODE-RECTIFIER;1N4004,400V,1A,DO-41,TP	
....4	T0083	0402-000132	DIODE-RECTIFIER;1N4004,400V,1A,DO-41,TP	
....4	T0083	0402-000132	DIODE-RECTIFIER;1N4004,400V,1A,DO-41,TP	
....4	T0083	0402-000254	DIODE-RECTIFIER;RGP10J,600V,1A,DO-41,TP	
....4	T0083	0402-000493	DIODE-RECTIFIER;1R5GU41,400V,1.5A,DO-15L	
....4	T0083	0402-000534	DIODE-RECTIFIER;RG10V,400V,1.2A,DO-201,T	
....4	T0083	0402-000540	DIODE-RECTIFIER;RU20A,600V,1.5A,-,TP	
....4	T0083	0402-000546	DIODE-RECTIFIER;TVR10G,400V,1.0A,DO-41,T	
....4	T0083	0402-000546	DIODE-RECTIFIER;TVR10G,400V,1.0A,DO-41,T	
....4	T0083	0402-000546	DIODE-RECTIFIER;TVR10G,400V,1.0A,DO-41,T	
....4	T0083	0402-000546	DIODE-RECTIFIER;TVR10G,400V,1.0A,DO-41,T	
....4	T0083	0402-000546	DIODE-RECTIFIER;TVR10G,400V,1.0A,DO-41,T	
....4	T0083	0402-000546	DIODE-RECTIFIER;TVR10G,400V,1.0A,DO-41,T	
....4	T0083	0402-000546	DIODE-RECTIFIER;TVR10G,400V,1.0A,DO-41,T	
....4	T0083	0402-000546	DIODE-RECTIFIER;TVR10G,400V,1.0A,DO-41,T	
....4	DZ016	0403-000508	DIODE-ZENER;MTZJ5.6B,5.45-5.73V,500MW,DO	
....4	DZ016	0403-000508	DIODE-ZENER;MTZJ5.6B,5.45-5.73V,500MW,DO	
....4	DZ016	0403-000508	DIODE-ZENER;MTZJ5.6B,5.45-5.73V,500MW,DO	
....4	DZ016	0403-000510	DIODE-ZENER;MTZJ6.2B,5.96-6.27V,500MW,DO	
....4	DZ016	0403-000700	DIODE-ZENER;TZP33A,5%,1000MW,DO-41,TP	
....4	DZ016	0403-000700	DIODE-ZENER;TZP33A,5%,1000MW,DO-41,TP	
....4	DZ016	0403-000700	DIODE-ZENER;TZP33A,5%,1000MW,DO-41,TP	
....4	DZ016	0403-000714	DIODE-ZENER;MTZJ3.3B,3.32-3.53V,500MW,DO	
....4	DZ016	0403-000716	DIODE-ZENER;MTZJ4.7B,4.59-4.77V,500MW,DO	
....4	DZ016	0403-000720	DIODE-ZENER;MTZJ9.1B,8.57-9.01V,500MW,DO	
....4	DZ016	0403-000720	DIODE-ZENER;MTZJ9.1B,8.57-9.01V,500MW,DO	
....4	DZ016	0403-000720	DIODE-ZENER;MTZJ9.1B,8.57-9.01V,500MW,DO	
....4	DZ016	0403-000720	DIODE-ZENER;MTZJ9.1B,8.57-9.01V,500MW,DO	
....4	DZ016	0403-000720	DIODE-ZENER;MTZJ9.1B,8.57-9.01V,500MW,DO	
....4	DZ016	0403-000720	DIODE-ZENER;MTZJ9.1B,8.57-9.01V,500MW,DO	
....4	DZ016	0403-000720	DIODE-ZENER;MTZJ9.1B,8.57-9.01V,500MW,DO	
....4	DZ016	0403-001211	DIODE-ZENER;MTZJ12B,11.8-12.3V,500MW,DO-	
....4	DZ016	0403-001211	DIODE-ZENER;MTZJ12B,11.8-12.3V,500MW,DO-	
....4	DZ016	0403-001211	DIODE-ZENER;MTZJ12B,11.8-12.3V,500MW,DO-	
....4	DZ016	0403-001221	DIODE-ZENER;UZ39BSB,35.36-37.19V,500MW,D	
....4	DZ016	0403-001320	DIODE-ZENER;MTZJ6.2C,6.16-6.4V,500MW,DO-	
....4	DZ016	0403-001321	DIODE-ZENER;MTZJ6.8C,6.7-6.97V,500MW,DO-	
....4	DZ016	0403-001329	DIODE-ZENER;MTZJ24B,22.75-23.73V,500MW,D	

Level	Loc.No.	Code No.	Description;Specification	Remark
....4	DZ016	0403-001329	DIODE-ZENER;MTZJ24B,22.75-23.73V,500MW,D	
....4	DZ016	0403-001329	DIODE-ZENER;MTZJ24B,22.75-23.73V,500MW,D	
....4	T0156	0501-000010	TR-SMALL SIGNAL;KSC1008,NPN,800mW,TO-92,	
....4	T0156	0501-000010	TR-SMALL SIGNAL;KSC1008,NPN,800mW,TO-92,	
....4	T0156	0501-000283	TR-SMALL SIGNAL;KSA539,PNP,400mW,TO-92,T	
....4	T0156	0501-000283	TR-SMALL SIGNAL;KSA539,PNP,400mW,TO-92,T	
....4	T0156	0501-000283	TR-SMALL SIGNAL;KSA539,PNP,400mW,TO-92,T	
....4	T0156	0501-000283	TR-SMALL SIGNAL;KSA539,PNP,400mW,TO-92,T	
....4	T0156	0501-000283	TR-SMALL SIGNAL;KSA539,PNP,400mW,TO-92,T	
....4	T0156	0501-000369	TR-SMALL SIGNAL;KSC2331-Y,NPN,1000mW,TO-	
....4	T0156	0501-000389	TR-SMALL SIGNAL;KSC815,NPN,400mW,TO-92,T	
....4	T0156	0501-000389	TR-SMALL SIGNAL;KSC815,NPN,400mW,TO-92,T	
....4	T0156	0501-000389	TR-SMALL SIGNAL;KSC815,NPN,400mW,TO-92,T	
....4	T0156	0501-000389	TR-SMALL SIGNAL;KSC815,NPN,400mW,TO-92,T	
....4	T0156	0501-000389	TR-SMALL SIGNAL;KSC815,NPN,400mW,TO-92,T	
....4	T0156	0501-000389	TR-SMALL SIGNAL;KSC815,NPN,400mW,TO-92,T	
....4	T0156	0501-000389	TR-SMALL SIGNAL;KSC815,NPN,400mW,TO-92,T	
....4	T0156	0501-000389	TR-SMALL SIGNAL;KSC815,NPN,400mW,TO-92,T	
....4	T0156	0501-000389	TR-SMALL SIGNAL;KSC815,NPN,400mW,TO-92,T	
....4	T0156	0501-000389	TR-SMALL SIGNAL;KSC815,NPN,400mW,TO-92,T	
....4	T0090	0502-001007	TR-POWER;KSC2073-H2,NPN,25W,TO-220,ST,6	
....4	Q409	0505-000109	FET-SILICON;2N7000,N,60V,200mA,5ohm,400m	
....4	Q409	0505-000109	FET-SILICON;2N7000,N,60V,200mA,5ohm,400m	
....4	T0087	1203-000293	IC-POSI.FIXED REG.;7808,TO-220,3P,-,PLAS	
....4	IC012	1203-001217	IC-POSI.ADJUST REG.;431,TO-92,3P,4.58MIL	
....4	IC202	1203-001943	IC-VOL. DETECTOR;7025,TO-92,3P,-,PLASTIC	
....4	T0087	1203-001944	IC-POSI.FIXED REG.;78RM33,TO-220,3P,-,PL	
⚠....4	VP801S	1405-000152	VARISTOR;560V,2500A,14x8.5mm,TP	
⚠....4	VX801S	1405-000152	VARISTOR;560V,2500A,14x8.5mm,TP	
....4	R125	2001-000003	R-CARBON;330ohm,5%,1/8W,AA,TP,1.8x3.2mm	
....4	R125	2001-000003	R-CARBON;330ohm,5%,1/8W,AA,TP,1.8x3.2mm	
....4	R125	2001-000005	R-CARBON;390ohm,5%,1/8W,AA,TP,1.8x3.2mm	
....4	R125	2001-000005	R-CARBON;390ohm,5%,1/8W,AA,TP,1.8x3.2mm	
....4	R125	2001-000006	R-CARBON;2.4KOHM,5%,1/8W,AA,TP,1.8X3.2MM	
....4	R075	2001-000016	R-CARBON(S);1OHM,5%,1/2W,AA,TP,2.4X6.4MM	
....4	R075	2001-000020	R-CARBON(S);22OHM,5%,1/2W,AA,TP,2.4X6.4M	
....4	R075	2001-000037	R-CARBON(S);330OHM,5%,1/2W,AA,TP,2.4X6.4	
....4	R075	2001-000052	R-CARBON(S);3.3KOHM,5%,1/2W,AA,TP,2.4X6.	
....4	R125	2001-000221	R-CARBON;1.2KOHM,5%,1/8W,AA,TP,1.8X3.2MM	
....4	R125	2001-000221	R-CARBON;1.2KOHM,5%,1/8W,AA,TP,1.8X3.2MM	
....4	R125	2001-000252	R-CARBON;1.6KOHM,5%,1/8W,AA,TP,1.8X3.2MM	
....4	R125	2001-000273	R-CARBON;100KOHM,5%,1/8W,AA,TP,1.8X3.2MM	
....4	R125	2001-000273	R-CARBON;100KOHM,5%,1/8W,AA,TP,1.8X3.2MM	
....4	R125	2001-000273	R-CARBON;100KOHM,5%,1/8W,AA,TP,1.8X3.2MM	
....4	R125	2001-000281	R-CARBON;100OHM,5%,1/8W,AA,TP,1.8X3.2MM	
....4	R125	2001-000281	R-CARBON;100OHM,5%,1/8W,AA,TP,1.8X3.2MM	
....4	R125	2001-000281	R-CARBON;100OHM,5%,1/8W,AA,TP,1.8X3.2MM	
....4	R125	2001-000281	R-CARBON;100OHM,5%,1/8W,AA,TP,1.8X3.2MM	
....4	R125	2001-000281	R-CARBON;100OHM,5%,1/8W,AA,TP,1.8X3.2MM	
....4	R125	2001-000281	R-CARBON;100OHM,5%,1/8W,AA,TP,1.8X3.2MM	
....4	R125	2001-000281	R-CARBON;100OHM,5%,1/8W,AA,TP,1.8X3.2MM	
....4	R125	2001-000281	R-CARBON;100OHM,5%,1/8W,AA,TP,1.8X3.2MM	
....4	R125	2001-000281	R-CARBON;100OHM,5%,1/8W,AA,TP,1.8X3.2MM	
....4	R125	2001-000281	R-CARBON;100OHM,5%,1/8W,AA,TP,1.8X3.2MM	
....4	R125	2001-000281	R-CARBON;100OHM,5%,1/8W,AA,TP,1.8X3.2MM	
....4	R125	2001-000281	R-CARBON;100OHM,5%,1/8W,AA,TP,1.8X3.2MM	
....4	R125	2001-000281	R-CARBON;100OHM,5%,1/8W,AA,TP,1.8X3.2MM	
....4	R125	2001-000281	R-CARBON;100OHM,5%,1/8W,AA,TP,1.8X3.2MM	
....4	R125	2001-000281	R-CARBON;100OHM,5%,1/8W,AA,TP,1.8X3.2MM	
....4	R125	2001-000281	R-CARBON;100OHM,5%,1/8W,AA,TP,1.8X3.2MM	
....4	R125	2001-000281	R-CARBON;100OHM,5%,1/8W,AA,TP,1.8X3.2MM	
....4	R125	2001-000281	R-CARBON;100OHM,5%,1/8W,AA,TP,1.8X3.2MM	
....4	R125	2001-000281	R-CARBON;100OHM,5%,1/8W,AA,TP,1.8X3.2MM	
....4	R125	2001-000281	R-CARBON;100OHM,5%,1/8W,AA,TP,1.8X3.2MM	
....4	R125	2001-000281	R-CARBON;100OHM,5%,1/8W,AA,TP,1.8X3.2MM	
....4	R125	2001-000281	R-CARBON;100OHM,5%,1/8W,AA,TP,1.8X3.2MM	
....4	R125	2001-000281	R-CARBON;100OHM,5%,1/8W,AA,TP,1.8X3.2MM	
....4	R125	2001-000281	R-CARBON;100OHM,5%,1/8W,AA,TP,1.8X3.2MM	
....4	R125	2001-000281	R-CARBON;100OHM,5%,1/8W,AA,TP,1.8X3.2MM	
....4	R125	2001-000281	R-CARBON;100OHM,5%,1/8W,AA,TP,1.8X3.2MM	
....4	R125	2001-000281	R-CARBON;100OHM,5%,1/8W,AA,TP,1.8X3.2MM	
....4	R125	2001-000281	R-CARBON;100OHM,5%,1/8W,AA,TP,1.8X3.2MM	
....4	R125	2001-000281	R-CARBON;100OHM,5%,1/8W,AA,TP,1.8X3.2MM	
....4	R125	2001-000281	R-CARBON;100OHM,5%,1/8W,AA,TP,1.8X3.2MM	
....4	R125	2001-000281	R-CARBON;100OHM,5%,1/8W,AA,TP,1.8X3.2MM	
....4	R125	2001-000281	R-CARBON;100OHM,5%,1/8W,AA,TP,1.8X3.2MM	
....4	R125	2001-000290	R-CARBON;10KOHM,5%,1/8W,AA,TP,1.8X3.2MM	
....4	R125	2001-000290	R-CARBON;10KOHM,5%,1/8W,AA,TP,1.8X3.2MM	
....4	R125	2001-000290	R-CARBON;10KOHM,5%,1/8W,AA,TP,1.8X3.2MM	
....4	R125	2001-000290	R-CARBON;10KOHM,5%,1/8W,AA,TP,1.8X3.2MM	
....4	R125	2001-000290	R-CARBON;10KOHM,5%,1/8W,AA,TP,1.8X3.2MM	
....4	R125	2001-000290	R-CARBON;10KOHM,5%,1/8W,AA,TP,1.8X3.2MM	
....4	R125	2001-000290	R-CARBON;10KOHM,5%,1/8W,AA,TP,1.8X3.2MM	
....4	R125	2001-000290	R-CARBON;10KOHM,5%,1/8W,AA,TP,1.8X3.2MM	
....4	R125	2001-000313	R-CARBON;11KOHM,5%,1/8W,AA,TP,1.8X3.2MM	
....4	R125	2001-000331	R-CARBON;12KOHM,5%,1/8W,AA,TP,1.8X3.2MM	
....4	R125	2001-000362	R-CARBON;150OHM,5%,1/8W,AA,TP,1.8X3.2MM	
....4	R125	2001-000362	R-CARBON;150OHM,5%,1/8W,AA,TP,1.8X3.2MM	
....4	R125	2001-000362	R-CARBON;150OHM,5%,1/8W,AA,TP,1.8X3.2MM	
....4	R125	2001-000376	R-CARBON;15OHM,5%,1/8W,AA,TP,1.8X3.2MM	
....4	R125	2001-000411	R-CARBON;18KOHM,5%,1/8W,AA,TP,1.8X3.2MM	

Level	Loc.No.	Code No.	Description;Specification	Remark
....4	R125	2001-000429	R-CARBON;1KOHM,5%,1/8W,AA,TP,1.8X3.2MM	
....4	R125	2001-000429	R-CARBON;1KOHM,5%,1/8W,AA,TP,1.8X3.2MM	
....4	R125	2001-000429	R-CARBON;1KOHM,5%,1/8W,AA,TP,1.8X3.2MM	
....4	R125	2001-000429	R-CARBON;1KOHM,5%,1/8W,AA,TP,1.8X3.2MM	
....4	R125	2001-000429	R-CARBON;1KOHM,5%,1/8W,AA,TP,1.8X3.2MM	
....4	R125	2001-000429	R-CARBON;1KOHM,5%,1/8W,AA,TP,1.8X3.2MM	
....4	R125	2001-000429	R-CARBON;1KOHM,5%,1/8W,AA,TP,1.8X3.2MM	
....4	R125	2001-000429	R-CARBON;1KOHM,5%,1/8W,AA,TP,1.8X3.2MM	
....4	R125	2001-000429	R-CARBON;1KOHM,5%,1/8W,AA,TP,1.8X3.2MM	
....4	R125	2001-000429	R-CARBON;1KOHM,5%,1/8W,AA,TP,1.8X3.2MM	
....4	R125	2001-000429	R-CARBON;1KOHM,5%,1/8W,AA,TP,1.8X3.2MM	
....4	R125	2001-000429	R-CARBON;1KOHM,5%,1/8W,AA,TP,1.8X3.2MM	
....4	R125	2001-000449	R-CARBON;2.2KOHM,5%,1/8W,AA,TP,1.8X3.2MM	
....4	R125	2001-000449	R-CARBON;2.2KOHM,5%,1/8W,AA,TP,1.8X3.2MM	
....4	R125	2001-000449	R-CARBON;2.2KOHM,5%,1/8W,AA,TP,1.8X3.2MM	
....4	R125	2001-000449	R-CARBON;2.2KOHM,5%,1/8W,AA,TP,1.8X3.2MM	
....4	R125	2001-000522	R-CARBON;22KOHM,5%,1/8W,AA,TP,1.8X3.2MM	
....4	R125	2001-000522	R-CARBON;22KOHM,5%,1/8W,AA,TP,1.8X3.2MM	
....4	R125	2001-000522	R-CARBON;22KOHM,5%,1/8W,AA,TP,1.8X3.2MM	
....4	R125	2001-000527	R-CARBON;22OHM,5%,1/8W,AA,TP,1.8X3.2MM	
....4	R125	2001-000554	R-CARBON;270OHM,5%,1/8W,AA,TP,1.8X3.2MM	
....4	R125	2001-000554	R-CARBON;270OHM,5%,1/8W,AA,TP,1.8X3.2MM	
....4	R125	2001-000554	R-CARBON;270OHM,5%,1/8W,AA,TP,1.8X3.2MM	
....4	R125	2001-000591	R-CARBON;3.3KOHM,5%,1/8W,AA,TP,1.8X3.2MM	
....4	R125	2001-000613	R-CARBON;3.9KOHM,5%,1/8W,AA,TP,1.8X3.2MM	
....4	R125	2001-000660	R-CARBON;33KOHM,5%,1/8W,AA,TP,1.8X3.2MM	
....4	R125	2001-000666	R-CARBON;33OHM,5%,1/8W,AA,TP,1.8X3.2MM	
....4	R125	2001-000666	R-CARBON;33OHM,5%,1/8W,AA,TP,1.8X3.2MM	
....4	R125	2001-000666	R-CARBON;33OHM,5%,1/8W,AA,TP,1.8X3.2MM	
....4	R125	2001-000734	R-CARBON;4.7KOHM,5%,1/8W,AA,TP,1.8X3.2MM	
....4	R125	2001-000734	R-CARBON;4.7KOHM,5%,1/8W,AA,TP,1.8X3.2MM	
....4	R125	2001-000734	R-CARBON;4.7KOHM,5%,1/8W,AA,TP,1.8X3.2MM	
....4	R125	2001-000734	R-CARBON;4.7KOHM,5%,1/8W,AA,TP,1.8X3.2MM	
....4	R125	2001-000734	R-CARBON;4.7KOHM,5%,1/8W,AA,TP,1.8X3.2MM	
....4	R125	2001-000734	R-CARBON;4.7KOHM,5%,1/8W,AA,TP,1.8X3.2MM	
....4	R125	2001-000734	R-CARBON;4.7KOHM,5%,1/8W,AA,TP,1.8X3.2MM	
....4	R125	2001-000734	R-CARBON;4.7KOHM,5%,1/8W,AA,TP,1.8X3.2MM	
....4	R125	2001-000734	R-CARBON;4.7KOHM,5%,1/8W,AA,TP,1.8X3.2MM	
....4	R125	2001-000761	R-CARBON;430OHM,5%,1/8W,AA,TP,1.8X3.2MM	
....4	R125	2001-000780	R-CARBON;470OHM,5%,1/8W,AA,TP,1.8X3.2MM	
....4	R125	2001-000832	R-CARBON;510OHM,5%,1/8W,AA,TP,1.8X3.2MM	
....4	R125	2001-000832	R-CARBON;510OHM,5%,1/8W,AA,TP,1.8X3.2MM	
....4	R125	2001-000832	R-CARBON;510OHM,5%,1/8W,AA,TP,1.8X3.2MM	
....4	R125	2001-000832	R-CARBON;510OHM,5%,1/8W,AA,TP,1.8X3.2MM	
....4	R125	2001-000869	R-CARBON;56OHM,5%,1/8W,AA,TP,1.8X3.2MM	
....4	R125	2001-000924	R-CARBON;680OHM,5%,1/8W,AA,TP,1.8X3.2MM	
....4	R125	2001-000969	R-CARBON;75OHM,5%,1/8W,AA,TP,1.8X3.2MM	
....4	R125	2001-000969	R-CARBON;75OHM,5%,1/8W,AA,TP,1.8X3.2MM	
....4	R125	2001-000969	R-CARBON;75OHM,5%,1/8W,AA,TP,1.8X3.2MM	
....4	R125	2001-000969	R-CARBON;75OHM,5%,1/8W,AA,TP,1.8X3.2MM	
....4	R125	2001-000969	R-CARBON;75OHM,5%,1/8W,AA,TP,1.8X3.2MM	
....4	R125	2001-000969	R-CARBON;75OHM,5%,1/8W,AA,TP,1.8X3.2MM	
....4	R125	2001-000969	R-CARBON;75OHM,5%,1/8W,AA,TP,1.8X3.2MM	
....4	R125	2001-000977	R-CARBON;8.2KOHM,5%,1/8W,AA,TP,1.8X3.2MM	
....4	R125	2001-000995	R-CARBON;820OHM,5%,1/8W,AA,TP,1.8X3.2MM	
....4	R075	2001-001050	R-CARBON(S);1.5KOHM,5%,1/2W,AA,TP,2.4X6.	
....4	R075	2001-001062	R-CARBON(S);10MOHM,5%,1/2W,AA,TP,2.4X6.4	
....4	R075	2001-001079	R-CARBON(S);15OHM,5%,1/2W,AA,TP,2.4X6.4M	
....4	R075	2001-001088	R-CARBON(S);1KOHM,5%,1/2W,AA,TP,2.4X6.4M	
....4	R075	2001-001088	R-CARBON(S);1KOHM,5%,1/2W,AA,TP,2.4X6.4M	
....4	R075	2001-001107	R-CARBON(S);220ohm,5%,1/2W,AA,TP,2.4x6.4	
....4	R075	2001-001114	R-CARBON(S);270OHM,5%,1/2W,AA,TP,2.4X6.4	
....4	R075	2001-001115	R-CARBON(S);27KOHM,5%,1/2W,AA,TP,2.4X6.4	S.N.A
....4	R075	2001-001131	R-CARBON(S);33KOHM,5%,1/2W,AA,TP,2.4X6.4	
....4	R075	2001-001139	R-CARBON(S);39KOHM,5%,1/2W,AA,TP,2.4X6.4	
....4	R075	2001-001150	R-CARBON(S);470KOHM,5%,1/2W,AA,TP,2.4X6.	
....4	R075	2001-001150	R-CARBON(S);470KOHM,5%,1/2W,AA,TP,2.4X6.	
....4	R075	2001-001152	R-CARBON(S);47KOHM,5%,1/2W,AA,TP,2.4X6.4	
....4	R075	2001-001165	R-CARBON(S);56OHM,5%,1/2W,AA,TP,2.4X6.4M	
....4	R075	2001-001165	R-CARBON(S);56OHM,5%,1/2W,AA,TP,2.4X6.4M	
....4	R075	2001-001195	R-CARBON(S);82OHM,5%,1/2W,AA,TP,2.4X6.4M	
....4	R0521	2002-001008	R-COMPOSITION;1.8Kohm,10%,1/2W,AA,TP,3.7	
....4	R0521	2002-001008	R-COMPOSITION;1.8Kohm,10%,1/2W,AA,TP,3.7	
....4	R0521	2002-001008	R-COMPOSITION;1.8Kohm,10%,1/2W,AA,TP,3.7	
....4	R0521	2002-001010	R-COMPOSITION;1.8Mohm,5%,1/2W,AA,TP,3.7x	
....4	R0521	2002-001012	R-COMPOSITION;8.2Mohm,5%,1/2W,AA,TP,3.7x	

Level	Loc.No.	Code No.	Description;Specification	Remark
....4	R426	2003-000540	R-METAL OXIDE(S);1Kohm,5%,2W,AF,TP,4x12m	
....4	R802	2003-000586	R-METAL OXIDE(S);22Kohm,5%,2W,AF,TP,4x12	
....4	R803	2003-000586	R-METAL OXIDE(S);22Kohm,5%,2W,AF,TP,4x12	
....4	R804	2003-000586	R-METAL OXIDE(S);22Kohm,5%,2W,AF,TP,4x12	
....4	R830	2003-000586	R-METAL OXIDE(S);22Kohm,5%,2W,AF,TP,4x12	
....4	R831	2003-000586	R-METAL OXIDE(S);22Kohm,5%,2W,AF,TP,4x12	
....4	R423	2003-001042	R-METAL OXIDE(S);5.6Kohm,5%,2W,AF,TP,3.9	
....4	R309	2003-002009	R-METAL OXIDE(S);390ohm,5%,2W,AF,TP,3.9x	
....4	R310	2003-002009	R-METAL OXIDE(S);390ohm,5%,2W,AF,TP,3.9x	
....4	R835	2003-002020	R-METAL OXIDE(S);56Kohm,5%,2W,AF,TP,3.9x	
....4	R836	2003-002020	R-METAL OXIDE(S);56Kohm,5%,2W,AF,TP,3.9x	
....4	R420	2004-000412	R-METAL;18Kohm,1%,1/4W,AA,TP,2.4x6.4mm	
....4	RV909	2004-000869	R-METAL;3Kohm,1%,1/8W,AA,TP,1.8x3.2mm	
....4	R024	2004-001382	R-METAL(S);13Kohm,1%,1/2W,AA,TP,2.4x6.4m	
....4	R024	2004-001382	R-METAL(S);13Kohm,1%,1/2W,AA,TP,2.4x6.4m	
....4	R024	2004-001390	R-METAL(S);1Kohm,2%,1/2W,AA,TP,2.4x6.4mm	
....4	R024	2004-001397	R-METAL(S);4.7Kohm,1%,1/2W,AA,TP,2.4x6.4	
....4	R024	2004-001402	R-METAL(S);6.8Kohm,1%,1/2W,AA,TP,2.4x6.4	
....4	R024	2004-001891	R-METAL(S);133Kohm,1%,1/2W,AA,TP,2.5x6.5	
....4	R024	2004-001983	R-METAL(S);2.49Kohm,1%,1/2W,AA,TP,2.4x6.	
....4	RV212	2004-002187	R-METAL;619ohm,1%,1/8W,AA,TP,1.8x3.2mm	
....4	RV214	2004-002187	R-METAL;619ohm,1%,1/8W,AA,TP,1.8x3.2mm	
....4	RV216	2004-002187	R-METAL;619ohm,1%,1/8W,AA,TP,1.8x3.2mm	
....4	R024	2004-004045	R-METAL(S);390ohm,1%,1/2W,AA,TP,2.5x6.5m	
....4	R024	2004-004089	R-METAL(S);123Kohm,1%,1/2W,AA,TP,2.5x6.5	
....4	R024	2004-005054	R-METAL(S);39KOHM,1%,1/2W,AA,TP,2.4X6.4M	
....4	R834	2008-000205	R-FUSIBLE(S);10ohm,5%,1/2W,AF,TP,2.5x6.5	
....4	R829	2008-000252	R-FUSIBLE(S);0.47ohm,10%,1/2W,AF,TP,2.5x	
....4	R413	2008-000253	R-FUSIBLE(S);0.47ohm,5%,1W,AF,TP,3.9x10m	
....4	R414	2008-000264	R-FUSIBLE(S);1ohm,5%,1W,AF,TP,3.9x10mm	
....4	R825	2008-000284	R-FUSIBLE(S);0.1OHM,10%,2W,AF,TP,3.9X10M	
....4	R827	2008-000284	R-FUSIBLE(S);0.1OHM,10%,2W,AF,TP,3.9X10M	
....4	R304	2008-000290	R-FUSIBLE(S);2.4ohm,5%,2W,AF,TP,3.9x10mm	
....4	R837	2008-000290	R-FUSIBLE(S);2.4ohm,5%,2W,AF,TP,3.9x10mm	
....4	R898	2008-000290	R-FUSIBLE(S);2.4ohm,5%,2W,AF,TP,3.9x10mm	
....4	R418	2008-001023	R-FUSIBLE;3.3ohm,5%,1/2W,AF,TP,2.5x6.5mm	
....4	R303	2008-001076	R-FUSIBLE(S);1.8ohm,5%,2W,AF,TP,3.9x10mm	
....4	R828	2008-001138	R-FUSIBLE;2.4OHM,5%,1W,AF,TP,3.9X10MM	
....4	FD801A	2008-001160	R-PICO FUSIBLE;20mohm,20%,1W,AA,TP,2.3x6	
⚠ 4	FD802S	2008-001163	R-PICO FUSIBLE;10mohm,20%,1W,AA,TP,2.3x6	
....4	R0251	2009-000021	R-METAL PLATE;0.33ohm,10%,5W,CL,TP,5x14x	
....4	R0251	2009-000026	R-METAL PLATE;0.15OHM,10%,5W,CL,TP,5X14X	
....4	C598	2201-000132	C-CERAMIC,DISC;0.1NF,10%,500V,Y5P,TP,6.5	
....4	C598	2201-000192	C-CERAMIC,DISC;0.01NF,0.25PF,500V,C0G,TP	
....4	C598	2201-000291	C-CERAMIC,DISC;1NF,10%,500V,Y5P,TP,7.5X3	
....4	C598	2201-000332	C-CERAMIC,DISC;2.2NF,20%,250V,Y5U,TP,9X4	
....4	C598	2201-000332	C-CERAMIC,DISC;2.2NF,20%,250V,Y5U,TP,9X4	
....4	C598	2201-000374	C-CERAMIC,DISC;0.22NF,5%,50V,C0G,TP,10.5	
....4	C598	2201-000389	C-CERAMIC,DISC;0.022NF,5%,50V,C0G,TP,5X3	
....4	C598	2201-000389	C-CERAMIC,DISC;0.022NF,5%,50V,C0G,TP,5X3	
....4	C598	2201-000406	C-CERAMIC,DISC;0.27NF,10%,2KV,Y5P,TP,6.3	
....4	C598	2201-000467	C-CERAMIC,DISC;0.33NF,10%,2KV,Y5P,TP,6.3	
....4	C598	2201-000556	C-CERAMIC,DISC;0.47NF,10%,500V,Y5P,TP,5.	
....4	C598	2201-000556	C-CERAMIC,DISC;0.47NF,10%,500V,Y5P,TP,5.	
....4	C598	2201-000556	C-CERAMIC,DISC;0.47NF,10%,500V,Y5P,TP,5.	
....4	C598	2201-000556	C-CERAMIC,DISC;0.47NF,10%,500V,Y5P,TP,5.	
....4	C598	2201-000556	C-CERAMIC,DISC;0.47NF,10%,500V,Y5P,TP,5.	
....4	C598	2201-000558	C-CERAMIC,DISC;0.47NF,10%,50V,Y5P,TP,5X3	
....4	C598	2201-000599	C-CERAMIC,DISC;0.56NF,10%,500V,Y5P,TP,5.	
....4	C598	2201-000599	C-CERAMIC,DISC;0.56NF,10%,500V,Y5P,TP,5.	
....4	C598	2201-000723	C-CERAMIC,DISC;4.7NF,20%,3KV,Y5U,TP,16X5	
....4	C689	2202-000121	C-CERAMIC,MLC-AXIAL;100pF,10%,50V,Y5P,TP	
....4	C689	2202-000121	C-CERAMIC,MLC-AXIAL;100pF,10%,50V,Y5P,TP	
....4	C689	2202-000216	C-CERAMIC,MLC-AXIAL;0.027NF,5%,50V,SL,TP	
....4	C689	2202-000216	C-CERAMIC,MLC-AXIAL;0.027NF,5%,50V,SL,TP	
....4	C689	2202-000231	C-CERAMIC,MLC-AXIAL;0.33NF,10%,50V,Y5P,T	
....4	C689	2202-000231	C-CERAMIC,MLC-AXIAL;0.33NF,10%,50V,Y5P,T	
....4	C689	2202-000231	C-CERAMIC,MLC-AXIAL;0.33NF,10%,50V,Y5P,T	
....4	C689	2202-000231	C-CERAMIC,MLC-AXIAL;0.33NF,10%,50V,Y5P,T	
....4	C689	2202-000231	C-CERAMIC,MLC-AXIAL;0.33NF,10%,50V,Y5P,T	
....4	C689	2202-000231	C-CERAMIC,MLC-AXIAL;0.33NF,10%,50V,Y5P,T	
....4	C689	2202-000231	C-CERAMIC,MLC-AXIAL;0.33NF,10%,50V,Y5P,T	
....4	C689	2202-000231	C-CERAMIC,MLC-AXIAL;0.33NF,10%,50V,Y5P,T	
....4	C689	2202-000231	C-CERAMIC,MLC-AXIAL;0.33NF,10%,50V,Y5P,T	
....4	C689	2202-000231	C-CERAMIC,MLC-AXIAL;0.33NF,10%,50V,Y5P,T	
....4	C689	2202-000243	C-CERAMIC,MLC-AXIAL;33pF,5%,50V,SL,TP,3.	
....4	C689	2202-000243	C-CERAMIC,MLC-AXIAL;33pF,5%,50V,SL,TP,3.	

Level	Loc.No.	Code No.	Description;Specification	Remark
....4	C689	2202-000243	C-CERAMIC,MLC-AXIAL;33pF,5%,50V,SL,TP,3.	
....4	C689	2202-000796	C-CERAMIC,MLC-AXIAL;1NF,10%,50V,Y5P,TP,3	
....4	C689	2202-000796	C-CERAMIC,MLC-AXIAL;1NF,10%,50V,Y5P,TP,3	
....4	C689	2202-000796	C-CERAMIC,MLC-AXIAL;1NF,10%,50V,Y5P,TP,3	
....4	C689	2202-000796	C-CERAMIC,MLC-AXIAL;1NF,10%,50V,Y5P,TP,3	
....4	C689	2202-000796	C-CERAMIC,MLC-AXIAL;1NF,10%,50V,Y5P,TP,3	
....4	C689	2202-000796	C-CERAMIC,MLC-AXIAL;1NF,10%,50V,Y5P,TP,3	
....4	C689	2202-000796	C-CERAMIC,MLC-AXIAL;1NF,10%,50V,Y5P,TP,3	
....4	C689	2202-000796	C-CERAMIC,MLC-AXIAL;1NF,10%,50V,Y5P,TP,3	
....4	C689	2202-000796	C-CERAMIC,MLC-AXIAL;1NF,10%,50V,Y5P,TP,3	
....4	C689	2202-000796	C-CERAMIC,MLC-AXIAL;1NF,10%,50V,Y5P,TP,3	
....4	C689	2202-000796	C-CERAMIC,MLC-AXIAL;1NF,10%,50V,Y5P,TP,3	
....4	C689	2202-000796	C-CERAMIC,MLC-AXIAL;1NF,10%,50V,Y5P,TP,3	
....4	C689	2202-000806	C-CERAMIC,MLC-AXIAL;220pF,10%,50V,Y5P,TP	
....4	C689	2202-000806	C-CERAMIC,MLC-AXIAL;220pF,10%,50V,Y5P,TP	
....4	C689	2202-000806	C-CERAMIC,MLC-AXIAL;220pF,10%,50V,Y5P,TP	
....4	C689	2202-000863	C-CERAMIC,MLC-AXIAL;560pF,10%,50V,Y5P,TP	
....4	C689	2202-002009	C-CERAMIC,MLC-AXIAL;100NF,+80-20%,50V,Y5	
....4	C689	2202-002037	C-CERAMIC,MLC-AXIAL;100nF,80-20%,50V,Y5V	
....4	C2560	2301-000192	C-FILM,LEAD-PEF;1nF,5%,50V,TP,5.3x10mm,5	
....4	C2560	2301-000224	C-FILM,LEAD-PEF;22nF,5%,50V,TP,7.4x3.9x1	
....4	C2560	2301-000224	C-FILM,LEAD-PEF;22nF,5%,50V,TP,7.4x3.9x1	
....4	C2560	2301-000224	C-FILM,LEAD-PEF;22nF,5%,50V,TP,7.4x3.9x1	
....4	C2560	2301-000342	C-FILM,LEAD-PEF;2.2nF,5%,50V,TP,7.4x3.9x	
....4	C2560	2301-000356	C-FILM,LEAD-PEF;47nF,5%,50V,TP,7.5x4.0x6	
....4	C2560	2301-000383	C-FILM,LEAD-PEF;10nF,5%,50V,TP,6x7x3.2mm	
....4	C2560	2301-000383	C-FILM,LEAD-PEF;10nF,5%,50V,TP,6x7x3.2mm	
....4	C2560	2301-000383	C-FILM,LEAD-PEF;10nF,5%,50V,TP,6x7x3.2mm	
....4	C2560	2301-000383	C-FILM,LEAD-PEF;10nF,5%,50V,TP,6x7x3.2mm	
....4	C504	2301-001259	C-FILM,LEAD-PPF;100nF,5%,400V,TP,19x8x16	
....4	C807	2301-001342	C-FILM,LEAD-PPF;1.5nF,5%,800V,TP,15x6.5x	
....4	C2560	2305-000285	C-FILM,LEAD-PEF;220NF,5%,100V,TP,10.5X5.	
....4	C2560	2305-000289	C-FILM,LEAD-PEF;220nF,5%,63V,TP,-,5mm	
....4	C2560	2305-000289	C-FILM,LEAD-PEF;220nF,5%,63V,TP,-,5mm	
....4	C2560	2305-000382	C-FILM,LEAD-PEF;4.7nF,5%,400V,TP,-,5mm	
....4	C2560	2305-000411	C-FILM,LEAD-PEF;470nF,5%,50V,TP,7.3x4.8x	
....4	C2560	2305-000411	C-FILM,LEAD-PEF;470nF,5%,50V,TP,7.3x4.8x	
....4	C2560	2305-000411	C-FILM,LEAD-PEF;470nF,5%,50V,TP,7.3x4.8x	
....4	C2560	2305-000411	C-FILM,LEAD-PEF;470nF,5%,50V,TP,7.3x4.8x	
....4	C2560	2305-000412	C-FILM,LEAD-PEF;470nF,5%,63V,TP,-,5mm	
....4	C2560	2305-000412	C-FILM,LEAD-PEF;470nF,5%,63V,TP,-,5mm	
....4	C2560	2305-000665	C-FILM,LEAD-PEF;100nF,5%,63V,TP,7.5x4.0x	
....4	C2560	2305-000665	C-FILM,LEAD-PEF;100nF,5%,63V,TP,7.5x4.0x	
....4	C2560	2305-000665	C-FILM,LEAD-PEF;100nF,5%,63V,TP,7.5x4.0x	
....4	C2560	2305-000665	C-FILM,LEAD-PEF;100nF,5%,63V,TP,7.5x4.0x	
....4	C2560	2305-000665	C-FILM,LEAD-PEF;100nF,5%,63V,TP,7.5x4.0x	
....4	C2560	2305-000665	C-FILM,LEAD-PEF;100nF,5%,63V,TP,7.5x4.0x	
....4	C2560	2305-000665	C-FILM,LEAD-PEF;100nF,5%,63V,TP,7.5x4.0x	
....4	C2560	2305-000665	C-FILM,LEAD-PEF;100nF,5%,63V,TP,7.5x4.0x	
....4	C2560	2305-001037	C-FILM,LEAD-PEF;330nF,5%,63V,TP,7.5x5.5x	
....4	CV101	2306-000122	C-FILM,LEAD-PPF;100nF,5%,50V,TP,7.3x4.0x	
....4	C701	2401-000025	C-AL;100uF,20%,16V,GP,TP,6.3x11,5	
....4	C701	2401-000302	C-AL;100uF,20%,25V,GP,TP,6.3x11,5	
....4	C701	2401-000360	C-AL;100uF,20%,50V,GP,TP,8x11.5,5	
....4	C701	2401-000365	C-AL;100uF,20%,50V,WT,TP,10x12.5mm,	
....4	C701	2401-000430	C-AL;10uF,20%,250V,GP,TP,10x16mm,5m	
....4	C701	2401-000430	C-AL;10uF,20%,250V,GP,TP,10x16mm,5m	
....4	C701	2401-000493	C-AL;10uF,20%,50V,LZ,TP,5x11mm,5mm	
....4	C701	2401-000493	C-AL;10uF,20%,50V,LZ,TP,5x11mm,5mm	
....4	C701	2401-000603	C-AL;1UF,20%,50V,GP,TP,5X11,2	
....4	C701	2401-000603	C-AL;1UF,20%,50V,GP,TP,5X11,2	
....4	C701	2401-001026	C-AL;3.3UF,20%,50V,GP,TP,5X11,5	
....4	C701	2401-001397	C-AL;470uF,20%,25V,GP,TP,10x16,5	
....4	C701	2401-001513	C-AL;47uF,20%,16V,WT,TP,5x11,5	
....4	C701	2401-001527	C-AL;47uF,20%,250V,HR,TP,13x25mm,5m	
....4	C701	2401-001914	C-AL;1uF,20%,50V,BP,TP,5x11,5	
....4	C701	2401-001914	C-AL;1uF,20%,50V,BP,TP,5x11,5	
....4	C701	2401-001989	C-AL;4.7uF,20%,50V,BP,TP,5x11,5	
....4	C701	2401-001989	C-AL;4.7uF,20%,50V,BP,TP,5x11,5	
....4	C701	2401-001989	C-AL;4.7uF,20%,50V,BP,TP,5x11,5	
....4	C701	2401-001989	C-AL;4.7uF,20%,50V,BP,TP,5x11,5	
....4	C701	2401-001989	C-AL;4.7uF,20%,50V,BP,TP,5x11,5	
....4	C701	2401-001989	C-AL;4.7uF,20%,50V,BP,TP,5x11,5	
....4	C701	2401-001998	C-AL;1000uF,20%,25V,GP,TP,10x20,5mm	
....4	C701	2401-002075	C-AL;4.7uF,20%,50V,GP,TP,5x11,5	

Level	Loc.No.	Code No.	Description;Specification	Remark
....4	C701	2401-002075	C-AL;4.7uF,20%,50V,GP,TP,5x11,5	
....4	C701	2401-002075	C-AL;4.7uF,20%,50V,GP,TP,5x11,5	
....4	C701	2401-002144	C-AL;47uF,20%,16V,GP,TP,5x11,5	
....4	C701	2401-002144	C-AL;47uF,20%,16V,GP,TP,5x11,5	
....4	C701	2401-002215	C-AL;2200uF,20%,25V,WT,TP,13x25,5	
....4	C701	2401-002215	C-AL;2200uF,20%,25V,WT,TP,13x25,5	
....4	C701	2401-002215	C-AL;2200uF,20%,25V,WT,TP,13x25,5	
....4	C701	2401-002288	C-AL;470uF,20%,25V,WT,TP,10x20,5	
....4	C701	2401-002463	C-AL;470uF,20%,16V,GP,TP,8x11.5,5	
....4	C701	2401-002594	C-AL;220uF,20%,16V,GP,TP,8x11.5,5	
....4	C701	2401-002597	C-AL;220uF,20%,35V,GP,TP,10x12.5,5	
....4	C701	2401-002619	C-AL;47uF,20%,25V,GP,TP,5x11,5	
....4	C701	2401-002619	C-AL;47uF,20%,25V,GP,TP,5x11,5	
....4	C701	2401-002619	C-AL;47uF,20%,25V,GP,TP,5x11,5	
....4	C701	2401-002619	C-AL;47uF,20%,25V,GP,TP,5x11,5	
....4	C701	2401-002619	C-AL;47uF,20%,25V,GP,TP,5x11,5	
....4	C701	2401-002619	C-AL;47uF,20%,25V,GP,TP,5x11,5	
....4	C701	2401-002619	C-AL;47uF,20%,25V,GP,TP,5x11,5	
....4	C701	2401-002619	C-AL;47uF,20%,25V,GP,TP,5x11,5	
....4	C701	2401-002619	C-AL;47uF,20%,25V,GP,TP,5x11,5	
....4	C701	2401-002619	C-AL;47uF,20%,25V,GP,TP,5x11,5	
....4	C701	2401-002619	C-AL;47uF,20%,25V,GP,TP,5x11,5	
....4	C701	2401-003553	C-AL;100uF,20%,200V,LZ,TP,16x25,7.5	
....4	C701	2401-003578	C-AL;1000uF,20%,10V,GP,TP,8x20mm,5	
....4	C701	2401-003578	C-AL;1000uF,20%,10V,GP,TP,8x20mm,5	
....4	LV101	2701-000114	INDUCTOR-AXIAL;10UH,10%,2534	
....4	LV252A	2701-000114	INDUCTOR-AXIAL;10UH,10%,2534	
....4	LV252B	2701-000114	INDUCTOR-AXIAL;10UH,10%,2534	
....4	RV101	2701-000114	INDUCTOR-AXIAL;10UH,10%,2534	
....4	RV102	2701-000114	INDUCTOR-AXIAL;10UH,10%,2534	
....4	LV204	2701-000115	INDUCTOR-AXIAL;10UH,10%,3070	
....4	LV601	2701-000115	INDUCTOR-AXIAL;10UH,10%,3070	
....4	L284	2701-000116	INDUCTOR-AXIAL;10UH,10%,4298	
....4	LV904	2701-000116	INDUCTOR-AXIAL;10UH,10%,4298	
....4	L424	2701-000142	INDUCTOR-AXIAL;1UH,10%,2534	
....4	L825	2701-000142	INDUCTOR-AXIAL;1UH,10%,2534	
....4	LV701	2701-000142	INDUCTOR-AXIAL;1UH,10%,2534	
....4	LV702	2701-000142	INDUCTOR-AXIAL;1UH,10%,2534	
....4	LV703	2701-000142	INDUCTOR-AXIAL;1UH,10%,2534	
....4	LV201	2701-000143	INDUCTOR-AXIAL;1UH,10%,3070	
....4	LV202	2701-000143	INDUCTOR-AXIAL;1UH,10%,3070	
....4	LV203	2701-000143	INDUCTOR-AXIAL;1UH,10%,3070	
....4	LV901	2701-000143	INDUCTOR-AXIAL;1UH,10%,3070	
....4	LV905	2701-000158	INDUCTOR-AXIAL;22UH,10%,2534	
....4	LV205	2701-000159	INDUCTOR-AXIAL;22UH,10%,4298	
....4	LV704	2701-000168	INDUCTOR-AXIAL;3.3UH,5%,2534	
....4	LV705	2701-000168	INDUCTOR-AXIAL;3.3UH,5%,2534	
....4	L607	2701-000177	INDUCTOR-AXIAL;33UH,10%,2534	
....4	L608	2701-000177	INDUCTOR-AXIAL;33UH,10%,2534	
....4	L705	2701-000177	INDUCTOR-AXIAL;33UH,10%,2534	
....4	L706	2701-000177	INDUCTOR-AXIAL;33UH,10%,2534	
....4	LV206	2701-000184	INDUCTOR-AXIAL;4.7UH,10%,2534	
....4	L303B	2701-001040	INDUCTOR-AXIAL;10UH,10%,4514	
....4	LV253	2702-001094	INDUCTOR-RADIAL;10uH,10%,4x6mm	
....4	F101	2901-000297	FILTER-EMI ON BOARD;-,3A,-,-,3.5x5,TP,-	
....4	F101	2901-000297	FILTER-EMI ON BOARD;-,3A,-,-,3.5x5,TP,-	
....4	L2514	3301-000287	BEAD-AXIAL;,3.5x1.0x6.0mm,3000mA,TP,,,50	
....4	L2514	3301-000287	BEAD-AXIAL;,3.5x1.0x6.0mm,3000mA,TP,,,50	
....4	L2514	3301-000287	BEAD-AXIAL;,3.5x1.0x6.0mm,3000mA,TP,,,50	
....4	L2514	3301-000287	BEAD-AXIAL;,3.5x1.0x6.0mm,3000mA,TP,,,50	
....4	L2514	3301-000287	BEAD-AXIAL;,3.5x1.0x6.0mm,3000mA,TP,,,50	
....4	L2514	3301-000287	BEAD-AXIAL;,3.5x1.0x6.0mm,3000mA,TP,,,50	
....4	L2514	3301-000287	BEAD-AXIAL;,3.5x1.0x6.0mm,3000mA,TP,,,50	
....4	L2514	3301-000287	BEAD-AXIAL;,3.5x1.0x6.0mm,3000mA,TP,,,50	
....4	L2514	3301-000287	BEAD-AXIAL;,3.5x1.0x6.0mm,3000mA,TP,,,50	
....4	L2514	3301-000287	BEAD-AXIAL;,3.5x1.0x6.0mm,3000mA,TP,,,50	
....4	L2514	3301-000287	BEAD-AXIAL;,3.5x1.0x6.0mm,3000mA,TP,,,50	
....4	F801A	3602-000114	FUSE-HOLDER;-,-,30mohm	
....4	F801B	3602-000114	FUSE-HOLDER;-,-,30mohm	
....4	CN906	3711-002644	CONNECTOR-HEADER;BOX,5P,1R,2.5mm,STRAIGH	
....4	CN906	3711-002645	CONNECTOR-HEADER;BOX,6P,1R,2.5mm,STRAIGH	
....4	CN906	3711-002647	CONNECTOR-HEADER;BOX,8P,1R,2.5mm,STRAIGH	
....4	EL501	6042-000001	EYELET;ID2.2,OD2.7,L3.1,NI+SN,BSP3-1/2H	S.N.A
....4	EL502	6042-000001	EYELET;ID2.2,OD2.7,L3.1,NI+SN,BSP3-1/2H	S.N.A
....4	EL800	6042-000001	EYELET;ID2.2,OD2.7,L3.1,NI+SN,BSP3-1/2H	S.N.A

Level	Loc.No.	Code No.	Description;Specification	Remark
....4	EL801	6042-000001	EYELET;ID2.2,OD2.7,L3.1,NI+SN,BSP3-1/2H	S.N.A
....4	EL802	6042-000001	EYELET;ID2.2,OD2.7,L3.1,NI+SN,BSP3-1/2H	S.N.A
....4	EL803	6042-000001	EYELET;ID2.2,OD2.7,L3.1,NI+SN,BSP3-1/2H	S.N.A
....4	EL804	6042-000001	EYELET;ID2.2,OD2.7,L3.1,NI+SN,BSP3-1/2H	S.N.A
....4	EL805	6042-000001	EYELET;ID2.2,OD2.7,L3.1,NI+SN,BSP3-1/2H	S.N.A
....4	EL806	6042-000001	EYELET;ID2.2,OD2.7,L3.1,NI+SN,BSP3-1/2H	S.N.A
....4	EL807	6042-000001	EYELET;ID2.2,OD2.7,L3.1,NI+SN,BSP3-1/2H	S.N.A
....4	EL808	6042-000001	EYELET;ID2.2,OD2.7,L3.1,NI+SN,BSP3-1/2H	S.N.A
....4	EL809	6042-000001	EYELET;ID2.2,OD2.7,L3.1,NI+SN,BSP3-1/2H	S.N.A
....4	EL811	6042-000001	EYELET;ID2.2,OD2.7,L3.1,NI+SN,BSP3-1/2H	S.N.A
....4	EL812	6042-000001	EYELET;ID2.2,OD2.7,L3.1,NI+SN,BSP3-1/2H	S.N.A
....4	EL842	6042-000001	EYELET;ID2.2,OD2.7,L3.1,NI+SN,BSP3-1/2H	S.N.A
....4	EL857	6042-000001	EYELET;ID2.2,OD2.7,L3.1,NI+SN,BSP3-1/2H	S.N.A
....4	EL868	6042-000001	EYELET;ID2.2,OD2.7,L3.1,NI+SN,BSP3-1/2H	S.N.A
....4	EY600	6042-000002	EYELET;ID1.5,OD2,L2.8,NI+SN,BSP3-1/2H	S.N.A
....4	EY601	6042-000002	EYELET;ID1.5,OD2,L2.8,NI+SN,BSP3-1/2H	S.N.A
....4	EY602	6042-000002	EYELET;ID1.5,OD2,L2.8,NI+SN,BSP3-1/2H	S.N.A
....4	EY603	6042-000002	EYELET;ID1.5,OD2,L2.8,NI+SN,BSP3-1/2H	S.N.A
....4	EY800	6042-000002	EYELET;ID1.5,OD2,L2.8,NI+SN,BSP3-1/2H	S.N.A
....4	EY801	6042-000002	EYELET;ID1.5,OD2,L2.8,NI+SN,BSP3-1/2H	S.N.A
....4	EY802	6042-000002	EYELET;ID1.5,OD2,L2.8,NI+SN,BSP3-1/2H	S.N.A
....4	EY803	6042-000002	EYELET;ID1.5,OD2,L2.8,NI+SN,BSP3-1/2H	S.N.A
....4	EY804	6042-000002	EYELET;ID1.5,OD2,L2.8,NI+SN,BSP3-1/2H	S.N.A
....4	EY805	6042-000002	EYELET;ID1.5,OD2,L2.8,NI+SN,BSP3-1/2H	S.N.A
....4	EY806	6042-000002	EYELET;ID1.5,OD2,L2.8,NI+SN,BSP3-1/2H	S.N.A
....4	EY807	6042-000002	EYELET;ID1.5,OD2,L2.8,NI+SN,BSP3-1/2H	S.N.A
....4	EY808	6042-000002	EYELET;ID1.5,OD2,L2.8,NI+SN,BSP3-1/2H	S.N.A
....4	EY809	6042-000002	EYELET;ID1.5,OD2,L2.8,NI+SN,BSP3-1/2H	S.N.A
....4	EY810	6042-000002	EYELET;ID1.5,OD2,L2.8,NI+SN,BSP3-1/2H	S.N.A
....4	EY811	6042-000002	EYELET;ID1.5,OD2,L2.8,NI+SN,BSP3-1/2H	S.N.A
....4	EY812	6042-000002	EYELET;ID1.5,OD2,L2.8,NI+SN,BSP3-1/2H	S.N.A
....4	EY813	6042-000002	EYELET;ID1.5,OD2,L2.8,NI+SN,BSP3-1/2H	S.N.A
....4	EY814	6042-000002	EYELET;ID1.5,OD2,L2.8,NI+SN,BSP3-1/2H	S.N.A
....4	EY815	6042-000002	EYELET;ID1.5,OD2,L2.8,NI+SN,BSP3-1/2H	S.N.A
....4	EY816	6042-000002	EYELET;ID1.5,OD2,L2.8,NI+SN,BSP3-1/2H	S.N.A
....4	EY817	6042-000002	EYELET;ID1.5,OD2,L2.8,NI+SN,BSP3-1/2H	S.N.A
....4	EY818	6042-000002	EYELET;ID1.5,OD2,L2.8,NI+SN,BSP3-1/2H	S.N.A
....4	EY819	6042-000002	EYELET;ID1.5,OD2,L2.8,NI+SN,BSP3-1/2H	S.N.A
....4	EY821	6042-000002	EYELET;ID1.5,OD2,L2.8,NI+SN,BSP3-1/2H	S.N.A
....4	EY822	6042-000002	EYELET;ID1.5,OD2,L2.8,NI+SN,BSP3-1/2H	S.N.A
....4	EY823	6042-000002	EYELET;ID1.5,OD2,L2.8,NI+SN,BSP3-1/2H	S.N.A
....4	EY824	6042-000002	EYELET;ID1.5,OD2,L2.8,NI+SN,BSP3-1/2H	S.N.A
....4	EY826	6042-000002	EYELET;ID1.5,OD2,L2.8,NI+SN,BSP3-1/2H	S.N.A
....4	EY827	6042-000002	EYELET;ID1.5,OD2,L2.8,NI+SN,BSP3-1/2H	S.N.A
....4	EY828	6042-000002	EYELET;ID1.5,OD2,L2.8,NI+SN,BSP3-1/2H	S.N.A
....4	EY829	6042-000002	EYELET;ID1.5,OD2,L2.8,NI+SN,BSP3-1/2H	S.N.A
....4	EY830	6042-000002	EYELET;ID1.5,OD2,L2.8,NI+SN,BSP3-1/2H	S.N.A
....4	EY831	6042-000002	EYELET;ID1.5,OD2,L2.8,NI+SN,BSP3-1/2H	S.N.A
....4	EY832	6042-000002	EYELET;ID1.5,OD2,L2.8,NI+SN,BSP3-1/2H	S.N.A
....4	EY833	6042-000002	EYELET;ID1.5,OD2,L2.8,NI+SN,BSP3-1/2H	S.N.A
....4	EY834	6042-000002	EYELET;ID1.5,OD2,L2.8,NI+SN,BSP3-1/2H	S.N.A
....4	EY835	6042-000002	EYELET;ID1.5,OD2,L2.8,NI+SN,BSP3-1/2H	S.N.A
....4	EY836	6042-000002	EYELET;ID1.5,OD2,L2.8,NI+SN,BSP3-1/2H	S.N.A
....4	EY837	6042-000002	EYELET;ID1.5,OD2,L2.8,NI+SN,BSP3-1/2H	S.N.A
....4	EY838	6042-000002	EYELET;ID1.5,OD2,L2.8,NI+SN,BSP3-1/2H	S.N.A
....4	EY839	6042-000002	EYELET;ID1.5,OD2,L2.8,NI+SN,BSP3-1/2H	S.N.A
....4	EY840	6042-000002	EYELET;ID1.5,OD2,L2.8,NI+SN,BSP3-1/2H	S.N.A
....4	EY841	6042-000002	EYELET;ID1.5,OD2,L2.8,NI+SN,BSP3-1/2H	S.N.A
....4	EY842	6042-000002	EYELET;ID1.5,OD2,L2.8,NI+SN,BSP3-1/2H	S.N.A
....4	EY843	6042-000002	EYELET;ID1.5,OD2,L2.8,NI+SN,BSP3-1/2H	S.N.A
....4	EY844	6042-000002	EYELET;ID1.5,OD2,L2.8,NI+SN,BSP3-1/2H	S.N.A
....4	EY845	6042-000002	EYELET;ID1.5,OD2,L2.8,NI+SN,BSP3-1/2H	S.N.A
....4	EY846	6042-000002	EYELET;ID1.5,OD2,L2.8,NI+SN,BSP3-1/2H	S.N.A
....4	EY847	6042-000002	EYELET;ID1.5,OD2,L2.8,NI+SN,BSP3-1/2H	S.N.A
....4	EY848	6042-000002	EYELET;ID1.5,OD2,L2.8,NI+SN,BSP3-1/2H	S.N.A
....4	EY849	6042-000002	EYELET;ID1.5,OD2,L2.8,NI+SN,BSP3-1/2H	S.N.A
....4	EY850	6042-000002	EYELET;ID1.5,OD2,L2.8,NI+SN,BSP3-1/2H	S.N.A
....4	EY851	6042-000002	EYELET;ID1.5,OD2,L2.8,NI+SN,BSP3-1/2H	S.N.A
....4	EY852	6042-000002	EYELET;ID1.5,OD2,L2.8,NI+SN,BSP3-1/2H	S.N.A
....4	EY853	6042-000002	EYELET;ID1.5,OD2,L2.8,NI+SN,BSP3-1/2H	S.N.A
....4	EY854	6042-000002	EYELET;ID1.5,OD2,L2.8,NI+SN,BSP3-1/2H	S.N.A
....4	EY855	6042-000002	EYELET;ID1.5,OD2,L2.8,NI+SN,BSP3-1/2H	S.N.A
....4	EY856	6042-000002	EYELET;ID1.5,OD2,L2.8,NI+SN,BSP3-1/2H	S.N.A
....4	EY857	6042-000002	EYELET;ID1.5,OD2,L2.8,NI+SN,BSP3-1/2H	S.N.A
....4	EY858	6042-000002	EYELET;ID1.5,OD2,L2.8,NI+SN,BSP3-1/2H	S.N.A
....4	EY859	6042-000002	EYELET;ID1.5,OD2,L2.8,NI+SN,BSP3-1/2H	S.N.A
....4	EY862	6042-000002	EYELET;ID1.5,OD2,L2.8,NI+SN,BSP3-1/2H	S.N.A
....4	EY863	6042-000002	EYELET;ID1.5,OD2,L2.8,NI+SN,BSP3-1/2H	S.N.A
....4	EY864	6042-000002	EYELET;ID1.5,OD2,L2.8,NI+SN,BSP3-1/2H	S.N.A
....4	EY865	6042-000002	EYELET;ID1.5,OD2,L2.8,NI+SN,BSP3-1/2H	S.N.A
....4	EY866	6042-000002	EYELET;ID1.5,OD2,L2.8,NI+SN,BSP3-1/2H	S.N.A
....4	EY867	6042-000002	EYELET;ID1.5,OD2,L2.8,NI+SN,BSP3-1/2H	S.N.A
....4	EY869	6042-000002	EYELET;ID1.5,OD2,L2.8,NI+SN,BSP3-1/2H	S.N.A
....4	EY870	6042-000002	EYELET;ID1.5,OD2,L2.8,NI+SN,BSP3-1/2H	S.N.A
....4	EY871	6042-000002	EYELET;ID1.5,OD2,L2.8,NI+SN,BSP3-1/2H	S.N.A
....4	EY872	6042-000002	EYELET;ID1.5,OD2,L2.8,NI+SN,BSP3-1/2H	S.N.A
....4	EY873	6042-000002	EYELET;ID1.5,OD2,L2.8,NI+SN,BSP3-1/2H	S.N.A
....4	EY874	6042-000002	EYELET;ID1.5,OD2,L2.8,NI+SN,BSP3-1/2H	S.N.A
....4	EY875	6042-000002	EYELET;ID1.5,OD2,L2.8,NI+SN,BSP3-1/2H	S.N.A
....4	EY876	6042-000002	EYELET;ID1.5,OD2,L2.8,NI+SN,BSP3-1/2H	S.N.A
....4	EY877	6042-000002	EYELET;ID1.5,OD2,L2.8,NI+SN,BSP3-1/2H	S.N.A
....4	EY878	6042-000002	EYELET;ID1.5,OD2,L2.8,NI+SN,BSP3-1/2H	S.N.A
....4	EY879	6042-000002	EYELET;ID1.5,OD2,L2.8,NI+SN,BSP3-1/2H	S.N.A
....4	EY880	6042-000002	EYELET;ID1.5,OD2,L2.8,NI+SN,BSP3-1/2H	S.N.A
....4	EY881	6042-000002	EYELET;ID1.5,OD2,L2.8,NI+SN,BSP3-1/2H	S.N.A
....4	EY882	6042-000002	EYELET;ID1.5,OD2,L2.8,NI+SN,BSP3-1/2H	S.N.A
....4	EY883	6042-000002	EYELET;ID1.5,OD2,L2.8,NI+SN,BSP3-1/2H	S.N.A
....4	LX085	AA27-90001B	COIL-SPARK,GAP;S-23,1.5KV,-,-,-,-,-,-,-,-,	
....4	LX085	AA27-90001B	COIL-SPARK,GAP;S-23,1.5KV,-,-,-,-,-,-,-,-,	
....4	LX085	AA27-90001B	COIL-SPARK,GAP;S-23,1.5KV,-,-,-,-,-,-,-,-,	
....4	LX085	AA27-90001B	COIL-SPARK,GAP;S-23,1.5KV,-,-,-,-,-,-,-,-,	
....4	FT401	AA37-00001A	CONNECTOR-FBT FIX PIN;JM-3500,CPTTV,0.36	
....4	FT402	AA37-00001A	CONNECTOR-FBT FIX PIN;JM-3500,CPTTV,0.36	
....4	0	AA41-01024D	PCB MAIN;CT-29K10G,1,D,FR-1,245*330*1.6,	S.N.A
....4	GT404	AA60-40014A	PIN-GT,ASSY;AUTO	S.N.A
....4	GT406	AA60-40014A	PIN-GT,ASSY;AUTO	S.N.A
....4	GT501	AA60-40014A	PIN-GT,ASSY;AUTO	S.N.A
....4	GT502	AA60-40014A	PIN-GT,ASSY;AUTO	S.N.A
....4	GT503	AA60-40014A	PIN-GT,ASSY;AUTO	S.N.A
....4	GT801	AA60-40014A	PIN-GT,ASSY;AUTO	S.N.A
....4	GT802	AA60-40014A	PIN-GT,ASSY;AUTO	S.N.A
....4	GT803	AA60-40014A	PIN-GT,ASSY;AUTO	S.N.A
....4	GT804	AA60-40014A	PIN-GT,ASSY;AUTO	S.N.A
....4	GT805	AA60-40014A	PIN-GT,ASSY;AUTO	S.N.A
....4	GT806	AA60-40014A	PIN-GT,ASSY;AUTO	S.N.A
....4	GTT01	AA60-40014A	PIN-GT,ASSY;AUTO	S.N.A
....4	GTT02	AA60-40014A	PIN-GT,ASSY;AUTO	S.N.A
....4	GTT04	AA60-40014A	PIN-GT,ASSY;AUTO	S.N.A
....4	GTT06	AA60-40014A	PIN-GT,ASSY;AUTO	S.N.A
..2	T0098	AA94-14788A	ASSY PCB MISC-TACT S/W,CONTROL;CL29M21MQ	
...3		0202-001366	SOLDER-WIRE FLUX;-,RS60S,D1.2,63Sn/37Pb,	S.N.A
...3	LDY02	0601-000262	LED;ROUND,RED,5mm,700nm	
...3	D0254	AA32-00012A	MODULE REMOCON;ORC-50HF2,38KHZ,940NM,MES	
...3	T0245	AA39-00385A	LEAD CONNECTOR-ASSY;GOLR RUSH,UL1007#26,	
...3	T0245	AA39-20050A	LEAD CONNECTOR-ASSY;,3P,200,YBNH250-03,Y	
...3		AA97-15540A	ASSY AUTO;CL21M21PQUXXAZ,KS7A	S.N.A
....4	CISS	0401-000005	DIODE-SWITCHING;1N4148,75V,150MA,DO-35,T	
....4	CISS	0401-000005	DIODE-SWITCHING;1N4148,75V,150MA,DO-35,T	
....4	DZ016	0403-000508	DIODE-ZENER;MTZJ5.6B,5.45-5.73V,500MW,DO	
....4	DZ016	0403-000508	DIODE-ZENER;MTZJ5.6B,5.45-5.73V,500MW,DO	
....4	R125	2001-000007	R-CARBON;3KOHM,5%,1/8W,AA,TP,1.8X3.2MM	
....4	R125	2001-000009	R-CARBON;20KOHM,5%,1/8W,AA,TP,1.8X3.2MM	
....4	R075	2001-000020	R-CARBON(S);22OHM,5%,1/2W,AA,TP,2.4X6.4M	
....4	R125	2001-000281	R-CARBON;100OHM,5%,1/8W,AA,TP,1.8X3.2MM	
....4	R125	2001-000577	R-CARBON;2KOHM,5%,1/8W,AA,TP,1.8X3.2MM	
....4	R125	2001-000878	R-CARBON;6.2KOHM,5%,1/8W,AA,TP,1.8X3.2MM	
....4	C701	2401-002291	C-AL;47uF,20%,16V,GP,TP,6.3x5,5	
....4	SW07	3404-000243	SWITCH-TACT;15V,20mA,160gf+-50gf,6x3.4mm	
....4	SWY02	3404-000243	SWITCH-TACT;15V,20mA,160gf+-50gf,6x3.4mm	
....4	SWY03	3404-000243	SWITCH-TACT;15V,20mA,160gf+-50gf,6x3.4mm	
....4	SWY04	3404-000243	SWITCH-TACT;15V,20mA,160gf+-50gf,6x3.4mm	
....4	SWY05	3404-000243	SWITCH-TACT;15V,20mA,160gf+-50gf,6x3.4mm	
....4	SWY06	3404-000243	SWITCH-TACT;15V,20mA,160gf+-50gf,6x3.4mm	
....4	0	AA41-01085A	PCB-TACT SWITCH;M21,FR-1,1,A,245*245*1.6	S.N.A

ASSY FIXING

Level	Loc.No.	Code No.	Description;Specification	Remark
1		AA91-08458D	ASSY FIXING;CL21M21PQUXXAZ,KS7A	S.N.A
..2		3811-001609	WIRE-PVC CU;BCWA,300V,ROLL,-,#22,BLK	S.N.A
⚠ ..2	T0268	AA39-10006X	CBF-POWER CORD;-,KKP419C,KLCE-2F,2.286MT	
..2	T0245	AA39-20010B	LEAD CONNECTOR-ASSY;,1P,500,YFH800-01,S,	

Level	Loc.No.	Code No.	Description;Specification	Remark
..2	T0245	AA39-20010D	LEAD CONNECTOR-ASSY;,1P,400,YFH800-01,S,	
..2	T0010	AA61-20284A	HOLDER;P-CORD,PP,-,-,-,BLK,VO,KE-002	S.N.A
..2		AA65-30009A	CLAMPER CORE-FBT;-,ABS,V0,-,BLK,-	S.N.A
..2		AA65-30018A	CLAMPER CORE-WIRE;DONG-A,NYLON-66,-,-,-,	S.N.A
..2	CLAMP	AA65-30104C	CLAMPER CORE-WIRE;ALL MODEL,NYLON 66,V2,	S.N.A

ASSY P/MATERIAL

1		AA92-10287A	ASSY P/MATERIAL;21M21	S.N.A
..2		6902-000001	BAG AIR;LDPE,T0.2,L1800,W1000,TRP,,,LDPE	S.N.A
..2		6902-000005	BAG PE;HDPE/NITRON/HDPE,T0.015/T0.5/T0.0	S.N.A
..2		6902-000061	BAG AIR;LDPE,T0.2,L1000,W500,TRP,,,	S.N.A
..2	T0214	AA60-40006A	PIN-STAPLE;AUTO,33X17.8X2.4,H18,33X17.8X	S.N.A

ASSY ACCESSORY

1	M0045	AA92-10288A	ASSY ACCESSORY;CL29M21MQUXXAZ,KS7A	S.N.A
..2		6902-000009	BAG PE;HDPE,T0.03,L400,W240,TRP,8,2,PE M	S.N.A
..2	0	AA68-03242B	MANUAL-WARRANTY CARD;TH-ENG,SAFETY GUIDE	S.N.A
..2	T0074	AA59-00325E	REMOCON;GOLDRUSH,TM76A,KS7A,52MX,46,G614	
...3	TM76C	AA83-00097A	CKD-CASE TOP,C;TM76A,SEDA,AA59-00325C	S.N.A
...3	TM76	AA83-00098A	CKD-CASE BOTTOM;TM76A,SEDA,AA59-00325A	S.N.A
...3	TM76	AA83-00107A	CKD-DOOR COVER;TM76A,SEDA,AA59-00325A	S.N.A
...3	TM76	AA83-00114A	CKD-BATTERY-COVER;TM76A,SEDA,AA59-00325A	S.N.A
...3	TM76	AA83-00115A	CKD-WINDOW-RMC;TM76A,SEDA,AA59-00325A	S.N.A
...3	TM76E	AA83-00118A	CKD-INLAY PC,E;TM76A,SEDA,AA59-00325E	S.N.A
...3	TM76C	AA83-00120A	CKD-RUBBER-TOP,A;TM76A,SEDA,AA59-00325A	S.N.A
...3	TM76	AA83-00122A	CKD-SCREW-TH;TM76A,SEDA,AA59-00325A	S.N.A
...3	TM76C	AA83-00123A	CKD-INLAY-BACK,C;TM76A,SEDA,AA59-00325C	S.N.A
...3	TM76	AA83-00125A	CKD-RUBBER-BOTTOM;TM76A,SEDA,AA59-00325A	S.N.A
...3	TM76	AA83-00126A	CKD-SPRING-PLUS;TM76A,SEDA,AA59-00325A	S.N.A
...3	TM76	AA83-00127A	CKD-SPRING-MINUS;TM76A,SEDA,AA59-00325A	S.N.A
...3	TM76	AA83-00128A	CKD-SPRING-COMMON;TM76A,SEDA,AA59-00325A	S.N.A
...3	TM76	AA83-00139A	CKD-IR-LED;AA59-00325A,SI-5312H	S.N.A
...3	TM76	AA83-00140A	CKD-PCB;AA59-00325A,FR1-SILVER	S.N.A
...3	TM76	AA83-00141A	CKD-IC;AA59-00325A,Z86L88-52MX	S.N.A
...3	TM76	AA83-00142A	CKD-CHIP-RESISTOR;AA59-00325A,2012 5% T/	S.N.A
...3	TM76	AA83-00143A	CKD-CHIP-CAPACITOR;AA59-00325A,CS2012Y5N	S.N.A
...3	TM76	AA83-00144A	CKD-CHIP-RESISTOR;AA59-00325A,2012 5% T/	S.N.A
...3	TM76	AA83-00145A	CKD-CHIP-RESISTOR;AA59-00325A,2012 5%T/R	S.N.A
...3	TM76	AA83-00146A	CKD-CHIP-TRANSISTOR;AA59-00325A,STC3265Y	S.N.A
...3	TM76	AA83-00147A	CKD-CHIP-DIODE;AA59-00325A,BAV70	S.N.A
...3	TM76	AA83-00148A	CKD-ELE CONDENSOR;AA59-00325A,SG 1 6 V 4	S.N.A
...3	TM76	AA83-00149A	CKD-RESONATOR;AA59-00325A,Z T T 8 . 0 0M	S.N.A
...3	TM76	AA83-00150A	CKD-CHIP-LED;AA59-00325A,C - 1 9 0 C K T	S.N.A
...3	TM76	AA83-00151A	CKD-CHIP-LED;AA59-00325A,LTST-190GKT	S.N.A
...3	TM76	AA83-00153A	CKD-INDICATOR-LED;TM76A,SEDA,AA59-00325A	S.N.A
...3	PE-BAG	AA83-00154A	CKD-PE-BAG;TM76A,SEDA,AA59-00325A	S.N.A
...3	LABEL	AA83-00157A	CKD-LABEL QC;TM76A,SEDA,AA59-00325A	S.N.A
..2	T0511	AA68-03503A	MANUAL USERS;CL34Z6,SAMSUNG,BP,BRAZIL,MO	S.N.A

Yon can search for the updated part code through ITSELF web site.
URL:http://itself.sec.samsung.co.kr

5-2 CL21N11MQUXXAZ

Level	Loc.No.	Code No.	Description;Specification	Remark
			ASSY COVER FRONT	
1	M0001	AA90-04995H	ASSY COVER FRONT;CL21N11MQUXXAZ(SEDA)	S.N.A
..2	CCM1	AA60-10050R	SCREW-MACHINE;-,SWRCH18A,M5,L31.5,HH,+,W	S.N.A
..2	T0081	AA60-10050T	SCREW-TAPPING;-,SWRCH18A,M4,L20,RH,+,2S,	S.N.A
..2	T0382	BP61-00495C	HOLDER-CARE;PJT,ACRYL-FOAM,T0.25,W30.0mm	S.N.A
..2	T0081	6003-001026	SCREW-TAPTITE;RH,+,B,M4,L15,ZPC(BLK),SWR	S.N.A
..2	T0003	AA96-02056G	ASSY COVER P-FRONT;21N11,HB,G4309,SV012P	S.N.A
...3	T0082	3001-001071	SPEAKER;5W,8OHM,90DB,180HZ	
...3	T0081	6003-001019	SCREW-TAPTITE;RH,+,B,M4,L12,ZPC(BLK),SWR	S.N.A
...3	T0081	6003-001026	SCREW-TAPTITE;RH,+,B,M4,L15,ZPC(BLK),SWR	S.N.A
...3	T0081	6003-001026	SCREW-TAPTITE;RH,+,B,M4,L15,ZPC(BLK),SWR	S.N.A
...3	T0069	AA60-00091G	SPACER-FELT;-,FELT,200X10,-,-,BLK,T0.5,-	S.N.A
...3	T0069	AA60-00091R	SPACER-FELT;,FELT,250X10,,,BLK,T0.5,,	S.N.A
...3	T0607	AA61-40113A	STOPPER-PCB;501H,HIPS,-,-,HB,NTR,-	S.N.A
...3	CIS7	AA61-60003J	SPRING ETC-CS;-,SUS304,-,-,OD6,N7,OD6,-,	S.N.A
...3	M0112	AA63-00828B	COVER-FRONT;21N11 330(SEDA),HIPS,G4309,S	
....4		AA61-40010A	BOSS-WING;-,HIPS,-,-,-,NTR,HB	S.N.A
...3	T0299	AA64-03652A	WINDOW-RMC LED;17N11,PC,CLEAR	S.N.A
...3	T0023	AA64-04138A	KNOB-POWER;21N11(SEDA),ABS,HB,G3676,SVM3	S.N.A
...3	T0022	AA64-04139A	KNOB-CONTROL;21N11(SEDA),ABS,HB,G3676,SV	S.N.A
...3	T0057	AA64-70123A	BADGE-BRAND;NEW,AL,L50,FLAT,SILVER,SAMSU	S.N.A
...3		AA65-00011C	CLAMPER CORE-WIRE;ALL MODEL,NYLON 66,V2,	S.N.A
...3		AA65-30105A	CLAMPER CORE-WIRE;ALL MODEL,NYLON 66,V2,	S.N.A
...3	T0382	BP61-00509C	HOLDER-CARE;PJT,ACRYL-FOAM,T0.25,W20.0mm	S.N.A
...3	M2893	AA39-00369A	LEAD CONNECTOR;UW17J11,UL1007#22,UL/CSA,	
			ASSY COVER REAR	
1	M0002	AA90-04996E	ASSY COVER REAR;21N11,HB,G4309,RCA3P+DVD	S.N.A
..2	T0069	AA60-00091J	SPACER-FELT;-,FELT,330X10,-,-,BLK,T0.5,-	S.N.A
..2	M0006	AA63-00829A	COVER-REAR;21N11 330(SEDA),HB,G4309	
..2		AA64-03974E	INLAY-BACK;D2,PS,T0.3,SHEET,BLK,RCA9P+DV	S.N.A
..2	T0214	AA65-30008A	CLAMPER CORE-CORD;-,PE,HB,-,BLK,-	S.N.A
			ASSY CPT	
1	T0521	AA91-07326E	ASSY CPT;21 SDI,0MG,A51QDX993X	S.N.A
⚠..2	T0063	AA03-00403A	CRT COLOR;A51QDX993X,0MG,1.75MH,18MH,3.1	
..2	T0079	AA27-00002A	MAGNET CONVERGENCE;JH291-11D,29.1MM	
..2	T0089	AA27-00256A	COIL DEGAUSSING;,21IHCH,10%,35TS,4.5OHM,	
..2	T0078	AA27-00324A	DEFLECTION YOKE;,DIF-2192AA(A),S/T,A51QD	
..2		AA63-60028A	SPACER-DY;-,NEOPRENE,-,-,-,BLK,-,-,V0 W1	S.N.A
..2	T0527	AA65-00009B	CLAMPER CORE-D,COIL;21A8,NYLON 66,V0,-,-	S.N.A
..2		AA98-70014D	ASSY TBC WIRE P;TVI,22,NTSC,PAL,1P,UL101	S.N.A
			ASSY CHASSIS	
1	M0017	AA91-08457E	ASSY CHASSIS;CL21N11MQUXXAZ,KS7A	S.N.A
..2	M0014	AA94-14774E	ASSY PCB MAIN;CL21N11MQUXXAZ,KS7A	
...3		0202-001366	SOLDER-WIRE FLUX;-,RS60S,D1.2,63Sn/37Pb,	S.N.A
...3	T0083	0402-001295	DIODE-RECTIFIER;GUR460L-5700,600V,4A,DO-	
...3	T0083	0402-001599	DIODE-RECTIFIER;DGP30L,1500,3A,DO-201AD(	
⚠...3	PC801S	0604-001032	PHOTO-COUPLER;TR,170-260%,300mW,DIP-4,ST	
...3	IC112	1103-001171	IC-EEPROM;24C161,2Kx8,DIP,8P,9.2x6.4mm,2	
...3	T0087	1203-001006	IC-POSI.FIXED REG.;78R05,TO-220F,4P,-,PL	
...3	T0900	1404-001045	THERMISTOR-NTC;4.7ohm,15%,2900K,35.0mW,T	
...3	P803T	1404-001264	THERMISTOR-PTC;4.5OHM,+30/-20%,220V,290V	
...3	C598	2201-000963	C-CERAMIC,DISC;1NF,20%,400V,Y5U,TP,9.5X6	
...3	C598	2201-000987	C-CERAMIC,DISC;2.2NF,20%,400V,Y5U,BK,12.	
⚠...3	C405S	2301-001338	C-FILM,LEAD-OTHER;0.68NF,5%,1.6KV,BK,28X	
⚠...3	CX801S	2306-000318	C-FILM,LEAD-PPF;220NF,20%,250V,BK,-,22.5	
...3	C701	2401-003025	C-AL;330uF,20%,400V,GP,BK,30x40,10	
...3	C701	2401-003633	C-AL;220uF,20%,160V,GP,BK,22x25mm,10	
...3	LV251	2701-000116	INDUCTOR-AXIAL;10UH,10%,4298	
...3	XV201	2801-004019	CRYSTAL-UNIT;20.25MHz,30ppm,28-AAM,13pF,	
...3	ICV101	2904-001196	FILTER-SAW AV;44MHZ,SIP5K,ST,16.2DB,-,42	
...3	SW906	3404-001004	SWITCH-TACT;12V,50mA,160gf,8.4x22.7mm,SP	
⚠...3	RL801S	3501-001053	RELAY-POWER;5VDC,530MW,10000MA,1FORMA,15	
⚠...3	FP801S	3601-000414	FUSE-CARTRIDGE;250V,5A,SLOW-BLOW,GLASS,5	
⚠...3	V999S	3704-001197	SOCKET-CRT;8P+SEN,29PI,22.5PI,NI+SN,-	
...3	CN906	3711-001084	CONNECTOR-HEADER;BOX,8P,1R,2.5mm,STRAIGH	
...3	CN906	3711-003043	CONNECTOR-HEADER;BOX,4P,1R,2.5MM,STRAIGH	
...3	CN906	3711-003241	CONNECTOR-HEADER;BOX,14P,1R,2.5MM,STRAIG	
...3	JAR701	3722-001333	JACK-PIN;9P,3.2mm,NI,BLK,-	
...3	DVD_SVHS	3722-001596	JACK-PIN;3P/9P,3.5mm,NI,BLK(GRN/BLU/RED)	
⚠...3	T401	AA26-50001R	TRANS-HORIZ.DRIVE;-,-,-,80MH,-,-,520UH,-	
...3	L808	AA27-10002L	COIL CHOKE;-,24uH,K,-,2A,-,24UH-K,10x10m	
...3	T0296	AA27-30003L	COIL LINEARITY;-,73uH,DR12x15,0.55mm,-,B	
⚠...3	LX801S	AA29-00012A	FILTER LINE NOISE;CS29A6PF8X/HAC,-,0.1MA	
...3	D0254	AA32-00015A	MODULE REMOCON;FRP-3521H31,38KHZ,940MM,M	
...3	M2893	AA39-00376B	LEAD CONNECTOR;ET-PAL CIS,UL1007/2547#26	
...3	CIS3	AA40-00016A	TUNER-F/S;TDQ-6F/13F2S,NTSC,181CH,45.75M	
...3	GT301	AA60-40012D	PIN-GT,ASSY;T1.6,6-12.5-,NYLON66	S.N.A
⚠...3	D801S	AA96-00276C	ASSY HEAT SINK P;-,BRIDGE ,AA62-00052A,G	S.N.A
....4		0205-001153	GREASE-SILICON;SC102,JAPAN,-	S.N.A
....4	T0083	0402-001399	DIODE-BRIDGE;GSIB660,600V,6A,SIP-4,BK	
....4	T0081	6003-000335	SCREW-TAPTITE;RH,+,2S,M3,L8,ZPC(YEL),SWR	S.N.A
....4		AA60-30003A	WASHER;T1.5,SBHG-1	S.N.A
....4		AA62-00052A	HEAT SINK-PS;-,-,-,SILVER,HOLE 18.5mm, 2	S.N.A
...3	HC801	AA96-00475J	ASSY HEAT SINK P;AA62-00066B,SCREW,FMG-G	S.N.A
....4	H/S	0205-001154	OIL-SILICON;G746,-,-	S.N.A
....4	T0083	0402-001230	DIODE-RECTIFIER;FMG-G2CS,1000V,3A,DO-41,	
....4	T0083	0402-001374	DIODE-RECTIFIER;FFPF06U20S,200V,6A,TO-22	
....4	T0087	1203-001006	IC-POSI.FIXED REG.;78R05,TO-220F,4P,-,PL	
....4	T0087	1203-001543	IC-POSI.FIXED REG.;78R33,TO-220,4P,400MI	
....4	T0081	6003-000334	SCREW-TAPTITE;RH,+,2S,M3,L6,ZPC(YEL),SWR	S.N.A
....4	H/S	AA62-00066B	HEAT SINK;D2,D3,AL ,T1.0,89,70,-,AA62-00	S.N.A
...3	IC301	AA96-00623F	ASSY HEAT SINK P;LA78045,SCREW,AA62-0005	S.N.A
....4	CIS	0205-001154	OIL-SILICON;G746,-,-	S.N.A
....4	T0088	1204-002183	IC-VERTICAL PROCESSO;LA78045,TO220,7P,15	
....4	T0081	6003-000334	SCREW-TAPTITE;RH,+,2S,M3,L6,ZPC(YEL),SWR	S.N.A
....4	CIS	AA62-00056A	HEAT SINK-PS;-,-,T1.0,-,41*35*70,D2,-,-	S.N.A
...3	Q401	AA96-00624J	ASSY HEAT SINK P;SCREW,AA62-00057A,C5936	S.N.A
....4	H/S	0205-001154	OIL-SILICON;G746,-,-	S.N.A
....4	T0090	0502-001264	TR-POWER;2SC5936,NPN,40000mW,TOP-3E,ST,5	
....4	T0081	6003-000333	SCREW-TAPTITE;RH,+,2S,M3,L10,ZPC(YEL),SW	S.N.A
....4	H/S	AA60-30001A	WASHER-PLATE;M3,ID3.5,15X8.5,T1.0,SBHG	S.N.A
....4	H/S	AA62-00057A	HEAT SINK-PS;-,-,T1.0,-,41*20*60,D2,-,-	S.N.A
...3	LDV901	AA96-30001C	ASSY LED GUIDE;-,AA61-50055A,DL-G7RA,-	S.N.A
...3	IC501	AA96-50311N	ASSY HEAT SINK P;AA62-30175D,TDA6109JF,S	S.N.A
....4	T0074	1201-002114	IC-VIDEO AMP;TDA6109JF,SDIP,9P,18.5mm,-,	
....4	T0081	6003-000334	SCREW-TAPTITE;RH,+,2S,M3,L6,ZPC(YEL),SWR	S.N.A
....4	H/S	AA62-30175D	HEAT SINK-PS;-,SECC,T1.0,-,33X15X30 FT-2	S.N.A
⚠...3	IC801S	AA96-50371K	ASSY HEAT SINK P;AA62-30181H,SCREW,STR-X	S.N.A
....4	CIS	0205-001154	OIL-SILICON;G746,-,-	S.N.A
....4	T0081	6003-000333	SCREW-TAPTITE;RH,+,2S,M3,L10,ZPC(YEL),SW	S.N.A
....4	CIS	AA62-30181H	HEAT SINK-ES;-,AL6063 EXTR.,2,WHT,50MM,-	S.N.A
....4	IC063	AA13-00112A	IC HYBRID;STR-X6750B,CS29M6PF,7,-20 to +	
...3		AA97-15543A	ASSY AUTO;CL21N11MQUXXAZ,KS7A	S.N.A
⚠....4	CISS	0401-000005	DIODE-SWITCHING;1N4148,75V,150MA,DO-35,T	
⚠....4	CISS	0401-000005	DIODE-SWITCHING;1N4148,75V,150MA,DO-35,T	
⚠....4	CISS	0401-000005	DIODE-SWITCHING;1N4148,75V,150MA,DO-35,T	
⚠....4	CISS	0401-000005	DIODE-SWITCHING;1N4148,75V,150MA,DO-35,T	
⚠....4	CISS	0401-000005	DIODE-SWITCHING;1N4148,75V,150MA,DO-35,T	
⚠....4	CISS	0401-000005	DIODE-SWITCHING;1N4148,75V,150MA,DO-35,T	
⚠....4	CISS	0401-000005	DIODE-SWITCHING;1N4148,75V,150MA,DO-35,T	
⚠....4	CISS	0401-000005	DIODE-SWITCHING;1N4148,75V,150MA,DO-35,T	
⚠....4	CISS	0401-000006	DIODE-SWITCHING;BAV21,250V,200MA,DO-35,T	
⚠....4	CISS	0401-000006	DIODE-SWITCHING;BAV21,250V,200MA,DO-35,T	
....4	T0083	0402-000132	DIODE-RECTIFIER;1N4004,400V,1A,DO-41,TP	
....4	T0083	0402-000132	DIODE-RECTIFIER;1N4004,400V,1A,DO-41,TP	

Level	Loc.No.	Code No.	Description;Specification	Remark
....4	T0083	0402-000132	DIODE-RECTIFIER;1N4004,400V,1A,DO-41,TP	
....4	T0083	0402-000132	DIODE-RECTIFIER;1N4004,400V,1A,DO-41,TP	
....4	T0083	0402-000254	DIODE-RECTIFIER;RGP10J,600V,1A,DO-41,TP	
....4	T0083	0402-000493	DIODE-RECTIFIER;1R5GU41,400V,1.5A,DO-15L	
....4	T0083	0402-000534	DIODE-RECTIFIER;RG10V,400V,1.2A,DO-201,T	
....4	T0083	0402-000540	DIODE-RECTIFIER;RU20A,600V,1.5A,-,TP	
....4	T0083	0402-000546	DIODE-RECTIFIER;TVR10G,400V,1.0A,DO-41,T

Level	Loc.No.	Code No.	Description;Specification	Remark
....4	R125	2001-000832	R-CARBON;510OHM,5%,1/8W,AA,TP,1.8X3.2MM	
....4	R125	2001-000832	R-CARBON;510OHM,5%,1/8W,AA,TP,1.8X3.2MM	
....4	R125	2001-000832	R-CARBON;510OHM,5%,1/8W,AA,TP,1.8X3.2MM	
....4	R125	2001-000869	R-CARBON;56OHM,5%,1/8W,AA,TP,1.8X3.2MM	
....4	R125	2001-000924	R-CARBON;680OHM,5%,1/8W,AA,TP,1.8X3.2MM	
....4	R125	2001-000969	R-CARBON;75OHM,5%,1/8W,AA,TP,1.8X3.2MM	
....4	R125	2001-000969	R-CARBON;75OHM,5%,1/8W,AA,TP,1.8X3.2MM	
....4	R125	2001-000969	R-CARBON;75OHM,5%,1/8W,AA,TP,1.8X3.2MM	
....4	R125	2001-000969	R-CARBON;75OHM,5%,1/8W,AA,TP,1.8X3.2MM	
....4	R125	2001-000969	R-CARBON;75OHM,5%,1/8W,AA,TP,1.8X3.2MM	
....4	R125	2001-000977	R-CARBON;8.2KOHM,5%,1/8W,AA,TP,1.8X3.2MM	
....4	R125	2001-000995	R-CARBON;820OHM,5%,1/8W,AA,TP,1.8X3.2MM	
....4	R075	2001-001050	R-CARBON(S);1.5KOHM,5%,1/2W,AA,TP,2.4X6.	
....4	R075	2001-001062	R-CARBON(S);10MOHM,5%,1/2W,AA,TP,2.4X6.4	
....4	R075	2001-001079	R-CARBON(S);15OHM,5%,1/2W,AA,TP,2.4X6.4M	
....4	R075	2001-001088	R-CARBON(S);1KOHM,5%,1/2W,AA,TP,2.4X6.4M	
....4	R075	2001-001088	R-CARBON(S);1KOHM,5%,1/2W,AA,TP,2.4X6.4M	
....4	R075	2001-001107	R-CARBON(S);220ohm,5%,1/2W,AA,TP,2.4x6.4	
....4	R075	2001-001114	R-CARBON(S);270OHM,5%,1/2W,AA,TP,2.4X6.4	
....4	R075	2001-001115	R-CARBON(S);27KOHM,5%,1/2W,AA,TP,2.4X6.4	S.N.A
....4	R075	2001-001131	R-CARBON(S);33KOHM,5%,1/2W,AA,TP,2.4X6.4	
....4	R075	2001-001139	R-CARBON(S);39KOHM,5%,1/2W,AA,TP,2.4X6.4	
....4	R075	2001-001150	R-CARBON(S);470KOHM,5%,1/2W,AA,TP,2.4X6.	
....4	R075	2001-001150	R-CARBON(S);470KOHM,5%,1/2W,AA,TP,2.4X6.	
....4	R075	2001-001152	R-CARBON(S);47KOHM,5%,1/2W,AA,TP,2.4X6.4	
....4	R075	2001-001195	R-CARBON(S);82OHM,5%,1/2W,AA,TP,2.4X6.4M	
....4	R0521	2002-001008	R-COMPOSITION;1.8Kohm,10%,1/2W,AA,TP,3.7	
....4	R0521	2002-001008	R-COMPOSITION;1.8Kohm,10%,1/2W,AA,TP,3.7	
....4	R0521	2002-001008	R-COMPOSITION;1.8Kohm,10%,1/2W,AA,TP,3.7	
....4	R0521	2002-001010	R-COMPOSITION;1.8Mohm,5%,1/2W,AA,TP,3.7x	
....4	R0521	2002-001012	R-COMPOSITION;8.2Mohm,5%,1/2W,AA,TP,3.7x	
....4	R426	2003-000540	R-METAL OXIDE(S);1Kohm,5%,2W,AF,TP,4x12m	
....4	R802	2003-000586	R-METAL OXIDE(S);22Kohm,5%,2W,AF,TP,4x12	
....4	R803	2003-000586	R-METAL OXIDE(S);22Kohm,5%,2W,AF,TP,4x12	
....4	R804	2003-000586	R-METAL OXIDE(S);22Kohm,5%,2W,AF,TP,4x12	
....4	R830	2003-000586	R-METAL OXIDE(S);22Kohm,5%,2W,AF,TP,4x12	
....4	R831	2003-000586	R-METAL OXIDE(S);22Kohm,5%,2W,AF,TP,4x12	
....4	R423	2003-001042	R-METAL OXIDE(S);5.6Kohm,5%,2W,AF,TP,3.9	
....4	R309	2003-002009	R-METAL OXIDE(S);390ohm,5%,2W,AF,TP,3.9x	
....4	R310	2003-002009	R-METAL OXIDE(S);390ohm,5%,2W,AF,TP,3.9x	
....4	R835	2003-002020	R-METAL OXIDE(S);56Kohm,5%,2W,AF,TP,3.9x	
....4	R836	2003-002020	R-METAL OXIDE(S);56Kohm,5%,2W,AF,TP,3.9x	
....4	R420	2004-000412	R-METAL;18Kohm,1%,1/4W,AA,TP,2.4x6.4mm	
....4	RV917	2004-000531	R-METAL;20Kohm,1%,1/2W,AA,TP,2.3x6.5mm	
....4	RV914	2004-000680	R-METAL;2Kohm,1%,1/8W,AA,TP,1.8x3.2mm	
....4	RV909	2004-000869	R-METAL;3Kohm,1%,1/8W,AA,TP,1.8x3.2mm	
....4	RV915	2004-000869	R-METAL;3Kohm,1%,1/8W,AA,TP,1.8x3.2mm	
....4	RV916	2004-001126	R-METAL;6.2Kohm,1%,1/8W,AA,TP,1.8x3.2m	
....4	R024	2004-001382	R-METAL(S);13Kohm,1%,1/2W,AA,TP,2.4x6.4m	
....4	R024	2004-001382	R-METAL(S);13Kohm,1%,1/2W,AA,TP,2.4x6.4m	
....4	R024	2004-001390	R-METAL(S);1Kohm,2%,1/2W,AA,TP,2.4x6.4mm	
....4	R024	2004-001397	R-METAL(S);4.7Kohm,1%,1/2W,AA,TP,2.4x6.4	
....4	R024	2004-001402	R-METAL(S);6.8Kohm,1%,1/2W,AA,TP,2.4x6.4	
....4	R024	2004-001891	R-METAL(S);133Kohm,1%,1/2W,AA,TP,2.5x6.5	
....4	R024	2004-001983	R-METAL(S);2.49Kohm,1%,1/2W,AA,TP,2.4x6.	
....4	RV212	2004-002187	R-METAL;619ohm,1%,1/8W,AA,TP,1.8x3.2mm	
....4	RV214	2004-002187	R-METAL;619ohm,1%,1/8W,AA,TP,1.8x3.2mm	
....4	RV216	2004-002187	R-METAL;619ohm,1%,1/8W,AA,TP,1.8x3.2mm	
....4	R024	2004-004045	R-METAL(S);390ohm,1%,1/2W,AA,TP,2.5x6.5m	
....4	R024	2004-005054	R-METAL(S);39KOHM,1%,1/2W,AA,TP,2.4X6.4M	
....4	R834	2008-000205	R-FUSIBLE(S);10ohm,5%,1/2W,AF,TP,2.5x6.5	
....4	R829	2008-000252	R-FUSIBLE(S);0.47ohm,10%,1/2W,AF,TP,2.5x	
....4	R413	2008-000253	R-FUSIBLE(S);0.47ohm,5%,1W,AF,TP,3.9x10m	
....4	R414	2008-000264	R-FUSIBLE(S);1ohm,5%,1W,AF,TP,3.9x10mm	
....4	R825	2008-000284	R-FUSIBLE(S);0.1OHM,10%,2W,AF,TP,3.9X10M	
....4	R827	2008-000284	R-FUSIBLE(S);0.1OHM,10%,2W,AF,TP,3.9X10M	
....4	R304	2008-000290	R-FUSIBLE(S);2.4ohm,5%,2W,AF,TP,3.9x10mm	
....4	R837	2008-000290	R-FUSIBLE(S);2.4ohm,5%,2W,AF,TP,3.9x10mm	
....4	R898	2008-000290	R-FUSIBLE(S);2.4ohm,5%,2W,AF,TP,3.9x10mm	
....4	R418	2008-001023	R-FUSIBLE;3.3ohm,5%,1/2W,AF,TP,2.5x6.5mm	
....4	R303	2008-001076	R-FUSIBLE(S);1.8ohm,5%,2W,AF,TP,3.9x10mm	
....4	R828	2008-001138	R-FUSIBLE;2.4OHM,5%,1W,AF,TP,3.9X10MM	
⚠....4	FD801S	2008-001160	R-PICO FUSIBLE;20mohm,20%,1W,AA,TP,2.3x6	
⚠....4	FD802S	2008-001163	R-PICO FUSIBLE;10mohm,20%,1W,AA,TP,2.3x6	
....4	R0251	2009-000021	R-METAL PLATE;0.33ohm,10%,5W,CL,TP,5x14x	
....4	R0251	2009-000026	R-METAL PLATE;0.15OHM,10%,5W,CL,TP,5X14X	
....4	C598	2201-000132	C-CERAMIC,DISC;0.1NF,10%,500V,Y5P,TP,6.5	

Level	Loc.No.	Code No.	Description;Specification	Remark
....4	C598	2201-000192	C-CERAMIC,DISC;0.01NF,0.25PF,500V,C0G,TP	
....4	C598	2201-000291	C-CERAMIC,DISC;1NF,10%,500V,Y5P,TP,7.5X3	
....4	C598	2201-000332	C-CERAMIC,DISC;2.2NF,20%,250V,Y5U,TP,9X4	
....4	C598	2201-000332	C-CERAMIC,DISC;2.2NF,20%,250V,Y5U,TP,9X4	
....4	C598	2201-000374	C-CERAMIC,DISC;0.22NF,5%,50V,C0G,TP,10.5	
....4	C598	2201-000389	C-CERAMIC,DISC;0.022NF,5%,50V,C0G,TP,5X3	
....4	C598	2201-000389	C-CERAMIC,DISC;0.022NF,5%,50V,C0G,TP,5X3	
....4	C598	2201-000406	C-CERAMIC,DISC;0.27NF,10%,2KV,Y5P,TP,6.3	
....4	C598	2201-000556	C-CERAMIC,DISC;0.47NF,10%,500V,Y5P,TP,5.	
....4	C598	2201-000556	C-CERAMIC,DISC;0.47NF,10%,500V,Y5P,TP,5.	
....4	C598	2201-000556	C-CERAMIC,DISC;0.47NF,10%,500V,Y5P,TP,5.	
....4	C598	2201-000556	C-CERAMIC,DISC;0.47NF,10%,500V,Y5P,TP,5.	
....4	C598	2201-000556	C-CERAMIC,DISC;0.47NF,10%,500V,Y5P,TP,5.	
....4	C598	2201-000558	C-CERAMIC,DISC;0.47NF,10%,50V,Y5P,TP,5X3	
....4	C598	2201-000599	C-CERAMIC,DISC;0.56NF,10%,500V,Y5P,TP,5.	
....4	C598	2201-000599	C-CERAMIC,DISC;0.56NF,10%,500V,Y5P,TP,5.	
....4	C598	2201-000723	C-CERAMIC,DISC;4.7NF,20%,3KV,Y5U,TP,16X5	
....4	C689	2202-000121	C-CERAMIC,MLC-AXIAL;100pF,10%,50V,Y5P,TP	
....4	C689	2202-000121	C-CERAMIC,MLC-AXIAL;100pF,10%,50V,Y5P,TP	
....4	C689	2202-000216	C-CERAMIC,MLC-AXIAL;0.027NF,5%,50V,SL,TP	
....4	C689	2202-000216	C-CERAMIC,MLC-AXIAL;0.027NF,5%,50V,SL,TP	
....4	C689	2202-000231	C-CERAMIC,MLC-AXIAL;0.33NF,10%,50V,Y5P,T	
....4	C689	2202-000231	C-CERAMIC,MLC-AXIAL;0.33NF,10%,50V,Y5P,T	
....4	C689	2202-000231	C-CERAMIC,MLC-AXIAL;0.33NF,10%,50V,Y5P,T	
....4	C689	2202-000231	C-CERAMIC,MLC-AXIAL;0.33NF,10%,50V,Y5P,T	
....4	C689	2202-000231	C-CERAMIC,MLC-AXIAL;0.33NF,10%,50V,Y5P,T	
....4	C689	2202-000231	C-CERAMIC,MLC-AXIAL;0.33NF,10%,50V,Y5P,T	
....4	C689	2202-000231	C-CERAMIC,MLC-AXIAL;0.33NF,10%,50V,Y5P,T	
....4	C689	2202-000231	C-CERAMIC,MLC-AXIAL;0.33NF,10%,50V,Y5P,T	
....4	C689	2202-000243	C-CERAMIC,MLC-AXIAL;33pF,5%,50V,SL,TP,3.	
....4	C689	2202-000243	C-CERAMIC,MLC-AXIAL;33pF,5%,50V,SL,TP,3.	
....4	C689	2202-000243	C-CERAMIC,MLC-AXIAL;33pF,5%,50V,SL,TP,3.	
....4	C689	2202-000796	C-CERAMIC,MLC-AXIAL;1NF,10%,50V,Y5P,TP,3	
....4	C689	2202-000796	C-CERAMIC,MLC-AXIAL;1NF,10%,50V,Y5P,TP,3	
....4	C689	2202-000796	C-CERAMIC,MLC-AXIAL;1NF,10%,50V,Y5P,TP,3	
....4	C689	2202-000796	C-CERAMIC,MLC-AXIAL;1NF,10%,50V,Y5P,TP,3	
....4	C689	2202-000796	C-CERAMIC,MLC-AXIAL;1NF,10%,50V,Y5P,TP,3	
....4	C689	2202-000796	C-CERAMIC,MLC-AXIAL;1NF,10%,50V,Y5P,TP,3	
....4	C689	2202-000796	C-CERAMIC,MLC-AXIAL;1NF,10%,50V,Y5P,TP,3	
....4	C689	2202-000796	C-CERAMIC,MLC-AXIAL;1NF,10%,50V,Y5P,TP,3	
....4	C689	2202-000796	C-CERAMIC,MLC-AXIAL;1NF,10%,50V,Y5P,TP,3	
....4	C689	2202-000796	C-CERAMIC,MLC-AXIAL;1NF,10%,50V,Y5P,TP,3	
....4	C689	2202-000796	C-CERAMIC,MLC-AXIAL;1NF,10%,50V,Y5P,TP,3	
....4	C689	2202-000796	C-CERAMIC,MLC-AXIAL;1NF,10%,50V,Y5P,TP,3	
....4	C689	2202-000796	C-CERAMIC,MLC-AXIAL;1NF,10%,50V,Y5P,TP,3	
....4	C689	2202-000796	C-CERAMIC,MLC-AXIAL;1NF,10%,50V,Y5P,TP,3	
....4	C689	2202-000796	C-CERAMIC,MLC-AXIAL;1NF,10%,50V,Y5P,TP,3	
....4	C689	2202-000796	C-CERAMIC,MLC-AXIAL;1NF,10%,50V,Y5P,TP,3	
....4	C689	2202-000806	C-CERAMIC,MLC-AXIAL;220pF,10%,50V,Y5P,TP	
....4	C689	2202-000806	C-CERAMIC,MLC-AXIAL;220pF,10%,50V,Y5P,TP	
....4	C689	2202-000806	C-CERAMIC,MLC-AXIAL;220pF,10%,50V,Y5P,TP	
....4	C689	2202-000863	C-CERAMIC,MLC-AXIAL;560pF,10%,50V,Y5P,TP	
....4	C689	2202-002009	C-CERAMIC,MLC-AXIAL;100NF,+80-20%,50V,Y5	
....4	C689	2202-002037	C-CERAMIC,MLC-AXIAL;100nF,80-20%,50V,Y5V	
....4	C2560	2301-000192	C-FILM,LEAD-PEF;1nF,5%,50V,TP,5.3x10mm,5	
....4	C2560	2301-000224	C-FILM,LEAD-PEF;22nF,5%,50V,TP,7.4x3.9x1	
....4	C2560	2301-000224	C-FILM,LEAD-PEF;22nF,5%,50V,TP,7.4x3.9x1	
....4	C2560	2301-000224	C-FILM,LEAD-PEF;22nF,5%,50V,TP,7.4x3.9x1	
....4	C2560	2301-000342	C-FILM,LEAD-PEF;2.2nF,5%,50V,TP,7.4x3.9x	
....4	C2560	2301-000356	C-FILM,LEAD-PEF;47nF,5%,50V,TP,7.5x4.0x6	
....4	C2560	2301-000383	C-FILM,LEAD-PEF;10nF,5%,50V,TP,6x7x3.2mm	
....4	C2560	2301-000383	C-FILM,LEAD-PEF;10nF,5%,50V,TP,6x7x3.2mm	
....4	C2560	2301-000383	C-FILM,LEAD-PEF;10nF,5%,50V,TP,6x7x3.2mm	
....4	C2560	2301-000383	C-FILM,LEAD-PEF;10nF,5%,50V,TP,6x7x3.2mm	
....4	C504	2301-001259	C-FILM,LEAD-PPF;100nF,5%,400V,TP,19x8x16	
....4	C807	2301-001342	C-FILM,LEAD-PPF;1.5nF,5%,800V,TP,15x6.5x	
....4	C2560	2305-000285	C-FILM,LEAD-PEF;220NF,5%,100V,TP,10.5X5.	
....4	C2560	2305-000289	C-FILM,LEAD-PEF;220nF,5%,63V,TP,-,5mm	
....4	C2560	2305-000289	C-FILM,LEAD-PEF;220nF,5%,63V,TP,-,5mm	
....4	C2560	2305-000382	C-FILM,LEAD-PEF;4.7nF,5%,400V,TP,-,5mm	
....4	C2560	2305-000411	C-FILM,LEAD-PEF;470nF,5%,50V,TP,7.3x4.8x	
....4	C2560	2305-000411	C-FILM,LEAD-PEF;470nF,5%,50V,TP,7.3x4.8x	
....4	C2560	2305-000411	C-FILM,LEAD-PEF;470nF,5%,50V,TP,7.3x4.8x	
....4	C2560	2305-000411	C-FILM,LEAD-PEF;470nF,5%,50V,TP,7.3x4.8x	
....4	C2560	2305-000412	C-FILM,LEAD-PEF;470nF,5%,63V,TP,-,5mm	
....4	C2560	2305-000412	C-FILM,LEAD-PEF;470nF,5%,63V,TP,-,5mm	
....4	C2560	2305-000665	C-FILM,LEAD-PEF;100nF,5%,63V,TP,7.5x4.0x	
....4	C2560	2305-000665	C-FILM,LEAD-PEF;100nF,5%,63V,TP,7.5x4.0x	
....4	C2560	2305-000665	C-FILM,LEAD-PEF;100nF,5%,63V,TP,7.5x4.0x	

Level	Loc.No.	Code No.	Description;Specification	Remark
....4	C2560	2305-000665	C-FILM,LEAD-PEF;100nF,5%,63V,TP,7.5x4.0x	
....4	C2560	2305-000665	C-FILM,LEAD-PEF;100nF,5%,63V,TP,7.5x4.0x	
....4	C2560	2305-000665	C-FILM,LEAD-PEF;100nF,5%,63V,TP,7.5x4.0x	
....4	C2560	2305-000665	C-FILM,LEAD-PEF;100nF,5%,63V,TP,7.5x4.0x	
....4	C2560	2305-000665	C-FILM,LEAD-PEF;100nF,5%,63V,TP,7.5x4.0x	
....4	C2560	2305-001037	C-FILM,LEAD-PEF;330nF,5%,63V,TP,7.5x5.5x	
....4	CV101	2306-000122	C-FILM,LEAD-PPF;100nF,5%,50V,TP,7.3x4.0x	
....4	C701	2401-000025	C-AL;100uF,20%,16V,GP,TP,6.3x11,5	
....4	C701	2401-000302	C-AL;100uF,20%,25V,GP,TP,6.3x11,5	
....4	C701	2401-000302	C-AL;100uF,20%,25V,GP,TP,6.3x11,5	
....4	C701	2401-000360	C-AL;100uF,20%,50V,GP,TP,8x11.5,5	
....4	C701	2401-000365	C-AL;100uF,20%,50V,WT,TP,10x12.5mm,	
....4	C701	2401-000430	C-AL;10uF,20%,250V,GP,TP,10x16mm,5m	
....4	C701	2401-000430	C-AL;10uF,20%,250V,GP,TP,10x16mm,5m	
....4	C701	2401-000493	C-AL;10uF,20%,50V,LZ,TP,5x11mm,5mm	
....4	C701	2401-000493	C-AL;10uF,20%,50V,LZ,TP,5x11mm,5mm	
....4	C701	2401-000603	C-AL;1UF,20%,50V,GP,TP,5X11,2	
....4	C701	2401-000603	C-AL;1UF,20%,50V,GP,TP,5X11,2	
....4	C701	2401-001026	C-AL;3.3UF,20%,50V,GP,TP,5X11,5	
....4	C701	2401-001397	C-AL;470uF,20%,25V,GP,TP,10x16,5	
....4	C701	2401-001513	C-AL;47uF,20%,16V,WT,TP,5x11,5	
....4	C701	2401-001527	C-AL;47uF,20%,250V,HR,TP,13x25mm,5m	
....4	C701	2401-001914	C-AL;1uF,20%,50V,BP,TP,5x11,5	
....4	C701	2401-001914	C-AL;1uF,20%,50V,BP,TP,5x11,5	
....4	C701	2401-001989	C-AL;4.7uF,20%,50V,BP,TP,5x11,5	
....4	C701	2401-001989	C-AL;4.7uF,20%,50V,BP,TP,5x11,5	
....4	C701	2401-001989	C-AL;4.7uF,20%,50V,BP,TP,5x11,5	
....4	C701	2401-001989	C-AL;4.7uF,20%,50V,BP,TP,5x11,5	
....4	C701	2401-001989	C-AL;4.7uF,20%,50V,BP,TP,5x11,5	
....4	C701	2401-001989	C-AL;4.7uF,20%,50V,BP,TP,5x11,5	
....4	C701	2401-001998	C-AL;1000uF,20%,25V,GP,TP,10x20,5mm	
....4	C701	2401-002075	C-AL;4.7uF,20%,50V,GP,TP,5x11,5	
....4	C701	2401-002075	C-AL;4.7uF,20%,50V,GP,TP,5x11,5	
....4	C701	2401-002075	C-AL;4.7uF,20%,50V,GP,TP,5x11,5	
....4	C701	2401-002144	C-AL;47uF,20%,16V,GP,TP,5x11,5	
....4	C701	2401-002144	C-AL;47uF,20%,16V,GP,TP,5x11,5	
....4	C701	2401-002215	C-AL;2200uF,20%,25V,WT,TP,13x25,5	
....4	C701	2401-002215	C-AL;2200uF,20%,25V,WT,TP,13x25,5	
....4	C701	2401-002215	C-AL;2200uF,20%,25V,WT,TP,13x25,5	
....4	C701	2401-002288	C-AL;470uF,20%,25V,WT,TP,10x20,5	
....4	C701	2401-002463	C-AL;470uF,20%,16V,GP,TP,8x11.5,5	
....4	C701	2401-002594	C-AL;220uF,20%,16V,GP,TP,8x11.5,5	
....4	C701	2401-002597	C-AL;220uF,20%,35V,GP,TP,10x12.5,5	
....4	C701	2401-002619	C-AL;47uF,20%,25V,GP,TP,5x11,5	
....4	C701	2401-002619	C-AL;47uF,20%,25V,GP,TP,5x11,5	
....4	C701	2401-002619	C-AL;47uF,20%,25V,GP,TP,5x11,5	
....4	C701	2401-002619	C-AL;47uF,20%,25V,GP,TP,5x11,5	
....4	C701	2401-002619	C-AL;47uF,20%,25V,GP,TP,5x11,5	
....4	C701	2401-002619	C-AL;47uF,20%,25V,GP,TP,5x11,5	
....4	C701	2401-002619	C-AL;47uF,20%,25V,GP,TP,5x11,5	
....4	C701	2401-002619	C-AL;47uF,20%,25V,GP,TP,5x11,5	
....4	C701	2401-002619	C-AL;47uF,20%,25V,GP,TP,5x11,5	
....4	C701	2401-002619	C-AL;47uF,20%,25V,GP,TP,5x11,5	
....4	C701	2401-002619	C-AL;47uF,20%,25V,GP,TP,5x11,5	
....4	C701	2401-002619	C-AL;47uF,20%,25V,GP,TP,5x11,5	
....4	C701	2401-003553	C-AL;100uF,20%,200V,LZ,TP,16x25,7.5	
....4	C701	2401-003578	C-AL;1000uF,20%,10V,GP,TP,8x20mm,5	
....4	C701	2401-003578	C-AL;1000uF,20%,10V,GP,TP,8x20mm,5	
....4	LV101	2701-000114	INDUCTOR-AXIAL;10UH,10%,2534	
....4	LV252A	2701-000114	INDUCTOR-AXIAL;10UH,10%,2534	
....4	LV252B	2701-000114	INDUCTOR-AXIAL;10UH,10%,2534	
....4	RV101	2701-000114	INDUCTOR-AXIAL;10UH,10%,2534	
....4	RV102	2701-000114	INDUCTOR-AXIAL;10UH,10%,2534	
....4	LV204	2701-000115	INDUCTOR-AXIAL;10UH,10%,3070	
....4	LV601	2701-000115	INDUCTOR-AXIAL;10UH,10%,3070	
....4	L284	2701-000116	INDUCTOR-AXIAL;10UH,10%,4298	
....4	LV904	2701-000116	INDUCTOR-AXIAL;10UH,10%,4298	
....4	L424	2701-000142	INDUCTOR-AXIAL;1UH,10%,2534	
....4	L825	2701-000142	INDUCTOR-AXIAL;1UH,10%,2534	
....4	LV701	2701-000142	INDUCTOR-AXIAL;1UH,10%,2534	
....4	LV702	2701-000142	INDUCTOR-AXIAL;1UH,10%,2534	
....4	LV703	2701-000142	INDUCTOR-AXIAL;1UH,10%,2534	
....4	LV201	2701-000143	INDUCTOR-AXIAL;1UH,10%,3070	
....4	LV202	2701-000143	INDUCTOR-AXIAL;1UH,10%,3070	
....4	LV203	2701-000143	INDUCTOR-AXIAL;1UH,10%,3070	
....4	LV901	2701-000143	INDUCTOR-AXIAL;1UH,10%,3070	
....4	LV905	2701-000158	INDUCTOR-AXIAL;22UH,10%,2534	

Level	Loc.No.	Code No.	Description;Specification	Remark
....4	LV205	2701-000159	INDUCTOR-AXIAL;22UH,10%,4298	
....4	L607	2701-000177	INDUCTOR-AXIAL;33UH,10%,2534	
....4	L608	2701-000177	INDUCTOR-AXIAL;33UH,10%,2534	
....4	L705	2701-000177	INDUCTOR-AXIAL;33UH,10%,2534	
....4	L706	2701-000177	INDUCTOR-AXIAL;33UH,10%,2534	
....4	LV206	2701-000184	INDUCTOR-AXIAL;4.7UH,10%,2534	
....4	L303B	2701-001040	INDUCTOR-AXIAL;10UH,10%,4514	
....4	LV253	2702-001094	INDUCTOR-RADIAL;10uH,10%,4x6mm	
....4	F101	2901-000297	FILTER-EMI ON BOARD;-,3A,-,-,3.5x5,TP,-	
....4	F101	2901-000297	FILTER-EMI ON BOARD;-,3A,-,-,3.5x5,TP,-	
....4	L2514	3301-000287	BEAD-AXIAL;,3.5x1.0x6.0mm,3000mA,TP,,,50	
....4	L2514	3301-000287	BEAD-AXIAL;,3.5x1.0x6.0mm,3000mA,TP,,,50	
....4	L2514	3301-000287	BEAD-AXIAL;,3.5x1.0x6.0mm,3000mA,TP,,,50	
....4	L2514	3301-000287	BEAD-AXIAL;,3.5x1.0x6.0mm,3000mA,TP,,,50	
....4	L2514	3301-000287	BEAD-AXIAL;,3.5x1.0x6.0mm,3000mA,TP,,,50	
....4	L2514	3301-000287	BEAD-AXIAL;,3.5x1.0x6.0mm,3000mA,TP,,,50	
....4	L2514	3301-000287	BEAD-AXIAL;,3.5x1.0x6.0mm,3000mA,TP,,,50	
....4	L2514	3301-000287	BEAD-AXIAL;,3.5x1.0x6.0mm,3000mA,TP,,,50	
....4	L2514	3301-000287	BEAD-AXIAL;,3.5x1.0x6.0mm,3000mA,TP,,,50	
....4	L2514	3301-000287	BEAD-AXIAL;,3.5x1.0x6.0mm,3000mA,TP,,,50	
....4	L2514	3301-000287	BEAD-AXIAL;,3.5x1.0x6.0mm,3000mA,TP,,,50	
....4	L2514	3301-000287	BEAD-AXIAL;,3.5x1.0x6.0mm,3000mA,TP,,,50	
....4	L2514	3301-000287	BEAD-AXIAL;,3.5x1.0x6.0mm,3000mA,TP,,,50	
....4	SW901	3404-001252	SWITCH-TACT;12VDC,50MA,130GF,7.5X7.1,1	
....4	SW902	3404-001252	SWITCH-TACT;12VDC,50MA,130GF,7.5X7.1,1	
....4	SW903	3404-001252	SWITCH-TACT;12VDC,50MA,130GF,7.5X7.1,1	
....4	SW904	3404-001252	SWITCH-TACT;12VDC,50MA,130GF,7.5X7.1,1	
....4	SW905	3404-001252	SWITCH-TACT;12VDC,50MA,130GF,7.5X7.1,1	
....4	F801A	3602-000114	FUSE-HOLDER;-,-,30mohm	
....4	F801B	3602-000114	FUSE-HOLDER;-,-,30mohm	
....4	CN906	3711-002644	CONNECTOR-HEADER;BOX,5P,1R,2.5mm,STRAIGH	
....4	CN906	3711-002645	CONNECTOR-HEADER;BOX,6P,1R,2.5mm,STRAIGH	
....4	CN906	3711-002647	CONNECTOR-HEADER;BOX,8P,1R,2.5mm,STRAIGH	
....4	EL501	6042-000001	EYELET;ID2.2,OD2.7,L3.1,NI+SN,BSP3-1/2H	S.N.A
....4	EL502	6042-000001	EYELET;ID2.2,OD2.7,L3.1,NI+SN,BSP3-1/2H	S.N.A
....4	EL800	6042-000001	EYELET;ID2.2,OD2.7,L3.1,NI+SN,BSP3-1/2H	S.N.A
....4	EL801	6042-000001	EYELET;ID2.2,OD2.7,L3.1,NI+SN,BSP3-1/2H	S.N.A
....4	EL802	6042-000001	EYELET;ID2.2,OD2.7,L3.1,NI+SN,BSP3-1/2H	S.N.A
....4	EL803	6042-000001	EYELET;ID2.2,OD2.7,L3.1,NI+SN,BSP3-1/2H	S.N.A
....4	EL804	6042-000001	EYELET;ID2.2,OD2.7,L3.1,NI+SN,BSP3-1/2H	S.N.A
....4	EL805	6042-000001	EYELET;ID2.2,OD2.7,L3.1,NI+SN,BSP3-1/2H	S.N.A
....4	EL806	6042-000001	EYELET;ID2.2,OD2.7,L3.1,NI+SN,BSP3-1/2H	S.N.A
....4	EL807	6042-000001	EYELET;ID2.2,OD2.7,L3.1,NI+SN,BSP3-1/2H	S.N.A
....4	EL808	6042-000001	EYELET;ID2.2,OD2.7,L3.1,NI+SN,BSP3-1/2H	S.N.A
....4	EL809	6042-000001	EYELET;ID2.2,OD2.7,L3.1,NI+SN,BSP3-1/2H	S.N.A
....4	EL811	6042-000001	EYELET;ID2.2,OD2.7,L3.1,NI+SN,BSP3-1/2H	S.N.A
....4	EL812	6042-000001	EYELET;ID2.2,OD2.7,L3.1,NI+SN,BSP3-1/2H	S.N.A
....4	EL842	6042-000001	EYELET;ID2.2,OD2.7,L3.1,NI+SN,BSP3-1/2H	S.N.A
....4	EL857	6042-000001	EYELET;ID2.2,OD2.7,L3.1,NI+SN,BSP3-1/2H	S.N.A
....4	EL868	6042-000001	EYELET;ID2.2,OD2.7,L3.1,NI+SN,BSP3-1/2H	S.N.A
....4	EY600	6042-000002	EYELET;ID1.5,OD2,L2.8,NI+SN,BSP3-1/2H	S.N.A
....4	EY601	6042-000002	EYELET;ID1.5,OD2,L2.8,NI+SN,BSP3-1/2H	S.N.A
....4	EY602	6042-000002	EYELET;ID1.5,OD2,L2.8,NI+SN,BSP3-1/2H	S.N.A
....4	EY603	6042-000002	EYELET;ID1.5,OD2,L2.8,NI+SN,BSP3-1/2H	S.N.A
....4	EY800	6042-000002	EYELET;ID1.5,OD2,L2.8,NI+SN,BSP3-1/2H	S.N.A
....4	EY801	6042-000002	EYELET;ID1.5,OD2,L2.8,NI+SN,BSP3-1/2H	S.N.A
....4	EY802	6042-000002	EYELET;ID1.5,OD2,L2.8,NI+SN,BSP3-1/2H	S.N.A
....4	EY803	6042-000002	EYELET;ID1.5,OD2,L2.8,NI+SN,BSP3-1/2H	S.N.A
....4	EY804	6042-000002	EYELET;ID1.5,OD2,L2.8,NI+SN,BSP3-1/2H	S.N.A
....4	EY805	6042-000002	EYELET;ID1.5,OD2,L2.8,NI+SN,BSP3-1/2H	S.N.A
....4	EY806	6042-000002	EYELET;ID1.5,OD2,L2.8,NI+SN,BSP3-1/2H	S.N.A
....4	EY807	6042-000002	EYELET;ID1.5,OD2,L2.8,NI+SN,BSP3-1/2H	S.N.A
....4	EY808	6042-000002	EYELET;ID1.5,OD2,L2.8,NI+SN,BSP3-1/2H	S.N.A
....4	EY809	6042-000002	EYELET;ID1.5,OD2,L2.8,NI+SN,BSP3-1/2H	S.N.A
....4	EY810	6042-000002	EYELET;ID1.5,OD2,L2.8,NI+SN,BSP3-1/2H	S.N.A
....4	EY811	6042-000002	EYELET;ID1.5,OD2,L2.8,NI+SN,BSP3-1/2H	S.N.A
....4	EY812	6042-000002	EYELET;ID1.5,OD2,L2.8,NI+SN,BSP3-1/2H	S.N.A
....4	EY813	6042-000002	EYELET;ID1.5,OD2,L2.8,NI+SN,BSP3-1/2H	S.N.A
....4	EY814	6042-000002	EYELET;ID1.5,OD2,L2.8,NI+SN,BSP3-1/2H	S.N.A
....4	EY815	6042-000002	EYELET;ID1.5,OD2,L2.8,NI+SN,BSP3-1/2H	S.N.A
....4	EY816	6042-000002	EYELET;ID1.5,OD2,L2.8,NI+SN,BSP3-1/2H	S.N.A
....4	EY817	6042-000002	EYELET;ID1.5,OD2,L2.8,NI+SN,BSP3-1/2H	S.N.A
....4	EY818	6042-000002	EYELET;ID1.5,OD2,L2.8,NI+SN,BSP3-1/2H	S.N.A
....4	EY819	6042-000002	EYELET;ID1.5,OD2,L2.8,NI+SN,BSP3-1/2H	S.N.A
....4	EY821	6042-000002	EYELET;ID1.5,OD2,L2.8,NI+SN,BSP3-1/2H	S.N.A
....4	EY822	6042-000002	EYELET;ID1.5,OD2,L2.8,NI+SN,BSP3-1/2H	S.N.A
....4	EY823	6042-000002	EYELET;ID1.5,OD2,L2.8,NI+SN,BSP3-1/2H	S.N.A
....4	EY824	6042-000002	EYELET;ID1.5,OD2,L2.8,NI+SN,BSP3-1/2H	S.N.A

Level	Loc.No.	Code No.	Description;Specification	Remark
....4	EY826	6042-000002	EYELET;ID1.5,OD2,L2.8,NI+SN,BSP3-1/2H	S.N.A
....4	EY827	6042-000002	EYELET;ID1.5,OD2,L2.8,NI+SN,BSP3-1/2H	S.N.A
....4	EY828	6042-000002	EYELET;ID1.5,OD2,L2.8,NI+SN,BSP3-1/2H	S.N.A
....4	EY829	6042-000002	EYELET;ID1.5,OD2,L2.8,NI+SN,BSP3-1/2H	S.N.A
....4	EY830	6042-000002	EYELET;ID1.5,OD2,L2.8,NI+SN,BSP3-1/2H	S.N.A
....4	EY831	6042-000002	EYELET;ID1.5,OD2,L2.8,NI+SN,BSP3-1/2H	S.N.A
....4	EY832	6042-000002	EYELET;ID1.5,OD2,L2.8,NI+SN,BSP3-1/2H	S.N.A
....4	EY833	6042-000002	EYELET;ID1.5,OD2,L2.8,NI+SN,BSP3-1/2H	S.N.A
....4	EY834	6042-000002	EYELET;ID1.5,OD2,L2.8,NI+SN,BSP3-1/2H	S.N.A
....4	EY835	6042-000002	EYELET;ID1.5,OD2,L2.8,NI+SN,BSP3-1/2H	S.N.A
....4	EY836	6042-000002	EYELET;ID1.5,OD2,L2.8,NI+SN,BSP3-1/2H	S.N.A
....4	EY837	6042-000002	EYELET;ID1.5,OD2,L2.8,NI+SN,BSP3-1/2H	S.N.A
....4	EY838	6042-000002	EYELET;ID1.5,OD2,L2.8,NI+SN,BSP3-1/2H	S.N.A
....4	EY839	6042-000002	EYELET;ID1.5,OD2,L2.8,NI+SN,BSP3-1/2H	S.N.A
....4	EY840	6042-000002	EYELET;ID1.5,OD2,L2.8,NI+SN,BSP3-1/2H	S.N.A
....4	EY841	6042-000002	EYELET;ID1.5,OD2,L2.8,NI+SN,BSP3-1/2H	S.N.A
....4	EY842	6042-000002	EYELET;ID1.5,OD2,L2.8,NI+SN,BSP3-1/2H	S.N.A
....4	EY843	6042-000002	EYELET;ID1.5,OD2,L2.8,NI+SN,BSP3-1/2H	S.N.A
....4	EY844	6042-000002	EYELET;ID1.5,OD2,L2.8,NI+SN,BSP3-1/2H	S.N.A
....4	EY845	6042-000002	EYELET;ID1.5,OD2,L2.8,NI+SN,BSP3-1/2H	S.N.A
....4	EY846	6042-000002	EYELET;ID1.5,OD2,L2.8,NI+SN,BSP3-1/2H	S.N.A
....4	EY847	6042-000002	EYELET;ID1.5,OD2,L2.8,NI+SN,BSP3-1/2H	S.N.A
....4	EY848	6042-000002	EYELET;ID1.5,OD2,L2.8,NI+SN,BSP3-1/2H	S.N.A
....4	EY849	6042-000002	EYELET;ID1.5,OD2,L2.8,NI+SN,BSP3-1/2H	S.N.A
....4	EY850	6042-000002	EYELET;ID1.5,OD2,L2.8,NI+SN,BSP3-1/2H	S.N.A
....4	EY851	6042-000002	EYELET;ID1.5,OD2,L2.8,NI+SN,BSP3-1/2H	S.N.A
....4	EY852	6042-000002	EYELET;ID1.5,OD2,L2.8,NI+SN,BSP3-1/2H	S.N.A
....4	EY853	6042-000002	EYELET;ID1.5,OD2,L2.8,NI+SN,BSP3-1/2H	S.N.A
....4	EY854	6042-000002	EYELET;ID1.5,OD2,L2.8,NI+SN,BSP3-1/2H	S.N.A
....4	EY855	6042-000002	EYELET;ID1.5,OD2,L2.8,NI+SN,BSP3-1/2H	S.N.A
....4	EY856	6042-000002	EYELET;ID1.5,OD2,L2.8,NI+SN,BSP3-1/2H	S.N.A
....4	EY857	6042-000002	EYELET;ID1.5,OD2,L2.8,NI+SN,BSP3-1/2H	S.N.A
....4	EY858	6042-000002	EYELET;ID1.5,OD2,L2.8,NI+SN,BSP3-1/2H	S.N.A
....4	EY859	6042-000002	EYELET;ID1.5,OD2,L2.8,NI+SN,BSP3-1/2H	S.N.A
....4	EY862	6042-000002	EYELET;ID1.5,OD2,L2.8,NI+SN,BSP3-1/2H	S.N.A
....4	EY863	6042-000002	EYELET;ID1.5,OD2,L2.8,NI+SN,BSP3-1/2H	S.N.A
....4	EY864	6042-000002	EYELET;ID1.5,OD2,L2.8,NI+SN,BSP3-1/2H	S.N.A
....4	EY865	6042-000002	EYELET;ID1.5,OD2,L2.8,NI+SN,BSP3-1/2H	S.N.A
....4	EY866	6042-000002	EYELET;ID1.5,OD2,L2.8,NI+SN,BSP3-1/2H	S.N.A
....4	EY867	6042-000002	EYELET;ID1.5,OD2,L2.8,NI+SN,BSP3-1/2H	S.N.A
....4	EY869	6042-000002	EYELET;ID1.5,OD2,L2.8,NI+SN,BSP3-1/2H	S.N.A
....4	EY870	6042-000002	EYELET;ID1.5,OD2,L2.8,NI+SN,BSP3-1/2H	S.N.A
....4	EY871	6042-000002	EYELET;ID1.5,OD2,L2.8,NI+SN,BSP3-1/2H	S.N.A
....4	EY872	6042-000002	EYELET;ID1.5,OD2,L2.8,NI+SN,BSP3-1/2H	S.N.A
....4	EY873	6042-000002	EYELET;ID1.5,OD2,L2.8,NI+SN,BSP3-1/2H	S.N.A
....4	EY874	6042-000002	EYELET;ID1.5,OD2,L2.8,NI+SN,BSP3-1/2H	S.N.A
....4	EY875	6042-000002	EYELET;ID1.5,OD2,L2.8,NI+SN,BSP3-1/2H	S.N.A
....4	EY876	6042-000002	EYELET;ID1.5,OD2,L2.8,NI+SN,BSP3-1/2H	S.N.A
....4	EY877	6042-000002	EYELET;ID1.5,OD2,L2.8,NI+SN,BSP3-1/2H	S.N.A
....4	EY878	6042-000002	EYELET;ID1.5,OD2,L2.8,NI+SN,BSP3-1/2H	S.N.A
....4	EY879	6042-000002	EYELET;ID1.5,OD2,L2.8,NI+SN,BSP3-1/2H	S.N.A
....4	EY880	6042-000002	EYELET;ID1.5,OD2,L2.8,NI+SN,BSP3-1/2H	S.N.A
....4	EY881	6042-000002	EYELET;ID1.5,OD2,L2.8,NI+SN,BSP3-1/2H	S.N.A
....4	EY882	6042-000002	EYELET;ID1.5,OD2,L2.8,NI+SN,BSP3-1/2H	S.N.A
....4	EY883	6042-000002	EYELET;ID1.5,OD2,L2.8,NI+SN,BSP3-1/2H	S.N.A
....4	LX085	AA27-90001B	COIL-SPARK,GAP;S-23,1.5KV,-,-,-,-,-,-,-,	
....4	LX085	AA27-90001B	COIL-SPARK,GAP;S-23,1.5KV,-,-,-,-,-,-,-,	
....4	LX085	AA27-90001B	COIL-SPARK,GAP;S-23,1.5KV,-,-,-,-,-,-,-,	
....4	LX085	AA27-90001B	COIL-SPARK,GAP;S-23,1.5KV,-,-,-,-,-,-,-,	
....4	FT401	AA37-00001A	CONNECTOR-FBT FIX PIN;JM-3500,CPTTV,0.36	
....4	FT402	AA37-00001A	CONNECTOR-FBT FIX PIN;JM-3500,CPTTV,0.36	
....4	GT404	AA60-40014A	PIN-GT,ASSY;AUTO	S.N.A
....4	GT406	AA60-40014A	PIN-GT,ASSY;AUTO	S.N.A
....4	GT501	AA60-40014A	PIN-GT,ASSY;AUTO	S.N.A
....4	GT502	AA60-40014A	PIN-GT,ASSY;AUTO	S.N.A
....4	GT503	AA60-40014A	PIN-GT,ASSY;AUTO	S.N.A
....4	GT801	AA60-40014A	PIN-GT,ASSY;AUTO	S.N.A
....4	GT802	AA60-40014A	PIN-GT,ASSY;AUTO	S.N.A
....4	GT803	AA60-40014A	PIN-GT,ASSY;AUTO	S.N.A
....4	GT804	AA60-40014A	PIN-GT,ASSY;AUTO	S.N.A
....4	GT805	AA60-40014A	PIN-GT,ASSY;AUTO	S.N.A
....4	GT806	AA60-40014A	PIN-GT,ASSY;AUTO	S.N.A
....4	GTT01	AA60-40014A	PIN-GT,ASSY;AUTO	S.N.A
....4	GTT02	AA60-40014A	PIN-GT,ASSY;AUTO	S.N.A
....4	GTT04	AA60-40014A	PIN-GT,ASSY;AUTO	S.N.A
....4	GTT06	AA60-40014A	PIN-GT,ASSY;AUTO	S.N.A
....4	R024	2004-004089	R-METAL(S);123Kohm,1%,1/2W,AA,TP,2.5x6.5	

Level	Loc.No.	Code No.	Description;Specification	Remark
....4	0	AA41-01024D	PCB MAIN;CT-29K10G,1,D,FR-1,245*330*1.6,	S.N.A
....4	R125	2001-000313	R-CARBON;11KOHM,5%,1/8W,AA,TP,1.8X3.2MM	
....4	R125	2001-000429	R-CARBON;1KOHM,5%,1/8W,AA,TP,1.8X3.2MM	
....4	R125	2001-000429	R-CARBON;1KOHM,5%,1/8W,AA,TP,1.8X3.2MM	
....4	R075	2001-001165	R-CARBON(S);56OHM,5%,1/2W,AA,TP,2.4X6.4M	
....4	R075	2001-001165	R-CARBON(S);56OHM,5%,1/2W,AA,TP,2.4X6.4M	
....4	C598	2201-000467	C-CERAMIC,DISC;0.33NF,10%,2KV,Y5P,TP,6.3	
...3	T0616	AA26-00237A	TRANS FBT;FOK14B001,CPTTV,3.8mH,U 3277,F	S.N.A
...3	C2560	2301-001396	C-FILM,LEAD-PEF;100nF,10%,630V,TP,18x6.5	
⚠...3	CR406S	2306-000350	C-FILM,LEAD-PPF;270NF,5%,400V,BK,26X18.5	
...3	L409	AA27-00338A	COIL CHOKE;DR1220,CL21M21,320uH,10%,0.25	
...3	M0018	AA97-15547C	ASSY MICOM;,KS7A,GOLD RUSH,VCT49XX,T-GRN	
....4	T0119	AA09-00441A	IC MICOM;VCT4942,ONE CHIP,88P,1.8/3.3/5/	S.N.A
...3	DZ016	0403-000714	DIODE-ZENER;MTZJ3.3B,3.32-3.53V,500MW,DO	
⚠...3	CR402S	2301-001468	C-FILM,LEAD-PPF;3.3NF,3%,1.6KV,BK,29X13.	
⚠...3	CR403S	2306-000323	C-FILM,LEAD-PPF;2.2NF,5%,1.6KV,BK,23X9X1	
...3	T801S	AA26-00228B	TRANS SWITCHING;EER4245,CT-29K10G,PL5,PM	
...3	IC602	AA96-02124B	ASSY HEAT SINK P;AA62-30182G,SCREW,TDA72	S.N.A
....4	H/S	0205-001154	OIL-SILICON;G746,-,-	S.N.A
....4	T0085	1201-002121	IC-AUDIO AMP;TDA7266SA,CLIPWATT,15P,19.8	
....4	T0081	6003-000333	SCREW-TAPTITE;RH,+,2S,M3,L10,ZPC(YEL),SW	S.N.A
....4	H/S	AA61-01390A	BRACKET-IC;CT-29A20HR,SECC,T1.0	S.N.A
....4	H/S	AA62-30182G	HEAT SINK-ES;CT-29A20HR,A6063S,T2.0,26.2	S.N.A
..2	T0091	AA94-14789A	ASSY PCB MISC-A/V SIDE;CL21N11MQUXXAZ,KS	
...3		0202-001366	SOLDER-WIRE FLUX;-,RS60S,D1.2,63Sn/37Pb,	S.N.A
...3	T0245	AA39-20009D	LEAD CONNECTOR-ASSY;,1P,500,YFH800-01,16	
...3	T0245	AA39-20068E	LEAD CONNECTOR-ASSY;,8P,500,YBNH025-08,6	
...3	T0245	AA39-20069D	LEAD CONNECTOR-ASSY;,5P,300,YBNH025-05,6	
...3	BAND-W	AA63-10002A	BAND-TIE;NYLON66 V2,L100,NTR	S.N.A
...3		AA97-15542A	ASSY AUTO;CL21N11MQUXXAZ,KS7A,A/V SIDE	S.N.A
....4	R075	2001-000028	R-CARBON(S);100OHM,5%,1/2W,AA,TP,2.4X6.4	
....4	R075	2001-000028	R-CARBON(S);100OHM,5%,1/2W,AA,TP,2.4X6.4	
....4	0	AA41-01086A	PCB-A/V SIDE;21N11,FR-1,1,A,245*245*1.6T	S.N.A
....4	C701	2401-002009	C-AL;100uF,20%,16V,GP,TP,6.3x7,5	
....4	C701	2401-002009	C-AL;100uF,20%,16V,GP,TP,6.3x7,5	
...3	JE01	3722-001061	JACK-PHONE;1P,3.6PI,AG,BLK,N	
...3	JA01	3722-001164	JACK-PIN;3P,3.4mm,SN,WH:YE:RE,#16-22	
...3	T0081	6003-001023	SCREW-TAPTITE;PWH,+,B,M3,L10,ZPC(YEL),SW	S.N.A
...3	T0081	6003-001023	SCREW-TAPTITE;PWH,+,B,M3,L10,ZPC(YEL),SW	S.N.A
...3	T0010	AA61-01399A	HOLDER-AV;21N11(SEDA),HB,G4309,SV012P	S.N.A
...3		AA63-00935A	SHIELD-JACK;21N11,PC,T0.5,SHEET	S.N.A

ASSY FIXING

1		AA91-08458E	ASSY FIXING;CL21N11MQUXXAZ,KS7A	S.N.A
..2	T0245	AA39-20010B	LEAD CONNECTOR-ASSY;,1P,500,YFH800-01,S,	
..2	T0245	AA39-20010D	LEAD CONNECTOR-ASSY;,1P,400,YFH800-01,S,	
..2		AA65-30009A	CLAMPER CORE-FBT;-,ABS,V0,-,BLK,-	S.N.A
..2		AA65-30018A	CLAMPER CORE-WIRE;DONG-A,NYLON-66,-,-,-,	S.N.A
..2	CLAMP	AA65-30104C	CLAMPER CORE-WIRE;ALL MODEL,NYLON 66,V2,	S.N.A
⚠..2	T0066	AA96-20109C	ASSY POWER CORD;-,CP2/NO(4.0),H/C300,KKP	S.N.A
...3		3811-001609	WIRE-PVC CU;BCWA,300V,ROLL,-,#22,BLK	S.N.A
...3	T0268	AA39-10006X	CBF-POWER CORD;-,KKP419C,KLCE-2F,2.286MT	
...3	T0010	AA61-20284A	HOLDER;P-CORD,PP,-,-,-,BLK,VO,KE-002	S.N.A

ASSY P/MATERIAL

1		AA92-08953E	ASSY P/MATERIAL;21N11(SEDA)	S.N.A
..2		6902-000001	BAG AIR;LDPE,T0.2,L1800,W1000,TRP,,,LDPE	S.N.A
..2		6902-000005	BAG PE;HDPE/NITRON/HDPE,T0.015/T0.5/T0.0	S.N.A
..2		6902-000061	BAG AIR;LDPE,T0.2,L1000,W500,TRP,,,	S.N.A
..2	T0214	AA60-40006A	PIN-STAPLE;AUTO,33X17.8X2.4,H18,33X17.8X	S.N.A

ASSY ACCESSORY

1	M0045	AA92-10290A	ASSY ACCESSORY;CL21N11MQUXXAZ,KS7A	S.N.A
..2		6902-000009	BAG PE;HDPE,T0.03,L400,W240,TRP,8,2,PE M	S.N.A
..2	0	AA68-03242B	MANUAL-WARRANTY CARD;TH-ENG,SAFETY GUIDE	S.N.A
..2	T0074	AA59-00316F	REMOCON;GOLDRUSH,TM75,157*55*21,51860P0,	

Level	Loc.No.	Code No.	Description;Specification	Remark
...3	TM75	AA83-00099A	CKD-WINDOW-RMC;TM75,SEDA,AA59-00315B	S.N.A
...3	TM75	AA83-00100A	CKD-BATTERY-COVER;TM75,SEDA,AA59-00315B	S.N.A
...3	TM75	AA83-00101A	CKD-CASE-BOTTOM;TM75,SEDA,AA59-00315B	S.N.A
...3	TM75F	AA83-00105A	CKD-RUBBER-TOP,F;TM75,SEDA,AA59-00315F	S.N.A
...3	TM75F	AA83-00108A	CKD-INLAY-PC,F;TM75,SEDA,AA59-00315F	S.N.A
...3	TM75	AA83-00110A	CKD-SPRING-PLUS;TM75,SEDA,AA59-00315B	S.N.A
...3	TM75	AA83-00111A	CKD-SPRING-COMMON;TM75,SEDA,AA59-00315B	S.N.A
...3	TM75	AA83-00112A	CKD-SPRING-MINUS;TM75,SEDA,AA59-00316B	S.N.A
...3	TM75F	AA83-00113A	CKD-CASE-TOP,F;TM75,SEDA,AA59-00316G	S.N.A
...3	TM75	AA83-00130A	CKD-PCB;AA59-00316A,45*146.8*1.6t,XPC	S.N.A
...3	TM75	AA83-00131A	CKD-RESONATOR;AA59-00316A,3.64Mhz	S.N.A
...3	TM75	AA83-00132A	CKD-C-ELEC;AA59-00316A,50V 4.7uF 5*11	S.N.A
...3	TM75	AA83-00133A	CKD-IR-LED;CL2B,LTE-3371TL	S.N.A
...3	TM75	AA83-00134A	CKD-IC-CHIP;S3C1860XN9-SKB1	S.N.A
...3	TM75	AA83-00135A	CKD-R-CHIP;AA59-00316A,2012 1.0§Ù -J	S.N.A
...3	TM75	AA83-00138A	CKD-DIODE-CHIP;AA59-00316A,DAP202K	S.N.A
...3	PE-BAG	AA83-00155A	CKD-PE BAG;TM75,SEDA,AA59-00316B	S.N.A
...3	LABEL	AA83-00156A	CKD-LABEL QC;TM75,SEDA,AA59-00316B	S.N.A
..2	T0511	AA68-03503A	MANUAL USERS;CL34Z6,SAMSUNG,BP,BRAZIL,MO	S.N.A

Level	Loc.No.	Code No.	Description;Specification	Remark

Yon can search for the updated part code through ITSELF web site.
URL:http://itself.sec.samsung.co.kr

5-3 CL29M21MQUXXAZ

ASSY COVER FRONT

Level	Loc.No.	Code No.	Description;Specification	Remark
1	M0001	AA90-05222C	ASSY COVER FRONT;CL29M21MQUXXAZ	S.N.A
..2	T0081	6002-000522	SCREW-TAPPING;TH,+,2,M4,L15,ZPC(BLK),SWR	S.N.A
..2	T0081	6003-001026	SCREW-TAPTITE;RH,+,B,M4,L15,ZPC(BLK),SWR	S.N.A
..2	T0081	6003-001026	SCREW-TAPTITE;RH,+,B,M4,L15,ZPC(BLK),SWR	S.N.A
..2	T0081	6003-001268	SCREW-TAPTITE;TH,+,B,M4,L12,ZPC(YEL),SWR	S.N.A
..2	T0081	AA60-10050T	SCREW-TAPPING;-,SWRCH18A,M4,L20,RH,+,2S,	S.N.A
..2	CRT+CF	AA60-10050V	BOLT-HEX;-,SWRCH18A,M6,L30,HH,+,WC,-,Z	S.N.A
..2		AA61-01316A	BRACKET-CRATER;29 ALL,STS304,T0.5,,,,	S.N.A
..2	T0382	BP61-00495C	HOLDER-CARE;PJT,ACRYL-FOAM,T0.25,W30.0mm	S.N.A
..2	T0003	AA96-02423F	ASSY COVER P-FRONT;29M21,NEW,SEDA,HIPS,H	S.N.A
...3	T0082	3001-001005	SPEAKER;10W,8OHM,91DB,140HZ	
...3	T0081	6003-001019	SCREW-TAPTITE;RH,+,B,M4,L12,ZPC(BLK),SWR	S.N.A
...3	T0081	6003-001019	SCREW-TAPTITE;RH,+,B,M4,L12,ZPC(BLK),SWR	S.N.A
...3	T0081	6003-001019	SCREW-TAPTITE;RH,+,B,M4,L12,ZPC(BLK),SWR	S.N.A
...3	M2893	AA39-00369B	LEAD CONNECTOR;KS7A/CL29M21,UL1007#22,4P	S.N.A
...3	T0069	AA60-00091F	SPACER-FELT;-,FELT,150X10,-,-,BLK,T0.5,-	S.N.A
...3	T0069	AA60-00091J	SPACER-FELT;-,FELT,330X10,-,-,BLK,T0.5,-	S.N.A
...3	T0245	AA61-00711D	HOLDER-PCB;29U1,U2,HIPS VO,BK502(HB-PROP	S.N.A
...3	CIS7	AA61-60003J	SPRING ETC-CS;-,SUS304,-,-,OD6,N7,OD6,-,	S.N.A
...3	M0112	AA63-00860B	COVER-FRONT;29M21,NEW,HIPS,HB,G801P+S012	
...3		AA64-01506J	INLAY-AV;25M6,PS SHEET,T0.3,SILVER,P/GRA	S.N.A
...3	T0022	AA64-04050B	KNOB CONTROL;29M21,ABS,HB,G3676,GR801P	S.N.A
...3	T0592	AA64-04051A	WINDOW-CONTROL;29M21,PC,CLEAR	S.N.A
...3	T0023	AA64-04150A	KNOB-POWER;21,29M21(SEDA),ABS,HB,G3676,S	S.N.A
...3		AA64-04151A	KNOB-DECORATION;21,29M21(SEDA),ABS,HB,G3	S.N.A
...3	T0057	AA64-70117B	BADGE-BRAND;,AL,T1.5,10.6,L65,BLK,SILVER	S.N.A
...3		AA65-00011C	CLAMPER CORE-WIRE;ALL MODEL,NYLON 66,V2,	S.N.A
...3		AA65-30105A	CLAMPER CORE-WIRE;ALL MODEL,NYLON 66,V2,	S.N.A
...3	T0382	BP61-00509C	HOLDER-CARE;PJT,ACRYL-FOAM,T0.25,W20.0mm	S.N.A
..2	T0609	AA63-60004G	SPACER-GUM,CRT;-,NTR RUBBER,-,-,-,GRY,T3	S.N.A

ASSY COVER REAR

Level	Loc.No.	Code No.	Description;Specification	Remark
1	M0002	AA90-05223C	ASSY COVER REAR;29M21,SEDA,HIPS,HB,G4309	S.N.A
..2	T0069	AA60-00091P	SPACER-FELT;,FELT,500X10,BLK,T0.5	S.N.A
..2	M0006	AA63-00832A	COVER-REAR;29M21(SEDA),HIPS,HB,G4309	
..2		AA64-03974B	INLAY-BACK;KS7A,(ET),NT,PS,T0.3,SHEET,BL	S.N.A
..2	T0214	AA65-30008A	CLAMPER CORE-CORD;-,PE,HB,-,BLK,-	S.N.A

ASSY CPT

Level	Loc.No.	Code No.	Description;Specification	Remark
1	T0521	AA91-08189T	ASSY CPT;29,SDI MST CPT,0MG,A68QCP693X5	S.N.A
⚠..2	T0063	AA03-00400A	CRT COLOR;A68QCP693X500,0MG,1.1MH,14.9MH	
..2	T0090	AA27-00314A	COIL DEGAUSSING-TILT;TILT,CPTTV,33.5mH,1	
..2	T0089	AA27-00318A	COIL DEGAUSSING;29,TXN2798HFX,10%,50T,4	
..2	T0527	AA61-01373A	HOLDER-D COIL;29K5,NYLON 66	S.N.A
..2		AA98-70011A	ASSY TBC WIRE P;,29,NTSC,PAL,2P,UL1015#2	S.N.A
..2	T0064	AA65-00047A	CLAMPER CORE;D-Coil Clamp,NYLON 6/6,V0,	S.N.A

ASSY CHASSIS

Level	Loc.No.	Code No.	Description;Specification	Remark
1	M0017	AA91-08457C	ASSY CHASSIS;CL29M21MQUXXAZ	S.N.A
..2	T0091	AA94-13842A	ASSY PCB MISC-A/V SIDE;CT-29K10G,KS7A	
...3		0202-001366	SOLDER-WIRE FLUX;-,RS60S,D1.2,63Sn/37Pb,	S.N.A
...3	JA701	3722-001031	JACK-PIN;3P,3.6mm,#18,AU	
...3	T0245	AA39-20009D	LEAD CONNECTOR-ASSY;,1P,500,YFH800-01,16	
...3	T0245	AA39-20068E	LEAD CONNECTOR-ASSY;,8P,500,YBNH025-08,6	
...3		AA63-10002A	BAND-TIE;NYLON66 V2,L100,NTR	S.N.A
...3		AA97-14817A	ASSY AUTO;CT-29K10G,KS7A	S.N.A
....4	C689	2202-000121	C-CERAMIC,MLC-AXIAL;100pF,10%,50V,Y5P,TP	
....4	C689	2202-000121	C-CERAMIC,MLC-AXIAL;100pF,10%,50V,Y5P,TP	
....4	L701	2701-000114	INDUCTOR-AXIAL;10UH,10%,2534	
....4	L702	2701-000114	INDUCTOR-AXIAL;10UH,10%,2534	
....4	L2514	3301-000287	BEAD-AXIAL;,3.5x1.0x6.0mm,3000mA,TP,,,50	
....4	L2514	3301-000287	BEAD-AXIAL;,3.5x1.0x6.0mm,3000mA,TP,,,50	
....4	OO	AA41-00345A	PCB-SIDE A/V;CS29K1,FR-1,1L,A,1.6T,245x2	S.N.A
..2	M0014	AA94-14774C	ASSY PCB MAIN;CL29M21MQUXXAZ,KS7A	
...3		0202-001366	SOLDER-WIRE FLUX;-,RS60S,D1.2,63Sn/37Pb,	S.N.A
...3	T0083	0402-001295	DIODE-RECTIFIER;GUR460L-5700,600V,4A,DO-	
...3	T0083	0402-001599	DIODE-RECTIFIER;DGP30L,1500,3A,DO-201AD(	
⚠...3	PC801S	0604-001032	PHOTO-COUPLER;TR,170-260%,300mW,DIP-4,ST	
...3	IC112	1103-001171	IC-EEPROM;24C161,2Kx8,DIP,8P,9.2x6.4mm,2	
...3	T0087	1203-001006	IC-POSI.FIXED REG.;78R05,TO-220F,4P,-,PL	
...3	T0900	1404-001045	THERMISTOR-NTC;4.7ohm,15%,2900K,35.0mW,T	
...3	P803T	1404-001264	THERMISTOR-PTC;4.5OHM,+30/-20%,220V,290V	
...3	C598	2201-000963	C-CERAMIC,DISC;1NF,20%,400V,Y5U,TP,9.5X6	
...3	C598	2201-000987	C-CERAMIC,DISC;2.2NF,20%,400V,Y5U,BK,12.	
⚠...3	CR402S	2301-001041	C-FILM,LEAD-PPF;15nF,5%,1.6KV,TP,29x14x2	
⚠...3	C405S	2301-001338	C-FILM,LEAD-OTHER;0.68NF,5%,1.6KV,BK,28X	
⚠...3	CR406S	2306-000195	C-FILM,LEAD-PPF;360NF,5%,400V,BK,26X19X1	
⚠...3	CX801S	2306-000318	C-FILM,LEAD-PPF;220NF,20%,250V,BK,-,22.5	
...3	C701	2401-003025	C-AL;330uF,20%,400V,GP,BK,30x40,10	
...3	C701	2401-003633	C-AL;220uF,20%,160V,GP,BK,22x25mm,10	
...3	LV251	2701-000116	INDUCTOR-AXIAL;10UH,10%,4298	
...3	XV201	2801-004019	CRYSTAL-UNIT;20.25MHz,30ppm,28-AAM,13pF,	
...3	ICV101	2904-001196	FILTER-SAW AV;44MHZ,SIP5K,ST,16.2DB,-,42	
⚠...3	RL801S	3501-001053	RELAY-POWER;5VDC,530MW,10000MA,1FORMA,15	
⚠...3	FP801S	3601-000414	FUSE-CARTRIDGE;250V,5A,SLOW-BLOW,GLASS,5	
...3	CN906	3711-000024	CONNECTOR-HEADER;BOX,3P,1R,2.5mm,STRAIGH	
...3	CN906	3711-002641	CONNECTOR-HEADER;BOX,10P,1R,2.5MM,STRAIG	
...3	CN906	3711-003043	CONNECTOR-HEADER;BOX,4P,1R,2.5MM,STRAIGH	
...3	CN906	3711-003043	CONNECTOR-HEADER;BOX,4P,1R,2.5MM,STRAIGH	
...3	JAR701	3722-001333	JACK-PIN;9P,3.2mm,NI,BLK,-	
...3	DVD_SVHS	3722-001423	JACK-PIN;3P+S1P,3.4mm,NI,BLK,-	
...3	T0616	AA26-00205B	TRANS FBT;FFA61012K,CPTTV,3.4mH,FERRITE,	
⚠...3	T801S	AA26-00228C	TRANS SWITCHING;VD082-02,S60A,300V,90~26	
⚠...3	T401	AA26-50001R	TRANS-HORIZ.DRIVE;-,-,-,80MH,-,-,520UH,-	
...3	T0296	AA27-00035A	COIL LINEARITY;-,30UH,DR15X18,0.8MM,19X4	
...3	L405	AA27-00286A	COIL CHOKE;1MH,CPTTV,1MH,10%,0.5OHM,1A,D	
...3	L808	AA27-10002L	COIL CHOKE;-,24uH,K,-,2A,-,24UH-K,10x10m	
⚠...3	LX801S	AA29-00012A	FILTER LINE NOISE;CS29A6PF8X/HAC,-,0.1MA	
...3	CIS3	AA40-00016A	TUNER-F/S;TDQ-6F/13F2S,NTSC,181CH,45.75M	
...3	GT301	AA60-40012D	PIN-GT,ASSY;T1.6,6-12.5-,NYLON66	S.N.A
⚠...3	D801S	AA96-00276C	ASSY HEAT SINK P;-,BRIDGE ,AA62-00052A,G	S.N.A
....4		0205-001153	GREASE-SILICON;SC102,JAPAN,-	S.N.A
....4	T0083	0402-001399	DIODE-BRIDGE;GSIB660,600V,6A,SIP-4,BK	
....4	T0081	6003-000335	SCREW-TAPTITE;RH,+,2S,M3,L8,ZPC(YEL),SWR	S.N.A
....4		AA60-30003A	WASHER;T1.5,SBHG-1	S.N.A
....4		AA62-00052A	HEAT SINK-PS;-,-,-,SILVER,HOLE 18.5mm, 2	S.N.A
...3	HC801	AA96-00475J	ASSY HEAT SINK P;AA62-00066B,SCREW,FMG-G	S.N.A
....4	H/S	0205-001154	OIL-SILICON;G746,-,-	S.N.A
....4	T0083	0402-001230	DIODE-RECTIFIER;FMG-G2CS,1000V,3A,DO-41,	
....4	T0083	0402-001374	DIODE-RECTIFIER;FFPF06U20S,200V,6A,TO-22	
....4	T0087	1203-001006	IC-POSI.FIXED REG.;78R05,TO-220F,4P,-,PL	
....4	T0087	1203-001543	IC-POSI.FIXED REG.;78R33,TO-220,4P,400MI	
....4	T0081	6003-000334	SCREW-TAPTITE;RH,+,2S,M3,L6,ZPC(YEL),SWR	S.N.A
....4	H/S	AA62-00066B	HEAT SINK;D2,D3,AL ,T1.0,89,70,-,AA62-00	S.N.A
...3	IC301	AA96-00623F	ASSY HEAT SINK P;LA78045,SCREW,AA62-0005	S.N.A
....4	CIS	0205-001154	OIL-SILICON;G746,-,-	S.N.A
....4	T0088	1204-002183	IC-VERTICAL PROCESSO;LA78045,TO220,7P,15	
....4	T0081	6003-000334	SCREW-TAPTITE;RH,+,2S,M3,L6,ZPC(YEL),SWR	S.N.A
....4	CIS	AA62-00056A	HEAT SINK-PS;-,-,T1.0,-,41*35*70,D2,-,-,	S.N.A
...3	Q801	AA96-00624G	ASSY HEAT SINK P;SCREW,AA62-00057B,FQP63	S.N.A
....4	H/S	0205-001154	OIL-SILICON;G746,-,-	S.N.A
....4	Q409	0505-001723	FET-SILICON;FQP630TSTU,N,200V,9A,0.4OHM,	
....4	T0081	6003-000333	SCREW-TAPTITE;RH,+,2S,M3,L10,ZPC(YEL),SW	S.N.A
....4	H/S	AA60-30001A	WASHER-PLATE;M3,ID3.5,15X8.5,T1.0,SBHG	S.N.A
....4	H/S	AA62-00057B	HEAT SINK-PS;CT-29K12P,A1050S,1.0,41,60	S.N.A
...3	Q401	AA96-00624J	ASSY HEAT SINK P;SCREW,AA62-00057A,C5936	S.N.A
....4	H/S	0205-001154	OIL-SILICON;G746,-,-	S.N.A

Level	Loc.No.	Code No.	Description;Specification	Remark
....4	T0090	0502-001264	TR-POWER;2SC5936,NPN,40000mW,TOP-3E,ST,5	
....4	T0081	6003-000333	SCREW-TAPTITE;RH,+,2S,M3,L10,ZPC(YEL),SW	S.N.A
....4	H/S	AA60-30001A	WASHER-PLATE;M3,ID3.5,15X8.5,T1.0,SBHG	S.N.A
....4	H/S	AA62-00057A	HEAT SINK-PS;-,-,T1.0,-,41*20*60,D2,-,-,	S.N.A
⚠...3	IC801S	AA96-50371K	ASSY HEAT SINK P;AA62-30181H,SCREW,STR-X	S.N.A
....4	CIS	0205-001154	OIL-SILICON;G746,-,-	S.N.A
....4	T0081	6003-000333	SCREW-TAPTITE;RH,+,2S,M3,L10,ZPC(YEL),SW	S.N.A
....4	CIS	AA62-30181H	HEAT SINK-ES;-,AL6063 EXTR.,2,WHT,50MM,-	S.N.A
....4	IC063	AA13-00112A	IC HYBRID;STR-X6750B,CS29M6PF,7,-20 to +	
...3		AA97-15539A	ASSY AUTO;CL29M21MQUXXAZ,KS7A	S.N.A
⚠....4	CISS	0401-000005	DIODE-SWITCHING;1N4148,75V,150MA,DO-35,T	
⚠....4	CISS	0401-000005	DIODE-SWITCHING;1N4148,75V,150MA,DO-35,T	
⚠....4	CISS	0401-000005	DIODE-SWITCHING;1N4148,75V,150MA,DO-35,T	
⚠....4	CISS	0401-000005	DIODE-SWITCHING;1N4148,75V,150MA,DO-35,T	
⚠....4	CISS	0401-000005	DIODE-SWITCHING;1N4148,75V,150MA,DO-35,T	
⚠....4	CISS	0401-000005	DIODE-SWITCHING;1N4148,75V,150MA,DO-35,T	
⚠....4	CISS	0401-000005	DIODE-SWITCHING;1N4148,75V,150MA,DO-35,T	
⚠....4	CISS	0401-000005	DIODE-SWITCHING;1N4148,75V,150MA,DO-35,T	
⚠....4	CISS	0401-000006	DIODE-SWITCHING;BAV21,250V,200MA,DO-35,T	
⚠....4	CISS	0401-000006	DIODE-SWITCHING;BAV21,250V,200MA,DO-35,T	
....4	T0083	0402-000132	DIODE-RECTIFIER;1N4004,400V,1A,DO-41,TP	
....4	T0083	0402-000132	DIODE-RECTIFIER;1N4004,400V,1A,DO-41,TP	
....4	T0083	0402-000132	DIODE-RECTIFIER;1N4004,400V,1A,DO-41,TP	
....4	T0083	0402-000132	DIODE-RECTIFIER;1N4004,400V,1A,DO-41,TP	
....4	T0083	0402-000493	DIODE-RECTIFIER;1R5GU41,400V,1.5A,DO-15L	
....4	T0083	0402-000534	DIODE-RECTIFIER;RG10V,400V,1.2A,DO-201,T	
....4	T0083	0402-000537	DIODE-RECTIFIER;RH1A,600V,0.6A,DO-204AC	
....4	T0083	0402-000540	DIODE-RECTIFIER;RU20A,600V,1.5A,-,TP	
....4	T0083	0402-000546	DIODE-RECTIFIER;TVR10G,400V,1.0A,DO-41,T	
....4	T0083	0402-000546	DIODE-RECTIFIER;TVR10G,400V,1.0A,DO-41,T	
....4	T0083	0402-000546	DIODE-RECTIFIER;TVR10G,400V,1.0A,DO-41,T	
....4	T0083	0402-000546	DIODE-RECTIFIER;TVR10G,400V,1.0A,DO-41,T	
....4	DZ016	0403-000508	DIODE-ZENER;MTZJ5.6B,5.45-5.73V,500MW,DO	
....4	DZ016	0403-000508	DIODE-ZENER;MTZJ5.6B,5.45-5.73V,500MW,DO	
....4	DZ016	0403-000508	DIODE-ZENER;MTZJ5.6B,5.45-5.73V,500MW,DO	
....4	DZ016	0403-000700	DIODE-ZENER;TZP33A,5%,1000MW,DO-41,TP	
....4	DZ016	0403-000700	DIODE-ZENER;TZP33A,5%,1000MW,DO-41,TP	
....4	DZ016	0403-000700	DIODE-ZENER;TZP33A,5%,1000MW,DO-41,TP	
....4	DZ016	0403-000714	DIODE-ZENER;MTZJ3.3B,3.32-3.53V,500MW,DO	
....4	DZ016	0403-000720	DIODE-ZENER;MTZJ9.1B,8.57-9.01V,500MW,DO	
....4	DZ016	0403-000720	DIODE-ZENER;MTZJ9.1B,8.57-9.01V,500MW,DO	
....4	DZ016	0403-000720	DIODE-ZENER;MTZJ9.1B,8.57-9.01V,500MW,DO	
....4	DZ016	0403-000720	DIODE-ZENER;MTZJ9.1B,8.57-9.01V,500MW,DO	
....4	DZ016	0403-000720	DIODE-ZENER;MTZJ9.1B,8.57-9.01V,500MW,DO	
....4	DZ016	0403-000720	DIODE-ZENER;MTZJ9.1B,8.57-9.01V,500MW,DO	
....4	DZ016	0403-000720	DIODE-ZENER;MTZJ9.1B,8.57-9.01V,500MW,DO	
....4	DZ016	0403-000734	DIODE-ZENER;TZP15B,14.7-16.5V,1000MW,DO-	
....4	DZ016	0403-001221	DIODE-ZENER;UZ39BSB,35.36-37.19V,500MW,D	
....4	DZ016	0403-001320	DIODE-ZENER;MTZJ6.2C,6.16-6.4V,500MW,DO-	
....4	DZ016	0403-001321	DIODE-ZENER;MTZJ6.8C,6.7-6.97V,500MW,DO-	
....4	DZ016	0403-001329	DIODE-ZENER;MTZJ24B,22.75-23.73V,500MW,D	
....4	DZ016	0403-001329	DIODE-ZENER;MTZJ24B,22.75-23.73V,500MW,D	
....4	DZ016	0403-001329	DIODE-ZENER;MTZJ24B,22.75-23.73V,500MW,D	
....4	T0156	0501-000010	TR-SMALL SIGNAL;KSC1008,NPN,800mW,TO-92,	
....4	T0156	0501-000010	TR-SMALL SIGNAL;KSC1008,NPN,800mW,TO-92,	
....4	T0156	0501-000283	TR-SMALL SIGNAL;KSA539,PNP,400mW,TO-92,T	
....4	T0156	0501-000283	TR-SMALL SIGNAL;KSA539,PNP,400mW,TO-92,T	
....4	T0156	0501-000283	TR-SMALL SIGNAL;KSA539,PNP,400mW,TO-92,T	
....4	T0156	0501-000283	TR-SMALL SIGNAL;KSA539,PNP,400mW,TO-92,T	
....4	T0156	0501-000369	TR-SMALL SIGNAL;KSC2331-Y,NPN,1000mW,TO-	
....4	T0156	0501-000389	TR-SMALL SIGNAL;KSC815,NPN,400mW,TO-92,T	
....4	T0156	0501-000389	TR-SMALL SIGNAL;KSC815,NPN,400mW,TO-92,T	
....4	T0156	0501-000389	TR-SMALL SIGNAL;KSC815,NPN,400mW,TO-92,T	
....4	T0156	0501-000389	TR-SMALL SIGNAL;KSC815,NPN,400mW,TO-92,T	
....4	T0156	0501-000389	TR-SMALL SIGNAL;KSC815,NPN,400mW,TO-92,T	
....4	T0156	0501-000389	TR-SMALL SIGNAL;KSC815,NPN,400mW,TO-92,T	
....4	T0156	0501-000389	TR-SMALL SIGNAL;KSC815,NPN,400mW,TO-92,T	
....4	T0156	0501-000389	TR-SMALL SIGNAL;KSC815,NPN,400mW,TO-92,T	
....4	T0156	0501-000389	TR-SMALL SIGNAL;KSC815,NPN,400mW,TO-92,T	
....4	T0090	0502-001007	TR-POWER;KSC2073-H2,NPN,25W,TO-220,ST,6	
....4	Q409	0505-000109	FET-SILICON;2N7000,N,60V,200mA,5ohm,400m	
....4	Q409	0505-000109	FET-SILICON;2N7000,N,60V,200mA,5ohm,400m	
....4	Q409	0505-000109	FET-SILICON;2N7000,N,60V,200mA,5ohm,400m	
....4	T0087	1203-000293	IC-POSI.FIXED REG.;7808,TO-220,3P,-,PLAS	
....4	IC012	1203-001217	IC-POSI.ADJUST REG.;431,TO-92,3P,4.58MIL	
....4	IC202	1203-001943	IC-VOL. DETECTOR;7025,TO-92,3P,-,PLASTIC	
....4	T0087	1203-001944	IC-POSI.FIXED REG.;78RM33,TO-220,3P,-,PL	

Level	Loc.No.	Code No.	Description;Specification	Remark
⚠....4	VP801S	1405-000152	VARISTOR;560V,2500A,14x8.5mm,TP	
⚠....4	VX801S	1405-000152	VARISTOR;560V,2500A,14x8.5mm,TP	
....4	R125	2001-000003	R-CARBON;330ohm,5%,1/8W,AA,TP,1.8x3.2mm	
....4	R125	2001-000003	R-CARBON;330ohm,5%,1/8W,AA,TP,1.8x3.2mm	
....4	R125	2001-000005	R-CARBON;390ohm,5%,1/8W,AA,TP,1.8x3.2mm	
....4	R125	2001-000005	R-CARBON;390ohm,5%,1/8W,AA,TP,1.8x3.2mm	
....4	R125	2001-000006	R-CARBON;2.4KOHM,5%,1/8W,AA,TP,1.8X3.2MM	
....4	R075	2001-000016	R-CARBON(S);1OHM,5%,1/2W,AA,TP,2.4X6.4MM	
....4	R075	2001-000020	R-CARBON(S);22OHM,5%,1/2W,AA,TP,2.4X6.4M	
....4	R075	2001-000037	R-CARBON(S);330OHM,5%,1/2W,AA,TP,2.4X6.4	
....4	R075	2001-000052	R-CARBON(S);3.3KOHM,5%,1/2W,AA,TP,2.4X6.	
....4	R075	2001-000052	R-CARBON(S);3.3KOHM,5%,1/2W,AA,TP,2.4X6.	
....4	R125	2001-000221	R-CARBON;1.2KOHM,5%,1/8W,AA,TP,1.8X3.2MM	
....4	R125	2001-000221	R-CARBON;1.2KOHM,5%,1/8W,AA,TP,1.8X3.2MM	
....4	R125	2001-000252	R-CARBON;1.6KOHM,5%,1/8W,AA,TP,1.8X3.2MM	
....4	R125	2001-000273	R-CARBON;100KOHM,5%,1/8W,AA,TP,1.8X3.2MM	
....4	R125	2001-000273	R-CARBON;100KOHM,5%,1/8W,AA,TP,1.8X3.2MM	
....4	R125	2001-000273	R-CARBON;100KOHM,5%,1/8W,AA,TP,1.8X3.2MM	
....4	R125	2001-000273	R-CARBON;100KOHM,5%,1/8W,AA,TP,1.8X3.2MM	
....4	R125	2001-000273	R-CARBON;100KOHM,5%,1/8W,AA,TP,1.8X3.2MM	
....4	R125	2001-000281	R-CARBON;100OHM,5%,1/8W,AA,TP,1.8X3.2MM	
....4	R125	2001-000281	R-CARBON;100OHM,5%,1/8W,AA,TP,1.8X3.2MM	
....4	R125	2001-000281	R-CARBON;100OHM,5%,1/8W,AA,TP,1.8X3.2MM	
....4	R125	2001-000281	R-CARBON;100OHM,5%,1/8W,AA,TP,1.8X3.2MM	
....4	R125	2001-000281	R-CARBON;100OHM,5%,1/8W,AA,TP,1.8X3.2MM	
....4	R125	2001-000281	R-CARBON;100OHM,5%,1/8W,AA,TP,1.8X3.2MM	
....4	R125	2001-000281	R-CARBON;100OHM,5%,1/8W,AA,TP,1.8X3.2MM	
....4	R125	2001-000281	R-CARBON;100OHM,5%,1/8W,AA,TP,1.8X3.2MM	
....4	R125	2001-000281	R-CARBON;100OHM,5%,1/8W,AA,TP,1.8X3.2MM	
....4	R125	2001-000281	R-CARBON;100OHM,5%,1/8W,AA,TP,1.8X3.2MM	
....4	R125	2001-000281	R-CARBON;100OHM,5%,1/8W,AA,TP,1.8X3.2MM	
....4	R125	2001-000281	R-CARBON;100OHM,5%,1/8W,AA,TP,1.8X3.2MM	
....4	R125	2001-000281	R-CARBON;100OHM,5%,1/8W,AA,TP,1.8X3.2MM	
....4	R125	2001-000290	R-CARBON;10KOHM,5%,1/8W,AA,TP,1.8X3.2MM	
....4	R125	2001-000290	R-CARBON;10KOHM,5%,1/8W,AA,TP,1.8X3.2MM	
....4	R125	2001-000290	R-CARBON;10KOHM,5%,1/8W,AA,TP,1.8X3.2MM	
....4	R125	2001-000290	R-CARBON;10KOHM,5%,1/8W,AA,TP,1.8X3.2MM	
....4	R125	2001-000290	R-CARBON;10KOHM,5%,1/8W,AA,TP,1.8X3.2MM	
....4	R125	2001-000290	R-CARBON;10KOHM,5%,1/8W,AA,TP,1.8X3.2MM	
....4	R125	2001-000290	R-CARBON;10KOHM,5%,1/8W,AA,TP,1.8X3.2MM	
....4	R125	2001-000290	R-CARBON;10KOHM,5%,1/8W,AA,TP,1.8X3.2MM	
....4	R125	2001-000290	R-CARBON;10KOHM,5%,1/8W,AA,TP,1.8X3.2MM	
....4	R125	2001-000331	R-CARBON;12KOHM,5%,1/8W,AA,TP,1.8X3.2MM	
....4	R125	2001-000362	R-CARBON;150OHM,5%,1/8W,AA,TP,1.8X3.2MM	
....4	R125	2001-000362	R-CARBON;150OHM,5%,1/8W,AA,TP,1.8X3.2MM	
....4	R125	2001-000362	R-CARBON;150OHM,5%,1/8W,AA,TP,1.8X3.2MM	
....4	R125	2001-000376	R-CARBON;15OHM,5%,1/8W,AA,TP,1.8X3.2MM	
....4	R125	2001-000429	R-CARBON;1KOHM,5%,1/8W,AA,TP,1.8X3.2MM	
....4	R125	2001-000429	R-CARBON;1KOHM,5%,1/8W,AA,TP,1.8X3.2MM	
....4	R125	2001-000429	R-CARBON;1KOHM,5%,1/8W,AA,TP,1.8X3.2MM	
....4	R125	2001-000429	R-CARBON;1KOHM,5%,1/8W,AA,TP,1.8X3.2MM	
....4	R125	2001-000429	R-CARBON;1KOHM,5%,1/8W,AA,TP,1.8X3.2MM	
....4	R125	2001-000429	R-CARBON;1KOHM,5%,1/8W,AA,TP,1.8X3.2MM	
....4	R125	2001-000429	R-CARBON;1KOHM,5%,1/8W,AA,TP,1.8X3.2MM	
....4	R125	2001-000429	R-CARBON;1KOHM,5%,1/8W,AA,TP,1.8X3.2MM	
....4	R125	2001-000429	R-CARBON;1KOHM,5%,1/8W,AA,TP,1.8X3.2MM	
....4	R125	2001-000449	R-CARBON;2.2KOHM,5%,1/8W,AA,TP,1.8X3.2MM	
....4	R125	2001-000449	R-CARBON;2.2KOHM,5%,1/8W,AA,TP,1.8X3.2MM	
....4	R125	2001-000449	R-CARBON;2.2KOHM,5%,1/8W,AA,TP,1.8X3.2MM	
....4	R125	2001-000522	R-CARBON;22KOHM,5%,1/8W,AA,TP,1.8X3.2MM	
....4	R125	2001-000522	R-CARBON;22KOHM,5%,1/8W,AA,TP,1.8X3.2MM	
....4	R125	2001-000527	R-CARBON;22OHM,5%,1/8W,AA,TP,1.8X3.2MM	
....4	R125	2001-000554	R-CARBON;270OHM,5%,1/8W,AA,TP,1.8X3.2MM	
....4	R125	2001-000554	R-CARBON;270OHM,5%,1/8W,AA,TP,1.8X3.2MM	
....4	R125	2001-000554	R-CARBON;270OHM,5%,1/8W,AA,TP,1.8X3.2MM	
....4	R125	2001-000591	R-CARBON;3.3KOHM,5%,1/8W,AA,TP,1.8X3.2MM	
....4	R125	2001-000613	R-CARBON;3.9KOHM,5%,1/8W,AA,TP,1.8X3.2MM	
....4	R125	2001-000660	R-CARBON;33KOHM,5%,1/8W,AA,TP,1.8X3.2MM	
....4	R125	2001-000666	R-CARBON;33OHM,5%,1/8W,AA,TP,1.8X3.2MM	
....4	R125	2001-000666	R-CARBON;33OHM,5%,1/8W,AA,TP,1.8X3.2MM	
....4	R125	2001-000666	R-CARBON;33OHM,5%,1/8W,AA,TP,1.8X3.2MM	
....4	R125	2001-000734	R-CARBON;4.7KOHM,5%,1/8W,AA,TP,1.8X3.2MM	
....4	R125	2001-000734	R-CARBON;4.7KOHM,5%,1/8W,AA,TP,1.8X3.2MM	

Level	Loc.No.	Code No.	Description;Specification	Remark
....4	R125	2001-000734	R-CARBON;4.7KOHM,5%,1/8W,AA,TP,1.8X3.2MM	
....4	R125	2001-000734	R-CARBON;4.7KOHM,5%,1/8W,AA,TP,1.8X3.2MM	
....4	R125	2001-000734	R-CARBON;4.7KOHM,5%,1/8W,AA,TP,1.8X3.2MM	
....4	R125	2001-000734	R-CARBON;4.7KOHM,5%,1/8W,AA,TP,1.8X3.2MM	
....4	R125	2001-000734	R-CARBON;4.7KOHM,5%,1/8W,AA,TP,1.8X3.2MM	
....4	R125	2001-000734	R-CARBON;4.7KOHM,5%,1/8W,AA,TP,1.8X3.2MM	
....4	R125	2001-000734	R-CARBON;4.7KOHM,5%,1/8W,AA,TP,1.8X3.2MM	
....4	R125	2001-000734	R-CARBON;4.7KOHM,5%,1/8W,AA,TP,1.8X3.2MM	
....4	R125	2001-000780	R-CARBON;470OHM,5%,1/8W,AA,TP,1.8X3.2MM	
....4	R125	2001-000832	R-CARBON;510OHM,5%,1/8W,AA,TP,1.8X3.2MM	
....4	R125	2001-000832	R-CARBON;510OHM,5%,1/8W,AA,TP,1.8X3.2MM	
....4	R125	2001-000832	R-CARBON;510OHM,5%,1/8W,AA,TP,1.8X3.2MM	
....4	R125	2001-000832	R-CARBON;510OHM,5%,1/8W,AA,TP,1.8X3.2MM	
....4	R125	2001-000832	R-CARBON;510OHM,5%,1/8W,AA,TP,1.8X3.2MM	
....4	R125	2001-000832	R-CARBON;510OHM,5%,1/8W,AA,TP,1.8X3.2MM	
....4	R125	2001-000869	R-CARBON;56OHM,5%,1/8W,AA,TP,1.8X3.2MM	
....4	R125	2001-000924	R-CARBON;680OHM,5%,1/8W,AA,TP,1.8X3.2MM	
....4	R125	2001-000969	R-CARBON;75OHM,5%,1/8W,AA,TP,1.8X3.2MM	
....4	R125	2001-000969	R-CARBON;75OHM,5%,1/8W,AA,TP,1.8X3.2MM	
....4	R125	2001-000969	R-CARBON;75OHM,5%,1/8W,AA,TP,1.8X3.2MM	
....4	R125	2001-000969	R-CARBON;75OHM,5%,1/8W,AA,TP,1.8X3.2MM	
....4	R125	2001-000969	R-CARBON;75OHM,5%,1/8W,AA,TP,1.8X3.2MM	
....4	R125	2001-000969	R-CARBON;75OHM,5%,1/8W,AA,TP,1.8X3.2MM	
....4	R125	2001-000969	R-CARBON;75OHM,5%,1/8W,AA,TP,1.8X3.2MM	
....4	R125	2001-000977	R-CARBON;8.2KOHM,5%,1/8W,AA,TP,1.8X3.2MM	
....4	R125	2001-000977	R-CARBON;8.2KOHM,5%,1/8W,AA,TP,1.8X3.2MM	
....4	R125	2001-000995	R-CARBON;820OHM,5%,1/8W,AA,TP,1.8X3.2MM	
....4	R075	2001-001040	R-CARBON(S);0.68OHM,5%,1/2W,AA,TP,2.4X6.	
....4	R075	2001-001070	R-CARBON(S);120OHM,5%,1/2W,AA,TP,2.4X6.4	
....4	R075	2001-001071	R-CARBON(S);12KOHM,5%,1/2W,AA,TP,2.4X6.4	
....4	R075	2001-001079	R-CARBON(S);15OHM,5%,1/2W,AA,TP,2.4X6.4M	
....4	R075	2001-001088	R-CARBON(S);1KOHM,5%,1/2W,AA,TP,2.4X6.4M	
....4	R075	2001-001088	R-CARBON(S);1KOHM,5%,1/2W,AA,TP,2.4X6.4M	
....4	R075	2001-001099	R-CARBON(S);2.7KOHM,5%,1/2W,AA,TP,2.4X6.	
....4	R075	2001-001107	R-CARBON(S);220ohm,5%,1/2W,AA,TP,2.4x6.4	
....4	R075	2001-001114	R-CARBON(S);270OHM,5%,1/2W,AA,TP,2.4X6.4	
....4	R075	2001-001115	R-CARBON(S);27KOHM,5%,1/2W,AA,TP,2.4X6.4	S.N.A
....4	R075	2001-001115	R-CARBON(S);27KOHM,5%,1/2W,AA,TP,2.4X6.4	S.N.A
....4	R075	2001-001126	R-CARBON(S);300OHM,5%,1/2W,AA,TP,2.4X6.4	
....4	R075	2001-001131	R-CARBON(S);33KOHM,5%,1/2W,AA,TP,2.4X6.4	
....4	R075	2001-001139	R-CARBON(S);39KOHM,5%,1/2W,AA,TP,2.4X6.4	
....4	R075	2001-001150	R-CARBON(S);470KOHM,5%,1/2W,AA,TP,2.4X6.	
....4	R075	2001-001150	R-CARBON(S);470KOHM,5%,1/2W,AA,TP,2.4X6.	
....4	R075	2001-001152	R-CARBON(S);47KOHM,5%,1/2W,AA,TP,2.4X6.4	
....4	R075	2001-001168	R-CARBON(S);6.8KOHM,5%,1/2W,AA,TP,2.4X6.	
....4	R075	2001-001187	R-CARBON(S);75OHM,5%,1/2W,AA,TP,2.4X6.4M	
....4	R0521	2002-001010	R-COMPOSITION;1.8Mohm,5%,1/2W,AA,TP,3.7x	
....4	R0521	2002-001012	R-COMPOSITION;8.2Mohm,5%,1/2W,AA,TP,3.7x	
....4	R426	2003-000540	R-METAL OXIDE(S);1Kohm,5%,2W,AF,TP,4x12m	
....4	R802	2003-000586	R-METAL OXIDE(S);22Kohm,5%,2W,AF,TP,4x12	
....4	R803	2003-000586	R-METAL OXIDE(S);22Kohm,5%,2W,AF,TP,4x12	
....4	R804	2003-000586	R-METAL OXIDE(S);22Kohm,5%,2W,AF,TP,4x12	
....4	R830	2003-000586	R-METAL OXIDE(S);22Kohm,5%,2W,AF,TP,4x12	
....4	R831	2003-000586	R-METAL OXIDE(S);22Kohm,5%,2W,AF,TP,4x12	
....4	R309	2003-001018	R-METAL OXIDE(S);220ohm,5%,2W,AF,TP,3.9x	
....4	R423	2003-001042	R-METAL OXIDE(S);5.6Kohm,5%,2W,AF,TP,3.9	
....4	R835	2003-002020	R-METAL OXIDE(S);56Kohm,5%,2W,AF,TP,3.9x	
....4	R836	2003-002020	R-METAL OXIDE(S);56Kohm,5%,2W,AF,TP,3.9x	
....4	R310	2003-002037	R-METAL OXIDE(S);270ohm,5%,2W,AF,TP,3.9x	
....4	R407	2003-002151	R-METAL OXIDE;18KOHM,5%,2W,AG,TP,6X16MM	
....4	R420	2004-000412	R-METAL;18Kohm,1%,1/4W,AA,TP,2.4x6.4mm	
....4	RV909	2004-000869	R-METAL;3Kohm,1%,1/8W,AA,TP,1.8x3.2mm	
....4	R411	2004-000947	R-METAL;43Kohm,1%,1/4W,AA,TP,2.4x6.4mm	
....4	R024	2004-001382	R-METAL(S);13Kohm,1%,1/2W,AA,TP,2.4x6.4m	
....4	R024	2004-001382	R-METAL(S);13Kohm,1%,1/2W,AA,TP,2.4x6.4m	
....4	R024	2004-001390	R-METAL(S);1Kohm,2%,1/2W,AA,TP,2.4x6.4mm	
....4	R024	2004-001397	R-METAL(S);4.7Kohm,1%,1/2W,AA,TP,2.4x6.4	
....4	R024	2004-001402	R-METAL(S);6.8Kohm,1%,1/2W,AA,TP,2.4x6.4	
....4	R024	2004-001891	R-METAL(S);133Kohm,1%,1/2W,AA,TP,2.5x6.5	
....4	R024	2004-001891	R-METAL(S);133Kohm,1%,1/2W,AA,TP,2.5x6.5	
....4	RV206	2004-001912	R-METAL;15Kohm,2%,1/8W,AA,TP,1.8x3.5mm	
....4	R024	2004-001983	R-METAL(S);2.49Kohm,1%,1/2W,AA,TP,2.4x6.	
....4	RV212	2004-002187	R-METAL;619ohm,1%,1/8W,AA,TP,1.8x3.2mm	
....4	RV214	2004-002187	R-METAL;619ohm,1%,1/8W,AA,TP,1.8x3.2mm	
....4	RV216	2004-002187	R-METAL;619ohm,1%,1/8W,AA,TP,1.8x3.2mm	
....4	R024	2004-004045	R-METAL(S);390ohm,1%,1/2W,AA,TP,2.5x6.5m	
....4	R024	2004-005054	R-METAL(S);39KOHM,1%,1/2W,AA,TP,2.4X6.4M	

Level	Loc.No.	Code No.	Description;Specification	Remark
....4	R560	2008-000205	R-FUSIBLE(S);10ohm,5%,1/2W,AF,TP,2.5x6.5	
....4	R834	2008-000205	R-FUSIBLE(S);10ohm,5%,1/2W,AF,TP,2.5x6.5	
....4	R809B	2008-000206	R-FUSIBLE(S);1ohm,5%,1/2W,AF,TP,2.5x6.5m	
....4	R829	2008-000252	R-FUSIBLE(S);0.47ohm,10%,1/2W,AF,TP,2.5x	
....4	R413	2008-000253	R-FUSIBLE(S);0.47ohm,5%,1W,AF,TP,3.9x10m	
....4	R414	2008-000264	R-FUSIBLE(S);1ohm,5%,1W,AF,TP,3.9x10mm	
....4	R825	2008-000284	R-FUSIBLE(S);0.1OHM,10%,2W,AF,TP,3.9X10M	
....4	R827	2008-000284	R-FUSIBLE(S);0.1OHM,10%,2W,AF,TP,3.9X10M	
....4	R837	2008-000290	R-FUSIBLE(S);2.4ohm,5%,2W,AF,TP,3.9x10mm	
....4	R898	2008-000290	R-FUSIBLE(S);2.4ohm,5%,2W,AF,TP,3.9x10mm	
....4	R303	2008-001013	R-FUSIBLE(S);1.2ohm,5%,2W,AF,TP,3.9x10mm	
....4	R304	2008-001015	R-FUSIBLE(S);1.5ohm,5%,2W,AF,TP,3.9x10mm	
....4	R418	2008-001023	R-FUSIBLE;3.3ohm,5%,1/2W,AF,TP,2.5x6.5mm	
....4	R561	2008-001053	R-FUSIBLE;22ohm,5%,1/2W,AF,TP,2.5x6.5mm	
....4	R828	2008-001138	R-FUSIBLE;2.4OHM,5%,1W,AF,TP,3.9X10MM	
....4	FD801A	2008-001160	R-PICO FUSIBLE;20mohm,20%,1W,AA,TP,2.3x6	
⚠ 4	FD802S	2008-001163	R-PICO FUSIBLE;10mohm,20%,1W,AA,TP,2.3x6	
....4	R0251	2009-000021	R-METAL PLATE;0.33ohm,10%,5W,CL,TP,5x14x	
....4	R0251	2009-000026	R-METAL PLATE;0.15OHM,10%,5W,CL,TP,5X14X	
....4	C598	2201-000132	C-CERAMIC,DISC;0.1NF,10%,500V,Y5P,TP,6.5	
....4	C598	2201-000192	C-CERAMIC,DISC;0.01NF,0.25PF,500V,C0G,TP	
....4	C598	2201-000291	C-CERAMIC,DISC;1NF,10%,500V,Y5P,TP,7.5X3	
....4	C598	2201-000332	C-CERAMIC,DISC;2.2NF,20%,250V,Y5U,TP,9X4	
....4	C598	2201-000332	C-CERAMIC,DISC;2.2NF,20%,250V,Y5U,TP,9X4	
....4	C598	2201-000374	C-CERAMIC,DISC;0.22NF,5%,50V,C0G,TP,10.5	
....4	C598	2201-000389	C-CERAMIC,DISC;0.022NF,5%,50V,C0G,TP,5X3	
....4	C598	2201-000389	C-CERAMIC,DISC;0.022NF,5%,50V,C0G,TP,5X3	
....4	C598	2201-000406	C-CERAMIC,DISC;0.27NF,10%,2KV,Y5P,TP,6.3	
....4	C598	2201-000556	C-CERAMIC,DISC;0.47NF,10%,500V,Y5P,TP,5.	
....4	C598	2201-000556	C-CERAMIC,DISC;0.47NF,10%,500V,Y5P,TP,5.	
....4	C598	2201-000556	C-CERAMIC,DISC;0.47NF,10%,500V,Y5P,TP,5.	
....4	C598	2201-000556	C-CERAMIC,DISC;0.47NF,10%,500V,Y5P,TP,5.	
....4	C598	2201-000556	C-CERAMIC,DISC;0.47NF,10%,500V,Y5P,TP,5.	
....4	C598	2201-000599	C-CERAMIC,DISC;0.56NF,10%,500V,Y5P,TP,5.	
....4	C598	2201-000599	C-CERAMIC,DISC;0.56NF,10%,500V,Y5P,TP,5.	
....4	C689	2202-000121	C-CERAMIC,MLC-AXIAL;100pF,10%,50V,Y5P,TP	
....4	C689	2202-000121	C-CERAMIC,MLC-AXIAL;100pF,10%,50V,Y5P,TP	
....4	C689	2202-000216	C-CERAMIC,MLC-AXIAL;0.027NF,5%,50V,SL,TP	
....4	C689	2202-000216	C-CERAMIC,MLC-AXIAL;0.027NF,5%,50V,SL,TP	
....4	C689	2202-000231	C-CERAMIC,MLC-AXIAL;0.33NF,10%,50V,Y5P,T	
....4	C689	2202-000231	C-CERAMIC,MLC-AXIAL;0.33NF,10%,50V,Y5P,T	
....4	C689	2202-000231	C-CERAMIC,MLC-AXIAL;0.33NF,10%,50V,Y5P,T	
....4	C689	2202-000231	C-CERAMIC,MLC-AXIAL;0.33NF,10%,50V,Y5P,T	
....4	C689	2202-000231	C-CERAMIC,MLC-AXIAL;0.33NF,10%,50V,Y5P,T	
....4	C689	2202-000231	C-CERAMIC,MLC-AXIAL;0.33NF,10%,50V,Y5P,T	
....4	C689	2202-000231	C-CERAMIC,MLC-AXIAL;0.33NF,10%,50V,Y5P,T	
....4	C689	2202-000231	C-CERAMIC,MLC-AXIAL;0.33NF,10%,50V,Y5P,T	
....4	C689	2202-000231	C-CERAMIC,MLC-AXIAL;0.33NF,10%,50V,Y5P,T	
....4	C689	2202-000231	C-CERAMIC,MLC-AXIAL;0.33NF,10%,50V,Y5P,T	
....4	C689	2202-000243	C-CERAMIC,MLC-AXIAL;33pF,5%,50V,SL,TP,3.	
....4	C689	2202-000243	C-CERAMIC,MLC-AXIAL;33pF,5%,50V,SL,TP,3.	
....4	C689	2202-000243	C-CERAMIC,MLC-AXIAL;33pF,5%,50V,SL,TP,3.	
....4	C689	2202-000796	C-CERAMIC,MLC-AXIAL;1NF,10%,50V,Y5P,TP,3	
....4	C689	2202-000796	C-CERAMIC,MLC-AXIAL;1NF,10%,50V,Y5P,TP,3	
....4	C689	2202-000796	C-CERAMIC,MLC-AXIAL;1NF,10%,50V,Y5P,TP,3	
....4	C689	2202-000796	C-CERAMIC,MLC-AXIAL;1NF,10%,50V,Y5P,TP,3	
....4	C689	2202-000796	C-CERAMIC,MLC-AXIAL;1NF,10%,50V,Y5P,TP,3	
....4	C689	2202-000796	C-CERAMIC,MLC-AXIAL;1NF,10%,50V,Y5P,TP,3	
....4	C689	2202-000796	C-CERAMIC,MLC-AXIAL;1NF,10%,50V,Y5P,TP,3	
....4	C689	2202-000796	C-CERAMIC,MLC-AXIAL;1NF,10%,50V,Y5P,TP,3	
....4	C689	2202-000796	C-CERAMIC,MLC-AXIAL;1NF,10%,50V,Y5P,TP,3	
....4	C689	2202-000796	C-CERAMIC,MLC-AXIAL;1NF,10%,50V,Y5P,TP,3	
....4	C689	2202-000796	C-CERAMIC,MLC-AXIAL;1NF,10%,50V,Y5P,TP,3	
....4	C689	2202-000796	C-CERAMIC,MLC-AXIAL;1NF,10%,50V,Y5P,TP,3	
....4	C689	2202-000796	C-CERAMIC,MLC-AXIAL;1NF,10%,50V,Y5P,TP,3	
....4	C689	2202-000796	C-CERAMIC,MLC-AXIAL;1NF,10%,50V,Y5P,TP,3	
....4	C689	2202-000806	C-CERAMIC,MLC-AXIAL;220pF,10%,50V,Y5P,TP	
....4	C689	2202-000806	C-CERAMIC,MLC-AXIAL;220pF,10%,50V,Y5P,TP	
....4	C689	2202-000806	C-CERAMIC,MLC-AXIAL;220pF,10%,50V,Y5P,TP	
....4	C689	2202-000863	C-CERAMIC,MLC-AXIAL;560pF,10%,50V,Y5P,TP	
....4	C689	2202-002009	C-CERAMIC,MLC-AXIAL;100NF,+80-20%,50V,Y5	
....4	C689	2202-002037	C-CERAMIC,MLC-AXIAL;100nF,80-20%,50V,Y5V	
....4	C2560	2301-000192	C-FILM,LEAD-PEF;1nF,5%,50V,TP,5.3x10mm,5	
....4	C2560	2301-000224	C-FILM,LEAD-PEF;22nF,5%,50V,TP,7.4x3.9x1	
....4	C2560	2301-000224	C-FILM,LEAD-PEF;22nF,5%,50V,TP,7.4x3.9x1	
....4	C2560	2301-000224	C-FILM,LEAD-PEF;22nF,5%,50V,TP,7.4x3.9x1	
....4	C2560	2301-000342	C-FILM,LEAD-PEF;2.2nF,5%,50V,TP,7.4x3.9x	

Level	Loc.No.	Code No.	Description;Specification	Remark
....4	C2560	2301-000356	C-FILM,LEAD-PEF;47nF,5%,50V,TP,7.5x4.0x6	
....4	C2560	2301-000383	C-FILM,LEAD-PEF;10nF,5%,50V,TP,6x7x3.2mm	
....4	C2560	2301-000383	C-FILM,LEAD-PEF;10nF,5%,50V,TP,6x7x3.2mm	
....4	C2560	2301-000383	C-FILM,LEAD-PEF;10nF,5%,50V,TP,6x7x3.2mm	
....4	C2560	2301-000383	C-FILM,LEAD-PEF;10nF,5%,50V,TP,6x7x3.2mm	
....4	C807	2301-001342	C-FILM,LEAD-PPF;1.5nF,5%,800V,TP,15x6.5x	
⚠....4	CR404S	2303-001001	C-FILM,LEAD-PPF;22nF,5%,630V,TP,18x14.5x	
....4	C2560	2305-000237	C-FILM,LEAD-PEF;1uF,5%,63V,TP,7.5x15.5mm	
....4	C2560	2305-000285	C-FILM,LEAD-PEF;220NF,5%,100V,TP,10.5X5.	
....4	C2560	2305-000289	C-FILM,LEAD-PEF;220nF,5%,63V,TP,-,5mm	
....4	C2560	2305-000289	C-FILM,LEAD-PEF;220nF,5%,63V,TP,-,5mm	
....4	C2560	2305-000382	C-FILM,LEAD-PEF;4.7nF,5%,400V,TP,-,5mm	
....4	C2560	2305-000411	C-FILM,LEAD-PEF;470nF,5%,50V,TP,7.3x4.8x	
....4	C2560	2305-000411	C-FILM,LEAD-PEF;470nF,5%,50V,TP,7.3x4.8x	
....4	C2560	2305-000411	C-FILM,LEAD-PEF;470nF,5%,50V,TP,7.3x4.8x	
....4	C2560	2305-000411	C-FILM,LEAD-PEF;470nF,5%,50V,TP,7.3x4.8x	
....4	C2560	2305-000412	C-FILM,LEAD-PEF;470nF,5%,63V,TP,-,5mm	
....4	C2560	2305-000412	C-FILM,LEAD-PEF;470nF,5%,63V,TP,-,5mm	
....4	C2560	2305-000665	C-FILM,LEAD-PEF;100nF,5%,63V,TP,7.5x4.0x

Level	Loc.No.	Code No.	Description;Specification	Remark
....4	EY808	6042-000002	EYELET;ID1.5,OD2,L2.8,NI+SN,BSP3-1/2H	S.N.A
....4	EY809	6042-000002	EYELET;ID1.5,OD2,L2.8,NI+SN,BSP3-1/2H	S.N.A
....4	EY810	6042-000002	EYELET;ID1.5,OD2,L2.8,NI+SN,BSP3-1/2H	S.N.A
....4	EY811	6042-000002	EYELET;ID1.5,OD2,L2.8,NI+SN,BSP3-1/2H	S.N.A
....4	EY812	6042-000002	EYELET;ID1.5,OD2,L2.8,NI+SN,BSP3-1/2H	S.N.A
....4	EY813	6042-000002	EYELET;ID1.5,OD2,L2.8,NI+SN,BSP3-1/2H	S.N.A
....4	EY814	6042-000002	EYELET;ID1.5,OD2,L2.8,NI+SN,BSP3-1/2H	S.N.A
....4	EY815	6042-000002	EYELET;ID1.5,OD2,L2.8,NI+SN,BSP3-1/2H	S.N.A
....4	EY816	6042-000002	EYELET;ID1.5,OD2,L2.8,NI+SN,BSP3-1/2H	S.N.A
....4	EY817	6042-000002	EYELET;ID1.5,OD2,L2.8,NI+SN,BSP3-1/2H	S.N.A
....4	EY818	6042-000002	EYELET;ID1.5,OD2,L2.8,NI+SN,BSP3-1/2H	S.N.A
....4	EY819	6042-000002	EYELET;ID1.5,OD2,L2.8,NI+SN,BSP3-1/2H	S.N.A
....4	EY821	6042-000002	EYELET;ID1.5,OD2,L2.8,NI+SN,BSP3-1/2H	S.N.A
....4	EY822	6042-000002	EYELET;ID1.5,OD2,L2.8,NI+SN,BSP3-1/2H	S.N.A
....4	EY823	6042-000002	EYELET;ID1.5,OD2,L2.8,NI+SN,BSP3-1/2H	S.N.A
....4	EY824	6042-000002	EYELET;ID1.5,OD2,L2.8,NI+SN,BSP3-1/2H	S.N.A
....4	EY826	6042-000002	EYELET;ID1.5,OD2,L2.8,NI+SN,BSP3-1/2H	S.N.A
....4	EY827	6042-000002	EYELET;ID1.5,OD2,L2.8,NI+SN,BSP3-1/2H	S.N.A
....4	EY828	6042-000002	EYELET;ID1.5,OD2,L2.8,NI+SN,BSP3-1/2H	S.N.A
....4	EY829	6042-000002	EYELET;ID1.5,OD2,L2.8,NI+SN,BSP3-1/2H	S.N.A
....4	EY830	6042-000002	EYELET;ID1.5,OD2,L2.8,NI+SN,BSP3-1/2H	S.N.A
....4	EY831	6042-000002	EYELET;ID1.5,OD2,L2.8,NI+SN,BSP3-1/2H	S.N.A
....4	EY832	6042-000002	EYELET;ID1.5,OD2,L2.8,NI+SN,BSP3-1/2H	S.N.A
....4	EY833	6042-000002	EYELET;ID1.5,OD2,L2.8,NI+SN,BSP3-1/2H	S.N.A
....4	EY834	6042-000002	EYELET;ID1.5,OD2,L2.8,NI+SN,BSP3-1/2H	S.N.A
....4	EY835	6042-000002	EYELET;ID1.5,OD2,L2.8,NI+SN,BSP3-1/2H	S.N.A
....4	EY836	6042-000002	EYELET;ID1.5,OD2,L2.8,NI+SN,BSP3-1/2H	S.N.A
....4	EY837	6042-000002	EYELET;ID1.5,OD2,L2.8,NI+SN,BSP3-1/2H	S.N.A
....4	EY838	6042-000002	EYELET;ID1.5,OD2,L2.8,NI+SN,BSP3-1/2H	S.N.A
....4	EY839	6042-000002	EYELET;ID1.5,OD2,L2.8,NI+SN,BSP3-1/2H	S.N.A
....4	EY840	6042-000002	EYELET;ID1.5,OD2,L2.8,NI+SN,BSP3-1/2H	S.N.A
....4	EY841	6042-000002	EYELET;ID1.5,OD2,L2.8,NI+SN,BSP3-1/2H	S.N.A
....4	EY842	6042-000002	EYELET;ID1.5,OD2,L2.8,NI+SN,BSP3-1/2H	S.N.A
....4	EY843	6042-000002	EYELET;ID1.5,OD2,L2.8,NI+SN,BSP3-1/2H	S.N.A
....4	EY844	6042-000002	EYELET;ID1.5,OD2,L2.8,NI+SN,BSP3-1/2H	S.N.A
....4	EY845	6042-000002	EYELET;ID1.5,OD2,L2.8,NI+SN,BSP3-1/2H	S.N.A
....4	EY846	6042-000002	EYELET;ID1.5,OD2,L2.8,NI+SN,BSP3-1/2H	S.N.A
....4	EY847	6042-000002	EYELET;ID1.5,OD2,L2.8,NI+SN,BSP3-1/2H	S.N.A
....4	EY848	6042-000002	EYELET;ID1.5,OD2,L2.8,NI+SN,BSP3-1/2H	S.N.A
....4	EY849	6042-000002	EYELET;ID1.5,OD2,L2.8,NI+SN,BSP3-1/2H	S.N.A
....4	EY850	6042-000002	EYELET;ID1.5,OD2,L2.8,NI+SN,BSP3-1/2H	S.N.A
....4	EY851	6042-000002	EYELET;ID1.5,OD2,L2.8,NI+SN,BSP3-1/2H	S.N.A
....4	EY852	6042-000002	EYELET;ID1.5,OD2,L2.8,NI+SN,BSP3-1/2H	S.N.A
....4	EY853	6042-000002	EYELET;ID1.5,OD2,L2.8,NI+SN,BSP3-1/2H	S.N.A
....4	EY854	6042-000002	EYELET;ID1.5,OD2,L2.8,NI+SN,BSP3-1/2H	S.N.A
....4	EY855	6042-000002	EYELET;ID1.5,OD2,L2.8,NI+SN,BSP3-1/2H	S.N.A
....4	EY856	6042-000002	EYELET;ID1.5,OD2,L2.8,NI+SN,BSP3-1/2H	S.N.A
....4	EY857	6042-000002	EYELET;ID1.5,OD2,L2.8,NI+SN,BSP3-1/2H	S.N.A
....4	EY858	6042-000002	EYELET;ID1.5,OD2,L2.8,NI+SN,BSP3-1/2H	S.N.A
....4	EY859	6042-000002	EYELET;ID1.5,OD2,L2.8,NI+SN,BSP3-1/2H	S.N.A
....4	EY862	6042-000002	EYELET;ID1.5,OD2,L2.8,NI+SN,BSP3-1/2H	S.N.A
....4	EY863	6042-000002	EYELET;ID1.5,OD2,L2.8,NI+SN,BSP3-1/2H	S.N.A
....4	EY864	6042-000002	EYELET;ID1.5,OD2,L2.8,NI+SN,BSP3-1/2H	S.N.A
....4	EY865	6042-000002	EYELET;ID1.5,OD2,L2.8,NI+SN,BSP3-1/2H	S.N.A
....4	EY866	6042-000002	EYELET;ID1.5,OD2,L2.8,NI+SN,BSP3-1/2H	S.N.A
....4	EY867	6042-000002	EYELET;ID1.5,OD2,L2.8,NI+SN,BSP3-1/2H	S.N.A
....4	EY869	6042-000002	EYELET;ID1.5,OD2,L2.8,NI+SN,BSP3-1/2H	S.N.A
....4	EY870	6042-000002	EYELET;ID1.5,OD2,L2.8,NI+SN,BSP3-1/2H	S.N.A
....4	EY871	6042-000002	EYELET;ID1.5,OD2,L2.8,NI+SN,BSP3-1/2H	S.N.A
....4	EY872	6042-000002	EYELET;ID1.5,OD2,L2.8,NI+SN,BSP3-1/2H	S.N.A
....4	EY873	6042-000002	EYELET;ID1.5,OD2,L2.8,NI+SN,BSP3-1/2H	S.N.A
....4	EY874	6042-000002	EYELET;ID1.5,OD2,L2.8,NI+SN,BSP3-1/2H	S.N.A
....4	EY875	6042-000002	EYELET;ID1.5,OD2,L2.8,NI+SN,BSP3-1/2H	S.N.A
....4	EY876	6042-000002	EYELET;ID1.5,OD2,L2.8,NI+SN,BSP3-1/2H	S.N.A
....4	EY877	6042-000002	EYELET;ID1.5,OD2,L2.8,NI+SN,BSP3-1/2H	S.N.A
....4	EY878	6042-000002	EYELET;ID1.5,OD2,L2.8,NI+SN,BSP3-1/2H	S.N.A
....4	EY879	6042-000002	EYELET;ID1.5,OD2,L2.8,NI+SN,BSP3-1/2H	S.N.A
....4	EY880	6042-000002	EYELET;ID1.5,OD2,L2.8,NI+SN,BSP3-1/2H	S.N.A
....4	EY881	6042-000002	EYELET;ID1.5,OD2,L2.8,NI+SN,BSP3-1/2H	S.N.A
....4	EY882	6042-000002	EYELET;ID1.5,OD2,L2.8,NI+SN,BSP3-1/2H	S.N.A
....4	EY883	6042-000002	EYELET;ID1.5,OD2,L2.8,NI+SN,BSP3-1/2H	S.N.A
....4	FT401	AA37-00001A	CONNECTOR-FBT FIX PIN;JM-3500,CPTTV,0.36	
....4	FT402	AA37-00001A	CONNECTOR-FBT FIX PIN;JM-3500,CPTTV,0.36	
....4	GT404	AA60-40014A	PIN-GT,ASSY;AUTO	S.N.A
....4	GT406	AA60-40014A	PIN-GT,ASSY;AUTO	S.N.A
....4	GT801	AA60-40014A	PIN-GT,ASSY;AUTO	S.N.A
....4	GT802	AA60-40014A	PIN-GT,ASSY;AUTO	S.N.A

Level	Loc.No.	Code No.	Description;Specification	Remark
....4	GT803	AA60-40014A	PIN-GT,ASSY;AUTO	S.N.A
....4	GT804	AA60-40014A	PIN-GT,ASSY;AUTO	S.N.A
....4	GT805	AA60-40014A	PIN-GT,ASSY;AUTO	S.N.A
....4	GT806	AA60-40014A	PIN-GT,ASSY;AUTO	S.N.A
....4	GTT01	AA60-40014A	PIN-GT,ASSY;AUTO	S.N.A
....4	GTT02	AA60-40014A	PIN-GT,ASSY;AUTO	S.N.A
....4	GTT04	AA60-40014A	PIN-GT,ASSY;AUTO	S.N.A
....4	GTT06	AA60-40014A	PIN-GT,ASSY;AUTO	S.N.A
....4	DZ016	0403-000510	DIODE-ZENER;MTZJ6.2B,5.96-6.27V,500MW,DO	
....4	DZ016	0403-000716	DIODE-ZENER;MTZJ4.7B,4.59-4.77V,500MW,DO	
....4	R075	2001-001050	R-CARBON(S);1.5KOHM,5%,1/2W,AA,TP,2.4X6.	
....4	R075	2001-001195	R-CARBON(S);82OHM,5%,1/2W,AA,TP,2.4X6.4M	
....4	C598	2201-000558	C-CERAMIC,DISC;0.47NF,10%,50V,Y5P,TP,5X3	
....4	0	AA41-01024D	PCB MAIN;CT-29K10G,1,D,FR-1,245*330*1.6,	S.N.A
....4	CN906	3711-002643	CONNECTOR-HEADER;BOX,4P,1R,2.5mm,STRAIGH	
...3	IC504	BH99-00007T	ASSY HEAT/SINK;BH62-00007A,SCREW,TDA2030	S.N.A
....4	H/S	0205-001154	OIL-SILICON;G746,-,-	S.N.A
....4	DU410	1201-000010	IC-OP AMP;2030,PENTAWATT,5P,-,SINGLE,-,C	
....4	T0081	6003-000334	SCREW-TAPTITE;RH,+,2S,M3,L6,ZPC(YEL),SWR	S.N.A
....4	H/S	BH62-00007A	HEAT SINK-TR;-,T1.0,L20*H30,CDA	S.N.A
...3	IC602	AA96-02124A	ASSY HEAT SINK P;AA62-30182G,SCREW,TDA72	S.N.A
....4	H/S	0205-001154	OIL-SILICON;G746,-,-	S.N.A
....4	T0085	1201-002118	IC-AUDIO AMP;TDA7297SA,ZIP,15P,-,DUAL,32	
....4	T0081	6003-000333	SCREW-TAPTITE;RH,+,2S,M3,L10,ZPC(YEL),SW	S.N.A
....4	H/S	AA61-01390A	BRACKET-IC;CT-29A20HR,SECC,T1.0	S.N.A
....4	H/S	AA62-30182G	HEAT SINK-ES;CT-29A20HR,A6063S,T2.0,26.2	S.N.A
...3	M0018	AA97-15547C	ASSY MICOM;,KS7A,GOLD RUSH,VCT49XX,T-GRN	
....4	T0119	AA09-00441A	IC MICOM;VCT4942,ONE CHIP,88P,1.8/3.3/5/	S.N.A
...3	DZ016	0403-000714	DIODE-ZENER;MTZJ3.3B,3.32-3.53V,500MW,DO	
..2	T0098	AA94-14788A	ASSY PCB MISC-TACT S/W,CONTROL;CL29M21MQ	
...3		0202-001366	SOLDER-WIRE FLUX;-,RS60S,D1.2,63Sn/37Pb,	S.N.A
...3	LDY02	0601-000262	LED;ROUND,RED,5mm,700nm	
...3	D0254	AA32-00012A	MODULE REMOCON;ORC-50HF2,38KHZ,940NM,MES	
...3	T0245	AA39-00385A	LEAD CONNECTOR-ASSY;GOLR RUSH,UL1007#26,	
...3	T0245	AA39-20050A	LEAD CONNECTOR-ASSY;,3P,200,YBNH250-03,Y	
...3		AA97-15540A	ASSY AUTO;CL21M21PQUXXAZ,KS7A	S.N.A
⚠ 4	CISS	0401-000005	DIODE-SWITCHING;1N4148,75V,150MA,DO-35,T	
⚠ 4	CISS	0401-000005	DIODE-SWITCHING;1N4148,75V,150MA,DO-35,T	
....4	DZ016	0403-000508	DIODE-ZENER;MTZJ5.6B,5.45-5.73V,500MW,DO	
....4	DZ016	0403-000508	DIODE-ZENER;MTZJ5.6B,5.45-5.73V,500MW,DO	
....4	R125	2001-000007	R-CARBON;3KOHM,5%,1/8W,AA,TP,1.8X3.2MM	
....4	R125	2001-000009	R-CARBON;20KOHM,5%,1/8W,AA,TP,1.8X3.2MM	
....4	R075	2001-000020	R-CARBON(S);22OHM,5%,1/2W,AA,TP,2.4X6.4M	
....4	R125	2001-000281	R-CARBON;100OHM,5%,1/8W,AA,TP,1.8X3.2MM	
....4	R125	2001-000577	R-CARBON;2KOHM,5%,1/8W,AA,TP,1.8X3.2MM	
....4	R125	2001-000878	R-CARBON;6.2KOHM,5%,1/8W,AA,TP,1.8X3.2MM	
....4	C701	2401-002291	C-AL;47uF,20%,16V,GP,TP,6.3x5,5	
....4	SW07	3404-000243	SWITCH-TACT;15V,20mA,160gf+-50gf,6x3.4mm	
....4	SWY02	3404-000243	SWITCH-TACT;15V,20mA,160gf+-50gf,6x3.4mm	
....4	SWY03	3404-000243	SWITCH-TACT;15V,20mA,160gf+-50gf,6x3.4mm	
....4	SWY04	3404-000243	SWITCH-TACT;15V,20mA,160gf+-50gf,6x3.4mm	
....4	SWY05	3404-000243	SWITCH-TACT;15V,20mA,160gf+-50gf,6x3.4mm	
....4	SWY06	3404-000243	SWITCH-TACT;15V,20mA,160gf+-50gf,6x3.4mm	
....4	0	AA41-01085A	PCB-TACT SWITCH;M21,FR-1,1,A,245*245*1.6	S.N.A
..2	T0065	AA94-13502B	ASSY PCB CRT;CL29Z6,29M21PQUX/XAZ,KS7A,G	
...3		0202-001366	SOLDER-WIRE FLUX;-,RS60S,D1.2,63Sn/37Pb,	S.N.A
...3	V999A	3704-001197	SOCKET-CRT;8P+SEN,29PI,22.5PI,NI+SN,-	
...3	CN906	3711-000024	CONNECTOR-HEADER;BOX,3P,1R,2.5mm,STRAIGH	
...3	CN906	3711-002641	CONNECTOR-HEADER;BOX,10P,1R,2.5MM,STRAIG	
...3	IC063	AA13-00111A	IC HYBRID;STK396-130,WT-32A20HD,12,105C,	
...3	T0245	AA39-00225A	LEAD CONNECTOR-ASSY;,10P,600MM,67096-010	
...3	T0245	AA39-20010B	LEAD CONNECTOR-ASSY;,1P,500,YFH800-01,S,	
...3	T0245	AA39-20010B	LEAD CONNECTOR-ASSY;,1P,500,YFH800-01,S,	
...3	T0245	AA39-20029K	LEAD CONNECTOR-ASSY;,7P,400,67096-007,S,	
...3	IC501	AA96-50311N	ASSY HEAT SINK P;AA62-30175D,TDA6109JF,S	S.N.A
....4	T0074	1201-002114	IC-VIDEO AMP;TDA6109JF,SDIP,9P,18.5mm,-,	
....4	T0081	6003-000334	SCREW-TAPTITE;RH,+,2S,M3,L6,ZPC(YEL),SWR	S.N.A
....4	H/S	AA62-30175D	HEAT SINK-PS;-,SECC,T1.0,-,33X15X30 FT-2	S.N.A
...3		AA97-15532B	ASSY AUTO-CRT;CL29Z6,29M21PQUX/XAZ,KS7A,	S.N.A
....4	T0083	0402-000254	DIODE-RECTIFIER;RGP10J,600V,1A,DO-41,TP	
....4	T0083	0402-000546	DIODE-RECTIFIER;TVR10G,400V,1.0A,DO-41,T	
....4	T0083	0402-000546	DIODE-RECTIFIER;TVR10G,400V,1.0A,DO-41,T	
....4	T0083	0402-000546	DIODE-RECTIFIER;TVR10G,400V,1.0A,DO-41,T	
....4	T0083	0402-000546	DIODE-RECTIFIER;TVR10G,400V,1.0A,DO-41,T	
....4	T0083	0402-000546	DIODE-RECTIFIER;TVR10G,400V,1.0A,DO-41,T	
....4	T0083	0402-000546	DIODE-RECTIFIER;TVR10G,400V,1.0A,DO-41,T	

Level	Loc.No.	Code No.	Description;Specification	Remark
....4	DZ016	0403-001211	DIODE-ZENER;MTZJ12B,11.8-12.3V,500MW,DO-	
....4	DZ016	0403-001211	DIODE-ZENER;MTZJ12B,11.8-12.3V,500MW,DO-	
....4	DZ016	0403-001211	DIODE-ZENER;MTZJ12B,11.8-12.3V,500MW,DO-	
....4	DZ016	0403-001211	DIODE-ZENER;MTZJ12B,11.8-12.3V,500MW,DO-	
....4	T0156	0501-000283	TR-SMALL SIGNAL;KSA539,PNP,400mW,TO-92,T	
....4	T0156	0501-000389	TR-SMALL SIGNAL;KSC815,NPN,400mW,TO-92,T	
....4	R125	2001-000281	R-CARBON;100OHM,5%,1/8W,AA,TP,1.8X3.2MM	
....4	R125	2001-000281	R-CARBON;100OHM,5%,1/8W,AA,TP,1.8X3.2MM	
....4	R125	2001-000281	R-CARBON;100OHM,5%,1/8W,AA,TP,1.8X3.2MM	
....4	R125	2001-000411	R-CARBON;18KOHM,5%,1/8W,AA,TP,1.8X3.2MM	
....4	R125	2001-000449	R-CARBON;2.2KOHM,5%,1/8W,AA,TP,1.8X3.2MM	
....4	R125	2001-000522	R-CARBON;22KOHM,5%,1/8W,AA,TP,1.8X3.2MM	
....4	R125	2001-000534	R-CARBON;240OHM,5%,1/8W,AA,TP,1.8X3.2MM	
....4	R125	2001-000761	R-CARBON;430OHM,5%,1/8W,AA,TP,1.8X3.2MM	
....4	R125	2001-000989	R-CARBON;820KOHM,5%,1/8W,AA,TP,1.8X3.2MM	
....4	R075	2001-001062	R-CARBON(S);10MOHM,5%,1/2W,AA,TP,2.4X6.4	
....4	R075	2001-001175	R-CARBON(S);62OHM,5%,1/2W,AA,TP,2.4X6.4M	
....4	R0521	2002-001008	R-COMPOSITION;1.8Kohm,10%,1/2W,AA,TP,3.7	
....4	R0521	2002-001008	R-COMPOSITION;1.8Kohm,10%,1/2W,AA,TP,3.7	
....4	R0521	2002-001008	R-COMPOSITION;1.8Kohm,10%,1/2W,AA,TP,3.7	
....4	RF10	2003-000458	R-METAL OXIDE(S);100ohm,5%,2W,AF,TP,4x12	
....4	RF03	2003-000995	R-METAL OXIDE(S);3.3Kohm,5%,2W,AF,TP,3.9	
....4	RF04	2003-000995	R-METAL OXIDE(S);3.3Kohm,5%,2W,AF,TP,3.9	
....4	RF05	2003-000995	R-METAL OXIDE(S);3.3Kohm,5%,2W,AF,TP,3.9	
....4	RF06	2003-000995	R-METAL OXIDE(S);3.3Kohm,5%,2W,AF,TP,3.9	
....4	RF07	2003-000998	R-METAL OXIDE;300ohm,5%,2W,AF,TP,3.9x10m	
....4	RF02	2003-001093	R-METAL OXIDE(S);12Kohm,5%,2W,AF,TP,3.9x	
....4	R516	2008-000205	R-FUSIBLE(S);10ohm,5%,1/2W,AF,TP,2.5x6.5	
....4	R514	2008-001015	R-FUSIBLE(S);1.5ohm,5%,2W,AF,TP,3.9x10mm	
....4	C598	2201-000017	C-CERAMIC,DISC;1NF,10%,50V,Y5P,TP,5X3.5M	
....4	C598	2201-000019	C-CERAMIC,DISC;10nF,+80-20%,500V,Y5V,TP,	
....4	C598	2201-000604	C-CERAMIC,DISC;0.056NF,+100-0%,500V,SL,T	
....4	C598	2201-000723	C-CERAMIC,DISC;4.7NF,20%,3KV,Y5U,TP,16X5	
....4	C598	2201-002103	C-CERAMIC,DISC;0.015NF,5%,500V,C0G,TP,6.	
....4	C2560	2301-000383	C-FILM,LEAD-PEF;10nF,5%,50V,TP,6x7x3.2mm	
....4	C508	2301-001259	C-FILM,LEAD-PPF;100nF,5%,400V,TP,19x8x16	
....4	C701	2401-000025	C-AL;100uF,20%,16V,GP,TP,6.3x11,5	
....4	C701	2401-000025	C-AL;100uF,20%,16V,GP,TP,6.3x11,5	
....4	C701	2401-000045	C-AL;10uF,20%,160V,GP,TP,10x16,5	
....4	C701	2401-000045	C-AL;10uF,20%,160V,GP,TP,10x16,5	
....4	C701	2401-000287	C-AL;100uF,20%,16V,WT,TP,6.3x11,5	
....4	C701	2401-000430	C-AL;10uF,20%,250V,GP,TP,10x16mm,5m	
....4	C701	2401-000832	C-AL;220uF,20%,25V,GP,TP,8x11.5,5	
....4	C701	2401-000832	C-AL;220uF,20%,25V,GP,TP,8x11.5,5	
....4	C701	2401-001563	C-AL;47uF,20%,400V,GP,TP,16x25,7.5	
....4	LF02	2701-000112	INDUCTOR-AXIAL;100UH,10%,3070	
....4	L502	2701-000178	INDUCTOR-AXIAL;33UH,10%,3070	
....4	F101	2901-000297	FILTER-EMI ON BOARD;-,3A,-,-,3.5x5,TP,-	
....4	F101	2901-000297	FILTER-EMI ON BOARD;-,3A,-,-,3.5x5,TP,-	
....4	L2514	3301-000287	BEAD-AXIAL;,3.5x1.0x6.0mm,3000mA,TP,,,50	
....4	CN906	3711-002642	CONNECTOR-HEADER;BOX,3P,1R,2.5mm,STRAIGH	
....4	CN906	3711-002646	CONNECTOR-HEADER;BOX,7P,1R,2.5mm,STRAIGH	
....4	LX085	AA27-90001B	COIL-SPARK,GAP;S-23,1.5KV,-,-,-,-,-,-,-,	
....4	LX085	AA27-90001B	COIL-SPARK,GAP;S-23,1.5KV,-,-,-,-,-,-,-,	
....4	LX085	AA27-90001B	COIL-SPARK,GAP;S-23,1.5KV,-,-,-,-,-,-,-,	
....4	LX085	AA27-90001B	COIL-SPARK,GAP;S-23,1.5KV,-,-,-,-,-,-,-,	
....4	LX085	AA27-90001B	COIL-SPARK,GAP;S-23,1.5KV,-,-,-,-,-,-,-,	
....4	LX085	AA27-90001B	COIL-SPARK,GAP;S-23,1.5KV,-,-,-,-,-,-,-,	
....4	LX085	AA27-90001B	COIL-SPARK,GAP;S-23,1.5KV,-,-,-,-,-,-,-,	
....4	0	AA41-01025A	PCB CRT;,FR-1,1L,A,1.6T,245X245,KS7A,4A,	S.N.A
....4	GT501	AA60-40014A	PIN-GT,ASSY;AUTO	S.N.A
....4	GT504	AA60-40014A	PIN-GT,ASSY;AUTO	S.N.A
....4	GT505	AA60-40014A	PIN-GT,ASSY;AUTO	S.N.A
....4	GT507	AA60-40014A	PIN-GT,ASSY;AUTO	S.N.A
...3	M2893	BH39-00253E	LEAD CONNECTOR;GOLD RUSH,UL1007#26,3P,50	
...3		AA63-10002A	BAND-TIE;NYLON66 V2,L100,NTR	S.N.A

ASSY FIXING

1		AA91-08458C	ASSY FIXING;CL29M21MQUXXAZ,KS7A	S.N.A
..2		3811-001609	WIRE-PVC CU;BCWA,300V,ROLL,-,#22,BLK	S.N.A
⚠..2	T0268	AA39-10006X	CBF-POWER CORD;-,KKP419C,KLCE-2F,2.286MT	
..2	T0245	AA39-20010B	LEAD CONNECTOR-ASSY;,1P,500,YFH800-01,S,	
..2	T0010	AA61-20284A	HOLDER;P-CORD,PP,-,-,-,BLK,VO,KE-002	S.N.A
..2		AA65-30009A	CLAMPER CORE-FBT;-,ABS,V0,-,BLK,-	S.N.A
..2		AA65-30018A	CLAMPER CORE-WIRE;DONG-A,NYLON-66,-,-,-,	S.N.A
..2	CLAMP	AA65-30104C	CLAMPER CORE-WIRE;ALL MODEL,NYLON 66,V2,	S.N.A

ASSY P/MATERIAL

1		AA92-09960B	ASSY P/MATERIAL;29M21(SAMEX),(SEDA)	S.N.A
..2		6902-000001	BAG AIR;LDPE,T0.2,L1800,W1000,TRP,,,LDPE	S.N.A
..2		6902-000007	BAG PE;HDPE/NITRON/HDPE,T0.015/T0.5/T0.0	S.N.A
..2		6902-000061	BAG AIR;LDPE,T0.2,L1000,W500,TRP,,,	S.N.A
..2	T0214	AA60-40006A	PIN-STAPLE;AUTO,33X17.8X2.4,H18,33X17.8X	S.N.A
..2	T0172	AA69-02609A	BAND-PP;W18,CLEA,1G	S.N.A

ASSY ACCESSORY

1	M0045	AA92-10288A	ASSY ACCESSORY;CL29M21MQUXXAZ,KS7A	S.N.A
..2		6902-000009	BAG PE;HDPE,T0.03,L400,W240,TRP,8,2,PE M	S.N.A
..2	0	AA68-03242B	MANUAL-WARRANTY CARD;TH-ENG,SAFETY GUIDE	S.N.A
..2	T0074	AA59-00325E	REMOCON;GOLDRUSH,TM76A,KS7A,52MX,46,G614	
...3	TM76C	AA83-00097A	CKD-CASE TOP,C;TM76A,SEDA,AA59-00325C	S.N.A
...3	TM76	AA83-00098A	CKD-CASE BOTTOM;TM76A,SEDA,AA59-00325A	S.N.A
...3	TM76	AA83-00107A	CKD-DOOR COVER;TM76A,SEDA,AA59-00325A	S.N.A
...3	TM76	AA83-00114A	CKD-BATTERY-COVER;TM76A,SEDA,AA59-00325A	S.N.A
...3	TM76	AA83-00115A	CKD-WINDOW-RMC;TM76A,SEDA,AA59-00325A	S.N.A
...3	TM76E	AA83-00118A	CKD-INLAY PC,E;TM76A,SEDA,AA59-00325E	S.N.A
...3	TM76C	AA83-00120A	CKD-RUBBER-TOP,A;TM76A,SEDA,AA59-00325A	S.N.A
...3	TM76	AA83-00122A	CKD-SCREW-TH;TM76A,SEDA,AA59-00325A	S.N.A
...3	TM76C	AA83-00123A	CKD-INLAY-BACK,C;TM76A,SEDA,AA59-00325C	S.N.A
...3	TM76	AA83-00125A	CKD-RUBBER-BOTTOM;TM76A,SEDA,AA59-00325A	S.N.A
...3	TM76	AA83-00126A	CKD-SPRING-PLUS;TM76A,SEDA,AA59-00325A	S.N.A
...3	TM76	AA83-00127A	CKD-SPRING-MINUS;TM76A,SEDA,AA59-00325A	S.N.A
...3	TM76	AA83-00128A	CKD-SPRING-COMMON;TM76A,SEDA,AA59-00325A	S.N.A
...3	TM76	AA83-00139A	CKD-IR-LED;AA59-00325A,SI-5312H	S.N.A
...3	TM76	AA83-00140A	CKD-PCB;AA59-00325A,FR1-SILVER	S.N.A
...3	TM76	AA83-00141A	CKD-IC;AA59-00325A,Z86L88-52MX	S.N.A
...3	TM76	AA83-00142A	CKD-CHIP-RESISTOR;AA59-00325A,2012 5% T/	S.N.A
...3	TM76	AA83-00143A	CKD-CHIP-CAPACITOR;AA59-00325A,CS2012Y5N	S.N.A
...3	TM76	AA83-00144A	CKD-CHIP-RESISTOR;AA59-00325A,2012 5% T/	S.N.A
...3	TM76	AA83-00145A	CKD-CHIP-RESISTOR;AA59-00325A,2012 5%T/R	S.N.A
...3	TM76	AA83-00146A	CKD-CHIP-TRANSISTOR;AA59-00325A,STC3265Y	S.N.A
...3	TM76	AA83-00147A	CKD-CHIP-DIODE;AA59-00325A,BAV70	S.N.A
...3	TM76	AA83-00148A	CKD-ELE CONDENSOR;AA59-00325A,SG 1 6 V 4	S.N.A
...3	TM76	AA83-00149A	CKD-RESONATOR;AA59-00325A,Z T T 8 . 0 0M	S.N.A
...3	TM76	AA83-00150A	CKD-CHIP-LED;AA59-00325A,C - 1 9 0 C K T	S.N.A
...3	TM76	AA83-00151A	CKD-CHIP-LED;AA59-00325A,LTST-190GKT	S.N.A
...3	TM76	AA83-00153A	CKD-INDICATOR-LED;TM76A,SEDA,AA59-00325A	S.N.A
...3	PE-BAG	AA83-00154A	CKD-PE-BAG;TM76A,SEDA,AA59-00325A	S.N.A
...3	LABEL	AA83-00157A	CKD-LABEL QC;TM76A,SEDA,AA59-00325A	S.N.A
..2	T0511	AA68-03503A	MANUAL USERS;CL34Z6,SAMSUNG,BP,BRAZIL,MO	S.N.A

Yon can search for the updated part code through ITSELF web site.
URL:http://itself.sec.samsung.co.kr

5-4 CL29Z6PQUX/XAZ

ASSY COVER FRONT

Level	Loc.No.	Code No.	Description;Specification	Remark
1	M0001	AA90-05163C	ASSY COVER FRONT;CL29Z6PQUX/XAZ	S.N.A
..2	T0081	6002-000522	SCREW-TAPPING;TH,+,2,M4,L15,ZPC(BLK),SWR	S.N.A
..2	T0081	6003-001268	SCREW-TAPTITE;TH,+,B,M4,L12,ZPC(YEL),SWR	S.N.A
..2	T0081	6003-001268	SCREW-TAPTITE;TH,+,B,M4,L12,ZPC(YEL),SWR	S.N.A
..2	T0081	6003-001268	SCREW-TAPTITE;TH,+,B,M4,L12,ZPC(YEL),SWR	S.N.A
..2	T0081	AA60-10002A	SCREW-TAPPING;-,ZPC(YEL),M4,L12,RH,+,-,-	S.N.A
..2	T0081	AA60-10050T	SCREW-TAPPING;-,SWRCH18A,M4,L20,RH,+,2S,	S.N.A
..2	T0081	AA60-10050T	SCREW-TAPPING;-,SWRCH18A,M4,L20,RH,+,2S,	S.N.A
..2	T0081	AA60-10050T	SCREW-TAPPING;-,SWRCH18A,M4,L20,RH,+,2S,	S.N.A
..2	CRT+CF	AA60-10050V	BOLT-HEX;-,SWRCH18A,M6,L30,HH,+,WC,-,Z	S.N.A
..2		AA61-01316A	BRACKET-CRATER;29 ALL,STS304,T0.5,,,,	S.N.A
..2	T0609	AA63-60004K	SPACER-GUM,CRT;-,NTR RUBBER,-,-,-,BLK,T2	S.N.A
..2	T0382	BP61-00495C	HOLDER-CARE;PJT,ACRYL-FOAM,T0.25,W30.0mm	S.N.A
..2	T0175	AA96-02408C	ASSY SPEAKER P;8ohm,SEDA,SEMIDOME,15W,90	S.N.A
...3	SEMIDOME	AA83-00089A	CKD-SPK SEMIDOME;SPK-Semidome,AA96-02408	S.N.A
...3	WIRE	AA83-00090A	CKD-SPK WIRE;SPK-Wire,AA96-02408C	S.N.A
...3	SCREW-SPK	AA83-00091A	CKD-SPK SCREW;SPK-Screw,AA96-02408C	S.N.A
...3	UINT-SPK	AA83-00092A	CKD-SPK UNIT;SPK-Unit,AA96-02408C	S.N.A
...3	E.V.A	AA83-00093A	CKD-SPK E.V.A;SPK-E.V.A,AA96-02408C	S.N.A
...3	CUSHION	AA83-00094A	CKD-SPK CUSHION;SPK Cushion,AA96-02408C	S.N.A
...3	RUBBER	AA83-00095A	CKD-SPK RUBBER;SPK RUBBER,AA96-02408C	S.N.A
...3	LABEL	AA83-00096A	CKD-SPK LABAL;SPK Label,AA96-02408C	S.N.A
..2	T0003	AA96-02491T	ASSY COVER P-FRONT;29Z6(NEW2),SEDA,HIPS	S.N.A
...3	T0081	6003-001019	SCREW-TAPTITE;RH,+,B,M4,L12,ZPC(BLK),SWR	S.N.A
...3	T0069	AA60-00091J	SPACER-FELT;-,FELT,330X10,-,-,BLK,T0.5,-	S.N.A
...3	CIS7	AA61-60003J	SPRING ETC-CS;-,SUS304,-,-,OD6,N7,OD6,-,	S.N.A
...3	T0003	AA64-02744Y	CABINET FRONT;29Z6,(SEDA),NEW,HIPS,HB,G4	
...3	CIS3	AA64-02750A	DECORATION-POWER;29Z6,ABS,HB,GRAY,AL	S.N.A
...3	T0023	AA64-02751A	KNOB-POWER;29Z6,PC,VO,VIOLET	S.N.A
...3	T0061	AA64-02752A	WINDOW-REMOCON;29Z6,PC,VO,VIOLET	S.N.A
...3	T0059	AA64-02753A	INDICATOR LED;29Z6,ACRYL,HB,CLEAR	S.N.A
...3	T0057	AA64-70117B	BADGE-BRAND;,AL,T1.5,10.6,L65,BLK,SILVER	S.N.A
...3		AA65-00011C	CLAMPER CORE-WIRE;ALL MODEL,NYLON 66,V2,	S.N.A
...3		AA65-30105A	CLAMPER CORE-WIRE;ALL MODEL,NYLON 66,V2,	S.N.A
...3	T0382	BP61-00509C	HOLDER-CARE;PJT,ACRYL-FOAM,T0.25,W20.0mm	S.N.A

ASSY CPT

Level	Loc.No.	Code No.	Description;Specification	Remark
1	T0521	AA91-08189T	ASSY CPT;29,SDI MST CPT,0MG,A68QCP693X5	S.N.A
⚠..2	T0063	AA03-00400A	CRT COLOR;A68QCP693X500,0MG,1.1MH,14.9MH	
..2	T0090	AA27-00314A	COIL DEGAUSSING-TILT;TILT,CPTTV,33.5mH,1	
..2	T0089	AA27-00318A	COIL DEGAUSSING;29,TXN2798HFX,10%,50T,4	
..2	T0527	AA61-01373A	HOLDER-D COIL;29K5,NYLON 66	S.N.A
..2		AA98-70011A	ASSY TBC WIRE P;,29,NTSC,PAL,2P,UL1015#2	S.N.A
..2	T0064	AA65-00047A	CLAMPER CORE;D-Coil Clamp,NYLON 6/6,V0,	S.N.A

ASSY CHASSIS

Level	Loc.No.	Code No.	Description;Specification	Remark
1	M0017	AA91-08457A	ASSY CHASSIS;CL29Z6PQUX/XAZ,KS7A,GOLD RU	S.N.A
..2	M0014	AA94-14774A	ASSY PCB MAIN;CL29Z6PQUX/XAZ,KS7A,GOLD R	
...3		0202-001366	SOLDER-WIRE FLUX;-,RS60S,D1.2,63Sn/37Pb,	S.N.A
...3	T0083	0402-001295	DIODE-RECTIFIER;GUR460L-5700,600V,4A,DO-	
...3	T0083	0402-001599	DIODE-RECTIFIER;DGP30L,1500,3A,DO-201AD(	
⚠...3	PC801S	0604-001032	PHOTO-COUPLER;TR,170-260%,300mW,DIP-4,ST	
...3	IC112	1103-001171	IC-EEPROM;24C161,2Kx8,DIP,8P,9.2x6.4mm,2	
...3	T0087	1203-001006	IC-POSI.FIXED REG.;78R05,TO-220F,4P,-,PL	
...3	T0900	1404-001045	THERMISTOR-NTC;4.7ohm,15%,2900K,35.0mW,T	
...3	P803T	1404-001264	THERMISTOR-PTC;4.5OHM,+30/-20%,220V,290V	
...3	C598	2201-000963	C-CERAMIC,DISC;1NF,20%,400V,Y5U,TP,9.5X6	
...3	C598	2201-000987	C-CERAMIC,DISC;2.2NF,20%,400V,Y5U,BK,12.	
⚠...3	CR402S	2301-001041	C-FILM,LEAD-PPF;15nF,5%,1.6KV,TP,29x14x2	
⚠...3	C405S	2301-001338	C-FILM,LEAD-OTHER;0.68NF,5%,1.6KV,BK,28X	
⚠...3	CR406S	2306-000195	C-FILM,LEAD-PPF;360NF,5%,400V,BK,26X19X1	
⚠...3	CX801S	2306-000318	C-FILM,LEAD-PPF;220NF,20%,250V,BK,-,22.5	
...3	C701	2401-003633	C-AL;220uF,20%,160V,GP,BK,22x25mm,10	
...3	LV251	2701-000116	INDUCTOR-AXIAL;10UH,10%,4298	
...3	XV201	2801-004019	CRYSTAL-UNIT;20.25MHz,30ppm,28-AAM,13pF,	
...3	ICV101	2904-001196	FILTER-SAW AV;44MHZ,SIP5K,ST,16.2DB,-,42	
⚠...3	RL801S	3501-001053	RELAY-POWER;5VDC,530MW,10000MA,1FORMA,15	
⚠...3	FP801S	3601-000414	FUSE-CARTRIDGE;250V,5A,SLOW-BLOW,GLASS,5	
...3	CN906	3711-000024	CONNECTOR-HEADER;BOX,3P,1R,2.5mm,STRAIGH	
...3	CN906	3711-002641	CONNECTOR-HEADER;BOX,10P,1R,2.5MM,STRAIG	
...3	CN906	3711-003043	CONNECTOR-HEADER;BOX,4P,1R,2.5MM,STRAIGH	
...3	CN906	3711-003043	CONNECTOR-HEADER;BOX,4P,1R,2.5MM,STRAIGH	
...3	JAR701	3722-001333	JACK-PIN;9P,3.2mm,NI,BLK,-	
...3	DVD_SVHS	3722-001596	JACK-PIN;3P/9P,3.5mm,NI,BLK(GRN/BLU/RED)	
...3	T0616	AA26-00205B	TRANS FBT;FFA61012K,CPTTV,3.4mH,FERRITE,	
⚠...3	T801S	AA26-00217A	TRANS SWITCHING;EER4950,KS7A BASIC,AC90-	
⚠...3	T401	AA26-50001R	TRANS-HORIZ.DRIVE;-,-,-,80MH,-,-,520UH,-	
...3	T0296	AA27-00035A	COIL LINEARITY;-,30UH,DR15X18,0.8MM,19X4	
...3	L405	AA27-00286A	COIL CHOKE;1MH,CPTTV,1MH,10%,0.5OHM,1A,D	
...3	L808	AA27-10002L	COIL CHOKE;-,24uH,K,-,2A,-,24UH-K,10x10m	
⚠...3	LX801S	AA29-00012A	FILTER LINE NOISE;CS29A6PF8X/HAC,-,0.1MA	
⚠...3	TU01S	AA40-00116A	TUNER;TECC1040SL32A(E),TECC1040SL32A(E),	
⚠...3	TU02S	AA40-00122A	TUNER;TMQH2-003A,C-TV TM(SUB),NTSC,181CH	
...3	GT301	AA60-40012D	PIN-GT,ASSY;T1.6,6-12.5-,NYLON66	S.N.A
...3	T0204	AA95-03224R	ASSY SUB PCB-PIP;CT-29K12P,ET,	
....4		0202-001366	SOLDER-WIRE FLUX;-,RS60S,D1.2,63Sn/37Pb,	S.N.A
....4	XP01	2801-004019	CRYSTAL-UNIT;20.25MHz,30ppm,28-AAM,13pF,	
....4	CN906	3711-002706	CONNECTOR-HEADER;NOWALL,8P,1R,2.5mm,ANGL	
....4	CN906	3711-002709	CONNECTOR-HEADER;NOWALL,12P,1R,2.5mm,ANG	
....4	HCP01	AA61-10068A	BRACKET-PCB;M2160,SPTE,T0.3,-,-,-,-	S.N.A
....4		AA97-14426M	ASSY AUTO-PIP;0	S.N.A
.....5	C701	2401-000025	C-AL;100uF,20%,16V,GP,TP,6.3x11,5	
.....5	C701	2401-000025	C-AL;100uF,20%,16V,GP,TP,6.3x11,5	
.....5	C701	2401-000050	C-AL;10uF,20%,16V,GP,TP,5x11,2.5	
.....5	C701	2401-000050	C-AL;10uF,20%,16V,GP,TP,5x11,2.5	
.....5	C701	2401-000050	C-AL;10uF,20%,16V,GP,TP,5x11,2.5	
.....5	C701	2401-000050	C-AL;10uF,20%,16V,GP,TP,5x11,2.5	
.....5	C701	2401-000050	C-AL;10uF,20%,16V,GP,TP,5x11,2.5	
.....5	C701	2401-000603	C-AL;1UF,20%,50V,GP,TP,5X11,2	
.....5	C701	2401-000667	C-AL;2.2uF,20%,50V,WT,TP,5x11,5	
.....5	C701	2401-000667	C-AL;2.2uF,20%,50V,WT,TP,5x11,5	
.....5		AA97-13909S	ASSY SMD-PIP;0,0	S.N.A
⚠.....6	CISS	0401-000133	DIODE-SWITCHING;RLS4148,75V,150MA,LL-34,	
⚠.....6	CISS	0401-000133	DIODE-SWITCHING;RLS4148,75V,150MA,LL-34,	
⚠.....6	CISS	0401-000133	DIODE-SWITCHING;RLS4148,75V,150MA,LL-34,	
⚠.....6	CISS	0401-000133	DIODE-SWITCHING;RLS4148,75V,150MA,LL-34,	
.....6	DZ016	0403-000620	DIODE-ZENER;RLZ5.6B,5.45-5.73V,500MW,LL-	
.....6	DZ016	0403-000620	DIODE-ZENER;RLZ5.6B,5.45-5.73V,500MW,LL-	
.....6	DZ016	0403-001127	DIODE-ZENER;02DZ5.1,4.98-5.2V,200MW,SOD-	
.....6	T0156	0501-000280	TR-SMALL SIGNAL;KSA1182,PNP,150mW,SOT-23	
.....6	T0156	0501-000280	TR-SMALL SIGNAL;KSA1182,PNP,150mW,SOT-23	
.....6	T0156	0501-000280	TR-SMALL SIGNAL;KSA1182,PNP,150mW,SOT-23	
.....6	T0156	0501-000344	TR-SMALL SIGNAL;KSC1623-G,NPN,200mW,SOT-	
.....6	T0156	0501-000344	TR-SMALL SIGNAL;KSC1623-G,NPN,200mW,SOT-	
.....6	T0156	0501-000344	TR-SMALL SIGNAL;KSC1623-G,NPN,200mW,SOT-	
.....6	T0156	0501-000344	TR-SMALL SIGNAL;KSC1623-G,NPN,200mW,SOT-	
.....6	T0087	1203-001359	IC-POSI.FIXED REG.;1086,TO-263,3P,15.8MM	
.....6	ICP01	1204-002100	IC-PICTURE PROCESS;SDA9488X-B31,SOIC,28P	
.....6	RO87	2007-000070	R-CHIP;0ohm,5%,1/10W,TP,1608	
.....6	RO87	2007-000070	R-CHIP;0ohm,5%,1/10W,TP,1608	
.....6	RO87	2007-000070	R-CHIP;0ohm,5%,1/10W,TP,1608	
.....6	RO87	2007-000074	R-CHIP;100ohm,5%,1/10W,TP,1608	
.....6	RO87	2007-000074	R-CHIP;100ohm,5%,1/10W,TP,1608	
.....6	RO87	2007-000074	R-CHIP;100ohm,5%,1/10W,TP,1608	
.....6	RO87	2007-000074	R-CHIP;100ohm,5%,1/10W,TP,1608	
.....6	RO87	2007-000074	R-CHIP;100ohm,5%,1/10W,TP,1608	
.....6	RO87	2007-000078	R-CHIP;1Kohm,5%,1/10W,TP,1608	
.....6	RO87	2007-000078	R-CHIP;1Kohm,5%,1/10W,TP,1608	
.....6	RO87	2007-000078	R-CHIP;1Kohm,5%,1/10W,TP,1608	

Level	Loc.No.	Code No.	Description;Specification	Remark
.....6	RO87	2007-000078	R-CHIP;1Kohm,5%,1/10W,TP,1608	
.....6	RO87	2007-000078	R-CHIP;1Kohm,5%,1/10W,TP,1608	
.....6	RO87	2007-000078	R-CHIP;1Kohm,5%,1/10W,TP,1608	
.....6	RO87	2007-000078	R-CHIP;1Kohm,5%,1/10W,TP,1608	
.....6	RO87	2007-000078	R-CHIP;1Kohm,5%,1/10W,TP,1608	
.....6	RO87	2007-000078	R-CHIP;1Kohm,5%,1/10W,TP,1608	
.....6	RO87	2007-000078	R-CHIP;1Kohm,5%,1/10W,TP,1608	
.....6	RO87	2007-000084	R-CHIP;4.7Kohm,5%,1/10W,TP,1608	
.....6	RO87	2007-000084	R-CHIP;4.7Kohm,5%,1/10W,TP,1608	
.....6	RO87	2007-000084	R-CHIP;4.7Kohm,5%,1/10W,TP,1608	
.....6	RO87	2007-000097	R-CHIP;47Kohm,5%,1/10W,TP,1608	
.....6	RO87	2007-000097	R-CHIP;47Kohm,5%,1/10W,TP,1608	
.....6	RO87	2007-000097	R-CHIP;47Kohm,5%,1/10W,TP,1608	
.....6	RO87	2007-000097	R-CHIP;47Kohm,5%,1/10W,TP,1608	
.....6	RO87	2007-000119	R-CHIP;560ohm,5%,1/10W,TP,1608	
.....6	RO87	2007-000119	R-CHIP;560ohm,5%,1/10W,TP,1608	
.....6	RO87	2007-000119	R-CHIP;560ohm,5%,1/10W,TP,1608	
.....6	RO87	2007-000121	R-CHIP;820ohm,5%,1/10W,TP,1608	
.....6	RO87	2007-002425	R-CHIP;1ohm,5%,1/10W,TP,1608	
.....6	T0657	2203-000181	C-CER,CHIP;100nF,+80-20%,25V,Y5V,TP,2012	
.....6	T0657	2203-000181	C-CER,CHIP;100nF,+80-20%,25V,Y5V,TP,2012	
.....6	T0657	2203-000181	C-CER,CHIP;100nF,+80-20%,25V,Y5V,TP,2012	
.....6	T0657	2203-000257	C-CER,CHIP;10nF,10%,50V,X7R,TP,1608	
.....6	T0657	2203-000257	C-CER,CHIP;10nF,10%,50V,X7R,TP,1608	
.....6	T0657	2203-000257	C-CER,CHIP;10nF,10%,50V,X7R,TP,1608	
.....6	T0657	2203-000257	C-CER,CHIP;10nF,10%,50V,X7R,TP,1608	
.....6	T0657	2203-000257	C-CER,CHIP;10nF,10%,50V,X7R,TP,1608	
.....6	T0657	2203-000257	C-CER,CHIP;10nF,10%,50V,X7R,TP,1608	
.....6	T0657	2203-000257	C-CER,CHIP;10nF,10%,50V,X7R,TP,1608	
.....6	T0657	2203-000257	C-CER,CHIP;10nF,10%,50V,X7R,TP,1608	
.....6	T0657	2203-000384	C-CER,CHIP;0.015NF,5%,50V,C0G,TP,1608	
.....6	T0657	2203-000384	C-CER,CHIP;0.015NF,5%,50V,C0G,TP,1608	
.....6	T0657	2203-005030	C-CER,CHIP;470nF,+80-20%,50V,Y5V,TP,3216	
.....6	T0657	2203-005030	C-CER,CHIP;470nF,+80-20%,50V,Y5V,TP,3216	
.....6	T0052	2703-000392	INDUCTOR-SMD;10uH,5%,4532	
.....6	T0052	2703-000392	INDUCTOR-SMD;10uH,5%,4532	
.....6	PCB	AA41-00466B	PCB-PIP;CS29A6PF8X,CEM-3,2L,A,1.6T,180X2	S.N.A
.....6		0202-001376	SOLDER-CREAM;RX3603-2330HO,S45A,PASTE,Sn	S.N.A
....4	CN906	3711-002642	CONNECTOR-HEADER;BOX,3P,1R,2.5mm,STRAIGH	
....4	T0245	AA39-20033F	LEAD CONNECTOR-ASSY;,3P,300,67096-003,S,	
.....5		AA62-20002A	TUBE-PP;-,GSHS,T0.25,PI4,-,-,-,-,-	S.N.A
⚠...3	D801S	AA96-00276C	ASSY HEAT SINK P;-,BRIDGE ,AA62-00052A,G	S.N.A
....4		0205-001153	GREASE-SILICON;SC102,JAPAN,-	S.N.A
....4	T0083	0402-001399	DIODE-BRIDGE;GSIB660,600V,6A,SIP-4,BK	
....4	T0081	6003-000335	SCREW-TAPTITE;RH,+,2S,M3,L8,ZPC(YEL),SWR	S.N.A
....4		AA60-30003A	WASHER;T1.5,SBHG-1	S.N.A
....4		AA62-00052A	HEAT SINK-PS;-,-,-,SILVER,HOLE 18.5mm, 2	S.N.A
...3	HC801	AA96-00475J	ASSY HEAT SINK P;AA62-00066B,SCREW,FMG-G	S.N.A
....4	H/S	0205-001154	OIL-SILICON;G746,-,-	S.N.A
....4	T0083	0402-001230	DIODE-RECTIFIER;FMG-G2CS,1000V,3A,DO-41,	
....4	T0083	0402-001374	DIODE-RECTIFIER;FFPF06U20S,200V,6A,TO-22	
....4	T0087	1203-001006	IC-POSI.FIXED REG.;78R05,TO-220F,4P,-,PL	
....4	T0087	1203-001543	IC-POSI.FIXED REG.;78R33,TO-220,4P,400MI	
....4	T0081	6003-000334	SCREW-TAPTITE;RH,+,2S,M3,L6,ZPC(YEL),SWR	S.N.A
....4	H/S	AA62-00066B	HEAT SINK;D2,D3,AL ,T1.0,89,70,-,AA62-00	S.N.A
...3	IC301	AA96-00623F	ASSY HEAT SINK P;LA78045,SCREW,AA62-0005	S.N.A
....4	CIS	0205-001154	OIL-SILICON;G746,-,-	S.N.A
....4	T0088	1204-002183	IC-VERTICAL PROCESSO;LA78045,TO220,7P,15	
....4	T0081	6003-000334	SCREW-TAPTITE;RH,+,2S,M3,L6,ZPC(YEL),SWR	S.N.A
....4	CIS	AA62-00056A	HEAT SINK-PS;-,-,T1.0,-,41*35*70,D2,-,-,	S.N.A
...3	Q801	AA96-00624G	ASSY HEAT SINK P;SCREW,AA62-00057B,FQP63	S.N.A
....4	H/S	0205-001154	OIL-SILICON;G746,-,-	S.N.A
....4	Q409	0505-001723	FET-SILICON;FQP630TSTU,N,200V,9A,0.4OHM,	
....4	T0081	6003-000333	SCREW-TAPTITE;RH,+,2S,M3,L10,ZPC(YEL),SW	S.N.A
....4	H/S	AA60-30001A	WASHER-PLATE;M3,ID3.5,15X8.5,T1.0,SBHG	S.N.A
....4	H/S	AA62-00057B	HEAT SINK-PS;CT-29K12P,A1050S,1.0,41,60	S.N.A
...3	Q401	AA96-00624J	ASSY HEAT SINK P;SCREW,AA62-00057A,C5936	S.N.A
....4	H/S	0205-001154	OIL-SILICON;G746,-,-	S.N.A
....4	T0090	0502-001264	TR-POWER;2SC5936,NPN,40000mW,TOP-3E,ST,5	
....4	T0081	6003-000333	SCREW-TAPTITE;RH,+,2S,M3,L10,ZPC(YEL),SW	S.N.A
....4	H/S	AA60-30001A	WASHER-PLATE;M3,ID3.5,15X8.5,T1.0,SBHG	S.N.A
....4	H/S	AA62-00057A	HEAT SINK-PS;-,-,T1.0,-,41*20*60,D2,-,-,	S.N.A
⚠...3	IC801S	AA96-50371K	ASSY HEAT SINK P;AA62-30181H,SCREW,STR-X	S.N.A
....4	CIS	0205-001154	OIL-SILICON;G746,-,-	S.N.A
....4	T0081	6003-000333	SCREW-TAPTITE;RH,+,2S,M3,L10,ZPC(YEL),SW	S.N.A
....4	CIS	AA62-30181H	HEAT SINK-ES;-,AL6063 EXTR.,2,WHT,50MM,-	S.N.A
....4	IC063	AA13-00112A	IC HYBRID;STR-X6750B,CS29M6PF,7,-20 to +	

Level	Loc.No.	Code No.	Description;Specification	Remark
...3		AA97-15529A	ASSY AUTO-MAIN;CL29Z6PQUX/XAZ,KS7A,GOLD	S.N.A
⚠....4	CISS	0401-000005	DIODE-SWITCHING;1N4148,75V,150MA,DO-35,T	
⚠....4	CISS	0401-000005	DIODE-SWITCHING;1N4148,75V,150MA,DO-35,T	
⚠....4	CISS	0401-000005	DIODE-SWITCHING;1N4148,75V,150MA,DO-35,T	
⚠....4	CISS	0401-000005	DIODE-SWITCHING;1N4148,75V,150MA,DO-35,T	
⚠....4	CISS	0401-000005	DIODE-SWITCHING;1N4148,75V,150MA,DO-35,T	
⚠....4	CISS	0401-000005	DIODE-SWITCHING;1N4148,75V,150MA,DO-35,T	
⚠....4	CISS	0401-000005	DIODE-SWITCHING;1N4148,75V,150MA,DO-35,T	
⚠....4	CISS	0401-000005	DIODE-SWITCHING;1N4148,75V,150MA,DO-35,T	
⚠....4	CISS	0401-000005	DIODE-SWITCHING;1N4148,75V,150MA,DO-35,T	
⚠....4	CISS	0401-000006	DIODE-SWITCHING;BAV21,250V,200MA,DO-35,T	
⚠....4	CISS	0401-000006	DIODE-SWITCHING;BAV21,250V,200MA,DO-35,T	
....4	T0083	0402-000132	DIODE-RECTIFIER;1N4004,400V,1A,DO-41,TP	
....4	T0083	0402-000132	DIODE-RECTIFIER;1N4004,400V,1A,DO-41,TP	
....4	T0083	0402-000132	DIODE-RECTIFIER;1N4004,400V,1A,DO-41,TP	
....4	T0083	0402-000132	DIODE-RECTIFIER;1N4004,400V,1A,DO-41,TP	
....4	T0083	0402-000493	DIODE-RECTIFIER;1R5GU41,400V,1.5A,DO-15L	
....4	T0083	0402-000534	DIODE-RECTIFIER;RG10V,400V,1.2A,DO-201,T	
....4	T0083	0402-000537	DIODE-RECTIFIER;RH1A,600V,0.6A,DO-204AC	
....4	T0083	0402-000540	DIODE-RECTIFIER;RU20A,600V,1.5A,-,TP	
....4	T0083	0402-000546	DIODE-RECTIFIER;TVR10G,400V,1.0A,DO-41,T	
....4	T0083	0402-000546	DIODE-RECTIFIER;TVR10G,400V,1.0A,DO-41,T	
....4	T0083	0402-000546	DIODE-RECTIFIER;TVR10G,400V,1.0A,DO-41,T	
....4	T0083	0402-000546	DIODE-RECTIFIER;TVR10G,400V,1.0A,DO-41,T	
....4	DZ016	0403-000508	DIODE-ZENER;MTZJ5.6B,5.45-5.73V,500MW,DO	
....4	DZ016	0403-000508	DIODE-ZENER;MTZJ5.6B,5.45-5.73V,500MW,DO	
....4	DZ016	0403-000508	DIODE-ZENER;MTZJ5.6B,5.45-5.73V,500MW,DO	
....4	DZ016	0403-000700	DIODE-ZENER;TZP33A,5%,1000MW,DO-41,TP	
....4	DZ016	0403-000700	DIODE-ZENER;TZP33A,5%,1000MW,DO-41,TP	
....4	DZ016	0403-000700	DIODE-ZENER;TZP33A,5%,1000MW,DO-41,TP	
....4	DZ016	0403-000714	DIODE-ZENER;MTZJ3.3B,3.32-3.53V,500MW,DO	
....4	DZ016	0403-000720	DIODE-ZENER;MTZJ9.1B,8.57-9.01V,500MW,DO	
....4	DZ016	0403-000720	DIODE-ZENER;MTZJ9.1B,8.57-9.01V,500MW,DO	
....4	DZ016	0403-000720	DIODE-ZENER;MTZJ9.1B,8.57-9.01V,500MW,DO	
....4	DZ016	0403-000720	DIODE-ZENER;MTZJ9.1B,8.57-9.01V,500MW,DO	
....4	DZ016	0403-000720	DIODE-ZENER;MTZJ9.1B,8.57-9.01V,500MW,DO	
....4	DZ016	0403-000720	DIODE-ZENER;MTZJ9.1B,8.57-9.01V,500MW,DO	
....4	DZ016	0403-000720	DIODE-ZENER;MTZJ9.1B,8.57-9.01V,500MW,DO	
....4	DZ016	0403-000734	DIODE-ZENER;TZP15B,14.7-16.5V,1000MW,DO-	
....4	DZ016	0403-001221	DIODE-ZENER;UZ39BSB,35.36-37.19V,500MW,D	
....4	DZ016	0403-001320	DIODE-ZENER;MTZJ6.2C,6.16-6.4V,500MW,DO-	
....4	DZ016	0403-001321	DIODE-ZENER;MTZJ6.8C,6.7-6.97V,500MW,DO-	
....4	DZ016	0403-001329	DIODE-ZENER;MTZJ24B,22.75-23.73V,500MW,D	
....4	DZ016	0403-001329	DIODE-ZENER;MTZJ24B,22.75-23.73V,500MW,D	
....4	DZ016	0403-001329	DIODE-ZENER;MTZJ24B,22.75-23.73V,500MW,D	
....4	T0156	0501-000010	TR-SMALL SIGNAL;KSC1008,NPN,800mW,TO-92,	
....4	T0156	0501-000010	TR-SMALL SIGNAL;KSC1008,NPN,800mW,TO-92,	
....4	T0156	0501-000283	TR-SMALL SIGNAL;KSA539,PNP,400mW,TO-92,T	
....4	T0156	0501-000283	TR-SMALL SIGNAL;KSA539,PNP,400mW,TO-92,T	
....4	T0156	0501-000283	TR-SMALL SIGNAL;KSA539,PNP,400mW,TO-92,T	
....4	T0156	0501-000283	TR-SMALL SIGNAL;KSA539,PNP,400mW,TO-92,T	
....4	T0156	0501-000369	TR-SMALL SIGNAL;KSC2331-Y,NPN,1000mW,TO-	
....4	T0156	0501-000389	TR-SMALL SIGNAL;KSC815,NPN,400mW,TO-92,T	
....4	T0156	0501-000389	TR-SMALL SIGNAL;KSC815,NPN,400mW,TO-92,T	
....4	T0156	0501-000389	TR-SMALL SIGNAL;KSC815,NPN,400mW,TO-92,T	
....4	T0156	0501-000389	TR-SMALL SIGNAL;KSC815,NPN,400mW,TO-92,T	
....4	T0156	0501-000389	TR-SMALL SIGNAL;KSC815,NPN,400mW,TO-92,T	
....4	T0156	0501-000389	TR-SMALL SIGNAL;KSC815,NPN,400mW,TO-92,T	
....4	T0156	0501-000389	TR-SMALL SIGNAL;KSC815,NPN,400mW,TO-92,T	
....4	T0156	0501-000389	TR-SMALL SIGNAL;KSC815,NPN,400mW,TO-92,T	
....4	T0156	0501-000389	TR-SMALL SIGNAL;KSC815,NPN,400mW,TO-92,T	
....4	T0156	0501-000389	TR-SMALL SIGNAL;KSC815,NPN,400mW,TO-92,T	
....4	T0090	0502-001007	TR-POWER;KSC2073-H2,NPN,25W,TO-220,ST,6	
....4	Q409	0505-000109	FET-SILICON;2N7000,N,60V,200mA,5ohm,400m	
....4	Q409	0505-000109	FET-SILICON;2N7000,N,60V,200mA,5ohm,400m	
....4	Q409	0505-000109	FET-SILICON;2N7000,N,60V,200mA,5ohm,400m	
....4	IC012	1203-001217	IC-POSI.ADJUST REG.;431,TO-92,3P,4.58MIL	
....4	IC202	1203-001943	IC-VOL. DETECTOR;7025,TO-92,3P,-,PLASTIC	
....4	T0087	1203-001944	IC-POSI.FIXED REG.;78RM33,TO-220,3P,-,PL	
⚠....4	VP801S	1405-000152	VARISTOR;560V,2500A,14x8.5mm,TP	
⚠....4	VX801S	1405-000152	VARISTOR;560V,2500A,14x8.5mm,TP	
....4	R125	2001-000003	R-CARBON;330ohm,5%,1/8W,AA,TP,1.8x3.2mm	
....4	R125	2001-000003	R-CARBON;330ohm,5%,1/8W,AA,TP,1.8x3.2mm	
....4	R125	2001-000005	R-CARBON;390ohm,5%,1/8W,AA,TP,1.8x3.2mm	
....4	R125	2001-000005	R-CARBON;390ohm,5%,1/8W,AA,TP,1.8x3.2mm	
....4	R125	2001-000006	R-CARBON;2.4KOHM,5%,1/8W,AA,TP,1.8X3.2MM	
....4	R075	2001-000016	R-CARBON(S);1OHM,5%,1/2W,AA,TP,2.4X6.4MM	
....4	R075	2001-000020	R-CARBON(S);22OHM,5%,1/2W,AA,TP,2.4X6.4M	
....4	R075	2001-000037	R-CARBON(S);330OHM,5%,1/2W,AA,TP,2.4X6.4	

Level	Loc.No.	Code No.	Description;Specification	Remark
....4	R075	2001-000052	R-CARBON(S);3.3KOHM,5%,1/2W,AA,TP,2.4X6.	
....4	R075	2001-000052	R-CARBON(S);3.3KOHM,5%,1/2W,AA,TP,2.4X6.	
....4	R125	2001-000221	R-CARBON;1.2KOHM,5%,1/8W,AA,TP,1.8X3.2MM	
....4	R125	2001-000221	R-CARBON;1.2KOHM,5%,1/8W,AA,TP,1.8X3.2MM	
....4	R125	2001-000252	R-CARBON;1.6KOHM,5%,1/8W,AA,TP,1.8X3.2MM	
....4	R125	2001-000273	R-CARBON;100KOHM,5%,1/8W,AA,TP,1.8X3.2MM	
....4	R125	2001-000273	R-CARBON;100KOHM,5%,1/8W,AA,TP,1.8X3.2MM	
....4	R125	2001-000273	R-CARBON;100KOHM,5%,1/8W,AA,TP,1.8X3.2MM	
....4	R125	2001-000273	R-CARBON;100KOHM,5%,1/8W,AA,TP,1.8X3.2MM	
....4	R125	2001-000273	R-CARBON;100KOHM,5%,1/8W,AA,TP,1.8X3.2MM	
....4	R125	2001-000281	R-CARBON;100OHM,5%,1/8W,AA,TP,1.8X3.2MM	
....4	R125	2001-000281	R-CARBON;100OHM,5%,1/8W,AA,TP,1.8X3.2MM	
....4	R125	2001-000281	R-CARBON;100OHM,5%,1/8W,AA,TP,1.8X3.2MM	
....4	R125	2001-000281	R-CARBON;100OHM,5%,1/8W,AA,TP,1.8X3.2MM	
....4	R125	2001-000281	R-CARBON;100OHM,5%,1/8W,AA,TP,1.8X3.2MM	
....4	R125	2001-000281	R-CARBON;100OHM,5%,1/8W,AA,TP,1.8X3.2MM	
....4	R125	2001-000281	R-CARBON;100OHM,5%,1/8W,AA,TP,1.8X3.2MM	
....4	R125	2001-000281	R-CARBON;100OHM,5%,1/8W,AA,TP,1.8X3.2MM	
....4	R125	2001-000281	R-CARBON;100OHM,5%,1/8W,AA,TP,1.8X3.2MM	
....4	R125	2001-000281	R-CARBON;100OHM,5%,1/8W,AA,TP,1.8X3.2MM	
....4	R125	2001-000281	R-CARBON;100OHM,5%,1/8W,AA,TP,1.8X3.2MM	
....4	R125	2001-000281	R-CARBON;100OHM,5%,1/8W,AA,TP,1.8X3.2MM	
....4	R125	2001-000281	R-CARBON;100OHM,5%,1/8W,AA,TP,1.8X3.2MM	
....4	R125	2001-000281	R-CARBON;100OHM,5%,1/8W,AA,TP,1.8X3.2MM	
....4	R125	2001-000281	R-CARBON;100OHM,5%,1/8W,AA,TP,1.8X3.2MM	
....4	R125	2001-000281	R-CARBON;100OHM,5%,1/8W,AA,TP,1.8X3.2MM	
....4	R125	2001-000281	R-CARBON;100OHM,5%,1/8W,AA,TP,1.8X3.2MM	
....4	R125	2001-000281	R-CARBON;100OHM,5%,1/8W,AA,TP,1.8X3.2MM	
....4	R125	2001-000290	R-CARBON;10KOHM,5%,1/8W,AA,TP,1.8X3.2MM	
....4	R125	2001-000290	R-CARBON;10KOHM,5%,1/8W,AA,TP,1.8X3.2MM	
....4	R125	2001-000290	R-CARBON;10KOHM,5%,1/8W,AA,TP,1.8X3.2MM	
....4	R125	2001-000290	R-CARBON;10KOHM,5%,1/8W,AA,TP,1.8X3.2MM	
....4	R125	2001-000290	R-CARBON;10KOHM,5%,1/8W,AA,TP,1.8X3.2MM	
....4	R125	2001-000290	R-CARBON;10KOHM,5%,1/8W,AA,TP,1.8X3.2MM	
....4	R125	2001-000290	R-CARBON;10KOHM,5%,1/8W,AA,TP,1.8X3.2MM	
....4	R125	2001-000290	R-CARBON;10KOHM,5%,1/8W,AA,TP,1.8X3.2MM	
....4	R125	2001-000290	R-CARBON;10KOHM,5%,1/8W,AA,TP,1.8X3.2MM	
....4	R125	2001-000290	R-CARBON;10KOHM,5%,1/8W,AA,TP,1.8X3.2MM	
....4	R125	2001-000331	R-CARBON;12KOHM,5%,1/8W,AA,TP,1.8X3.2MM	
....4	R125	2001-000362	R-CARBON;150OHM,5%,1/8W,AA,TP,1.8X3.2MM	
....4	R125	2001-000362	R-CARBON;150OHM,5%,1/8W,AA,TP,1.8X3.2MM	
....4	R125	2001-000362	R-CARBON;150OHM,5%,1/8W,AA,TP,1.8X3.2MM	
....4	R125	2001-000376	R-CARBON;15OHM,5%,1/8W,AA,TP,1.8X3.2MM	
....4	R125	2001-000429	R-CARBON;1KOHM,5%,1/8W,AA,TP,1.8X3.2MM	
....4	R125	2001-000429	R-CARBON;1KOHM,5%,1/8W,AA,TP,1.8X3.2MM	
....4	R125	2001-000429	R-CARBON;1KOHM,5%,1/8W,AA,TP,1.8X3.2MM	
....4	R125	2001-000429	R-CARBON;1KOHM,5%,1/8W,AA,TP,1.8X3.2MM	
....4	R125	2001-000429	R-CARBON;1KOHM,5%,1/8W,AA,TP,1.8X3.2MM	
....4	R125	2001-000429	R-CARBON;1KOHM,5%,1/8W,AA,TP,1.8X3.2MM	
....4	R125	2001-000429	R-CARBON;1KOHM,5%,1/8W,AA,TP,1.8X3.2MM	
....4	R125	2001-000429	R-CARBON;1KOHM,5%,1/8W,AA,TP,1.8X3.2MM	
....4	R125	2001-000429	R-CARBON;1KOHM,5%,1/8W,AA,TP,1.8X3.2MM	
....4	R125	2001-000449	R-CARBON;2.2KOHM,5%,1/8W,AA,TP,1.8X3.2MM	
....4	R125	2001-000449	R-CARBON;2.2KOHM,5%,1/8W,AA,TP,1.8X3.2MM	
....4	R125	2001-000449	R-CARBON;2.2KOHM,5%,1/8W,AA,TP,1.8X3.2MM	
....4	R125	2001-000522	R-CARBON;22KOHM,5%,1/8W,AA,TP,1.8X3.2MM	
....4	R125	2001-000522	R-CARBON;22KOHM,5%,1/8W,AA,TP,1.8X3.2MM	
....4	R125	2001-000554	R-CARBON;270OHM,5%,1/8W,AA,TP,1.8X3.2MM	
....4	R125	2001-000554	R-CARBON;270OHM,5%,1/8W,AA,TP,1.8X3.2MM	
....4	R125	2001-000554	R-CARBON;270OHM,5%,1/8W,AA,TP,1.8X3.2MM	
....4	R125	2001-000591	R-CARBON;3.3KOHM,5%,1/8W,AA,TP,1.8X3.2MM	
....4	R125	2001-000613	R-CARBON;3.9KOHM,5%,1/8W,AA,TP,1.8X3.2MM	
....4	R125	2001-000660	R-CARBON;33KOHM,5%,1/8W,AA,TP,1.8X3.2MM	
....4	R125	2001-000666	R-CARBON;33OHM,5%,1/8W,AA,TP,1.8X3.2MM	
....4	R125	2001-000666	R-CARBON;33OHM,5%,1/8W,AA,TP,1.8X3.2MM	
....4	R125	2001-000666	R-CARBON;33OHM,5%,1/8W,AA,TP,1.8X3.2MM	
....4	R125	2001-000734	R-CARBON;4.7KOHM,5%,1/8W,AA,TP,1.8X3.2MM	
....4	R125	2001-000734	R-CARBON;4.7KOHM,5%,1/8W,AA,TP,1.8X3.2MM	
....4	R125	2001-000734	R-CARBON;4.7KOHM,5%,1/8W,AA,TP,1.8X3.2MM	
....4	R125	2001-000734	R-CARBON;4.7KOHM,5%,1/8W,AA,TP,1.8X3.2MM	
....4	R125	2001-000734	R-CARBON;4.7KOHM,5%,1/8W,AA,TP,1.8X3.2MM	
....4	R125	2001-000734	R-CARBON;4.7KOHM,5%,1/8W,AA,TP,1.8X3.2MM	
....4	R125	2001-000734	R-CARBON;4.7KOHM,5%,1/8W,AA,TP,1.8X3.2MM	
....4	R125	2001-000734	R-CARBON;4.7KOHM,5%,1/8W,AA,TP,1.8X3.2MM	
....4	R125	2001-000734	R-CARBON;4.7KOHM,5%,1/8W,AA,TP,1.8X3.2MM	
....4	R125	2001-000780	R-CARBON;470OHM,5%,1/8W,AA,TP,1.8X3.2MM	
....4	R125	2001-000832	R-CARBON;510OHM,5%,1/8W,AA,TP,1.8X3.2MM	
....4	R125	2001-000832	R-CARBON;510OHM,5%,1/8W,AA,TP,1.8X3.2MM	
....4	R125	2001-000832	R-CARBON;510OHM,5%,1/8W,AA,TP,1.8X3.2MM	
....4	R125	2001-000832	R-CARBON;510OHM,5%,1/8W,AA,TP,1.8X3.2MM	
....4	R125	2001-000869	R-CARBON;56OHM,5%,1/8W,AA,TP,1.8X3.2MM	
....4	R125	2001-000924	R-CARBON;680OHM,5%,1/8W,AA,TP,1.8X3.2MM	
....4	R125	2001-000924	R-CARBON;680OHM,5%,1/8W,AA,TP,1.8X3.2MM	
....4	R125	2001-000924	R-CARBON;680OHM,5%,1/8W,AA,TP,1.8X3.2MM	
....4	R125	2001-000969	R-CARBON;75OHM,5%,1/8W,AA,TP,1.8X3.2MM	
....4	R125	2001-000969	R-CARBON;75OHM,5%,1/8W,AA,TP,1.8X3.2MM	
....4	R125	2001-000969	R-CARBON;75OHM,5%,1/8W,AA,TP,1.8X3.2MM	
....4	R125	2001-000969	R-CARBON;75OHM,5%,1/8W,AA,TP,1.8X3.2MM	
....4	R125	2001-000969	R-CARBON;75OHM,5%,1/8W,AA,TP,1.8X3.2MM	
....4	R125	2001-000969	R-CARBON;75OHM,5%,1/8W,AA,TP,1.8X3.2MM	
....4	R125	2001-000969	R-CARBON;75OHM,5%,1/8W,AA,TP,1.8X3.2MM	
....4	R125	2001-000977	R-CARBON;8.2KOHM,5%,1/8W,AA,TP,1.8X3.2MM	
....4	R125	2001-000977	R-CARBON;8.2KOHM,5%,1/8W,AA,TP,1.8X3.2MM	
....4	R125	2001-000995	R-CARBON;820OHM,5%,1/8W,AA,TP,1.8X3.2MM	
....4	R075	2001-001040	R-CARBON(S);0.68OHM,5%,1/2W,AA,TP,2.4X6.	
....4	R075	2001-001070	R-CARBON(S);120OHM,5%,1/2W,AA,TP,2.4X6.4	
....4	R075	2001-001071	R-CARBON(S);12KOHM,5%,1/2W,AA,TP,2.4X6.4	
....4	R075	2001-001079	R-CARBON(S);15OHM,5%,1/2W,AA,TP,2.4X6.4M	
....4	R075	2001-001088	R-CARBON(S);1KOHM,5%,1/2W,AA,TP,2.4X6.4M	
....4	R075	2001-001088	R-CARBON(S);1KOHM,5%,1/2W,AA,TP,2.4X6.4M	
....4	R075	2001-001099	R-CARBON(S);2.7KOHM,5%,1/2W,AA,TP,2.4X6.	
....4	R075	2001-001114	R-CARBON(S);270OHM,5%,1/2W,AA,TP,2.4X6.4	
....4	R075	2001-001115	R-CARBON(S);27KOHM,5%,1/2W,AA,TP,2.4X6.4	S.N.A
....4	R075	2001-001115	R-CARBON(S);27KOHM,5%,1/2W,AA,TP,2.4X6.4	S.N.A
....4	R075	2001-001126	R-CARBON(S);300OHM,5%,1/2W,AA,TP,2.4X6.4	
....4	R075	2001-001131	R-CARBON(S);33KOHM,5%,1/2W,AA,TP,2.4X6.4	
....4	R075	2001-001139	R-CARBON(S);39KOHM,5%,1/2W,AA,TP,2.4X6.4	
....4	R075	2001-001150	R-CARBON(S);470KOHM,5%,1/2W,AA,TP,2.4X6.	
....4	R075	2001-001150	R-CARBON(S);470KOHM,5%,1/2W,AA,TP,2.4X6.	
....4	R075	2001-001152	R-CARBON(S);47KOHM,5%,1/2W,AA,TP,2.4X6.4	
....4	R075	2001-001168	R-CARBON(S);6.8KOHM,5%,1/2W,AA,TP,2.4X6.	
....4	R075	2001-001187	R-CARBON(S);75OHM,5%,1/2W,AA,TP,2.4X6.4M	
....4	R0521	2002-001010	R-COMPOSITION;1.8Mohm,5%,1/2W,AA,TP,3.7x	
....4	R0521	2002-001012	R-COMPOSITION;8.2Mohm,5%,1/2W,AA,TP,3.7x	
....4	R426	2003-000540	R-METAL OXIDE(S);1Kohm,5%,2W,AF,TP,4x12m	
....4	R802	2003-000586	R-METAL OXIDE(S);22Kohm,5%,2W,AF,TP,4x12	
....4	R803	2003-000586	R-METAL OXIDE(S);22Kohm,5%,2W,AF,TP,4x12	
....4	R804	2003-000586	R-METAL OXIDE(S);22Kohm,5%,2W,AF,TP,4x12	
....4	R830	2003-000586	R-METAL OXIDE(S);22Kohm,5%,2W,AF,TP,4x12	
....4	R831	2003-000586	R-METAL OXIDE(S);22Kohm,5%,2W,AF,TP,4x12	
....4	R309	2003-001018	R-METAL OXIDE(S);220ohm,5%,2W,AF,TP,3.9x	
....4	R423	2003-001042	R-METAL OXIDE(S);5.6Kohm,5%,2W,AF,TP,3.9	
....4	R835	2003-002020	R-METAL OXIDE(S);56Kohm,5%,2W,AF,TP,3.9x	
....4	R836	2003-002020	R-METAL OXIDE(S);56Kohm,5%,2W,AF,TP,3.9x	
....4	R310	2003-002037	R-METAL OXIDE(S);270ohm,5%,2W,AF,TP,3.9x	
....4	R407	2003-002151	R-METAL OXIDE;18KOHM,5%,2W,AG,TP,6X16MM	
....4	R420	2004-000412	R-METAL;18Kohm,1%,1/4W,AA,TP,2.4x6.4mm	
....4	RV909	2004-000869	R-METAL;3Kohm,1%,1/8W,AA,TP,1.8x3.2mm	
....4	R411	2004-000947	R-METAL;43Kohm,1%,1/4W,AA,TP,2.4x6.4mm	
....4	R024	2004-001382	R-METAL(S);13Kohm,1%,1/2W,AA,TP,2.4x6.4m	
....4	R024	2004-001382	R-METAL(S);13Kohm,1%,1/2W,AA,TP,2.4x6.4m	
....4	R024	2004-001390	R-METAL(S);1Kohm,2%,1/2W,AA,TP,2.4x6.4mm	
....4	R024	2004-001397	R-METAL(S);4.7Kohm,1%,1/2W,AA,TP,2.4x6.4	
....4	R024	2004-001402	R-METAL(S);6.8Kohm,1%,1/2W,AA,TP,2.4x6.4	
....4	R024	2004-001891	R-METAL(S);133Kohm,1%,1/2W,AA,TP,2.5x6.5	
....4	R024	2004-001891	R-METAL(S);133Kohm,1%,1/2W,AA,TP,2.5x6.5	
....4	RV206	2004-001912	R-METAL;15Kohm,2%,1/8W,AA,TP,1.8x3.5mm	
....4	R024	2004-001983	R-METAL(S);2.49Kohm,1%,1/2W,AA,TP,2.4x6.	
....4	RV212	2004-002187	R-METAL;619ohm,1%,1/8W,AA,TP,1.8x3.2mm	
....4	RV214	2004-002187	R-METAL;619ohm,1%,1/8W,AA,TP,1.8x3.2mm	
....4	RV216	2004-002187	R-METAL;619ohm,1%,1/8W,AA,TP,1.8x3.2mm	
....4	R024	2004-004045	R-METAL(S);390ohm,1%,1/2W,AA,TP,2.5x6.5m	
....4	R024	2004-005054	R-METAL(S);39KOHM,1%,1/2W,AA,TP,2.4X6.4M	
....4	R560	2008-000205	R-FUSIBLE(S);10ohm,5%,1/2W,AF,TP,2.5x6.5	
....4	R834	2008-000205	R-FUSIBLE(S);10ohm,5%,1/2W,AF,TP,2.5x6.5	
....4	R809B	2008-000206	R-FUSIBLE(S);1ohm,5%,1/2W,AF,TP,2.5x6.5m	
....4	R829	2008-000252	R-FUSIBLE(S);0.47ohm,10%,1/2W,AF,TP,2.5x	
....4	R413	2008-000253	R-FUSIBLE(S);0.47ohm,5%,1W,AF,TP,3.9x10m	
....4	R414	2008-000264	R-FUSIBLE(S);1ohm,5%,1W,AF,TP,3.9x10mm	
....4	R825	2008-000284	R-FUSIBLE(S);0.1OHM,10%,2W,AF,TP,3.9X10M	
....4	R827	2008-000284	R-FUSIBLE(S);0.1OHM,10%,2W,AF,TP,3.9X10M	
....4	R837	2008-000290	R-FUSIBLE(S);2.4ohm,5%,2W,AF,TP,3.9x10mm	
....4	R303	2008-001013	R-FUSIBLE(S);1.2ohm,5%,2W,AF,TP,3.9x10mm	
....4	R304	2008-001015	R-FUSIBLE(S);1.5ohm,5%,2W,AF,TP,3.9x10mm	
....4	R418	2008-001023	R-FUSIBLE;3.3ohm,5%,1/2W,AF,TP,2.5x6.5mm	

Level	Loc.No.	Code No.	Description;Specification	Remark
....4	R561	2008-001053	R-FUSIBLE;22ohm,5%,1/2W,AF,TP,2.5x6.5mm	
....4	R828	2008-001138	R-FUSIBLE;2.4OHM,5%,1W,AF,TP,3.9X10MM	
⚠....4	FD802S	2008-001163	R-PICO FUSIBLE;10mohm,20%,1W,AA,TP,2.3x6	
....4	R0251	2009-000026	R-METAL PLATE;0.15OHM,10%,5W,CL,TP,5X14X	
....4	R0251	2009-000027	R-METAL PLATE;0.39OHM,10%,5W,CL,TP,5X14X	
....4	R0251	2009-000027	R-METAL PLATE;0.39OHM,10%,5W,CL,TP,5X14X	
....4	C598	2201-000132	C-CERAMIC,DISC;0.1NF,10%,500V,Y5P,TP,6.5	
....4	C598	2201-000192	C-CERAMIC,DISC;0.01NF,0.25PF,500V,C0G,TP	
....4	C598	2201-000291	C-CERAMIC,DISC;1NF,10%,500V,Y5P,TP,7.5X3	
....4	C598	2201-000332	C-CERAMIC,DISC;2.2NF,20%,250V,Y5U,TP,9X4	
....4	C598	2201-000332	C-CERAMIC,DISC;2.2NF,20%,250V,Y5U,TP,9X4	
....4	C598	2201-000374	C-CERAMIC,DISC;0.22NF,5%,50V,C0G,TP,10.5	
....4	C598	2201-000389	C-CERAMIC,DISC;0.022NF,5%,50V,C0G,TP,5X3	
....4	C598	2201-000389	C-CERAMIC,DISC;0.022NF,5%,50V,C0G,TP,5X3	
....4	C598	2201-000406	C-CERAMIC,DISC;0.27NF,10%,2KV,Y5P,TP,6.3	
....4	C598	2201-000556	C-CERAMIC,DISC;0.47NF,10%,500V,Y5P,TP,5.	
....4	C598	2201-000556	C-CERAMIC,DISC;0.47NF,10%,500V,Y5P,TP,5.	
....4	C598	2201-000556	C-CERAMIC,DISC;0.47NF,10%,500V,Y5P,TP,5.	
....4	C598	2201-000556	C-CERAMIC,DISC;0.47NF,10%,500V,Y5P,TP,5.	
....4	C598	2201-000556	C-CERAMIC,DISC;0.47NF,10%,500V,Y5P,TP,5.	
....4	C598	2201-000599	C-CERAMIC,DISC;0.56NF,10%,500V,Y5P,TP,5.	
....4	C598	2201-000599	C-CERAMIC,DISC;0.56NF,10%,500V,Y5P,TP,5.	
....4	C689	2202-000121	C-CERAMIC,MLC-AXIAL;100pF,10%,50V,Y5P,TP	
....4	C689	2202-000121	C-CERAMIC,MLC-AXIAL;100pF,10%,50V,Y5P,TP	
....4	C689	2202-000216	C-CERAMIC,MLC-AXIAL;0.027NF,5%,50V,SL,TP	
....4	C689	2202-000216	C-CERAMIC,MLC-AXIAL;0.027NF,5%,50V,SL,TP	
....4	C689	2202-000231	C-CERAMIC,MLC-AXIAL;0.33NF,10%,50V,Y5P,T	
....4	C689	2202-000231	C-CERAMIC,MLC-AXIAL;0.33NF,10%,50V,Y5P,T	
....4	C689	2202-000231	C-CERAMIC,MLC-AXIAL;0.33NF,10%,50V,Y5P,T	
....4	C689	2202-000231	C-CERAMIC,MLC-AXIAL;0.33NF,10%,50V,Y5P,T	
....4	C689	2202-000231	C-CERAMIC,MLC-AXIAL;0.33NF,10%,50V,Y5P,T	
....4	C689	2202-000231	C-CERAMIC,MLC-AXIAL;0.33NF,10%,50V,Y5P,T	
....4	C689	2202-000231	C-CERAMIC,MLC-AXIAL;0.33NF,10%,50V,Y5P,T	
....4	C689	2202-000231	C-CERAMIC,MLC-AXIAL;0.33NF,10%,50V,Y5P,T	
....4	C689	2202-000231	C-CERAMIC,MLC-AXIAL;0.33NF,10%,50V,Y5P,T	
....4	C689	2202-000231	C-CERAMIC,MLC-AXIAL;0.33NF,10%,50V,Y5P,T	
....4	C689	2202-000231	C-CERAMIC,MLC-AXIAL;0.33NF,10%,50V,Y5P,T	
....4	C689	2202-000243	C-CERAMIC,MLC-AXIAL;33pF,5%,50V,SL,TP,3.	
....4	C689	2202-000243	C-CERAMIC,MLC-AXIAL;33pF,5%,50V,SL,TP,3.	
....4	C689	2202-000243	C-CERAMIC,MLC-AXIAL;33pF,5%,50V,SL,TP,3.	
....4	C689	2202-000796	C-CERAMIC,MLC-AXIAL;1NF,10%,50V,Y5P,TP,3	
....4	C689	2202-000796	C-CERAMIC,MLC-AXIAL;1NF,10%,50V,Y5P,TP,3	
....4	C689	2202-000796	C-CERAMIC,MLC-AXIAL;1NF,10%,50V,Y5P,TP,3	
....4	C689	2202-000796	C-CERAMIC,MLC-AXIAL;1NF,10%,50V,Y5P,TP,3	
....4	C689	2202-000796	C-CERAMIC,MLC-AXIAL;1NF,10%,50V,Y5P,TP,3	
....4	C689	2202-000796	C-CERAMIC,MLC-AXIAL;1NF,10%,50V,Y5P,TP,3	
....4	C689	2202-000796	C-CERAMIC,MLC-AXIAL;1NF,10%,50V,Y5P,TP,3	
....4	C689	2202-000796	C-CERAMIC,MLC-AXIAL;1NF,10%,50V,Y5P,TP,3	
....4	C689	2202-000796	C-CERAMIC,MLC-AXIAL;1NF,10%,50V,Y5P,TP,3	
....4	C689	2202-000796	C-CERAMIC,MLC-AXIAL;1NF,10%,50V,Y5P,TP,3	
....4	C689	2202-000796	C-CERAMIC,MLC-AXIAL;1NF,10%,50V,Y5P,TP,3	
....4	C689	2202-000796	C-CERAMIC,MLC-AXIAL;1NF,10%,50V,Y5P,TP,3	
....4	C689	2202-000796	C-CERAMIC,MLC-AXIAL;1NF,10%,50V,Y5P,TP,3	
....4	C689	2202-000796	C-CERAMIC,MLC-AXIAL;1NF,10%,50V,Y5P,TP,3	
....4	C689	2202-000796	C-CERAMIC,MLC-AXIAL;1NF,10%,50V,Y5P,TP,3	
....4	C689	2202-000806	C-CERAMIC,MLC-AXIAL;220pF,10%,50V,Y5P,TP	
....4	C689	2202-000806	C-CERAMIC,MLC-AXIAL;220pF,10%,50V,Y5P,TP	
....4	C689	2202-000806	C-CERAMIC,MLC-AXIAL;220pF,10%,50V,Y5P,TP	
....4	C689	2202-000863	C-CERAMIC,MLC-AXIAL;560pF,10%,50V,Y5P,TP	
....4	C689	2202-002009	C-CERAMIC,MLC-AXIAL;100NF,+80-20%,50V,Y5	
....4	C689	2202-002037	C-CERAMIC,MLC-AXIAL;100nF,80-20%,50V,Y5V	
....4	C689	2202-002037	C-CERAMIC,MLC-AXIAL;100nF,80-20%,50V,Y5V	
....4	C689	2202-002037	C-CERAMIC,MLC-AXIAL;100nF,80-20%,50V,Y5V	
....4	C689	2202-002037	C-CERAMIC,MLC-AXIAL;100nF,80-20%,50V,Y5V	
....4	C2560	2301-000192	C-FILM,LEAD-PEF;1nF,5%,50V,TP,5.3x10mm,5	
....4	C2560	2301-000224	C-FILM,LEAD-PEF;22nF,5%,50V,TP,7.4x3.9x1	
....4	C2560	2301-000224	C-FILM,LEAD-PEF;22nF,5%,50V,TP,7.4x3.9x1	
....4	C2560	2301-000224	C-FILM,LEAD-PEF;22nF,5%,50V,TP,7.4x3.9x1	
....4	C2560	2301-000342	C-FILM,LEAD-PEF;2.2nF,5%,50V,TP,7.4x3.9x	
....4	C2560	2301-000356	C-FILM,LEAD-PEF;47nF,5%,50V,TP,7.5x4.0x6	
....4	C2560	2301-000383	C-FILM,LEAD-PEF;10nF,5%,50V,TP,6x7x3.2mm	
....4	C2560	2301-000383	C-FILM,LEAD-PEF;10nF,5%,50V,TP,6x7x3.2mm	
....4	C2560	2301-000383	C-FILM,LEAD-PEF;10nF,5%,50V,TP,6x7x3.2mm	
....4	C2560	2301-000383	C-FILM,LEAD-PEF;10nF,5%,50V,TP,6x7x3.2mm	
....4	C807	2301-001342	C-FILM,LEAD-PPF;1.5nF,5%,800V,TP,15x6.5x	
⚠....4	CR404S	2303-001001	C-FILM,LEAD-PPF;22nF,5%,630V,TP,18x14.5x	
....4	C2560	2305-000237	C-FILM,LEAD-PEF;1uF,5%,63V,TP,7.5x15.5mm	
....4	C2560	2305-000285	C-FILM,LEAD-PEF;220NF,5%,100V,TP,10.5X5.	
....4	C2560	2305-000289	C-FILM,LEAD-PEF;220nF,5%,63V,TP,-,5mm	

Level	Loc.No.	Code No.	Description;Specification	Remark
....4	C2560	2305-000289	C-FILM,LEAD-PEF;220nF,5%,63V,TP,-,5mm	
....4	C2560	2305-000382	C-FILM,LEAD-PEF;4.7nF,5%,400V,TP,-,5mm	
....4	C2560	2305-000411	C-FILM,LEAD-PEF;470nF,5%,50V,TP,7.3x4.8x	
....4	C2560	2305-000411	C-FILM,LEAD-PEF;470nF,5%,50V,TP,7.3x4.8x	
....4	C2560	2305-000411	C-FILM,LEAD-PEF;470nF,5%,50V,TP,7.3x4.8x	
....4	C2560	2305-000411	C-FILM,LEAD-PEF;470nF,5%,50V,TP,7.3x4.8x	
....4	C2560	2305-000412	C-FILM,LEAD-PEF;470nF,5%,63V,TP,-,5mm	
....4	C2560	2305-000412	C-FILM,LEAD-PEF;470nF,5%,63V,TP,-,5mm	
....4	C2560	2305-000665	C-FILM,LEAD-PEF;100nF,5%,63V,TP,7.5x4.0x	
....4	C2560	2305-000665	C-FILM,LEAD-PEF;100nF,5%,63V,TP,7.5x4.0x	
....4	C2560	2305-000665	C-FILM,LEAD-PEF;100nF,5%,63V,TP,7.5x4.0x	
....4	C2560	2305-000665	C-FILM,LEAD-PEF;100nF,5%,63V,TP,7.5x4.0x	
....4	C2560	2305-000665	C-FILM,LEAD-PEF;100nF,5%,63V,TP,7.5x4.0x	
....4	C2560	2305-000665	C-FILM,LEAD-PEF;100nF,5%,63V,TP,7.5x4.0x	
....4	C2560	2305-000665	C-FILM,LEAD-PEF;100nF,5%,63V,TP,7.5x4.0x	
....4	C2560	2305-000665	C-FILM,LEAD-PEF;100nF,5%,63V,TP,7.5x4.0x	
....4	C2560	2305-000665	C-FILM,LEAD-PEF;100nF,5%,63V,TP,7.5x4.0x	
....4	C2560	2305-000665	C-FILM,LEAD-PEF;100nF,5%,63V,TP,7.5x4.0x	
....4	C2560	2305-001037	C-FILM,LEAD-PEF;330nF,5%,63V,TP,7.5x5.5x	
....4	C2560	2305-001037	C-FILM,LEAD-PEF;330nF,5%,63V,TP,7.5x5.5x	
....4	C112	2306-000122	C-FILM,LEAD-PPF;100nF,5%,50V,TP,7.3x4.0x	
....4	CV101	2306-000122	C-FILM,LEAD-PPF;100nF,5%,50V,TP,7.3x4.0x	
....4	C701	2401-000025	C-AL;100uF,20%,16V,GP,TP,6.3x11,5	
....4	C701	2401-000302	C-AL;100uF,20%,25V,GP,TP,6.3x11,5	
....4	C701	2401-000360	C-AL;100uF,20%,50V,GP,TP,8x11.5,5	
....4	C701	2401-000365	C-AL;100uF,20%,50V,WT,TP,10x12.5mm,	
....4	C701	2401-000493	C-AL;10uF,20%,50V,LZ,TP,5x11mm,5mm	
....4	C701	2401-000493	C-AL;10uF,20%,50V,LZ,TP,5x11mm,5mm	
....4	C701	2401-000603	C-AL;1UF,20%,50V,GP,TP,5X11,2	
....4	C701	2401-000603	C-AL;1UF,20%,50V,GP,TP,5X11,2	
....4	C701	2401-000832	C-AL;220uF,20%,25V,GP,TP,8x11.5,5	
....4	C701	2401-000832	C-AL;220uF,20%,25V,GP,TP,8x11.5,5	
....4	C701	2401-001026	C-AL;3.3UF,20%,50V,GP,TP,5X11,5	
....4	C701	2401-001397	C-AL;470uF,20%,25V,GP,TP,10x16,5	
....4	C701	2401-001513	C-AL;47uF,20%,16V,WT,TP,5x11,5	
....4	C701	2401-001527	C-AL;47uF,20%,250V,HR,TP,13x25mm,5m	
....4	C701	2401-001914	C-AL;1uF,20%,50V,BP,TP,5x11,5	
....4	C701	2401-001914	C-AL;1uF,20%,50V,BP,TP,5x11,5	
....4	C701	2401-001989	C-AL;4.7uF,20%,50V,BP,TP,5x11,5	
....4	C701	2401-001989	C-AL;4.7uF,20%,50V,BP,TP,5x11,5	
....4	C701	2401-001989	C-AL;4.7uF,20%,50V,BP,TP,5x11,5	
....4	C701	2401-001989	C-AL;4.7uF,20%,50V,BP,TP,5x11,5	
....4	C701	2401-001989	C-AL;4.7uF,20%,50V,BP,TP,5x11,5	
....4	C701	2401-001989	C-AL;4.7uF,20%,50V,BP,TP,5x11,5	
....4	C701	2401-001998	C-AL;1000uF,20%,25V,GP,TP,10x20,5mm	
....4	C701	2401-002075	C-AL;4.7uF,20%,50V,GP,TP,5x11,5	
....4	C701	2401-002075	C-AL;4.7uF,20%,50V,GP,TP,5x11,5	
....4	C701	2401-002075	C-AL;4.7uF,20%,50V,GP,TP,5x11,5	
....4	C701	2401-002144	C-AL;47uF,20%,16V,GP,TP,5x11,5	
....4	C701	2401-002144	C-AL;47uF,20%,16V,GP,TP,5x11,5	
....4	C701	2401-002215	C-AL;2200uF,20%,25V,WT,TP,13x25,5	
....4	C701	2401-002215	C-AL;2200uF,20%,25V,WT,TP,13x25,5	
....4	C701	2401-002215	C-AL;2200uF,20%,25V,WT,TP,13x25,5	
....4	C701	2401-002268	C-AL;2.2uF,20%,250V,LZ,TP,8X11,5	
....4	C701	2401-002288	C-AL;470uF,20%,25V,WT,TP,10x20,5	
....4	C701	2401-002463	C-AL;470uF,20%,16V,GP,TP,8x11.5,5	
....4	C701	2401-002594	C-AL;220uF,20%,16V,GP,TP,8x11.5,5	
....4	C701	2401-002597	C-AL;220uF,20%,35V,GP,TP,10x12.5,5	
....4	C701	2401-002619	C-AL;47uF,20%,25V,GP,TP,5x11,5	
....4	C701	2401-002619	C-AL;47uF,20%,25V,GP,TP,5x11,5	
....4	C701	2401-002619	C-AL;47uF,20%,25V,GP,TP,5x11,5	
....4	C701	2401-002619	C-AL;47uF,20%,25V,GP,TP,5x11,5	
....4	C701	2401-002619	C-AL;47uF,20%,25V,GP,TP,5x11,5	
....4	C701	2401-002619	C-AL;47uF,20%,25V,GP,TP,5x11,5	
....4	C701	2401-002619	C-AL;47uF,20%,25V,GP,TP,5x11,5	
....4	C701	2401-002619	C-AL;47uF,20%,25V,GP,TP,5x11,5	
....4	C701	2401-002619	C-AL;47uF,20%,25V,GP,TP,5x11,5	
....4	C701	2401-002619	C-AL;47uF,20%,25V,GP,TP,5x11,5	
....4	C701	2401-002619	C-AL;47uF,20%,25V,GP,TP,5x11,5	
....4	C701	2401-003553	C-AL;100uF,20%,200V,LZ,TP,16x25,7.5	
....4	C701	2401-003578	C-AL;1000uF,20%,10V,GP,TP,8x20mm,5	
....4	C701	2401-003578	C-AL;1000uF,20%,10V,GP,TP,8x20mm,5	
....4	L106	2701-000114	INDUCTOR-AXIAL;10UH,10%,2534	
....4	LV101	2701-000114	INDUCTOR-AXIAL;10UH,10%,2534	
....4	LV252A	2701-000114	INDUCTOR-AXIAL;10UH,10%,2534	
....4	LV252B	2701-000114	INDUCTOR-AXIAL;10UH,10%,2534	
....4	RV101	2701-000114	INDUCTOR-AXIAL;10UH,10%,2534	

Level	Loc.No.	Code No.	Description;Specification	Remark
....4	RV102	2701-000114	INDUCTOR-AXIAL;10UH,10%,2534	
....4	LV204	2701-000115	INDUCTOR-AXIAL;10UH,10%,3070	
....4	LV601	2701-000115	INDUCTOR-AXIAL;10UH,10%,3070	
....4	L284	2701-000116	INDUCTOR-AXIAL;10UH,10%,4298	
....4	LV904	2701-000116	INDUCTOR-AXIAL;10UH,10%,4298	
....4	L424	2701-000142	INDUCTOR-AXIAL;1UH,10%,2534	
....4	L825	2701-000142	INDUCTOR-AXIAL;1UH,10%,2534	
....4	LV701	2701-000142	INDUCTOR-AXIAL;1UH,10%,2534	
....4	LV702	2701-000142	INDUCTOR-AXIAL;1UH,10%,2534	
....4	LV703	2701-000142	INDUCTOR-AXIAL;1UH,10%,2534	
....4	LV201	2701-000143	INDUCTOR-AXIAL;1UH,10%,3070	
....4	LV202	2701-000143	INDUCTOR-AXIAL;1UH,10%,3070	
....4	LV203	2701-000143	INDUCTOR-AXIAL;1UH,10%,3070	
....4	LV901	2701-000143	INDUCTOR-AXIAL;1UH,10%,3070	
....4	LV905	2701-000158	INDUCTOR-AXIAL;22UH,10%,2534	
....4	LV205	2701-000159	INDUCTOR-AXIAL;22UH,10%,4298	
....4	L607	2701-000177	INDUCTOR-AXIAL;33UH,10%,2534	
....4	L608	2701-000177	INDUCTOR-AXIAL;33UH,10%,2534	
....4	L705	2701-000177	INDUCTOR-AXIAL;33UH,10%,2534	
....4	L706	2701-000177	INDUCTOR-AXIAL;33UH,10%,2534	
....4	LV206	2701-000184	INDUCTOR-AXIAL;4.7UH,10%,2534	
....4	LV102	2701-000189	INDUCTOR-AXIAL;0.47UH,10%,2534	
....4	L303B	2701-001040	INDUCTOR-AXIAL;10UH,10%,4514	
....4	LV253	2702-001094	INDUCTOR-RADIAL;10uH,10%,4x6mm	
....4	F101	2901-000297	FILTER-EMI ON BOARD;-,3A,-,-,3.5x5,TP,-	
....4	F101	2901-000297	FILTER-EMI ON BOARD;-,3A,-,-,3.5x5,TP,-	
....4	L2514	3301-000287	BEAD-AXIAL;,3.5x1.0x6.0mm,3000mA,TP,,,50	
....4	L2514	3301-000287	BEAD-AXIAL;,3.5x1.0x6.0mm,3000mA,TP,,,50	
....4	L2514	3301-000287	BEAD-AXIAL;,3.5x1.0x6.0mm,3000mA,TP,,,50	
....4	L2514	3301-000287	BEAD-AXIAL;,3.5x1.0x6.0mm,3000mA,TP,,,50	
....4	L2514	3301-000287	BEAD-AXIAL;,3.5x1.0x6.0mm,3000mA,TP,,,50	
....4	L2514	3301-000287	BEAD-AXIAL;,3.5x1.0x6.0mm,3000mA,TP,,,50	
....4	L2514	3301-000287	BEAD-AXIAL;,3.5x1.0x6.0mm,3000mA,TP,,,50	
....4	L2514	3301-000287	BEAD-AXIAL;,3.5x1.0x6.0mm,3000mA,TP,,,50	
....4	L2514	3301-000287	BEAD-AXIAL;,3.5x1.0x6.0mm,3000mA,TP,,,50	
....4	L2514	3301-000287	BEAD-AXIAL;,3.5x1.0x6.0mm,3000mA,TP,,,50	
....4	L2514	3301-000287	BEAD-AXIAL;,3.5x1.0x6.0mm,3000mA,TP,,,50	
....4	L2514	3301-000287	BEAD-AXIAL;,3.5x1.0x6.0mm,3000mA,TP,,,50	
....4	FD801A	3601-001228	FUSE-AXIAL LEAD;125V,10A,FAST-ACTING,EPO	
....4	F801A	3602-000114	FUSE-HOLDER;-,-,30mohm	
....4	F801B	3602-000114	FUSE-HOLDER;-,-,30mohm	
....4	CN906	3711-002642	CONNECTOR-HEADER;BOX,3P,1R,2.5mm,STRAIGH	
....4	CN906	3711-002646	CONNECTOR-HEADER;BOX,7P,1R,2.5mm,STRAIGH	
....4	CN906	3711-002646	CONNECTOR-HEADER;BOX,7P,1R,2.5mm,STRAIGH	
....4	CN906	3711-002647	CONNECTOR-HEADER;BOX,8P,1R,2.5mm,STRAIGH	
....4	EL800	6042-000001	EYELET;ID2.2,OD2.7,L3.1,NI+SN,BSP3-1/2H	S.N.A
....4	EL801	6042-000001	EYELET;ID2.2,OD2.7,L3.1,NI+SN,BSP3-1/2H	S.N.A
....4	EL802	6042-000001	EYELET;ID2.2,OD2.7,L3.1,NI+SN,BSP3-1/2H	S.N.A
....4	EL803	6042-000001	EYELET;ID2.2,OD2.7,L3.1,NI+SN,BSP3-1/2H	S.N.A
....4	EL804	6042-000001	EYELET;ID2.2,OD2.7,L3.1,NI+SN,BSP3-1/2H	S.N.A
....4	EL805	6042-000001	EYELET;ID2.2,OD2.7,L3.1,NI+SN,BSP3-1/2H	S.N.A
....4	EL806	6042-000001	EYELET;ID2.2,OD2.7,L3.1,NI+SN,BSP3-1/2H	S.N.A
....4	EL807	6042-000001	EYELET;ID2.2,OD2.7,L3.1,NI+SN,BSP3-1/2H	S.N.A
....4	EL808	6042-000001	EYELET;ID2.2,OD2.7,L3.1,NI+SN,BSP3-1/2H	S.N.A
....4	EL809	6042-000001	EYELET;ID2.2,OD2.7,L3.1,NI+SN,BSP3-1/2H	S.N.A
....4	EL811	6042-000001	EYELET;ID2.2,OD2.7,L3.1,NI+SN,BSP3-1/2H	S.N.A
....4	EL812	6042-000001	EYELET;ID2.2,OD2.7,L3.1,NI+SN,BSP3-1/2H	S.N.A
....4	EL842	6042-000001	EYELET;ID2.2,OD2.7,L3.1,NI+SN,BSP3-1/2H	S.N.A
....4	EL857	6042-000001	EYELET;ID2.2,OD2.7,L3.1,NI+SN,BSP3-1/2H	S.N.A
....4	EL868	6042-000001	EYELET;ID2.2,OD2.7,L3.1,NI+SN,BSP3-1/2H	S.N.A
....4	EY600	6042-000002	EYELET;ID1.5,OD2,L2.8,NI+SN,BSP3-1/2H	S.N.A
....4	EY601	6042-000002	EYELET;ID1.5,OD2,L2.8,NI+SN,BSP3-1/2H	S.N.A
....4	EY602	6042-000002	EYELET;ID1.5,OD2,L2.8,NI+SN,BSP3-1/2H	S.N.A
....4	EY603	6042-000002	EYELET;ID1.5,OD2,L2.8,NI+SN,BSP3-1/2H	S.N.A
....4	EY800	6042-000002	EYELET;ID1.5,OD2,L2.8,NI+SN,BSP3-1/2H	S.N.A
....4	EY801	6042-000002	EYELET;ID1.5,OD2,L2.8,NI+SN,BSP3-1/2H	S.N.A
....4	EY802	6042-000002	EYELET;ID1.5,OD2,L2.8,NI+SN,BSP3-1/2H	S.N.A
....4	EY803	6042-000002	EYELET;ID1.5,OD2,L2.8,NI+SN,BSP3-1/2H	S.N.A
....4	EY804	6042-000002	EYELET;ID1.5,OD2,L2.8,NI+SN,BSP3-1/2H	S.N.A
....4	EY805	6042-000002	EYELET;ID1.5,OD2,L2.8,NI+SN,BSP3-1/2H	S.N.A
....4	EY806	6042-000002	EYELET;ID1.5,OD2,L2.8,NI+SN,BSP3-1/2H	S.N.A
....4	EY807	6042-000002	EYELET;ID1.5,OD2,L2.8,NI+SN,BSP3-1/2H	S.N.A
....4	EY808	6042-000002	EYELET;ID1.5,OD2,L2.8,NI+SN,BSP3-1/2H	S.N.A
....4	EY809	6042-000002	EYELET;ID1.5,OD2,L2.8,NI+SN,BSP3-1/2H	S.N.A
....4	EY810	6042-000002	EYELET;ID1.5,OD2,L2.8,NI+SN,BSP3-1/2H	S.N.A
....4	EY811	6042-000002	EYELET;ID1.5,OD2,L2.8,NI+SN,BSP3-1/2H	S.N.A
....4	EY812	6042-000002	EYELET;ID1.5,OD2,L2.8,NI+SN,BSP3-1/2H	S.N.A
....4	EY813	6042-000002	EYELET;ID1.5,OD2,L2.8,NI+SN,BSP3-1/2H	S.N.A

Level	Loc.No.	Code No.	Description;Specification	Remark
....4	EY814	6042-000002	EYELET;ID1.5,OD2,L2.8,NI+SN,BSP3-1/2H	S.N.A
....4	EY815	6042-000002	EYELET;ID1.5,OD2,L2.8,NI+SN,BSP3-1/2H	S.N.A
....4	EY816	6042-000002	EYELET;ID1.5,OD2,L2.8,NI+SN,BSP3-1/2H	S.N.A
....4	EY817	6042-000002	EYELET;ID1.5,OD2,L2.8,NI+SN,BSP3-1/2H	S.N.A
....4	EY818	6042-000002	EYELET;ID1.5,OD2,L2.8,NI+SN,BSP3-1/2H	S.N.A
....4	EY819	6042-000002	EYELET;ID1.5,OD2,L2.8,NI+SN,BSP3-1/2H	S.N.A
....4	EY821	6042-000002	EYELET;ID1.5,OD2,L2.8,NI+SN,BSP3-1/2H	S.N.A
....4	EY822	6042-000002	EYELET;ID1.5,OD2,L2.8,NI+SN,BSP3-1/2H	S.N.A
....4	EY823	6042-000002	EYELET;ID1.5,OD2,L2.8,NI+SN,BSP3-1/2H	S.N.A
....4	EY824	6042-000002	EYELET;ID1.5,OD2,L2.8,NI+SN,BSP3-1/2H	S.N.A
....4	EY826	6042-000002	EYELET;ID1.5,OD2,L2.8,NI+SN,BSP3-1/2H	S.N.A
....4	EY827	6042-000002	EYELET;ID1.5,OD2,L2.8,NI+SN,BSP3-1/2H	S.N.A
....4	EY828	6042-000002	EYELET;ID1.5,OD2,L2.8,NI+SN,BSP3-1/2H	S.N.A
....4	EY829	6042-000002	EYELET;ID1.5,OD2,L2.8,NI+SN,BSP3-1/2H	S.N.A
....4	EY830	6042-000002	EYELET;ID1.5,OD2,L2.8,NI+SN,BSP3-1/2H	S.N.A
....4	EY831	6042-000002	EYELET;ID1.5,OD2,L2.8,NI+SN,BSP3-1/2H	S.N.A
....4	EY832	6042-000002	EYELET;ID1.5,OD2,L2.8,NI+SN,BSP3-1/2H	S.N.A
....4	EY833	6042-000002	EYELET;ID1.5,OD2,L2.8,NI+SN,BSP3-1/2H	S.N.A
....4	EY834	6042-000002	EYELET;ID1.5,OD2,L2.8,NI+SN,BSP3-1/2H	S.N.A
....4	EY835	6042-000002	EYELET;ID1.5,OD2,L2.8,NI+SN,BSP3-1/2H	S.N.A
....4	EY836	6042-000002	EYELET;ID1.5,OD2,L2.8,NI+SN,BSP3-1/2H	S.N.A
....4	EY837	6042-000002	EYELET;ID1.5,OD2,L2.8,NI+SN,BSP3-1/2H	S.N.A
....4	EY838	6042-000002	EYELET;ID1.5,OD2,L2.8,NI+SN,BSP3-1/2H	S.N.A
....4	EY839	6042-000002	EYELET;ID1.5,OD2,L2.8,NI+SN,BSP3-1/2H	S.N.A
....4	EY840	6042-000002	EYELET;ID1.5,OD2,L2.8,NI+SN,BSP3-1/2H	S.N.A
....4	EY841	6042-000002	EYELET;ID1.5,OD2,L2.8,NI+SN,BSP3-1/2H	S.N.A
....4	EY842	6042-000002	EYELET;ID1.5,OD2,L2.8,NI+SN,BSP3-1/2H	S.N.A
....4	EY843	6042-000002	EYELET;ID1.5,OD2,L2.8,NI+SN,BSP3-1/2H	S.N.A
....4	EY844	6042-000002	EYELET;ID1.5,OD2,L2.8,NI+SN,BSP3-1/2H	S.N.A
....4	EY845	6042-000002	EYELET;ID1.5,OD2,L2.8,NI+SN,BSP3-1/2H	S.N.A
....4	EY846	6042-000002	EYELET;ID1.5,OD2,L2.8,NI+SN,BSP3-1/2H	S.N.A
....4	EY847	6042-000002	EYELET;ID1.5,OD2,L2.8,NI+SN,BSP3-1/2H	S.N.A
....4	EY848	6042-000002	EYELET;ID1.5,OD2,L2.8,NI+SN,BSP3-1/2H	S.N.A
....4	EY849	6042-000002	EYELET;ID1.5,OD2,L2.8,NI+SN,BSP3-1/2H	S.N.A
....4	EY850	6042-000002	EYELET;ID1.5,OD2,L2.8,NI+SN,BSP3-1/2H	S.N.A
....4	EY851	6042-000002	EYELET;ID1.5,OD2,L2.8,NI+SN,BSP3-1/2H	S.N.A
....4	EY852	6042-000002	EYELET;ID1.5,OD2,L2.8,NI+SN,BSP3-1/2H	S.N.A
....4	EY853	6042-000002	EYELET;ID1.5,OD2,L2.8,NI+SN,BSP3-1/2H	S.N.A
....4	EY854	6042-000002	EYELET;ID1.5,OD2,L2.8,NI+SN,BSP3-1/2H	S.N.A
....4	EY855	6042-000002	EYELET;ID1.5,OD2,L2.8,NI+SN,BSP3-1/2H	S.N.A
....4	EY856	6042-000002	EYELET;ID1.5,OD2,L2.8,NI+SN,BSP3-1/2H	S.N.A
....4	EY857	6042-000002	EYELET;ID1.5,OD2,L2.8,NI+SN,BSP3-1/2H	S.N.A
....4	EY858	6042-000002	EYELET;ID1.5,OD2,L2.8,NI+SN,BSP3-1/2H	S.N.A
....4	EY859	6042-000002	EYELET;ID1.5,OD2,L2.8,NI+SN,BSP3-1/2H	S.N.A
....4	EY862	6042-000002	EYELET;ID1.5,OD2,L2.8,NI+SN,BSP3-1/2H	S.N.A
....4	EY863	6042-000002	EYELET;ID1.5,OD2,L2.8,NI+SN,BSP3-1/2H	S.N.A
....4	EY864	6042-000002	EYELET;ID1.5,OD2,L2.8,NI+SN,BSP3-1/2H	S.N.A
....4	EY865	6042-000002	EYELET;ID1.5,OD2,L2.8,NI+SN,BSP3-1/2H	S.N.A
....4	EY866	6042-000002	EYELET;ID1.5,OD2,L2.8,NI+SN,BSP3-1/2H	S.N.A
....4	EY867	6042-000002	EYELET;ID1.5,OD2,L2.8,NI+SN,BSP3-1/2H	S.N.A
....4	EY869	6042-000002	EYELET;ID1.5,OD2,L2.8,NI+SN,BSP3-1/2H	S.N.A
....4	EY870	6042-000002	EYELET;ID1.5,OD2,L2.8,NI+SN,BSP3-1/2H	S.N.A
....4	EY871	6042-000002	EYELET;ID1.5,OD2,L2.8,NI+SN,BSP3-1/2H	S.N.A
....4	EY872	6042-000002	EYELET;ID1.5,OD2,L2.8,NI+SN,BSP3-1/2H	S.N.A
....4	EY873	6042-000002	EYELET;ID1.5,OD2,L2.8,NI+SN,BSP3-1/2H	S.N.A
....4	EY874	6042-000002	EYELET;ID1.5,OD2,L2.8,NI+SN,BSP3-1/2H	S.N.A
....4	EY875	6042-000002	EYELET;ID1.5,OD2,L2.8,NI+SN,BSP3-1/2H	S.N.A
....4	EY876	6042-000002	EYELET;ID1.5,OD2,L2.8,NI+SN,BSP3-1/2H	S.N.A
....4	EY877	6042-000002	EYELET;ID1.5,OD2,L2.8,NI+SN,BSP3-1/2H	S.N.A
....4	EY878	6042-000002	EYELET;ID1.5,OD2,L2.8,NI+SN,BSP3-1/2H	S.N.A
....4	EY879	6042-000002	EYELET;ID1.5,OD2,L2.8,NI+SN,BSP3-1/2H	S.N.A
....4	EY880	6042-000002	EYELET;ID1.5,OD2,L2.8,NI+SN,BSP3-1/2H	S.N.A
....4	EY881	6042-000002	EYELET;ID1.5,OD2,L2.8,NI+SN,BSP3-1/2H	S.N.A
....4	EY882	6042-000002	EYELET;ID1.5,OD2,L2.8,NI+SN,BSP3-1/2H	S.N.A
....4	EY883	6042-000002	EYELET;ID1.5,OD2,L2.8,NI+SN,BSP3-1/2H	S.N.A
....4	FT401	AA37-00001A	CONNECTOR-FBT FIX PIN;JM-3500,CPTTV,0.36	
....4	FT402	AA37-00001A	CONNECTOR-FBT FIX PIN;JM-3500,CPTTV,0.36	
....4	GT404	AA60-40014A	PIN-GT,ASSY;AUTO	S.N.A
....4	GT406	AA60-40014A	PIN-GT,ASSY;AUTO	S.N.A
....4	GT801	AA60-40014A	PIN-GT,ASSY;AUTO	S.N.A
....4	GT802	AA60-40014A	PIN-GT,ASSY;AUTO	S.N.A
....4	GT803	AA60-40014A	PIN-GT,ASSY;AUTO	S.N.A
....4	GT804	AA60-40014A	PIN-GT,ASSY;AUTO	S.N.A
....4	GT805	AA60-40014A	PIN-GT,ASSY;AUTO	S.N.A
....4	GT806	AA60-40014A	PIN-GT,ASSY;AUTO	S.N.A
....4	GTT01	AA60-40014A	PIN-GT,ASSY;AUTO	S.N.A
....4	GTT02	AA60-40014A	PIN-GT,ASSY;AUTO	S.N.A

Level	Loc.No.	Code No.	Description;Specification	Remark
....4	GTT04	AA60-40014A	PIN-GT,ASSY;AUTO	S.N.A
....4	GTT06	AA60-40014A	PIN-GT,ASSY;AUTO	S.N.A
....4	LV704	2701-000168	INDUCTOR-AXIAL;3.3UH,5%,2534	
....4	LV705	2701-000168	INDUCTOR-AXIAL;3.3UH,5%,2534	
....4	T0087	1203-000293	IC-POSI.FIXED REG.;7808,TO-220,3P,-,PLAS	
....4	R125	2001-000527	R-CARBON;22OHM,5%,1/8W,AA,TP,1.8X3.2MM	
....4	R075	2001-001107	R-CARBON(S);220ohm,5%,1/2W,AA,TP,2.4x6.4	
....4	DZ016	0403-000510	DIODE-ZENER;MTZJ6.2B,5.96-6.27V,500MW,DO	
....4	DZ016	0403-000716	DIODE-ZENER;MTZJ4.7B,4.59-4.77V,500MW,DO	
....4	R075	2001-001050	R-CARBON(S);1.5KOHM,5%,1/2W,AA,TP,2.4X6.	
....4	R075	2001-001195	R-CARBON(S);82OHM,5%,1/2W,AA,TP,2.4X6.4M	
....4	C598	2201-000558	C-CERAMIC,DISC;0.47NF,10%,50V,Y5P,TP,5X3	
....4	0	AA41-01024D	PCB MAIN;CT-29K10G,1,D,FR-1,245*330*1.6,	S.N.A
....4	CN906	3711-002643	CONNECTOR-HEADER;BOX,4P,1R,2.5mm,STRAIGH	
....4	CN906	3711-002644	CONNECTOR-HEADER;BOX,5P,1R,2.5mm,STRAIGH	
...3	IC504	BH99-00007T	ASSY HEAT/SINK;BH62-00007A,SCREW,TDA2030	S.N.A
....4	H/S	0205-001154	OIL-SILICON;G746,-,-	S.N.A
....4	DU410	1201-000010	IC-OP AMP;2030,PENTAWATT,5P,-,SINGLE,-,C	
....4	T0081	6003-000334	SCREW-TAPTITE;RH,+,2S,M3,L6,ZPC(YEL),SWR	S.N.A
....4	H/S	BH62-00007A	HEAT SINK-TR;-,T1.0,L20*H30,CDA	S.N.A
...3	C701	2401-003031	C-AL;470uF,20%,450V,GP,BK,35x45mm,1	
...3	T0568	AA39-30007B	CBF IF;-,T,150mm,1365#26	
⚠...3	CISS	0401-000005	DIODE-SWITCHING;1N4148,75V,150MA,DO-35,T	
...3	M0018	AA97-15547C	ASSY MICOM;,KS7A,GOLD RUSH,VCT49XX,T-GRN	
....4	T0119	AA09-00441A	IC MICOM;VCT4942,ONE CHIP,88P,1.8/3.3/5/	S.N.A
...3	IC602	BP96-00418B	ASSY HEAT SINK P;AA62-30182F,SCREW,TDA72	S.N.A
....4	H/S	0205-001154	OIL-SILICON;G746,-,-	S.N.A
....4	T0085	1201-002118	IC-AUDIO AMP;TDA7297SA,ZIP,15P,-,DUAL,32	
....4	T0081	6003-000335	SCREW-TAPTITE;RH,+,2S,M3,L8,ZPC(YEL),SWR	S.N.A
....4	H/S	AA61-01390A	BRACKET-IC;CT-29A20HR,SECC,T1.0	S.N.A
....4	H/S	AA62-30182F	HEAT SINK-ES;CS29M6,A6063S,T2.0,26.2,52.	S.N.A
...3	DZ016	0403-000714	DIODE-ZENER;MTZJ3.3B,3.32-3.53V,500MW,DO	
..2	T0091	AA94-14775A	ASSY PCB MISC-A/V SIDE;CL29Z6PQUX/XAZ,KS	
...3		0202-001366	SOLDER-WIRE FLUX;-,RS60S,D1.2,63Sn/37Pb,	S.N.A
...3	T0081	6003-001268	SCREW-TAPTITE;TH,+,B,M4,L12,ZPC(YEL),SWR	S.N.A
...3	T0245	AA39-20009D	LEAD CONNECTOR-ASSY;,1P,500,YFH800-01,16	
...3		AA63-10002A	BAND-TIE;NYLON66 V2,L100,NTR	S.N.A
...3		AA96-00938S	ASSY COVER P-A/V;29Z6,SEDA,HIPS,HB,G4309	S.N.A
....4		6902-000611	BAG ROLL;PE FOAM,T1.0,-,-,-,-,-	S.N.A
....4	T0259	AA63-00571A	COVER-A/V;29Z6,HIPS,HB,G4309,DGN-1189	S.N.A
....4	T0578	AA64-02667P	INLAY AV;Z6,Z7,PS,T0.3,SHEET,DGN-K189,KS	
....4	T0069	AA60-00091D	SPACER-FELT;-,FELT,200X10,-,-,BLK,T0.35,	S.N.A
...3		AA97-15530A	ASSY AUTO-A/V SIDE;CL29Z6PQUX/XAZ,KS7A,G	S.N.A
....4	R125	2001-000969	R-CARBON;75OHM,5%,1/8W,AA,TP,1.8X3.2MM	
....4	R125	2001-000969	R-CARBON;75OHM,5%,1/8W,AA,TP,1.8X3.2MM	
....4	C689	2202-000121	C-CERAMIC,MLC-AXIAL;100pF,10%,50V,Y5P,TP	
....4	C689	2202-000121	C-CERAMIC,MLC-AXIAL;100pF,10%,50V,Y5P,TP	
....4	C689	2202-000231	C-CERAMIC,MLC-AXIAL;0.33NF,10%,50V,Y5P,T	
....4	C689	2202-000231	C-CERAMIC,MLC-AXIAL;0.33NF,10%,50V,Y5P,T	
....4	L701	2701-000114	INDUCTOR-AXIAL;10UH,10%,2534	
....4	L702	2701-000114	INDUCTOR-AXIAL;10UH,10%,2534	
....4	L703	2701-000168	INDUCTOR-AXIAL;3.3UH,5%,2534	
....4	L704	2701-000168	INDUCTOR-AXIAL;3.3UH,5%,2534	
....4	L2514	3301-000287	BEAD-AXIAL;,3.5x1.0x6.0mm,3000mA,TP,,,50	
....4	L2514	3301-000287	BEAD-AXIAL;,3.5x1.0x6.0mm,3000mA,TP,,,50	
....4	0	AA41-01081A	PCB-A/V SIDE;CL29Z6,FR-1,1,A,330*245*1.6	S.N.A
...3	JK04	3722-000544	JACK-VHS;4P,11.5mm,AG,BLK,N	
...3	JA701	3722-001164	JACK-PIN;3P,3.4mm,SN,WH:YE:RE,#16-22	
...3	T0245	AA39-20068G	LEAD CONNECTOR-ASSY;,8P,700MM,YBNH025-08	
...3	T0245	AA39-20070J	LEAD CONNECTOR-ASSY;,7P,700MM,YBNH250-07	
..2	T0098	AA94-14776A	ASSY PCB MISC-TACT S/W,CONTROL;CL29Z6PQU	
...3		0202-001366	SOLDER-WIRE FLUX;-,RS60S,D1.2,63Sn/37Pb,	S.N.A
...3	T0081	6003-001268	SCREW-TAPTITE;TH,+,B,M4,L12,ZPC(YEL),SWR	S.N.A
...3	D0254	AA32-00012A	MODULE REMOCON;ORC-50HF2,38KHZ,940NM,MES	
...3	T0245	AA39-20069A	LEAD CONNECTOR-ASSY;,5P,500,YBNH025-05,6	
...3	T0005	AA96-00935K	ASSY COVER P-CONTROL;29Z6,ASIA,HIPS HB,G	S.N.A
....4	T0081	6003-001019	SCREW-TAPTITE;RH,+,B,M4,L12,ZPC(BLK),SWR	S.N.A
....4	CIS1	AA63-00569D	COVER-CONTROL;29Z6,HIPS,HB,G4309,DGN-118	S.N.A
....4		6902-000611	BAG ROLL;PE FOAM,T1.0,-,-,-,-,-	S.N.A
....4	T0022	AA64-02662A	KNOB-CONTROL;Z7,ABS,HB,G3676,S104M+W971	S.N.A
....4	T0069	AA60-00091D	SPACER-FELT;-,FELT,200X10,-,-,BLK,T0.35,	S.N.A
...3		AA97-15531A	ASSY AUTO-TACT S/W,CONTROL;CL29Z6PQUX/XA	S.N.A
⚠....4	CISS	0401-000005	DIODE-SWITCHING;1N4148,75V,150MA,DO-35,T	
⚠....4	CISS	0401-000005	DIODE-SWITCHING;1N4148,75V,150MA,DO-35,T	
....4	DZ016	0403-000508	DIODE-ZENER;MTZJ5.6B,5.45-5.73V,500MW,DO	
....4	R125	2001-000007	R-CARBON;3KOHM,5%,1/8W,AA,TP,1.8X3.2MM	
....4	R125	2001-000009	R-CARBON;20KOHM,5%,1/8W,AA,TP,1.8X3.2MM	

Level	Loc.No.	Code No.	Description;Specification	Remark
....4	R075	2001-000020	R-CARBON(S);22OHM,5%,1/2W,AA,TP,2.4X6.4M	
....4	R125	2001-000281	R-CARBON;100OHM,5%,1/8W,AA,TP,1.8X3.2MM	
....4	R125	2001-000577	R-CARBON;2KOHM,5%,1/8W,AA,TP,1.8X3.2MM	
....4	R125	2001-000878	R-CARBON;6.2KOHM,5%,1/8W,AA,TP,1.8X3.2MM	
....4	0	AA41-01082A	PCB-TACT SWITCH;CL29Z6,FR-1,1,A,245*245*	S.N.A
....4	SWP01	3404-000243	SWITCH-TACT;15V,20mA,160gf+-50gf,6x3.4mm	
....4	SWY01	3404-000243	SWITCH-TACT;15V,20mA,160gf+-50gf,6x3.4mm	
....4	SWY02	3404-000243	SWITCH-TACT;15V,20mA,160gf+-50gf,6x3.4mm	
....4	SWY03	3404-000243	SWITCH-TACT;15V,20mA,160gf+-50gf,6x3.4mm	
....4	SWY04	3404-000243	SWITCH-TACT;15V,20mA,160gf+-50gf,6x3.4mm	
....4	SWY05	3404-000243	SWITCH-TACT;15V,20mA,160gf+-50gf,6x3.4mm	
....4	SWY06	3404-000243	SWITCH-TACT;15V,20mA,160gf+-50gf,6x3.4mm	
...3	C701	2401-002291	C-AL;47uF,20%,16V,GP,TP,6.3x5,5	
...3	LDY02	0601-000262	LED;ROUND,RED,5mm,700nm	
...3	T0245	AA39-00100E	LEAD CONNECTOR-ASSY;,4P,600MM,YBNH250-04	
..2	T0065	AA94-13502B	ASSY PCB CRT;CL29Z6,29M21PQUX/XAZ,KS7A,G	
...3		0202-001366	SOLDER-WIRE FLUX;-,RS60S,D1.2,63Sn/37Pb,	S.N.A
...3	V999A	3704-001197	SOCKET-CRT;8P+SEN,29PI,22.5PI,NI+SN,-	
...3	CN906	3711-000024	CONNECTOR-HEADER;BOX,3P,1R,2.5mm,STRAIGH	
...3	CN906	3711-002641	CONNECTOR-HEADER;BOX,10P,1R,2.5MM,STRAIG	
...3	IC063	AA13-00111A	IC HYBRID;STK396-130,WT-32A20HD,12,105C,	
...3	T0245	AA39-00225A	LEAD CONNECTOR-ASSY;,10P,600MM,67096-010	
...3	T0245	AA39-20010B	LEAD CONNECTOR-ASSY;,1P,500,YFH800-01,S,	
...3	T0245	AA39-20010B	LEAD CONNECTOR-ASSY;,1P,500,YFH800-01,S,	
...3	T0245	AA39-20029K	LEAD CONNECTOR-ASSY;,7P,400,67096-007,S,	
...3	IC501	AA96-50311N	ASSY HEAT SINK P;AA62-30175D,TDA6109JF,S	S.N.A
....4	T0074	1201-002114	IC-VIDEO AMP;TDA6109JF,SDIP,9P,18.5mm,-,	
....4	T0081	6003-000334	SCREW-TAPTITE;RH,+,2S,M3,L6,ZPC(YEL),SWR	S.N.A
....4	H/S	AA62-30175D	HEAT SINK-PS;-,SECC,T1.0,-,33X15X30 FT-2	S.N.A
...3		AA97-15532B	ASSY AUTO-CRT;CL29Z6,29M21PQUX/XAZ,KS7A,	S.N.A
....4	T0083	0402-000254	DIODE-RECTIFIER;RGP10J,600V,1A,DO-41,TP	
....4	T0083	0402-000546	DIODE-RECTIFIER;TVR10G,400V,1.0A,DO-41,T	
....4	T0083	0402-000546	DIODE-RECTIFIER;TVR10G,400V,1.0A,DO-41,T	
....4	T0083	0402-000546	DIODE-RECTIFIER;TVR10G,400V,1.0A,DO-41,T	
....4	T0083	0402-000546	DIODE-RECTIFIER;TVR10G,400V,1.0A,DO-41,T	
....4	T0083	0402-000546	DIODE-RECTIFIER;TVR10G,400V,1.0A,DO-41,T	
....4	T0083	0402-000546	DIODE-RECTIFIER;TVR10G,400V,1.0A,DO-41,T	
....4	T0083	0402-000546	DIODE-RECTIFIER;TVR10G,400V,1.0A,DO-41,T	
....4	DZ016	0403-001211	DIODE-ZENER;MTZJ12B,11.8-12.3V,500MW,DO-	
....4	DZ016	0403-001211	DIODE-ZENER;MTZJ12B,11.8-12.3V,500MW,DO-	
....4	DZ016	0403-001211	DIODE-ZENER;MTZJ12B,11.8-12.3V,500MW,DO-	
....4	DZ016	0403-001211	DIODE-ZENER;MTZJ12B,11.8-12.3V,500MW,DO-	
....4	T0156	0501-000283	TR-SMALL SIGNAL;KSA539,PNP,400mW,TO-92,T	
....4	T0156	0501-000389	TR-SMALL SIGNAL;KSC815,NPN,400mW,TO-92,T	
....4	R125	2001-000281	R-CARBON;100OHM,5%,1/8W,AA,TP,1.8X3.2MM	
....4	R125	2001-000281	R-CARBON;100OHM,5%,1/8W,AA,TP,1.8X3.2MM	
....4	R125	2001-000281	R-CARBON;100OHM,5%,1/8W,AA,TP,1.8X3.2MM	
....4	R125	2001-000411	R-CARBON;18KOHM,5%,1/8W,AA,TP,1.8X3.2MM	
....4	R125	2001-000449	R-CARBON;2.2KOHM,5%,1/8W,AA,TP,1.8X3.2MM	
....4	R125	2001-000522	R-CARBON;22KOHM,5%,1/8W,AA,TP,1.8X3.2MM	
....4	R125	2001-000534	R-CARBON;240OHM,5%,1/8W,AA,TP,1.8X3.2MM	
....4	R125	2001-000761	R-CARBON;430OHM,5%,1/8W,AA,TP,1.8X3.2MM	
....4	R125	2001-000989	R-CARBON;820KOHM,5%,1/8W,AA,TP,1.8X3.2MM	
....4	R075	2001-001062	R-CARBON(S);10MOHM,5%,1/2W,AA,TP,2.4X6.4	
....4	R075	2001-001175	R-CARBON(S);62OHM,5%,1/2W,AA,TP,2.4X6.4M	
....4	R0521	2002-001008	R-COMPOSITION;1.8Kohm,10%,1/2W,AA,TP,3.7	
....4	R0521	2002-001008	R-COMPOSITION;1.8Kohm,10%,1/2W,AA,TP,3.7	
....4	R0521	2002-001008	R-COMPOSITION;1.8Kohm,10%,1/2W,AA,TP,3.7	
....4	RF10	2003-000458	R-METAL OXIDE(S);100ohm,5%,2W,AF,TP,4x12	
....4	RF03	2003-000995	R-METAL OXIDE(S);3.3Kohm,5%,2W,AF,TP,3.9	
....4	RF04	2003-000995	R-METAL OXIDE(S);3.3Kohm,5%,2W,AF,TP,3.9	
....4	RF05	2003-000995	R-METAL OXIDE(S);3.3Kohm,5%,2W,AF,TP,3.9	
....4	RF06	2003-000995	R-METAL OXIDE(S);3.3Kohm,5%,2W,AF,TP,3.9	
....4	RF07	2003-000998	R-METAL OXIDE;300ohm,5%,2W,AF,TP,3.9x10m	
....4	RF02	2003-001093	R-METAL OXIDE(S);12Kohm,5%,2W,AF,TP,3.9x	
....4	R516	2008-000205	R-FUSIBLE(S);10ohm,5%,1/2W,AF,TP,2.5x6.5	
....4	R514	2008-001015	R-FUSIBLE(S);1.5ohm,5%,2W,AF,TP,3.9x10mm	
....4	C598	2201-000017	C-CERAMIC,DISC;1NF,10%,50V,Y5P,TP,5X3.5M	
....4	C598	2201-000019	C-CERAMIC,DISC;10nF,+80-20%,500V,Y5V,TP,	
....4	C598	2201-000604	C-CERAMIC,DISC;0.056NF,+100-0%,500V,SL,T	
....4	C598	2201-000723	C-CERAMIC,DISC;4.7NF,20%,3KV,Y5U,TP,16X5	
....4	C598	2201-002103	C-CERAMIC,DISC;0.015NF,5%,500V,C0G,TP,6.	
....4	C2560	2301-000383	C-FILM,LEAD-PEF;10nF,5%,50V,TP,6x7x3.2mm	
....4	C508	2301-001259	C-FILM,LEAD-PPF;100nF,5%,400V,TP,19x8x16	
....4	C701	2401-000025	C-AL;100uF,20%,16V,GP,TP,6.3x11,5	
....4	C701	2401-000025	C-AL;100uF,20%,16V,GP,TP,6.3x11,5	
....4	C701	2401-000045	C-AL;10uF,20%,160V,GP,TP,10x16,5	

Level	Loc.No.	Code No.	Description;Specification	Remark
....4	C701	2401-000045	C-AL;10uF,20%,160V,GP,TP,10x16,5	
....4	C701	2401-000287	C-AL;100uF,20%,16V,WT,TP,6.3x11,5	
....4	C701	2401-000430	C-AL;10uF,20%,250V,GP,TP,10x16mm,5m	
....4	C701	2401-000832	C-AL;220uF,20%,25V,GP,TP,8x11.5,5	
....4	C701	2401-000832	C-AL;220uF,20%,25V,GP,TP,8x11.5,5	
....4	C701	2401-001563	C-AL;47uF,20%,400V,GP,TP,16x25,7.5	
....4	LF02	2701-000112	INDUCTOR-AXIAL;100UH,10%,3070	
....4	L502	2701-000178	INDUCTOR-AXIAL;33UH,10%,3070	
....4	F101	2901-000297	FILTER-EMI ON BOARD;-,3A,-,-,3.5x5,TP,-	
....4	F101	2901-000297	FILTER-EMI ON BOARD;-,3A,-,-,3.5x5,TP,-	
....4	L2514	3301-000287	BEAD-AXIAL;,3.5x1.0x6.0mm,3000mA,TP,,,50	
....4	CN906	3711-002642	CONNECTOR-HEADER;BOX,3P,1R,2.5mm,STRAIGH	
....4	CN906	3711-002646	CONNECTOR-HEADER;BOX,7P,1R,2.5mm,STRAIGH	
....4	LX085	AA27-90001B	COIL-SPARK,GAP;S-23,1.5KV,-,-,-,-,-,-,-	
....4	LX085	AA27-90001B	COIL-SPARK,GAP;S-23,1.5KV,-,-,-,-,-,-,-	
....4	LX085	AA27-90001B	COIL-SPARK,GAP;S-23,1.5KV,-,-,-,-,-,-,-	
....4	LX085	AA27-90001B	COIL-SPARK,GAP;S-23,1.5KV,-,-,-,-,-,-,-	
....4	LX085	AA27-90001B	COIL-SPARK,GAP;S-23,1.5KV,-,-,-,-,-,-,-	
....4	LX085	AA27-90001B	COIL-SPARK,GAP;S-23,1.5KV,-,-,-,-,-,-,-	
....4	LX085	AA27-90001B	COIL-SPARK,GAP;S-23,1.5KV,-,-,-,-,-,-,-	
....4	0	AA41-01025A	PCB CRT;,FR-1,1L,A,1.6T,245X245,KS7A,4A,	S.N.A
....4	GT501	AA60-40014A	PIN-GT,ASSY;AUTO	S.N.A
....4	GT504	AA60-40014A	PIN-GT,ASSY;AUTO	S.N.A
....4	GT505	AA60-40014A	PIN-GT,ASSY;AUTO	S.N.A
....4	GT507	AA60-40014A	PIN-GT,ASSY;AUTO	S.N.A
...3	M2893	BH39-00253E	LEAD CONNECTOR;GOLD RUSH,UL1007#26,3P,50	
...3		AA63-10002A	BAND-TIE;NYLON66 V2,L100,NTR	S.N.A

ASSY FIXING

1		AA91-08458A	ASSY FIXING;CL29Z6PQUX/XAZ,KS7A,GOLD RUS	S.N.A
..2	T0081	6003-000333	SCREW-TAPTITE;RH,+,2S,M3,L10,ZPC(YEL),SW	S.N.A
..2	T0081	6006-001095	SCREW-TAPTITE;WP,BH,+,M4,L12,ZPC(YEL),SW	S.N.A
..2	T0245	AA39-20010B	LEAD CONNECTOR-ASSY;,1P,500,YFH800-01,S,	
..2	T0070	AA61-01190A	HOLDER-CHASSIS;Z7,HIPS V0,G4309	S.N.A
..2		AA65-30009A	CLAMPER CORE-FBT;-,ABS,V0,-,BLK,-	S.N.A
..2		AA65-30018A	CLAMPER CORE-WIRE;DONG-A,NYLON-66,-,-,-,	S.N.A
..2	CLAMP	AA65-30104C	CLAMPER CORE-WIRE;ALL MODEL,NYLON 66,V2,	S.N.A
..2	T0130	AA96-02477A	ASSY COVER P-TERMINAL BOARD;29Z6,HIPS,V0	S.N.A
...3		AA64-02822R	INLAY-T/BOARD;Z6,PS,T0.5,SHEET,KS7A NT	S.N.A
...3		AA65-00025A	TERMINAL-BOARD ANT;,HIPS V0,BLK	S.N.A
⚠..2	T0066	AA96-20109C	ASSY POWER CORD;-,CP2/NO(4.0),H/C300,KKP	S.N.A
...3		3811-001609	WIRE-PVC CU;BCWA,300V,ROLL,-,#22,BLK	S.N.A
...3	T0268	AA39-10006X	CBF-POWER CORD;-,KKP419C,KLCE-2F,2.286MT	
...3	T0010	AA61-20284A	HOLDER;P-CORD,PP,-,-,-,BLK,VO,KE-002	S.N.A

ASSY P/MATERIAL

1		AA92-05371A	ASSY P/MATERIAL;29Z6	S.N.A
..2	T0214	AA60-40006A	PIN-STAPLE;AUTO,33X17.8X2.4,H18,33X17.8X	S.N.A
..2	T0172	AA69-02609A	BAND-PP;W18,CLEA,1G	S.N.A
..2		6902-000061	BAG AIR;LDPE,T0.2,L1000,W500,TRP,,,	S.N.A
..2		6902-000001	BAG AIR;LDPE,T0.2,L1800,W1000,TRP,,,LDPE	S.N.A
..2		6902-000007	BAG PE;HDPE/NITRON/HDPE,T0.015/T0.5/T0.0	S.N.A

ASSY ACCESSORY

1	M0045	AA92-10284A	ASSY ACCESSORY;CL29Z6PQUX/XAZ,KS7A,GOLD	S.N.A
..2		6902-000009	BAG PE;HDPE,T0.03,L400,W240,TRP,8,2,PE M	S.N.A
..2	T0511	AA68-03503A	MANUAL USERS;CL34Z6,SAMSUNG,BP,BRAZIL,MO	S.N.A
..2	0	AA68-03242B	MANUAL-WARRANTY CARD;TH-ENG,SAFETY GUIDE	
	S.N.A			
..2	T0074	AA59-00325C	REMOCON;GOLDRUSH,TM76A,200*54*30,52MX,46	
...3	TM76C	AA83-00097A	CKD-CASE TOP,C;TM76A,SEDA,AA59-00325C	S.N.A
...3	TM76	AA83-00098A	CKD-CASE BOTTOM;TM76A,SEDA,AA59-00325A	S.N.A
...3	TM76	AA83-00107A	CKD-DOOR COVER;TM76A,SEDA,AA59-00325A	S.N.A
...3	TM76	AA83-00114A	CKD-BATTERY-COVER;TM76A,SEDA,AA59-00325A	S.N.A
...3	TM76	AA83-00115A	CKD-WINDOW-RMC;TM76A,SEDA,AA59-00325A	S.N.A
...3	TM76C	AA83-00116A	CKD-INLAY-PC,C;TM76A,SEDA,AA59-00325C	S.N.A
...3	TM76C	AA83-00120A	CKD-RUBBER-TOP,A;TM76A,SEDA,AA59-00325A	S.N.A
...3	TM76	AA83-00122A	CKD-SCREW-TH;TM76A,SEDA,AA59-00325A	S.N.A
...3	TM76C	AA83-00123A	CKD-INLAY-BACK,C;TM76A,SEDA,AA59-00325C	S.N.A
...3	TM76	AA83-00125A	CKD-RUBBER-BOTTOM;TM76A,SEDA,AA59-00325A	S.N.A
...3	TM76	AA83-00126A	CKD-SPRING-PLUS;TM76A,SEDA,AA59-00325A	S.N.A
...3	TM76	AA83-00127A	CKD-SPRING-MINUS;TM76A,SEDA,AA59-00325A	S.N.A
...3	TM76	AA83-00128A	CKD-SPRING-COMMON;TM76A,SEDA,AA59-00325A	S.N.A
...3	TM76	AA83-00139A	CKD-IR-LED;AA59-00325A,SI-5312H	S.N.A
...3	TM76	AA83-00140A	CKD-PCB;AA59-00325A,FR1-SILVER	S.N.A
...3	TM76	AA83-00141A	CKD-IC;AA59-00325A,Z86L88-52MX	S.N.A
...3	TM76	AA83-00142A	CKD-CHIP-RESISTOR;AA59-00325A,2012 5% T/	S.N.A
...3	TM76	AA83-00143A	CKD-CHIP-CAPACITOR;AA59-00325A,CS2012Y5N	S.N.A
...3	TM76	AA83-00144A	CKD-CHIP-RESISTOR;AA59-00325A,2012 5% T/	S.N.A
...3	TM76	AA83-00145A	CKD-CHIP-RESISTOR;AA59-00325A,2012 5%T/R	S.N.A
...3	TM76	AA83-00146A	CKD-CHIP-TRANSISTOR;AA59-00325A,STC3265Y	S.N.A
...3	TM76	AA83-00147A	CKD-CHIP-DIODE;AA59-00325A,BAV70	S.N.A
...3	TM76	AA83-00148A	CKD-ELE CONDENSOR;AA59-00325A,SG 1 6 V 4	S.N.A
...3	TM76	AA83-00149A	CKD-RESONATOR;AA59-00325A,Z T T 8 . 0 0M	S.N.A
...3	TM76	AA83-00150A	CKD-CHIP-LED;AA59-00325A,C - 1 9 0 C K T	S.N.A
...3	TM76	AA83-00151A	CKD-CHIP-LED;AA59-00325A,LTST-190GKT	S.N.A
...3	TM76	AA83-00153A	CKD-INDICATOR-LED;TM76A,SEDA,AA59-00325A	S.N.A
...3	PE-BAG	AA83-00154A	CKD-PE-BAG;TM76A,SEDA,AA59-00325A	S.N.A
...3	LABEL	AA83-00157A	CKD-LABEL QC;TM76A,SEDA,AA59-00325A	S.N.A

ASSY COVER REAR

1	M0002	AA90-03248R	ASSY COVER REAR;29Z6,HIPS,HB,G4309,SV012	S.N.A
..2	T0015	AA64-02745G	CABINET BACK;29Z6,HIPS,HB,G4309,SV012P K	
..2	T0214	AA65-30008A	CLAMPER CORE-CORD;-,PE,HB,-,BLK,-	S.N.A

Yon can search for the updated part code through ITSELF web site.
URL:http://itself.sec.samsung.co.kr

5-5 CL34Z6PQUX/XAZ

ASSY COVER FRONT

Level	Loc.No.	Code No.	Description;Specification	Remark
1	M0001	AA90-05141E	ASSY COVER FRONT;CL34Z6PQUX/XAZ	S.N.A
..2	T0081	6003-001268	SCREW-TAPTITE;TH,+,B,M4,L12,ZPC(YEL),SWR	S.N.A
..2	T0081	6003-001268	SCREW-TAPTITE;TH,+,B,M4,L12,ZPC(YEL),SWR	S.N.A
..2	T0081	6003-001268	SCREW-TAPTITE;TH,+,B,M4,L12,ZPC(YEL),SWR	S.N.A
..2	T0081	AA60-10002A	SCREW-TAPPING;-,ZPC(YEL),M4,L12,RH,+,-,-	S.N.A
..2	T0081	AA60-10050T	SCREW-TAPPING;-,SWRCH18A,M4,L20,RH,+,2S,	S.N.A
..2	T0081	AA60-10050T	SCREW-TAPPING;-,SWRCH18A,M4,L20,RH,+,2S,	S.N.A
..2	T0081	AA60-10050T	SCREW-TAPPING;-,SWRCH18A,M4,L20,RH,+,2S,	S.N.A
..2	CRT+CF	AA60-10050V	BOLT-HEX;-,SWRCH18A,M6,L30,HH,+,WC,-,Z	S.N.A
..2	T0609	AA63-60004K	SPACER-GUM,CRT;-,NTR RUBBER,-,-,-,BLK,T2	S.N.A
..2	T0382	BP61-00495C	HOLDER-CARE;PJT,ACRYL-FOAM,T0.25,W30.0mm	S.N.A
..2	T0175	AA96-02408C	ASSY SPEAKER P;8ohm,SEDA,SEMIDOME,15W,90	S.N.A
...3	SEMIDOME	AA83-00089A	CKD-SPK SEMIDOME;SPK-Semidome,AA96-02408	S.N.A
...3	WIRE	AA83-00090A	CKD-SPK WIRE;SPK-Wire,AA96-02408C	S.N.A
...3	SCREW-SPK	AA83-00091A	CKD-SPK SCREW;SPK-Screw,AA96-02408C	S.N.A
...3	UINT-SPK	AA83-00092A	CKD-SPK UNIT;SPK-Unit,AA96-02408C	S.N.A
...3	E.V.A	AA83-00093A	CKD-SPK E.V.A;SPK-E.V.A,AA96-02408C	S.N.A
...3	CUSHION	AA83-00094A	CKD-SPK CUSHION;SPK Cushion,AA96-02408C	S.N.A
...3	RUBBER	AA83-00095A	CKD-SPK RUBBER;SPK RUBBER,AA96-02408C	S.N.A
...3	LABEL	AA83-00096A	CKD-SPK LABAL;SPK Label,AA96-02408C	S.N.A
..2	T0003	AA96-00934V	ASSY COVER P-FRONT;34Z6,NEW,SEDA,HIPS,HB	S.N.A
...3	T0081	6003-001019	SCREW-TAPTITE;RH,+,B,M4,L12,ZPC(BLK),SWR	S.N.A
...3	T0069	AA60-00091J	SPACER-FELT;-,FELT,330X10,-,-,BLK,T0.5,-	S.N.A
...3	CIS7	AA61-60003J	SPRING ETC-CS;-,SUS304,-,-,OD6,N7,OD6,-,	S.N.A
...3	T0003	AA64-02748U	CABINET FRONT;34Z6,NEW,HIPS,HB,G4309,SV0	S.N.A
...3	CIS3	AA64-02750A	DECORATION-POWER;29Z6,ABS,HB,GRAY,AL	S.N.A
...3	T0023	AA64-02751A	KNOB-POWER;29Z6,PC,VO,VIOLET	S.N.A
...3	T0061	AA64-02752A	WINDOW-REMOCON;29Z6,PC,VO,VIOLET	S.N.A
...3	T0059	AA64-02753A	INDICATOR LED;29Z6,ACRYL,HB,CLEAR	S.N.A
...3		AA65-00011C	CLAMPER CORE-WIRE;ALL MODEL,NYLON 66,V2,	S.N.A
...3		AA65-30105A	CLAMPER CORE-WIRE;ALL MODEL,NYLON 66,V2,	S.N.A
...3	T0382	BP61-00509C	HOLDER-CARE;PJT,ACRYL-FOAM,T0.25,W20.0mm	S.N.A
...3	T0057	BP64-00177A	BADGE-BRAND;ALL,AL,T1.5,70,11.3,BLK,SILI	S.N.A

ASSY CPT

Level	Loc.No.	Code No.	Description;Specification	Remark
1	T0521	AA91-07372N	ASSY CPT;CL34Z6,+380MG	S.N.A
⚠..2	T0063	AA03-10031V	CRT COLOR;A80AJZ90X06,+380MG,0.89MH,16.5	
..2	T0089	AA27-00217A	COIL DEGAUSSING;CPT TV 34INCH,4.4mH,80T,	
..2	T0527	AA61-01373A	HOLDER-D COIL;29K5,NYLON 66	S.N.A
..2		AA98-70011F	ASSY TBC WIRE P;KS4A/CT34A7DR,34,NTSC,2P	S.N.A

ASSY CHASSIS

Level	Loc.No.	Code No.	Description;Specification	Remark
1	M0017	AA91-08457B	ASSY CHASSIS;CL34Z6PQUX/XAZ,KS7A,GOLD RU	S.N.A
..2	T0065	AA94-13502A	ASSY PCB CRT;CL34Z6PQUX/XAZ,KS7A,GOLD RU	S.N.A
...3		0202-001366	SOLDER-WIRE FLUX;-,RS60S,D1.2,63Sn/37Pb,	S.N.A
...3	CN906	3711-000024	CONNECTOR-HEADER;BOX,3P,1R,2.5mm,STRAIGH	
...3	CN906	3711-002641	CONNECTOR-HEADER;BOX,10P,1R,2.5MM,STRAIG	
...3	IC063	AA13-00111A	IC HYBRID;STK396-130,WT-32A20HD,12,105C,	
...3	T0245	AA39-00225A	LEAD CONNECTOR-ASSY;,10P,600MM,67096-010	
...3	T0245	AA39-20010B	LEAD CONNECTOR-ASSY;,1P,500,YFH800-01,S,	
...3	T0245	AA39-20010B	LEAD CONNECTOR-ASSY;,1P,500,YFH800-01,S,	
...3	T0245	AA39-20029K	LEAD CONNECTOR-ASSY;,7P,400,67096-007,S,	
...3	IC501	AA96-50311N	ASSY HEAT SINK P;AA62-30175D,TDA6109JF,S	S.N.A
....4	T0074	1201-002114	IC-VIDEO AMP;TDA6109JF,SDIP,9P,18.5mm,-,	
....4	T0081	6003-000334	SCREW-TAPTITE;RH,+,2S,M3,L6,ZPC(YEL),SWR	S.N.A
....4	H/S	AA62-30175D	HEAT SINK-PS;-,SECC,T1.0,-,33X15X30 FT-2	S.N.A
...3		AA97-15532A	ASSY AUTO-CRT;CL34Z6PQUX/XAZ,KS7A,GOLD R	S.N.A
....4	T0083	0402-000254	DIODE-RECTIFIER;RGP10J,600V,1A,DO-41,TP	
....4	T0083	0402-000546	DIODE-RECTIFIER;TVR10G,400V,1.0A,DO-41,T	
....4	T0083	0402-000546	DIODE-RECTIFIER;TVR10G,400V,1.0A,DO-41,T	
....4	T0083	0402-000546	DIODE-RECTIFIER;TVR10G,400V,1.0A,DO-41,T	
....4	T0083	0402-000546	DIODE-RECTIFIER;TVR10G,400V,1.0A,DO-41,T	
....4	T0083	0402-000546	DIODE-RECTIFIER;TVR10G,400V,1.0A,DO-41,T	
....4	T0083	0402-000546	DIODE-RECTIFIER;TVR10G,400V,1.0A,DO-41,T	
....4	DZ016	0403-001211	DIODE-ZENER;MTZJ12B,11.8-12.3V,500MW,DO-	
....4	DZ016	0403-001211	DIODE-ZENER;MTZJ12B,11.8-12.3V,500MW,DO-	
....4	DZ016	0403-001211	DIODE-ZENER;MTZJ12B,11.8-12.3V,500MW,DO-	
....4	DZ016	0403-001211	DIODE-ZENER;MTZJ12B,11.8-12.3V,500MW,DO-	
....4	T0156	0501-000283	TR-SMALL SIGNAL;KSA539,PNP,400mW,TO-92,T	
....4	T0156	0501-000389	TR-SMALL SIGNAL;KSC815,NPN,400mW,TO-92,T	
....4	R125	2001-000281	R-CARBON;100OHM,5%,1/8W,AA,TP,1.8X3.2MM	
....4	R125	2001-000281	R-CARBON;100OHM,5%,1/8W,AA,TP,1.8X3.2MM	
....4	R125	2001-000281	R-CARBON;100OHM,5%,1/8W,AA,TP,1.8X3.2MM	
....4	R125	2001-000411	R-CARBON;18KOHM,5%,1/8W,AA,TP,1.8X3.2MM	
....4	R125	2001-000449	R-CARBON;2.2KOHM,5%,1/8W,AA,TP,1.8X3.2MM	
....4	R125	2001-000522	R-CARBON;22KOHM,5%,1/8W,AA,TP,1.8X3.2MM	
....4	R125	2001-000534	R-CARBON;240OHM,5%,1/8W,AA,TP,1.8X3.2MM	
....4	R125	2001-000761	R-CARBON;430OHM,5%,1/8W,AA,TP,1.8X3.2MM	
....4	R125	2001-000989	R-CARBON;820KOHM,5%,1/8W,AA,TP,1.8X3.2MM	
....4	R075	2001-001062	R-CARBON(S);10MOHM,5%,1/2W,AA,TP,2.4X6.4	
....4	R075	2001-001175	R-CARBON(S);62OHM,5%,1/2W,AA,TP,2.4X6.4M	
....4	R0521	2002-001008	R-COMPOSITION;1.8Kohm,10%,1/2W,AA,TP,3.7	
....4	R0521	2002-001008	R-COMPOSITION;1.8Kohm,10%,1/2W,AA,TP,3.7	
....4	R0521	2002-001008	R-COMPOSITION;1.8Kohm,10%,1/2W,AA,TP,3.7	
....4	RF10	2003-000458	R-METAL OXIDE(S);100ohm,5%,2W,AF,TP,4x12	
....4	RF03	2003-000995	R-METAL OXIDE(S);3.3Kohm,5%,2W,AF,TP,3.9	
....4	RF04	2003-000995	R-METAL OXIDE(S);3.3Kohm,5%,2W,AF,TP,3.9	
....4	RF05	2003-000995	R-METAL OXIDE(S);3.3Kohm,5%,2W,AF,TP,3.9	
....4	RF06	2003-000995	R-METAL OXIDE(S);3.3Kohm,5%,2W,AF,TP,3.9	
....4	RF07	2003-000998	R-METAL OXIDE;300ohm,5%,2W,AF,TP,3.9x10m	
....4	RF02	2003-001093	R-METAL OXIDE(S);12Kohm,5%,2W,AF,TP,3.9x	
....4	R516	2008-000205	R-FUSIBLE(S);10ohm,5%,1/2W,AF,TP,2.5x6.5	
....4	C598	2201-000017	C-CERAMIC,DISC;1NF,10%,50V,Y5P,TP,5X3.5M	
....4	C598	2201-000019	C-CERAMIC,DISC;10nF,+80-20%,500V,Y5V,TP,	
....4	C598	2201-000604	C-CERAMIC,DISC;0.056NF,+100-0%,500V,SL,T	
....4	C598	2201-000723	C-CERAMIC,DISC;4.7NF,20%,3KV,Y5U,TP,16X5	
....4	C598	2201-002103	C-CERAMIC,DISC;0.015NF,5%,500V,C0G,TP,6.	
....4	C2560	2301-000383	C-FILM,LEAD-PEF;10nF,5%,50V,TP,6x7x3.2mm	
....4	C508	2301-001259	C-FILM,LEAD-PPF;100nF,5%,400V,TP,19x8x16	
....4	C701	2401-000025	C-AL;100uF,20%,16V,GP,TP,6.3x11,5	
....4	C701	2401-000025	C-AL;100uF,20%,16V,GP,TP,6.3x11,5	
....4	C701	2401-000045	C-AL;10uF,20%,160V,GP,TP,10x16,5	
....4	C701	2401-000045	C-AL;10uF,20%,160V,GP,TP,10x16,5	
....4	C701	2401-000287	C-AL;100uF,20%,16V,WT,TP,6.3x11,5	
....4	C701	2401-000430	C-AL;10uF,20%,250V,GP,TP,10x16mm,5m	
....4	C701	2401-000832	C-AL;220uF,20%,25V,GP,TP,8x11.5,5	
....4	C701	2401-000832	C-AL;220uF,20%,25V,GP,TP,8x11.5,5	
....4	C701	2401-001563	C-AL;47uF,20%,400V,GP,TP,16x25,7.5	
....4	LF02	2701-000112	INDUCTOR-AXIAL;100UH,10%,3070	
....4	L502	2701-000178	INDUCTOR-AXIAL;33UH,10%,3070	
....4	F101	2901-000297	FILTER-EMI ON BOARD;-,3A,-,-,3.5x5,TP,-	
....4	F101	2901-000297	FILTER-EMI ON BOARD;-,3A,-,-,3.5x5,TP,-	
....4	L2514	3301-000287	BEAD-AXIAL;,3.5x1.0x6.0mm,3000mA,TP,,,50	
....4	CN906	3711-002642	CONNECTOR-HEADER;BOX,3P,1R,2.5mm,STRAIGH	
....4	CN906	3711-002646	CONNECTOR-HEADER;BOX,7P,1R,2.5mm,STRAIGH	
....4	LX085	AA27-90001B	COIL-SPARK,GAP;S-23,1.5KV,-,-,-,-,-,-,-,	
....4	LX085	AA27-90001B	COIL-SPARK,GAP;S-23,1.5KV,-,-,-,-,-,-,-,	
....4	LX085	AA27-90001B	COIL-SPARK,GAP;S-23,1.5KV,-,-,-,-,-,-,-,	
....4	LX085	AA27-90001B	COIL-SPARK,GAP;S-23,1.5KV,-,-,-,-,-,-,-,	
....4	LX085	AA27-90001B	COIL-SPARK,GAP;S-23,1.5KV,-,-,-,-,-,-,-,	
....4	LX085	AA27-90001B	COIL-SPARK,GAP;S-23,1.5KV,-,-,-,-,-,-,-,	
....4	LX085	AA27-90001B	COIL-SPARK,GAP;S-23,1.5KV,-,-,-,-,-,-,-,	
....4	0	AA41-01025A	PCB CRT;,FR-1,1L,A,1.6T,245X245,KS7A,4A,	S.N.A
....4	GT501	AA60-40014A	PIN-GT,ASSY;AUTO	S.N.A
....4	GT504	AA60-40014A	PIN-GT,ASSY;AUTO	S.N.A
....4	GT505	AA60-40014A	PIN-GT,ASSY;AUTO	S.N.A
....4	GT507	AA60-40014A	PIN-GT,ASSY;AUTO	S.N.A
....4	R514	2008-001135	R-FUSIBLE(S);3.9ohm,5%,1W,AF,TP,3.9x10mm	

Level	Loc.No.	Code No.	Description;Specification	Remark
...3	V999A	3704-001194	SOCKET-CRT;8P+SEN,29PI,22.5PI,NI+SN,-	
...3	M2893	BH39-00253E	LEAD CONNECTOR;GOLD RUSH,UL1007#26,3P,50	
...3		AA63-10002A	BAND-TIE;NYLON66 V2,L100,NTR	S.N.A
..2	M0014	AA94-14774B	ASSY PCB MAIN;CL34Z6PQUX/XAZ,KS7A,GOLD R	
...3		0202-001366	SOLDER-WIRE FLUX;-,RS60S,D1.2,63Sn/37Pb,	S.N.A
...3	T0083	0402-001295	DIODE-RECTIFIER;GUR460L-5700,600V,4A,DO-	
...3	T0083	0402-001599	DIODE-RECTIFIER;DGP30L,1500,3A,DO-201AD(	
...3	IC112	1103-001171	IC-EEPROM;24C161,2Kx8,DIP,8P,9.2x6.4mm,2	
...3	T0087	1203-001006	IC-POSI.FIXED REG.;78R05,TO-220F,4P,-,PL	
...3	T0900	1404-001045	THERMISTOR-NTC;4.7ohm,15%,2900K,35.0mW,T	
...3	C598	2201-000963	C-CERAMIC,DISC;1NF,20%,400V,Y5U,TP,9.5X6	
...3	C598	2201-000987	C-CERAMIC,DISC;2.2NF,20%,400V,Y5U,BK,12.	
⚠...3	C405S	2301-001338	C-FILM,LEAD-OTHER;0.68NF,5%,1.6KV,BK,28X	
⚠...3	CR403S	2303-000118	C-FILM,LEAD-PPF;10nF,5%,1.6KV,BK,31x19.5	
⚠...3	CR406S	2306-000235	C-FILM,LEAD-PPF;560NF,5%,400V,BK,26X22.5	
⚠...3	CX801S	2306-000318	C-FILM,LEAD-PPF;220NF,20%,250V,BK,-,22.5	
...3	C701	2401-003633	C-AL;220uF,20%,160V,GP,BK,22x25mm,10	
...3	LV251	2701-000116	INDUCTOR-AXIAL;10UH,10%,4298	
...3	XV201	2801-004019	CRYSTAL-UNIT;20.25MHz,30ppm,28-AAM,13pF,	
...3	ICV101	2904-001196	FILTER-SAW AV;44MHZ,SIP5K,ST,16.2DB,-,42	
⚠...3	RL801S	3501-001053	RELAY-POWER;5VDC,530MW,10000MA,1FORMA,15	
⚠...3	FP801S	3601-000414	FUSE-CARTRIDGE;250V,5A,SLOW-BLOW,GLASS,5	
...3	CN906	3711-000024	CONNECTOR-HEADER;BOX,3P,1R,2.5mm,STRAIGH	
...3	CN906	3711-002641	CONNECTOR-HEADER;BOX,10P,1R,2.5MM,STRAIG	
...3	CN906	3711-003043	CONNECTOR-HEADER;BOX,4P,1R,2.5MM,STRAIGH	
...3	CN906	3711-003043	CONNECTOR-HEADER;BOX,4P,1R,2.5MM,STRAIGH	
...3	JAR701	3722-001333	JACK-PIN;9P,3.2mm,NI,BLK,-	
...3	DVD_SVHS	3722-001596	JACK-PIN;3P/9P,3.5mm,NI,BLK(GRN/BLU/RED)	
⚠...3	T801S	AA26-00217A	TRANS SWITCHING;EER4950,KS7A BASIC,AC90-	
⚠...3	T401	AA26-50001R	TRANS-HORIZ.DRIVE;-,-,-,80MH,-,-,520UH,-	
...3	L409	AA27-00038A	COIL CHOKE;-,700UH,15X27,-,BK	
...3	L808	AA27-10002L	COIL CHOKE;-,24uH,K,-,2A,-,24UH-K,10x10m	
⚠...3	LX801S	AA29-00012A	FILTER LINE NOISE;CS29A6PF8X/HAC,-,0.1MA	
⚠...3	TU01S	AA40-00116A	TUNER;TECC1040SL32A(E),TECC1040SL32A(E),	
⚠...3	TU02S	AA40-00122A	TUNER;TMQH2-003A,C-TV TM(SUB),NTSC,181CH	
...3	GT301	AA60-40012D	PIN-GT,ASSY;T1.6,6-12.5-,NYLON66	S.N.A
...3	T0204	AA95-03224R	ASSY SUB PCB-PIP;CT-29K12P,ET,	
....4		0202-001366	SOLDER-WIRE FLUX;-,RS60S,D1.2,63Sn/37Pb,	S.N.A
....4	XP01	2801-004019	CRYSTAL-UNIT;20.25MHz,30ppm,28-AAM,13pF,	
....4	CN906	3711-002706	CONNECTOR-HEADER;NOWALL,8P,1R,2.5mm,ANGL	
....4	CN906	3711-002709	CONNECTOR-HEADER;NOWALL,12P,1R,2.5mm,ANG	
....4	HCP01	AA61-10068A	BRACKET-PCB;M2160,SPTE,T0.3,-,-,-,-	S.N.A
....4		AA97-14426M	ASSY AUTO-PIP;0	S.N.A
.....5	C701	2401-000025	C-AL;100uF,20%,16V,GP,TP,6.3x11,5	
.....5	C701	2401-000025	C-AL;100uF,20%,16V,GP,TP,6.3x11,5	
.....5	C701	2401-000050	C-AL;10uF,20%,16V,GP,TP,5x11,2.5	
.....5	C701	2401-000050	C-AL;10uF,20%,16V,GP,TP,5x11,2.5	
.....5	C701	2401-000050	C-AL;10uF,20%,16V,GP,TP,5x11,2.5	
.....5	C701	2401-000050	C-AL;10uF,20%,16V,GP,TP,5x11,2.5	
.....5	C701	2401-000050	C-AL;10uF,20%,16V,GP,TP,5x11,2.5	
.....5	C701	2401-000603	C-AL;1UF,20%,50V,GP,TP,5X11,2	
.....5	C701	2401-000667	C-AL;2.2uF,20%,50V,WT,TP,5x11,5	
.....5	C701	2401-000667	C-AL;2.2uF,20%,50V,WT,TP,5x11,5	
.....5		AA97-13909S	ASSY SMD-PIP;0,0	S.N.A
⚠.....6	CISS	0401-000133	DIODE-SWITCHING;RLS4148,75V,150MA,LL-34,	
⚠.....6	CISS	0401-000133	DIODE-SWITCHING;RLS4148,75V,150MA,LL-34,	
⚠.....6	CISS	0401-000133	DIODE-SWITCHING;RLS4148,75V,150MA,LL-34,	
⚠.....6	CISS	0401-000133	DIODE-SWITCHING;RLS4148,75V,150MA,LL-34,	
.....6	DZ016	0403-000620	DIODE-ZENER;RLZ5.6B,5.45-5.73V,500MW,LL-	
.....6	DZ016	0403-000620	DIODE-ZENER;RLZ5.6B,5.45-5.73V,500MW,LL-	
.....6	DZ016	0403-001127	DIODE-ZENER;02DZ5.1,4.98-5.2V,200MW,SOD-	
.....6	T0156	0501-000280	TR-SMALL SIGNAL;KSA1182,PNP,150mW,SOT-23	
.....6	T0156	0501-000280	TR-SMALL SIGNAL;KSA1182,PNP,150mW,SOT-23	
.....6	T0156	0501-000280	TR-SMALL SIGNAL;KSA1182,PNP,150mW,SOT-23	
.....6	T0156	0501-000344	TR-SMALL SIGNAL;KSC1623-G,NPN,200mW,SOT-	
.....6	T0156	0501-000344	TR-SMALL SIGNAL;KSC1623-G,NPN,200mW,SOT-	
.....6	T0156	0501-000344	TR-SMALL SIGNAL;KSC1623-G,NPN,200mW,SOT-	
.....6	T0156	0501-000344	TR-SMALL SIGNAL;KSC1623-G,NPN,200mW,SOT-	
.....6	T0087	1203-001359	IC-POSI.FIXED REG.;1086,TO-263,3P,15.8MM	
.....6	ICP01	1204-002100	IC-PICTURE PROCESS;SDA9488X-B31,SOIC,28P	
.....6	RO87	2007-000070	R-CHIP;0ohm,5%,1/10W,TP,1608	
.....6	RO87	2007-000070	R-CHIP;0ohm,5%,1/10W,TP,1608	
.....6	RO87	2007-000070	R-CHIP;0ohm,5%,1/10W,TP,1608	
.....6	RO87	2007-000074	R-CHIP;100ohm,5%,1/10W,TP,1608	
.....6	RO87	2007-000074	R-CHIP;100ohm,5%,1/10W,TP,1608	
.....6	RO87	2007-000074	R-CHIP;100ohm,5%,1/10W,TP,1608	
.....6	RO87	2007-000074	R-CHIP;100ohm,5%,1/10W,TP,1608	

Level	Loc.No.	Code No.	Description;Specification	Remark
.....6	RO87	2007-000074	R-CHIP;100ohm,5%,1/10W,TP,1608	
.....6	RO87	2007-000078	R-CHIP;1Kohm,5%,1/10W,TP,1608	
.....6	RO87	2007-000078	R-CHIP;1Kohm,5%,1/10W,TP,1608	
.....6	RO87	2007-000078	R-CHIP;1Kohm,5%,1/10W,TP,1608	
.....6	RO87	2007-000078	R-CHIP;1Kohm,5%,1/10W,TP,1608	
.....6	RO87	2007-000078	R-CHIP;1Kohm,5%,1/10W,TP,1608	
.....6	RO87	2007-000078	R-CHIP;1Kohm,5%,1/10W,TP,1608	
.....6	RO87	2007-000078	R-CHIP;1Kohm,5%,1/10W,TP,1608	
.....6	RO87	2007-000078	R-CHIP;1Kohm,5%,1/10W,TP,1608	
.....6	RO87	2007-000078	R-CHIP;1Kohm,5%,1/10W,TP,1608	
.....6	RO87	2007-000078	R-CHIP;1Kohm,5%,1/10W,TP,1608	
.....6	RO87	2007-000084	R-CHIP;4.7Kohm,5%,1/10W,TP,1608	
.....6	RO87	2007-000084	R-CHIP;4.7Kohm,5%,1/10W,TP,1608	
.....6	RO87	2007-000084	R-CHIP;4.7Kohm,5%,1/10W,TP,1608	
.....6	RO87	2007-000097	R-CHIP;47Kohm,5%,1/10W,TP,1608	
.....6	RO87	2007-000097	R-CHIP;47Kohm,5%,1/10W,TP,1608	
.....6	RO87	2007-000097	R-CHIP;47Kohm,5%,1/10W,TP,1608	
.....6	RO87	2007-000097	R-CHIP;47Kohm,5%,1/10W,TP,1608	
.....6	RO87	2007-000119	R-CHIP;560ohm,5%,1/10W,TP,1608	
.....6	RO87	2007-000119	R-CHIP;560ohm,5%,1/10W,TP,1608	
.....6	RO87	2007-000119	R-CHIP;560ohm,5%,1/10W,TP,1608	
.....6	RO87	2007-000121	R-CHIP;820ohm,5%,1/10W,TP,1608	
.....6	RO87	2007-002425	R-CHIP;1ohm,5%,1/10W,TP,1608	
.....6	T0657	2203-000181	C-CER,CHIP;100nF,+80-20%,25V,Y5V,TP,2012	
.....6	T0657	2203-000181	C-CER,CHIP;100nF,+80-20%,25V,Y5V,TP,2012	
.....6	T0657	2203-000181	C-CER,CHIP;100nF,+80-20%,25V,Y5V,TP,2012	
.....6	T0657	2203-000257	C-CER,CHIP;10nF,10%,50V,X7R,TP,1608	
.....6	T0657	2203-000257	C-CER,CHIP;10nF,10%,50V,X7R,TP,1608	
.....6	T0657	2203-000257	C-CER,CHIP;10nF,10%,50V,X7R,TP,1608	
.....6	T0657	2203-000257	C-CER,CHIP;10nF,10%,50V,X7R,TP,1608	
.....6	T0657	2203-000257	C-CER,CHIP;10nF,10%,50V,X7R,TP,1608	
.....6	T0657	2203-000257	C-CER,CHIP;10nF,10%,50V,X7R,TP,1608	
.....6	T0657	2203-000257	C-CER,CHIP;10nF,10%,50V,X7R,TP,1608	
.....6	T0657	2203-000257	C-CER,CHIP;10nF,10%,50V,X7R,TP,1608	
.....6	T0657	2203-000384	C-CER,CHIP;0.015NF,5%,50V,C0G,TP,1608	
.....6	T0657	2203-000384	C-CER,CHIP;0.015NF,5%,50V,C0G,TP,1608	
.....6	T0657	2203-005030	C-CER,CHIP;470nF,+80-20%,50V,Y5V,TP,3216	
.....6	T0657	2203-005030	C-CER,CHIP;470nF,+80-20%,50V,Y5V,TP,3216	
.....6	T0052	2703-000392	INDUCTOR-SMD;10uH,5%,4532	
.....6	T0052	2703-000392	INDUCTOR-SMD;10uH,5%,4532	
.....6	PCB	AA41-00466B	PCB-PIP;CS29A6PF8X,CEM-3,2L,A,1.6T,180X2	S.N.A
.....6		0202-001376	SOLDER-CREAM;RX3603-2330HO,S45A,PASTE,Sn	S.N.A
....4	CN906	3711-002642	CONNECTOR-HEADER;BOX,3P,1R,2.5mm,STRAIGH	
....4	T0245	AA39-20033F	LEAD CONNECTOR-ASSY;,3P,300,67096-003,S,	
.....5		AA62-20002A	TUBE-PP;-,GSHS,T0.25,PI4,-,-,-,-,-	S.N.A
⚠...3	D801S	AA96-00276C	ASSY HEAT SINK P;-,BRIDGE ,AA62-00052A,G	S.N.A
....4		0205-001153	GREASE-SILICON;SC102,JAPAN,-	S.N.A
....4	T0083	0402-001399	DIODE-BRIDGE;GSIB660,600V,6A,SIP-4,BK	
....4	T0081	6003-000335	SCREW-TAPTITE;RH,+,2S,M3,L8,ZPC(YEL),SWR	S.N.A
....4		AA60-30003A	WASHER;T1.5,SBHG-1	S.N.A
....4		AA62-00052A	HEAT SINK-PS;-,-,-,SILVER,HOLE 18.5mm, 2	S.N.A
...3	HC801	AA96-00475J	ASSY HEAT SINK P;AA62-00066B,SCREW,FMG-G	S.N.A
....4	H/S	0205-001154	OIL-SILICON;G746,-,-	S.N.A
....4	T0083	0402-001230	DIODE-RECTIFIER;FMG-G2CS,1000V,3A,DO-41,	
....4	T0083	0402-001374	DIODE-RECTIFIER;FFPF06U20S,200V,6A,TO-22	
....4	T0087	1203-001006	IC-POSI.FIXED REG.;78R05,TO-220F,4P,-,PL	
....4	T0087	1203-001543	IC-POSI.FIXED REG.;78R33,TO-220,4P,400MI	
....4	T0081	6003-000334	SCREW-TAPTITE;RH,+,2S,M3,L6,ZPC(YEL),SWR	S.N.A
....4	H/S	AA62-00066B	HEAT SINK;D2,D3,AL ,T1.0,89,70,-,AA62-00	S.N.A
...3	IC301	AA96-00623F	ASSY HEAT SINK P;LA78045,SCREW,AA62-0005	S.N.A
....4	CIS	0205-001154	OIL-SILICON;G746,-,-	S.N.A
....4	T0088	1204-002183	IC-VERTICAL PROCESSO;LA78045,TO220,7P,15	
....4	T0081	6003-000334	SCREW-TAPTITE;RH,+,2S,M3,L6,ZPC(YEL),SWR	S.N.A
....4	CIS	AA62-00056A	HEAT SINK-PS;-,-,T1.0,-,41*35*70,D2,-,-,	S.N.A
...3	Q801	AA96-00624G	ASSY HEAT SINK P;SCREW,AA62-00057B,FQP63	S.N.A
....4	H/S	0205-001154	OIL-SILICON;G746,-,-	S.N.A
....4	Q409	0505-001723	FET-SILICON;FQP630TSTU,N,200V,9A,0.4OHM,	
....4	T0081	6003-000333	SCREW-TAPTITE;RH,+,2S,M3,L10,ZPC(YEL),SW	S.N.A
....4	H/S	AA60-30001A	WASHER-PLATE;M3,ID3.5,15X8.5,T1.0,SBHG	S.N.A
....4	H/S	AA62-00057B	HEAT SINK-PS;CT-29K12P,A1050S,1.0,41,60	S.N.A
...3	Q401	AA96-00624J	ASSY HEAT SINK P;SCREW,AA62-00057A,C5936	S.N.A
....4	H/S	0205-001154	OIL-SILICON;G746,-,-	S.N.A
....4	T0090	0502-001264	TR-POWER;2SC5936,NPN,40000mW,TOP-3E,ST,5	
....4	T0081	6003-000333	SCREW-TAPTITE;RH,+,2S,M3,L10,ZPC(YEL),SW	S.N.A
....4	H/S	AA60-30001A	WASHER-PLATE;M3,ID3.5,15X8.5,T1.0,SBHG	S.N.A
....4	H/S	AA62-00057A	HEAT SINK-PS;-,-,T1.0,-,41*20*60,D2,-,-,	S.N.A
⚠...3	IC801S	AA96-50371K	ASSY HEAT SINK P;AA62-30181H,SCREW,STR-X	S.N.A

Level	Loc.No.	Code No.	Description;Specification	Remark
....4	CIS	0205-001154	OIL-SILICON;G746,-,-	S.N.A
....4	T0081	6003-000333	SCREW-TAPTITE;RH,+,2S,M3,L10,ZPC(YEL),SW	S.N.A
....4	CIS	AA62-30181H	HEAT SINK-ES;-,AL6063 EXTR.,2,WHT,50MM,-	S.N.A
....4	IC063	AA13-00112A	IC HYBRID;STR-X6750B,CS29M6PF,7,-20 to +	
...3		AA97-15529B	ASSY AUTO-MAIN;CL34Z6PQUX/XAZ,KS7A,GOLD	S.N.A
⚠....4	CISS	0401-000005	DIODE-SWITCHING;1N4148,75V,150MA,DO-35,T	
⚠....4	CISS	0401-000005	DIODE-SWITCHING;1N4148,75V,150MA,DO-35,T	
⚠....4	CISS	0401-000005	DIODE-SWITCHING;1N4148,75V,150MA,DO-35,T	
⚠....4	CISS	0401-000005	DIODE-SWITCHING;1N4148,75V,150MA,DO-35,T	
⚠....4	CISS	0401-000005	DIODE-SWITCHING;1N4148,75V,150MA,DO-35,T	
⚠....4	CISS	0401-000005	DIODE-SWITCHING;1N4148,75V,150MA,DO-35,T	
⚠....4	CISS	0401-000005	DIODE-SWITCHING;1N4148,75V,150MA,DO-35,T	
⚠....4	CISS	0401-000005	DIODE-SWITCHING;1N4148,75V,150MA,DO-35,T	
⚠....4	CISS	0401-000005	DIODE-SWITCHING;1N4148,75V,150MA,DO-35,T	
⚠....4	CISS	0401-000006	DIODE-SWITCHING;BAV21,250V,200MA,DO-35,T	
⚠....4	CISS	0401-000006	DIODE-SWITCHING;BAV21,250V,200MA,DO-35,T	
....4	T0083	0402-000132	DIODE-RECTIFIER;1N4004,400V,1A,DO-41,TP	
....4	T0083	0402-000132	DIODE-RECTIFIER;1N4004,400V,1A,DO-41,TP	
....4	T0083	0402-000132	DIODE-RECTIFIER;1N4004,400V,1A,DO-41,TP	
....4	T0083	0402-000132	DIODE-RECTIFIER;1N4004,400V,1A,DO-41,TP	
....4	T0083	0402-000493	DIODE-RECTIFIER;1R5GU41,400V,1.5A,DO-15L	
....4	T0083	0402-000534	DIODE-RECTIFIER;RG10V,400V,1.2A,DO-201,T	
....4	T0083	0402-000537	DIODE-RECTIFIER;RH1A,600V,0.6A,DO-204AC	
....4	T0083	0402-000540	DIODE-RECTIFIER;RU20A,600V,1.5A,-,TP	
....4	T0083	0402-000546	DIODE-RECTIFIER;TVR10G,400V,1.0A,DO-41,T	
....4	T0083	0402-000546	DIODE-RECTIFIER;TVR10G,400V,1.0A,DO-41,T	
....4	T0083	0402-000546	DIODE-RECTIFIER;TVR10G,400V,1.0A,DO-41,T	
....4	T0083	0402-000546	DIODE-RECTIFIER;TVR10G,400V,1.0A,DO-41,T	
....4	DZ016	0403-000508	DIODE-ZENER;MTZJ5.6B,5.45-5.73V,500MW,DO	
....4	DZ016	0403-000508	DIODE-ZENER;MTZJ5.6B,5.45-5.73V,500MW,DO	
....4	DZ016	0403-000508	DIODE-ZENER;MTZJ5.6B,5.45-5.73V,500MW,DO	
....4	DZ016	0403-000508	DIODE-ZENER;MTZJ5.6B,5.45-5.73V,500MW,DO	
....4	DZ016	0403-000700	DIODE-ZENER;TZP33A,5%,1000MW,DO-41,TP	
....4	DZ016	0403-000700	DIODE-ZENER;TZP33A,5%,1000MW,DO-41,TP	
....4	DZ016	0403-000700	DIODE-ZENER;TZP33A,5%,1000MW,DO-41,TP	
....4	DZ016	0403-000714	DIODE-ZENER;MTZJ3.3B,3.32-3.53V,500MW,DO	
....4	DZ016	0403-000720	DIODE-ZENER;MTZJ9.1B,8.57-9.01V,500MW,DO	
....4	DZ016	0403-000720	DIODE-ZENER;MTZJ9.1B,8.57-9.01V,500MW,DO	
....4	DZ016	0403-000720	DIODE-ZENER;MTZJ9.1B,8.57-9.01V,500MW,DO	
....4	DZ016	0403-000720	DIODE-ZENER;MTZJ9.1B,8.57-9.01V,500MW,DO	
....4	DZ016	0403-000720	DIODE-ZENER;MTZJ9.1B,8.57-9.01V,500MW,DO	
....4	DZ016	0403-000720	DIODE-ZENER;MTZJ9.1B,8.57-9.01V,500MW,DO	
....4	DZ016	0403-000720	DIODE-ZENER;MTZJ9.1B,8.57-9.01V,500MW,DO	
....4	DZ016	0403-000720	DIODE-ZENER;MTZJ9.1B,8.57-9.01V,500MW,DO	
....4	DZ016	0403-000734	DIODE-ZENER;TZP15B,14.7-16.5V,1000MW,DO-	
....4	DZ016	0403-001221	DIODE-ZENER;UZ39BSB,35.36-37.19V,500MW,D	
....4	DZ016	0403-001320	DIODE-ZENER;MTZJ6.2C,6.16-6.4V,500MW,DO-	
....4	DZ016	0403-001321	DIODE-ZENER;MTZJ6.8C,6.7-6.97V,500MW,DO-	
....4	DZ016	0403-001329	DIODE-ZENER;MTZJ24B,22.75-23.73V,500MW,D	
....4	DZ016	0403-001329	DIODE-ZENER;MTZJ24B,22.75-23.73V,500MW,D	
....4	DZ016	0403-001329	DIODE-ZENER;MTZJ24B,22.75-23.73V,500MW,D	
....4	T0156	0501-000010	TR-SMALL SIGNAL;KSC1008,NPN,800mW,TO-92,	
....4	T0156	0501-000010	TR-SMALL SIGNAL;KSC1008,NPN,800mW,TO-92,	
....4	T0156	0501-000283	TR-SMALL SIGNAL;KSA539,PNP,400mW,TO-92,T	
....4	T0156	0501-000283	TR-SMALL SIGNAL;KSA539,PNP,400mW,TO-92,T	
....4	T0156	0501-000283	TR-SMALL SIGNAL;KSA539,PNP,400mW,TO-92,T	
....4	T0156	0501-000283	TR-SMALL SIGNAL;KSA539,PNP,400mW,TO-92,T	
....4	T0156	0501-000369	TR-SMALL SIGNAL;KSC2331-Y,NPN,1000mW,TO-	
....4	T0156	0501-000389	TR-SMALL SIGNAL;KSC815,NPN,400mW,TO-92,T	
....4	T0156	0501-000389	TR-SMALL SIGNAL;KSC815,NPN,400mW,TO-92,T	
....4	T0156	0501-000389	TR-SMALL SIGNAL;KSC815,NPN,400mW,TO-92,T	
....4	T0156	0501-000389	TR-SMALL SIGNAL;KSC815,NPN,400mW,TO-92,T	
....4	T0156	0501-000389	TR-SMALL SIGNAL;KSC815,NPN,400mW,TO-92,T	
....4	T0156	0501-000389	TR-SMALL SIGNAL;KSC815,NPN,400mW,TO-92,T	
....4	T0156	0501-000389	TR-SMALL SIGNAL;KSC815,NPN,400mW,TO-92,T	
....4	T0156	0501-000389	TR-SMALL SIGNAL;KSC815,NPN,400mW,TO-92,T	
....4	T0090	0502-001007	TR-POWER;KSC2073-H2,NPN,25W,TO-220,ST,6	
....4	Q409	0505-000109	FET-SILICON;2N7000,N,60V,200mA,5ohm,400m	
....4	Q409	0505-000109	FET-SILICON;2N7000,N,60V,200mA,5ohm,400m	
....4	Q409	0505-000109	FET-SILICON;2N7000,N,60V,200mA,5ohm,400m	
....4	IC012	1203-001217	IC-POSI.ADJUST REG.;431,TO-92,3P,4.58MIL	
....4	IC202	1203-001943	IC-VOL. DETECTOR;7025,TO-92,3P,-,PLASTIC	
....4	T0087	1203-001944	IC-POSI.FIXED REG.;78RM33,TO-220,3P,-,PL	
⚠....4	VP801S	1405-000152	VARISTOR;560V,2500A,14x8.5mm,TP	
⚠....4	VX801S	1405-000152	VARISTOR;560V,2500A,14x8.5mm,TP	
....4	R125	2001-000003	R-CARBON;330ohm,5%,1/8W,AA,TP,1.8x3.2mm	
....4	R125	2001-000003	R-CARBON;330ohm,5%,1/8W,AA,TP,1.8x3.2mm	

Level	Loc.No.	Code No.	Description;Specification	Remark
....4	R125	2001-000005	R-CARBON;390ohm,5%,1/8W,AA,TP,1.8x3.2mm	
....4	R125	2001-000005	R-CARBON;390ohm,5%,1/8W,AA,TP,1.8x3.2mm	
....4	R125	2001-000006	R-CARBON;2.4KOHM,5%,1/8W,AA,TP,1.8X3.2MM	
....4	R075	2001-000016	R-CARBON(S);1OHM,5%,1/2W,AA,TP,2.4X6.4MM	
....4	R075	2001-000020	R-CARBON(S);22OHM,5%,1/2W,AA,TP,2.4X6.4M	
....4	R075	2001-000020	R-CARBON(S);22OHM,5%,1/2W,AA,TP,2.4X6.4M	
....4	R075	2001-000037	R-CARBON(S);330OHM,5%,1/2W,AA,TP,2.4X6.4	
....4	R075	2001-000052	R-CARBON(S);3.3KOHM,5%,1/2W,AA,TP,2.4X6.	
....4	R075	2001-000052	R-CARBON(S);3.3KOHM,5%,1/2W,AA,TP,2.4X6.	
....4	R125	2001-000221	R-CARBON;1.2KOHM,5%,1/8W,AA,TP,1.8X3.2MM	
....4	R125	2001-000221	R-CARBON;1.2KOHM,5%,1/8W,AA,TP,1.8X3.2MM	
....4	R125	2001-000252	R-CARBON;1.6KOHM,5%,1/8W,AA,TP,1.8X3.2MM	
....4	R125	2001-000273	R-CARBON;100KOHM,5%,1/8W,AA,TP,1.8X3.2MM	
....4	R125	2001-000273	R-CARBON;100KOHM,5%,1/8W,AA,TP,1.8X3.2MM	
....4	R125	2001-000273	R-CARBON;100KOHM,5%,1/8W,AA,TP,1.8X3.2MM	
....4	R125	2001-000273	R-CARBON;100KOHM,5%,1/8W,AA,TP,1.8X3.2MM	
....4	R125	2001-000273	R-CARBON;100KOHM,5%,1/8W,AA,TP,1.8X3.2MM	
....4	R125	2001-000281	R-CARBON;100OHM,5%,1/8W,AA,TP,1.8X3.2MM	
....4	R125	2001-000281	R-CARBON;100OHM,5%,1/8W,AA,TP,1.8X3.2MM	
....4	R125	2001-000281	R-CARBON;100OHM,5%,1/8W,AA,TP,1.8X3.2MM	
....4	R125	2001-000281	R-CARBON;100OHM,5%,1/8W,AA,TP,1.8X3.2MM	
....4	R125	2001-000281	R-CARBON;100OHM,5%,1/8W,AA,TP,1.8X3.2MM	
....4	R125	2001-000281	R-CARBON;100OHM,5%,1/8W,AA,TP,1.8X3.2MM	
....4	R125	2001-000281	R-CARBON;100OHM,5%,1/8W,AA,TP,1.8X3.2MM	
....4	R125	2001-000281	R-CARBON;100OHM,5%,1/8W,AA,TP,1.8X3.2MM	
....4	R125	2001-000281	R-CARBON;100OHM,5%,1/8W,AA,TP,1.8X3.2MM	
....4	R125	2001-000281	R-CARBON;100OHM,5%,1/8W,AA,TP,1.8X3.2MM	
....4	R125	2001-000281	R-CARBON;100OHM,5%,1/8W,AA,TP,1.8X3.2MM	
....4	R125	2001-000281	R-CARBON;100OHM,5%,1/8W,AA,TP,1.8X3.2MM	
....4	R125	2001-000281	R-CARBON;100OHM,5%,1/8W,AA,TP,1.8X3.2MM	
....4	R125	2001-000281	R-CARBON;100OHM,5%,1/8W,AA,TP,1.8X3.2MM	
....4	R125	2001-000290	R-CARBON;10KOHM,5%,1/8W,AA,TP,1.8X3.2MM	
....4	R125	2001-000290	R-CARBON;10KOHM,5%,1/8W,AA,TP,1.8X3.2MM	
....4	R125	2001-000290	R-CARBON;10KOHM,5%,1/8W,AA,TP,1.8X3.2MM	
....4	R125	2001-000290	R-CARBON;10KOHM,5%,1/8W,AA,TP,1.8X3.2MM	
....4	R125	2001-000290	R-CARBON;10KOHM,5%,1/8W,AA,TP,1.8X3.2MM	
....4	R125	2001-000290	R-CARBON;10KOHM,5%,1/8W,AA,TP,1.8X3.2MM	
....4	R125	2001-000290	R-CARBON;10KOHM,5%,1/8W,AA,TP,1.8X3.2MM	
....4	R125	2001-000290	R-CARBON;10KOHM,5%,1/8W,AA,TP,1.8X3.2MM	
....4	R125	2001-000290	R-CARBON;10KOHM,5%,1/8W,AA,TP,1.8X3.2MM	
....4	R125	2001-000331	R-CARBON;12KOHM,5%,1/8W,AA,TP,1.8X3.2MM	
....4	R125	2001-000362	R-CARBON;150OHM,5%,1/8W,AA,TP,1.8X3.2MM	
....4	R125	2001-000362	R-CARBON;150OHM,5%,1/8W,AA,TP,1.8X3.2MM	
....4	R125	2001-000362	R-CARBON;150OHM,5%,1/8W,AA,TP,1.8X3.2MM	
....4	R125	2001-000376	R-CARBON;15OHM,5%,1/8W,AA,TP,1.8X3.2MM	
....4	R125	2001-000429	R-CARBON;1KOHM,5%,1/8W,AA,TP,1.8X3.2MM	
....4	R125	2001-000429	R-CARBON;1KOHM,5%,1/8W,AA,TP,1.8X3.2MM	
....4	R125	2001-000429	R-CARBON;1KOHM,5%,1/8W,AA,TP,1.8X3.2MM	
....4	R125	2001-000429	R-CARBON;1KOHM,5%,1/8W,AA,TP,1.8X3.2MM	
....4	R125	2001-000429	R-CARBON;1KOHM,5%,1/8W,AA,TP,1.8X3.2MM	
....4	R125	2001-000429	R-CARBON;1KOHM,5%,1/8W,AA,TP,1.8X3.2MM	
....4	R125	2001-000429	R-CARBON;1KOHM,5%,1/8W,AA,TP,1.8X3.2MM	
....4	R125	2001-000429	R-CARBON;1KOHM,5%,1/8W,AA,TP,1.8X3.2MM	
....4	R125	2001-000429	R-CARBON;1KOHM,5%,1/8W,AA,TP,1.8X3.2MM	
....4	R125	2001-000449	R-CARBON;2.2KOHM,5%,1/8W,AA,TP,1.8X3.2MM	
....4	R125	2001-000449	R-CARBON;2.2KOHM,5%,1/8W,AA,TP,1.8X3.2MM	
....4	R125	2001-000449	R-CARBON;2.2KOHM,5%,1/8W,AA,TP,1.8X3.2MM	
....4	R125	2001-000522	R-CARBON;22KOHM,5%,1/8W,AA,TP,1.8X3.2MM	
....4	R125	2001-000522	R-CARBON;22KOHM,5%,1/8W,AA,TP,1.8X3.2MM	
....4	R125	2001-000554	R-CARBON;270OHM,5%,1/8W,AA,TP,1.8X3.2MM	
....4	R125	2001-000554	R-CARBON;270OHM,5%,1/8W,AA,TP,1.8X3.2MM	
....4	R125	2001-000554	R-CARBON;270OHM,5%,1/8W,AA,TP,1.8X3.2MM	
....4	R125	2001-000591	R-CARBON;3.3KOHM,5%,1/8W,AA,TP,1.8X3.2MM	
....4	R125	2001-000613	R-CARBON;3.9KOHM,5%,1/8W,AA,TP,1.8X3.2MM	
....4	R125	2001-000660	R-CARBON;33KOHM,5%,1/8W,AA,TP,1.8X3.2MM	
....4	R125	2001-000666	R-CARBON;33OHM,5%,1/8W,AA,TP,1.8X3.2MM	
....4	R125	2001-000666	R-CARBON;33OHM,5%,1/8W,AA,TP,1.8X3.2MM	
....4	R125	2001-000666	R-CARBON;33OHM,5%,1/8W,AA,TP,1.8X3.2MM	
....4	R125	2001-000734	R-CARBON;4.7KOHM,5%,1/8W,AA,TP,1.8X3.2MM	
....4	R125	2001-000734	R-CARBON;4.7KOHM,5%,1/8W,AA,TP,1.8X3.2MM	
....4	R125	2001-000734	R-CARBON;4.7KOHM,5%,1/8W,AA,TP,1.8X3.2MM	
....4	R125	2001-000734	R-CARBON;4.7KOHM,5%,1/8W,AA,TP,1.8X3.2MM	
....4	R125	2001-000734	R-CARBON;4.7KOHM,5%,1/8W,AA,TP,1.8X3.2MM	
....4	R125	2001-000734	R-CARBON;4.7KOHM,5%,1/8W,AA,TP,1.8X3.2MM	
....4	R125	2001-000734	R-CARBON;4.7KOHM,5%,1/8W,AA,TP,1.8X3.2MM	

Level	Loc.No.	Code No.	Description;Specification	Remark
....4	R125	2001-000734	R-CARBON;4.7KOHM,5%,1/8W,AA,TP,1.8X3.2MM	
....4	R125	2001-000734	R-CARBON;4.7KOHM,5%,1/8W,AA,TP,1.8X3.2MM	
....4	R125	2001-000734	R-CARBON;4.7KOHM,5%,1/8W,AA,TP,1.8X3.2MM	
....4	R125	2001-000734	R-CARBON;4.7KOHM,5%,1/8W,AA,TP,1.8X3.2MM	
....4	R125	2001-000780	R-CARBON;470OHM,5%,1/8W,AA,TP,1.8X3.2MM	
....4	R125	2001-000832	R-CARBON;510OHM,5%,1/8W,AA,TP,1.8X3.2MM	
....4	R125	2001-000832	R-CARBON;510OHM,5%,1/8W,AA,TP,1.8X3.2MM	
....4	R125	2001-000832	R-CARBON;510OHM,5%,1/8W,AA,TP,1.8X3.2MM	
....4	R125	2001-000832	R-CARBON;510OHM,5%,1/8W,AA,TP,1.8X3.2MM	
....4	R125	2001-000869	R-CARBON;56OHM,5%,1/8W,AA,TP,1.8X3.2MM	
....4	R125	2001-000924	R-CARBON;680OHM,5%,1/8W,AA,TP,1.8X3.2MM	
....4	R125	2001-000924	R-CARBON;680OHM,5%,1/8W,AA,TP,1.8X3.2MM	
....4	R125	2001-000924	R-CARBON;680OHM,5%,1/8W,AA,TP,1.8X3.2MM	
....4	R125	2001-000969	R-CARBON;75OHM,5%,1/8W,AA,TP,1.8X3.2MM	
....4	R125	2001-000969	R-CARBON;75OHM,5%,1/8W,AA,TP,1.8X3.2MM	
....4	R125	2001-000969	R-CARBON;75OHM,5%,1/8W,AA,TP,1.8X3.2MM	
....4	R125	2001-000969	R-CARBON;75OHM,5%,1/8W,AA,TP,1.8X3.2MM	
....4	R125	2001-000969	R-CARBON;75OHM,5%,1/8W,AA,TP,1.8X3.2MM	
....4	R125	2001-000969	R-CARBON;75OHM,5%,1/8W,AA,TP,1.8X3.2MM	
....4	R125	2001-000969	R-CARBON;75OHM,5%,1/8W,AA,TP,1.8X3.2MM	
....4	R125	2001-000977	R-CARBON;8.2KOHM,5%,1/8W,AA,TP,1.8X3.2MM	
....4	R125	2001-000977	R-CARBON;8.2KOHM,5%,1/8W,AA,TP,1.8X3.2MM	
....4	R125	2001-000995	R-CARBON;820OHM,5%,1/8W,AA,TP,1.8X3.2MM	
....4	R075	2001-001040	R-CARBON(S);0.68OHM,5%,1/2W,AA,TP,2.4X6.	
....4	R075	2001-001070	R-CARBON(S);120OHM,5%,1/2W,AA,TP,2.4X6.4	
....4	R075	2001-001071	R-CARBON(S);12KOHM,5%,1/2W,AA,TP,2.4X6.4	
....4	R075	2001-001079	R-CARBON(S);15OHM,5%,1/2W,AA,TP,2.4X6.4M	
....4	R075	2001-001088	R-CARBON(S);1KOHM,5%,1/2W,AA,TP,2.4X6.4M	
....4	R075	2001-001088	R-CARBON(S);1KOHM,5%,1/2W,AA,TP,2.4X6.4M	
....4	R075	2001-001114	R-CARBON(S);270OHM,5%,1/2W,AA,TP,2.4X6.4	
....4	R075	2001-001115	R-CARBON(S);27KOHM,5%,1/2W,AA,TP,2.4X6.4	S.N.A
....4	R075	2001-001126	R-CARBON(S);300OHM,5%,1/2W,AA,TP,2.4X6.4	
....4	R075	2001-001131	R-CARBON(S);33KOHM,5%,1/2W,AA,TP,2.4X6.4	
....4	R075	2001-001139	R-CARBON(S);39KOHM,5%,1/2W,AA,TP,2.4X6.4	
....4	R075	2001-001150	R-CARBON(S);470KOHM,5%,1/2W,AA,TP,2.4X6.	
....4	R075	2001-001150	R-CARBON(S);470KOHM,5%,1/2W,AA,TP,2.4X6.	
....4	R075	2001-001152	R-CARBON(S);47KOHM,5%,1/2W,AA,TP,2.4X6.4	
....4	R075	2001-001168	R-CARBON(S);6.8KOHM,5%,1/2W,AA,TP,2.4X6.	
....4	R0521	2002-001010	R-COMPOSITION;1.8Mohm,5%,1/2W,AA,TP,3.7x	
....4	R0521	2002-001012	R-COMPOSITION;8.2Mohm,5%,1/2W,AA,TP,3.7x	
....4	R426	2003-000540	R-METAL OXIDE(S);1Kohm,5%,2W,AF,TP,4x12m	
....4	R802	2003-000586	R-METAL OXIDE(S);22Kohm,5%,2W,AF,TP,4x12	
....4	R803	2003-000586	R-METAL OXIDE(S);22Kohm,5%,2W,AF,TP,4x12	
....4	R804	2003-000586	R-METAL OXIDE(S);22Kohm,5%,2W,AF,TP,4x12	
....4	R830	2003-000586	R-METAL OXIDE(S);22Kohm,5%,2W,AF,TP,4x12	
....4	R831	2003-000586	R-METAL OXIDE(S);22Kohm,5%,2W,AF,TP,4x12	
....4	R309	2003-000652	R-METAL OXIDE(S);330ohm,5%,2W,AF,TP,4x12	
....4	R423	2003-001042	R-METAL OXIDE(S);5.6Kohm,5%,2W,AF,TP,3.9	
....4	R835	2003-002020	R-METAL OXIDE(S);56Kohm,5%,2W,AF,TP,3.9x	
....4	R836	2003-002020	R-METAL OXIDE(S);56Kohm,5%,2W,AF,TP,3.9x	
....4	R310	2003-002037	R-METAL OXIDE(S);270ohm,5%,2W,AF,TP,3.9x	
....4	R407	2003-002151	R-METAL OXIDE;18KOHM,5%,2W,AG,TP,6X16MM	
....4	RV909	2004-000869	R-METAL;3Kohm,1%,1/8W,AA,TP,1.8x3.2mm	
....4	R411	2004-000947	R-METAL;43Kohm,1%,1/4W,AA,TP,2.4x6.4mm	
....4	R024	2004-001382	R-METAL(S);13Kohm,1%,1/2W,AA,TP,2.4x6.4m	
....4	R024	2004-001382	R-METAL(S);13Kohm,1%,1/2W,AA,TP,2.4x6.4m	
....4	R024	2004-001390	R-METAL(S);1Kohm,2%,1/2W,AA,TP,2.4x6.4mm	
....4	R024	2004-001397	R-METAL(S);4.7Kohm,1%,1/2W,AA,TP,2.4x6.4	
....4	R024	2004-001402	R-METAL(S);6.8Kohm,1%,1/2W,AA,TP,2.4x6.4	
....4	R024	2004-001891	R-METAL(S);133Kohm,1%,1/2W,AA,TP,2.5x6.5	
....4	R024	2004-001891	R-METAL(S);133Kohm,1%,1/2W,AA,TP,2.5x6.5	
....4	R024	2004-001983	R-METAL(S);2.49Kohm,1%,1/2W,AA,TP,2.4x6.	
....4	RV212	2004-002187	R-METAL;619ohm,1%,1/8W,AA,TP,1.8x3.2mm	
....4	RV214	2004-002187	R-METAL;619ohm,1%,1/8W,AA,TP,1.8x3.2mm	
....4	RV216	2004-002187	R-METAL;619ohm,1%,1/8W,AA,TP,1.8x3.2mm	
....4	R024	2004-004045	R-METAL(S);390ohm,1%,1/2W,AA,TP,2.5x6.5m	
....4	R024	2004-005054	R-METAL(S);39KOHM,1%,1/2W,AA,TP,2.4X6.4M	
....4	R024	2004-005054	R-METAL(S);39KOHM,1%,1/2W,AA,TP,2.4X6.4M	
....4	R560	2008-000205	R-FUSIBLE(S);10ohm,5%,1/2W,AF,TP,2.5x6.5	
....4	R834	2008-000205	R-FUSIBLE(S);10ohm,5%,1/2W,AF,TP,2.5x6.5	
....4	R809B	2008-000206	R-FUSIBLE(S);1ohm,5%,1/2W,AF,TP,2.5x6.5m	
....4	R829	2008-000252	R-FUSIBLE(S);0.47ohm,10%,1/2W,AF,TP,2.5x	
....4	R413	2008-000253	R-FUSIBLE(S);0.47ohm,5%,1W,AF,TP,3.9x10m	
....4	R414	2008-000253	R-FUSIBLE(S);0.47ohm,5%,1W,AF,TP,3.9x10m	
....4	R825	2008-000284	R-FUSIBLE(S);0.1OHM,10%,2W,AF,TP,3.9X10M	
....4	R827	2008-000284	R-FUSIBLE(S);0.1OHM,10%,2W,AF,TP,3.9X10M	
....4	R837	2008-000290	R-FUSIBLE(S);2.4ohm,5%,2W,AF,TP,3.9x10mm	

Level	Loc.No.	Code No.	Description;Specification	Remark
....4	R303	2008-001013	R-FUSIBLE(S);1.2ohm,5%,2W,AF,TP,3.9x10mm	
....4	R304	2008-001015	R-FUSIBLE(S);1.5ohm,5%,2W,AF,TP,3.9x10mm	
....4	R561	2008-001053	R-FUSIBLE;22ohm,5%,1/2W,AF,TP,2.5x6.5mm	
....4	R828	2008-001138	R-FUSIBLE;2.4OHM,5%,1W,AF,TP,3.9X10MM	
⚠ 4	FD802S	2008-001163	R-PICO FUSIBLE;10mohm,20%,1W,AA,TP,2.3x6	
....4	R0251	2009-000026	R-METAL PLATE;0.15OHM,10%,5W,CL,TP,5X14X	
....4	R0251	2009-000027	R-METAL PLATE;0.39OHM,10%,5W,CL,TP,5X14X	
....4	R0251	2009-000027	R-METAL PLATE;0.39OHM,10%,5W,CL,TP,5X14X	
....4	C598	2201-000132	C-CERAMIC,DISC;0.1NF,10%,500V,Y5P,TP,6.5	
....4	C598	2201-000192	C-CERAMIC,DISC;0.01NF,0.25PF,500V,C0G,TP	
....4	C598	2201-000291	C-CERAMIC,DISC;1NF,10%,500V,Y5P,TP,7.5X3	
....4	C598	2201-000332	C-CERAMIC,DISC;2.2NF,20%,250V,Y5U,TP,9X4	
....4	C598	2201-000332	C-CERAMIC,DISC;2.2NF,20%,250V,Y5U,TP,9X4	
....4	C598	2201-000374	C-CERAMIC,DISC;0.22NF,5%,50V,C0G,TP,10.5	
....4	C598	2201-000389	C-CERAMIC,DISC;0.022NF,5%,50V,C0G,TP,5X3	
....4	C598	2201-000389	C-CERAMIC,DISC;0.022NF,5%,50V,C0G,TP,5X3	
....4	C598	2201-000406	C-CERAMIC,DISC;0.27NF,10%,2KV,Y5P,TP,6.3	
....4	C598	2201-000556	C-CERAMIC,DISC;0.47NF,10%,500V,Y5P,TP,5.	
....4	C598	2201-000556	C-CERAMIC,DISC;0.47NF,10%,500V,Y5P,TP,5.	
....4	C598	2201-000556	C-CERAMIC,DISC;0.47NF,10%,500V,Y5P,TP,5.	
....4	C598	2201-000556	C-CERAMIC,DISC;0.47NF,10%,500V,Y5P,TP,5.	
....4	C598	2201-000556	C-CERAMIC,DISC;0.47NF,10%,500V,Y5P,TP,5.	
....4	C598	2201-000599	C-CERAMIC,DISC;0.56NF,10%,500V,Y5P,TP,5.	
....4	C598	2201-000599	C-CERAMIC,DISC;0.56NF,10%,500V,Y5P,TP,5.	
....4	C689	2202-000121	C-CERAMIC,MLC-AXIAL;100pF,10%,50V,Y5P,TP	
....4	C689	2202-000121	C-CERAMIC,MLC-AXIAL;100pF,10%,50V,Y5P,TP	
....4	C689	2202-000216	C-CERAMIC,MLC-AXIAL;0.027NF,5%,50V,SL,TP	
....4	C689	2202-000216	C-CERAMIC,MLC-AXIAL;0.027NF,5%,50V,SL,TP	
....4	C689	2202-000231	C-CERAMIC,MLC-AXIAL;0.33NF,10%,50V,Y5P,T	
....4	C689	2202-000231	C-CERAMIC,MLC-AXIAL;0.33NF,10%,50V,Y5P,T	
....4	C689	2202-000231	C-CERAMIC,MLC-AXIAL;0.33NF,10%,50V,Y5P,T	
....4	C689	2202-000231	C-CERAMIC,MLC-AXIAL;0.33NF,10%,50V,Y5P,T	
....4	C689	2202-000231	C-CERAMIC,MLC-AXIAL;0.33NF,10%,50V,Y5P,T	
....4	C689	2202-000231	C-CERAMIC,MLC-AXIAL;0.33NF,10%,50V,Y5P,T	
....4	C689	2202-000231	C-CERAMIC,MLC-AXIAL;0.33NF,10%,50V,Y5P,T	
....4	C689	2202-000231	C-CERAMIC,MLC-AXIAL;0.33NF,10%,50V,Y5P,T	
....4	C689	2202-000231	C-CERAMIC,MLC-AXIAL;0.33NF,10%,50V,Y5P,T	
....4	C689	2202-000243	C-CERAMIC,MLC-AXIAL;33pF,5%,50V,SL,TP,3.	
....4	C689	2202-000243	C-CERAMIC,MLC-AXIAL;33pF,5%,50V,SL,TP,3.	
....4	C689	2202-000243	C-CERAMIC,MLC-AXIAL;33pF,5%,50V,SL,TP,3.	
....4	C689	2202-000796	C-CERAMIC,MLC-AXIAL;1NF,10%,50V,Y5P,TP,3	
....4	C689	2202-000796	C-CERAMIC,MLC-AXIAL;1NF,10%,50V,Y5P,TP,3	
....4	C689	2202-000796	C-CERAMIC,MLC-AXIAL;1NF,10%,50V,Y5P,TP,3	
....4	C689	2202-000796	C-CERAMIC,MLC-AXIAL;1NF,10%,50V,Y5P,TP,3	
....4	C689	2202-000796	C-CERAMIC,MLC-AXIAL;1NF,10%,50V,Y5P,TP,3	
....4	C689	2202-000796	C-CERAMIC,MLC-AXIAL;1NF,10%,50V,Y5P,TP,3	
....4	C689	2202-000796	C-CERAMIC,MLC-AXIAL;1NF,10%,50V,Y5P,TP,3	
....4	C689	2202-000796	C-CERAMIC,MLC-AXIAL;1NF,10%,50V,Y5P,TP,3	
....4	C689	2202-000796	C-CERAMIC,MLC-AXIAL;1NF,10%,50V,Y5P,TP,3	
....4	C689	2202-000796	C-CERAMIC,MLC-AXIAL;1NF,10%,50V,Y5P,TP,3	
....4	C689	2202-000796	C-CERAMIC,MLC-AXIAL;1NF,10%,50V,Y5P,TP,3	
....4	C689	2202-000796	C-CERAMIC,MLC-AXIAL;1NF,10%,50V,Y5P,TP,3	
....4	C689	2202-000796	C-CERAMIC,MLC-AXIAL;1NF,10%,50V,Y5P,TP,3	
....4	C689	2202-000796	C-CERAMIC,MLC-AXIAL;1NF,10%,50V,Y5P,TP,3	
....4	C689	2202-000806	C-CERAMIC,MLC-AXIAL;220pF,10%,50V,Y5P,TP	
....4	C689	2202-000806	C-CERAMIC,MLC-AXIAL;220pF,10%,50V,Y5P,TP	
....4	C689	2202-000806	C-CERAMIC,MLC-AXIAL;220pF,10%,50V,Y5P,TP	
....4	C689	2202-000863	C-CERAMIC,MLC-AXIAL;560pF,10%,50V,Y5P,TP	
....4	C689	2202-002009	C-CERAMIC,MLC-AXIAL;100NF,+80-20%,50V,Y5	
....4	C689	2202-002037	C-CERAMIC,MLC-AXIAL;100nF,80-20%,50V,Y5V	
....4	C689	2202-002037	C-CERAMIC,MLC-AXIAL;100nF,80-20%,50V,Y5V	
....4	C689	2202-002037	C-CERAMIC,MLC-AXIAL;100nF,80-20%,50V,Y5V	
....4	C689	2202-002037	C-CERAMIC,MLC-AXIAL;100nF,80-20%,50V,Y5V	
....4	C2560	2301-000192	C-FILM,LEAD-PEF;1nF,5%,50V,TP,5.3x10mm,5	
....4	C2560	2301-000224	C-FILM,LEAD-PEF;22nF,5%,50V,TP,7.4x3.9x1	
....4	C2560	2301-000224	C-FILM,LEAD-PEF;22nF,5%,50V,TP,7.4x3.9x1	
....4	C2560	2301-000342	C-FILM,LEAD-PEF;2.2nF,5%,50V,TP,7.4x3.9x	
....4	C2560	2301-000356	C-FILM,LEAD-PEF;47nF,5%,50V,TP,7.5x4.0x6	
....4	C2560	2301-000383	C-FILM,LEAD-PEF;10nF,5%,50V,TP,6x7x3.2mm	
....4	C2560	2301-000383	C-FILM,LEAD-PEF;10nF,5%,50V,TP,6x7x3.2mm	
....4	C2560	2301-000383	C-FILM,LEAD-PEF;10nF,5%,50V,TP,6x7x3.2mm	
....4	C2560	2301-000383	C-FILM,LEAD-PEF;10nF,5%,50V,TP,6x7x3.2mm	
⚠ 4	CR404S	2301-001065	C-FILM,LEAD-PPF;47nF,5%,630V,TP,19x15.5x	
....4	C807	2301-001342	C-FILM,LEAD-PPF;1.5nF,5%,800V,TP,15x6.5x	
....4	C2560	2305-000285	C-FILM,LEAD-PEF;220NF,5%,100V,TP,10.5X5.	
....4	C2560	2305-000289	C-FILM,LEAD-PEF;220nF,5%,63V,TP,-,5mm	

Level	Loc.No.	Code No.	Description;Specification	Remark
....4	C2560	2305-000289	C-FILM,LEAD-PEF;220nF,5%,63V,TP,-,5mm	
....4	C2560	2305-000382	C-FILM,LEAD-PEF;4.7nF,5%,400V,TP,-,5mm	
....4	C2560	2305-000411	C-FILM,LEAD-PEF;470nF,5%,50V,TP,7.3x4.8x	
....4	C2560	2305-000411	C-FILM,LEAD-PEF;470nF,5%,50V,TP,7.3x4.8x	
....4	C2560	2305-000411	C-FILM,LEAD-PEF;470nF,5%,50V,TP,7.3x4.8x	
....4	C2560	2305-000411	C-FILM,LEAD-PEF;470nF,5%,50V,TP,7.3x4.8x	
....4	C2560	2305-000412	C-FILM,LEAD-PEF;470nF,5%,63V,TP,-,5mm	
....4	C2560	2305-000412	C-FILM,LEAD-PEF;470nF,5%,63V,TP,-,5mm	
....4	C2560	2305-000665	C-FILM,LEAD-PEF;100nF,5%,63V,TP,7.5x4.0x	
....4	C2560	2305-000665	C-FILM,LEAD-PEF;100nF,5%,63V,TP,7.5x4.0x	
....4	C2560	2305-000665	C-FILM,LEAD-PEF;100nF,5%,63V,TP,7.5x4.0x	
....4	C2560	2305-000665	C-FILM,LEAD-PEF;100nF,5%,63V,TP,7.5x4.0x	
....4	C2560	2305-000665	C-FILM,LEAD-PEF;100nF,5%,63V,TP,7.5x4.0x	
....4	C2560	2305-000665	C-FILM,LEAD-PEF;100nF,5%,63V,TP,7.5x4.0x	
....4	C2560	2305-000665	C-FILM,LEAD-PEF;100nF,5%,63V,TP,7.5x4.0x	
....4	C2560	2305-000665	C-FILM,LEAD-PEF;100nF,5%,63V,TP,7.5x4.0x	
....4	C2560	2305-001037	C-FILM,LEAD-PEF;330nF,5%,63V,TP,7.5x5.5x	
....4	C2560	2305-001037	C-FILM,LEAD-PEF;330nF,5%,63V,TP,7.5x5.5x	
....4	C2560	2305-001037	C-FILM,LEAD-PEF;330nF,5%,63V,TP,7.5x5.5x	
....4	C112	2306-000122	C-FILM,LEAD-PPF;100nF,5%,50V,TP,7.3x4.0x	
....4	CV101	2306-000122	C-FILM,LEAD-PPF;100nF,5%,50V,TP,7.3x4.0x	
....4	C701	2401-000025	C-AL;100uF,20%,16V,GP,TP,6.3x11,5	
....4	C701	2401-000302	C-AL;100uF,20%,25V,GP,TP,6.3x11,5	
....4	C701	2401-000360	C-AL;100uF,20%,50V,GP,TP,8x11.5,5	
....4	C701	2401-000365	C-AL;100uF,20%,50V,WT,TP,10x12.5mm,	
....4	C701	2401-000493	C-AL;10uF,20%,50V,LZ,TP,5x11mm,5mm	
....4	C701	2401-000493	C-AL;10uF,20%,50V,LZ,TP,5x11mm,5mm	
....4	C701	2401-000603	C-AL;1UF,20%,50V,GP,TP,5X11,2	
....4	C701	2401-000603	C-AL;1UF,20%,50V,GP,TP,5X11,2	
....4	C701	2401-000832	C-AL;220uF,20%,25V,GP,TP,8x11.5,5	
....4	C701	2401-000832	C-AL;220uF,20%,25V,GP,TP,8x11.5,5	
....4	C701	2401-001026	C-AL;3.3UF,20%,50V,GP,TP,5X11,5	
....4	C701	2401-001397	C-AL;470uF,20%,25V,GP,TP,10x16,5	
....4	C701	2401-001513	C-AL;47uF,20%,16V,WT,TP,5x11,5	
....4	C701	2401-001527	C-AL;47uF,20%,250V,HR,TP,13x25mm,5m	
....4	C701	2401-001914	C-AL;1uF,20%,50V,BP,TP,5x11,5	
....4	C701	2401-001914	C-AL;1uF,20%,50V,BP,TP,5x11,5	
....4	C701	2401-001989	C-AL;4.7uF,20%,50V,BP,TP,5x11,5	
....4	C701	2401-001989	C-AL;4.7uF,20%,50V,BP,TP,5x11,5	
....4	C701	2401-001989	C-AL;4.7uF,20%,50V,BP,TP,5x11,5	
....4	C701	2401-001989	C-AL;4.7uF,20%,50V,BP,TP,5x11,5	
....4	C701	2401-001989	C-AL;4.7uF,20%,50V,BP,TP,5x11,5	
....4	C701	2401-001998	C-AL;1000uF,20%,25V,GP,TP,10x20,5mm	
....4	C701	2401-002075	C-AL;4.7uF,20%,50V,GP,TP,5x11,5	
....4	C701	2401-002075	C-AL;4.7uF,20%,50V,GP,TP,5x11,5	
....4	C701	2401-002075	C-AL;4.7uF,20%,50V,GP,TP,5x11,5	
....4	C701	2401-002144	C-AL;47uF,20%,16V,GP,TP,5x11,5	
....4	C701	2401-002144	C-AL;47uF,20%,16V,GP,TP,5x11,5	
....4	C701	2401-002215	C-AL;2200uF,20%,25V,WT,TP,13x25,5	
....4	C701	2401-002215	C-AL;2200uF,20%,25V,WT,TP,13x25,5	
....4	C701	2401-002215	C-AL;2200uF,20%,25V,WT,TP,13x25,5	
....4	C701	2401-002268	C-AL;2.2uF,20%,250V,LZ,TP,8X11,5	
....4	C701	2401-002288	C-AL;470uF,20%,25V,WT,TP,10x20,5	
....4	C701	2401-002463	C-AL;470uF,20%,16V,GP,TP,8x11.5,5	
....4	C701	2401-002594	C-AL;220uF,20%,16V,GP,TP,8x11.5,5	
....4	C701	2401-002597	C-AL;220uF,20%,35V,GP,TP,10x12.5,5	
....4	C701	2401-002619	C-AL;47uF,20%,25V,GP,TP,5x11,5	
....4	C701	2401-002619	C-AL;47uF,20%,25V,GP,TP,5x11,5	
....4	C701	2401-002619	C-AL;47uF,20%,25V,GP,TP,5x11,5	
....4	C701	2401-002619	C-AL;47uF,20%,25V,GP,TP,5x11,5	
....4	C701	2401-002619	C-AL;47uF,20%,25V,GP,TP,5x11,5	
....4	C701	2401-002619	C-AL;47uF,20%,25V,GP,TP,5x11,5	
....4	C701	2401-002619	C-AL;47uF,20%,25V,GP,TP,5x11,5	
....4	C701	2401-002619	C-AL;47uF,20%,25V,GP,TP,5x11,5	
....4	C701	2401-002619	C-AL;47uF,20%,25V,GP,TP,5x11,5	
....4	C701	2401-002619	C-AL;47uF,20%,25V,GP,TP,5x11,5	
....4	C701	2401-002619	C-AL;47uF,20%,25V,GP,TP,5x11,5	
....4	C701	2401-003553	C-AL;100uF,20%,200V,LZ,TP,16x25,7.5	
....4	C701	2401-003578	C-AL;1000uF,20%,10V,GP,TP,8x20mm,5	
....4	C701	2401-003578	C-AL;1000uF,20%,10V,GP,TP,8x20mm,5	
....4	L106	2701-000114	INDUCTOR-AXIAL;10UH,10%,2534	
....4	LV101	2701-000114	INDUCTOR-AXIAL;10UH,10%,2534	
....4	LV252A	2701-000114	INDUCTOR-AXIAL;10UH,10%,2534	
....4	LV252B	2701-000114	INDUCTOR-AXIAL;10UH,10%,2534	

Level	Loc.No.	Code No.	Description;Specification	Remark
....4	RV101	2701-000114	INDUCTOR-AXIAL;10UH,10%,2534	
....4	RV102	2701-000114	INDUCTOR-AXIAL;10UH,10%,2534	
....4	LV204	2701-000115	INDUCTOR-AXIAL;10UH,10%,3070	
....4	LV601	2701-000115	INDUCTOR-AXIAL;10UH,10%,3070	
....4	L284	2701-000116	INDUCTOR-AXIAL;10UH,10%,4298	
....4	LV904	2701-000116	INDUCTOR-AXIAL;10UH,10%,4298	
....4	L424	2701-000142	INDUCTOR-AXIAL;1UH,10%,2534	
....4	L825	2701-000142	INDUCTOR-AXIAL;1UH,10%,2534	
....4	LV701	2701-000142	INDUCTOR-AXIAL;1UH,10%,2534	
....4	LV702	2701-000142	INDUCTOR-AXIAL;1UH,10%,2534	
....4	LV703	2701-000142	INDUCTOR-AXIAL;1UH,10%,2534	
....4	LV201	2701-000143	INDUCTOR-AXIAL;1UH,10%,3070	
....4	LV202	2701-000143	INDUCTOR-AXIAL;1UH,10%,3070	
....4	LV203	2701-000143	INDUCTOR-AXIAL;1UH,10%,3070	
....4	LV901	2701-000143	INDUCTOR-AXIAL;1UH,10%,3070	
....4	LV905	2701-000158	INDUCTOR-AXIAL;22UH,10%,2534	
....4	LV205	2701-000159	INDUCTOR-AXIAL;22UH,10%,4298	
....4	L607	2701-000177	INDUCTOR-AXIAL;33UH,10%,2534	
....4	L608	2701-000177	INDUCTOR-AXIAL;33UH,10%,2534	
....4	L705	2701-000177	INDUCTOR-AXIAL;33UH,10%,2534	
....4	L706	2701-000177	INDUCTOR-AXIAL;33UH,10%,2534	
....4	LV206	2701-000184	INDUCTOR-AXIAL;4.7UH,10%,2534	
....4	LV102	2701-000189	INDUCTOR-AXIAL;0.47UH,10%,2534	
....4	L303B	2701-001040	INDUCTOR-AXIAL;10UH,10%,4514	
....4	LV253	2702-001094	INDUCTOR-RADIAL;10uH,10%,4x6mm	
....4	F101	2901-000297	FILTER-EMI ON BOARD;-,3A,-,-,3.5x5,TP,-	
....4	L2514	3301-000287	BEAD-AXIAL;,3.5x1.0x6.0mm,3000mA,TP,,,50	
....4	L2514	3301-000287	BEAD-AXIAL;,3.5x1.0x6.0mm,3000mA,TP,,,50	
....4	L2514	3301-000287	BEAD-AXIAL;,3.5x1.0x6.0mm,3000mA,TP,,,50	
....4	L2514	3301-000287	BEAD-AXIAL;,3.5x1.0x6.0mm,3000mA,TP,,,50	
....4	L2514	3301-000287	BEAD-AXIAL;,3.5x1.0x6.0mm,3000mA,TP,,,50	
....4	L2514	3301-000287	BEAD-AXIAL;,3.5x1.0x6.0mm,3000mA,TP,,,50	
....4	L2514	3301-000287	BEAD-AXIAL;,3.5x1.0x6.0mm,3000mA,TP,,,50	
....4	L2514	3301-000287	BEAD-AXIAL;,3.5x1.0x6.0mm,3000mA,TP,,,50	
....4	L2514	3301-000287	BEAD-AXIAL;,3.5x1.0x6.0mm,3000mA,TP,,,50	
....4	L2514	3301-000287	BEAD-AXIAL;,3.5x1.0x6.0mm,3000mA,TP,,,50	
....4	FD801A	3601-001228	FUSE-AXIAL LEAD;125V,10A,FAST-ACTING,EPO	
....4	F801A	3602-000114	FUSE-HOLDER;-,-,30mohm	
....4	F801B	3602-000114	FUSE-HOLDER;-,-,30mohm	
....4	CN906	3711-002642	CONNECTOR-HEADER;BOX,3P,1R,2.5mm,STRAIGH	
....4	CN906	3711-002646	CONNECTOR-HEADER;BOX,7P,1R,2.5mm,STRAIGH	
....4	CN906	3711-002646	CONNECTOR-HEADER;BOX,7P,1R,2.5mm,STRAIGH	
....4	CN906	3711-002647	CONNECTOR-HEADER;BOX,8P,1R,2.5mm,STRAIGH	
....4	EL800	6042-000001	EYELET;ID2.2,OD2.7,L3.1,NI+SN,BSP3-1/2H	S.N.A
....4	EL801	6042-000001	EYELET;ID2.2,OD2.7,L3.1,NI+SN,BSP3-1/2H	S.N.A
....4	EL802	6042-000001	EYELET;ID2.2,OD2.7,L3.1,NI+SN,BSP3-1/2H	S.N.A
....4	EL803	6042-000001	EYELET;ID2.2,OD2.7,L3.1,NI+SN,BSP3-1/2H	S.N.A
....4	EL804	6042-000001	EYELET;ID2.2,OD2.7,L3.1,NI+SN,BSP3-1/2H	S.N.A
....4	EL805	6042-000001	EYELET;ID2.2,OD2.7,L3.1,NI+SN,BSP3-1/2H	S.N.A
....4	EL806	6042-000001	EYELET;ID2.2,OD2.7,L3.1,NI+SN,BSP3-1/2H	S.N.A
....4	EL807	6042-000001	EYELET;ID2.2,OD2.7,L3.1,NI+SN,BSP3-1/2H	S.N.A
....4	EL808	6042-000001	EYELET;ID2.2,OD2.7,L3.1,NI+SN,BSP3-1/2H	S.N.A
....4	EL809	6042-000001	EYELET;ID2.2,OD2.7,L3.1,NI+SN,BSP3-1/2H	S.N.A
....4	EL811	6042-000001	EYELET;ID2.2,OD2.7,L3.1,NI+SN,BSP3-1/2H	S.N.A
....4	EL812	6042-000001	EYELET;ID2.2,OD2.7,L3.1,NI+SN,BSP3-1/2H	S.N.A
....4	EL842	6042-000001	EYELET;ID2.2,OD2.7,L3.1,NI+SN,BSP3-1/2H	S.N.A
....4	EL857	6042-000001	EYELET;ID2.2,OD2.7,L3.1,NI+SN,BSP3-1/2H	S.N.A
....4	EL868	6042-000001	EYELET;ID2.2,OD2.7,L3.1,NI+SN,BSP3-1/2H	S.N.A
....4	EY600	6042-000002	EYELET;ID1.5,OD2,L2.8,NI+SN,BSP3-1/2H	S.N.A
....4	EY601	6042-000002	EYELET;ID1.5,OD2,L2.8,NI+SN,BSP3-1/2H	S.N.A
....4	EY602	6042-000002	EYELET;ID1.5,OD2,L2.8,NI+SN,BSP3-1/2H	S.N.A
....4	EY603	6042-000002	EYELET;ID1.5,OD2,L2.8,NI+SN,BSP3-1/2H	S.N.A
....4	EY800	6042-000002	EYELET;ID1.5,OD2,L2.8,NI+SN,BSP3-1/2H	S.N.A
....4	EY801	6042-000002	EYELET;ID1.5,OD2,L2.8,NI+SN,BSP3-1/2H	S.N.A
....4	EY802	6042-000002	EYELET;ID1.5,OD2,L2.8,NI+SN,BSP3-1/2H	S.N.A
....4	EY803	6042-000002	EYELET;ID1.5,OD2,L2.8,NI+SN,BSP3-1/2H	S.N.A
....4	EY804	6042-000002	EYELET;ID1.5,OD2,L2.8,NI+SN,BSP3-1/2H	S.N.A
....4	EY805	6042-000002	EYELET;ID1.5,OD2,L2.8,NI+SN,BSP3-1/2H	S.N.A
....4	EY806	6042-000002	EYELET;ID1.5,OD2,L2.8,NI+SN,BSP3-1/2H	S.N.A
....4	EY807	6042-000002	EYELET;ID1.5,OD2,L2.8,NI+SN,BSP3-1/2H	S.N.A
....4	EY808	6042-000002	EYELET;ID1.5,OD2,L2.8,NI+SN,BSP3-1/2H	S.N.A
....4	EY809	6042-000002	EYELET;ID1.5,OD2,L2.8,NI+SN,BSP3-1/2H	S.N.A
....4	EY810	6042-000002	EYELET;ID1.5,OD2,L2.8,NI+SN,BSP3-1/2H	S.N.A
....4	EY811	6042-000002	EYELET;ID1.5,OD2,L2.8,NI+SN,BSP3-1/2H	S.N.A
....4	EY812	6042-000002	EYELET;ID1.5,OD2,L2.8,NI+SN,BSP3-1/2H	S.N.A
....4	EY813	6042-000002	EYELET;ID1.5,OD2,L2.8,NI+SN,BSP3-1/2H	S.N.A

Level	Loc.No.	Code No.	Description;Specification	Remark
....4	EY814	6042-000002	EYELET;ID1.5,OD2,L2.8,NI+SN,BSP3-1/2H	S.N.A
....4	EY815	6042-000002	EYELET;ID1.5,OD2,L2.8,NI+SN,BSP3-1/2H	S.N.A
....4	EY816	6042-000002	EYELET;ID1.5,OD2,L2.8,NI+SN,BSP3-1/2H	S.N.A
....4	EY817	6042-000002	EYELET;ID1.5,OD2,L2.8,NI+SN,BSP3-1/2H	S.N.A
....4	EY818	6042-000002	EYELET;ID1.5,OD2,L2.8,NI+SN,BSP3-1/2H	S.N.A
....4	EY819	6042-000002	EYELET;ID1.5,OD2,L2.8,NI+SN,BSP3-1/2H	S.N.A
....4	EY821	6042-000002	EYELET;ID1.5,OD2,L2.8,NI+SN,BSP3-1/2H	S.N.A
....4	EY822	6042-000002	EYELET;ID1.5,OD2,L2.8,NI+SN,BSP3-1/2H	S.N.A
....4	EY823	6042-000002	EYELET;ID1.5,OD2,L2.8,NI+SN,BSP3-1/2H	S.N.A
....4	EY824	6042-000002	EYELET;ID1.5,OD2,L2.8,NI+SN,BSP3-1/2H	S.N.A
....4	EY826	6042-000002	EYELET;ID1.5,OD2,L2.8,NI+SN,BSP3-1/2H	S.N.A
....4	EY827	6042-000002	EYELET;ID1.5,OD2,L2.8,NI+SN,BSP3-1/2H	S.N.A
....4	EY828	6042-000002	EYELET;ID1.5,OD2,L2.8,NI+SN,BSP3-1/2H	S.N.A
....4	EY829	6042-000002	EYELET;ID1.5,OD2,L2.8,NI+SN,BSP3-1/2H	S.N.A
....4	EY830	6042-000002	EYELET;ID1.5,OD2,L2.8,NI+SN,BSP3-1/2H	S.N.A
....4	EY831	6042-000002	EYELET;ID1.5,OD2,L2.8,NI+SN,BSP3-1/2H	S.N.A
....4	EY832	6042-000002	EYELET;ID1.5,OD2,L2.8,NI+SN,BSP3-1/2H	S.N.A
....4	EY833	6042-000002	EYELET;ID1.5,OD2,L2.8,NI+SN,BSP3-1/2H	S.N.A
....4	EY834	6042-000002	EYELET;ID1.5,OD2,L2.8,NI+SN,BSP3-1/2H	S.N.A
....4	EY835	6042-000002	EYELET;ID1.5,OD2,L2.8,NI+SN,BSP3-1/2H	S.N.A
....4	EY836	6042-000002	EYELET;ID1.5,OD2,L2.8,NI+SN,BSP3-1/2H	S.N.A
....4	EY837	6042-000002	EYELET;ID1.5,OD2,L2.8,NI+SN,BSP3-1/2H	S.N.A
....4	EY838	6042-000002	EYELET;ID1.5,OD2,L2.8,NI+SN,BSP3-1/2H	S.N.A
....4	EY839	6042-000002	EYELET;ID1.5,OD2,L2.8,NI+SN,BSP3-1/2H	S.N.A
....4	EY840	6042-000002	EYELET;ID1.5,OD2,L2.8,NI+SN,BSP3-1/2H	S.N.A
....4	EY841	6042-000002	EYELET;ID1.5,OD2,L2.8,NI+SN,BSP3-1/2H	S.N.A
....4	EY842	6042-000002	EYELET;ID1.5,OD2,L2.8,NI+SN,BSP3-1/2H	S.N.A
....4	EY843	6042-000002	EYELET;ID1.5,OD2,L2.8,NI+SN,BSP3-1/2H	S.N.A
....4	EY844	6042-000002	EYELET;ID1.5,OD2,L2.8,NI+SN,BSP3-1/2H	S.N.A
....4	EY845	6042-000002	EYELET;ID1.5,OD2,L2.8,NI+SN,BSP3-1/2H	S.N.A
....4	EY846	6042-000002	EYELET;ID1.5,OD2,L2.8,NI+SN,BSP3-1/2H	S.N.A
....4	EY847	6042-000002	EYELET;ID1.5,OD2,L2.8,NI+SN,BSP3-1/2H	S.N.A
....4	EY848	6042-000002	EYELET;ID1.5,OD2,L2.8,NI+SN,BSP3-1/2H	S.N.A
....4	EY849	6042-000002	EYELET;ID1.5,OD2,L2.8,NI+SN,BSP3-1/2H	S.N.A
....4	EY850	6042-000002	EYELET;ID1.5,OD2,L2.8,NI+SN,BSP3-1/2H	S.N.A
....4	EY851	6042-000002	EYELET;ID1.5,OD2,L2.8,NI+SN,BSP3-1/2H	S.N.A
....4	EY852	6042-000002	EYELET;ID1.5,OD2,L2.8,NI+SN,BSP3-1/2H	S.N.A
....4	EY853	6042-000002	EYELET;ID1.5,OD2,L2.8,NI+SN,BSP3-1/2H	S.N.A
....4	EY854	6042-000002	EYELET;ID1.5,OD2,L2.8,NI+SN,BSP3-1/2H	S.N.A
....4	EY855	6042-000002	EYELET;ID1.5,OD2,L2.8,NI+SN,BSP3-1/2H	S.N.A
....4	EY856	6042-000002	EYELET;ID1.5,OD2,L2.8,NI+SN,BSP3-1/2H	S.N.A
....4	EY857	6042-000002	EYELET;ID1.5,OD2,L2.8,NI+SN,BSP3-1/2H	S.N.A
....4	EY858	6042-000002	EYELET;ID1.5,OD2,L2.8,NI+SN,BSP3-1/2H	S.N.A
....4	EY859	6042-000002	EYELET;ID1.5,OD2,L2.8,NI+SN,BSP3-1/2H	S.N.A
....4	EY862	6042-000002	EYELET;ID1.5,OD2,L2.8,NI+SN,BSP3-1/2H	S.N.A
....4	EY863	6042-000002	EYELET;ID1.5,OD2,L2.8,NI+SN,BSP3-1/2H	S.N.A
....4	EY864	6042-000002	EYELET;ID1.5,OD2,L2.8,NI+SN,BSP3-1/2H	S.N.A
....4	EY865	6042-000002	EYELET;ID1.5,OD2,L2.8,NI+SN,BSP3-1/2H	S.N.A
....4	EY866	6042-000002	EYELET;ID1.5,OD2,L2.8,NI+SN,BSP3-1/2H	S.N.A
....4	EY867	6042-000002	EYELET;ID1.5,OD2,L2.8,NI+SN,BSP3-1/2H	S.N.A
....4	EY869	6042-000002	EYELET;ID1.5,OD2,L2.8,NI+SN,BSP3-1/2H	S.N.A
....4	EY870	6042-000002	EYELET;ID1.5,OD2,L2.8,NI+SN,BSP3-1/2H	S.N.A
....4	EY871	6042-000002	EYELET;ID1.5,OD2,L2.8,NI+SN,BSP3-1/2H	S.N.A
....4	EY872	6042-000002	EYELET;ID1.5,OD2,L2.8,NI+SN,BSP3-1/2H	S.N.A
....4	EY873	6042-000002	EYELET;ID1.5,OD2,L2.8,NI+SN,BSP3-1/2H	S.N.A
....4	EY874	6042-000002	EYELET;ID1.5,OD2,L2.8,NI+SN,BSP3-1/2H	S.N.A
....4	EY875	6042-000002	EYELET;ID1.5,OD2,L2.8,NI+SN,BSP3-1/2H	S.N.A
....4	EY876	6042-000002	EYELET;ID1.5,OD2,L2.8,NI+SN,BSP3-1/2H	S.N.A
....4	EY877	6042-000002	EYELET;ID1.5,OD2,L2.8,NI+SN,BSP3-1/2H	S.N.A
....4	EY878	6042-000002	EYELET;ID1.5,OD2,L2.8,NI+SN,BSP3-1/2H	S.N.A
....4	EY879	6042-000002	EYELET;ID1.5,OD2,L2.8,NI+SN,BSP3-1/2H	S.N.A
....4	EY880	6042-000002	EYELET;ID1.5,OD2,L2.8,NI+SN,BSP3-1/2H	S.N.A
....4	EY881	6042-000002	EYELET;ID1.5,OD2,L2.8,NI+SN,BSP3-1/2H	S.N.A
....4	EY882	6042-000002	EYELET;ID1.5,OD2,L2.8,NI+SN,BSP3-1/2H	S.N.A
....4	EY883	6042-000002	EYELET;ID1.5,OD2,L2.8,NI+SN,BSP3-1/2H	S.N.A
....4	FT401	AA37-00001A	CONNECTOR-FBT FIX PIN;JM-3500,CPTTV,0.36	
....4	FT402	AA37-00001A	CONNECTOR-FBT FIX PIN;JM-3500,CPTTV,0.36	
....4	GT403	AA60-40014A	PIN-GT,ASSY;AUTO	S.N.A
....4	GT404	AA60-40014A	PIN-GT,ASSY;AUTO	S.N.A
....4	GT406	AA60-40014A	PIN-GT,ASSY;AUTO	S.N.A
....4	GT801	AA60-40014A	PIN-GT,ASSY;AUTO	S.N.A
....4	GT802	AA60-40014A	PIN-GT,ASSY;AUTO	S.N.A
....4	GT803	AA60-40014A	PIN-GT,ASSY;AUTO	S.N.A
....4	GT804	AA60-40014A	PIN-GT,ASSY;AUTO	S.N.A
....4	GT805	AA60-40014A	PIN-GT,ASSY;AUTO	S.N.A
....4	GT806	AA60-40014A	PIN-GT,ASSY;AUTO	S.N.A
....4	GTT01	AA60-40014A	PIN-GT,ASSY;AUTO	S.N.A

Level	Loc.No.	Code No.	Description;Specification	Remark
....4	GTT02	AA60-40014A	PIN-GT,ASSY;AUTO	S.N.A
....4	GTT04	AA60-40014A	PIN-GT,ASSY;AUTO	S.N.A
....4	GTT06	AA60-40014A	PIN-GT,ASSY;AUTO	S.N.A
....4	LV704	2701-000168	INDUCTOR-AXIAL;3.3UH,5%,2534	
....4	LV705	2701-000168	INDUCTOR-AXIAL;3.3UH,5%,2534	
....4	T0087	1203-000293	IC-POSI.FIXED REG.;7808,TO-220,3P,-,PLAS	
....4	R125	2001-000527	R-CARBON;22OHM,5%,1/8W,AA,TP,1.8X3.2MM	
....4	R075	2001-001107	R-CARBON(S);220ohm,5%,1/2W,AA,TP,2.4x6.4	
....4	DZ016	0403-000510	DIODE-ZENER;MTZJ6.2B,5.96-6.27V,500MW,DO	
....4	DZ016	0403-000716	DIODE-ZENER;MTZJ4.7B,4.59-4.77V,500MW,DO	
....4	R075	2001-001050	R-CARBON(S);1.5KOHM,5%,1/2W,AA,TP,2.4X6.	
....4	R075	2001-001186	R-CARBON(S);75KOHM,5%,1/2W,AA,TP,2.4X6.4	
....4	R075	2001-001195	R-CARBON(S);82OHM,5%,1/2W,AA,TP,2.4X6.4M	
....4	R024	2004-001893	R-METAL(S);22Kohm,1%,1/2W,AA,TP,2.5x6.5m	
....4	R024	2004-005051	R-METAL(S);2.2KOHM,1%,1/2W,AA,TP,2.4X6.4	
....4	C598	2201-000558	C-CERAMIC,DISC;0.47NF,10%,50V,Y5P,TP,5X3	
....4	CV223	2301-001211	C-FILM,LEAD-PPF;22nF,5%,400V,TP,20x7x14,	
....4	C2560	2305-000154	C-FILM,LEAD-PEF;100nF,5%,400V,TP,21.5x6.	
....4	C414	2306-000131	C-FILM,LEAD-PPF;150nF,5%,250V,TP,19x16x7	
....4	0	AA41-01024D	PCB MAIN;CT-29K10G,1,D,FR-1,245*330*1.6,	S.N.A
....4	CN906	3711-002643	CONNECTOR-HEADER;BOX,4P,1R,2.5mm,STRAIGH	
....4	CN906	3711-002644	CONNECTOR-HEADER;BOX,5P,1R,2.5mm,STRAIGH	
....4	RV206	2004-000253	R-METAL;11Kohm,1%,1/8W,AA,TP,1.8x3.2mm	
....4	R418	2008-000251	R-FUSIBLE(S);0.27ohm,5%,2W,AF,TP,3.9x10m	
....4	R898	2008-000266	R-FUSIBLE(S);1ohm,5%,2W,AF,TP,3.9x10mm	
...3	IC504	BH99-00007T	ASSY HEAT/SINK;BH62-00007A,SCREW,TDA2030	S.N.A
....4	H/S	0205-001154	OIL-SILICON;G746,-,-	S.N.A
....4	DU410	1201-000010	IC-OP AMP;2030,PENTAWATT,5P,-,SINGLE,-,C	
....4	T0081	6003-000334	SCREW-TAPTITE;RH,+,2S,M3,L6,ZPC(YEL),SWR	S.N.A
....4	H/S	BH62-00007A	HEAT SINK-TR;-,T1.0,L20*H30,CDA	S.N.A
...3	P803T	1404-001154	THERMISTOR-PTC;4.5OHM,+30%/-20%,220V,270	
...3	C701	2401-003031	C-AL;470uF,20%,450V,GP,BK,35x45mm,1	
...3	T0616	AA26-00235A	TRANS FBT;FUH29M002,TXP3235,3,56mH,4277,	
...3	T0245	AA39-20015D	LEAD CONNECTOR-ASSY;,3(2)P,300,67096-003	
⚠...3	PC801S	0604-001032	PHOTO-COUPLER;TR,170-260%,300mW,DIP-4,ST	
...3	C406	2301-001420	C-FILM,LEAD-PPF;1200nF,5%,400V,BK,31x16.	
...3	L408	AA27-00067A	COIL CHOKE;-,240uH,YL9N 12x20 C:6.0,0.12	
⚠...3	CR402S	2306-000330	C-FILM,LEAD-PPF;7.7NF,3%,1.6KV,BK,28.5X1	
...3	L405	AA27-00057A	COIL CHOKE;-,10mH,YL-9N 15x27.5 C:9.5,0.	
...3	T0568	AA39-30007B	CBF IF;-,T,150mm,1365#26	
...3	CISS	0401-000005	DIODE-SWITCHING;1N4148,75V,150MA,DO-35,T	
...3	T0296	AA27-00074A	COIL LINEARITY;-,45UH,DR14X15,11MM,18X33	
...3	M0018	AA97-15547C	ASSY MICOM;,KS7A,GOLD RUSH,VCT49XX,T-GRN	
....4	T0119	AA09-00441A	IC MICOM;VCT4942,ONE CHIP,88P,1.8/3.3/5/	S.N.A
...3	IC602	BP96-00418B	ASSY HEAT SINK P;AA62-30182F,SCREW,TDA72	S.N.A
....4	H/S	0205-001154	OIL-SILICON;G746,-,-	S.N.A
....4	T0085	1201-002118	IC-AUDIO AMP;TDA7297SA,ZIP,15P,-,DUAL,32	
....4	T0081	6003-000335	SCREW-TAPTITE;RH,+,2S,M3,L8,ZPC(YEL),SWR	S.N.A
....4	H/S	AA61-01390A	BRACKET-IC;CT-29A20HR,SECC,T1.0	S.N.A
....4	H/S	AA62-30182F	HEAT SINK-ES;CS29M6,A6063S,T2.0,26.2,52.	S.N.A
...3	DZ016	0403-000714	DIODE-ZENER;MTZJ3.3B,3.32-3.53V,500MW,DO	
..2	T0091	AA94-14775B	ASSY PCB MISC-A/V SIDE;CL34Z6PQUX/XAZ,KS	
...3		0202-001366	SOLDER-WIRE FLUX;-,RS60S,D1.2,63Sn/37Pb,	S.N.A
...3	T0081	6003-001268	SCREW-TAPTITE;TH,+,B,M4,L12,ZPC(YEL),SWR	S.N.A
...3	T0245	AA39-20009D	LEAD CONNECTOR-ASSY;,1P,500,YFH800-01,16	
...3		AA63-10002A	BAND-TIE;NYLON66 V2,L100,NTR	S.N.A
...3		AA96-00940K	ASSY COVER P-A/V;34Z6,SEDA,HIPS,HB,G4309	S.N.A
....4		6902-000611	BAG ROLL;PE FOAM,T1.0,-,-,-,-,-	S.N.A
....4	T0259	AA63-00572A	COVER-A/V;34Z6,HIPS,HB,G4309,DGN-1189	S.N.A
....4	T0578	AA64-02667P	INLAY AV;Z6,Z7,PS,T0.3,SHEET,DGN-K189,KS	
....4	T0069	AA60-00091D	SPACER-FELT;-,FELT,200X10,-,-,BLK,T0.35,	S.N.A
...3		AA97-15530A	ASSY AUTO-A/V SIDE;CL29Z6PQUX/XAZ,KS7A,G	S.N.A
....4	R125	2001-000969	R-CARBON;75OHM,5%,1/8W,AA,TP,1.8X3.2MM	
....4	R125	2001-000969	R-CARBON;75OHM,5%,1/8W,AA,TP,1.8X3.2MM	
....4	C689	2202-000121	C-CERAMIC,MLC-AXIAL;100pF,10%,50V,Y5P,TP	
....4	C689	2202-000121	C-CERAMIC,MLC-AXIAL;100pF,10%,50V,Y5P,TP	
....4	C689	2202-000231	C-CERAMIC,MLC-AXIAL;0.33NF,10%,50V,Y5P,T	
....4	C689	2202-000231	C-CERAMIC,MLC-AXIAL;0.33NF,10%,50V,Y5P,T	
....4	L701	2701-000114	INDUCTOR-AXIAL;10UH,10%,2534	
....4	L702	2701-000114	INDUCTOR-AXIAL;10UH,10%,2534	
....4	L703	2701-000168	INDUCTOR-AXIAL;3.3UH,5%,2534	
....4	L704	2701-000168	INDUCTOR-AXIAL;3.3UH,5%,2534	
....4	L2514	3301-000287	BEAD-AXIAL;,3.5x1.0x6.0mm,3000mA,TP,,,50	
....4	L2514	3301-000287	BEAD-AXIAL;,3.5x1.0x6.0mm,3000mA,TP,,,50	
....4	0	AA41-01081A	PCB-A/V SIDE;CL29Z6,FR-1,1,A,330*245*1.6	S.N.A
...3	JK04	3722-000544	JACK-VHS;4P,11.5mm,AG,BLK,N	
...3	JA701	3722-001164	JACK-PIN;3P,3.4mm,SN,WH:YE:RE,#16-22	

Level	Loc.No.	Code No.	Description;Specification	Remark
...3	T0245	AA39-20068G	LEAD CONNECTOR-ASSY;,8P,700MM,YBNH025-08	
...3	T0245	AA39-20070J	LEAD CONNECTOR-ASSY;,7P,700MM,YBNH250-07	
..2	T0098	AA94-14776B	ASSY PCB MISC-TACT S/W,CONTROL;CL34Z6PQU	
...3		0202-001366	SOLDER-WIRE FLUX;-,RS60S,D1.2,63Sn/37Pb,	S.N.A
...3	T0081	6003-001268	SCREW-TAPTITE;TH,+,B,M4,L12,ZPC(YEL),SWR	S.N.A
...3	D0254	AA32-00012A	MODULE REMOCON;ORC-50HF2,38KHZ,940NM,MES	
...3	T0245	AA39-20069A	LEAD CONNECTOR-ASSY;,5P,500,YBNH025-05,6	
...3	T0005	AA96-00937D	ASSY COVER P-CONTROL;34Z6,HIPS HB,G4309,	S.N.A
....4	T0081	6003-001019	SCREW-TAPTITE;RH,+,B,M4,L12,ZPC(BLK),SWR	S.N.A
....4	CIS1	AA63-00570D	COVER-CONTROL;34Z6,HIPS,HB,G4309,DGN-118	S.N.A
....4		6902-000611	BAG ROLL;PE FOAM,T1.0,-,-,-,-,-	S.N.A
....4	T0022	AA64-02662A	KNOB-CONTROL;Z7,ABS,HB,G3676,S104M+W971	S.N.A
....4	T0069	AA60-00091D	SPACER-FELT;-,FELT,200X10,-,-,BLK,T0.35,	S.N.A
...3	LDY02	0601-000262	LED;ROUND,RED,5mm,700nm	
...3	T0245	AA39-00100E	LEAD CONNECTOR-ASSY;,4P,600MM,YBNH250-04	
...3		AA97-15531B	ASSY AUTO-TACT S/W,CONTROL;CL34Z6PQUX/XA	S.N.A
⚠ 4	CISS	0401-000005	DIODE-SWITCHING;1N4148,75V,150MA,DO-35,T	
⚠ 4	CISS	0401-000005	DIODE-SWITCHING;1N4148,75V,150MA,DO-35,T	
....4	DZ016	0403-000508	DIODE-ZENER;MTZJ5.6B,5.45-5.73V,500MW,DO	
....4	R125	2001-000007	R-CARBON;3KOHM,5%,1/8W,AA,TP,1.8X3.2MM	
....4	R125	2001-000009	R-CARBON;20KOHM,5%,1/8W,AA,TP,1.8X3.2MM	
....4	R075	2001-000020	R-CARBON(S);22OHM,5%,1/2W,AA,TP,2.4X6.4M	
....4	R125	2001-000281	R-CARBON;100OHM,5%,1/8W,AA,TP,1.8X3.2MM	
....4	R125	2001-000577	R-CARBON;2KOHM,5%,1/8W,AA,TP,1.8X3.2MM	
....4	R125	2001-000878	R-CARBON;6.2KOHM,5%,1/8W,AA,TP,1.8X3.2MM	
....4	0	AA41-01082A	PCB-TACT SWITCH;CL29Z6,FR-1,1,A,245*245*	S.N.A
....4	SWP01	3404-000243	SWITCH-TACT;15V,20mA,160gf+-50gf,6x3.4mm	
....4	SWY01	3404-000243	SWITCH-TACT;15V,20mA,160gf+-50gf,6x3.4mm	
....4	SWY02	3404-000243	SWITCH-TACT;15V,20mA,160gf+-50gf,6x3.4mm	
....4	SWY03	3404-000243	SWITCH-TACT;15V,20mA,160gf+-50gf,6x3.4mm	
....4	SWY04	3404-000243	SWITCH-TACT;15V,20mA,160gf+-50gf,6x3.4mm	
....4	SWY05	3404-000243	SWITCH-TACT;15V,20mA,160gf+-50gf,6x3.4mm	
....4	SWY06	3404-000243	SWITCH-TACT;15V,20mA,160gf+-50gf,6x3.4mm	
....4	DZ016	0403-000720	DIODE-ZENER;MTZJ9.1B,8.57-9.01V,500MW,DO	
...3	C701	2401-002291	C-AL;47uF,20%,16V,GP,TP,6.3x5,5	
..2	T0896	AA94-14786A	ASSY PCB MISC-D/FOCUS;CL34Z6PQUX/XAZ,KS7	
...3	LH01	AA26-00011A	TRANS-DUMMY;-,-,-,-,-,-,-,-,-,-,-,-,EE28	
...3	LH02	AA27-40003F	COIL CHOKE;-,3.0MH,ER14x20,PI0.35,-	
...3	T0245	AA39-20061C	LEAD CONNECTOR-ASSY;,3P,200,YFH800-03,S,	
...3		AA97-15537A	ASSY AUTO-D/FOCUS;CL34Z6PQUX/XAZ,KS7A,GO	S.N.A
....4	RH28	2008-001113	R-FUSIBLE(S);0.22ohm,10%,2W,AG,TP,3.9x12	
....4	EY01	6042-000002	EYELET;ID1.5,OD2,L2.8,NI+SN,BSP3-1/2H	S.N.A
....4	EY02	6042-000002	EYELET;ID1.5,OD2,L2.8,NI+SN,BSP3-1/2H	S.N.A
....4	EY03	6042-000002	EYELET;ID1.5,OD2,L2.8,NI+SN,BSP3-1/2H	S.N.A
....4	EY04	6042-000002	EYELET;ID1.5,OD2,L2.8,NI+SN,BSP3-1/2H	S.N.A
....4	EY05	6042-000002	EYELET;ID1.5,OD2,L2.8,NI+SN,BSP3-1/2H	S.N.A
....4	EY06	6042-000002	EYELET;ID1.5,OD2,L2.8,NI+SN,BSP3-1/2H	S.N.A
....4	EY07	6042-000002	EYELET;ID1.5,OD2,L2.8,NI+SN,BSP3-1/2H	S.N.A
....4	EY08	6042-000002	EYELET;ID1.5,OD2,L2.8,NI+SN,BSP3-1/2H	S.N.A
....4	EY09	6042-000002	EYELET;ID1.5,OD2,L2.8,NI+SN,BSP3-1/2H	S.N.A
....4	0	AA41-00589A	PCB-DYNAMIC/FOCUS;CT-29M8HR,FR-1,1L,A,1.	S.N.A
....4	GTH01	AA60-40014A	PIN-GT,ASSY;AUTO	S.N.A
....4	GTH02	AA60-40014A	PIN-GT,ASSY;AUTO	S.N.A
....4	GTH03	AA60-40014A	PIN-GT,ASSY;AUTO	S.N.A

ASSY FIXING

1		AA91-08458B	ASSY FIXING;CL34Z6PQUX/XAZ,KS7A,GOLD RUS	S.N.A
..2	T0081	6003-000333	SCREW-TAPTITE;RH,+,2S,M3,L10,ZPC(YEL),SW	S.N.A
..2	T0081	6003-000333	SCREW-TAPTITE;RH,+,2S,M3,L10,ZPC(YEL),SW	S.N.A
..2	T0081	6006-001095	SCREW-TAPTITE;WP,BH,+,M4,L12,ZPC(YEL),SW	S.N.A
..2	T0245	AA39-20010B	LEAD CONNECTOR-ASSY;,1P,500,YFH800-01,S,	
..2	T0070	AA61-01190A	HOLDER-CHASSIS;Z7,HIPS V0,G4309	S.N.A
..2		AA65-30009A	CLAMPER CORE-FBT;-,ABS,V0,-,BLK,-	S.N.A
..2		AA65-30018A	CLAMPER CORE-WIRE;DONG-A,NYLON-66,-,-,-,	S.N.A
..2	CLAMP	AA65-30104C	CLAMPER CORE-WIRE;ALL MODEL,NYLON 66,V2,	S.N.A
..2	T0130	AA96-02477A	ASSY COVER P-TERMINAL BOARD;29Z6,HIPS,V0	S.N.A
...3		AA64-02822R	INLAY-T/BOARD;Z6,PS,T0.5,SHEET,KS7A NT	S.N.A
...3		AA65-00025A	TERMINAL-BOARD ANT;,HIPS V0,BLK	S.N.A
⚠ ..2	T0066	AA96-20109C	ASSY POWER CORD;-,CP2/NO(4.0),H/C300,KKP	S.N.A
...3		3811-001609	WIRE-PVC CU;BCWA,300V,ROLL,-,#22,BLK	S.N.A
...3	T0268	AA39-10006X	CBF-POWER CORD;-,KKP419C,KLCE-2F,2.286MT	
...3	T0010	AA61-20284A	HOLDER;P-CORD,PP,-,-,-,BLK,VO,KE-002	S.N.A

ASSY P/MATERIAL

1		AA92-05373A	ASSY P/MATERIAL;34Z6	S.N.A
..2	T0214	AA60-40006A	PIN-STAPLE;AUTO,33X17.8X2.4,H18,33X17.8X	S.N.A
..2	T0172	AA69-02609A	BAND-PP;W18,CLEA,1G	S.N.A
..2		6902-000061	BAG AIR;LDPE,T0.2,L1000,W500,TRP,,,	S.N.A
..2		6902-000001	BAG AIR;LDPE,T0.2,L1800,W1000,TRP,,,LDPE	S.N.A
..2		6902-000008	BAG PE;HDPE/NITRON/HDPE,T0.015/T0.5/T0.0	S.N.A

ASSY ACCESSORY

1	M0045	AA92-10284A	ASSY ACCESSORY;CL29Z6PQUX/XAZ,KS7A,GOLD	S.N.A
..2		6902-000009	BAG PE;HDPE,T0.03,L400,W240,TRP,8,2,PE M	S.N.A
..2	T0511	AA68-03503A	MANUAL USERS;CL34Z6,SAMSUNG,BP,BRAZIL,MO	S.N.A
..2	0	AA68-03242B	MANUAL-WARRANTY CARD;TH-ENG,SAFETY GUIDE	
	S.N.A			
..2	T0074	AA59-00325C	REMOCON;GOLDRUSH,TM76A,200*54*30,52MX,46	
...3	TM76C	AA83-00097A	CKD-CASE TOP,C;TM76A,SEDA,AA59-00325C	S.N.A
...3	TM76	AA83-00098A	CKD-CASE BOTTOM;TM76A,SEDA,AA59-00325A	S.N.A
...3	TM76	AA83-00107A	CKD-DOOR COVER;TM76A,SEDA,AA59-00325A	S.N.A
...3	TM76	AA83-00114A	CKD-BATTERY-COVER;TM76A,SEDA,AA59-00325A	S.N.A
...3	TM76	AA83-00115A	CKD-WINDOW-RMC;TM76A,SEDA,AA59-00325A	S.N.A
...3	TM76C	AA83-00116A	CKD-INLAY-PC,C;TM76A,SEDA,AA59-00325C	S.N.A
...3	TM76C	AA83-00120A	CKD-RUBBER-TOP,A;TM76A,SEDA,AA59-00325A	S.N.A
...3	TM76	AA83-00122A	CKD-SCREW-TH;TM76A,SEDA,AA59-00325A	S.N.A
...3	TM76C	AA83-00123A	CKD-INLAY-BACK,C;TM76A,SEDA,AA59-00325C	S.N.A
...3	TM76	AA83-00125A	CKD-RUBBER-BOTTOM;TM76A,SEDA,AA59-00325A	S.N.A
...3	TM76	AA83-00126A	CKD-SPRING-PLUS;TM76A,SEDA,AA59-00325A	S.N.A
...3	TM76	AA83-00127A	CKD-SPRING-MINUS;TM76A,SEDA,AA59-00325A	S.N.A
...3	TM76	AA83-00128A	CKD-SPRING-COMMON;TM76A,SEDA,AA59-00325A	S.N.A
...3	TM76	AA83-00139A	CKD-IR-LED;AA59-00325A,SI-5312H	S.N.A
...3	TM76	AA83-00140A	CKD-PCB;AA59-00325A,FR1-SILVER	S.N.A
...3	TM76	AA83-00141A	CKD-IC;AA59-00325A,Z86L88-52MX	S.N.A
...3	TM76	AA83-00142A	CKD-CHIP-RESISTOR;AA59-00325A,2012 5% T/	S.N.A
...3	TM76	AA83-00143A	CKD-CHIP-CAPACITOR;AA59-00325A,CS2012Y5N	S.N.A
...3	TM76	AA83-00144A	CKD-CHIP-RESISTOR;AA59-00325A,2012 5% T/	S.N.A
...3	TM76	AA83-00145A	CKD-CHIP-RESISTOR;AA59-00325A,2012 5%T/R	S.N.A
...3	TM76	AA83-00146A	CKD-CHIP-TRANSISTOR;AA59-00325A,STC3265Y	S.N.A
...3	TM76	AA83-00147A	CKD-CHIP-DIODE;AA59-00325A,BAV70	S.N.A
...3	TM76	AA83-00148A	CKD-ELE CONDENSOR;AA59-00325A,SG 1 6 V 4	S.N.A
...3	TM76	AA83-00149A	CKD-RESONATOR;AA59-00325A,Z T T 8 . 0 0M	S.N.A
...3	TM76	AA83-00150A	CKD-CHIP-LED;AA59-00325A,C - 1 9 0 C K T	S.N.A
...3	TM76	AA83-00151A	CKD-CHIP-LED;AA59-00325A,LTST-190GKT	S.N.A
...3	TM76	AA83-00153A	CKD-INDICATOR-LED;TM76A,SEDA,AA59-00325A	S.N.A
...3	PE-BAG	AA83-00154A	CKD-PE-BAG;TM76A,SEDA,AA59-00325A	S.N.A
...3	LABEL	AA83-00157A	CKD-LABEL QC;TM76A,SEDA,AA59-00325A	S.N.A

ASSY COVER REAR

1	M0002	AA90-03250Q	ASSY COVER REAR;34Z6,HIPS,HB,G4309,SV012	S.N.A
..2	T0015	AA64-02749F	CABINET BACK;CL34Z6,HIPS,HB,G4309,SV012P	
..2	T0214	AA65-30008A	CLAMPER CORE-CORD;-,PE,HB,-,BLK,-	S.N.A

3. Block Diagram

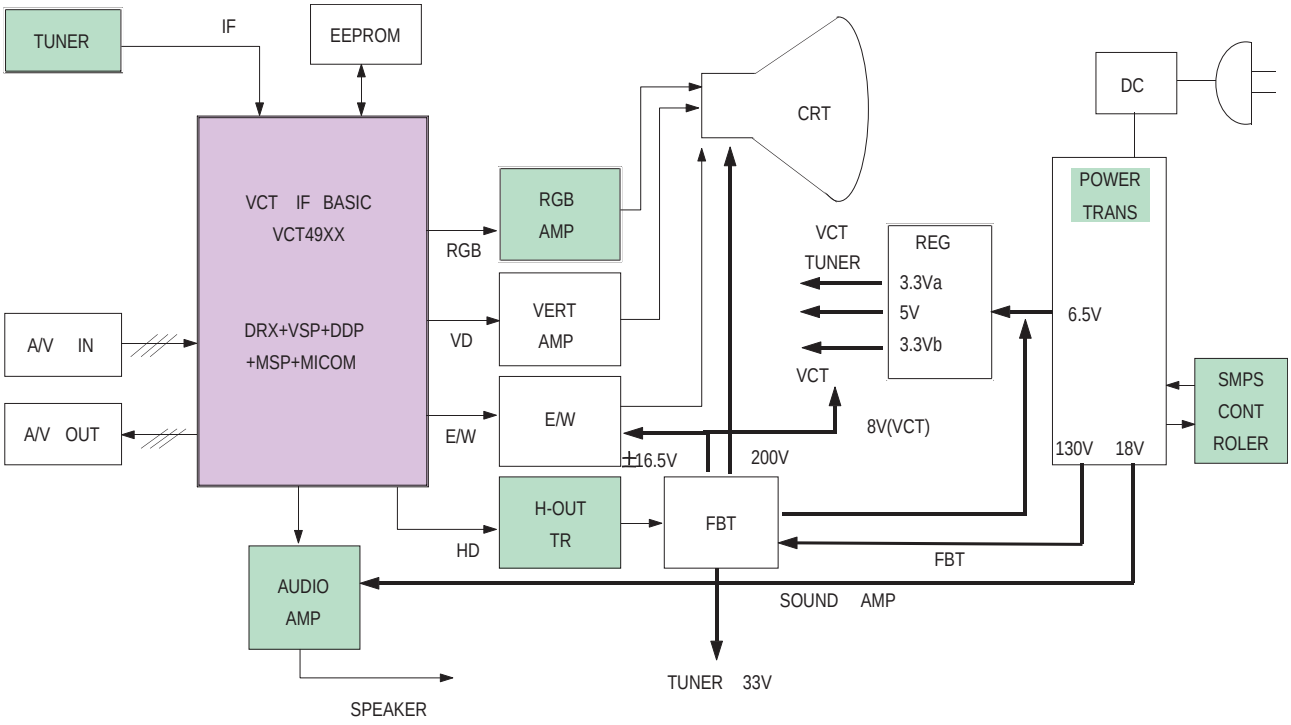

MEMO

6. Schematic Diagrams

6-1 MAIN 1

This Document can not be used without Samsung's authorization.

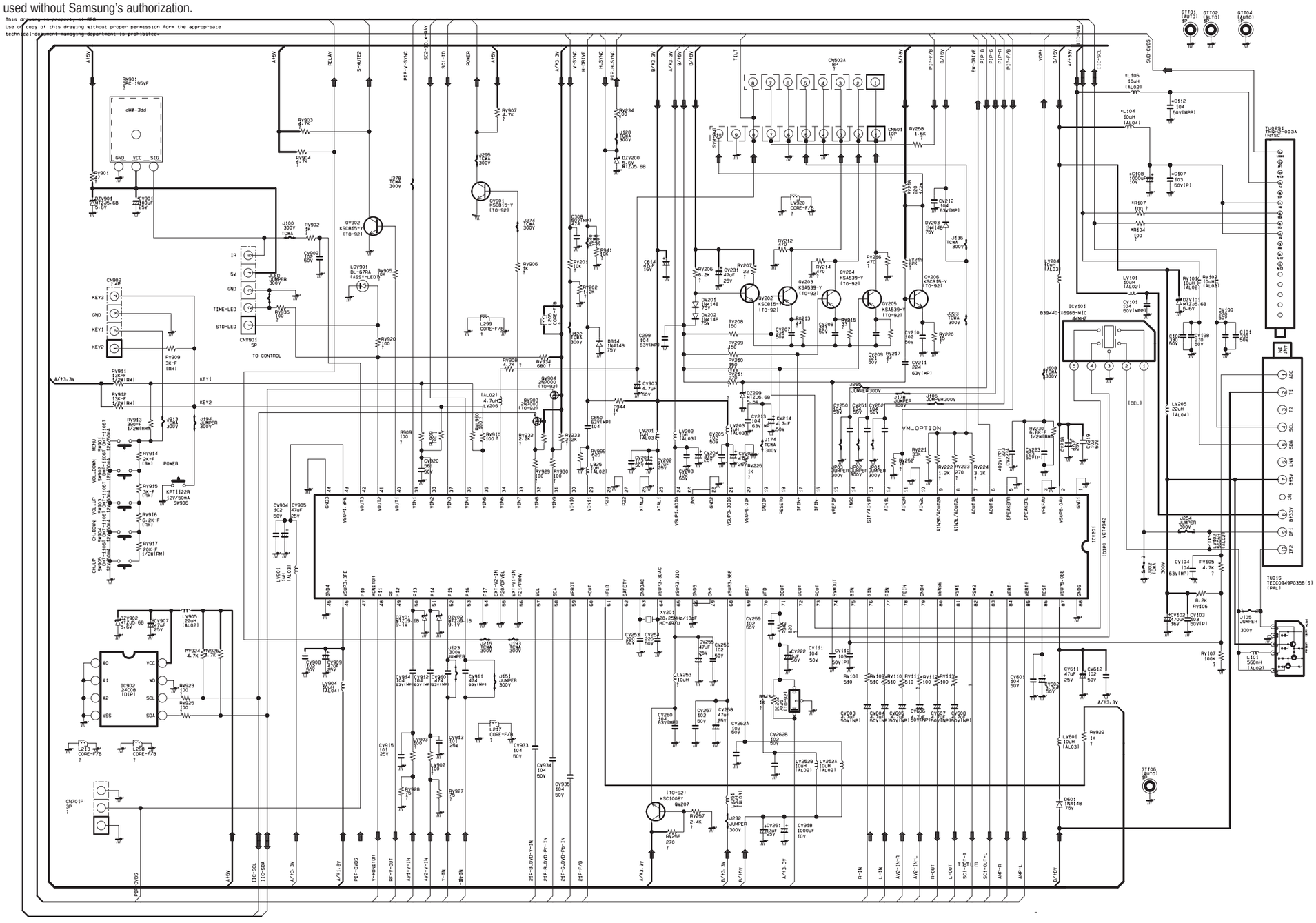

6-2 MAIN 2

This Document can not be used without Samsung's authorization.

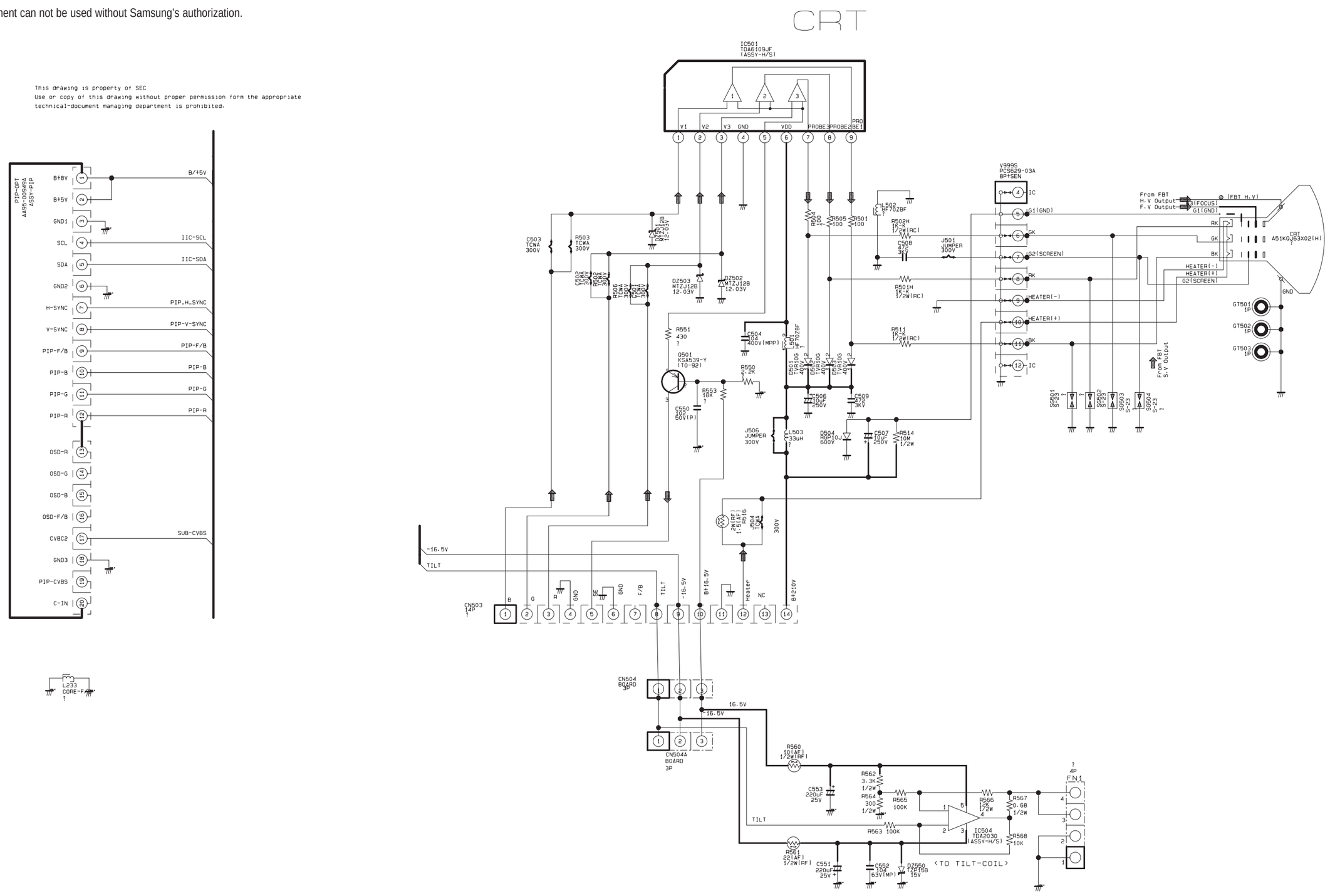

6-3 MAIN 3

This Document can not be used without Samsung's authorization.

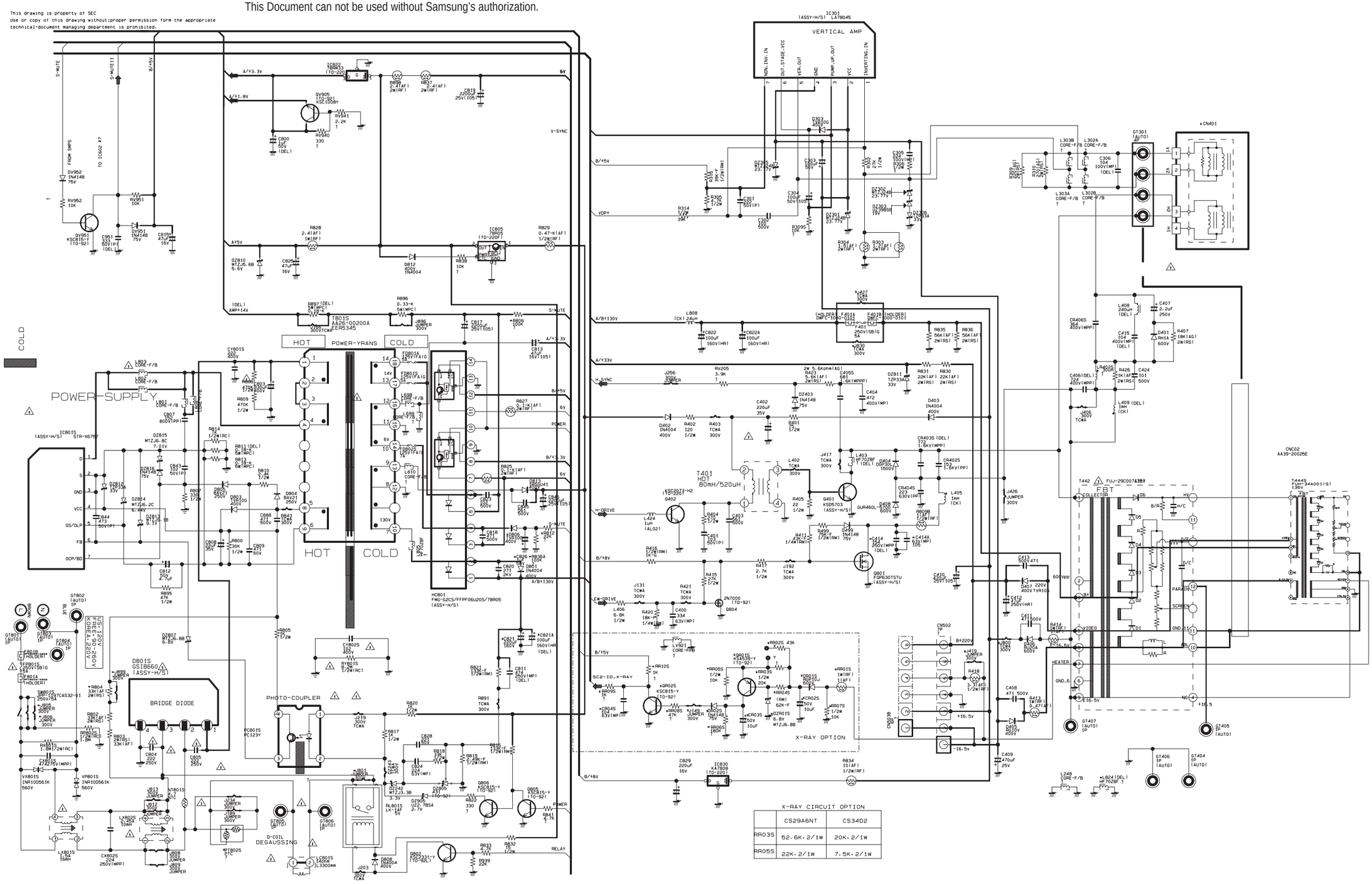

X-RAY CIRCUIT OPTION

	CS29A6NT	CS34D2
RR03S	52.6K·2/1W	20K·2/1W
RR05S	22K·2/1W	7.5K·2/1W

6-4 MAIN 4
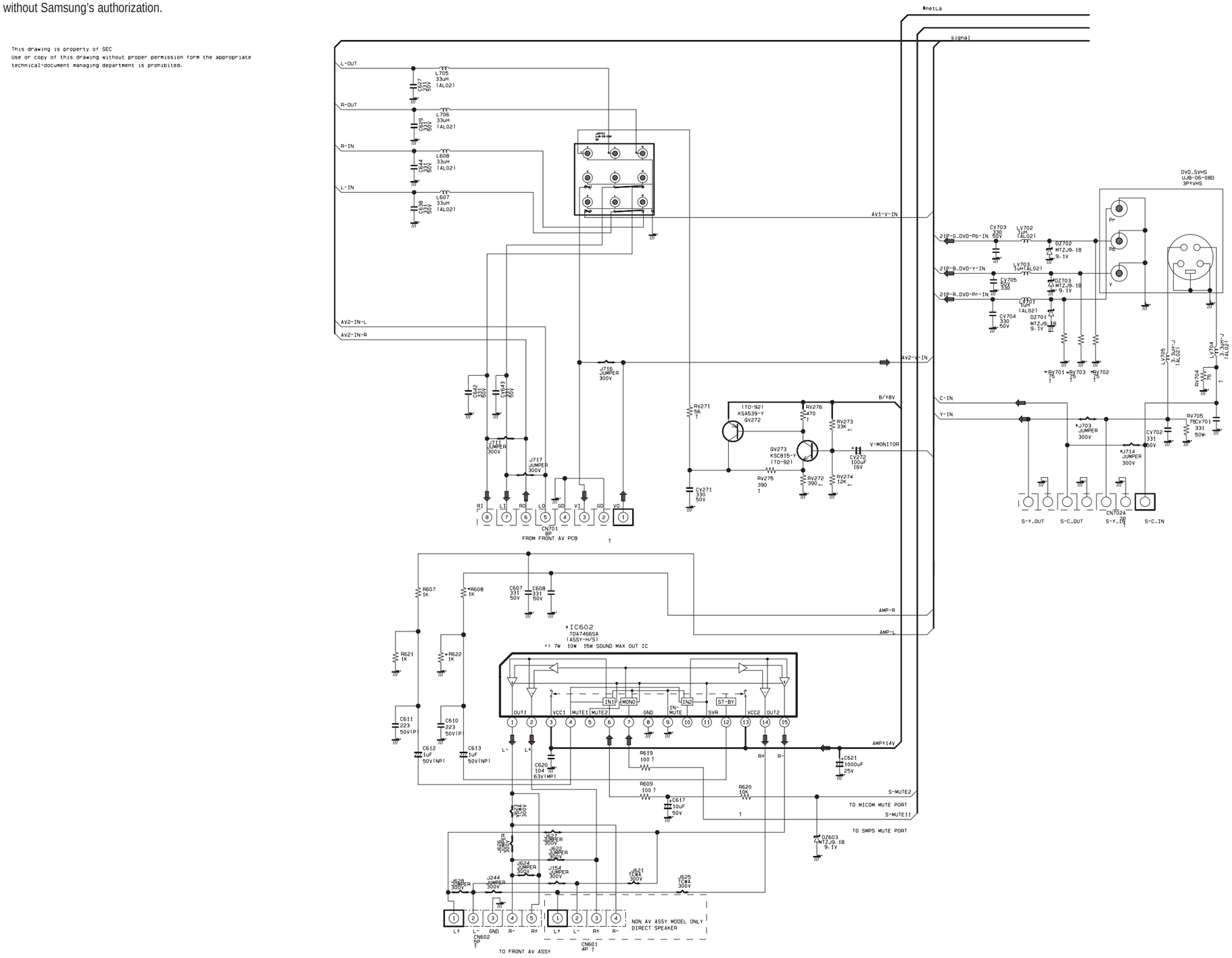
This Document can not be used without Samsung's authorization.