HCD-EC69/EC79/EC99

SERVICE MANUAL

AEP Model
E Model

Ver. 1.0 2009.03

Photo: HCD-EC99

- HCD-EC69 is the amplifier, USB, CD player and tuner section in MHC-EC69.
- HCD-EC79 is the amplifier, USB, CD player and tuner section in MHC-EC79.
- HCD-EC99 is the amplifier, USB, CD player and tuner section in MHC-EC99.

- "WALKMAN" and "WALKMAN" logo are registered trademarks of Sony Corporation.
- MICROVAULT is a trademark of Sony Corporation.
- MPEG Layer-3 audio coding technology and patents licensed from Fraunhofer IIS and Thomson.
- Windows Media is a registered trademark of Microsoft Corporation in the United States trademark of Microsoft Corporation in and/or other countries.

Model Name Using Similar Mechanism	HCD-EC78
Mechanism Type	CDM88A-K6BD90-WOD
Base Unit Name	BU-K6BD90-WOD
Optical Pick-up Block Name	KSM-213DCP

SPECIFICATIONS

Amplifier section

The following measured at AC 230 V, 50/60 Hz (European model)
The following measured at AC 120, 127, 220, 240 V, 50/60 Hz (Other models)

HCD-EC99
Front Speaker:
Power output (rated):
Low channel
50 W + 50 W (at 8 Ω, 1 kHz, 1% THD)
High channel
50 W + 50 W (at 8 Ω, 8 kHz, 1% THD)
RMS output power (reference):
Low channel
65 W + 65 W (per channel at 8 Ω, 1 kHz, 10% THD)
High channel
65 W + 65 W (per channel at 8 Ω, 8 kHz, 10% THD)
Subwoofer:
RMS output power (reference):
90 W (at 4 Ω, 80 Hz, 10% THD)

HCD-EC79
Power output (rated):
Low channel
55 W + 55 W (at 8 Ω, 1 kHz, 1% THD)
High channel
55 W + 55 W (at 8 Ω, 8 kHz, 1% THD)
RMS output power (reference):
Low channel
75 W + 75 W (per channel at 8 Ω, 1 kHz, 10% THD)
High channel
75 W + 75 W (per channel at 8 Ω, 8 kHz, 10% THD)

HCD-EC69
Power output (rated):
50 W + 50 W (at 6 Ω, 1 kHz, 1% THD)
RMS output power (reference):
70 W + 70 W (per channel at 6 Ω, 1 kHz, 10% THD)

Inputs

PC IN (stereo mini jack):
Sensitivity 800 mV, impedance 22 kilohms

Outputs

PHONES (stereo mini jack):
accepts headphones with an impedance of 8 Ω or more
SPEAKER: impedance
HCD-EC79/EC99: 8 Ω
HCD-EC69: 6 Ω
SUBWOOFER (HCD-EC99 only): impedance 4 Ω

USB section

Supported bit rate:
MP3 (MPEG 1 Audio Layer-3)/WMA/AAC: 32 – 320 kbps, VBR
Sampling frequencies:
MP3 (MPEG 1 Audio Layer-3)/WMA/AAC: 32/44.1/48 kHz
(USB) port:
Maximum current: 500 mA

CD player section

System:
Compact disc and digital audio system
Laser Diode Properties
Emission Duration: Continuous
Laser Output*: Less than 44.6μW
* This output is the value measurement at a distance of 200mm from the objective lens surface on the Optical Pick-up Block with 7mm aperture.
Frequency response: 20 Hz – 20 kHz
Signal-to-noise ratio: More than 90 dB
Dynamic range: More than 88 dB

Tuner section

FM stereo, FM/AM superheterodyne tuner Antenna:
FM lead antenna
AM loop antenna

FM tuner section:
Tuning range:
87.5 – 108.0 MHz (50 kHz step)
Intermediate frequency: 10.7 MHz

AM tuner section:
Tuning range
European model:
531 – 1,602 kHz (with 9 kHz tuning interval)
Latin American models:
530 – 1,710 kHz (with 10 kHz tuning interval)
531 – 1,710 kHz (with 9 kHz tuning interval)
Other models:
531 – 1,602 kHz (with 9 kHz tuning interval)
530 – 1,610 kHz (with 10 kHz tuning interval)
Intermediate frequency: 450 kHz

General

Power requirements
European model:
AC 230 V, 50/60 Hz
Mexican model:
AC 127 V, 60 Hz
Argentine model:
AC 220 V, 50/60 Hz
Other models:
AC 120, 220, 230 – 240 V, 50/60 Hz, adjustable with voltage selector
Power consumption
HCD-EC99: 175 W (0.5 W at the Power Saving Mode)
HCD-EC79: 170 W (0.5 W at the Power Saving Mode)
HCD-EC69: 110 W (0.5 W at the Power Saving Mode)
Dimensions (w/h/d) (excl. speakers)
Approx. 200 × 306 × 415 mm
Mass (excl. speakers)
HCD-EC99: Approx. 6.5 kg
HCD-EC79: Approx. 6.4 kg
HCD-EC69: Approx. 5.4 kg

Design and specifications are subject to change without notice.

COMPACT DISC RECEIVER

9-889-442-01
2009C05-1

© 2009.03

Sony Corporation
Audio&Video Business Group
Published by Sony Techno Create Corporation

SONY®

NOTES ON CHIP COMPONENT REPLACEMENT

- Never reuse a disconnected chip component.
- Notice that the minus side of a tantalum capacitor may be damaged by heat.

FLEXIBLE CIRCUIT BOARD REPAIRING

- Keep the temperature of soldering iron around 270 °C during repairing.
- Do not touch the soldering iron on the same conductor of the circuit board (within 3 times).
- Be careful not to apply force on the conductor when soldering or unsoldering.

CAUTION
Use of controls or adjustments or performance of procedures other than those specified herein may result in hazardous radiation exposure.

CLASS 1 LASER PRODUCT
LUOKAN 1 LASERLAITE
KLASS 1 LASERAPPARAT

This appliance is classified as a CLASS 1 LASER product. This marking is located on the rear or bottom exterior.

TABLE OF CONTENTS

1. SERVICING NOTES 3

2. GENERAL 6

3. DISASSEMBLY
3-1. Disassembly Flow 8
3-2. Side Panel (L)/(R) 9
3-3. Panel (Top) 9
3-4. MAIN Board 10
3-5. Front Panel Block 10
3-6. Back Panel Block 11
3-7. CD Mechanism Block 11
3-8. Base Unit 12
3-9. OP Base Assy (KSM-213D) 12
3-10. Belt (DLM3A) 13

4. TEST MODE 14

5. ELECTRICAL ADJUSTMENTS 18

6. DIAGRAMS
6-1. Block Diagram - CD, TUNER Section - 20
6-2. Block Diagram - MAIN Section - 21
6-3. Block Diagram - PANEL, POWER SUPLLY Section - 22
6-4. Printed Wiring Board - CD Board - 24
6-5. Schematic Diagram - CD Board - 25
6-6. Printed Wiring Board - USB Board - 26
6-7. Schematic Diagram - USB Board - 27
6-8. Schematic Diagram - MAIN Board (1/2) - 28
6-9. Schematic Diagram - MAIN Board (2/2) - 29
6-10. Printed Wiring Board - MAIN Board - 30
6-11. Printed Wiring Boards - AMP Section - 31
6-12. Schematic Diagram - 2CH-4CH AMP Board - 32
6-13. Schematic Diagram - 3CH AMP Board (EC99) - 33
6-14. Printed Wiring Board - PANEL Board - 34
6-15. Schematic Diagram - PANEL Board - 35
6-16. Printed Wiring Boards - AUDIO IN/OUT, KEY, POWER SUPPLY Section - 36
6-17. Schematic Diagram - AUDIO IN/OUT, KEY, POWER SUPPLY Section - 37

7. EXPLODED VIEWS
7-1. Panel Section 45
7-2. Front Panel Section 46
7-3. Chassis Section 47
7-4. Main Section 48
7-5. CD Mechanism Section (CDM88A-K6BD90-WOD) 49

8. ELECTRICAL PARTS LIST 50

Accessories are given in the last of the electrical parts list.

SAFETY-RELATED COMPONENT WARNING!

COMPONENTS IDENTIFIED BY MARK ⚠ OR DOTTED LINE WITH MARK ⚠ ON THE SCHEMATIC DIAGRAMS AND IN THE PARTS LIST ARE CRITICAL TO SAFE OPERATION. REPLACE THESE COMPONENTS WITH SONY PARTS WHOSE PART NUMBERS APPEAR AS SHOWN IN THIS MANUAL OR IN SUPPLEMENTS PUBLISHED BY SONY.

SECTION 1
SERVICING NOTES

NOTES ON HANDLING THE OPTICAL PICK-UP BLOCK OR BASE UNIT

The laser diode in the optical pick-up block may suffer electrostatic break-down because of the potential difference generated by the charged electrostatic load, etc. on clothing and the human body.
During repair, pay attention to electrostatic break-down and also use the procedure in the printed matter which is included in the repair parts.
The flexible board is easily damaged and should be handled with care.

NOTES ON LASER DIODE EMISSION CHECK

The laser beam on this model is concentrated so as to be focused on the disc reflective surface by the objective lens in the optical pickup block. Therefore, when checking the laser diode emission, observe from more than 30 cm away from the objective lens.

UNLEADED SOLDER

Boards requiring use of unleaded solder are printed with the lead-free mark (LF) indicating the solder contains no lead.
(**Caution:** Some printed circuit boards may not come printed with the lead free mark due to their particular size)

: LEAD FREE MARK

Unleaded solder has the following characteristics.

- Unleaded solder melts at a temperature about 40 °C higher than ordinary solder.
  Ordinary soldering irons can be used but the iron tip has to be applied to the solder joint for a slightly longer time.
  Soldering irons using a temperature regulator should be set to about 350 °C.
  Caution: The printed pattern (copper foil) may peel away if the heated tip is applied for too long, so be careful!
- Strong viscosity
  Unleaded solder is more viscous (sticky, less prone to flow) than ordinary solder so use caution not to let solder bridges occur such as on IC pins, etc.
- Usable with ordinary solder
  It is best to use only unleaded solder but unleaded solder may also be added to ordinary solder.

RELEASING THE DISC TRAY LOCK

The disc tray lock function for the antitheft of an demonstration disc in the store is equipped.

Releasing Procedure:

1. Press [I/⏻] button to turn the power on.
2. Press the [FUNCTION] button to select CD function.
3. While pressing the [■] button, press the [⏏] button for more 5 seconds).
4. The message “UNLOCKED” is displayed and the disc tray is unlocked.

Note: When “LOCKED” is displayed, the slot lock is not released by turning power on/off with the [I/⏻] button.

MODEL IDENTIFICATION
- Back Panel -

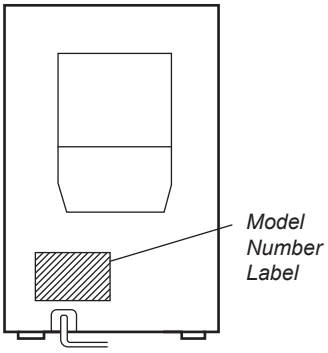

Model	Part No.
EC69: AEP	4-133-259-0□
EC69: E2, E51	4-133-263-0□
EC69: MX	4-133-261-0□
EC69: AR	4-133-262-0□
EC79: AEP	4-133-249-0□
EC79: E2, E51	4-133-253-0□
EC79: MX	4-133-251-0□
EC79: AR	4-133-252-0□
EC99: AEP	4-133-243-0□
EC99: E2, E51	4-133-247-0□
EC99: MX	4-133-245-0□
EC99: AR	4-133-246-0□

- Abbreviation
  AR : Argentina model
  E2 : 120V AC area in E model
  E51 : Chilean and Peruvian models
  MX : Mexican model

HOW TO OPEN THE TRAY WHEN POWER SWITCH TURN OFF

Note: *Please take out the side panel (R) from a set refer to DISASSEMBLY (page 9).*

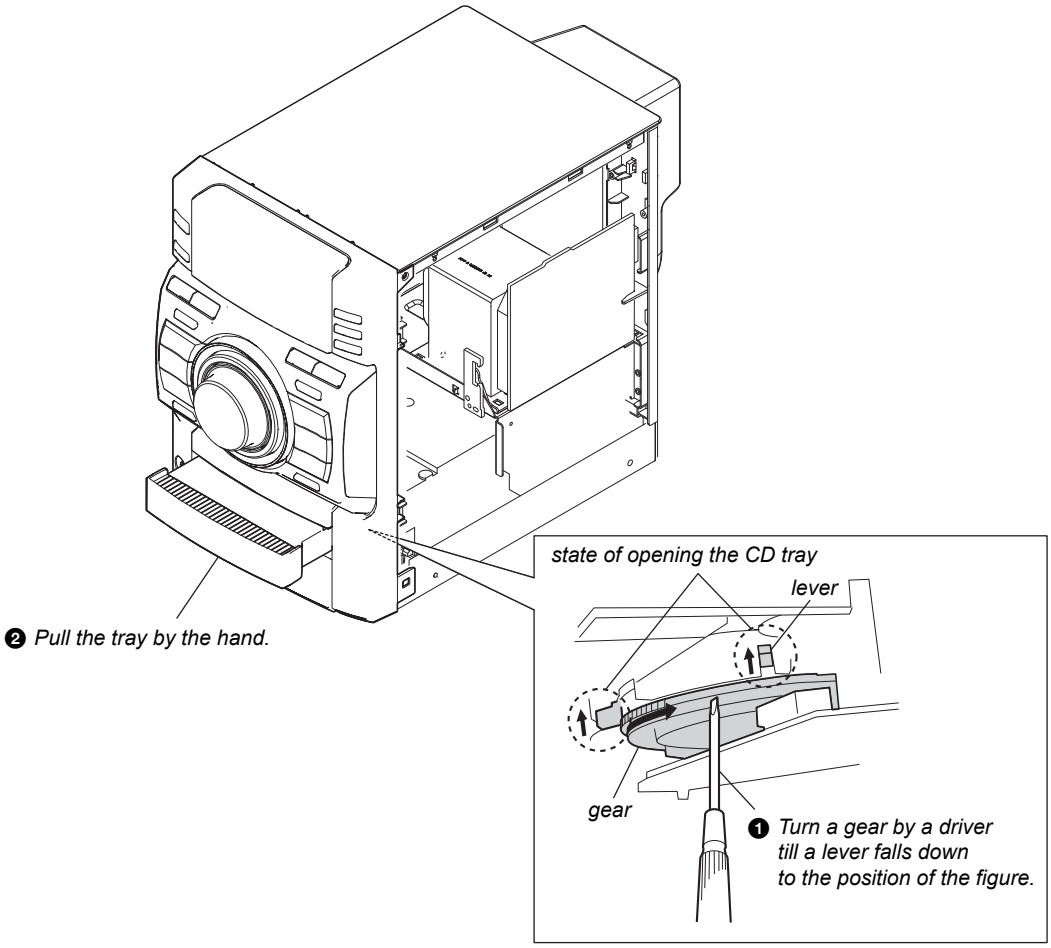

HOW TO REMOVE THE KNOB (VOL)

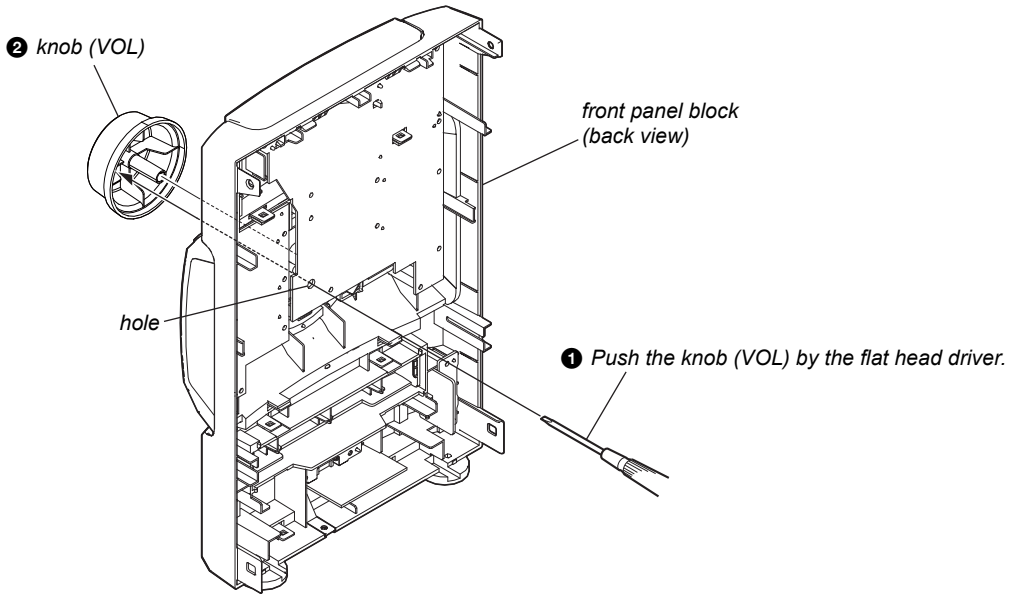

CAPACITOR DISCHARGE FOR ELECTRIC SHOCK PREVENTION

Note: *Please take out the side panel (L) from a set refer to DISASSEMBLY (page 9).*

In checking the MAIN board, make a capacitor discharge of C622, C626, C677 and C678 for electric shock prevention.

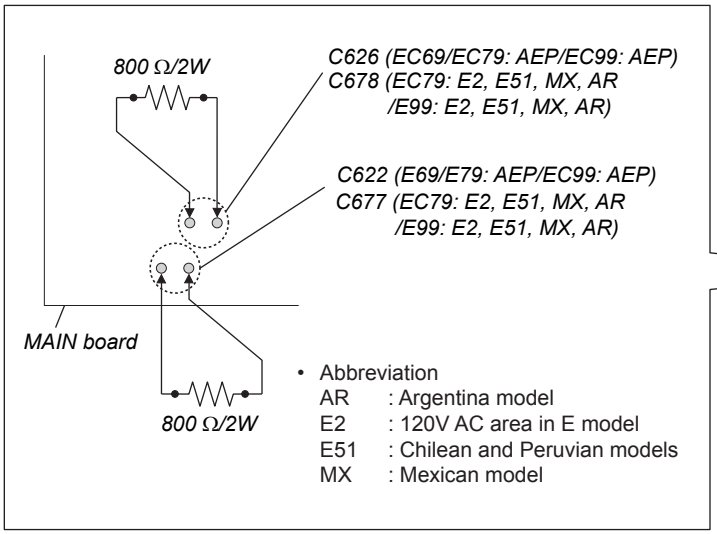

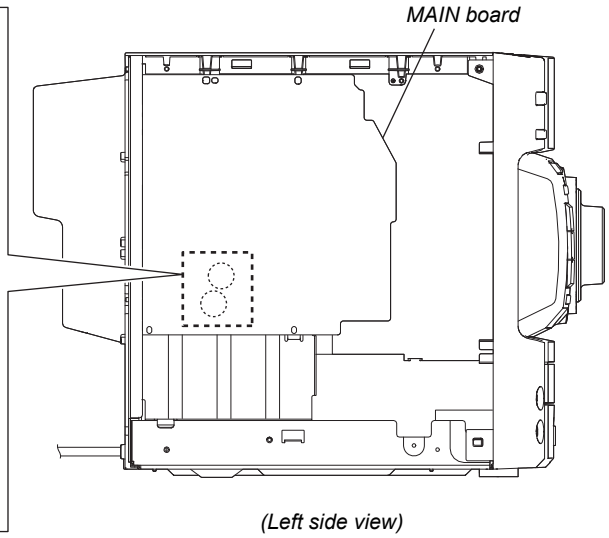

SECTION 2
GENERAL

This section is extracted from instruction manual.

Guide to parts and controls

This manual mainly explains operations using the remote, but tha same operations can also be performed using the buttons on the unit having the same or similar names.

Main Unit

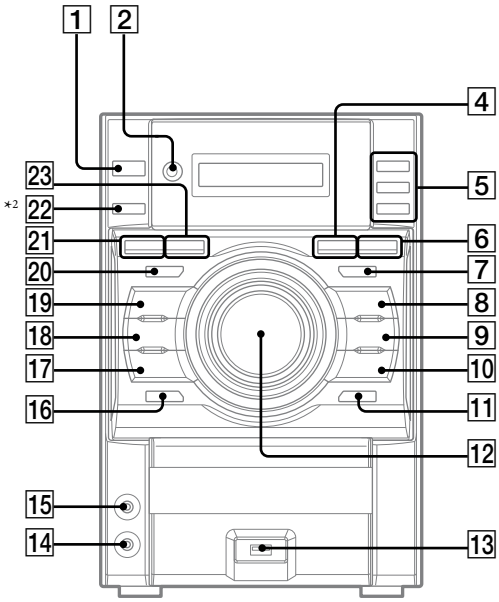

*2 HCD-EC99 only

1
I/⏻ (on/standby) button
Press to turn on the system.

2
Remote sensor

4
CD button
Press to select the CD function.

5
DISC 1 – 3 buttons
Press to select a disc. Press to switch to the CD function from other function.

6
USB button
Press to select the USB function.

7
DSGX button
Press to select the sound effect.

8
🗀 + (select folder) button
Press to select a folder.

9
■ (stop) button
Press to stop playback.

10
TUNING + button
Press to tune in the desired station.

▶▶I (go forward) button
Press to select a track or file.

▶▶ (fast forward) button
Press to find a point in a track or file.

11
⏏ (open/close) button
Press to insert and eject a disc.

12
VOLUME control
Turn to adjust the volume.

13
⭠ (USB) port
Connect an optional USB device.

14
PHONES jack
Connect the headphones.

15
PC IN jack
Connect an audio component (Portable audio player, etc.).

16
DISC SKIP/EX-CHANGE button
Press to select a disc. Press to exchange a disc while playing.

17
TUNING – button
Press to tune in the desired station.

I◀◀ (go back) button
Press to select a track or file.

◀◀ (rewind) button
Press to find a point in a track or file.

18
▶II (play/pause) button
Press to start or pause playback.

19
🗀 – (select folder) button
Press to select a folder.

20
EQ button
Press to select the sound effect.

21
DISPLAY button
Press to change the information on the display.

22
(HCD-EC99 only)
SUBWOOFER ON/OFF button
Press to turn on or off the subwoofer.

23
FUNCTION button
Press to select the function.

Remote

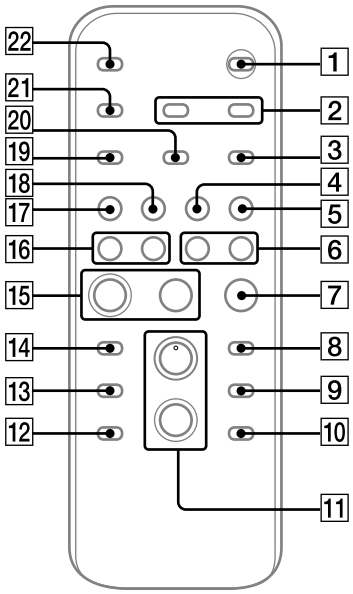

1
I/⏻ (on/standby) button
Press to turn on the system.

2
CLOCK/TIMER SELECT button
CLOCK/TIMER SET button
Press to set the clock and the Play Timer.

3
REPEAT/FM MODE button
Press to listen to a disc, a USB device, a single track or filr repeatedly.
Press to select the FM reception mode (monaural or stereo).

4
TUNER/BAND button
Press to select the TUNER function.
Press to select FM or AM reception mode.

5
FUNCTION button
Press to select the function.

6
◀◀/▶▶ (rewind/fast forward) button
Press to find a point in a track or file.

7
■ (stop) button
Press to stop playback.

8
ENTER button
Press to enter the settings.

9
DISC SKIP button
Press to select a disc.

10
🗀 + (select folder) button
Press to select a folder.

11
VOLUME +/– button
Press to adjust the volume.

12
🗀 – (select folder) button
Press to select a folder.

13
EQ button
Press to select the sound effect.

14
CLEAR button
Press to delete a pre-programmed track or file.

15
▶ (play) button
Press to start playback.

❚❚ (pause) button
Press to pause playback.

16
⏮/⏭ (go back/go forward) button
Press to select a track or file.

+/– (tuning) button
Press to tune in the desired station.

17
USB button
Press to select the USB function.

18
CD button
Press to select the CD function.

19
TUNER MEMORY button
Press to preset the radio station.

20
PLAY MODE/TUNING MODE button
Press to select the play mode of a CD or MP3 disc.
Press to select the tuning mode.

21
DISPLAY button
Press to change the information on the display.

22
SLEEP button
Press to set the Sleep Timer.

Setting the clock

Use buttons on the remote to set the clock.

1 Turn on the system.
Press I/⏻.

2 Select the clock set mode.
Press CLOCK/TIMER SET.
If "PLAY SET" flashes, press ⏮/⏭ repeatedly to select "CLOCK," and then press ENTER.

3 Set the time.
Press ⏮/⏭ repeatedly to set the hour, and then press ENTER.

4 Use the same procedure to set the minutes.

Note
The clock settings are lost when you disconnect the power cord or if a power failure occurs.

To display the clock when the system is off

Press DISPLAY repeatedly until the clock is displayed. The clock is displayed for about 8 seconds.

SECTION 3
DISASSEMBLY

- This set can be disassembled in the order shown below.

3-1. DISASSEMBLY FLOW

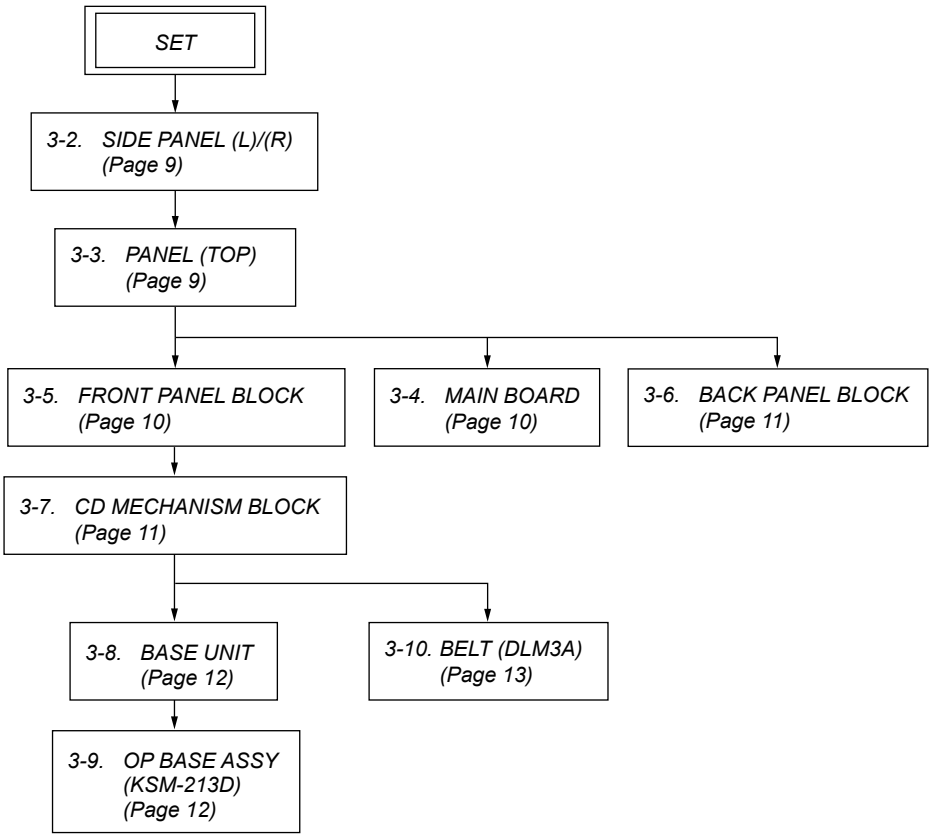

Note: Follow the disassembly procedure in the numerical order given.

3-2. SIDE PANEL (L)/(R)

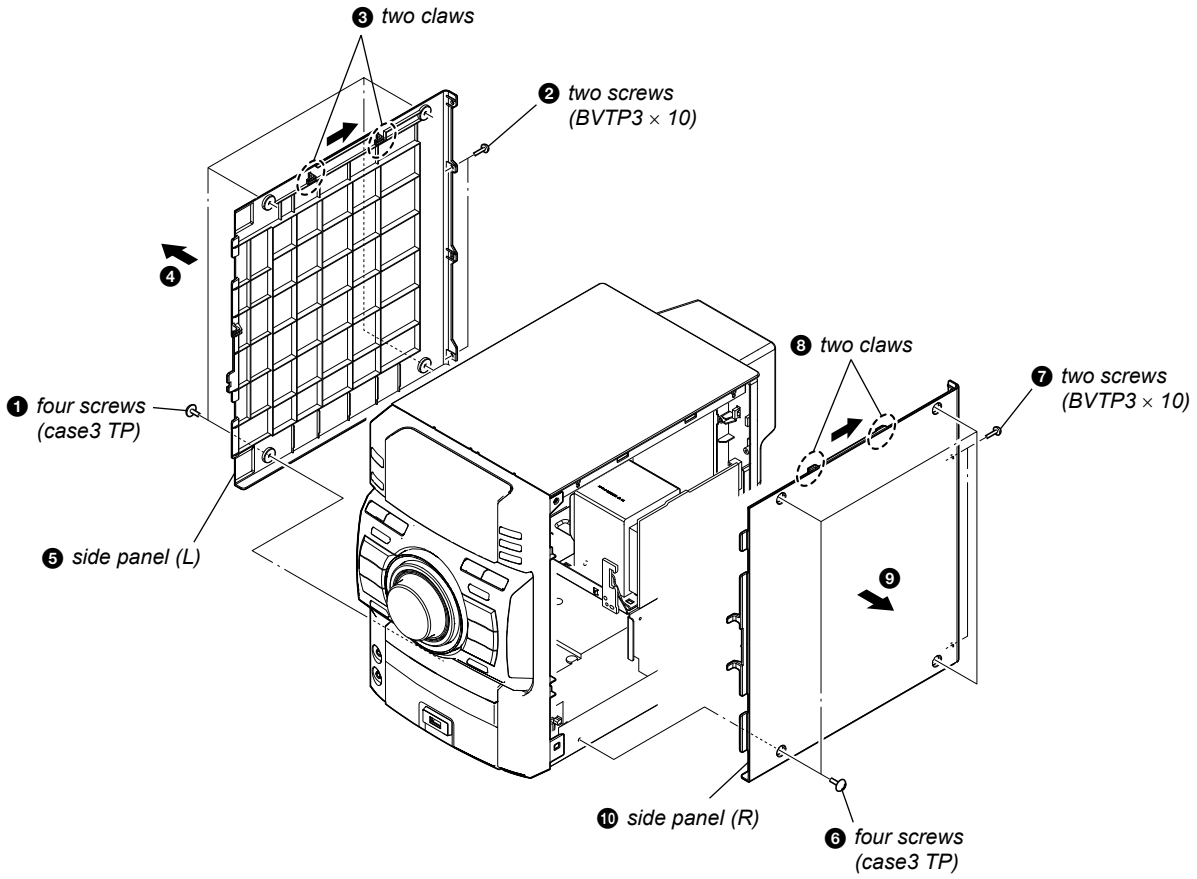

3-3. PANEL (TOP)

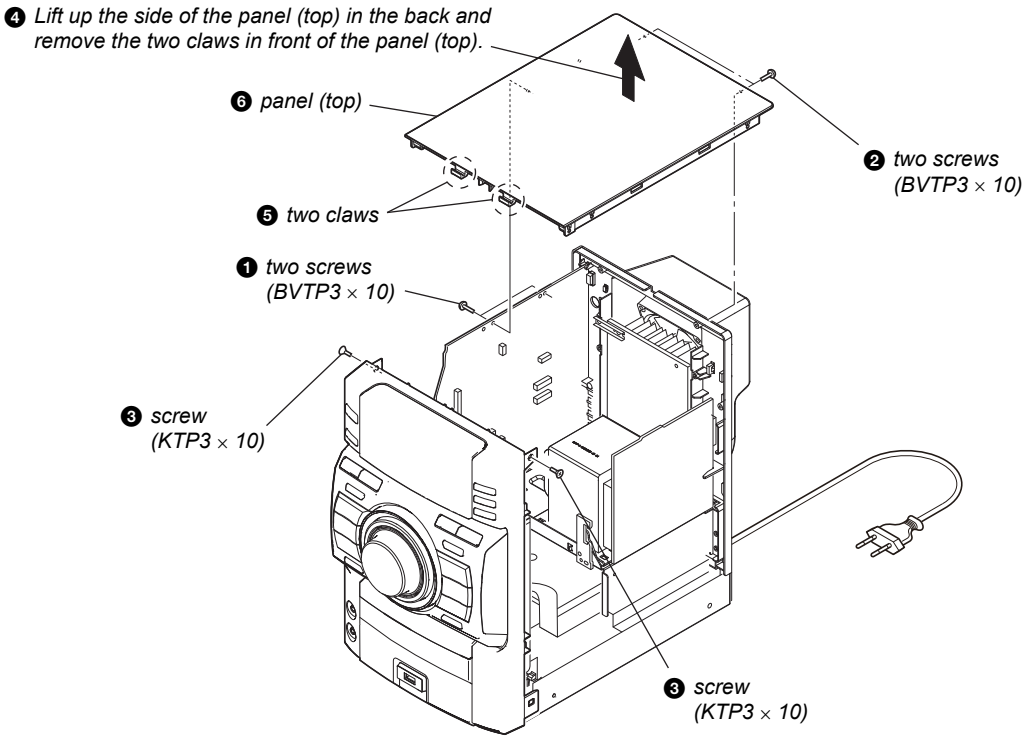

3-4. MAIN BOARD

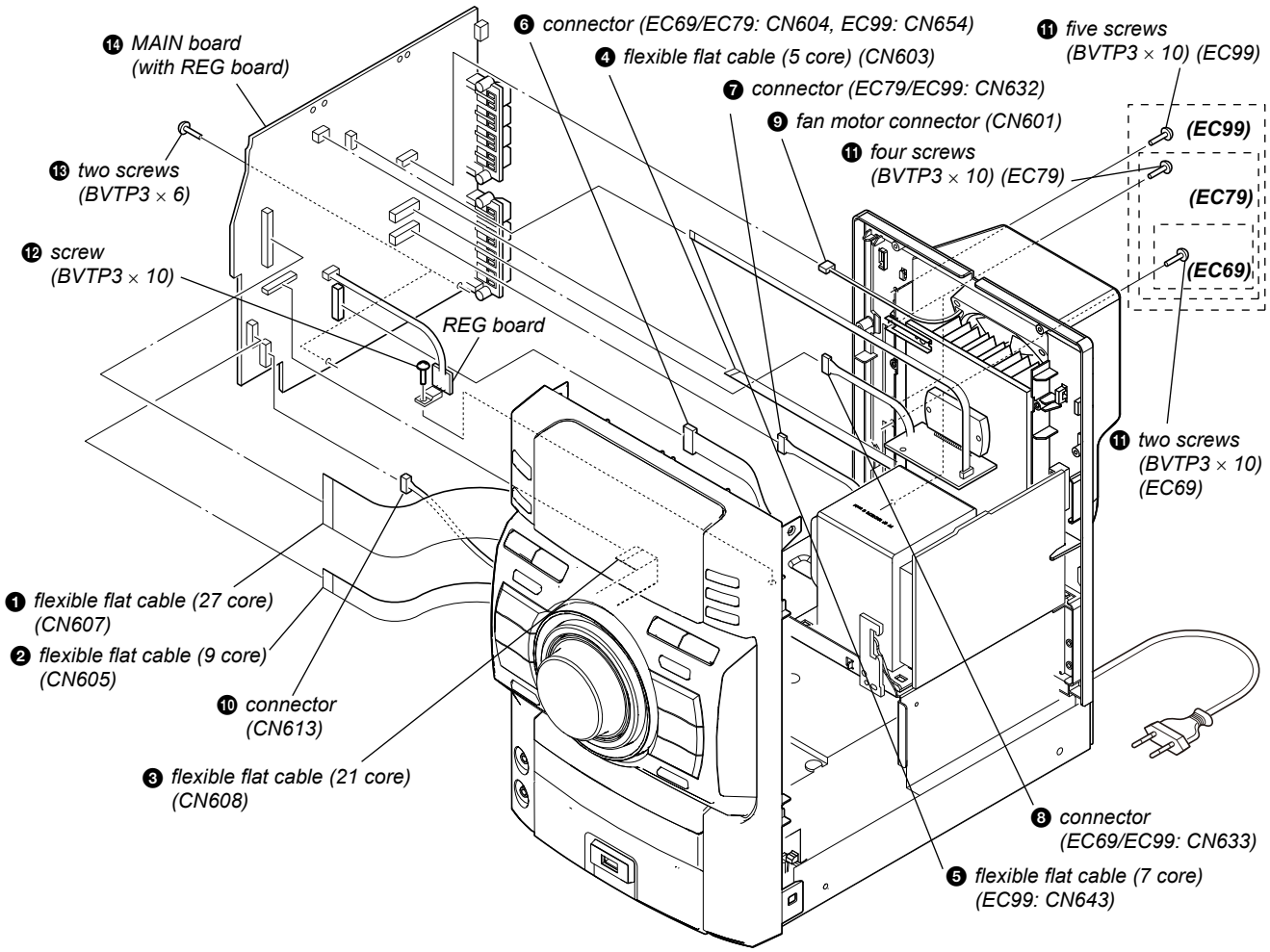

3-5. FRONT PANEL BLOCK

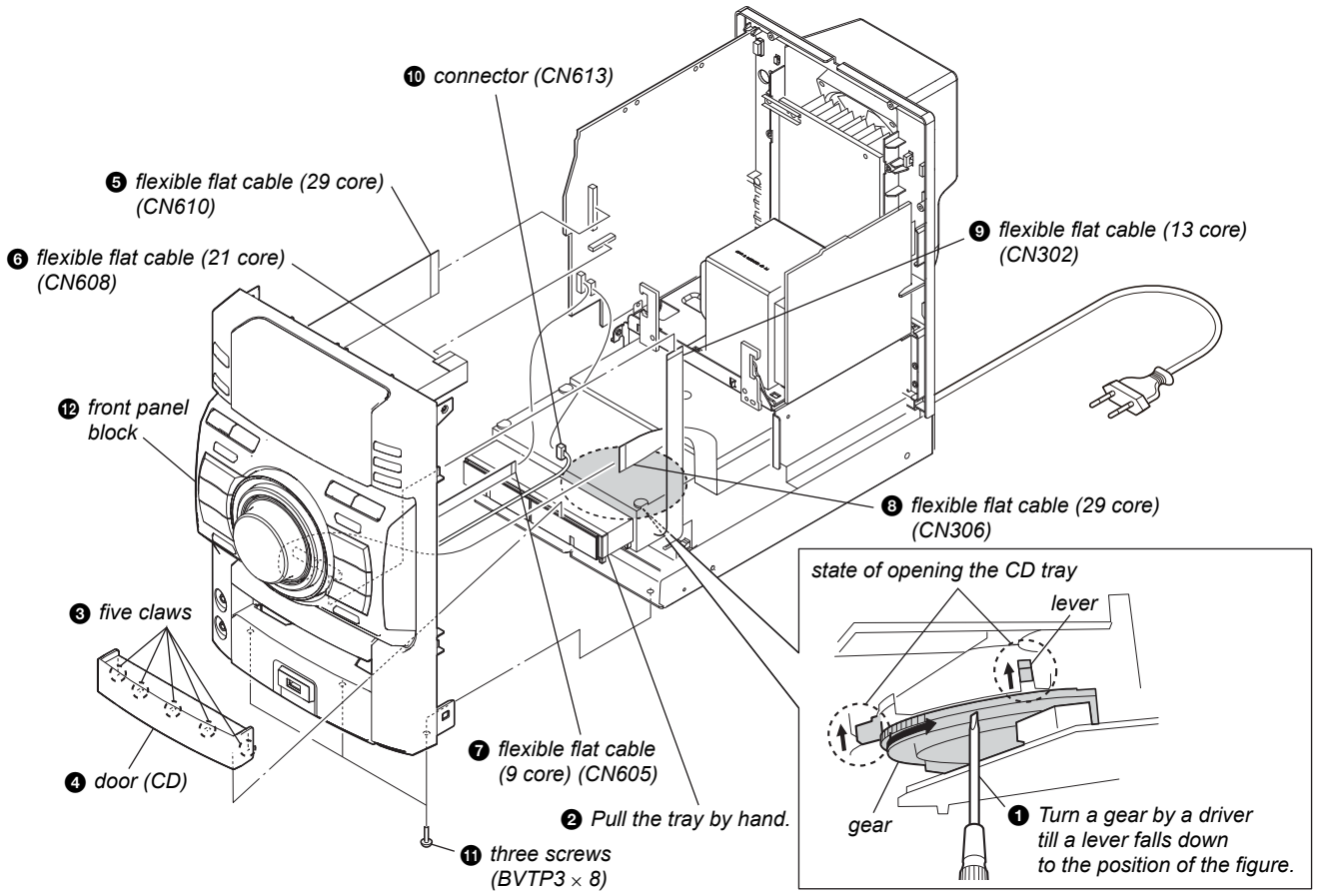

3-6. BACK PANEL BLOCK

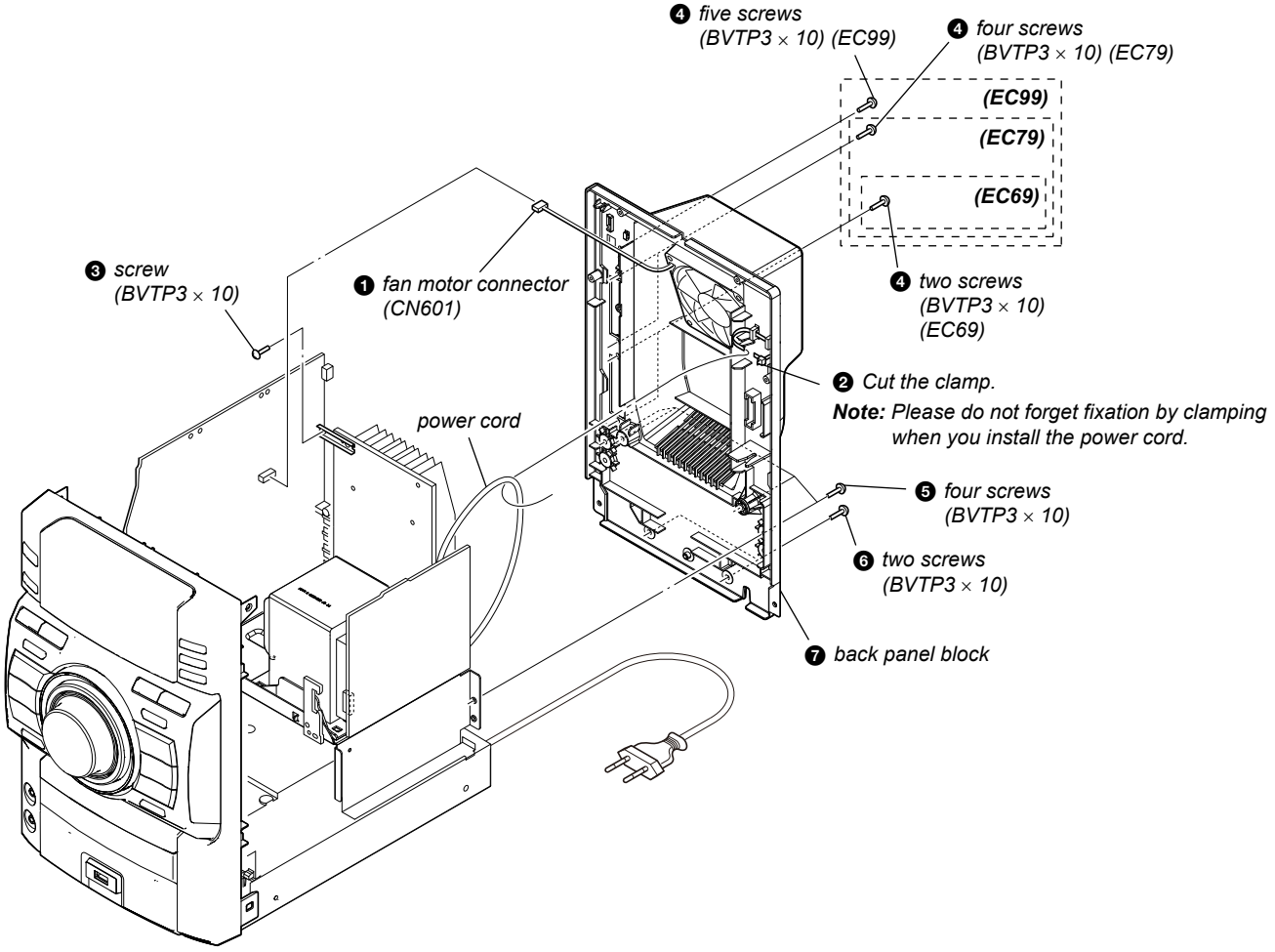

3-7. CD MECHANISM BLOCK

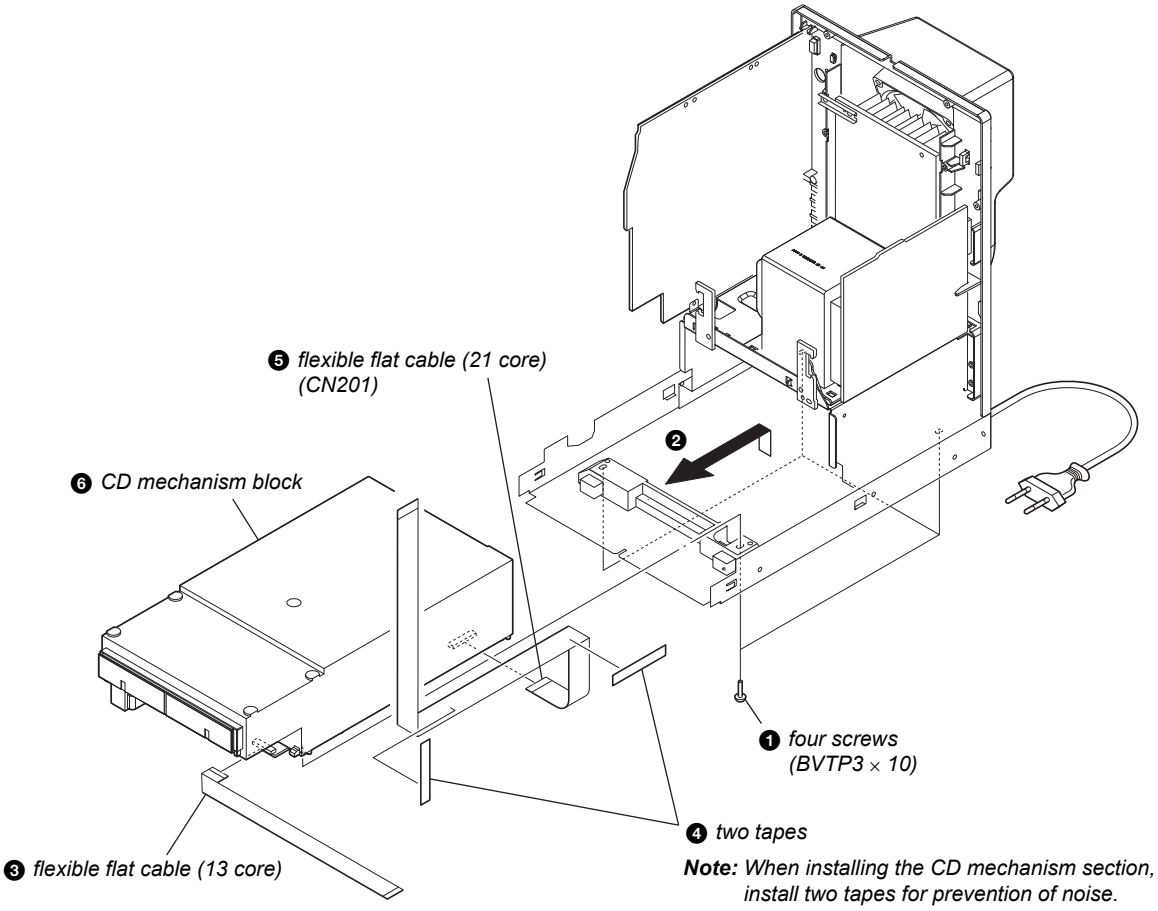

3-8. BASE UNIT

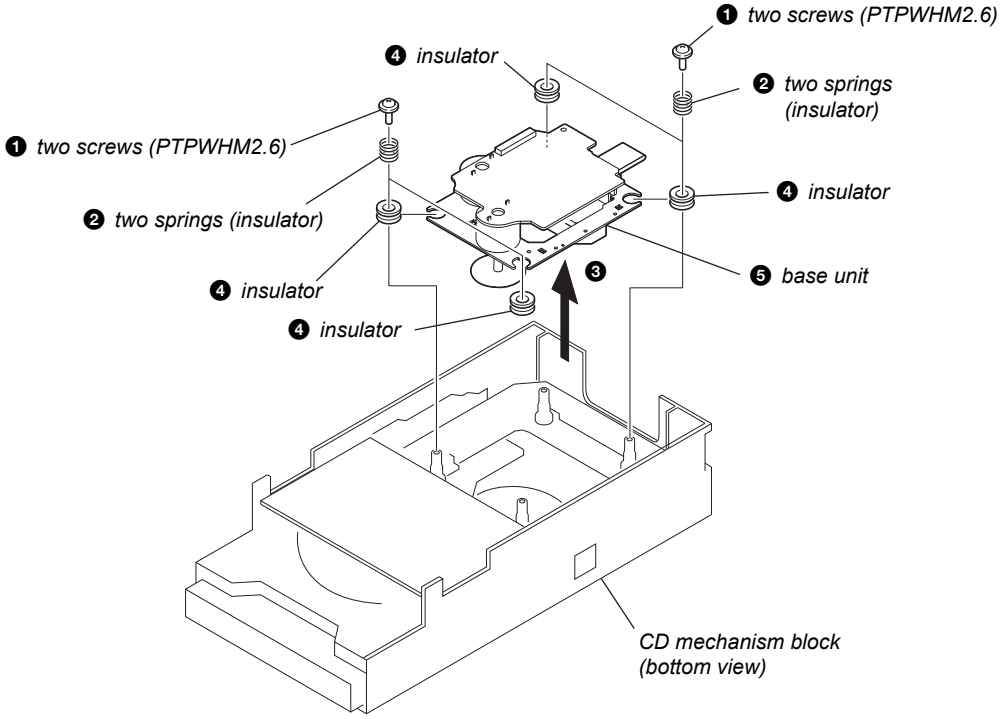

3-9. OP BASE ASSY (KSM-213D)

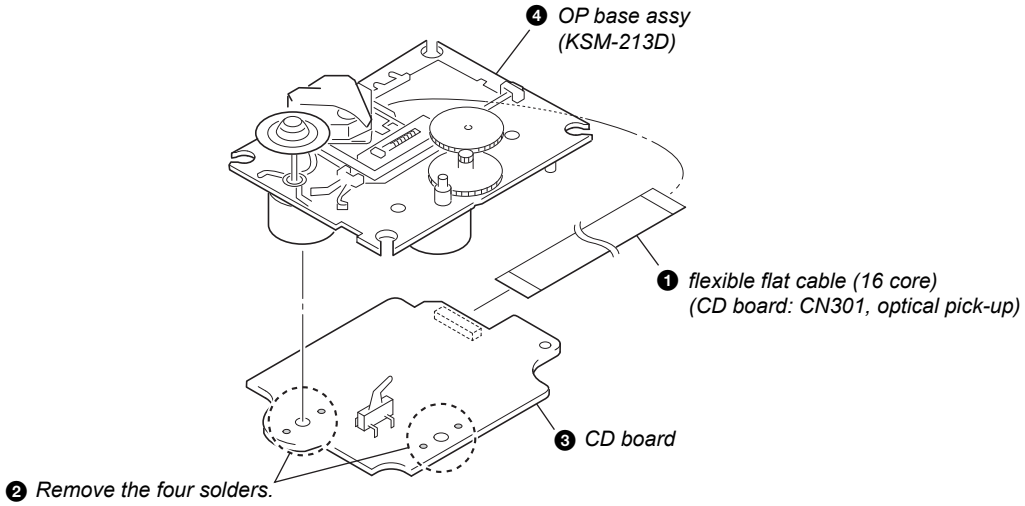

3-10. BELT (DLM3A)

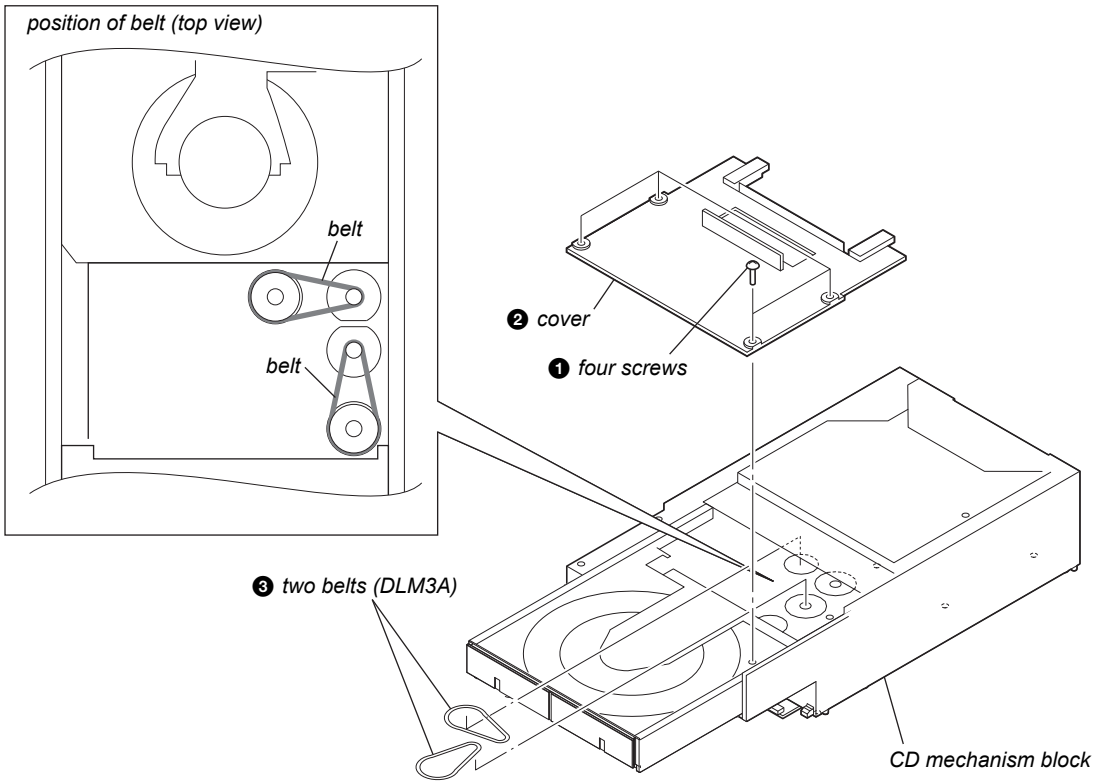

SECTION 4
TEST MODE

COLD RESET

The cold reset clears all data including preset data stored in the memory to initial conditions. Execute this mode when returning the set to the customer.

Procedure:

1. In the standby status, press the [I/⏻] button to turn the power on.
2. Press three buttons of [■], [CD] and [I/⏻] simultaneously.
3. When "RESET" appears, the set enters standby status.

PANEL TEST MODE

Enter The Panel Test Mode

Procedure:

1. In the standby status, press the [I/⏻] button to turn the power on.
2. Press three buttons of [DISPLAY], [■] and [USB] simultaneously.
3. When the panel test mode is activated, LEDs and segments of the liquid crystal display are all turned on.

Version Check

Procedure:

1. In the panel test mode (all LEDs and segments of the liquid crystal display are turned on), press the [FUNCTION] button.
2. On the liquid crystal display, date and version are displayed "xxxxxxxx".
3. From this status, press the [►II] button, and the destination and model name are displayed.
4. To release from this mode, press three buttons of [DISPLAY], [■] and [USB] simultaneously.

Key Test Mode

Procedure:

1. In the panel test mode (all LEDs and segments of the liquid crystal display are turned on), press the [■] button.
2. The message "KEY0 0 0" displayed. Whenever any buttons are pressed and the [VOLUME] dial is turned, the value is changed.
3. To release from this mode, press three buttons of [DISPLAY], [■] and [USB] simultaneously.

CD REPEAT 5 LIMIT CANCEL MODE

Number of repeats for CD playback is 5 times when the repeat mode is "REPEAT". This mode enables CD to repeat playback for limitless times.

Procedure:

1. Press the [I/⏻] button to turn the power on.
2. Press the [FUNCTION] button to select CD function.
3. Press three buttons of [DISPLAY], [■] and [TUNING + ►► ▷▷I] simultaneously.
4. It enters the CD repeat 5 limit cancel mode and displays "NO LIMIT".
5. To release this mode, press the [I/⏻] button to turn the power off.

CD TRAY LOCK

This mode is for the antitheft of CD disc in shop. (not for transport)

Procedure:

1. Press the [I/⏻] button to turn the power on.
2. Press the [FUNCTION] button to select CD function.
3. Insert a disc.
4. While pressing the [■] button, press the [⏏] button for more 5 seconds.
5. The message "LOCKED" is displayed and the disc tray is locked. (Even if releasing from this mode, the disc tray is still locked)
6. If press the [⏏] button to eject the disc, the message "LOCKED" is displayed and can not eject the disc.
7. To release this lock, while pressing the [■] button, press the [⏏] button for 5 seconds again.
8. The message "UNLOCKED" is displayed and the disc tray is unlocked.

CD POWER MANAGE

This mode is for switch the CD power supply on/off. Even if this state pulls out AC plug, it is held.

Procedure:

1. Press the [I/⏻] button to turn the power on.
2. Press the [FUNCTION] button to select CD function.
3. Press the [I/⏻] button again to turn the power off (standby).
4. After pressing the [DISPLAY] button, while pressing the [■] button, press the [I/⏻] button.
5. It turns power on and display "CD/USB", then display "PWR ON" or "PWR OFF".

CHANGE-OVER THE AM TUNING INTERVAL (Except EC69: AEP/EC79: AEP/EC99: AEP models)

The AM tuning interval can be changed over 9 kHz or 10 kHz.

Procedure:

1. Press the [I/⏻] button to turn the power on.
2. Press the [FUNCTION] button to select TUNER (AM) function.
3. Press the [I/⏻] button again to turn the power off (standby).
4. After pressing the [DISPLAY] button, while pressing the [TUNING + ►► ▷▷I] button, press the [I/⏻] button.
5. It turns power on and display "9k STEP" or "10k STEP", and thus the tuning interval is changed over.

CD SHIP MODE

This mode can run the CD sled motor optionally. Use this mode, for instance, when cleaning the optical pick-up.

Procedure:

1. Press the [I/⏻] button to turn the power on.
2. Confirm there is no disc in all trays.
3. Press the [FUNCTION] button to select CD function.
4. Press two buttons of [►II] and [I/⏻] simultaneously.
5. Set to the CD ship mode (chucking on).
6. After blink "STANDBY", "LOCK" is displayed, disconnect the AC plug.

CD SHIP AND COLD RESET

Procedure:

1. Press the [I/⏻] button to turn the power on.
2. Confirm there is no disc in all trays.
3. Press the [FUNCTION] button to select CD function.
4. Press three buttons of [CD], [– TUNING I◁◁ ◄◄] and [I/⏻] simultaneously.
5. After blink "STANDBY", "RESET" is displayed, disconnect the AC plug.

CD SERVO TEST MODE

This mode can check the servo system operations of the optical pick-up system (= optical unit + CD board).

Note 1: Do not enter the this mode while any other test mode is in progress.

Note 2: Do not enter any other test mode while the this mode is in progress.

How to Enter the CD Servo Test Mode

Procedure:

1. Press the [I/⏻] button to turn the power on.
2. Press the [FUNCTION] button to select CD function.
3. Press three buttons of [▶II], [TUNING + ▶▶ ▷▷I] and [I/⏻] simultaneously.
4. It enters the CD servo test mode and displays “BDT S CU”.

How to Exit from the CD Servo Test Mode

Procedure:

1. Press three buttons of [▶II], [TUNING + ▶▶ ▷▷I] and [I/⏻] simultaneously.
2. It releases from the CD Servo Test Mode and returns to the ordinary CD function.

Key Operation:

[🗀 +], [🗀 –]:

Use these keys to move between the five modes contained in the CD Servo Test Mode, that are the S-Curve Mode, the RAM Read Mode, the RAM Write Mode, the Command Out Mode and the Error Rate Mode as described below. Also, use these keys to move between the menus within the respective five modes. When [🗀 +] is pressed, the screen advances to the next menu or to the next mode. When [🗀 –] is pressed, the screen returns back to the previous menu or to the previous mode. Use these keys also to increase or decrease the numeric value when changing the numeric value. Pressing [🗀 +] increases the value and pressing [🗀 –] decreases the value.

[DSGX], [USB]:

Use these keys to move between the different layers of the hierarchy of the CD Servo Test Mode shown below. Press [DSGX] to move down to the lower layer, and press [USB] to move up to the higher layer.

[TUNING + ▶▶ ▷▷I], [– TUNING I◁◁ ◀◀]:

Use these keys to move the cursor to the right digit or to the left digit in the six-digit number, when changing the numeric value.
Press [TUNING + ▶▶ ▷▷I] to move the cursor to the right, and press [– TUNING I◁◁ ◀◀] to return the cursor to the left.

[FUNCTION]:

Use this key to execute Command Out in the Command Out Mode.

CD Servo Test Mode Tree:

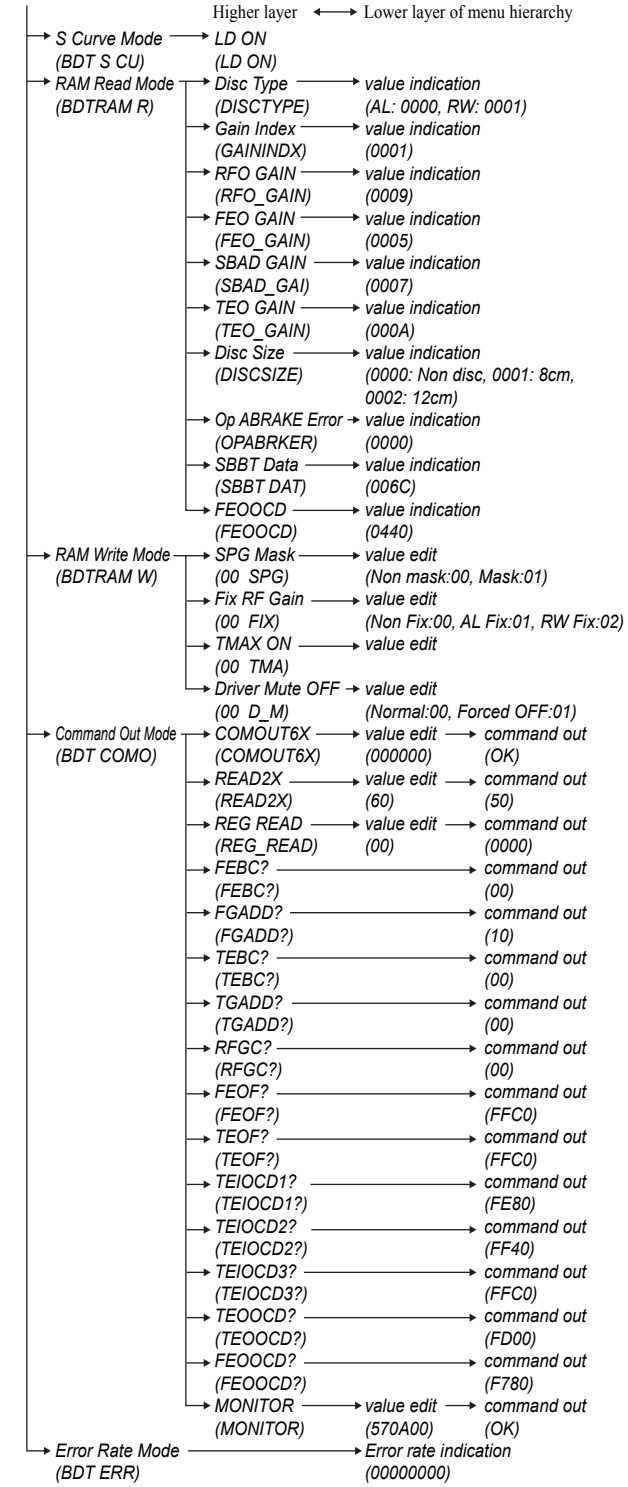

CD SERVICE MODE

This mode can move the SLED of the optical pick-up, and also can turn the optical pick-up laser power on and off.

Procedure:

1. Press the [I/⏻] button to turn the power on.
2. Press three buttons of [▶II], [🗀+] and [I/⏻] simultaneously.
3. Press the [FUNCTION] button to select CD function.
4. It enters the CD service mode and displays "SERVICE".
5. To release from this mode, press three buttons of [▶II], [🗀+] and [I/⏻] simultaneously.

Key Operation:

[TUNING + ▶▶ ▷▷I], [– TUNING I◁◁ ◀◀]:

Use these keys to move the SLED. When [TUNING + ▶▶ ▷▷I] is pressed in this mode, the SLED moves to outer circumference and the message "SLED OUT" is displayed.

When [– TUNING I◁◁ ◀◀] is pressed in this mode, the SLED moves to inner circumference and the message "SLED IN" is displayed.

[CD]:

Use this key to turn the optical pick-up laser power on and off. When the laser power is turned on, the message "LD ON" is displayed. When the laser power is turned off, the message "LD OFF" is displayed.

CD ERROR CODE

The past errors of the CD mechanism (CDM) are displayed as the CDM Errors, and those of the optical pick-up system (= optical unit + CD board) are displayed as the BD Errors as shown below.

Procedure:

1. Press the [I/⏻] button to turn the power on.
2. Press the [FUNCTION] button to select CD function.
3. Press three buttons of [🗀+], [■] and [DISPLAY] simultaneously.
4. Then, the CDM error code is displayed as "M0xxxxxx" (x means hexadecimal number) on the liquid crystal display as shown below.
5. Every pressing of the [TUNING + ▶▶ ▷▷I] button in this mode increments the number after "M" starting from "M0" up to "M9", and then returns to "M0". Every pressing of the [– TUNING I◁◁ ◀◀] button in this mode decrements the number after "M". The smaller the error code number is, the newer the error content is.
6. When the [CD] button is pressed then, the BD error code is displayed as "D0xxxxxx" (x means hexadecimal number) on the liquid crystal display as shown below. In the same way as the CDM error code, use of the [TUNING + ▶▶ ▷▷I] and the [– TUNING I◁◁ ◀◀] buttons in this mode enables tracing of the error history.
7. To release from this mode, press the [I/⏻] button to turn the power off.

Contents of "CDM Errors"

Error display example

M 0 FF 11 42
① ② ③ ④

① It indicates the error history number
0 to 9: The error code number 0 indicates the newest error.

② It indicates whether the CDM error occurs in the normal operations or during the initialization operation.
FF : The error has occurred in the normal operations.
Other than FF: The error has occurred during the initialization operation.

③ It indicates the processing during which the trouble has occurred.
01: The disc EJECT processing is in progress.
02: The disc INSERTION-WAITING processing is in progress.
03: Processing of the disc INSERTION-REQUEST for the upper CD tray is in progress.
04: Processing of the disc EJECTION-REQUEST for the upper CD tray is in progress.
05: The disc pulling-in operation is in progress.
06: The disc chucking processing is in progress.
07: The disc re-chucking processing is in progress.
08: The disc chucking-release completion operation is in progress.

④ It indicates the operation during which the trouble has occurred.
00 : Waiting for the operation.
10 to 13 : The disc EJECT operation is in progress.
20 : The disc pulling-in operation is in progress.
30 : The disc chucking-release operation is in progress.
40 to 43 : The disc EJECT operation due to error is in progress.

Contents of "BD Errors"

Error display example

D 0 02 09 01
① ② ③ ④

① It indicates the error history number
0 to 9: The error code number 0 indicates the newest error.

② It indicates the error content
01: The focus servo cannot lock-in.
02: GFS is no good (NG).
03: The startup time exceeds the specified period of time (time over)
04: The focus servo is unlocked continuously.
05: Q code cannot be obtained within the specified period of time.
06: The tracking servo cannot lock-in.
07: Blank disc

③ It indicates the on-going processing of optical pick-up system (= optical unit + BD board) when the trouble has occurred.
01: The CD SHIP mode processing is in progress.
02: The POWER OFF processing is in progress.
03: The INITIALIZE processing is in progress.
04: The optical pick-up system (= optical unit + CD board) is in the stop state.
05: The STOP operation is in progress.
06: The startup processing is in progress.
07: The TOC read-in processing is in progress.
08: The SEARCH operation is in progress.
09: The PLAY operation is in progress.
0A: The PAUSE operation is in progress.
0B: The PLAY – MANUAL SEARCH operation is in progress.
0C: The PAUSE – MANUAL SEARCH operation is in progress.

④ It indicates the operation that is being processed when the trouble has occurred.
It indicates the step number of each processing specified by ③.
Because the numbers of steps are different in each processing, this number is different in each processing.

CD FACTORY MODE

Note1: Do not enter the this mode while any other testmode is in progress.
Note2: Do not enter any other test mode while the this mode is in progress.

Procedure:

1. Press the [I/⏻] button to turn the power on.
2. Press the [FUNCTION] button to select CD function
3. Press three buttons of [▶II], [USB] and [I/⏻] simultaneously.
4. It enters the CD factory mode and the message "FACTORY" is displayed. When the [CD] button is pressed four times, the following message (initial display) is displayed.

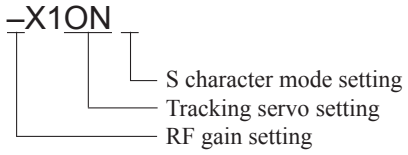

Key Operation:

[CD]:

The display changes in the following order whenever the button is pressed.

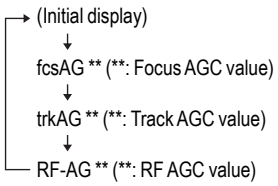

[DSGX]:

RF gain setting changes whenever the button is pressed.
"–": No gain fixation.
"AL": Fix to the gain for AL disc.
"RW": Fix to the gain for RW disc.

[USB]:

Tracking servo setting changes whenever the button is pressed.
"ON": Tracking servo ON.
"OFF": Tracking servo OFF.

[FUNCTION]:

S character mode setting changes whenever the button is pressed.
" ": S character mode OFF.
"S": S character mode ON.

5. To release from this mode, press three buttons of [▶II], [USB] and [I/⏻] simultaneously.

SECTION 5
ELECTRICAL ADJUSTMENTS

CD SECTION

Note:
1. CD Block is basically constructed to operate without adjustment.
2. Use YEDS-18 disc (Part No. 3-702-101-01) unless otherwise indicated.
3. Use an oscilloscope with more than 10 MΩ impedance.
4. Clean the object lens by an applicator with neutral detergent when the signal level is low than specified value with the following checks.
5. Check the focus bias check when optical pick-up block is replaced.

FOCUS BIAS CHECK

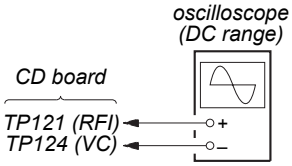

Procedure :
1. Connect the oscilloscope to TP121 (RFI) and TP124 (VC) on the CD board.
2. Press the [I/⏻] button to turn the power on, and press the [FUNCTION] button to select CD function.
3. Set disc (YEDS-18) and press the [▶II] button to playback.
4. Confirm that oscilloscope waveform is as shown in the figure below (eye pattern).
   A good eye pattern means that the diamond shape (◊) in the center of the waveform can be clearly distinguished.

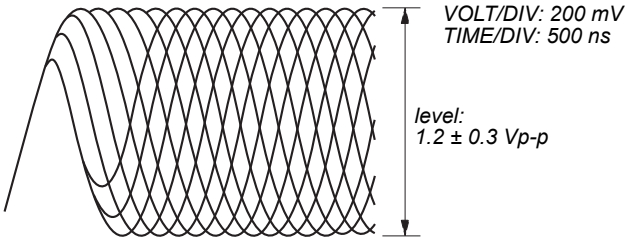

Checking Location:
– CD Board (Conductor Side) –

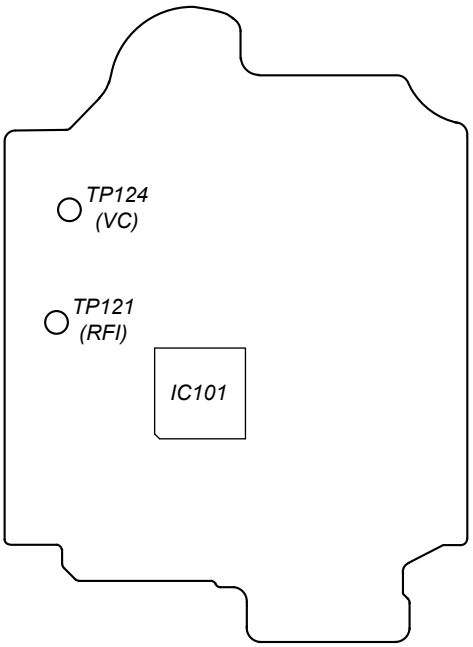

TUNER SECTION

0 dB = 1 μV

Adjustment Location: MAIN board (See page 19)

[AM]
Setting:
FUNCTION: AM

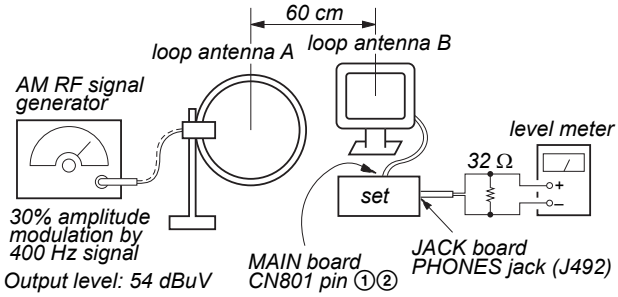

[FM]
Setting:
FUNCTION: FM

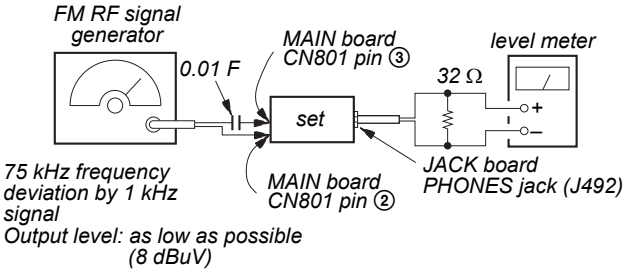

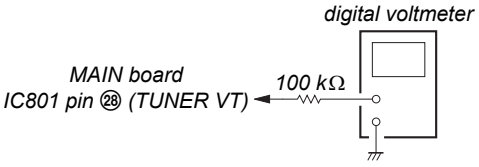

- Repeat the procedures in each adjustment several times.

( ): EC69: AEP/EC79: AEP/EC99: AEP models

AM FREQUENCY COVERAGE CONFIRMATION	
Frequency Display	Reading on Digital Voltmeter
530 kHz (531 kHz)	1.45 ± 0.3 V
1,710 kHz (1,602 kHz)	7.7 ± 0.5 V (7.2 ± 0.5 V)

( ): EC69: AEP/EC79: AEP/EC99: AEP models

AM TRACKING ADJUSTMENT	
Adjust for a maximum reading on level meter	
L805	530 kHz (531 kHz)

FM FREQUENCY COVERAGE ADJUSTMENT		
Adjustment Part	Frequency Display	Reading on Digital Voltmeter
L803	87.5 kHz	1.75 ± 0.1 V
Confirmation	108 kHz	6.2 ± 0.5 V

FM TRACKING ADJUSTMENT	
Adjust for a minimum reading on level meter	
L804	98 MHz

FM DETECTOR ADJUSTMENT

Setting:

FUNCTION: FM

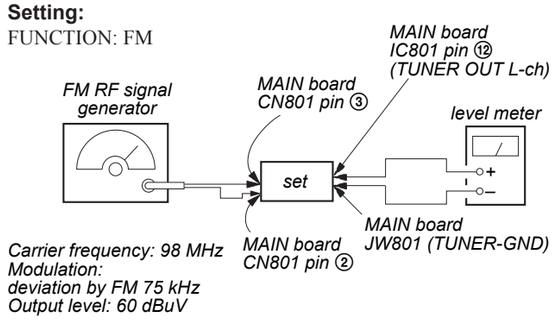

1. Turn the set to 98 MHz.
2. Adjust L802 so that modulation distortion may become the best in the vicinity of the maximum value where the tuner out level becomes –15 dBuV or more.

FM AUTO STOP CHECK

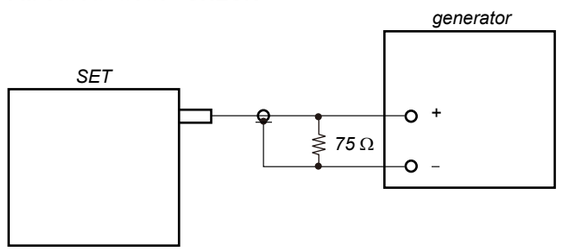

Procedure :

1. Turn the power on.
2. Input the following signal from Signal Generator to FM antenna input directly.

Carrier frequency : A = 87.5 MHz, B = 98 MHz, C = 108 MHz
Deviation : 75 kHz
Modulation : 1 kHz
ANT input : 35 dBu (EMF)

Note: Please use 75 ohm "coaxial cable" to connect SG and the set. You cannot use video cable for checking.
Please use SG whose output impedance is 75 ohm.

3. Set to FM tuner function and scan the input FM signal with automatic scanning.
4. Confirm that input Frequency of A, B and C detected and automatic scanning stops.

The stop of automatic scanning means "The station signal is received in good condition".

Adjustment Location and Connecting Points:

– MAIN Board (Component Side) –

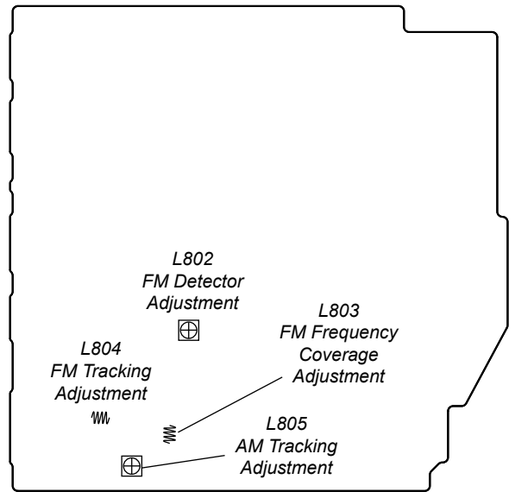

– MAIN Board (Conductor Side) –

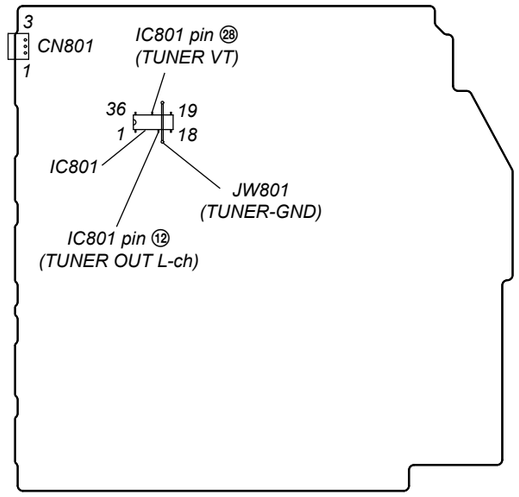

SECTION 6
DIAGRAMS

6-1. BLOCK DIAGRAM - CD, TUNER Section -

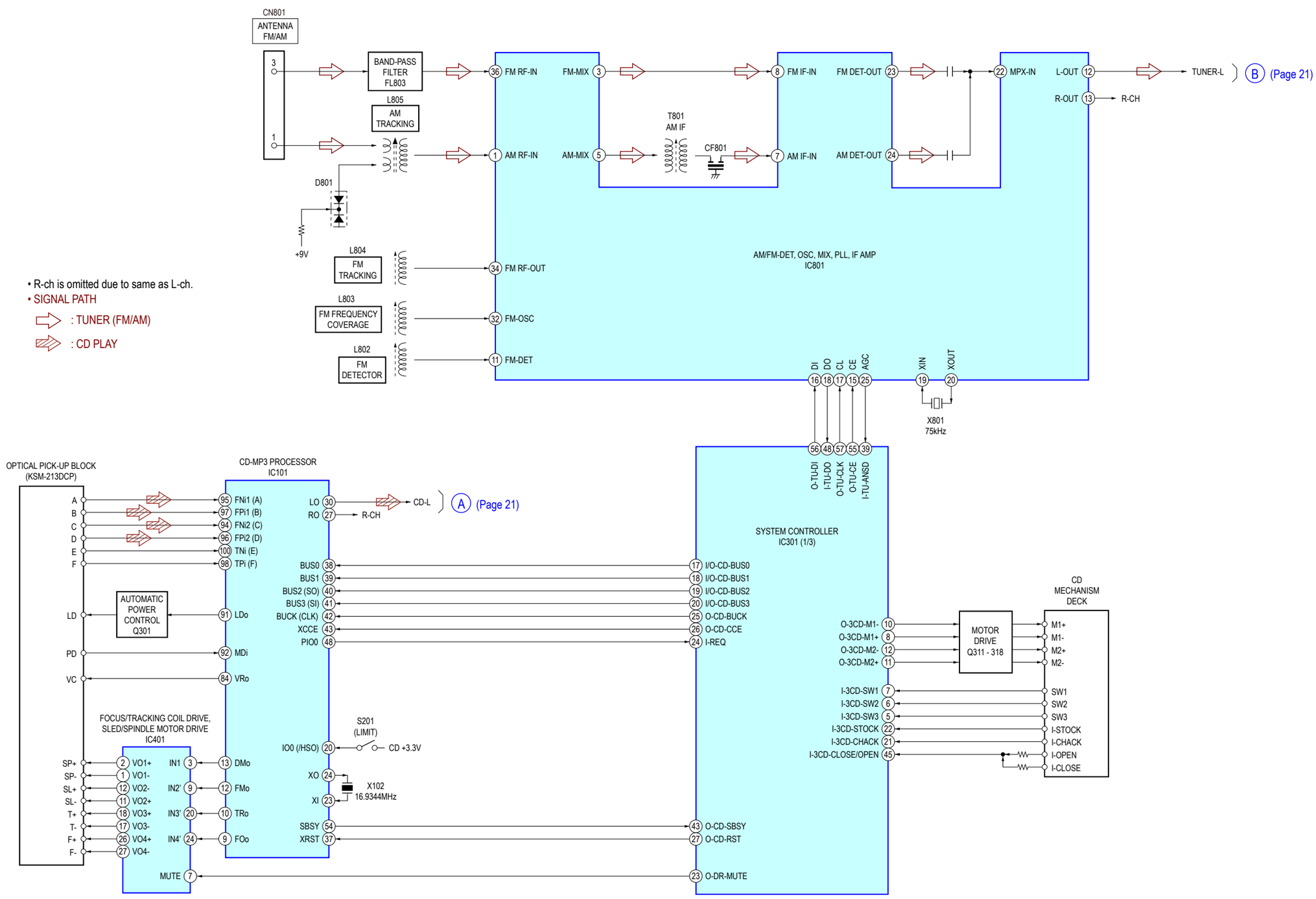

6-2. BLOCK DIAGRAM - MAIN Section -

- R-ch is omitted due to same as L-ch.
- SIGNAL PATH

: TUNER (FM/AM)
: CD PLAY
: USB
: PC IN

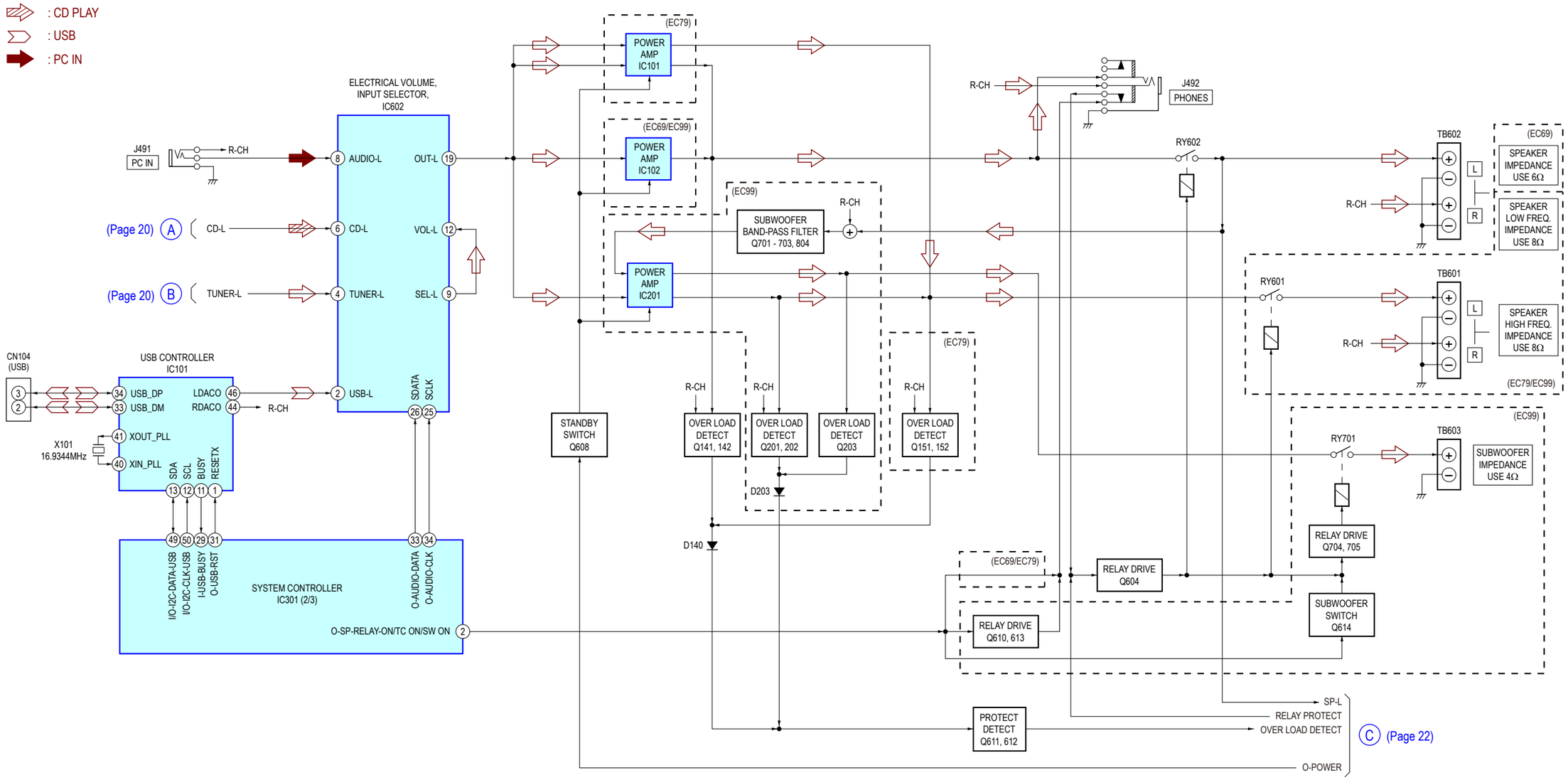

6-3. BLOCK DIAGRAM - PANEL, POWER SUPLLY Section -

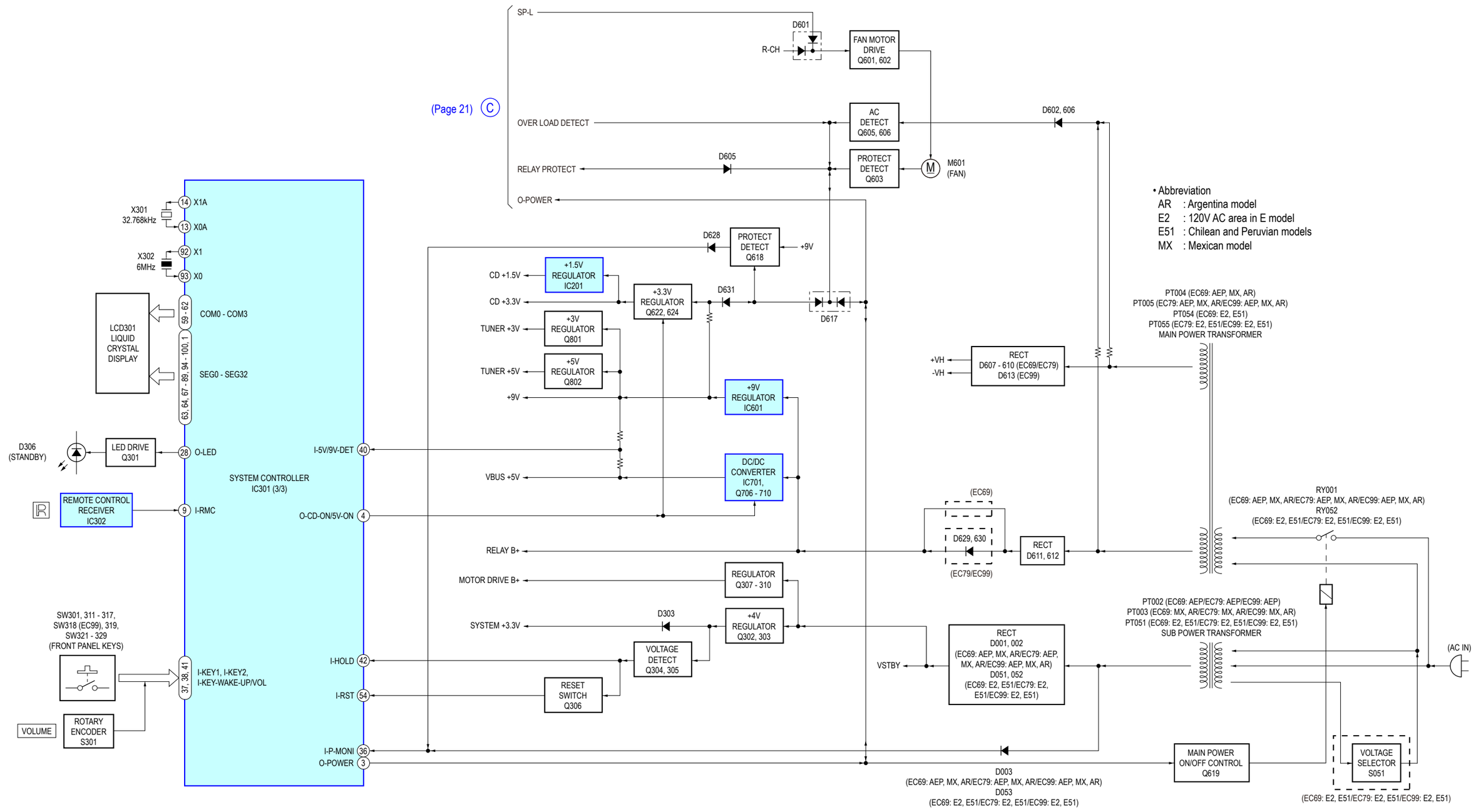

THIS NOTE IS COMMON FOR PRINTED WIRING BOARDS AND SCHEMATIC DIAGRAMS. (In addition to this, the necessary note is printed in each block.)

For Printed Wiring Boards.

Note:

- ○——: parts extracted from the component side.
- ——: parts extracted from the conductor side.
- ⊡←: indicates side identified with part number.
- ▬: Pattern from the side which enables seeing. (The other layers' patterns are not indicated.)

Caution:

Pattern face side: (Conductor Side)	Parts on the pattern face side seen from the pattern face are indicated.
Parts face side: (Component Side)	Parts on the parts face side seen from the parts face are indicated.

- Indication of transistor.

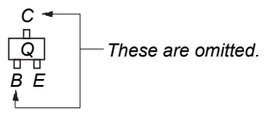

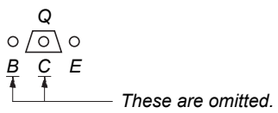

- Abbreviation
  AR : Argentina model
  E2 : 120V AC area in E model
  E51 : Chilean and Peruvian models
  MX : Mexican model

For Schematic Diagrams.

Note:

- All capacitors are in μF unless otherwise noted. (p: pF) 50 WV or less are not indicated except for electrolytics and tantalums.
- All resistors are in Ω and 1/4 W or less unless otherwise specified.
- △ : internal component.
- ▭: nonflammable resistor.
- ▭: panel designation.

Note: The components identified by mark ⚠ or dotted line with mark ⚠ are critical for safety.
Replace only with part number specified.

- ▬: B+ Line.
- ▬: B– Line.
- ▭: adjustment for repair.
- Voltages and waveforms are dc with respect to ground under no-signal (detuned) conditions.

– CD Board –
no mark: CD PLAY
– Other Boards –
no mark: TUNER (FM/AM)

- Voltages are taken with VOM (Input impedance 10 MΩ). Voltage variations may be noted due to normal production tolerances.
- Waveforms are taken with a oscilloscope. Voltage variations may be noted due to normal production tolerances.
- Circled numbers refer to waveforms.
- Signal path.
  ⇨ : TUNER (FM/AM)
  ⇨ : CD PLAY
  ⇨ : USB
  ➡ : PC IN
- Abbreviation
  AR : Argentina model
  E2 : 120V AC area in E model
  E51 : Chilean and Peruvian models
  MX : Mexican model

- **Circuit Boards Location**

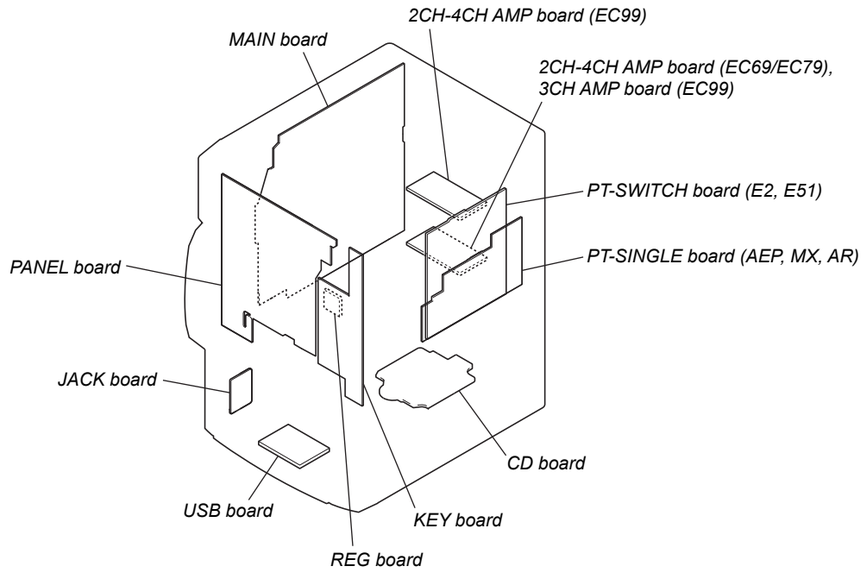

6-4. PRINTED WIRING BOARD - CD Board -

• See page 23 for Circuit Boards Location. • : Uses unleaded solder.

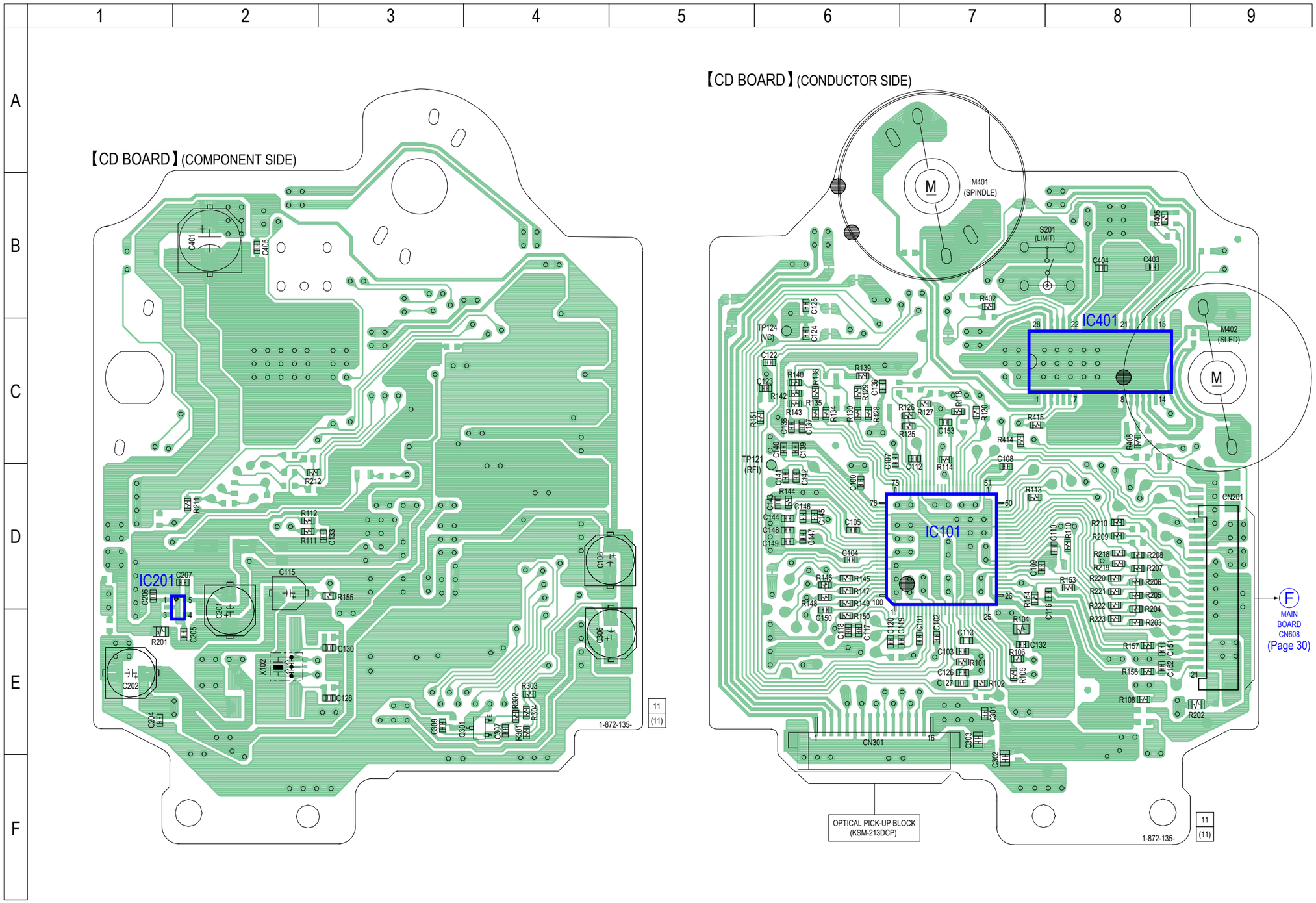

6-5. SCHEMATIC DIAGRAM - CD Board -

• See page 26 for Waveforms. • See page 38 for IC Block Diagrams. • See page 39 for IC Pin Function Description.

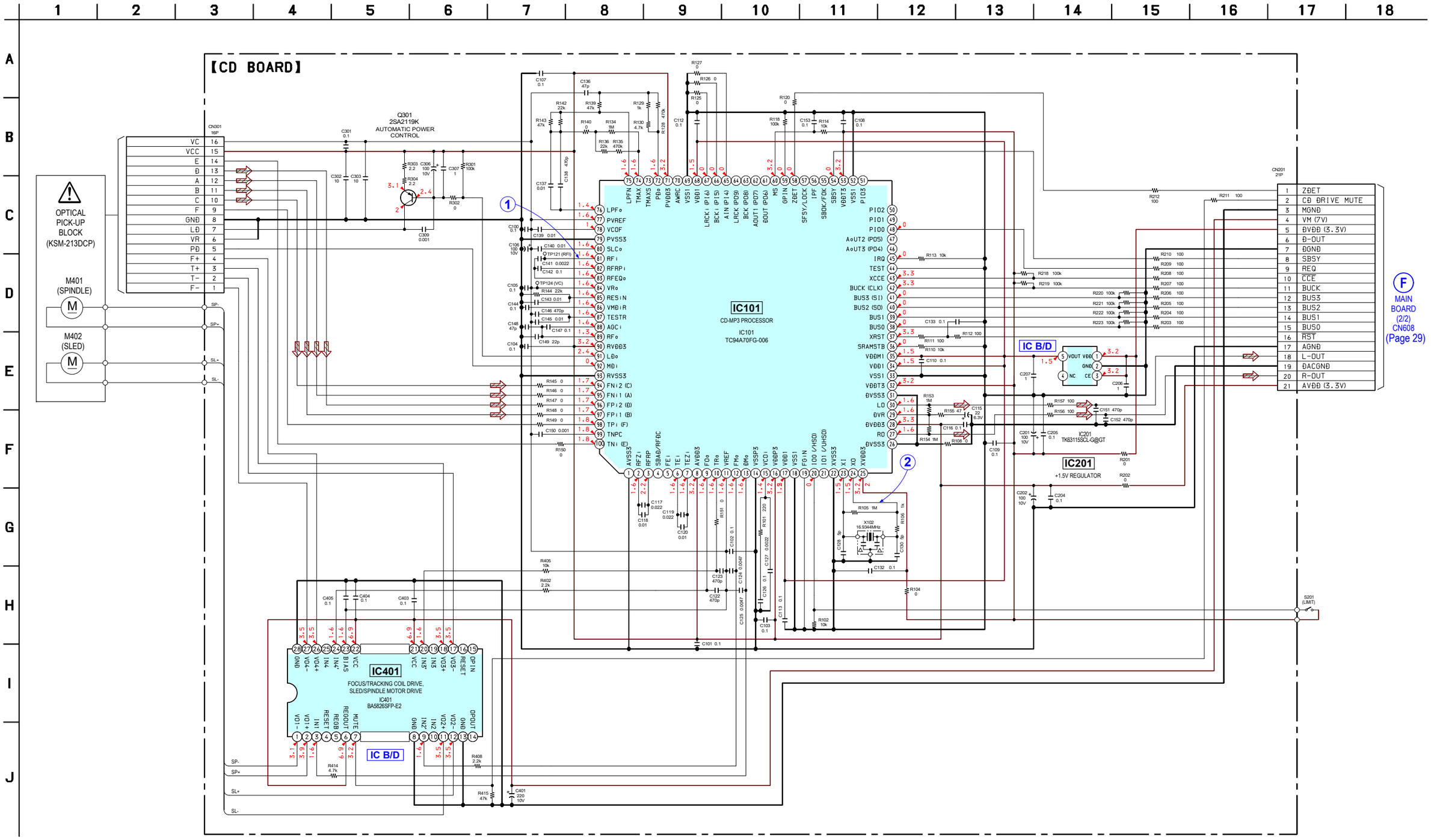

• **Waveforms**

– CD Board –

① **IC101 ㊶ (RFi) (CD play mode)**

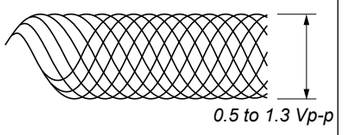

200 mV/DIV, 500 ns/DIV

② **IC101 ㉔ (XO) (CD play mode)**

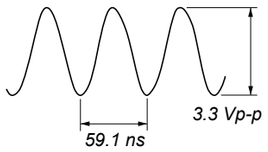

1 V/DIV, 20 ns/DIV

– USB Board –

⑪ **IC101 ㊶ (XOUT_PLL)**

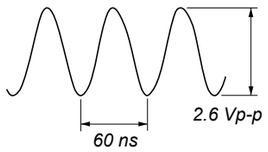

1 V/DIV, 20 ns/DIV

– MAIN Board –

㉑ **IC801 ⑳ (XOUT)**

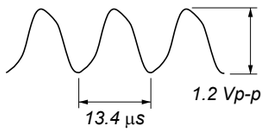

500 mV/DIV, 5 µs/DIV

– PANEL Board –

㉛ **IC301 ⑭ (X1A)**

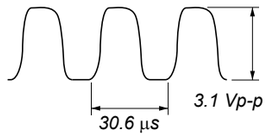

1 V/DIV, 10 µs/DIV

㉜ **IC301 ⑫ (X1)**

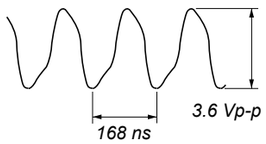

1 V/DIV, 100 ns/DIV

6-6. PRINTED WIRING BOARD - USB Board -

• See page 23 for Circuit Boards Location. • : Uses unleaded solder.

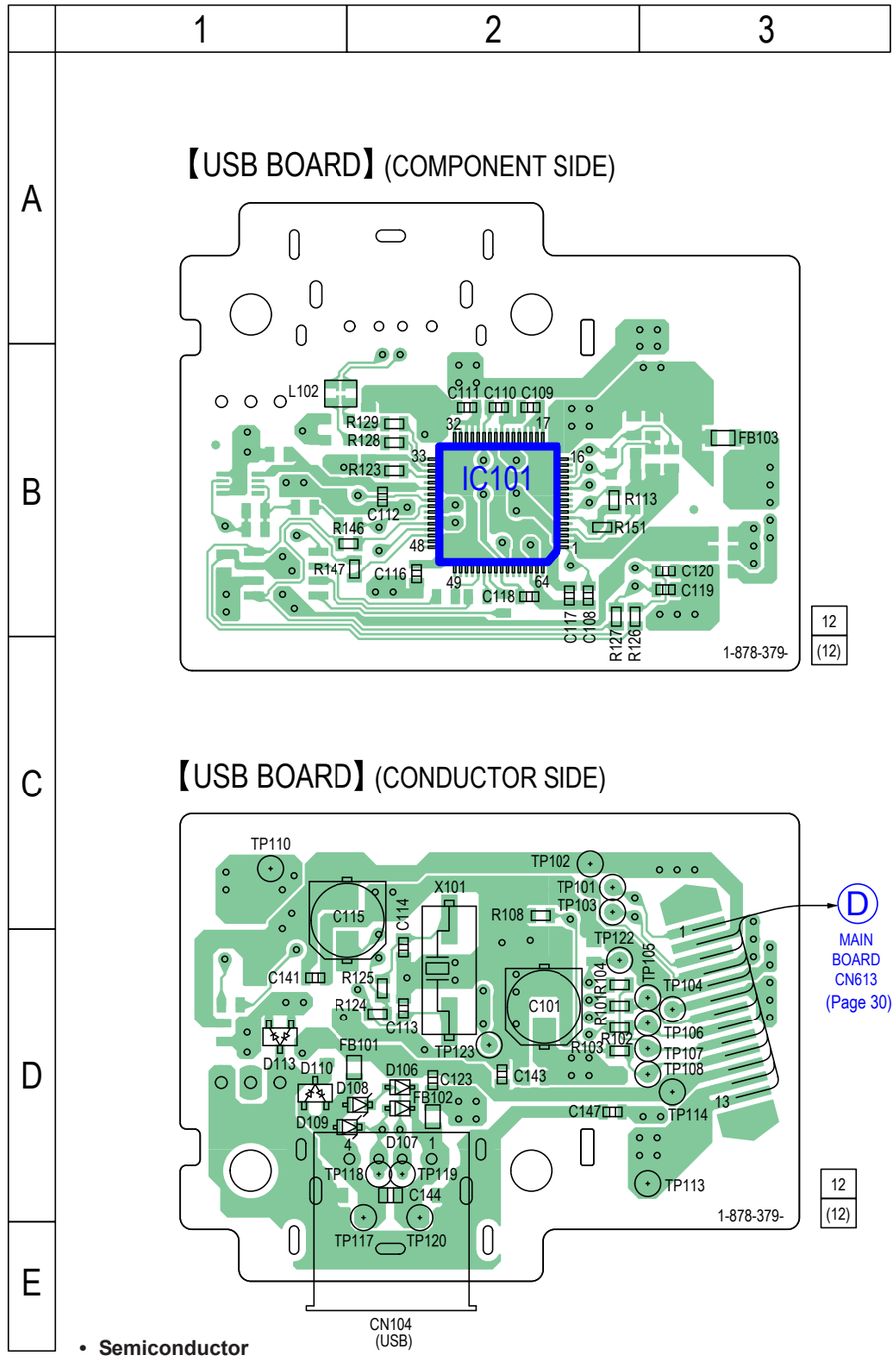

• **Semiconductor Location**

Ref. No.	Location
D106	D-2
D107	D-2
D108	D-2
D109	D-2
D110	D-1
D113	D-1
IC101	B-2

6-7. SCHEMATIC DIAGRAM - USB Board -

• See page 26 for Waveforms. • See page 39 for IC Pin Function Description.

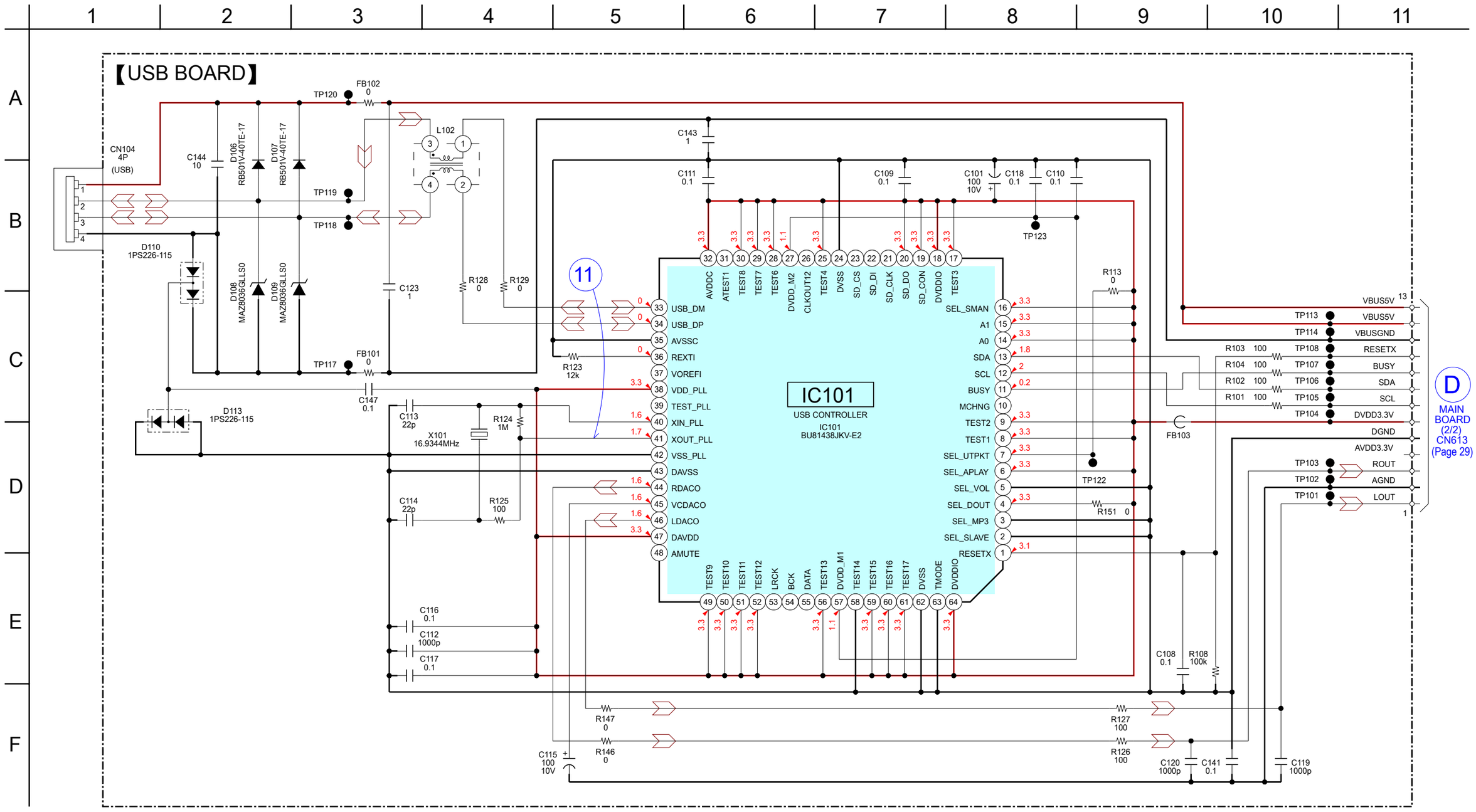

6-8. SCHEMATIC DIAGRAM - MAIN Board (1/2) - • See page 38 for IC Block Diagrams.

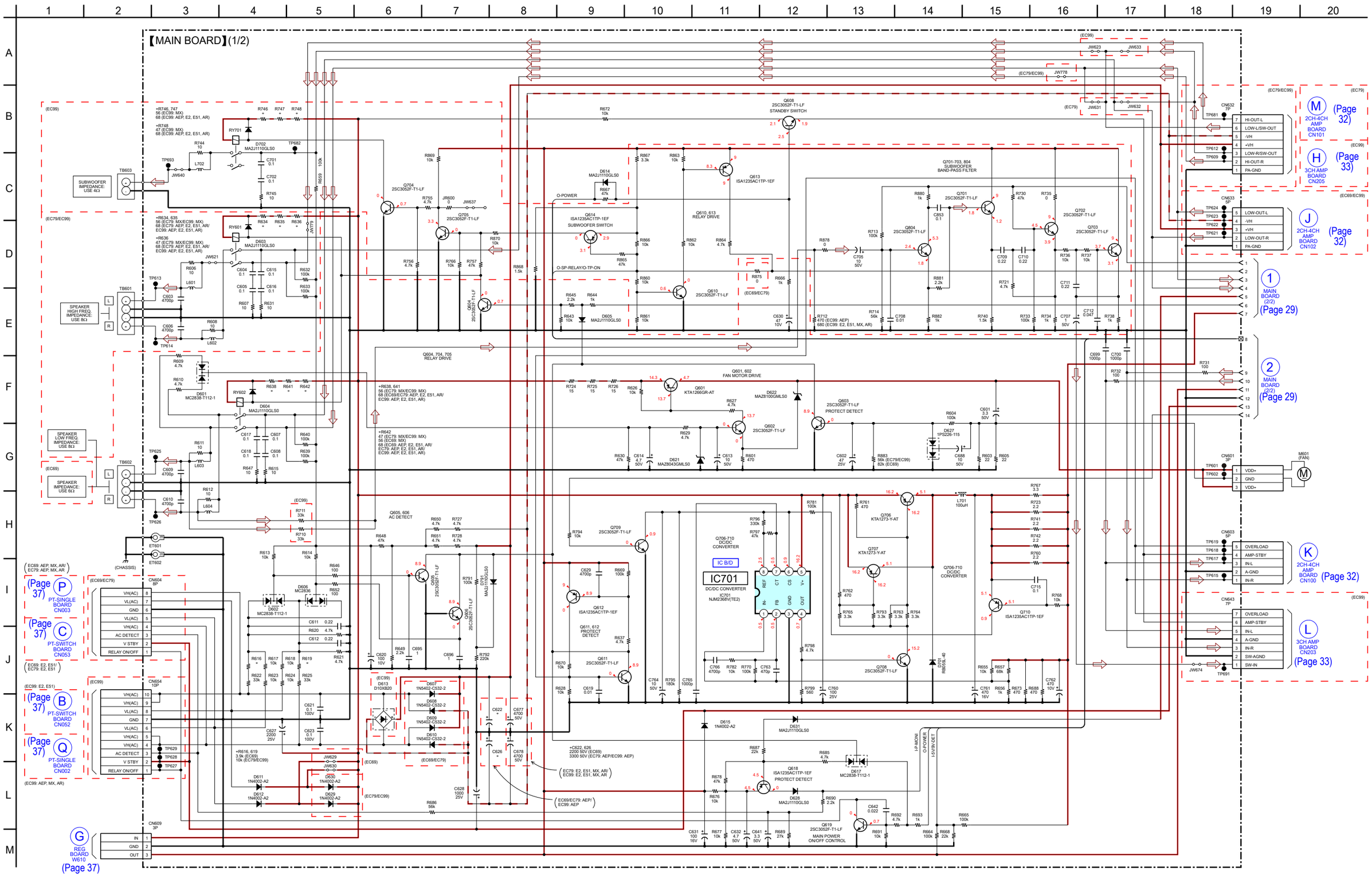

6-9. SCHEMATIC DIAGRAM - MAIN Board (2/2) -

• See page 26 for Waveforms. • See page 38 for IC Block Diagrams.

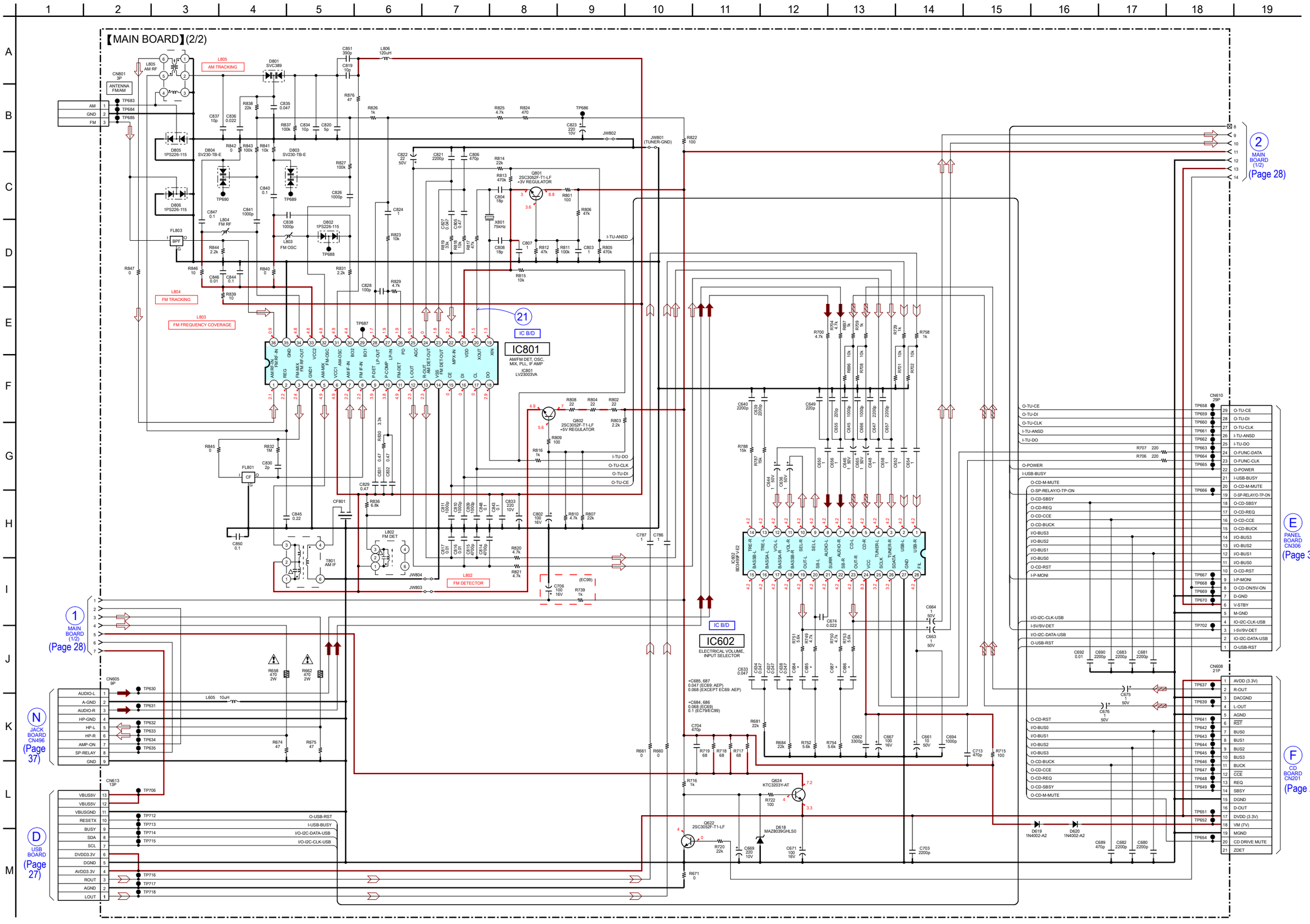

6-10. PRINTED WIRING BOARD - MAIN Board -

• See page 23 for Circuit Boards Location. • : Uses unleaded solder.

• **Semiconductor Location**

Ref. No.	Location
D601	E-3
D602	F-6
D603	E-3
D604	G-4
D605	E-5
D606	E-6
D607	G-5
D608	G-5
D609	G-5
D610	G-5
D611	H-6
D612	H-6
D613	G-6
D614	C-5
D615	E-7
D617	E-6
D618	E-7
D619	F-7
D620	F-7
D621	D-5
D622	D-5
D627	D-5
D628	E-7
D629	H-6
D630	H-6
D631	E-7
D701	H-7
D702	E-4
D791	E-5
D801	B-4
D802	B-4
D803	B-4
D804	B-3
D805	B-2
D806	B-2
IC602	C-7
IC701	G-7
IC801	C-4
Q601	D-5
Q602	D-5
Q603	E-5
Q604	G-4
Q605	E-6
Q606	E-6
Q608	C-6
Q610	F-4
Q611	E-6
Q612	E-6
Q613	F-4
Q614	G-4
Q618	E-7
Q619	H-6
Q622	F-7
Q624	E-7
Q701	D-7
Q702	D-7
Q703	D-6
Q704	F-4
Q705	F-4
Q706	H-7
Q707	H-7
Q708	G-7
Q709	G-7
Q710	H-7
Q801	B-5
Q802	B-5
Q804	D-6

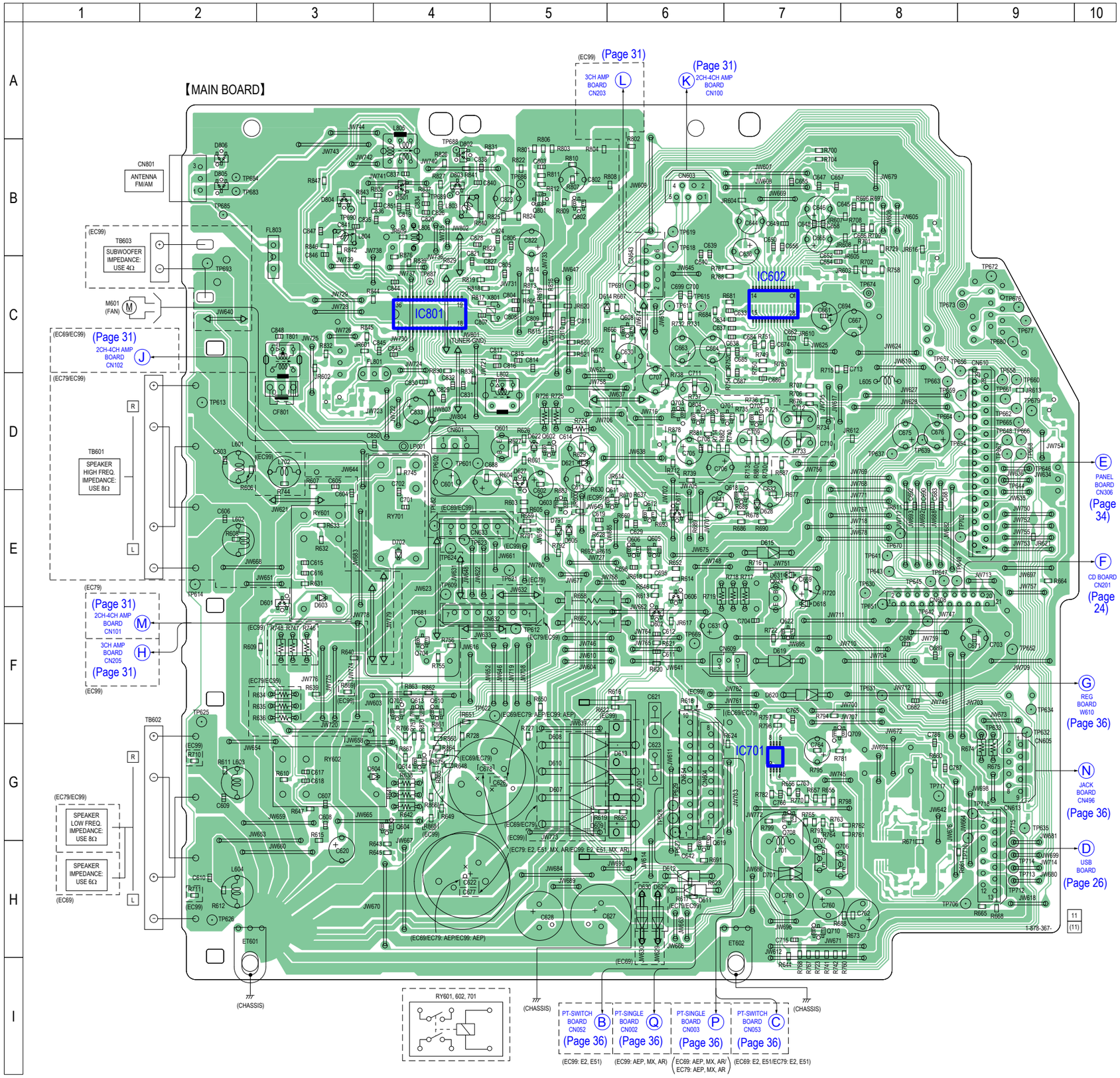

6-11. PRINTED WIRING BOARDS - AMP Section -

• See page 23 for Circuit Boards Location. • : Uses unleaded solder.

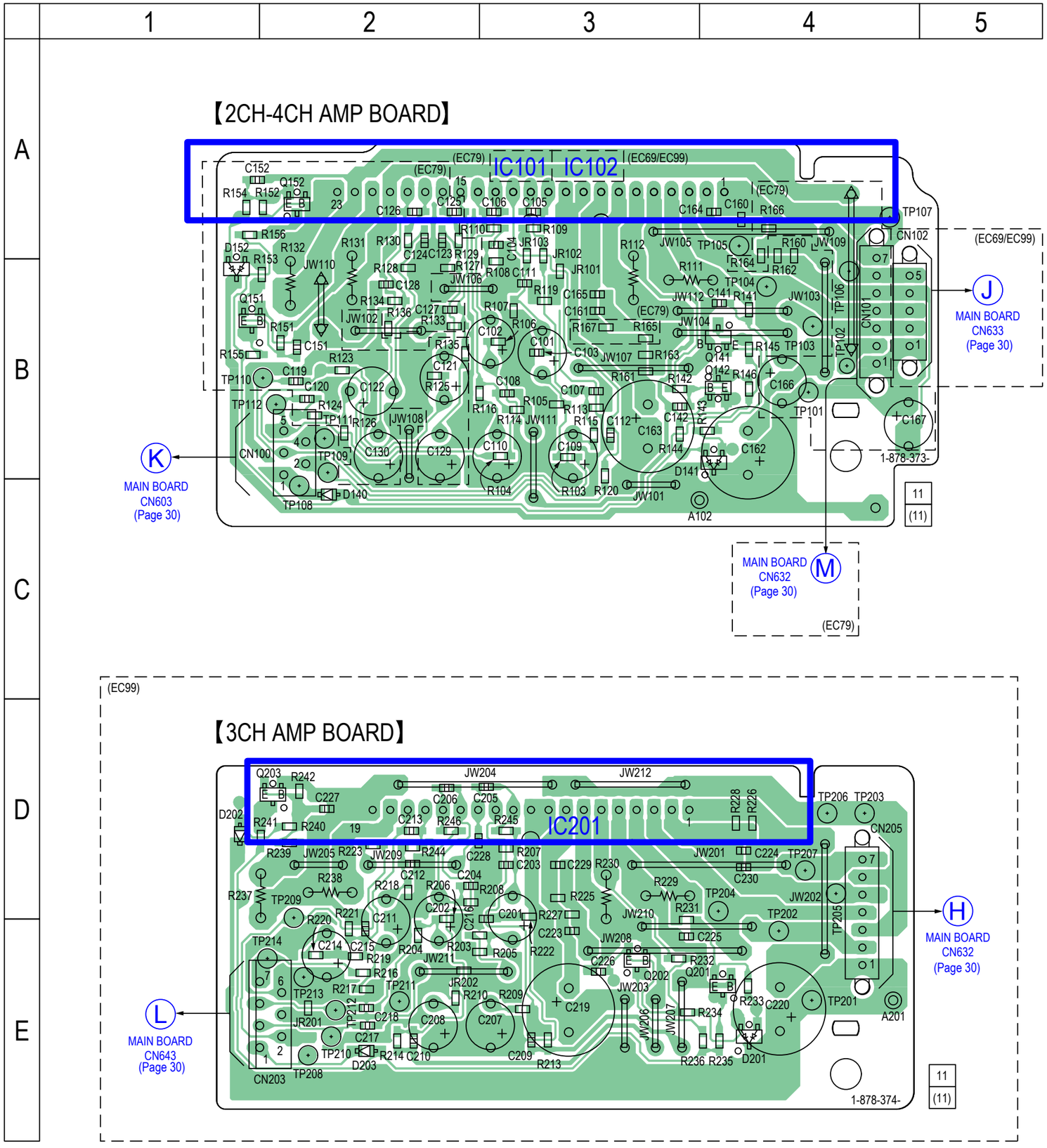

• Semiconductor Location

Ref. No.	Location
D140	C-2
D141	B-4
D152	B-1
D201	E-4
D202	D-1
D203	E-2
IC101	A-3
IC102	A-3
IC201	D-3
Q141	B-4
Q142	B-4
Q151	B-1
Q152	A-2
Q201	E-4
Q202	E-3
Q203	D-2

6-12. SCHEMATIC DIAGRAM - 2CH-4CH AMP Board -

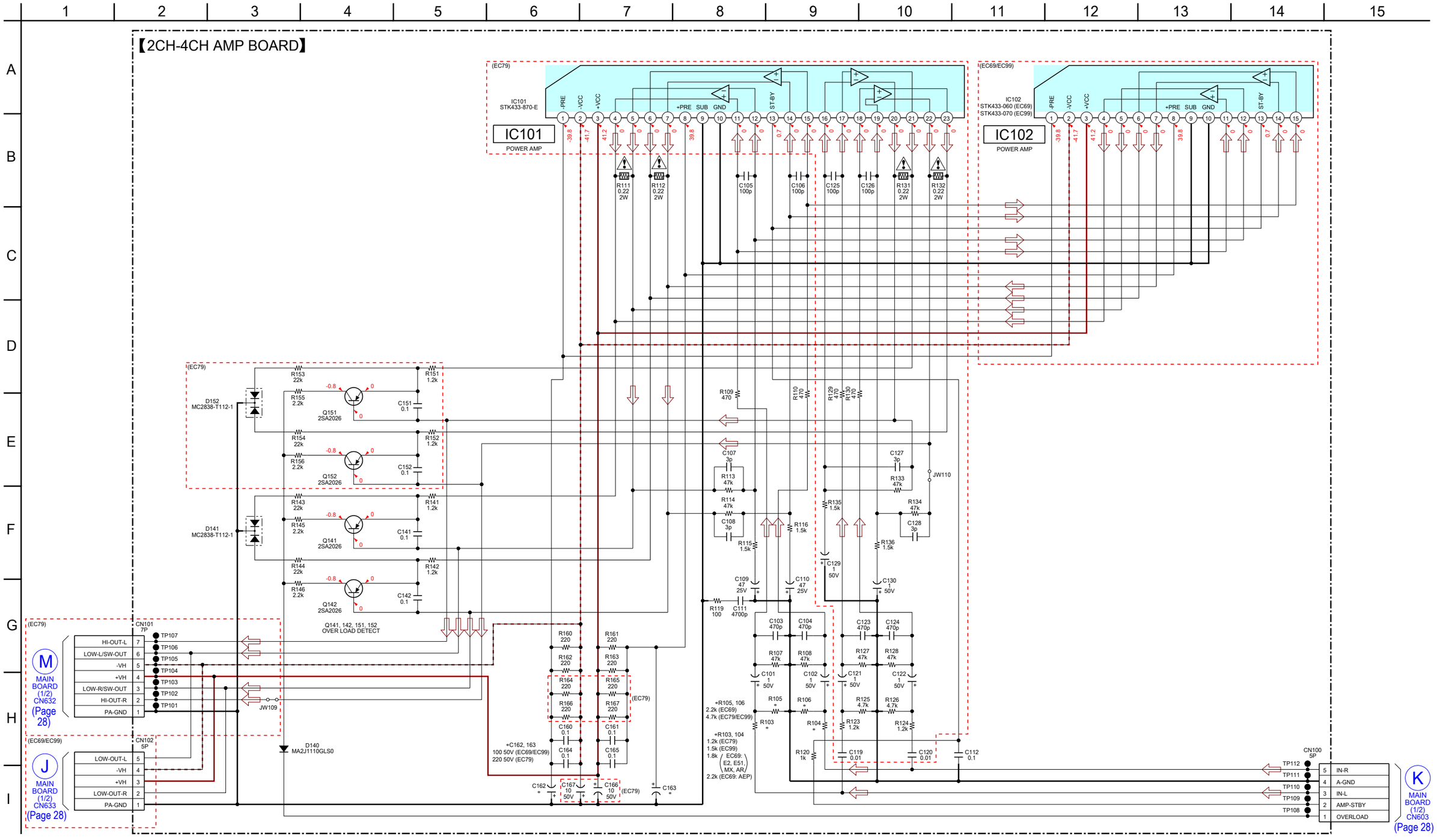

6-13. SCHEMATIC DIAGRAM - 3CH AMP Board (EC99) -

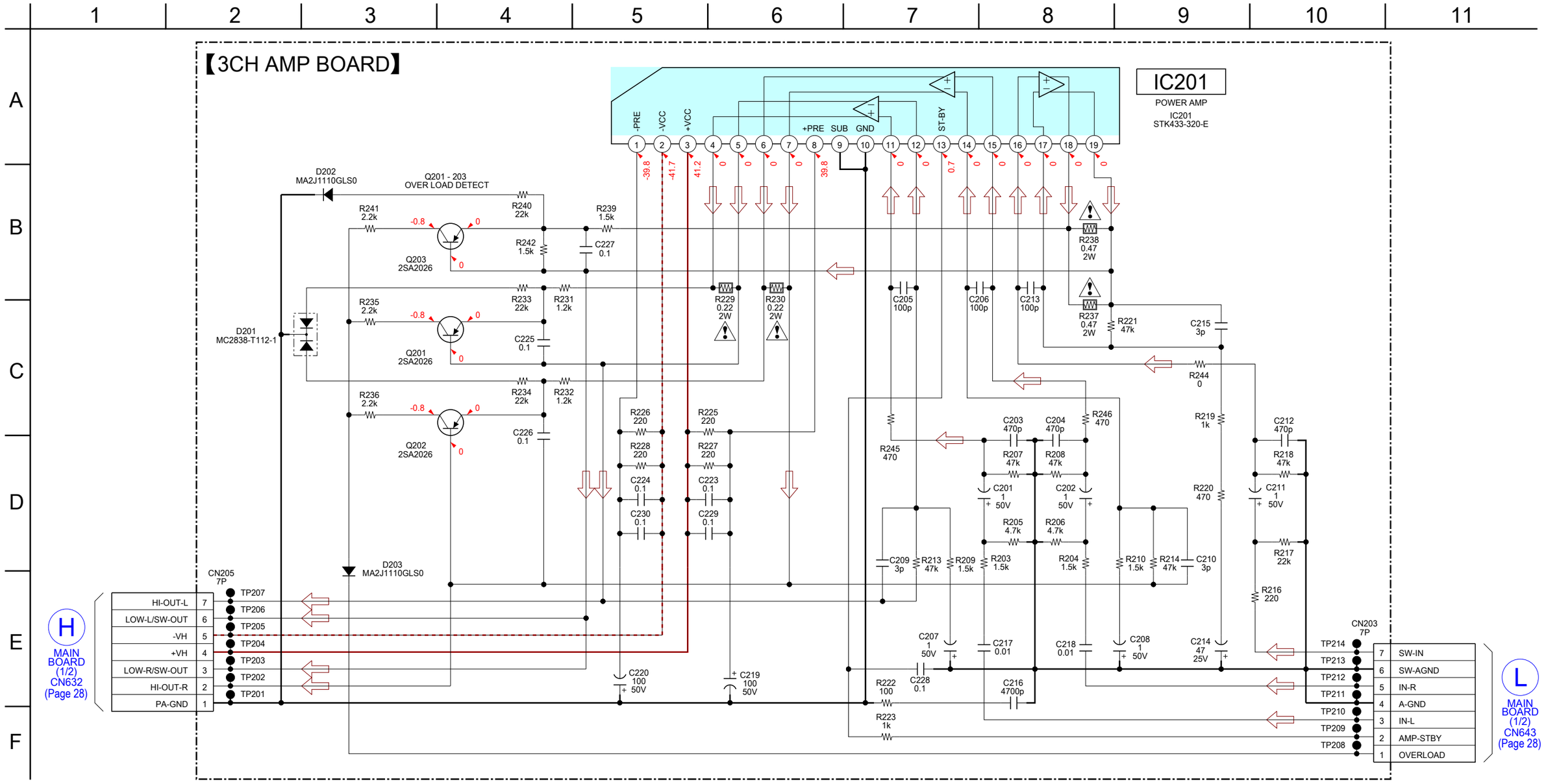

6-14. PRINTED WIRING BOARD - PANEL Board -

• See page 23 for Circuit Boards Location. • : Uses unleaded solder.

• **Semiconductor Location**

Ref. No.	Location
D301	C-2
D302	C-2
D303	D-1
D304	E-2
D305	D-4
D306	G-6
IC301	F-4
IC302	G-2
Q301	G-6
Q302	C-1
Q303	C-2
Q304	C-2
Q305	C-2
Q306	C-2
Q307	D-4
Q308	D-5
Q309	D-4
Q310	D-4
Q311	D-4
Q312	D-4
Q313	D-5
Q314	D-5
Q315	E-5
Q316	E-4
Q317	E-5
Q318	E-5

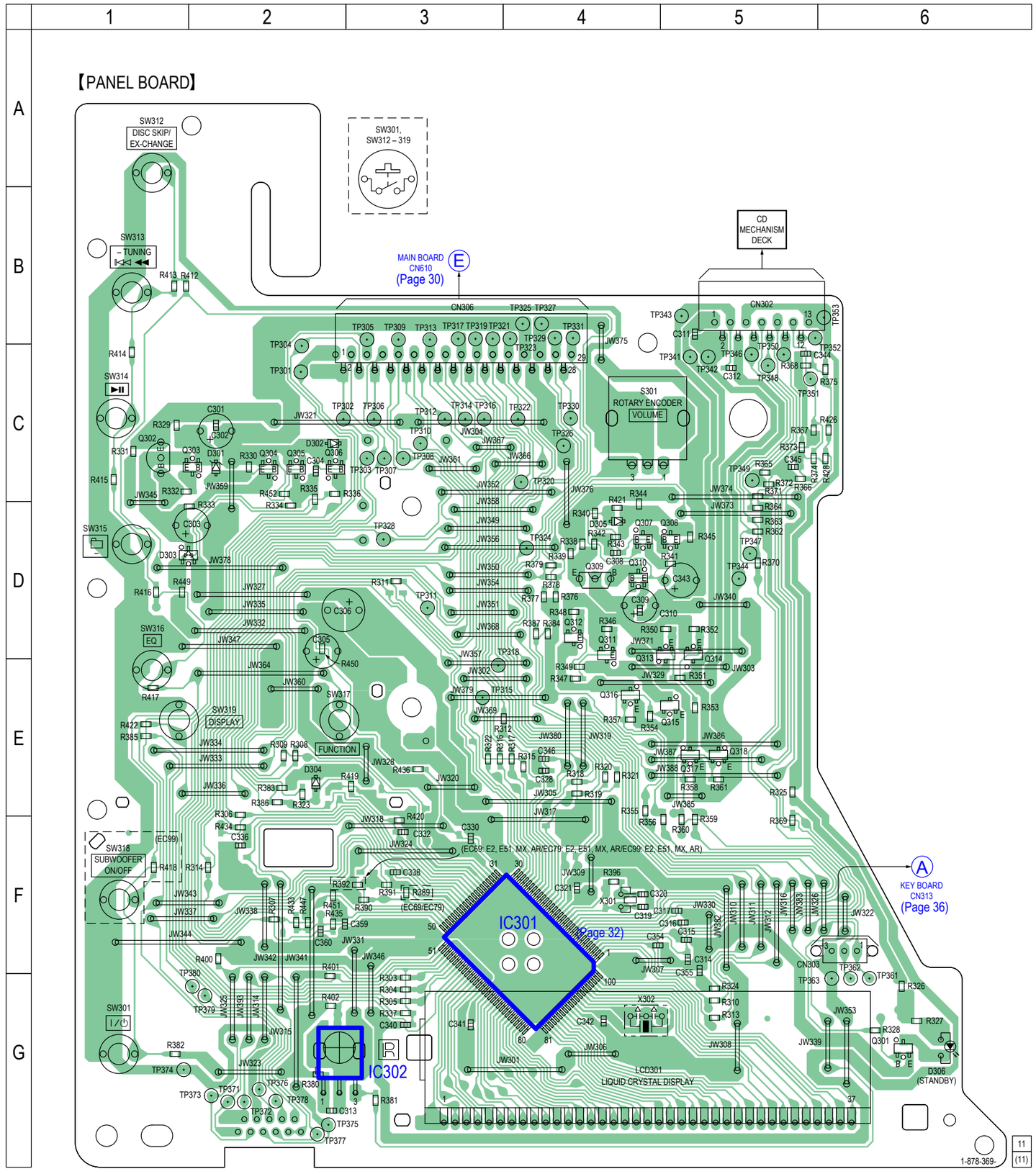

6-15. SCHEMATIC DIAGRAM - PANEL Board - • See page 26 for Waveforms. • See page 39 for IC Pin Function Description.

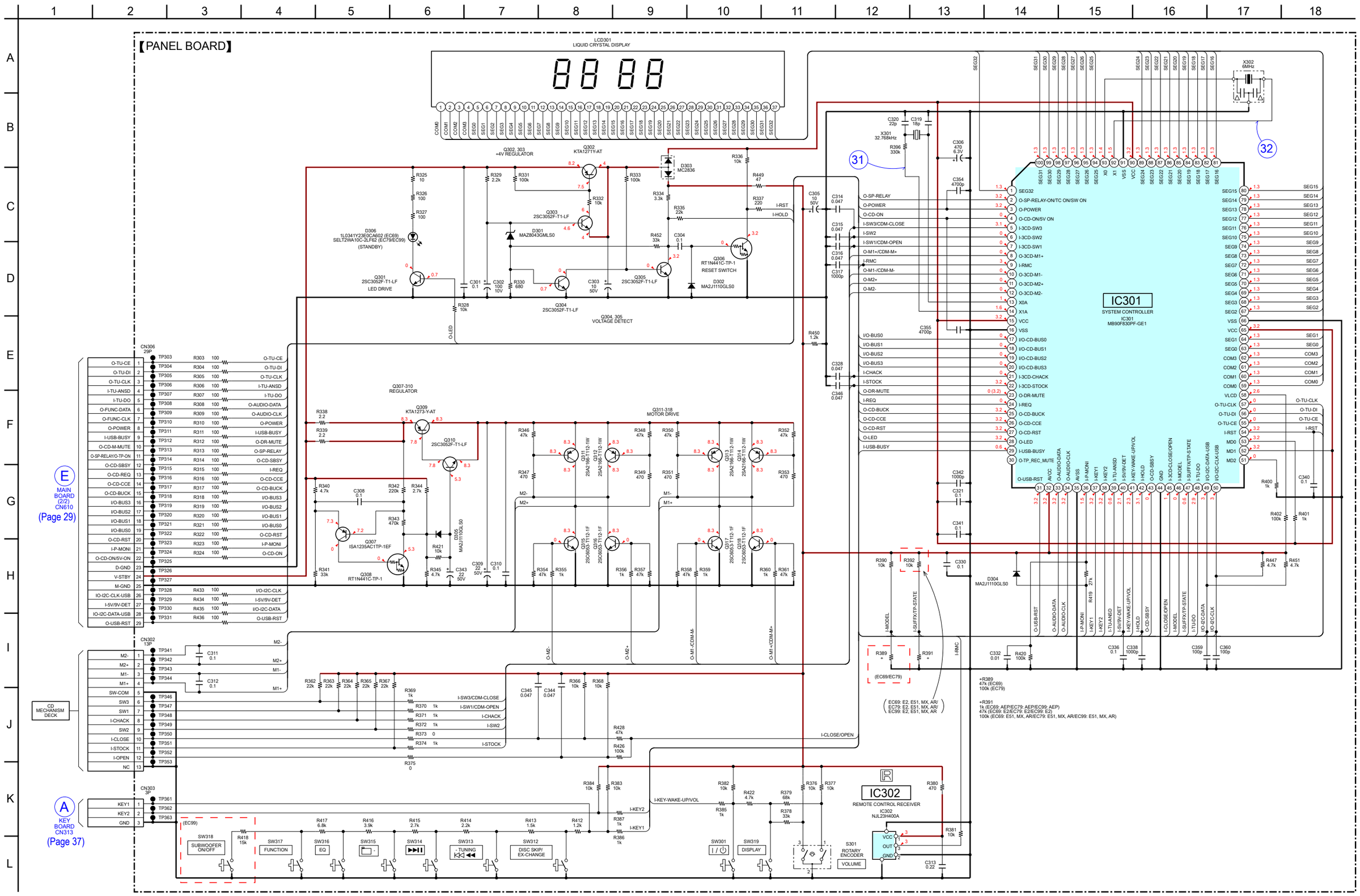

6-16. PRINTED WIRING BOARDS - AUDIO IN/OUT, KEY, POWER SUPPLY Section -

• See page 23 for Circuit Boards Location. • : Uses unleaded solder.

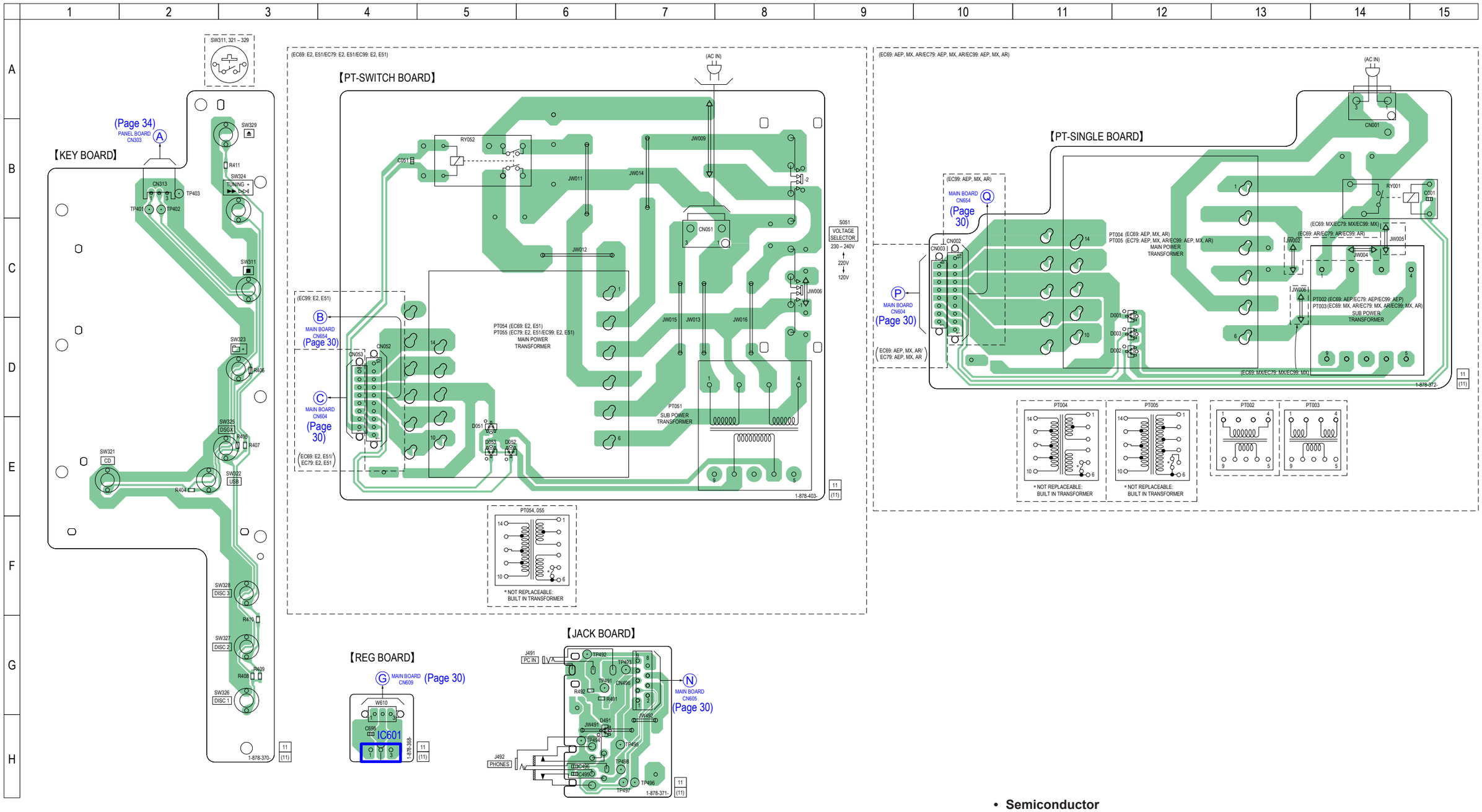

- **Semiconductor Location**

Ref. No.	Location
D001	C-12
D002	D-12
D003	D-12
D051	E-5
D052	E-5
D053	E-5
D491	H-6
IC601	H-4

6-17. SCHEMATIC DIAGRAM - AUDIO IN/OUT, KEY, POWER SUPPLY Section -

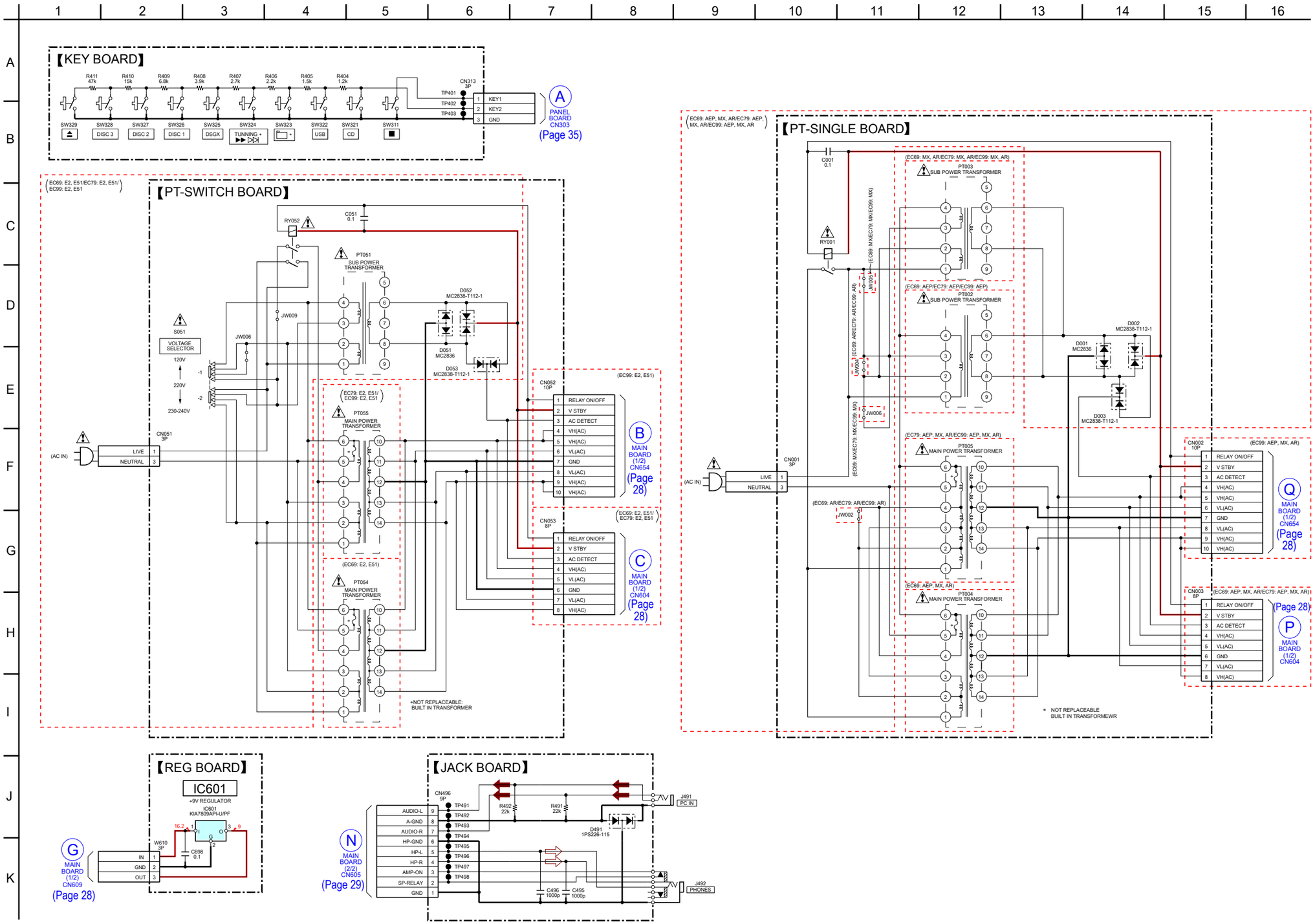

- **IC Block Diagrams**

– CD Board –

IC201 TK63115SCL-G@GT

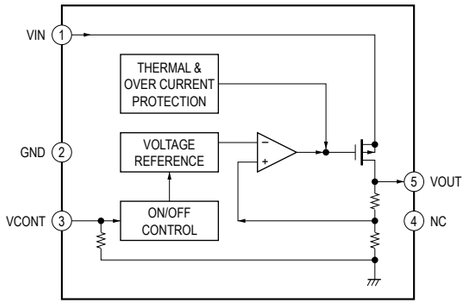

IC401 BA5826SFP-E2

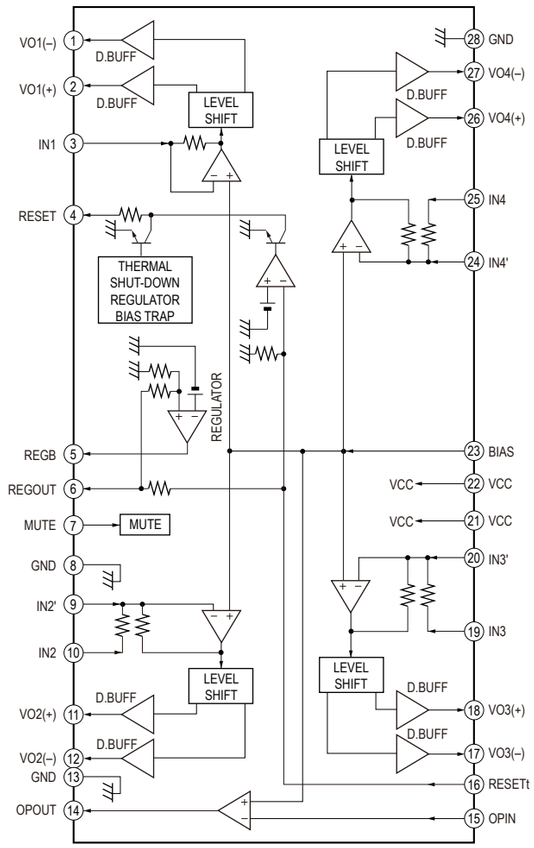

IC801 LV23003VA

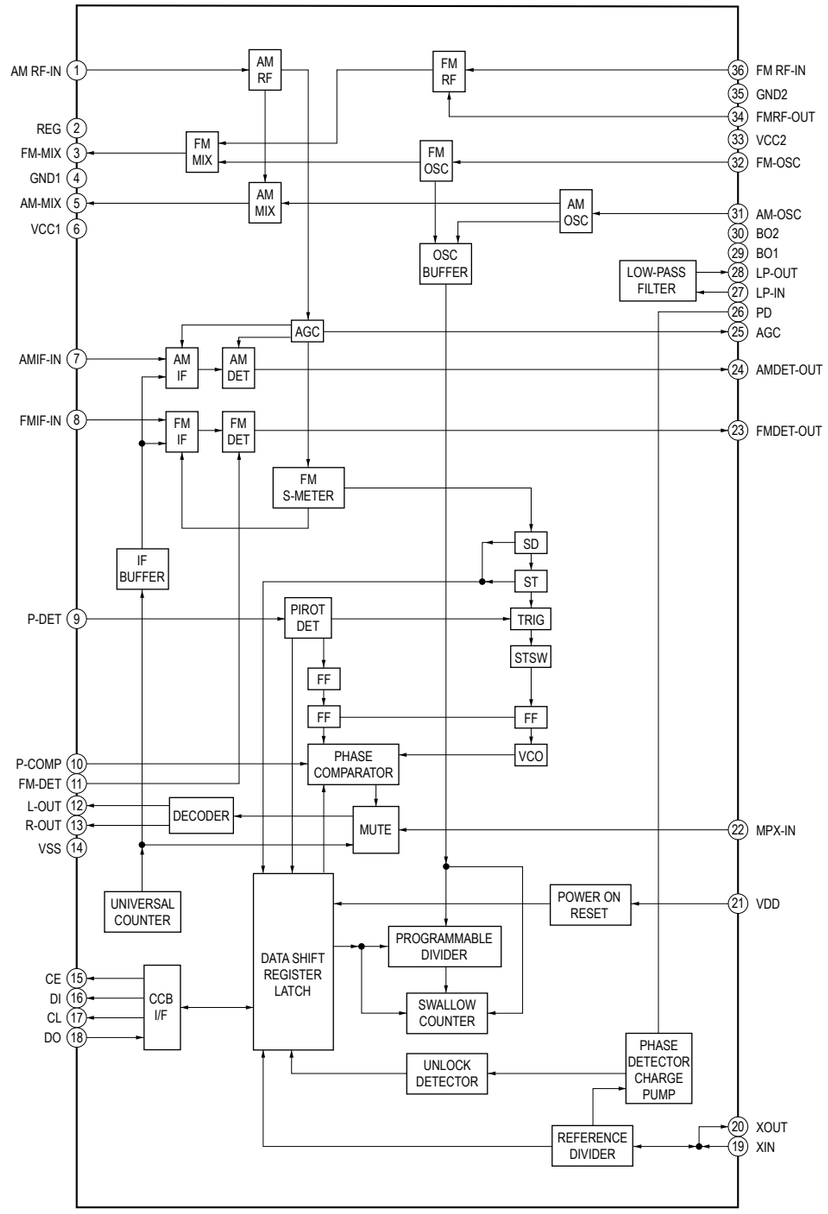

– MAIN Board –

IC602 BD3499FV-E2

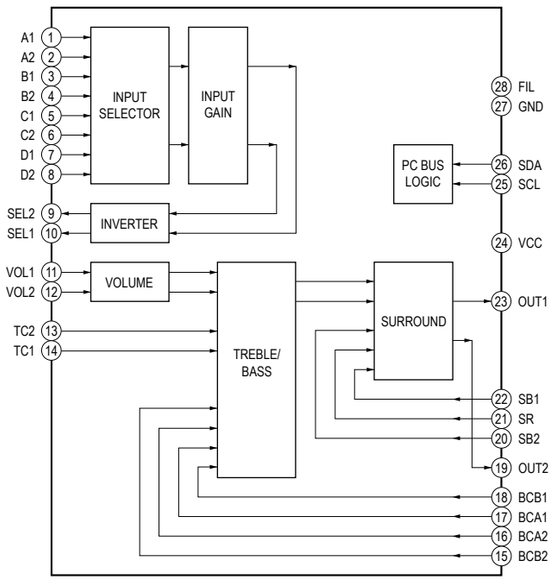

IC701 NJM2368V (TE2)

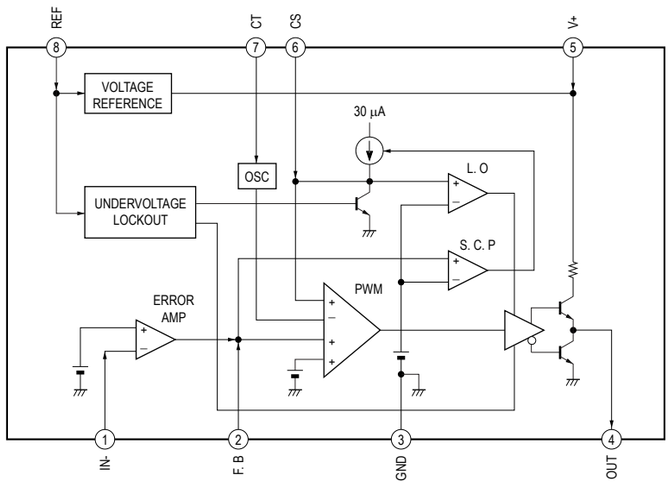

- **IC Pin Function Description**

CD BOARD IC101 TC94A70FG-006 (CD-MP3 PROCESSOR)

Pin No.	Pin Name	I/O	Description
1	AVSS3	-	Ground terminal
2	RFZi	I	RF ripple zero crossing signal input terminal
3	RFRP	O	RF ripple signal output terminal
4	SBAD/RFDC	O	Sub beam addition signal or RF peak detection signal output terminal Not used
5	FEi	O	Focus error signal output terminal Not used
6	TEi	O	Tracking error signal output terminal
7	TEZi	I	Tracking error zero crossing signal input terminal
8	AVDD3	-	Power supply terminal (+3.3V)
9	FOo	O	Focus coil drive signal output terminal
10	TRo	O	Tracking coil drive signal output terminal
11	VREF	I	Reference voltage (+1.65V) input terminal
12	FMo	O	Sled motor drive signal output terminal
13	DMo	O	Spindle motor drive signal output terminal
14	VSSP3	-	Ground terminal
15	VCOi	I	VCO control voltage input terminal
16	VDDP3	-	Power supply terminal (+3.3V)
17	VDD1	-	Power supply terminal (+1.5V)
18	VSS1	-	Ground terminal
19	FGiN	I	FG signal input terminal Not used
20	IO0 (/HSO)	I	Disc inner position detection signal input terminal
21	IO1 (/UHSO)	O	Not used
22	XVSS3	-	Ground terminal
23	XI	I	System clock input terminal (16.9344 MHz)
24	XO	O	System clock output terminal (16.9344 MHz)
25	XVDD3	-	Power supply terminal (+3.3V)
26	DVSS3	-	Ground terminal
27	RO	O	Audio data (R-ch) output to the electrical volume
28	DVDD3	-	Power supply terminal (+3.3V)
29	DVR	O	Reference voltage (+1.65V) output terminal
30	LO	O	Audio data (L-ch) output to the electrical volume
31	DVSS3	-	Ground terminal
32	VDDT3	-	Power supply terminal (+3.3V)
33	VSS1	-	Ground terminal
34	VDD1	-	Power supply terminal (+1.5V)
35	VDDM1	-	Power supply terminal (+1.5V)
36	SRAMSTB	I	S-RAM standby mode control signal input terminal Fixed at “L” in this set
37	XRST	I	Reset signal input from the system controller “L”: reset
38, 39	BUS0, BUS1	I	Serial data input from the system controller
40	BUS2 (SO)	I	Serial data input from the system controller
41	BUS3 (SI)	I	Serial data input from the system controller
42	BUCK (CLK)	I	Serial data transfer clock signal input from the system controller
43	XCCE	I	Chip enable signal input from the system controller
44	TEST	I	Setting terminal for test mode Normally fixed at “L”
45	IRQ	I	Interrupt request signal input terminal Not used
46	AoUT3 (PO4)	O	Request signal output terminal Not used
47	AoUT2 (PO5)	O	Audio data output terminal Not used
48	PIO0	O	Request signal output to the system controller
49, 50	PIO1, PIO2	O	Not used
51	PIO3	I	Gate signal input terminal Not used
52	VSS1	-	Ground terminal
53	VDDT3	-	Power supply terminal (+3.3V)
54	SBSY	O	Subcode block sync signal output to the system controller
55	SBOK/FOK	O	Not used

Pin No.	Pin Name	I/O	Description
56	IPF	O	Not used
57	SFSY/LOCK	O	Not used
58	ZDET	O	Zero detection signal output terminal Not used
59	GPIN	I	Not used
60	MS	I	Microcomputer interface mode selection signal input terminal Fixed at “H” in this set
61	DOUT (PO6)	O	Digital audio data output terminal Not used
62	AOUT1 (PO7)	O	Audio data output terminal Not used
63	BCK (PO8)	O	Bit clock signal output terminal Not used
64	LRCK (PO9)	O	L/R sampling clock signal output terminal Not used
65	AIN (PI4)	I	Digital audio data input terminal Not used
66	BCKi (PI5)	I	Bit clock signal input terminal Not used
67	LRCKi (PI6)	I	L/R sampling clock signal input terminal Not used
68	VDD1	-	Power supply terminal (+1.5V)
69	VSS1	-	Ground terminal
70	AWRC	-	Not used
71	PVDD3	-	Power supply terminal (+3.3V)
72	PDo	O	Phase error margin signal between EFM signal and PLCK signal output terminal
73	TMAXS	O	TMAX detection signal output terminal Not used
74	TMAX	O	TMAX detection signal output terminal
75	LPFN	I	Inverted signal input from the operation amplifier for PLL loop filter
76	LPFo	O	Signal output from the operation amplifier for PLL loop filter
77	PVREF	I	Reference voltage (+1.65V) input terminal
78	VCOF	O	VCO filter output terminal
79	PVSS3	-	Ground terminal
80	SLCo	O	EFM slice level output terminal
81	RFi	I	RF signal input terminal
82	RFRPi	I	RF ripple signal input terminal
83	RFEQo	O	EFM slice level output terminal
84	VRo	O	Reference voltage (+1.65V) output terminal
85	RESiN	O	External resistor connection terminal
86	VMDiR	O	Reference voltage (+1.65V) output terminal for automatic power control circuit
87	TESTR	O	Low-pass filter terminal for RFEQO offset correction
88	AGCi	I	RF signal amplitude adjustment amplification input terminal
89	RFo	O	RF signal generation amplification output terminal
90	RVDD3	-	Power supply terminal (+3.3V)
91	LDo	O	Laser diode on/off control signal output to the automatic power control circuit “H”: laser diode on
92	MDi	I	Light amount monitor input from the laser diode of optical pick-up block
93	RVSS3	-	Ground terminal
94	FNi2 (C)	I	Main beam (C) input from the optical pick-up block
95	FNi1 (A)	I	Main beam (A) input from the optical pick-up block
96	FPi2 (D)	I	Main beam (D) input from the optical pick-up block
97	FPi1 (B)	I	Main beam (B) input from the optical pick-up block
98	TPi (F)	I	Sub beam (F) input from the optical pick-up block
99	TNPC	O	External capacitor connection terminal
100	TNi (E)	I	Sub beam (E) input from the optical pick-up block

USB BOARD IC101 BU81438JKV-E2 (USB CONTROLLER)

Pin No.	Pin Name	I/O	Description
1	RESETX	I	Reset signal input from the system controller "L": reset
2	SEL_SLAVE	I	Setting terminal for slave mode "L": slave mode, "H": stand-alone mode Fixed at "L" in this set
3	SEL_MP3	I	Setting terminal for MPEG audio layer "L": MP1/MP2/MP3 playback, "H": only MP3 playback Fixed at "L" in this set
4	SEL_DOUT	I	Setting terminal for digital audio output "L": output on Fixed at "H" in this set
5	SEL_VOL	I	Setting terminal for volume control "H": volume key command effective Fixed at "L" in this set
6	SEL_APLAY	I	Setting terminal for operation mode when device is recognized "L": playback, "H": stop Fixed at "H" in this set
7	SEL_UTPKT	I	Setting terminal for USB test packet output "L": test packet output, "H": operation usually Fixed at "H" in this set
8, 9	TEST1, TEST2	I	Setting terminal for test mode Normally fixed at "H"
10	MCHNG	O	Not used
11	BUSY	O	Busy signal output to the system controller
12	SCL	I	Serial data transfer clock signal input from the system controller
13	SDA	I/O	Serial data input/output with the system controller
14, 15	A0, A1	I	Setting terminal for slave address
16	SEL_SMAN	I	Setting terminal for manual mode "L": manual mode, "H": auto mode Fixed at "H" in this set
17	TEST3	I	Setting terminal for test mode Normally fixed at "H"
18	DVDDIO	-	Power supply terminal (+3.3V)
19	SD_CON	I	Not used
20	SD_DO	I	Not used
21	SD_CLK	O	Not used
22	SD_DI	O	Not used
23	SD_CS	O	Not used
24	DVSS	-	Ground terminal
25	TEST4	I	Setting terminal for test mode Normally fixed at "H"
26	CLKOUT12	O	Not used
27	DVDD_M2	I	Power supply monitor terminal
28 to 30	TEST6 to TEST8	I	Setting terminal for test mode Normally fixed at "H"
31	ATEST1	O	Setting terminal for test mode
32	AVDDC	-	Power supply terminal (+3.3V)
33, 34	USB_DM, USB_DP	I/O	Audio serial data input/output with the USB connector
35	AVSS	-	Ground terminal
36	REXTI	O	Reference voltage output terminal
37	VOREFI	O	Setting terminal for test mode
38	VDD_PLL	-	Power supply terminal (+3.3V)
39	TEST_PLL	I	Setting terminal for test mode
40	XIN_PLL	I	System clock input terminal (16.9344 MHz)
41	XOUT_PLL	O	System clock output terminal (16.9344 MHz)
42	VSS_PLL	-	Ground terminal
43	DAVSS	-	Ground terminal
44	RDACO	O	Audio serial data output terminal (R-ch)
45	VCDACO	O	Reference voltage output terminal
46	LDACO	O	Audio serial data output terminal (L-ch)
47	DAVDD	-	Power supply terminal (+3.3V)
48	AMUTE	O	Audio muting on/off control signal output terminal "L": muting on Not used
49 to 52	TEST9 to TEST12	O	Setting terminal for test mode Normally fixed at "H"
53	LRCK	O	L/R sampling clock signal output terminal Not used
54	BCK	O	Bit clock signal output terminal Not used
55	DATA	O	Digital audio data output terminal Not used
56	TEST13	I	Setting terminal for test mode Normally fixed at "H"
57	DVDD_M1	I	Power supply monitor terminal
58	TEST14	I	Setting terminal for test mode Normally fixed at "L"
59 to 61	TEST15 to TEST17	I	Setting terminal for test mode Normally fixed at "H"

Pin No.	Pin Name	I/O	Description
62	DVSS	-	Ground terminal
63	TMODE	I	Setting terminal for test mode Normally fixed at “L”
64	DVDDIO	-	Power supply terminal (+3.3V)

PANEL BOARD IC301 MB90F830PF-GE1 (SYSTEM CONTROLLER)

Pin No.	Pin Name	I/O	Descriptio
1	SEG32	O	Segment drive signal output to the liquid crystal display
2	O-SP-RELAY-ON/ TC ON/SW ON	O	Relay drive signal output terminal (for speaker), and subwoofer function on/off control signal output terminal (EC99)
3	O-POWER	O	Main power on/off control signal output terminal “H”: main power on
4	O-CD-ON/5V ON	O	CD and VBUS power on/off control signal output terminal “H”: CD and VBUS power on
5 to 7	I-3CD-SW3 to I-3CD-SW1	I	Detection switch input from the CD mechanism deck
8	O-3CD-M1+	O	Motor drive signal output to the CD mechanism deck
9	I-RMC	I	Remote control signal input from the remote control receiver
10 to 12	O-3CD-M1-, O-3CD-M2+, O-3CD-M2-	O	Motor drive signal output to the CD mechanism deck
13	X0A	I	Sub system clock input terminal (32.768 kHz)
14	X1A	O	Sub system clock output terminal (32.768 kHz)
15	VCC	-	Power supply terminal (+3.3V)
16	VSS	-	Ground terminal
17 to 20	I/O-CD-BUS0 to I/O-CD-BUS3	O	Serial data output to the CD-MP3 processor
21, 22	I-3CD-CHACK, I-3CD-STOCK	I	Detection switch input from the CD mechanism deck
23	O-DR-MUTE	O	Motor drive on/off control signal output to the motor/coil driver
24	I-REQ	I	Request signal input from the CD-MP3 processor
25	O-CD-BUCK	O	Serial data transfer clock signal output to the CD-MP3 processor
26	O-CD-CCE	O	Chip enable signal output to the CD-MP3 processor
27	O-CD-RST	O	System reset signal output to the CD-MP3 processor “L”: reset
28	O-LED	O	LED drive signal output terminal for standby indicator
29	I-USB-BUSY	I	Busy signal input from the USB controller
30	O-TP_REC_MUTE	O	Not used
31	O-USB-RST	O	System reset signal output to the USB controller “L”: reset
32	AVCC	-	Power supply terminal (+3.3V)
33	O-AUDIO-DATA	O	Serial data output to the electrical volume
34	O-AUDIO-CLK	O	Serial data transfer clock signal output to the electrical volume
35	AVSS	-	Ground terminal
36	I-P-MONI	I	Power monitor signal input terminal
37, 38	I-KEY1, I-KEY2	I	Front panel key input terminal (A/D input)
39	I-TU-ANSD	I	Auto gain control signal input terminal
40	I-5V/9V-DET	I	Power supply voltage detection signal input terminal
41	I-KEY-WAKE-UP/VOL	I	Front panel key input terminal (A/D input)
42	I-HOLD	I	Hold signal input terminal
43	O-CD-SBSY	I	Subcode block sync signal input from the CD-MP3 processor
44	GND	-	Ground terminal
45	I-3CD-CLOSE/OPEN	I	Detection switch input from the CD mechanism deck
46	I-MODEL	I	Model setting terminal
47	I-SUFFIX/TP-STATE	I	Suffix setting terminal
48	I-TU-DO	I	Serial data input from the AM/FM DET
49	I/O-I2C-DATA-USB	I/O	Serial data input/output with the USB controller
50	I/O-I2C-CLK-USB	O	Serial data transfer clock signal output to the USB controller
51 to 53	MD2 to MD0	-	Not used
54	I-RST	I	Reset signal input from the reset switch “L”: reset
55	O-TU-CE	O	Chip enable signal output to the AM/FM DET
56	O-TU-DI	O	Serial data output to the AM/FM DET
57	O-TU-CLK	O	Serial data transfer clock signal output to the AM/FM DET
58	VLCD	-	Terminal for doubler circuit capacitor connection to develop liquid crystal display drive voltage
59 to 62	COM0 to COM3	O	Common drive signal output to the liquid crystal display
63, 64	SEG0, SEG1	O	Segment drive signal output to the liquid crystal display
65	VCC	-	Power supply terminal (+3.3V)
66	VSS	-	Ground terminal

Pin No.	Pin Name	I/O	Descriptio
67 to 89	SEG2 to SEG24	O	Segment drive signal output to the liquid crystal display
90	VCC	-	Power supply terminal (+3.3V)
91	VSS	-	Ground terminal
92	X1	I	Main system clock output terminal (6 MHz)
93	X0	O	Main system clock input terminal (6 MHz)
94 to 100	SEG25 to SEG31	O	Segment drive signal output to the liquid crystal display

SECTION 7
EXPLODED VIEWS

Note:
- -XX and -X mean standardized parts, so they may have some difference from the original one.
- Items marked "*" are not stocked since they are seldom required for routine service. Some delay should be anticipated when ordering these items.
- The mechanical parts with no reference number in the exploded views are not supplied.
- Color Indication of Appearance Parts Example:
  KNOB, BALANCE (WHITE) . . . (RED)
  ↑ Parts Color ↑ Cabinet's Color
- Abbreviation
  AR : Argentina model
  E2 : 120V AC area in E model
  E51 : Chilean and Peruvian models
  MX : Mexican model

The components identified by mark ⚠ or dotted line with mark ⚠ are critical for safety.
Replace only with part number specified.

7-1. PANEL SECTION

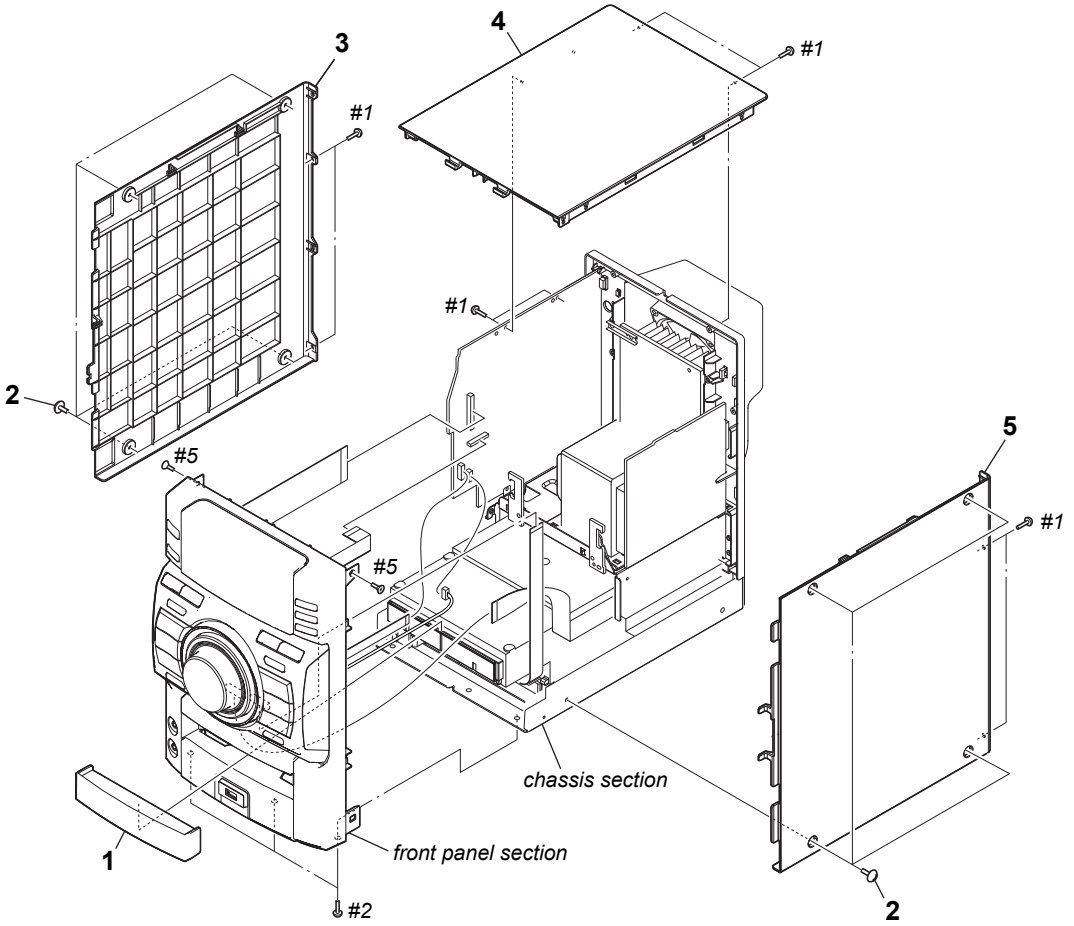

Ref. No.	Part No.	Description	Remark
1	4-120-680-01	DOOR (CD)	
2	3-363-099-32	SCREW (CASE 3 TP2)	
3	2-890-831-11	PANEL (L), SIDE	
4	2-890-829-11	PANEL (TOP)	
5	2-890-830-11	PANEL (R), SIDE (EC69)	
5	2-890-830-31	PANEL (R), SIDE (EC79/EC99)	
#1	7-685-647-79	SCREW +BVTP 3X10 TYPE2 N-S	
#2	7-685-872-01	SCREW +BVTT 3X8 (S)	
#5	7-685-247-14	SCREW +KTP 3X10 TYPE2 NON-SLIT	

7-2. FRONT PANEL SECTION

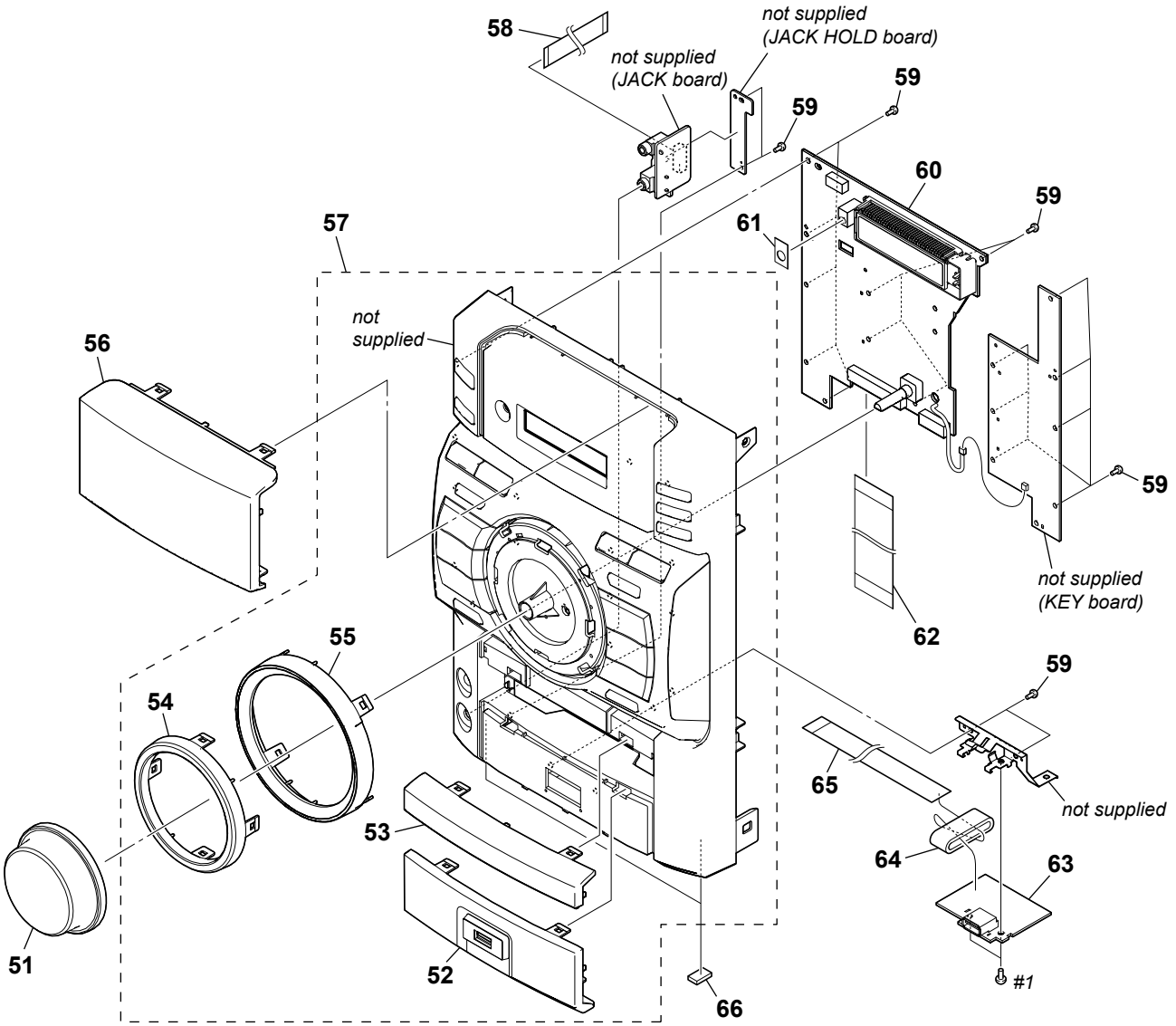

Ref. No.	Part No.	Description	Remark
51	4-120-663-01	KNOB (VOL)	
52	4-120-660-01	PLATE, ORNAMENT (LO)	
53	4-120-659-01	PLATE, ORNAMENT (UP)	
54	4-120-658-01	RING (VOL) (EC79/EC99)	
54	4-120-658-21	RING (VOL) (EC69)	
55	4-120-657-01	RING, ORNAMENT	
56	4-124-519-01	WINDOW (EC99)	
56	4-124-519-21	WINDOW (EC79)	
56	4-124-519-41	WINDOW (EC69)	
57	A-1616-652-A	PANEL ASSY, FRONT (EC99: EXCEPT MX)	
57	A-1616-654-A	PANEL ASSY, FRONT (EC79: EXCEPT MX)	
57	A-1616-656-A	PANEL ASSY, FRONT (EC69: E2, E51, AR)	
57	A-1705-456-A	PANEL ASSY, FRONT (EC69: AEP)	
57	A-1730-498-A	PANEL ASSY, FRONT (EC99: MX)	
57	A-1730-499-A	PANEL ASSY, FRONT (EC79: MX)	
57	A-1730-500-A	PANEL ASSY, FRONT (EC69: MX)	
58	1-833-054-21	CABLE, FLEXIBLE FLAT (9 CORE)	
59	3-087-053-01	+BVTP2.6 (3CR)	

Ref. No.	Part No.	Description	Remark
60	A-1599-417-A	PANEL BOARD, COMPLETE (EC99: AEP)	
60	A-1599-439-A	PANEL BOARD, COMPLETE (EC99: E51, MX, AR)	
60	A-1599-446-A	PANEL BOARD, COMPLETE (EC99: E2)	
60	A-1599-451-A	PANEL BOARD, COMPLETE (EC79: AEP)	
60	A-1599-458-A	PANEL BOARD, COMPLETE (EC79: E51, MX, AR)	
60	A-1599-462-A	PANEL BOARD, COMPLETE (EC79: E2)	
60	A-1599-467-A	PANEL BOARD, COMPLETE (EC69: AEP)	
60	A-1599-474-A	PANEL BOARD, COMPLETE (EC69: E51, MX, AR)	
60	A-1599-478-A	PANEL BOARD, COMPLETE (EC69: E2)	
61	3-297-298-01	SHEET (RM)	
62	1-832-917-21	CABLE, FLEXIBLE FLAT (29 CORE)	
63	A-1599-426-A	USB BOARD, COMPLETE	
64	1-457-413-11	CORE, FERRITE	
65	1-836-764-21	CABLE, FLEXIBLE FLAT (13 CORE)	
66	4-225-252-01	CUSHION (FOOT)	
#1	7-685-647-79	SCREW +BVTP 3X10 TYPE2 N-S	

7-3. CHASSIS SECTION

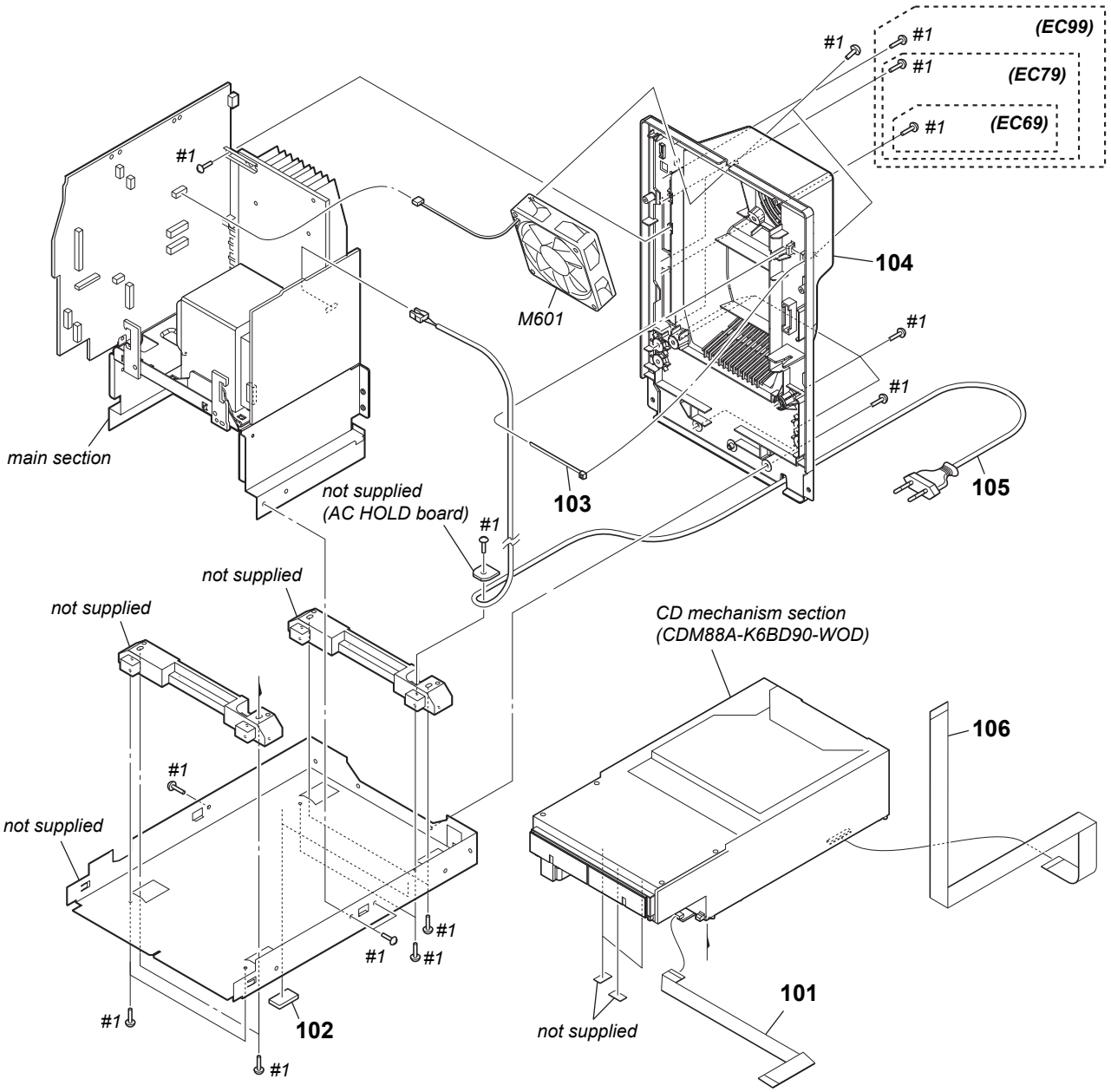

Ref. No.	Part No.	Description	Remark
101	1-832-838-21	CABLE, FLEXIBLE FLAT (13 CORE)	
102	4-225-252-01	CUSHION (FOOT)	
103	3-701-748-00	CLAMP	
104	4-124-828-01	PANEL, BACK (EC99: AEP, MX, AR)	
104	4-124-828-11	PANEL, BACK (EC99: E2, E51)	
104	4-124-828-21	PANEL, BACK (EC79: E2, E51)	
104	4-124-828-31	PANEL, BACK (EC69: E2, E51)	
104	4-124-828-41	PANEL, BACK (EC79: AEP, MX, AR)	
104	4-124-828-51	PANEL, BACK (EC69: AEP, MX, AR)	

Ref. No.	Part No.	Description	Remark
⚠ 105	1-829-387-11	CORD, POWER (AR)	
⚠ 105	1-834-965-22	CORD, POWER (MX)	
⚠ 105	1-834-966-41	POWER-SUPPLY CORD (AEP, E2, E51)	
106	1-834-181-21	CABLE, FLEXIBLE FLAT (21 CORE)	
M601	1-787-319-12	FAN, DC (EC69)	
M601	1-787-344-11	FAN, DC (EC79/EC99)	
#1	7-685-647-79	SCREW +BVTP 3X10 TYPE2 N-S	

7-4. MAIN SECTION

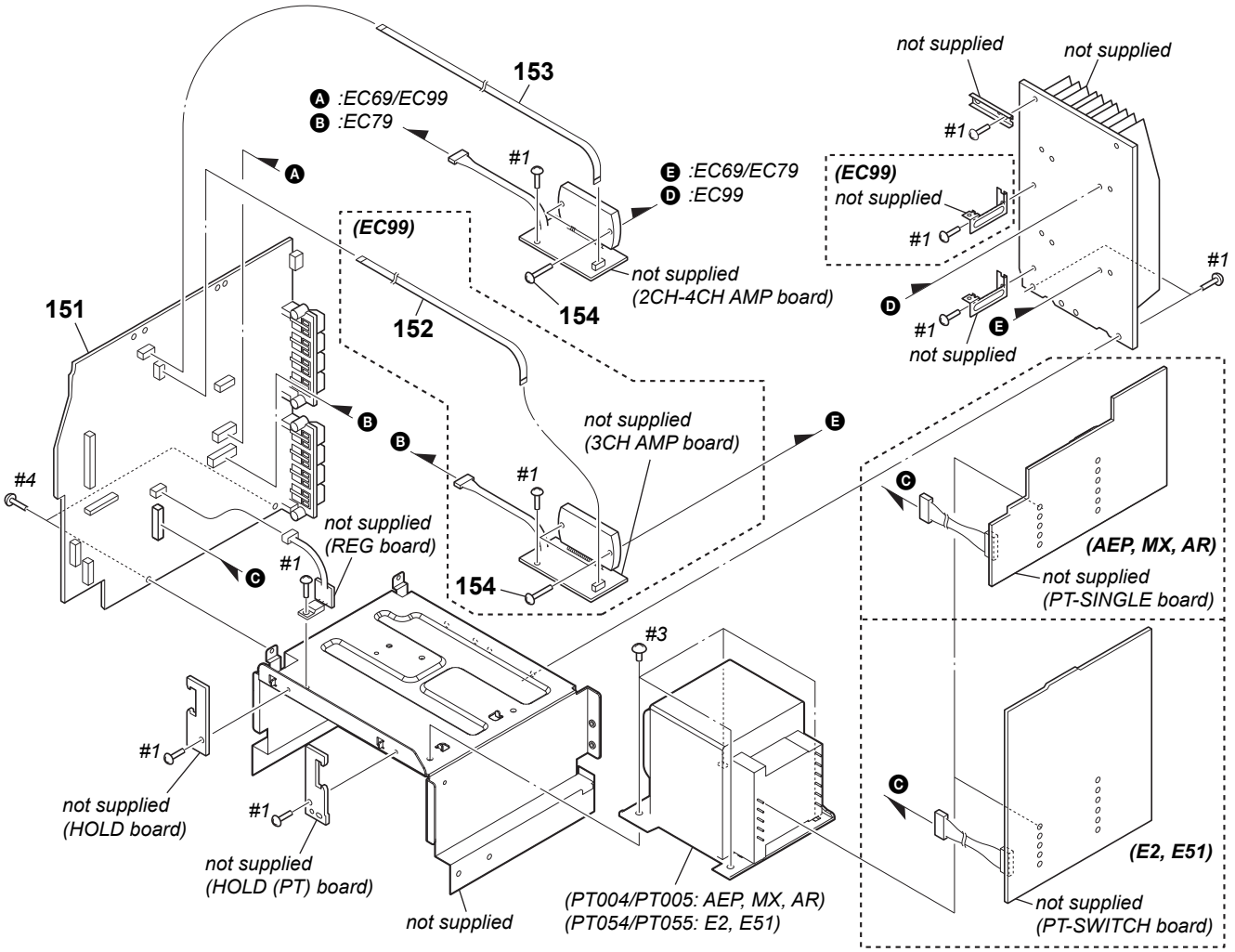

Ref. No.	Part No.	Description	Remark
151	A-1599-413-A	MAIN BOARD, COMPLETE (EC99: AEP)	
151	A-1599-449-A	MAIN BOARD, COMPLETE (EC79: AEP)	
151	A-1599-465-A	MAIN BOARD, COMPLETE (EC69: AEP)	
151	A-1702-676-A	MAIN BOARD, COMPLETE (EC69: E2, E51, AR)	
151	A-1706-659-A	MAIN BOARD, COMPLETE (EC99: E2, E51, AR)	
151	A-1706-661-A	MAIN BOARD, COMPLETE (EC79: E2, E51, AR)	
151	A-1718-681-A	MAIN BOARD, COMPLETE (EC99: MX)	
151	A-1718-683-A	MAIN BOARD, COMPLETE (EC79: MX)	
151	A-1718-685-A	MAIN BOARD, COMPLETE (EC69: MX)	
152	1-835-335-21	CABLE, FLEXIBLE FLAT (7 CORE) (EC99)	
153	1-831-744-21	CABLE, FLEXIBLE FLAT (5 CORE) (EC69/EC79)	
153	1-836-765-21	CABLE, FLEXIBLE FLAT (5 CORE) (EC99)	
154	3-905-609-31	SCREW (TRANSISTOR)	
⚠ PT004	1-445-117-11	TRANSFORMER, POWER (EC69: AEP)	
⚠ PT004	1-445-338-11	TRANSFORMER, POWER (EC69: MX)	

Ref. No.	Part No.	Description	Remark
⚠ PT004	1-445-346-11	TRANSFORMER, POWER (EC69: AR)	
⚠ PT005	1-445-567-11	TRANSFORMER, POWER (EC99: AEP)	
⚠ PT005	1-445-568-11	TRANSFORMER, POWER (EC79: AR)	
⚠ PT005	1-445-570-11	TRANSFORMER, POWER (EC99: AR)	
⚠ PT005	1-445-571-11	TRANSFORMER, POWER (EC79: MX)	
⚠ PT005	1-445-575-11	TRANSFORMER, POWER (EC99: MX)	
⚠ PT005	1-445-624-11	TRANSFORMER, POWER (EC79: AEP)	
⚠ PT054	1-445-346-11	TRANSFORMER, POWER (EC69: E2, E51)	
⚠ PT055	1-445-568-11	TRANSFORMER, POWER (EC79: E2, E51)	
⚠ PT055	1-445-570-11	TRANSFORMER, POWER (EC99: E2, E51)	
#1	7-685-647-79	SCREW +BVTP 3X10 TYPE2 N-S	
#3	7-685-880-09	SCREW +BVTT 4X6 (S)	
#4	7-685-645-79	SCREW +BVTP 3X6 TYPE2 IT-3	

7-5. CD MECHANISM SECTION (CDM88A-K6BD90-WOD)

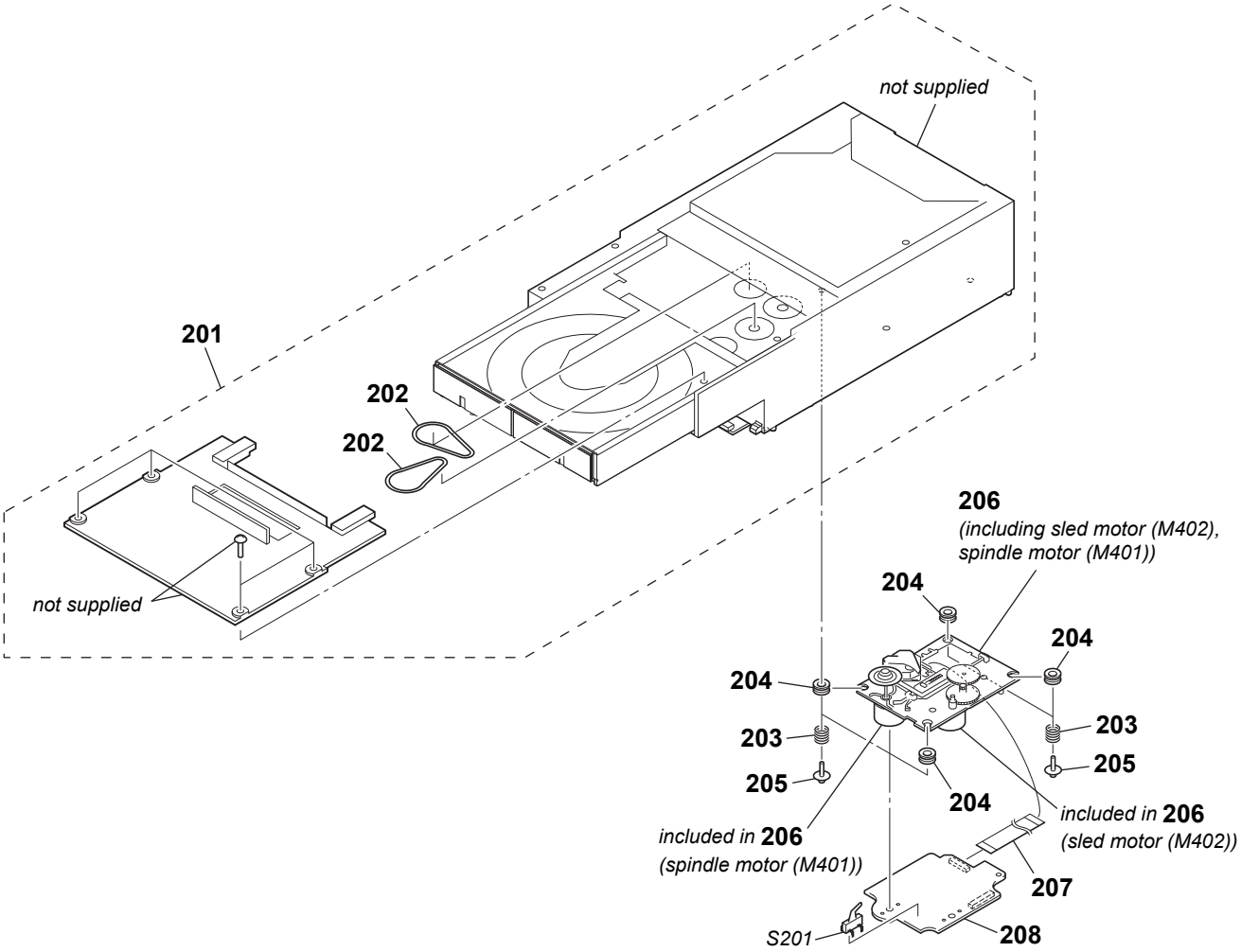

Ref. No.	Part No.	Description	Remark
201	1-797-193-62	MECHANICAL, CD (DLM3A)	
202	2-632-062-11	BELT (DLM3A)	
203	4-227-045-31	SPRING (INSULATOR), COIL	
204	4-227-549-31	INSULATOR	
205	4-985-672-01	SCREW (+PTPWHM2.6), FLOATING	
⚠ 206	A-4735-357-A	BASE ASSY, OP (KSM-213D)	
207	1-832-404-21	CABLE, FLEXIBLE FLAT (16 CORE)	
208	A-1217-914-A	CD BOARD, COMPLETE	
S201	1-771-853-11	SWITCH, DETECTION (LIMIT)	

2CH-4CH AMP

SECTION 8
ELECTRICAL PARTS LIST

Note:
- Due to standardization, replacements in the parts list may be different from the parts specified in the diagrams or the components used on the set.
- -XX and -X mean standardized parts, so they may have some difference from the original one.
- Items marked "*" are not stocked since they are seldom required for routine service. Some delay should be anticipated when ordering these items.

- RESISTORS
  All resistors are in ohms.
  METAL: Metal-film resistor.
  METAL OXIDE: Metal oxide-film resistor.
  F: nonflammable
- CAPACITORS
  uF: µF
- COILS
  uH: µH
- SEMICONDUCTORS
  In each case, u: µ, for example:
  uA. . : µA. . , uPA. . , µPA. . ,
  uPB. . : µPB. . , uPC. . , µPC. . ,
  uPD. . : µPD. .

- Abbreviation
  AR : Argentina model
  E2 : 120V AC area in E model
  E51 : Chilean and Peruvian models
  MX : Mexican model

When indicating parts by reference number, please include the board name.

The components identified by mark ⚠ or dotted line with mark ⚠ are critical for safety.
Replace only with part number specified.

Ref. No.	Part No.	Description			Remark
		2CH-4CH AMP BOARD **********			
		< CAPACITOR >			
C101	1-126-960-11	ELECT	1uF	20%	50V
C102	1-126-960-11	ELECT	1uF	20%	50V
C103	1-164-315-11	CERAMIC CHIP	470PF	5%	50V
C104	1-164-315-11	CERAMIC CHIP	470PF	5%	50V
C105	1-162-927-11	CERAMIC CHIP	100PF	5%	50V
C106	1-162-927-11	CERAMIC CHIP	100PF	5%	50V
C107	1-162-908-11	CERAMIC CHIP	3PF	0.25PF	50V
C108	1-162-908-11	CERAMIC CHIP	3PF	0.25PF	50V
C109	1-126-947-11	ELECT	47uF	20%	35V
C110	1-126-947-11	ELECT	47uF	20%	35V
C111	1-162-968-11	CERAMIC CHIP	0.0047uF	10%	50V
C112	1-100-566-91	CERAMIC CHIP	0.1uF	10%	25V
C119	1-162-970-11	CERAMIC CHIP	0.01uF	10%	25V (EC79)
C120	1-162-970-11	CERAMIC CHIP	0.01uF	10%	25V (EC79)
C121	1-126-960-11	ELECT	1uF	20%	50V (EC79)
C122	1-126-960-11	ELECT	1uF	20%	50V (EC79)
C123	1-164-315-11	CERAMIC CHIP	470PF	5%	50V (EC79)
C124	1-164-315-11	CERAMIC CHIP	470PF	5%	50V (EC79)
C125	1-162-927-11	CERAMIC CHIP	100PF	5%	50V (EC79)
C126	1-162-927-11	CERAMIC CHIP	100PF	5%	50V (EC79)
C127	1-162-908-11	CERAMIC CHIP	3PF	0.25PF	50V (EC79)
C128	1-162-908-11	CERAMIC CHIP	3PF	0.25PF	50V (EC79)
C129	1-126-960-11	ELECT	1uF	20%	50V (EC79)
C130	1-126-960-11	ELECT	1uF	20%	50V (EC79)
C141	1-100-566-91	CERAMIC CHIP	0.1uF	10%	25V
C142	1-100-566-91	CERAMIC CHIP	0.1uF	10%	25V
C151	1-100-566-91	CERAMIC CHIP	0.1uF	10%	25V (EC79)
C152	1-100-566-91	CERAMIC CHIP	0.1uF	10%	25V (EC79)
C160	1-165-621-91	CERAMIC CHIP	0.1uF		50V
C161	1-165-621-91	CERAMIC CHIP	0.1uF		50V
C162	1-126-968-11	ELECT	100uF	20%	50V (EC69/EC99)
C162	1-126-969-11	ELECT	220uF	20%	50V (EC79)
C163	1-126-968-11	ELECT	100uF	20%	50V (EC69/EC99)
C163	1-126-969-11	ELECT	220uF	20%	50V (EC79)
C164	1-165-621-91	CERAMIC CHIP	0.1uF		50V
C165	1-165-621-91	CERAMIC CHIP	0.1uF		50V
C166	1-126-964-11	ELECT	10uF	20%	50V (EC79)
C167	1-126-964-11	ELECT	10uF	20%	50V (EC79)
		< CONNECTOR >			
CN100	1-784-766-11	CONNECTOR, FFC 5P			
CN101	1-820-831-11	HOLDER, CABLE 7P (EC79)			
CN102	1-824-030-21	HOLDER, CABLE 5P (EC69/EC99)			
		< DIODE >			
D140	6-501-817-01	DIODE MA2J1110GLS0			
D141	6-500-335-01	DIODE MC2838-T112-1			
D152	6-500-335-01	DIODE MC2838-T112-1 (EC79)			
		< IC >			
IC101	6-600-731-01	IC STK433-870-E (EC79)			
IC102	6-705-620-01	IC STK433-060 (EC69)			
IC102	6-705-621-01	IC STK433-070 (EC99)			
		< JUMPER RESISTOR >			
JR101	1-216-864-11	SHORT CHIP	0		
JR102	1-216-864-11	SHORT CHIP	0		
JR103	1-216-864-11	SHORT CHIP	0		
		< TRANSISTOR >			
Q141	6-551-270-01	TRANSISTOR	2SA2026		
Q142	6-551-270-01	TRANSISTOR	2SA2026		
Q151	6-551-270-01	TRANSISTOR	2SA2026 (EC79)		
Q152	6-551-270-01	TRANSISTOR	2SA2026 (EC79)		
		< RESISTOR >			
R103	1-216-822-11	METAL CHIP	1.2K	5%	1/10W (EC79)
R103	1-216-823-11	METAL CHIP	1.5K	5%	1/10W (EC99)
R103	1-216-824-11	METAL CHIP	1.8K	5%	1/10W (EC69: E2, E51, MX, AR)

2CH-4CH AMP **3CH AMP**

Ref. No.	Part No.	Description			Remark
R103	1-216-825-11	METAL CHIP	2.2K	5%	1/10W (EC69: AEP)
R104	1-216-822-11	METAL CHIP	1.2K	5%	1/10W (EC79)
R104	1-216-823-11	METAL CHIP	1.5K	5%	1/10W (EC99)
R104	1-216-824-11	METAL CHIP	1.8K	5%	1/10W (EC69: E2, E51, MX, AR)
R104	1-216-825-11	METAL CHIP	2.2K	5%	1/10W (EC69: AEP)
R105	1-216-825-11	METAL CHIP	2.2K	5%	1/10W (EC69)
R105	1-216-829-11	METAL CHIP	4.7K	5%	1/10W (EC79/EC99)
R106	1-216-825-11	METAL CHIP	2.2K	5%	1/10W (EC69)
R106	1-216-829-11	METAL CHIP	4.7K	5%	1/10W (EC79/EC99)
R107	1-216-841-11	METAL CHIP	47K	5%	1/10W
R108	1-216-841-11	METAL CHIP	47K	5%	1/10W
R109	1-216-817-11	METAL CHIP	470	5%	1/10W
R110	1-216-817-11	METAL CHIP	470	5%	1/10W
⚠ R111	1-216-361-31	METAL OXIDE	0.22	5%	2W F
⚠ R112	1-216-361-31	METAL OXIDE	0.22	5%	2W F
R113	1-216-841-11	METAL CHIP	47K	5%	1/10W
R114	1-216-841-11	METAL CHIP	47K	5%	1/10W
R115	1-216-823-11	METAL CHIP	1.5K	5%	1/10W
R116	1-216-823-11	METAL CHIP	1.5K	5%	1/10W
R119	1-216-809-11	METAL CHIP	100	5%	1/10W
R120	1-216-821-11	METAL CHIP	1K	5%	1/10W
R123	1-216-822-11	METAL CHIP	1.2K	5%	1/10W (EC79)
R124	1-216-822-11	METAL CHIP	1.2K	5%	1/10W (EC79)
R125	1-216-829-11	METAL CHIP	4.7K	5%	1/10W (EC79)
R126	1-216-829-11	METAL CHIP	4.7K	5%	1/10W (EC79)
R127	1-216-841-11	METAL CHIP	47K	5%	1/10W (EC79)
R128	1-216-841-11	METAL CHIP	47K	5%	1/10W (EC79)
R129	1-216-817-11	METAL CHIP	470	5%	1/10W (EC79)
R130	1-216-817-11	METAL CHIP	470	5%	1/10W (EC79)
⚠ R131	1-216-361-31	METAL OXIDE	0.22	5%	2W F (EC79)
⚠ R132	1-216-361-31	METAL OXIDE	0.22	5%	2W F (EC79)
R133	1-216-841-11	METAL CHIP	47K	5%	1/10W (EC79)
R134	1-216-841-11	METAL CHIP	47K	5%	1/10W (EC79)
R135	1-216-823-11	METAL CHIP	1.5K	5%	1/10W (EC79)
R136	1-216-823-11	METAL CHIP	1.5K	5%	1/10W (EC79)
R141	1-216-822-11	METAL CHIP	1.2K	5%	1/10W
R142	1-216-822-11	METAL CHIP	1.2K	5%	1/10W
R143	1-216-837-11	METAL CHIP	22K	5%	1/10W
R144	1-216-837-11	METAL CHIP	22K	5%	1/10W
R145	1-216-825-11	METAL CHIP	2.2K	5%	1/10W
R146	1-216-825-11	METAL CHIP	2.2K	5%	1/10W
R151	1-216-822-11	METAL CHIP	1.2K	5%	1/10W (EC79)
R152	1-216-822-11	METAL CHIP	1.2K	5%	1/10W (EC79)
R153	1-216-837-11	METAL CHIP	22K	5%	1/10W (EC79)
R154	1-216-837-11	METAL CHIP	22K	5%	1/10W (EC79)
R155	1-216-825-11	METAL CHIP	2.2K	5%	1/10W (EC79)
R156	1-216-825-11	METAL CHIP	2.2K	5%	1/10W (EC79)
R160	1-216-813-11	METAL CHIP	220	5%	1/10W
R161	1-216-813-11	METAL CHIP	220	5%	1/10W
R162	1-216-813-11	METAL CHIP	220	5%	1/10W
R163	1-216-813-11	METAL CHIP	220	5%	1/10W
R164	1-216-813-11	METAL CHIP	220	5%	1/10W (EC79)
R165	1-216-813-11	METAL CHIP	220	5%	1/10W (EC79)
R166	1-216-813-11	METAL CHIP	220	5%	1/10W (EC79)
R167	1-216-813-11	METAL CHIP	220	5%	1/10W (EC79)

****

3CH AMP BOARD (EC99)
****

< CAPACITOR >

C201	1-126-960-11	ELECT	1uF	20%	50V
C202	1-126-960-11	ELECT	1uF	20%	50V
C203	1-164-315-11	CERAMIC CHIP	470PF	5%	50V
C204	1-164-315-11	CERAMIC CHIP	470PF	5%	50V
C205	1-162-927-11	CERAMIC CHIP	100PF	5%	50V
C206	1-162-927-11	CERAMIC CHIP	100PF	5%	50V
C207	1-126-960-11	ELECT	1uF	20%	50V
C208	1-126-960-11	ELECT	1uF	20%	50V
C209	1-162-908-11	CERAMIC CHIP	3PF	0.25PF	50V
C210	1-162-908-11	CERAMIC CHIP	3PF	0.25PF	50V
C211	1-126-960-11	ELECT	1uF	20%	50V
C212	1-164-315-11	CERAMIC CHIP	470PF	5%	50V
C213	1-162-927-11	CERAMIC CHIP	100PF	5%	50V
C214	1-126-947-11	ELECT	47uF	20%	35V
C215	1-162-908-11	CERAMIC CHIP	3PF	0.25PF	50V
C216	1-162-968-11	CERAMIC CHIP	0.0047uF	10%	50V
C217	1-162-970-11	CERAMIC CHIP	0.01uF	10%	25V
C218	1-162-970-11	CERAMIC CHIP	0.01uF	10%	25V
C219	1-126-968-11	ELECT	100uF	20%	50V
C220	1-126-968-11	ELECT	100uF	20%	50V
C223	1-165-621-91	CERAMIC CHIP	0.1uF		50V
C224	1-165-621-91	CERAMIC CHIP	0.1uF		50V
C225	1-100-566-91	CERAMIC CHIP	0.1uF	10%	25V
C226	1-100-566-91	CERAMIC CHIP	0.1uF	10%	25V
C227	1-100-566-91	CERAMIC CHIP	0.1uF	10%	25V
C228	1-100-566-91	CERAMIC CHIP	0.1uF	10%	25V
C229	1-165-621-91	CERAMIC CHIP	0.1uF		50V
C230	1-165-621-91	CERAMIC CHIP	0.1uF		50V

< CONNECTOR >

CN203	1-568-826-11	CONNECTOR, FFC 7P
CN205	1-820-831-11	HOLDER, CABLE 7P

3CH AMP CD

Ref. No.	Part No.	Description				Remark
		< DIODE >				
D201	6-500-335-01	DIODE MC2838-T112-1				
D202	6-501-817-01	DIODE MA2J1110GLS0				
D203	6-501-817-01	DIODE MA2J1110GLS0				
		< IC >				
IC201	6-712-281-01	IC STK433-320-E				
		< JUMPER RESISTOR >				
JR201	1-216-864-11	SHORT CHIP	0			
JR202	1-216-864-11	SHORT CHIP	0			
		< TRANSISTOR >				
Q201	6-551-270-01	TRANSISTOR	2SA2026			
Q202	6-551-270-01	TRANSISTOR	2SA2026			
Q203	6-551-270-01	TRANSISTOR	2SA2026			
		< RESISTOR >				
R203	1-216-823-11	METAL CHIP	1.5K	5%	1/10W	
R204	1-216-823-11	METAL CHIP	1.5K	5%	1/10W	
R205	1-216-829-11	METAL CHIP	4.7K	5%	1/10W	
R206	1-216-829-11	METAL CHIP	4.7K	5%	1/10W	
R207	1-216-841-11	METAL CHIP	47K	5%	1/10W	
R208	1-216-841-11	METAL CHIP	47K	5%	1/10W	
R209	1-216-823-11	METAL CHIP	1.5K	5%	1/10W	
R210	1-216-823-11	METAL CHIP	1.5K	5%	1/10W	
R213	1-216-841-11	METAL CHIP	47K	5%	1/10W	
R214	1-216-841-11	METAL CHIP	47K	5%	1/10W	
R216	1-216-813-11	METAL CHIP	220	5%	1/10W	
R217	1-216-837-11	METAL CHIP	22K	5%	1/10W	
R218	1-216-841-11	METAL CHIP	47K	5%	1/10W	
R219	1-216-821-11	METAL CHIP	1K	5%	1/10W	
R220	1-216-817-11	METAL CHIP	470	5%	1/10W	
R221	1-216-841-11	METAL CHIP	47K	5%	1/10W	
R222	1-216-809-11	METAL CHIP	100	5%	1/10W	
R223	1-216-821-11	METAL CHIP	1K	5%	1/10W	
R225	1-216-813-11	METAL CHIP	220	5%	1/10W	
R226	1-216-813-11	METAL CHIP	220	5%	1/10W	
R227	1-216-813-11	METAL CHIP	220	5%	1/10W	
R228	1-216-813-11	METAL CHIP	220	5%	1/10W	
⚠ R229	1-216-361-31	METAL OXIDE	0.22	5%	2W	F
⚠ R230	1-216-361-31	METAL OXIDE	0.22	5%	2W	F
R231	1-216-822-11	METAL CHIP	1.2K	5%	1/10W	
R232	1-216-822-11	METAL CHIP	1.2K	5%	1/10W	
R233	1-216-837-11	METAL CHIP	22K	5%	1/10W	
R234	1-216-837-11	METAL CHIP	22K	5%	1/10W	
R235	1-216-825-11	METAL CHIP	2.2K	5%	1/10W	
R236	1-216-825-11	METAL CHIP	2.2K	5%	1/10W	
⚠ R237	1-216-365-61	METAL OXIDE	0.47	5%	2W	F
⚠ R238	1-216-365-61	METAL OXIDE	0.47	5%	2W	F
R239	1-216-823-11	METAL CHIP	1.5K	5%	1/10W	
R240	1-216-837-11	METAL CHIP	22K	5%	1/10W	
R241	1-216-825-11	METAL CHIP	2.2K	5%	1/10W	
R242	1-216-823-11	METAL CHIP	1.5K	5%	1/10W	
R244	1-216-864-11	SHORT CHIP	0			
R245	1-216-817-11	METAL CHIP	470	5%	1/10W	
R246	1-216-817-11	METAL CHIP	470	5%	1/10W	

****

Ref. No.	Part No.	Description			
	A-1217-914-A	CD BOARD, COMPLETE			
		**********			
		< CAPACITOR >			
C100	1-164-360-11	CERAMIC CHIP	0.1uF		16V
C101	1-164-360-11	CERAMIC CHIP	0.1uF		16V
C102	1-164-360-11	CERAMIC CHIP	0.1uF		16V
C103	1-164-360-11	CERAMIC CHIP	0.1uF		16V
C104	1-164-360-11	CERAMIC CHIP	0.1uF		16V
C105	1-164-360-11	CERAMIC CHIP	0.1uF		16V
C106	1-128-995-21	ELECT CHIP	100uF	20%	10V
C107	1-164-360-11	CERAMIC CHIP	0.1uF		16V
C108	1-164-360-11	CERAMIC CHIP	0.1uF		16V
C109	1-164-360-11	CERAMIC CHIP	0.1uF		16V
C110	1-164-360-11	CERAMIC CHIP	0.1uF		16V
C112	1-164-360-11	CERAMIC CHIP	0.1uF		16V
C113	1-164-360-11	CERAMIC CHIP	0.1uF		16V
C115	1-124-778-00	ELECT CHIP	22uF	20%	6.3V
C116	1-164-360-11	CERAMIC CHIP	0.1uF		16V
C117	1-164-227-11	CERAMIC CHIP	0.022uF	10%	25V
C118	1-162-970-11	CERAMIC CHIP	0.01uF	10%	25V
C119	1-164-227-11	CERAMIC CHIP	0.022uF	10%	25V
C120	1-162-970-11	CERAMIC CHIP	0.01uF	10%	25V
C122	1-164-315-11	CERAMIC CHIP	470PF	5%	50V
C123	1-164-315-11	CERAMIC CHIP	470PF	5%	50V
C124	1-162-968-11	CERAMIC CHIP	0.0047uF	10%	50V
C125	1-162-968-11	CERAMIC CHIP	0.0047uF	10%	50V
C126	1-107-826-11	CERAMIC CHIP	0.1uF	10%	16V
C127	1-162-966-11	CERAMIC CHIP	0.0022uF	10%	50V
C128	1-162-910-11	CERAMIC CHIP	5PF	0.25PF	50V
C130	1-162-910-11	CERAMIC CHIP	5PF	0.25PF	50V
C132	1-164-360-11	CERAMIC CHIP	0.1uF		16V
C133	1-107-826-11	CERAMIC CHIP	0.1uF	10%	16V
C136	1-162-923-11	CERAMIC CHIP	47PF	5%	50V
C137	1-162-970-11	CERAMIC CHIP	0.01uF	10%	25V
C138	1-164-315-11	CERAMIC CHIP	470PF	5%	50V
C139	1-162-970-11	CERAMIC CHIP	0.01uF	10%	25V
C140	1-162-970-11	CERAMIC CHIP	0.01uF	10%	25V
C141	1-162-966-11	CERAMIC CHIP	0.0022uF	10%	50V
C142	1-107-826-11	CERAMIC CHIP	0.1uF	10%	16V
C143	1-162-970-11	CERAMIC CHIP	0.01uF	10%	25V
C144	1-107-826-11	CERAMIC CHIP	0.1uF	10%	16V
C145	1-162-970-11	CERAMIC CHIP	0.01uF	10%	25V
C146	1-164-315-11	CERAMIC CHIP	470PF	5%	50V
C147	1-107-826-11	CERAMIC CHIP	0.1uF	10%	16V
C148	1-162-923-11	CERAMIC CHIP	47PF	5%	50V
C149	1-162-919-11	CERAMIC CHIP	22PF	5%	50V
C150	1-162-964-11	CERAMIC CHIP	0.001uF	10%	50V
C151	1-164-315-11	CERAMIC CHIP	470PF	5%	50V
C152	1-164-315-11	CERAMIC CHIP	470PF	5%	50V
C153	1-164-360-11	CERAMIC CHIP	0.1uF		16V
C201	1-128-995-21	ELECT CHIP	100uF	20%	10V
C202	1-128-995-21	ELECT CHIP	100uF	20%	10V
C204	1-164-360-11	CERAMIC CHIP	0.1uF		16V
C205	1-164-360-11	CERAMIC CHIP	0.1uF		16V
C206	1-165-908-11	CERAMIC CHIP	1uF	10%	10V
C207	1-165-908-11	CERAMIC CHIP	1uF	10%	10V
C301	1-164-360-11	CERAMIC CHIP	0.1uF		16V
C302	1-137-710-91	CERAMIC CHIP	10uF	20%	6.3V
C303	1-137-710-91	CERAMIC CHIP	10uF	20%	6.3V

Ref. No.	Part No.	Description			Remark
C306	1-128-995-21	ELECT CHIP	100uF	20%	10V
C307	1-165-908-11	CERAMIC CHIP	1uF	10%	10V
C309	1-162-964-11	CERAMIC CHIP	0.001uF	10%	50V
C401	1-128-394-11	ELECT CHIP	220uF	20%	10V
C403	1-164-360-11	CERAMIC CHIP	0.1uF		16V
C404	1-164-360-11	CERAMIC CHIP	0.1uF		16V
C405	1-164-360-11	CERAMIC CHIP	0.1uF		16V
		< CONNECTOR >			
CN201	1-784-833-51	CONNECTOR, FFC (LIF (NON-ZIF)) 21P			
CN301	1-770-425-51	CONNECTOR, FFC/FPC 16P			
		< IC >			
IC101	6-709-624-01	IC TC94A70FG-006			
IC201	6-710-808-01	IC TK63115SCL-G@GT			
IC401	6-710-637-01	IC BA5826SFP-E2			
		< TRANSISTOR >			
Q301	6-551-120-01	TRANSISTOR	2SA2119K		
		< RESISTOR >			
R101	1-216-813-11	METAL CHIP	220	5%	1/10W
R102	1-216-833-11	METAL CHIP	10K	5%	1/10W
R104	1-216-295-91	SHORT CHIP	0		
R105	1-216-857-11	METAL CHIP	1M	5%	1/10W
R106	1-216-821-11	METAL CHIP	1K	5%	1/10W
R108	1-216-864-11	SHORT CHIP	0		
R110	1-216-833-11	METAL CHIP	10K	5%	1/10W
R111	1-216-809-11	METAL CHIP	100	5%	1/10W
R112	1-216-809-11	METAL CHIP	100	5%	1/10W
R113	1-216-833-11	METAL CHIP	10K	5%	1/10W
R114	1-216-833-11	METAL CHIP	10K	5%	1/10W
R118	1-216-845-11	METAL CHIP	100K	5%	1/10W
R120	1-216-864-11	SHORT CHIP	0		
R125	1-216-864-11	SHORT CHIP	0		
R126	1-216-864-11	SHORT CHIP	0		
R127	1-216-864-11	SHORT CHIP	0		
R128	1-216-853-11	METAL CHIP	470K	5%	1/10W
R129	1-216-821-11	METAL CHIP	1K	5%	1/10W
R130	1-216-829-11	METAL CHIP	4.7K	5%	1/10W
R134	1-216-857-11	METAL CHIP	1M	5%	1/10W
R135	1-216-853-11	METAL CHIP	470K	5%	1/10W
R136	1-216-837-11	METAL CHIP	22K	5%	1/10W
R139	1-216-841-11	METAL CHIP	47K	5%	1/10W
R140	1-216-864-11	SHORT CHIP	0		
R142	1-216-837-11	METAL CHIP	22K	5%	1/10W
R143	1-216-841-11	METAL CHIP	47K	5%	1/10W
R144	1-216-837-11	METAL CHIP	22K	5%	1/10W
R145	1-216-864-11	SHORT CHIP	0		
R146	1-216-864-11	SHORT CHIP	0		
R147	1-216-864-11	SHORT CHIP	0		
R148	1-216-864-11	SHORT CHIP	0		
R149	1-216-864-11	SHORT CHIP	0		
R150	1-216-864-11	SHORT CHIP	0		
R151	1-216-864-11	SHORT CHIP	0		
R153	1-216-857-11	METAL CHIP	1M	5%	1/10W
R154	1-216-857-11	METAL CHIP	1M	5%	1/10W
R155	1-216-805-11	METAL CHIP	47	5%	1/10W
R156	1-216-809-11	METAL CHIP	100	5%	1/10W
R157	1-216-809-11	METAL CHIP	100	5%	1/10W

Ref. No.	Part No.	Description			Remark
R201	1-216-295-91	SHORT CHIP	0		
R202	1-216-295-91	SHORT CHIP	0		
R203	1-216-809-11	METAL CHIP	100	5%	1/10W
R204	1-216-809-11	METAL CHIP	100	5%	1/10W
R205	1-216-809-11	METAL CHIP	100	5%	1/10W
R206	1-216-809-11	METAL CHIP	100	5%	1/10W
R207	1-216-809-11	METAL CHIP	100	5%	1/10W
R208	1-216-809-11	METAL CHIP	100	5%	1/10W
R209	1-216-809-11	METAL CHIP	100	5%	1/10W
R210	1-216-809-11	METAL CHIP	100	5%	1/10W
R211	1-216-809-11	METAL CHIP	100	5%	1/10W
R212	1-216-809-11	METAL CHIP	100	5%	1/10W
R218	1-216-845-11	METAL CHIP	100K	5%	1/10W
R219	1-216-845-11	METAL CHIP	100K	5%	1/10W
R220	1-216-845-11	METAL CHIP	100K	5%	1/10W
R221	1-216-845-11	METAL CHIP	100K	5%	1/10W
R222	1-216-845-11	METAL CHIP	100K	5%	1/10W
R223	1-216-845-11	METAL CHIP	100K	5%	1/10W
R301	1-216-845-11	METAL CHIP	100K	5%	1/10W
R302	1-216-864-11	SHORT CHIP	0		
R303	1-216-789-11	METAL CHIP	2.2	5%	1/10W
R304	1-216-789-11	METAL CHIP	2.2	5%	1/10W
R402	1-216-825-11	METAL CHIP	2.2K	5%	1/10W
R405	1-216-833-11	METAL CHIP	10K	5%	1/10W
R408	1-216-825-11	METAL CHIP	2.2K	5%	1/10W
R414	1-216-829-11	METAL CHIP	4.7K	5%	1/10W
R415	1-216-841-11	METAL CHIP	47K	5%	1/10W
		< VIBRATOR >			
X102	1-795-101-21	VIBRATOR, CERAMIC (16.9344MHz)			

****

JACK BOARD
****

		< CAPACITOR >			
C495	1-162-964-11	CERAMIC CHIP	0.001uF	10%	50V
C496	1-162-964-11	CERAMIC CHIP	0.001uF	10%	50V
		< CONNECTOR >			
CN496	1-784-770-11	CONNECTOR, FFC 9P			
		< DIODE >			
D491	8-719-062-51	DIODE 1PS226-115			
		< JACK >			
J491	1-566-822-51	JACK (PHONES)			
J492	1-815-629-21	JACK (PC IN)			
		< RESISTOR >			
R491	1-216-837-11	METAL CHIP	22K	5%	1/10W
R492	1-216-837-11	METAL CHIP	22K	5%	1/10W

****

KEY BOARD
****

		< CONNECTOR >			
CN313	1-815-551-11	PIN, CONNECTOR (PWB) 3P			

KEY **MAIN**

Ref. No.	Part No.	Description			Remark
		< RESISTOR >			
R404	1-216-822-11	METAL CHIP	1.2K	5%	1/10W
R405	1-216-823-11	METAL CHIP	1.5K	5%	1/10W
R406	1-216-825-11	METAL CHIP	2.2K	5%	1/10W
R407	1-216-826-11	METAL CHIP	2.7K	5%	1/10W
R408	1-216-828-11	METAL CHIP	3.9K	5%	1/10W
R409	1-218-867-11	METAL CHIP	6.8K	0.5%	1/10W
R410	1-216-835-11	METAL CHIP	15K	5%	1/10W
R411	1-216-841-11	METAL CHIP	47K	5%	1/10W
		< SWITCH >			
SW311	1-771-410-21	SWITCH, TACTILE (■)			
SW321	1-771-410-21	SWITCH, TACTILE (CD)			
SW322	1-771-410-21	SWITCH, TACTILE (USB)			
SW323	1-771-410-21	SWITCH, TACTILE (FOLDER +)			
SW324	1-771-410-21	SWITCH, TACTILE (TUNING +, ►►, ▷▷II)			
SW325	1-771-410-21	SWITCH, TACTILE (DSGX)			
SW326	1-771-410-21	SWITCH, TACTILE (DISC 1)			
SW327	1-771-410-21	SWITCH, TACTILE (DISC 2)			
SW328	1-771-410-21	SWITCH, TACTILE (DISC 3)			
SW329	1-771-410-21	SWITCH, TACTILE (⏏)			
**********					
	A-1599-413-A	MAIN BOARD, COMPLETE (EC99: AEP)			
	A-1599-449-A	MAIN BOARD, COMPLETE (EC79: AEP)			
	A-1599-465-A	MAIN BOARD, COMPLETE (EC69: AEP)			
	A-1702-676-A	MAIN BOARD, COMPLETE (EC69: E2, E51, AR)			
	A-1706-659-A	MAIN BOARD, COMPLETE (EC99: E2, E51, AR)			
	A-1706-661-A	MAIN BOARD, COMPLETE (EC79: E2, E51, AR)			
	A-1718-681-A	MAIN BOARD, COMPLETE (EC99: MX)			
	A-1718-683-A	MAIN BOARD, COMPLETE (EC79: MX)			
	A-1718-685-A	MAIN BOARD, COMPLETE (EC69: MX)			
		**********			
	7-685-647-79	SCREW +BVTP 3X10 TYPE2 N-S (EC99)			
		< CAPACITOR >			
C601	1-126-962-11	ELECT	3.3uF	20%	50V
C602	1-126-947-11	ELECT	47uF	20%	35V
C603	1-162-968-11	CERAMIC CHIP	0.0047uF	10%	50V (EC79/EC99)
C604	1-100-566-91	CERAMIC CHIP	0.1uF	10%	25V (EC79/EC99)
C605	1-100-566-91	CERAMIC CHIP	0.1uF	10%	25V (EC79/EC99)
C606	1-162-968-11	CERAMIC CHIP	0.0047uF	10%	50V (EC79/EC99)
C607	1-100-566-91	CERAMIC CHIP	0.1uF	10%	25V
C608	1-100-566-91	CERAMIC CHIP	0.1uF	10%	25V
C609	1-162-968-11	CERAMIC CHIP	0.0047uF	10%	50V
C610	1-162-968-11	CERAMIC CHIP	0.0047uF	10%	50V
C611	1-127-715-11	CERAMIC CHIP	0.22uF	10%	16V
C612	1-127-715-11	CERAMIC CHIP	0.22uF	10%	16V
C613	1-126-964-11	ELECT	10uF	20%	50V
C614	1-126-963-11	ELECT	4.7uF	20%	50V
C615	1-100-566-91	CERAMIC CHIP	0.1uF	10%	25V (EC79/EC99)
C616	1-100-566-91	CERAMIC CHIP	0.1uF	10%	25V (EC79/EC99)
C617	1-100-566-91	CERAMIC CHIP	0.1uF	10%	25V
C618	1-100-566-91	CERAMIC CHIP	0.1uF	10%	25V
C619	1-162-970-11	CERAMIC CHIP	0.01uF	10%	25V
C620	1-104-658-91	ELECT	100uF	20%	10V
C621	1-137-749-11	MYLAR	0.1uF		100V
C622	1-126-974-11	ELECT	3300uF	20%	50V (EC79: AEP/EC99: AEP)
C622	1-128-550-11	ELECT	2200uF	20%	50V (EC69)
C623	1-137-749-11	MYLAR	0.1uF		100V
C626	1-126-974-11	ELECT	3300uF	20%	50V (EC79: AEP/EC99: AEP)
C626	1-128-550-11	ELECT	2200uF	20%	50V (EC69)
C627	1-126-943-11	ELECT	2200uF	20%	25V
C628	1-126-942-61	ELECT	1000uF	20%	25V
C629	1-162-968-11	CERAMIC CHIP	0.0047uF	10%	50V
C630	1-126-947-11	ELECT	47uF	20%	35V
C631	1-126-933-11	ELECT	100uF	20%	16V
C632	1-126-963-11	ELECT	4.7uF	20%	50V
C633	1-165-176-11	CERAMIC CHIP	0.047uF	10%	16V
C634	1-165-176-11	CERAMIC CHIP	0.047uF	10%	16V
C636	1-126-960-11	ELECT	1uF	20%	50V
C637	1-165-176-11	CERAMIC CHIP	0.047uF	10%	16V
C638	1-165-176-11	CERAMIC CHIP	0.047uF	10%	16V
C639	1-162-966-11	CERAMIC CHIP	0.0022uF	10%	50V
C640	1-162-966-11	CERAMIC CHIP	0.0022uF	10%	50V
C641	1-126-962-11	ELECT	3.3uF	20%	50V
C642	1-164-227-11	CERAMIC CHIP	0.022uF	10%	25V
C644	1-126-960-11	ELECT	1uF	20%	50V
C645	1-162-964-11	CERAMIC CHIP	0.001uF	10%	50V
C646	1-126-960-11	ELECT	1uF	20%	50V
C647	1-162-966-11	CERAMIC CHIP	0.0022uF	10%	50V
C648	1-125-837-91	CERAMIC CHIP	1uF	10%	6.3V
C649	1-162-960-11	CERAMIC CHIP	220PF	10%	50V
C650	1-125-837-91	CERAMIC CHIP	1uF	10%	6.3V
C652	1-125-837-91	CERAMIC CHIP	1uF	10%	6.3V
C654	1-125-837-91	CERAMIC CHIP	1uF	10%	6.3V
C655	1-162-960-11	CERAMIC CHIP	220PF	10%	50V
C656	1-125-837-91	CERAMIC CHIP	1uF	10%	6.3V
C657	1-162-966-11	CERAMIC CHIP	0.0022uF	10%	50V
C658	1-125-837-91	CERAMIC CHIP	1uF	10%	6.3V
C661	1-126-964-11	ELECT	10uF	20%	50V
C662	1-162-967-11	CERAMIC CHIP	0.0033uF	10%	50V
C663	1-126-960-11	ELECT	1uF	20%	50V
C664	1-126-960-11	ELECT	1uF	20%	50V
C665	1-126-960-11	ELECT	1uF	20%	50V
C666	1-162-964-11	CERAMIC CHIP	0.001uF	10%	50V
C667	1-126-933-11	ELECT	100uF	20%	16V
C669	1-126-923-91	ELECT	220uF	20%	10V
C671	1-126-933-11	ELECT	100uF	20%	16V
C674	1-164-227-11	CERAMIC CHIP	0.022uF	10%	25V
C675	1-126-960-11	ELECT	1uF	20%	50V
C676	1-126-960-11	ELECT	1uF	20%	50V
C677	1-119-940-51	ELECT	4700uF	20%	50V (EC79: E2, E51, MX, AR/EC99: E2, E51, MX, AR)
C678	1-119-940-51	ELECT	4700uF	20%	50V (EC79: E2, E51, MX, AR/EC99: E2, E51, MX, AR)
C680	1-162-966-11	CERAMIC CHIP	0.0022uF	10%	50V
C681	1-162-966-11	CERAMIC CHIP	0.0022uF	10%	50V
C682	1-162-966-11	CERAMIC CHIP	0.0022uF	10%	50V
C683	1-162-966-11	CERAMIC CHIP	0.0022uF	10%	50V
C684	1-100-597-91	CERAMIC CHIP	0.1uF	10%	25V (EC79/EC99)

MAIN

Ref. No.	Part No.	Description			Remark
C684	1-110-563-11	CERAMIC CHIP	0.068uF	10%	16V (EC69)
C685	1-100-756-91	CERAMIC CHIP	0.047uF	10%	50V (EC69: AEP)
C685	1-110-563-11	CERAMIC CHIP	0.068uF	10%	16V (EXCEPT EC69: AEP)
C686	1-100-597-91	CERAMIC CHIP	0.1uF	10%	25V (EC79/EC99)
C686	1-110-563-11	CERAMIC CHIP	0.068uF	10%	16V (EC69)
C687	1-100-756-91	CERAMIC CHIP	0.047uF	10%	50V (EC69: AEP)
C687	1-110-563-11	CERAMIC CHIP	0.068uF	10%	16V (EXCEPT EC69: AEP)
C688	1-126-964-11	ELECT	10uF	20%	50V
C689	1-162-962-11	CERAMIC CHIP	470PF	10%	50V
C690	1-162-966-11	CERAMIC CHIP	0.0022uF	10%	50V
C692	1-162-970-11	CERAMIC CHIP	0.01uF	10%	25V
C694	1-162-964-11	CERAMIC CHIP	0.001uF	10%	50V
C695	1-125-837-91	CERAMIC CHIP	1uF	10%	6.3V
C696	1-125-837-91	CERAMIC CHIP	1uF	10%	6.3V
C699	1-162-964-11	CERAMIC CHIP	0.001uF	10%	50V
C700	1-162-964-11	CERAMIC CHIP	0.001uF	10%	50V
C701	1-100-566-91	CERAMIC CHIP	0.1uF	10%	25V (EC99)
C702	1-100-566-91	CERAMIC CHIP	0.1uF	10%	25V (EC99)
C703	1-162-966-11	CERAMIC CHIP	0.0022uF	10%	50V
C704	1-162-962-11	CERAMIC CHIP	470PF	10%	50V
C705	1-126-964-11	ELECT	10uF	20%	50V (EC99)
C706	1-126-933-11	ELECT	100uF	20%	16V (EC99)
C707	1-126-960-11	ELECT	1uF	20%	50V (EC99)
C708	1-107-726-91	CERAMIC CHIP	0.01uF	10%	16V (EC99)
C709	1-137-190-91	FILM	0.22uF	5%	50V (EC99)
C710	1-137-190-91	FILM	0.22uF	5%	50V (EC99)
C711	1-137-190-91	FILM	0.22uF	5%	50V (EC99)
C712	1-136-161-00	FILM	0.047uF	5%	50V (EC99)
C713	1-162-962-11	CERAMIC CHIP	470PF	10%	50V
C715	1-164-156-11	CERAMIC CHIP	0.1uF		25V
C760	1-104-665-11	ELECT	100uF	20%	25V
C761	1-126-935-11	ELECT	470uF	20%	16V
C762	1-126-925-91	ELECT	470uF	20%	10V
C763	1-164-315-11	CERAMIC CHIP	470PF	5%	50V
C764	1-126-964-11	ELECT	10uF	20%	50V
C765	1-162-964-11	CERAMIC CHIP	0.001uF	10%	50V
C766	1-162-968-11	CERAMIC CHIP	0.0047uF	10%	50V
C786	1-125-837-91	CERAMIC CHIP	1uF	10%	6.3V
C787	1-125-837-91	CERAMIC CHIP	1uF	10%	6.3V
C802	1-126-933-11	ELECT	100uF	20%	16V
C803	1-125-837-91	CERAMIC CHIP	1uF	10%	6.3V
C804	1-162-918-11	CERAMIC CHIP	18PF	5%	50V
C805	1-117-863-11	CERAMIC CHIP	0.47uF	10%	6.3V
C806	1-162-962-11	CERAMIC CHIP	470PF	10%	50V
C807	1-125-837-91	CERAMIC CHIP	1uF	10%	6.3V
C808	1-162-918-11	CERAMIC CHIP	18PF	5%	50V

Ref. No.	Part No.	Description			Remark
C809	1-162-964-11	CERAMIC CHIP	0.001uF	10%	50V
C810	1-162-964-11	CERAMIC CHIP	0.001uF	10%	50V
C811	1-162-964-11	CERAMIC CHIP	0.001uF	10%	50V
C814	1-162-968-11	CERAMIC CHIP	0.0047uF	10%	50V
C815	1-162-968-11	CERAMIC CHIP	0.0047uF	10%	50V
C816	1-162-970-11	CERAMIC CHIP	0.01uF	10%	25V
C817	1-162-970-11	CERAMIC CHIP	0.01uF	10%	25V
C819	1-162-915-11	CERAMIC CHIP	10PF	0.5PF	50V
C820	1-162-910-11	CERAMIC CHIP	5PF	0.25PF	50V
C821	1-162-966-11	CERAMIC CHIP	0.0022uF	10%	50V
C822	1-126-965-91	ELECT	22uF	20%	50V
C823	1-126-923-91	ELECT	220uF	20%	10V
C824	1-165-908-11	CERAMIC CHIP	1uF	10%	10V
C826	1-162-964-11	CERAMIC CHIP	0.001uF	10%	50V
C827	1-165-176-11	CERAMIC CHIP	0.047uF	10%	16V
C828	1-162-927-11	CERAMIC CHIP	100PF	5%	50V
C829	1-117-863-11	CERAMIC CHIP	0.47uF	10%	6.3V
C830	1-162-907-11	CERAMIC CHIP	2PF	0.25PF	50V
C831	1-117-863-11	CERAMIC CHIP	0.47uF	10%	6.3V
C832	1-117-863-11	CERAMIC CHIP	0.47uF	10%	6.3V
C833	1-126-923-91	ELECT	220uF	20%	10V
C834	1-162-915-11	CERAMIC CHIP	10PF	0.5PF	50V
C835	1-165-176-11	CERAMIC CHIP	0.047uF	10%	16V
C836	1-164-227-11	CERAMIC CHIP	0.022uF	10%	25V
C837	1-162-915-11	CERAMIC CHIP	10PF	0.5PF	50V
C838	1-162-964-11	CERAMIC CHIP	0.001uF	10%	50V
C840	1-107-826-11	CERAMIC CHIP	0.1uF	10%	16V
C841	1-162-964-11	CERAMIC CHIP	0.001uF	10%	50V
C843	1-164-156-11	CERAMIC CHIP	0.1uF		25V
C844	1-107-826-11	CERAMIC CHIP	0.1uF	10%	16V
C845	1-115-467-11	CERAMIC CHIP	0.22uF	10%	10V
C846	1-162-970-11	CERAMIC CHIP	0.01uF	10%	25V
C847	1-107-826-11	CERAMIC CHIP	0.1uF	10%	16V
C848	1-164-156-11	CERAMIC CHIP	0.1uF		25V
C850	1-164-156-11	CERAMIC CHIP	0.1uF		25V
C851	1-164-392-11	CERAMIC CHIP	390PF	5%	50V
C853	1-107-826-11	CERAMIC CHIP	0.1uF	10%	16V (EC99)
		< FILTER >			
CF801	1-781-962-21	FILTER, CERAMIC			
		< CONNECTOR >			
CN601	1-819-131-11	PIN, CONNECTOR 3P			
CN603	1-784-766-11	CONNECTOR, FFC 5P			
CN604	1-819-136-11	PIN, CONNECTOR 8P (EC69/EC79)			
CN605	1-784-770-11	CONNECTOR, FFC 9P			
CN608	1-779-289-11	CONNECTOR, FFC (LIF (NON-ZIF)) 21P			
CN609	1-815-444-11	PIN, CONNECTOR (PWB) 3P			
CN610	1-568-844-11	CONNECTOR, FFC 29P			
CN613	1-784-774-11	CONNECTOR, FFC 13P			
CN632	1-819-135-11	PIN, CONNECTOR 7P (EC79/EC99)			
CN633	1-819-133-11	PIN, CONNECTOR (EC69/EC99)			
CN643	1-568-826-11	CONNECTOR, FFC 7P (EC99)			
CN654	1-819-138-11	PIN, CONNECTOR 10P (EC99)			
* CN801	1-506-680-11	PLUG, CONNECTOR (2.5mm) 3P			(ANTENNA FM/AM)

MAIN

Ref. No.	Part No.	Description	Remark
		< DIODE >	
D601	6-500-335-01	DIODE MC2838-T112-1	
D602	6-500-335-01	DIODE MC2838-T112-1	
D603	6-501-817-01	DIODE MA2J1110GLS0 (EC79/EC99)	
D604	6-501-817-01	DIODE MA2J1110GLS0	
D605	6-501-817-01	DIODE MA2J1110GLS0	
D606	6-500-334-01	DIODE MC2836-T112-1	
D607	6-502-619-01	DIODE 1N5402-C532-2 (EC69/EC79)	
D608	6-502-619-01	DIODE 1N5402-C532-2 (EC69/EC79)	
D609	6-502-619-01	DIODE 1N5402-C532-2 (EC69/EC79)	
D610	6-502-619-01	DIODE 1N5402-C532-2 (EC69/EC79)	
D611	6-501-582-01	DIODE 1N4002-A2	
D612	6-501-582-01	DIODE 1N4002-A2	
D613	6-500-360-01	DIODE D10XB20 (EC99)	
D614	6-501-817-01	DIODE MA2J1110GLS0	
D615	6-501-582-01	DIODE 1N4002-A2	
D617	6-500-335-01	DIODE MC2838-T112-1	
D618	6-501-719-01	DIODE MAZ8039GHLS0	
D619	6-501-582-01	DIODE 1N4002-A2	
D620	6-501-582-01	DIODE 1N4002-A2	
D621	6-501-722-01	DIODE MAZ8043GMLS0	
D622	6-501-760-01	DIODE MAZ8100GMLS0	
D627	8-719-062-51	DIODE 1PS226-115	
D628	6-501-817-01	DIODE MA2J1110GLS0	
D629	6-501-582-01	DIODE 1N4002-A2 (EC79/EC99)	
D630	6-501-582-01	DIODE 1N4002-A2 (EC79/EC99)	
D631	6-501-817-01	DIODE MA2J1110GLS0	
D701	6-502-161-01	DIODE RB055L-40TE25	
D702	6-501-817-01	DIODE MA2J1110GLS0 (EC99)	
D791	6-501-817-01	DIODE MA2J1110GLS0	
D801	6-502-623-01	DIODE SVC389	
D802	8-719-062-51	DIODE 1PS226-115	
D803	6-501-369-01	DIODE SVC230-TB-E	
D804	6-501-369-01	DIODE SVC230-TB-E	
D805	8-719-062-51	DIODE 1PS226-115	
D806	8-719-062-51	DIODE 1PS226-115	
		< FILTER >	
FL801	1-760-393-11	FILTER, CERAMIC	
FL803	1-236-711-21	FILTER, BAND PASS	
		< IC >	
IC602	6-712-055-01	IC BD3499FV-E2	
IC701	6-600-113-01	IC NJM2368V (TE2)	
IC801	6-708-840-01	IC LV23003VA	
		< JUMPER RESISTOR >	
JR600	1-216-864-11	SHORT CHIP 0 (EC99)	
JR601	1-216-864-11	SHORT CHIP 0	
JR602	1-216-864-11	SHORT CHIP 0	
JR603	1-216-864-11	SHORT CHIP 0	
JR604	1-216-864-11	SHORT CHIP 0	
JR605	1-216-864-11	SHORT CHIP 0	
JR607	1-216-864-11	SHORT CHIP 0	
JR608	1-216-864-11	SHORT CHIP 0	
JR609	1-216-864-11	SHORT CHIP 0	
JR610	1-216-864-11	SHORT CHIP 0	
JR611	1-216-864-11	SHORT CHIP 0	
JR612	1-216-864-11	SHORT CHIP 0	
JR613	1-216-864-11	SHORT CHIP 0	
JR614	1-216-864-11	SHORT CHIP 0	
JR615	1-216-864-11	SHORT CHIP 0	
JR616	1-216-864-11	SHORT CHIP 0	
JR617	1-216-864-11	SHORT CHIP 0	
JR618	1-216-864-11	SHORT CHIP 0	
JR619	1-216-864-11	SHORT CHIP 0	
JR620	1-216-864-11	SHORT CHIP 0	
JR621	1-216-864-11	SHORT CHIP 0	
		< COIL >	
L601	1-456-107-11	COIL, AIR-CORE (EC79/EC99)	
L602	1-456-107-11	COIL, AIR-CORE (EC79/EC99)	
L603	1-456-107-11	COIL, AIR-CORE	
L604	1-456-107-11	COIL, AIR-CORE	
L605	1-410-509-11	INDUCTOR 10uH	
L701	1-456-467-11	INDUCTOR 100uH	
L702	1-456-107-11	COIL, AIR-CORE (EC99)	
L802	1-457-168-11	COIL, DET	
L803	1-457-162-22	COIL, AIR-CORE	
L804	1-457-163-22	COIL, AIR-CORE	
L805	1-457-161-11	COIL, AM ANTENNA	
L806	1-410-522-11	INDUCTOR 120uH	
		< TRANSISTOR >	
Q601	8-729-037-03	TRANSISTOR KTA1266GR-AT	
Q602	8-729-120-28	TRANSISTOR 2SC1623-L5L6	
Q603	8-729-120-28	TRANSISTOR 2SC1623-L5L6	
Q604	8-729-120-28	TRANSISTOR 2SC1623-L5L6	
Q605	8-729-120-28	TRANSISTOR 2SC1623-L5L6	
Q606	8-729-120-28	TRANSISTOR 2SC1623-L5L6	
Q608	8-729-120-28	TRANSISTOR 2SC1623-L5L6	
Q610	8-729-120-28	TRANSISTOR 2SC1623-L5L6 (EC99)	
Q611	8-729-120-28	TRANSISTOR 2SC1623-L5L6	
Q612	6-551-696-01	TRANSISTOR ISA1235AC1TP-1EF	
Q613	6-551-696-01	TRANSISTOR ISA1235AC1TP-1EF (EC99)	
Q614	6-551-696-01	TRANSISTOR ISA1235AC1TP-1EF (EC99)	
Q618	6-551-696-01	TRANSISTOR ISA1235AC1TP-1EF	
Q619	8-729-120-28	TRANSISTOR 2SC1623-L5L6	
Q622	8-729-120-28	TRANSISTOR 2SC1623-L5L6	
Q624	8-729-036-86	TRANSISTOR KTC3203Y-AT	
Q701	8-729-120-28	TRANSISTOR 2SC1623-L5L6 (EC99)	
Q702	8-729-120-28	TRANSISTOR 2SC1623-L5L6 (EC99)	
Q703	8-729-120-28	TRANSISTOR 2SC1623-L5L6 (EC99)	
Q704	8-729-120-28	TRANSISTOR 2SC1623-L5L6 (EC99)	
Q705	8-729-120-28	TRANSISTOR 2SC1623-L5L6 (EC99)	
Q706	8-729-040-76	TRANSISTOR KTA1273-Y-AT	
Q707	8-729-040-76	TRANSISTOR KTA1273-Y-AT	
Q708	8-729-120-28	TRANSISTOR 2SC1623-L5L6	
Q709	8-729-120-28	TRANSISTOR 2SC1623-L5L6	
Q710	6-551-696-01	TRANSISTOR ISA1235AC1TP-1EF	
Q801	8-729-120-28	TRANSISTOR 2SC1623-L5L6	
Q802	8-729-120-28	TRANSISTOR 2SC1623-L5L6	
Q804	8-729-120-28	TRANSISTOR 2SC1623-L5L6 (EC99)	
		< RESISTOR >	
R601	1-216-817-11	METAL CHIP 470 5% 1/10W	
R603	1-216-801-11	METAL CHIP 22 5% 1/10W	
R604	1-216-845-11	METAL CHIP 100K 5% 1/10W	
R605	1-216-801-11	METAL CHIP 22 5% 1/10W	

MAIN

Ref. No.	Part No.	Description			Remark
R606	1-216-797-11	METAL CHIP	10	5%	1/10W (EC79/EC99)
R607	1-216-797-11	METAL CHIP	10	5%	1/10W (EC79/EC99)
R608	1-216-797-11	METAL CHIP	10	5%	1/10W (EC79/EC99)
R609	1-216-829-11	METAL CHIP	4.7K	5%	1/10W
R610	1-216-829-11	METAL CHIP	4.7K	5%	1/10W
R611	1-216-797-11	METAL CHIP	10	5%	1/10W
R612	1-216-797-11	METAL CHIP	10	5%	1/10W
R613	1-216-833-11	METAL CHIP	10K	5%	1/10W
R614	1-216-833-11	METAL CHIP	10K	5%	1/10W
R615	1-216-797-11	METAL CHIP	10	5%	1/10W
R616	1-216-828-11	METAL CHIP	3.9K	5%	1/10W (EC69)
R616	1-216-833-11	METAL CHIP	10K	5%	1/10W (EC79/EC99)
R617	1-216-833-11	METAL CHIP	10K	5%	1/10W
R618	1-216-833-11	METAL CHIP	10K	5%	1/10W
R619	1-216-828-11	METAL CHIP	3.9K	5%	1/10W (EC69)
R619	1-216-833-11	METAL CHIP	10K	5%	1/10W (EC79/EC99)
R620	1-216-829-11	METAL CHIP	4.7K	5%	1/10W
R621	1-216-829-11	METAL CHIP	4.7K	5%	1/10W
R622	1-216-839-11	METAL CHIP	33K	5%	1/10W
R623	1-216-833-11	METAL CHIP	10K	5%	1/10W
R624	1-216-833-11	METAL CHIP	10K	5%	1/10W
R625	1-216-839-11	METAL CHIP	33K	5%	1/10W
R626	1-216-833-11	METAL CHIP	10K	5%	1/10W
R627	1-216-829-11	METAL CHIP	4.7K	5%	1/10W
R628	1-216-833-11	METAL CHIP	10K	5%	1/10W
R629	1-216-829-11	METAL CHIP	4.7K	5%	1/10W
R630	1-216-841-11	METAL CHIP	47K	5%	1/10W
R631	1-216-797-11	METAL CHIP	10	5%	1/10W (EC79/EC99)
R632	1-216-845-11	METAL CHIP	100K	5%	1/10W (EC79/EC99)
R633	1-216-845-11	METAL CHIP	100K	5%	1/10W (EC79/EC99)
R634	1-249-402-11	CARBON	56	5%	1/4W (EC79: MX/EC99: MX)
R634	1-249-403-11	CARBON	68	5%	1/4W (EC79: AEP, E2, E51, AR/EC99: AEP, E2, E51, AR)
R635	1-249-402-11	CARBON	56	5%	1/4W (EC79: MX/EC99: MX)
R635	1-249-403-11	CARBON	68	5%	1/4W (EC79: AEP, E2, E51, AR/EC99: AEP, E2, E51, AR)
R636	1-249-401-11	CARBON	47	5%	1/4W (EC79: MX/EC99: MX)
R636	1-249-403-11	CARBON	68	5%	1/4W (EC79: AEP, E2, E51, AR/EC99: AEP, E2, E51, AR)
R637	1-216-829-11	METAL CHIP	4.7K	5%	1/10W
R638	1-249-402-11	CARBON	56	5%	1/4W (EC79: MX/EC99: MX)
R638	1-249-403-11	CARBON	68	5%	1/4W (EC69/EC79: AEP, E2, E51, AR/ EC99: AEP, E2, E51, AR)
R639	1-216-845-11	METAL CHIP	100K	5%	1/10W
R640	1-216-845-11	METAL CHIP	100K	5%	1/10W
R641	1-249-402-11	CARBON	56	5%	1/4W (EC79: MX/EC99: MX)
R641	1-249-403-11	CARBON	68	5%	1/4W (EC69/EC79: AEP, E2, E51, AR/ EC99: AEP, E2, E51, AR)
R642	1-249-401-11	CARBON	47	5%	1/4W (EC79: MX/EC99: MX)
R642	1-249-402-11	CARBON	56	5%	1/4W (EC69: MX)
R642	1-249-403-11	CARBON	68	5%	1/4W (EC69: AEP, E2, E51, AR/EC79: AEP, E2, E51, AR/ EC99: AEP, E2, E51, AR)
R643	1-216-833-11	METAL CHIP	10K	5%	1/10W
R644	1-216-821-11	METAL CHIP	1K	5%	1/10W
R645	1-216-825-11	METAL CHIP	2.2K	5%	1/10W
R646	1-216-809-11	METAL CHIP	100	5%	1/10W
R647	1-216-797-11	METAL CHIP	10	5%	1/10W
R648	1-216-841-11	METAL CHIP	47K	5%	1/10W
R649	1-216-825-11	METAL CHIP	2.2K	5%	1/10W
R650	1-216-829-11	METAL CHIP	4.7K	5%	1/10W
R651	1-216-829-11	METAL CHIP	4.7K	5%	1/10W
R652	1-216-809-11	METAL CHIP	100	5%	1/10W
R655	1-216-833-11	METAL CHIP	10K	5%	1/10W
R656	1-216-821-11	METAL CHIP	1K	5%	1/10W
R657	1-216-843-11	METAL CHIP	68K	5%	1/10W
⚠ R658	1-215-890-51	METAL OXIDE	470	5%	2W F
R659	1-216-845-11	METAL CHIP	100K	5%	1/10W (EC99)
R660	1-216-864-11	SHORT CHIP	0		
R661	1-216-864-11	SHORT CHIP	0		
⚠ R662	1-215-890-51	METAL OXIDE	470	5%	2W F
R664	1-216-845-11	METAL CHIP	100K	5%	1/10W
R665	1-216-845-11	METAL CHIP	100K	5%	1/10W
R666	1-216-821-11	METAL CHIP	1K	5%	1/10W
R667	1-216-841-11	METAL CHIP	47K	5%	1/10W
R668	1-216-837-11	METAL CHIP	22K	5%	1/10W
R669	1-216-845-11	METAL CHIP	100K	5%	1/10W
R670	1-216-833-11	METAL CHIP	10K	5%	1/10W
R671	1-216-864-11	SHORT CHIP	0		
R672	1-216-833-11	METAL CHIP	10K	5%	1/10W
R673	1-216-817-11	METAL CHIP	470	5%	1/10W
R674	1-249-401-11	CARBON	47	5%	1/4W
R675	1-249-401-11	CARBON	47	5%	1/4W
R676	1-216-833-11	METAL CHIP	10K	5%	1/10W
R677	1-216-833-11	METAL CHIP	10K	5%	1/10W
R678	1-216-841-11	METAL CHIP	47K	5%	1/10W
R681	1-216-837-11	METAL CHIP	22K	5%	1/10W
R684	1-216-837-11	METAL CHIP	22K	5%	1/10W
R685	1-216-829-11	METAL CHIP	4.7K	5%	1/10W
R686	1-216-842-11	METAL CHIP	56K	5%	1/10W
R687	1-216-837-11	METAL CHIP	22K	5%	1/10W
R688	1-216-817-11	METAL CHIP	470	5%	1/10W
R689	1-216-838-11	METAL CHIP	27K	5%	1/10W
R690	1-216-825-11	METAL CHIP	2.2K	5%	1/10W
R691	1-216-833-11	METAL CHIP	10K	5%	1/10W
R692	1-216-829-11	METAL CHIP	4.7K	5%	1/10W
R693	1-216-821-11	METAL CHIP	1K	5%	1/10W
R696	1-216-833-11	METAL CHIP	10K	5%	1/10W
R697	1-216-821-11	METAL CHIP	1K	5%	1/10W
R700	1-216-829-11	METAL CHIP	4.7K	5%	1/10W
R701	1-216-833-11	METAL CHIP	10K	5%	1/10W
R702	1-216-833-11	METAL CHIP	10K	5%	1/10W
R704	1-216-829-11	METAL CHIP	4.7K	5%	1/10W

MAIN

Ref. No.	Part No.	Description			Remark
R706	1-216-813-11	METAL CHIP	220	5%	1/10W
R707	1-216-813-11	METAL CHIP	220	5%	1/10W
R708	1-216-833-11	METAL CHIP	10K	5%	1/10W
R709	1-216-821-11	METAL CHIP	1K	5%	1/10W
R710	1-216-839-11	METAL CHIP	33K	5%	1/10W (EC99)
R711	1-216-839-11	METAL CHIP	33K	5%	1/10W (EC99)
R712	1-216-817-11	METAL CHIP	470	5%	1/10W (EC99: AEP)
R712	1-216-819-11	METAL CHIP	680	5%	1/10W (EC99: E2, E51, MX, AR)
R713	1-216-845-11	METAL CHIP	100K	5%	1/10W (EC99)
R714	1-216-842-11	METAL CHIP	56K	5%	1/10W (EC99)
R715	1-216-809-11	METAL CHIP	100	5%	1/10W
R716	1-216-821-11	METAL CHIP	1K	5%	1/10W
R717	1-249-403-11	CARBON	68	5%	1/4W
R718	1-249-403-11	CARBON	68	5%	1/4W
R719	1-249-403-11	CARBON	68	5%	1/4W
R720	1-216-837-11	METAL CHIP	22K	5%	1/10W
R721	1-216-829-11	METAL CHIP	4.7K	5%	1/10W (EC99)
R722	1-216-809-11	METAL CHIP	100	5%	1/10W
R723	1-216-789-11	METAL CHIP	2.2	5%	1/10W
R724	1-249-395-11	CARBON	15	5%	1/4W
R725	1-249-395-11	CARBON	15	5%	1/4W
R726	1-249-395-11	CARBON	15	5%	1/4W
R727	1-216-829-11	METAL CHIP	4.7K	5%	1/10W
R728	1-216-829-11	METAL CHIP	4.7K	5%	1/10W
R729	1-216-821-11	METAL CHIP	1K	5%	1/10W
R730	1-216-841-11	METAL CHIP	47K	5%	1/10W (EC99)
R731	1-216-809-11	METAL CHIP	100	5%	1/10W
R732	1-216-809-11	METAL CHIP	100	5%	1/10W
R733	1-216-845-11	METAL CHIP	100K	5%	1/10W (EC99)
R734	1-216-821-11	METAL CHIP	1K	5%	1/10W (EC99)
R735	1-216-864-11	SHORT CHIP	0 (EC99)		
R736	1-216-833-11	METAL CHIP	10K	5%	1/10W (EC99)
R737	1-216-833-11	METAL CHIP	10K	5%	1/10W (EC99)
R738	1-216-821-11	METAL CHIP	1K	5%	1/10W (EC99)
R739	1-216-821-11	METAL CHIP	1K	5%	1/10W (EC99)
R740	1-216-823-11	METAL CHIP	1.5K	5%	1/10W (EC99)
R741	1-216-789-11	METAL CHIP	2.2	5%	1/10W
R742	1-216-789-11	METAL CHIP	2.2	5%	1/10W
R744	1-216-797-11	METAL CHIP	10	5%	1/10W (EC99)
R745	1-216-797-11	METAL CHIP	10	5%	1/10W (EC99)
R746	1-249-402-11	CARBON	56	5%	1/4W (EC99: MX)
R746	1-249-403-11	CARBON	68	5%	1/4W (EC99: AEP, E2, E51, AR)
R747	1-249-402-11	CARBON	56	5%	1/4W (EC99: MX)
R747	1-249-403-11	CARBON	68	5%	1/4W (EC99: AEP, E2, E51, AR)
R748	1-249-401-11	CARBON	47	5%	1/4W (EC99: MX)
R748	1-249-403-11	CARBON	68	5%	1/4W (EC99: AEP, E2, E51, AR)
R749	1-216-829-11	METAL CHIP	4.7K	5%	1/10W
R750	1-216-829-11	METAL CHIP	4.7K	5%	1/10W
R751	1-216-830-11	METAL CHIP	5.6K	5%	1/10W
R752	1-216-830-11	METAL CHIP	5.6K	5%	1/10W
R753	1-216-830-11	METAL CHIP	5.6K	5%	1/10W
R754	1-216-830-11	METAL CHIP	5.6K	5%	1/10W
R755	1-216-829-11	METAL CHIP	4.7K	5%	1/10W (EC99)
R756	1-216-829-11	METAL CHIP	4.7K	5%	1/10W (EC99)
R757	1-216-841-11	METAL CHIP	47K	5%	1/10W (EC99)
R758	1-216-821-11	METAL CHIP	1K	5%	1/10W
R760	1-216-789-11	METAL CHIP	2.2	5%	1/10W
R761	1-216-817-11	METAL CHIP	470	5%	1/10W
R762	1-216-817-11	METAL CHIP	470	5%	1/10W
R763	1-216-827-11	METAL CHIP	3.3K	5%	1/10W
R764	1-216-827-11	METAL CHIP	3.3K	5%	1/10W
R765	1-216-827-11	METAL CHIP	3.3K	5%	1/10W
R766	1-216-833-11	METAL CHIP	10K	5%	1/10W (EC99)
R767	1-216-791-11	METAL CHIP	3.3	5%	1/10W
R768	1-216-833-11	METAL CHIP	10K	5%	1/10W
R770	1-216-845-11	METAL CHIP	100K	5%	1/10W
R781	1-216-845-11	METAL CHIP	100K	5%	1/10W
R782	1-216-833-11	METAL CHIP	10K	5%	1/10W
R787	1-216-835-11	METAL CHIP	15K	5%	1/10W
R788	1-216-835-11	METAL CHIP	15K	5%	1/10W
R791	1-216-845-11	METAL CHIP	100K	5%	1/10W
R792	1-216-849-11	METAL CHIP	220K	5%	1/10W
R793	1-216-827-11	METAL CHIP	3.3K	5%	1/10W
R794	1-216-833-11	METAL CHIP	10K	5%	1/10W
R795	1-216-848-11	METAL CHIP	180K	5%	1/10W
R796	1-216-851-11	METAL CHIP	330K	5%	1/10W
R797	1-216-841-11	METAL CHIP	47K	5%	1/10W
R798	1-216-829-11	METAL CHIP	4.7K	5%	1/10W
R799	1-216-818-11	METAL CHIP	560	5%	1/10W
R801	1-216-809-11	METAL CHIP	100	5%	1/10W
R802	1-216-801-11	METAL CHIP	22	5%	1/10W
R803	1-216-825-11	METAL CHIP	2.2K	5%	1/10W
R804	1-216-801-11	METAL CHIP	22	5%	1/10W
R805	1-216-853-11	METAL CHIP	470K	5%	1/10W
R806	1-216-841-11	METAL CHIP	47K	5%	1/10W
R807	1-216-837-11	METAL CHIP	22K	5%	1/10W
R808	1-216-801-11	METAL CHIP	22	5%	1/10W
R809	1-216-809-11	METAL CHIP	100	5%	1/10W
R810	1-216-829-11	METAL CHIP	4.7K	5%	1/10W
R811	1-216-845-11	METAL CHIP	100K	5%	1/10W
R812	1-216-841-11	METAL CHIP	47K	5%	1/10W
R813	1-216-853-11	METAL CHIP	470K	5%	1/10W
R814	1-216-837-11	METAL CHIP	22K	5%	1/10W
R815	1-216-833-11	METAL CHIP	10K	5%	1/10W
R816	1-216-821-11	METAL CHIP	1K	5%	1/10W
R817	1-216-841-11	METAL CHIP	47K	5%	1/10W
R818	1-216-833-11	METAL CHIP	10K	5%	1/10W

Ref. No.	Part No.	Description			Remark
R819	1-216-839-11	METAL CHIP	33K	5%	1/10W
R820	1-216-829-11	METAL CHIP	4.7K	5%	1/10W
R821	1-216-829-11	METAL CHIP	4.7K	5%	1/10W
R822	1-216-809-11	METAL CHIP	100	5%	1/10W
R823	1-216-833-11	METAL CHIP	10K	5%	1/10W
R824	1-216-817-11	METAL CHIP	470	5%	1/10W
R825	1-216-829-11	METAL CHIP	4.7K	5%	1/10W
R826	1-216-821-11	METAL CHIP	1K	5%	1/10W
R827	1-216-845-11	METAL CHIP	100K	5%	1/10W
R829	1-216-829-11	METAL CHIP	4.7K	5%	1/10W
R830	1-216-827-11	METAL CHIP	3.3K	5%	1/10W
R831	1-216-825-11	METAL CHIP	2.2K	5%	1/10W
R832	1-216-857-11	METAL CHIP	1M	5%	1/10W
R836	1-218-867-11	METAL CHIP	6.8K	0.5%	1/10W
R837	1-216-845-11	METAL CHIP	100K	5%	1/10W
R838	1-216-837-11	METAL CHIP	22K	5%	1/10W
R839	1-216-797-11	METAL CHIP	10	5%	1/10W
R840	1-216-864-11	SHORT CHIP	0		
R841	1-216-833-11	METAL CHIP	10K	5%	1/10W
R842	1-216-864-11	SHORT CHIP	0		
R843	1-216-845-11	METAL CHIP	100K	5%	1/10W
R844	1-216-825-11	METAL CHIP	2.2K	5%	1/10W
R845	1-216-864-11	SHORT CHIP	0		
R846	1-216-797-11	METAL CHIP	10	5%	1/10W
R847	1-216-864-11	SHORT CHIP	0		
R860	1-216-833-11	METAL CHIP	10K	5%	1/10W (EC99)
R861	1-216-833-11	METAL CHIP	10K	5%	1/10W (EC99)
R862	1-216-833-11	METAL CHIP	10K	5%	1/10W (EC99)
R863	1-216-833-11	METAL CHIP	10K	5%	1/10W (EC99)
R864	1-216-829-11	METAL CHIP	4.7K	5%	1/10W (EC99)
R865	1-216-841-11	METAL CHIP	47K	5%	1/10W (EC99)
R866	1-216-833-11	METAL CHIP	10K	5%	1/10W (EC99)
R867	1-216-827-11	METAL CHIP	3.3K	5%	1/10W (EC99)
R868	1-216-823-11	METAL CHIP	1.5K	5%	1/10W (EC99)
R869	1-216-833-11	METAL CHIP	10K	5%	1/10W (EC99)
R870	1-216-833-11	METAL CHIP	10K	5%	1/10W (EC99)
R875	1-216-864-11	SHORT CHIP	0 (EC69/EC79)		
R876	1-216-805-11	METAL CHIP	47	5%	1/10W
R878	1-216-864-11	SHORT CHIP	0 (EC99)		
R880	1-216-821-11	METAL CHIP	1K	5%	1/10W (EC99)
R881	1-216-825-11	METAL CHIP	2.2K	5%	1/10W (EC99)
R882	1-216-821-11	METAL CHIP	1K	5%	1/10W (EC99)
R883	1-216-842-11	METAL CHIP	56K	5%	1/10W (EC79/EC99)
R883	1-216-844-11	METAL CHIP	82K	5%	1/10W (EC69)

Ref. No.	Part No.	Description			Remark
		< RELAY >			
RY601	1-755-307-21	RELAY (EC79/EC99)			
RY602	1-755-307-21	RELAY			
RY701	1-755-307-21	RELAY (EC99)			
		< TRANSFORMER >			
T801	1-433-741-11	TRANSFORMER, IF			
		< TERMINAL >			
TB601	1-780-686-11	PUSH TERMINAL BOARD (ANTE) 4P (SPEAKER HIGH FREQ. IMPEDANCE: USE 8Ω)			(EC79/EC99)
TB602	1-536-708-81	TERMINAL BOARD, PUSH (4P) (SPEAKER IMPEDANCE: USE 6Ω) (EC69)			
TB602	1-536-708-81	TERMINAL BOARD, PUSH (4P) (SPEAKER LOW FREQ. IMPEDANCE: USE 8Ω)			(EC79/EC99)
TB603	1-780-473-21	TERMINAL BOARD (SPEAKER) 1P (SUBWOOFER IMPEDANCE: USE 4Ω) (EC99)			
		< VIBRATOR >			
X801	1-813-917-11	VIBRATOR, CRYSTAL (75kHz)			
**********					
	A-1599-417-A	PANEL BOARD, COMPLETE (EC99: AEP)			
	A-1599-439-A	PANEL BOARD, COMPLETE (EC99: E51, MX, AR)			
	A-1599-446-A	PANEL BOARD, COMPLETE (EC99: E2)			
	A-1599-451-A	PANEL BOARD, COMPLETE (EC79: AEP)			
	A-1599-458-A	PANEL BOARD, COMPLETE (EC79: E51, MX, AR)			
	A-1599-462-A	PANEL BOARD, COMPLETE (EC79: E2)			
	A-1599-467-A	PANEL BOARD, COMPLETE (EC69: AEP)			
	A-1599-474-A	PANEL BOARD, COMPLETE (EC69: E51, MX, AR)			
	A-1599-478-A	PANEL BOARD, COMPLETE (EC69: E2)			
		**********			
	2-649-178-01	PLATE, LIGHT GUIDE			
	2-649-179-01	SHEET (LCD)			
	2-665-175-01	SHEET (REFLECTOR)			
		< CAPACITOR >			
C301	1-164-156-11	CERAMIC CHIP	0.1uF		25V
C302	1-104-658-91	ELECT	100uF	20%	10V
C303	1-126-964-11	ELECT	10uF	20%	50V
C304	1-100-597-91	CERAMIC CHIP	0.1uF	10%	25V
C305	1-126-964-11	ELECT	10uF	20%	50V
C306	1-104-655-91	ELECT	470uF	20%	6.3V
C308	1-100-566-91	CERAMIC CHIP	0.1uF	10%	25V
C309	1-126-965-91	ELECT	22uF	20%	50V
C310	1-164-156-11	CERAMIC CHIP	0.1uF		25V
C311	1-164-156-11	CERAMIC CHIP	0.1uF		25V
C312	1-164-156-11	CERAMIC CHIP	0.1uF		25V
C313	1-115-467-11	CERAMIC CHIP	0.22uF	10%	10V
C314	1-165-176-11	CERAMIC CHIP	0.047uF	10%	16V
C315	1-165-176-11	CERAMIC CHIP	0.047uF	10%	16V
C316	1-165-176-11	CERAMIC CHIP	0.047uF	10%	16V
C317	1-162-964-11	CERAMIC CHIP	0.001uF	10%	50V
C319	1-162-918-11	CERAMIC CHIP	18PF	5%	50V
C320	1-162-919-11	CERAMIC CHIP	22PF	5%	50V
C321	1-164-156-11	CERAMIC CHIP	0.1uF		25V
C328	1-165-176-11	CERAMIC CHIP	0.047uF	10%	16V
C330	1-164-156-11	CERAMIC CHIP	0.1uF		25V
C332	1-162-970-11	CERAMIC CHIP	0.01uF	10%	25V

PANEL

Ref. No.	Part No.	Description			Remark
C336	1-164-156-11	CERAMIC CHIP	0.1uF		25V
C338	1-162-964-11	CERAMIC CHIP	0.001uF	10%	50V
C340	1-164-156-11	CERAMIC CHIP	0.1uF		25V
C341	1-164-156-11	CERAMIC CHIP	0.1uF		25V
C342	1-162-964-11	CERAMIC CHIP	0.001uF	10%	50V
C343	1-126-965-91	ELECT	22uF	20%	50V
C344	1-165-176-11	CERAMIC CHIP	0.047uF	10%	16V
C345	1-165-176-11	CERAMIC CHIP	0.047uF	10%	16V
C346	1-165-176-11	CERAMIC CHIP	0.047uF	10%	16V
C354	1-162-968-11	CERAMIC CHIP	0.0047uF	10%	50V
C355	1-162-968-11	CERAMIC CHIP	0.0047uF	10%	50V
C359	1-162-927-11	CERAMIC CHIP	100PF	5%	50V
C360	1-162-927-11	CERAMIC CHIP	100PF	5%	50V
		< CONNECTOR >			
CN302	1-784-735-11	CONNECTOR, FFC 13P			
CN303	1-824-027-21	HOLDER, CABLE 3P			
CN306	1-784-751-11	CONNECTOR, FFC 29P			
		< DIODE >			
D301	6-501-722-01	DIODE MAZ8043GMLS0			
D302	6-501-817-01	DIODE MA2J1110GLS0			
D303	6-500-334-01	DIODE MC2836-T112-1			
D304	6-501-817-01	DIODE MA2J1110GLS0			
D305	6-501-817-01	DIODE MA2J1110GLS0			
D306	6-501-479-01	LED 1L0341Y23E0CA602 (STANDBY) (EC69)			
D306	6-502-465-01	LED SELT2WA10C-2LF62 (STANDBY) (EC79/EC99)			
		< IC >			
IC301	A-1711-702-A	IC MB90F830PF-GE1 (for SERVICE)			
IC302	6-600-349-21	IC NJL23H400A			
		< LIQUID CRYSTAL DISPLAY >			
LCD301	1-802-840-11	DISPLAY PANEL, LIQUID CRYSTAL (EC69)			
LCD301	1-802-841-11	DISPLAY PANEL, LIQUID CRYSTAL (EC79/EC99)			
		< TRANSISTOR >			
Q301	8-729-120-28	TRANSISTOR	2SC1623-L5L6		
Q302	8-729-037-13	TRANSISTOR	KTA1271Y		
Q303	8-729-120-28	TRANSISTOR	2SC1623-L5L6		
Q304	8-729-120-28	TRANSISTOR	2SC1623-L5L6		
Q305	8-729-120-28	TRANSISTOR	2SC1623-L5L6		
Q306	8-729-038-28	TRANSISTOR	RT1N441C-TP-1		
Q307	6-551-696-01	TRANSISTOR	ISA1235AC1TP-1EF		
Q308	8-729-038-28	TRANSISTOR	RT1N441C-TP-1		
Q309	8-729-040-76	TRANSISTOR	KTA1273-Y-AT		
Q310	8-729-120-28	TRANSISTOR	2SC1623-L5L6		
Q311	6-552-137-01	TRANSISTOR	2SA2166-T112-1W		
Q312	6-552-137-01	TRANSISTOR	2SA2166-T112-1W		
Q313	6-552-137-01	TRANSISTOR	2SA2166-T112-1W		
Q314	6-552-137-01	TRANSISTOR	2SA2166-T112-1W		
Q315	6-552-138-01	TRANSISTOR	2SC6053-T112-1F		
Q316	6-552-138-01	TRANSISTOR	2SC6053-T112-1F		
Q317	6-552-138-01	TRANSISTOR	2SC6053-T112-1F		
Q318	6-552-138-01	TRANSISTOR	2SC6053-T112-1F		
		< RESISTOR >			
R303	1-216-809-11	METAL CHIP	100	5%	1/10W
R304	1-216-809-11	METAL CHIP	100	5%	1/10W
R305	1-216-809-11	METAL CHIP	100	5%	1/10W
R306	1-216-809-11	METAL CHIP	100	5%	1/10W
R307	1-216-809-11	METAL CHIP	100	5%	1/10W
R308	1-216-809-11	METAL CHIP	100	5%	1/10W
R309	1-216-809-11	METAL CHIP	100	5%	1/10W
R310	1-216-809-11	METAL CHIP	100	5%	1/10W
R311	1-216-809-11	METAL CHIP	100	5%	1/10W
R312	1-216-809-11	METAL CHIP	100	5%	1/10W
R313	1-216-809-11	METAL CHIP	100	5%	1/10W
R314	1-216-809-11	METAL CHIP	100	5%	1/10W
R315	1-216-809-11	METAL CHIP	100	5%	1/10W
R316	1-216-809-11	METAL CHIP	100	5%	1/10W
R317	1-216-809-11	METAL CHIP	100	5%	1/10W
R318	1-216-809-11	METAL CHIP	100	5%	1/10W
R319	1-216-809-11	METAL CHIP	100	5%	1/10W
R320	1-216-809-11	METAL CHIP	100	5%	1/10W
R321	1-216-809-11	METAL CHIP	100	5%	1/10W
R322	1-216-809-11	METAL CHIP	100	5%	1/10W
R323	1-216-809-11	METAL CHIP	100	5%	1/10W
R324	1-216-809-11	METAL CHIP	100	5%	1/10W
R325	1-216-797-11	METAL CHIP	10	5%	1/10W
R326	1-216-809-11	METAL CHIP	100	5%	1/10W
R327	1-216-809-11	METAL CHIP	100	5%	1/10W
R328	1-216-833-11	METAL CHIP	10K	5%	1/10W
R329	1-216-825-11	METAL CHIP	2.2K	5%	1/10W
R330	1-216-819-11	METAL CHIP	680	5%	1/10W
R331	1-216-845-11	METAL CHIP	100K	5%	1/10W
R332	1-216-833-11	METAL CHIP	10K	5%	1/10W
R333	1-216-845-11	METAL CHIP	100K	5%	1/10W
R334	1-216-827-11	METAL CHIP	3.3K	5%	1/10W
R335	1-216-837-11	METAL CHIP	22K	5%	1/10W
R336	1-216-833-11	METAL CHIP	10K	5%	1/10W
R337	1-216-813-11	METAL CHIP	220	5%	1/10W
R338	1-216-789-11	METAL CHIP	2.2	5%	1/10W
R339	1-216-789-11	METAL CHIP	2.2	5%	1/10W
R340	1-216-829-11	METAL CHIP	4.7K	5%	1/10W
R341	1-216-839-11	METAL CHIP	33K	5%	1/10W
R342	1-216-849-11	METAL CHIP	220K	5%	1/10W
R343	1-216-853-11	METAL CHIP	470K	5%	1/10W
R344	1-216-826-11	METAL CHIP	2.7K	5%	1/10W
R345	1-216-829-11	METAL CHIP	4.7K	5%	1/10W
R346	1-216-841-11	METAL CHIP	47K	5%	1/10W
R347	1-216-817-11	METAL CHIP	470	5%	1/10W
R348	1-216-841-11	METAL CHIP	47K	5%	1/10W
R349	1-216-817-11	METAL CHIP	470	5%	1/10W
R350	1-216-841-11	METAL CHIP	47K	5%	1/10W
R351	1-216-817-11	METAL CHIP	470	5%	1/10W
R352	1-216-841-11	METAL CHIP	47K	5%	1/10W
R353	1-216-817-11	METAL CHIP	470	5%	1/10W
R354	1-216-841-11	METAL CHIP	47K	5%	1/10W
R355	1-216-821-11	METAL CHIP	1K	5%	1/10W
R356	1-216-821-11	METAL CHIP	1K	5%	1/10W
R357	1-216-841-11	METAL CHIP	47K	5%	1/10W
R358	1-216-841-11	METAL CHIP	47K	5%	1/10W
R359	1-216-821-11	METAL CHIP	1K	5%	1/10W
R360	1-216-821-11	METAL CHIP	1K	5%	1/10W
R361	1-216-841-11	METAL CHIP	47K	5%	1/10W
R362	1-216-837-11	METAL CHIP	22K	5%	1/10W
R363	1-216-837-11	METAL CHIP	22K	5%	1/10W
R364	1-216-837-11	METAL CHIP	22K	5%	1/10W

PANEL **PT-SINGLE** **PT-SWITCH**

Ref. No.	Part No.	Description			Remark
R365	1-216-837-11	METAL CHIP	22K	5%	1/10W
R366	1-216-833-11	METAL CHIP	10K	5%	1/10W
R367	1-216-837-11	METAL CHIP	22K	5%	1/10W
R368	1-216-833-11	METAL CHIP	10K	5%	1/10W
R369	1-216-821-11	METAL CHIP	1K	5%	1/10W
R370	1-216-821-11	METAL CHIP	1K	5%	1/10W
R371	1-216-821-11	METAL CHIP	1K	5%	1/10W
R372	1-216-821-11	METAL CHIP	1K	5%	1/10W
R373	1-216-864-11	SHORT CHIP	0		
R374	1-216-821-11	METAL CHIP	1K	5%	1/10W
R375	1-216-864-11	SHORT CHIP	0		
R376	1-216-833-11	METAL CHIP	10K	5%	1/10W
R377	1-216-833-11	METAL CHIP	10K	5%	1/10W
R378	1-216-839-11	METAL CHIP	33K	5%	1/10W
R379	1-216-843-11	METAL CHIP	68K	5%	1/10W
R380	1-216-817-11	METAL CHIP	470	5%	1/10W
R381	1-216-833-11	METAL CHIP	10K	5%	1/10W
R382	1-216-833-11	METAL CHIP	10K	5%	1/10W
R383	1-216-833-11	METAL CHIP	10K	5%	1/10W
R384	1-216-833-11	METAL CHIP	10K	5%	1/10W
R385	1-216-821-11	METAL CHIP	1K	5%	1/10W
R386	1-216-821-11	METAL CHIP	1K	5%	1/10W
R387	1-216-821-11	METAL CHIP	1K	5%	1/10W
R389	1-216-841-11	METAL CHIP	47K	5%	1/10W (EC69)
R389	1-216-845-11	METAL CHIP	100K	5%	1/10W (EC79)
R390	1-216-833-11	METAL CHIP	10K	5%	1/10W
R391	1-216-821-11	METAL CHIP	1K	5%	1/10W (EC69: AEP/EC79: AEP/EC99: AEP)
R391	1-216-841-11	METAL CHIP	47K	5%	1/10W (EC69: E2/EC79: E2/EC99: E2)
R391	1-216-845-11	METAL CHIP	100K	5%	1/10W (EC69: E51, MX, AR/EC79: E51, MX, AR/ EC99: E51, MX, AR)
R392	1-216-833-11	METAL CHIP	10K	5%	1/10W (EC69: E2, E51, MX, AR/EC79: E2, E51, MX, AR/ EC99: E2, E51, MX, AR)
R396	1-216-851-11	METAL CHIP	330K	5%	1/10W
R400	1-216-821-11	METAL CHIP	1K	5%	1/10W
R401	1-216-821-11	METAL CHIP	1K	5%	1/10W
R402	1-216-845-11	METAL CHIP	100K	5%	1/10W
R412	1-216-822-11	METAL CHIP	1.2K	5%	1/10W
R413	1-216-823-11	METAL CHIP	1.5K	5%	1/10W
R414	1-216-825-11	METAL CHIP	2.2K	5%	1/10W
R415	1-216-826-11	METAL CHIP	2.7K	5%	1/10W
R416	1-216-828-11	METAL CHIP	3.9K	5%	1/10W
R417	1-218-867-11	METAL CHIP	6.8K	0.5%	1/10W
R418	1-216-835-11	METAL CHIP	15K	5%	1/10W (EC99)
R419	1-216-838-11	METAL CHIP	27K	5%	1/10W
R420	1-216-845-11	METAL CHIP	100K	5%	1/10W
R421	1-216-833-11	METAL CHIP	10K	5%	1/10W
R422	1-216-829-11	METAL CHIP	4.7K	5%	1/10W
R426	1-216-845-11	METAL CHIP	100K	5%	1/10W
R428	1-216-841-11	METAL CHIP	47K	5%	1/10W
R433	1-216-809-11	METAL CHIP	100	5%	1/10W
R434	1-216-809-11	METAL CHIP	100	5%	1/10W
R435	1-216-809-11	METAL CHIP	100	5%	1/10W
R436	1-216-809-11	METAL CHIP	100	5%	1/10W
R447	1-216-829-11	METAL CHIP	4.7K	5%	1/10W
R449	1-216-805-11	METAL CHIP	47	5%	1/10W

Ref. No.	Part No.	Description			Remark
R450	1-216-822-11	METAL CHIP	1.2K	5%	1/10W
R451	1-216-829-11	METAL CHIP	4.7K	5%	1/10W
R452	1-216-839-11	METAL CHIP	33K	5%	1/10W
		< ROTARY ENCODER >			
S301	1-786-417-11	ENCODER, ROTARY (VOLUME)			
		< SWITCH >			
SW301	1-771-410-21	SWITCH, TACTILE (I/⏻)			
SW312	1-771-410-21	SWITCH, TACTILE (DISC SKIP/EX-CHANGE)			
SW313	1-771-410-21	SWITCH, TACTILE (– TUNING, ⏮, ◀◀)			
SW314	1-771-410-21	SWITCH, TACTILE (▶II)			
SW315	1-771-410-21	SWITCH, TACTILE (FOLDER –)			
SW316	1-771-410-21	SWITCH, TACTILE (EQ)			
SW317	1-771-410-21	SWITCH, TACTILE (FUNCTION)			
SW318	1-771-410-21	SWITCH, TACTILE (SUBWOOFER ON/OFF)			(EC99)
SW319	1-771-410-21	SWITCH, TACTILE (DISPLAY)			
		< VIBRATOR >			
X301	1-814-067-11	OSCILLATOR, CRYSTAL (32.768kHz)			
X302	1-813-548-31	VIBRATOR, CERAMIC (6MHz)			

****

PT-SINGLE BOARD (EC69: AEP, MX, AR/ EC79: AEP, MX, AR/EC99: AEP, MX, AR)
****

Ref. No.	Part No.	Description			Remark
		< CAPACITOR >			
C001	1-165-621-91	CERAMIC CHIP	0.1uF		50V
		< CONNECTOR >			
* CN001	1-793-660-11	PIN, CONNECTOR (PC BOARD) 3P			
CN002	1-820-973-11	HOLDER, CABLE 10P (EC99: AEP, MX, AR)			
CN003	1-819-972-11	HOLDER, CABLE 8P (EC69: AEP, MX, AR/EC79: AEP, MX, AR)			
		< DIODE >			
D001	6-500-334-01	DIODE MC2836-T112-1			
D002	6-500-335-01	DIODE MC2838-T112-1			
D003	6-500-335-01	DIODE MC2838-T112-1			
		< TRANSFORMER >			
⚠ PT002	1-443-912-11	TRANSFORMER, POWER (EC69: AEP/EC79: AEP/EC99: AEP)			
⚠ PT003	1-445-105-11	TRANSFORMER, POWER (EC69: MX, AR/EC79: MX, AR/EC99: MX, AR)			
		< RELAY >			
⚠ RY001	1-755-334-11	RELAY, AC POWER			

****

PT-SWITCH BOARD
(EC69: E2, E51/EC79: E2, E51/EC99: E2, E51)
****

Ref. No.	Part No.	Description			Remark
		< CAPACITOR >			
C051	1-165-621-91	CERAMIC CHIP	0.1uF		50V

PT-SWITCH REG USB

Ref. No.	Part No.	Description				Remark
		< CONNECTOR >				
* CN051	1-793-660-11	PIN, CONNECTOR (PC BOARD) 3P				
CN052	1-820-973-11	HOLDER, CABLE 10P (EC99: E2, E51)				
CN053	1-819-972-11	HOLDER, CABLE 8P				(EC69: E2, E51/EC79: E2, E51)
		< DIODE >				
D051	6-500-334-01	DIODE MC2836-T112-1				
D052	6-500-335-01	DIODE MC2838-T112-1				
D053	6-500-335-01	DIODE MC2838-T112-1				
		< TRANSFORMER >				
⚠ PT051	1-445-105-11	TRANSFORMER, POWER				
		< RELAY >				
⚠ RY052	1-755-496-11	RELAY				
		< SWITCH >				
⚠ S051	1-786-408-11	SELECTOR, VOLTAGE (SWS-2301)				(VOLTAGE SELECTOR)

****

		REG BOARD				
		*********				
		< CAPACITOR >				
C698	1-100-566-91	CERAMIC CHIP	0.1uF	10%	25V	
		< IC >				
IC601	6-713-032-01	IC KIA7809API-U/PF				
		< CABLE HOLDER >				
W610	1-824-027-21	HOLDER, CABLE 3P				

****

	A-1599-426-A	USB BOARD, COMPLETE				
		**********				
		< CAPACITOR >				
C101	1-128-995-21	ELECT CHIP	100uF	20%	10V	
C108	1-164-360-11	CERAMIC CHIP	0.1uF		16V	
C109	1-164-360-11	CERAMIC CHIP	0.1uF		16V	
C110	1-164-360-11	CERAMIC CHIP	0.1uF		16V	
C111	1-164-360-11	CERAMIC CHIP	0.1uF		16V	
C112	1-162-964-11	CERAMIC CHIP	0.001uF	10%	50V	
C113	1-162-919-11	CERAMIC CHIP	22PF	5%	50V	
C114	1-162-919-11	CERAMIC CHIP	22PF	5%	50V	
C115	1-128-995-21	ELECT CHIP	100uF	20%	10V	
C116	1-164-360-11	CERAMIC CHIP	0.1uF		16V	
C117	1-164-360-11	CERAMIC CHIP	0.1uF		16V	
C118	1-164-360-11	CERAMIC CHIP	0.1uF		16V	
C119	1-162-964-11	CERAMIC CHIP	0.001uF	10%	50V	
C120	1-162-964-11	CERAMIC CHIP	0.001uF	10%	50V	
C123	1-165-908-11	CERAMIC CHIP	1uF	10%	10V	
C141	1-164-360-11	CERAMIC CHIP	0.1uF		16V	
C143	1-125-837-91	CERAMIC CHIP	1uF	10%	6.3V	
C144	1-165-989-11	CERAMIC CHIP	10uF	10%	6.3V	
C147	1-164-360-11	CERAMIC CHIP	0.1uF		16V	

Ref. No.	Part No.	Description				Remark
		< CONNECTOR >				
CN104	1-794-548-21	CONNECTOR, USB (A) (USB)				
		< DIODE >				
D106	8-719-058-24	DIODE RB501V-40TE-17				
D107	8-719-058-24	DIODE RB501V-40TE-17				
D108	6-501-716-01	DIODE MAZ8036GLLS0				
D109	6-501-716-01	DIODE MAZ8036GLLS0				
D110	8-719-062-51	DIODE 1PS226-115				
D113	8-719-062-51	DIODE 1PS226-115				
		< JUMPER RESISTOR/FERRITE BEAD >				
FB101	1-216-295-91	SHORT CHIP	0			
FB102	1-216-295-91	SHORT CHIP	0			
FB103	1-469-152-11	FERRITE, EMI (SMD) (2012)				
		< IC >				
IC101	6-713-387-01	IC BU81438JKV-E2				
		< COIL >				
L102	1-457-223-11	COMMON MODE CHOKE COIL				
		< RESISTOR >				
R101	1-216-809-11	METAL CHIP	100	5%	1/10W	
R102	1-216-809-11	METAL CHIP	100	5%	1/10W	
R103	1-216-809-11	METAL CHIP	100	5%	1/10W	
R104	1-216-809-11	METAL CHIP	100	5%	1/10W	
R108	1-216-845-11	METAL CHIP	100K	5%	1/10W	
R113	1-216-864-11	SHORT CHIP	0			
R123	1-218-873-11	METAL CHIP	12K	0.5%	1/10W	
R124	1-216-857-11	METAL CHIP	1M	5%	1/10W	
R125	1-216-809-11	METAL CHIP	100	5%	1/10W	
R126	1-216-809-11	METAL CHIP	100	5%	1/10W	
R127	1-216-809-11	METAL CHIP	100	5%	1/10W	
R128	1-216-864-11	SHORT CHIP	0			
R129	1-216-864-11	SHORT CHIP	0			
R146	1-216-864-11	SHORT CHIP	0			
R147	1-216-864-11	SHORT CHIP	0			
R151	1-216-864-11	SHORT CHIP	0			
		< VIBRATOR >				
X101	1-767-408-21	VIBRATOR, CRYSTAL (16.9344MHz)				

****

Ref. No.	Part No.	Description	Remark
		MISCELLANEOUS	
		**********	
58	1-833-054-21	CABLE, FLEXIBLE FLAT (9 CORE)	
62	1-832-917-21	CABLE, FLEXIBLE FLAT (29 CORE)	
64	1-457-413-11	CORE, FERRITE	
65	1-836-764-21	CABLE, FLEXIBLE FLAT (13 CORE)	
101	1-832-838-21	CABLE, FLEXIBLE FLAT (13 CORE)	
⚠ 105	1-829-387-11	CORD, POWER (AR)	
⚠ 105	1-834-965-22	CORD, POWER (MX)	
⚠ 105	1-834-966-41	POWER-SUPPLY CORD (AEP, E2, E51)	
106	1-834-181-21	CABLE, FLEXIBLE FLAT (21 CORE)	
152	1-835-335-21	CABLE, FLEXIBLE FLAT (7 CORE) (EC99)	
153	1-831-744-21	CABLE, FLEXIBLE FLAT (5 CORE) (EC69/EC79)	
153	1-836-765-21	CABLE, FLEXIBLE FLAT (5 CORE) (EC99)	
201	1-797-193-62	MECHANICAL, CD (DLM3A)	
⚠ 206	A-4735-357-A	BASE ASSY, OP (KSM-213D)	
207	1-832-404-21	CABLE, FLEXIBLE FLAT (16 CORE)	
M601	1-787-319-12	FAN, DC (EC69)	
M601	1-787-344-11	FAN, DC (EC79/EC99)	
⚠ PT004	1-445-117-11	TRANSFORMER, POWER (EC69: AEP)	
⚠ PT004	1-445-338-11	TRANSFORMER, POWER (EC69: MX)	
⚠ PT004	1-445-346-11	TRANSFORMER, POWER (EC69: AR)	
⚠ PT005	1-445-567-11	TRANSFORMER, POWER (EC99: AEP)	
⚠ PT005	1-445-568-11	TRANSFORMER, POWER (EC79: AR)	
⚠ PT005	1-445-570-11	TRANSFORMER, POWER (EC99: AR)	
⚠ PT005	1-445-571-11	TRANSFORMER, POWER (EC79: MX)	
⚠ PT005	1-445-575-11	TRANSFORMER, POWER (EC99: MX)	
⚠ PT005	1-445-624-11	TRANSFORMER, POWER (EC79: AEP)	
⚠ PT054	1-445-346-11	TRANSFORMER, POWER (EC69: E2, E51)	
⚠ PT055	1-445-568-11	TRANSFORMER, POWER (EC79: E2, E51)	
⚠ PT055	1-445-570-11	TRANSFORMER, POWER (EC99: E2, E51)	
S201	1-771-853-11	SWITCH, DETECTION (LIMIT)	
**********			
		ACCESSORY	
		**********	
⚠	1-569-008-33	ADAPTOR, CONVERSION (E2, E51)	

REVISION HISTORY

Checking the version allows you to jump to the revised page.
Also, clicking the version at the top of the revised page allows you to jump to the next revised page.

Ver.	Date	Description of Revision
1.0	2009.03	New