Service Manual

TOP NEXT

ORDER NO. MD0102038C1

A6

Service Manual

CD Stereo System

COMPACT disc DIGITAL AUDIO

- SA-AK66

Colour

(S)... Silver Type

Area

(P)... U.S.A.

(PC)... Canada

TAPE SECTION :

SG-2W MECHANISM SERIES

CD SECTION :

RAE0152Z-3 TRAVERSE DECK SERIES

Specifications

· AMPLIFIER SECTION	
Power output	
THD 10% Total harmonic distortion	
(Front 1 kHz)	70 W per channel (6Ω)
(Center 1 kHz)	70 W per channel (8Ω)
(Surround 1 kHz)	35 W per channel (8Ω)
Total output in stereo mode	140 W
Total output in Dolby Pro Logic mode	280 W
FTC Power output	
THD 10% Total harmonic distortion	
(Front 70-16 kHz)	60 W per channel (6Ω)
(Center 70-16 kHz)	70 W per channel (8Ω)
(Surround 70-16 kHz)	35 W per channel (8Ω)
Total output in stereo mode	120 W
Total output in Dolby Pro Logic mode	260 W
Input sensitivity	
AUX	250 mV
Input Impedance	
AUX	13 kΩ
· FM TUNER SECTION	
Frequency range	87.9 - 107.9 MHz (200 kHz steps)
	87.5 - 108.0 MHz (100 kHz steps)
Sensitivity	2.5µV (IHF)
S/N 26 dB	2.2µV
Antenna terminal(s)	75Ω (unbalanced)
· AM TUNER SECTION	
Frequency range	520 - 1710 kHz (10 kHz steps)
Sensitivity	
S/N 20 dB (at 1000 kHz)	560µV/m
· CASSETTE DECK SECTION	
Track system	4 track, 2 channel
Heads	
Record/playback	Solid permalloy head
Erasure	Double gap ferrite head
Motor	DC servo motor
Recording system	AC bias 100 kHz
Erasing system	AC erase 100 kHz

SCHEMA 99

http://servis-manual.com/

19 Troubleshooting Guide

TOP PREVIOUS NEXT

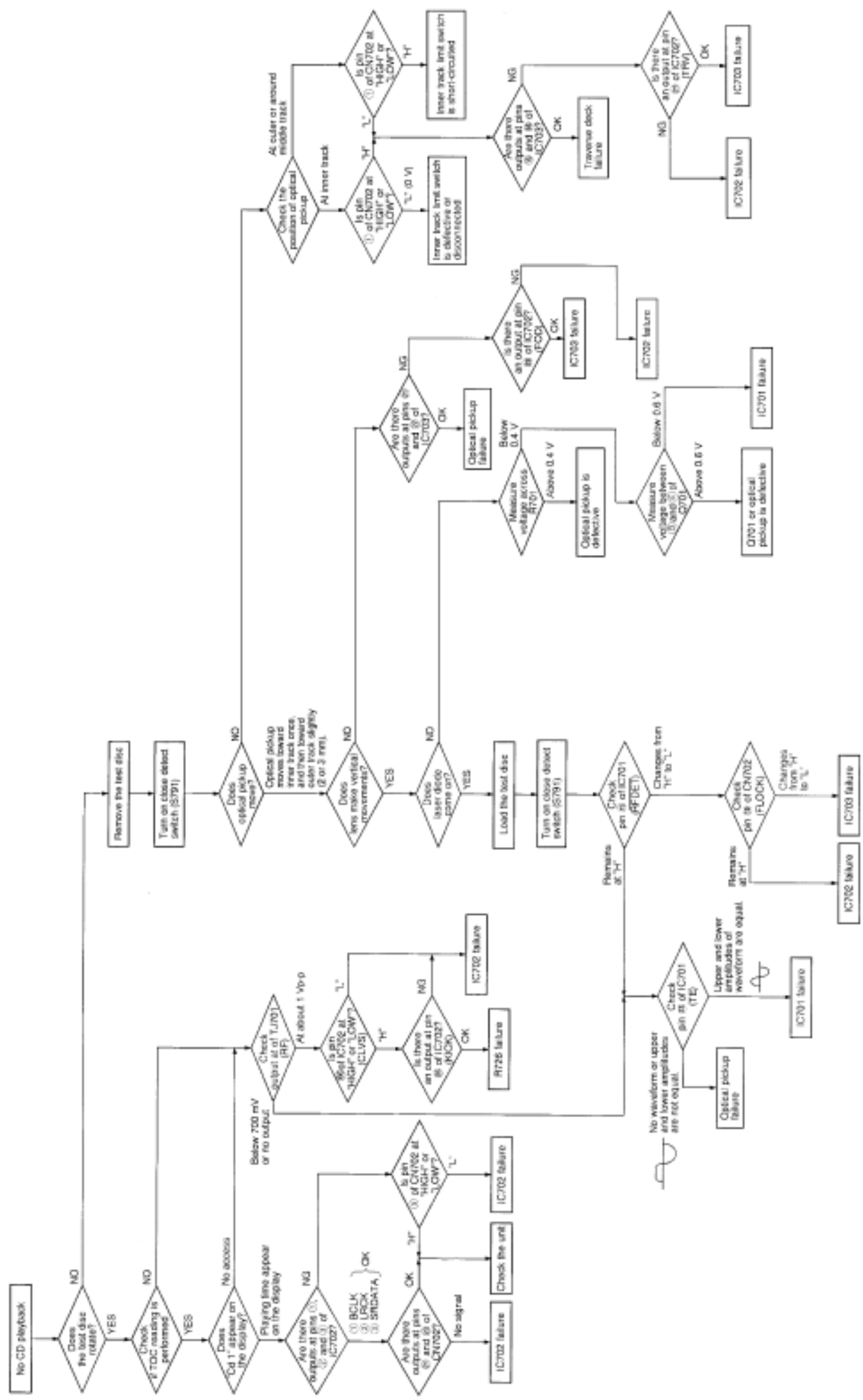

TOP PREVIOUS NEXT

SCHEMATIC DIAGRAM -1

—— : +B SIGNAL LINE – – : +B SIGNAL LINE : CD SIGNAL LINE

A CD SERVO CIRCUIT

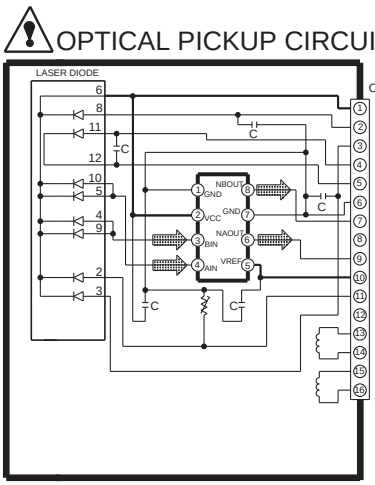

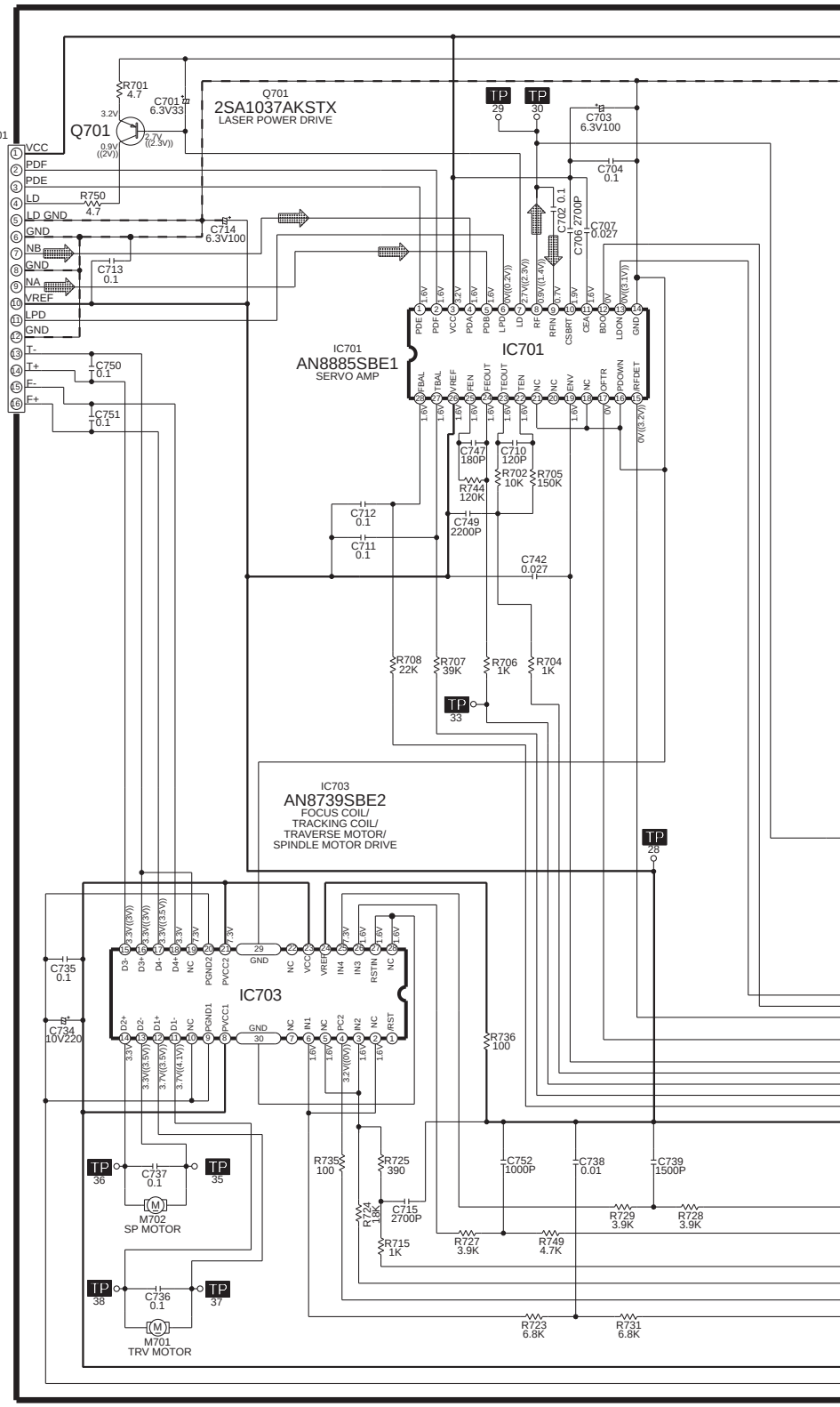

SCHEMATIC DIAGRAM - 2

—— : +B SIGNAL LINE – – : +B SIGNAL LINE : CD SIGNAL LINE

A CD SERVO CIRCUIT

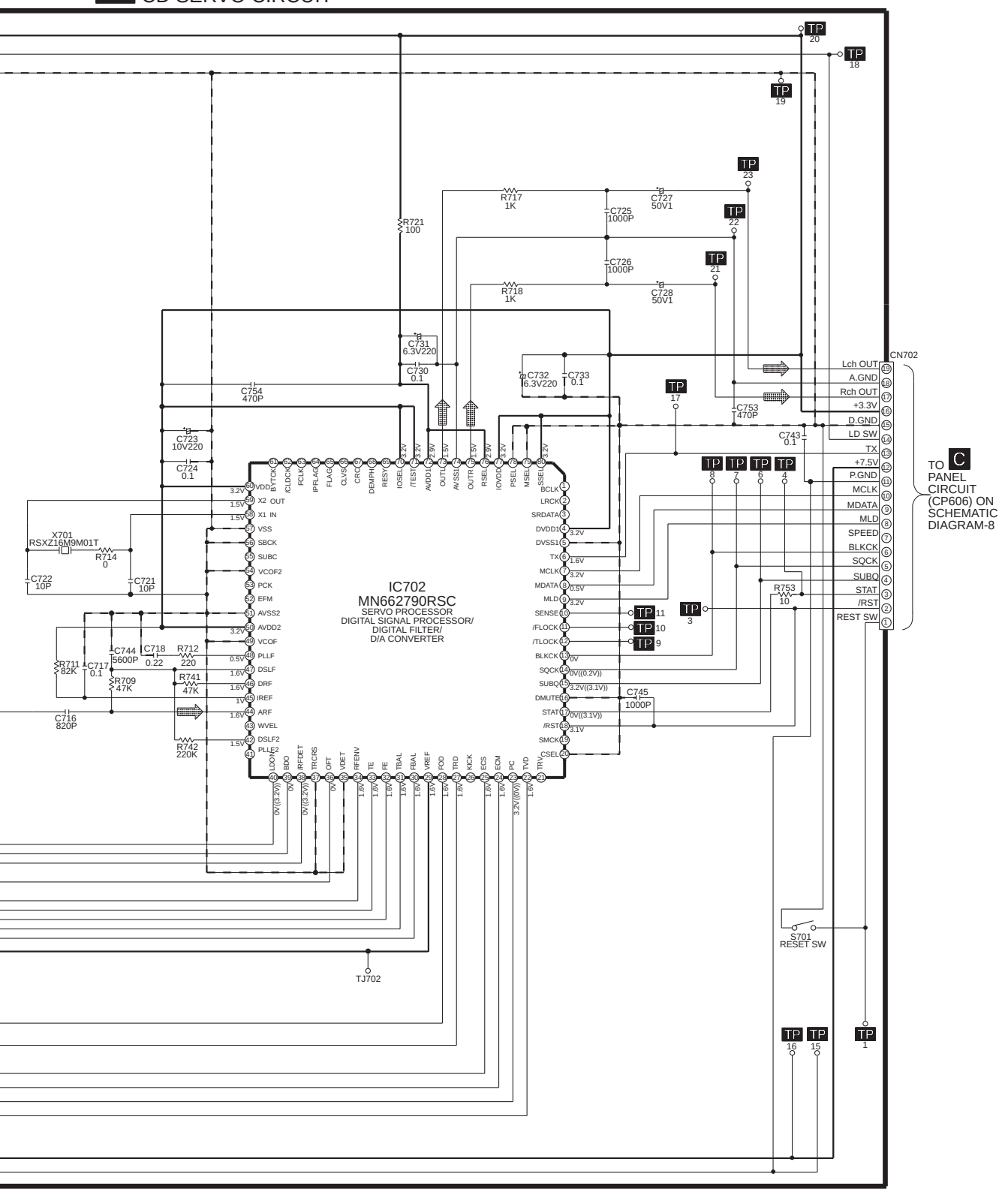

SCHEMATIC DIAGRAM - 3

: +B SIGNAL LINE
: FM SIGNAL LINE
: AM SIGNAL LINE
: FM/AM SIGNAL LINE
: FM OSC SIGNAL LINE
: AM OSC SIGNAL LINE

B TUNER CIRCUIT

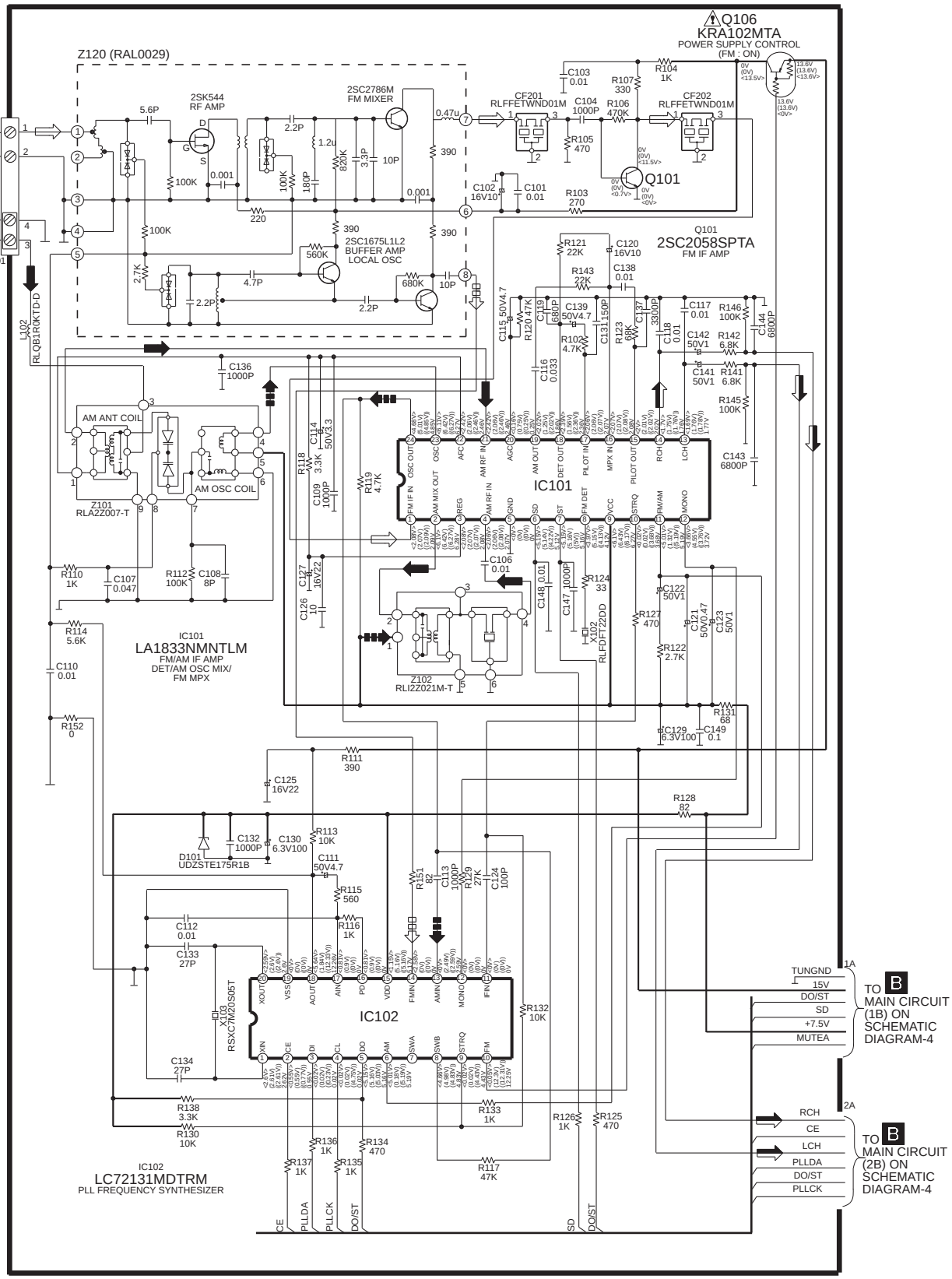

SCHEMATIC DIAGRAM - 4

—— : +B SIGNAL LINE
– – : +B SIGNAL LINE
: FM/AM SIGNAL LINE
: MAIN SIGNAL LINE
: AUX SIGNAL LINE
: CD SIGNAL LINE
: RECORD SIGNAL LINE

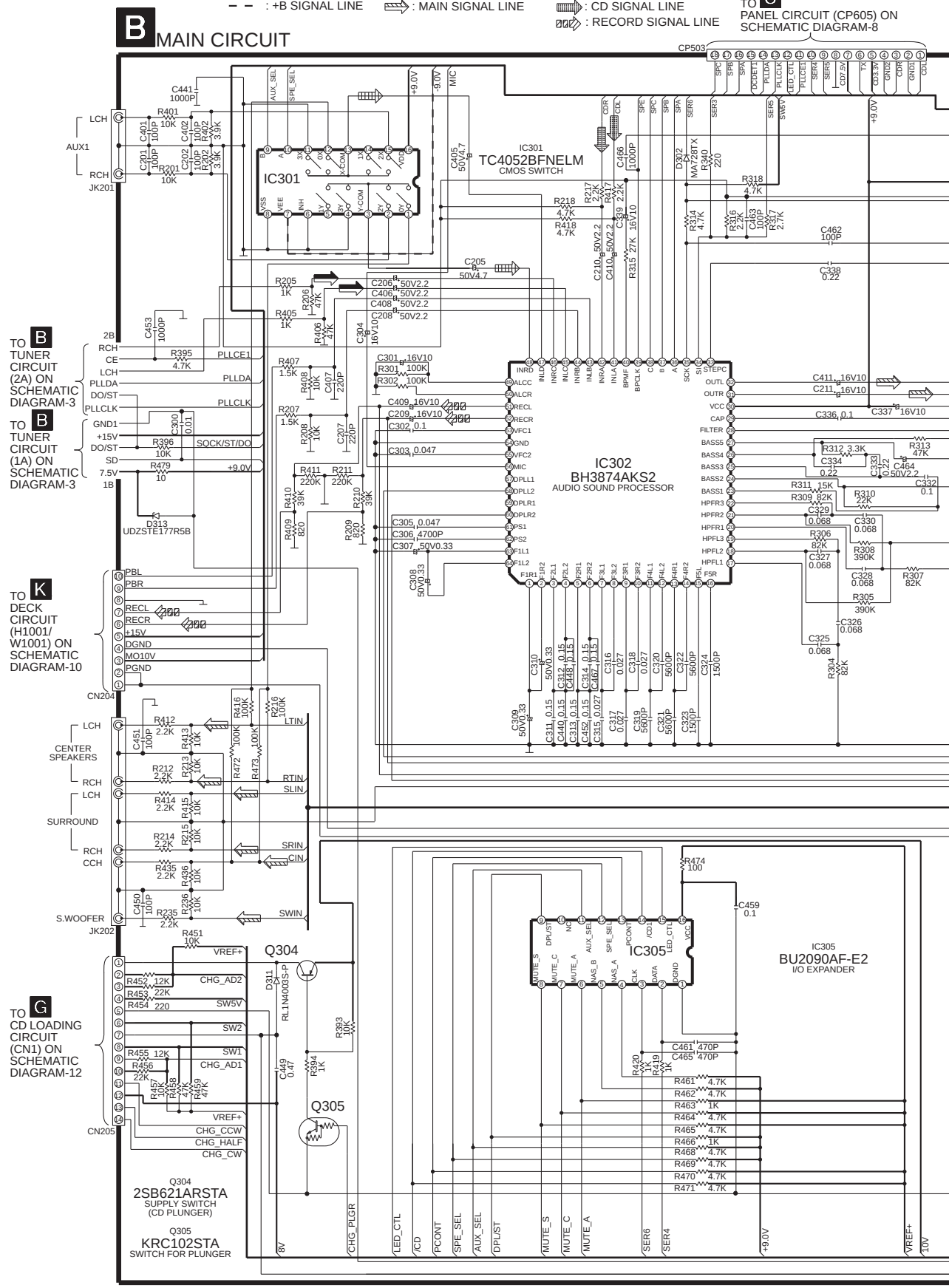

SCHEMATIC DIAGRAM - 5

—— : +B SIGNAL LINE
– – : +B SIGNAL LINE
⇨ : MAIN SIGNAL LINE

B MAIN CIRCUIT

TO C
PANEL CIRCUIT (CP607) ON
SCHEMATIC DIAGRAM-8

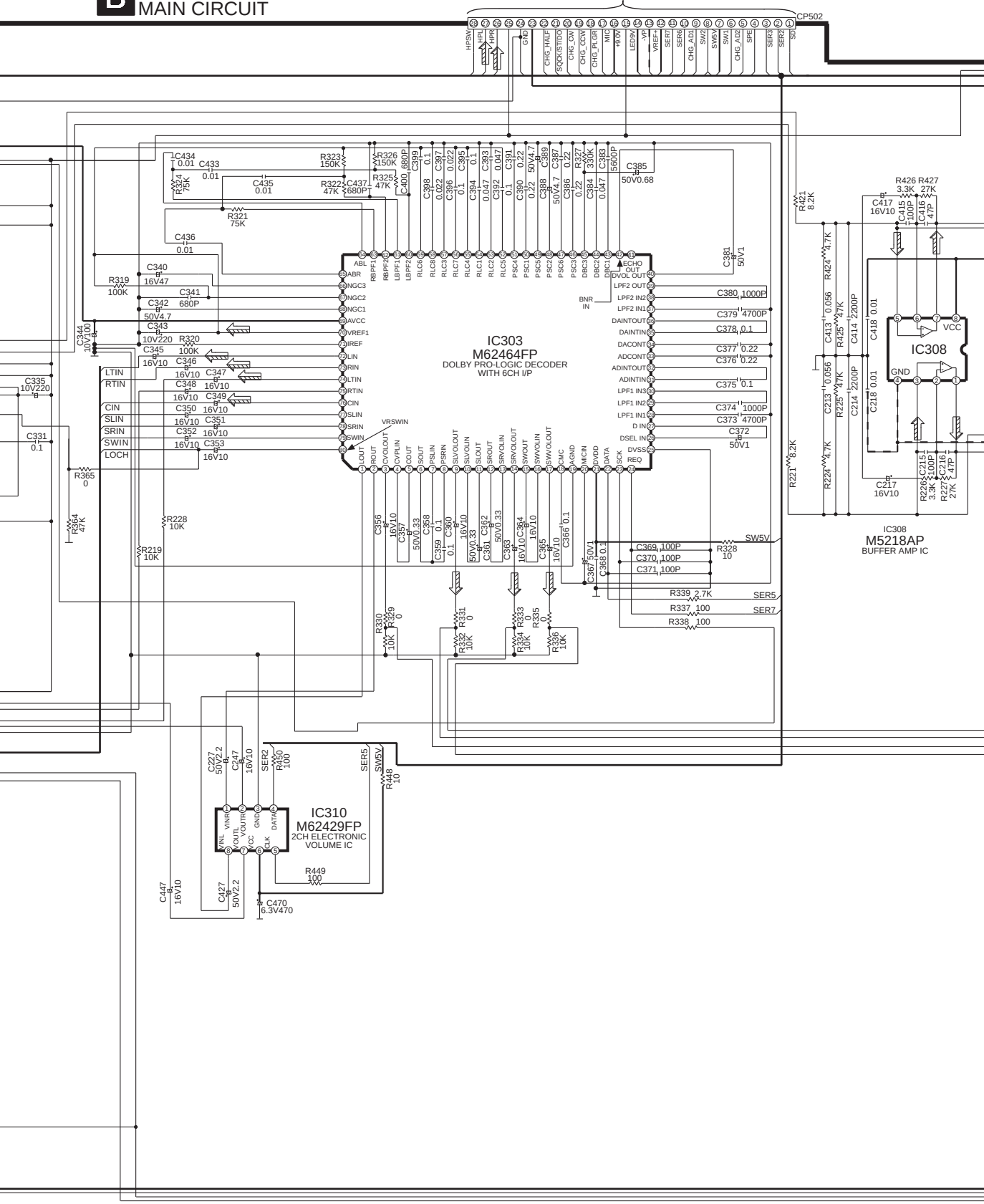

SCHEMATIC DIAGRAM - 6

—— : +B SIGNAL LINE
– – : +B SIGNAL LINE
⇨ : MAIN SIGNAL LINE

B MAIN CIRCUIT

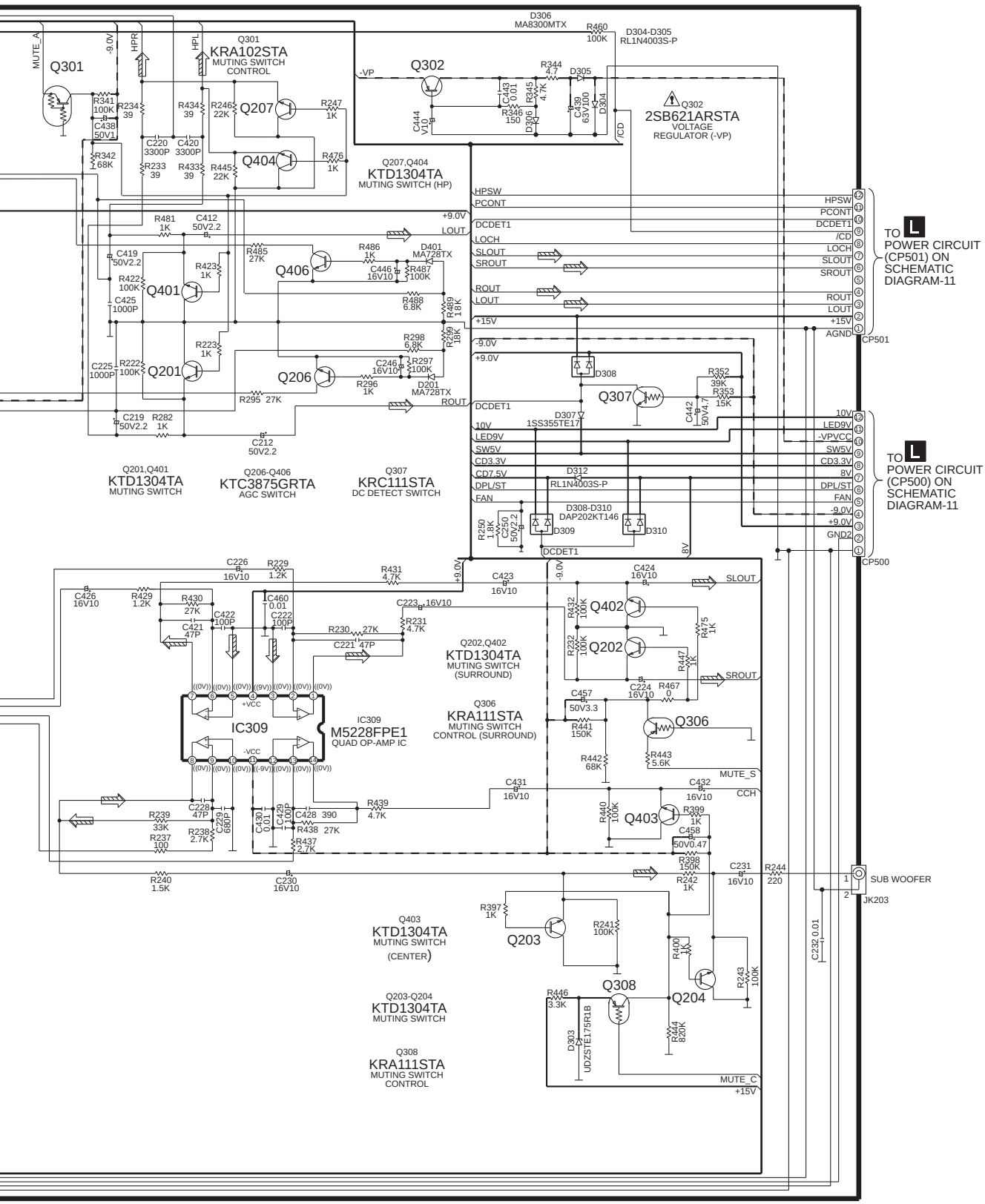

SCHEMATIC DIAGRAM - 7

—— : +B SIGNAL LINE : MAIN SIGNAL LINE : CD SIGNAL LINE

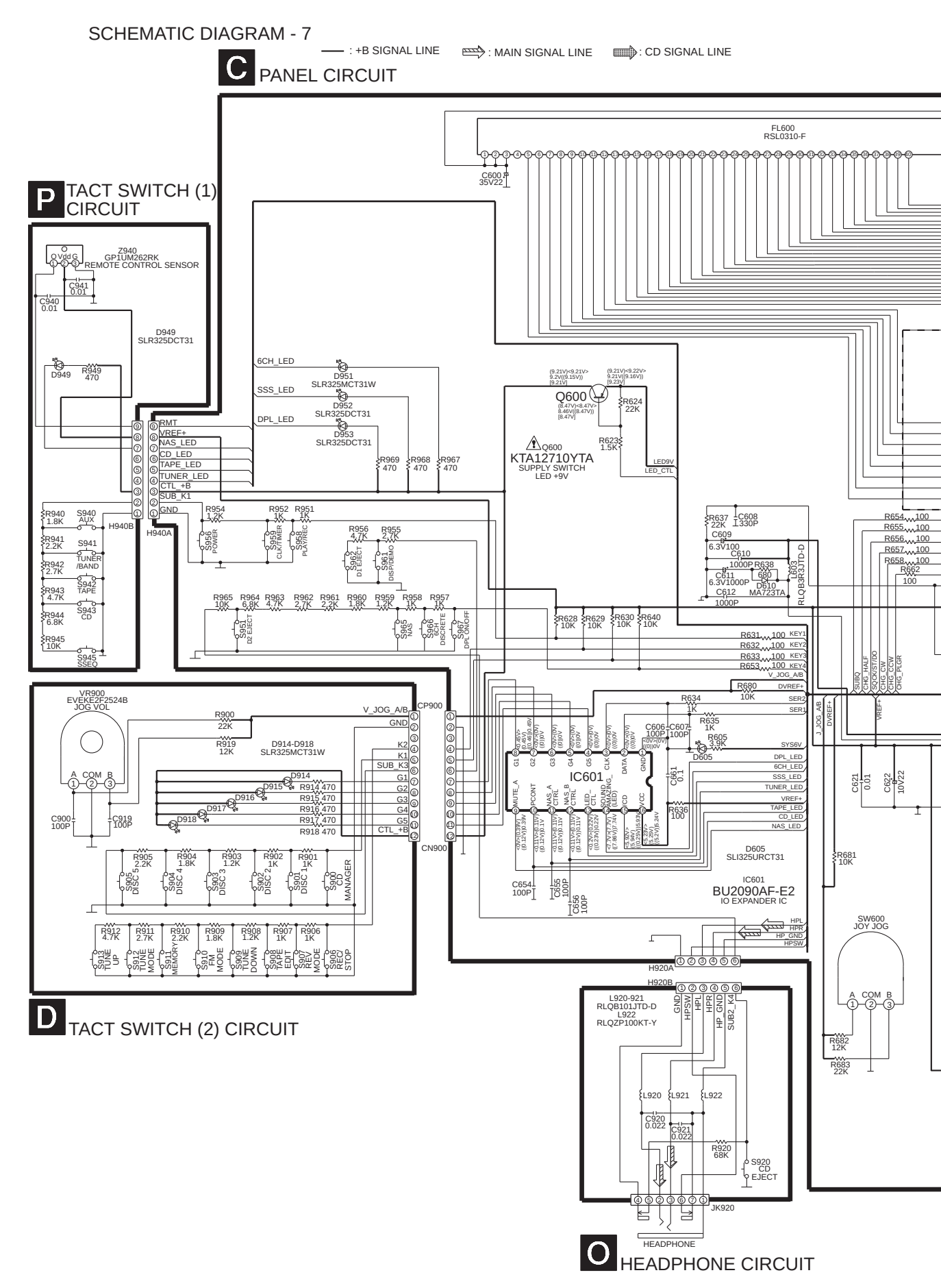

SCHEMATIC DIAGRAM - 8

C PANEL CIRCUIT

—— : +B SIGNAL LINE
– – : -B SIGNAL LINE
: MAIN SIGNAL LINE
: CD SIGNAL LINE

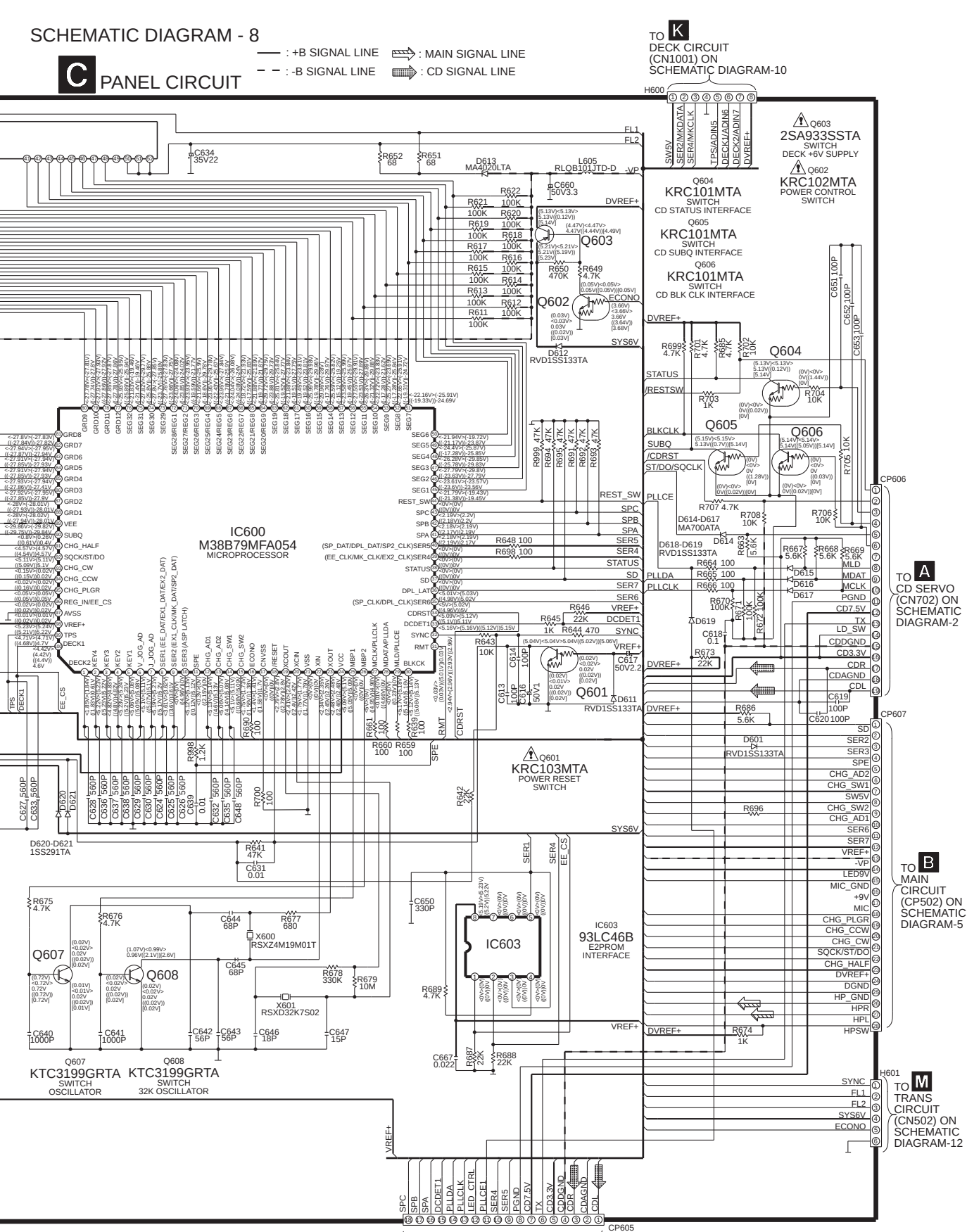

SCHEMATIC DIAGRAM - 9

—— : +B SIGNAL LINE
– – : -B SIGNAL LINE
▨ : PLAYBACK SIGNAL LINE
▨ : RECORD SIGNAL LINE

K DECK CIRCUIT

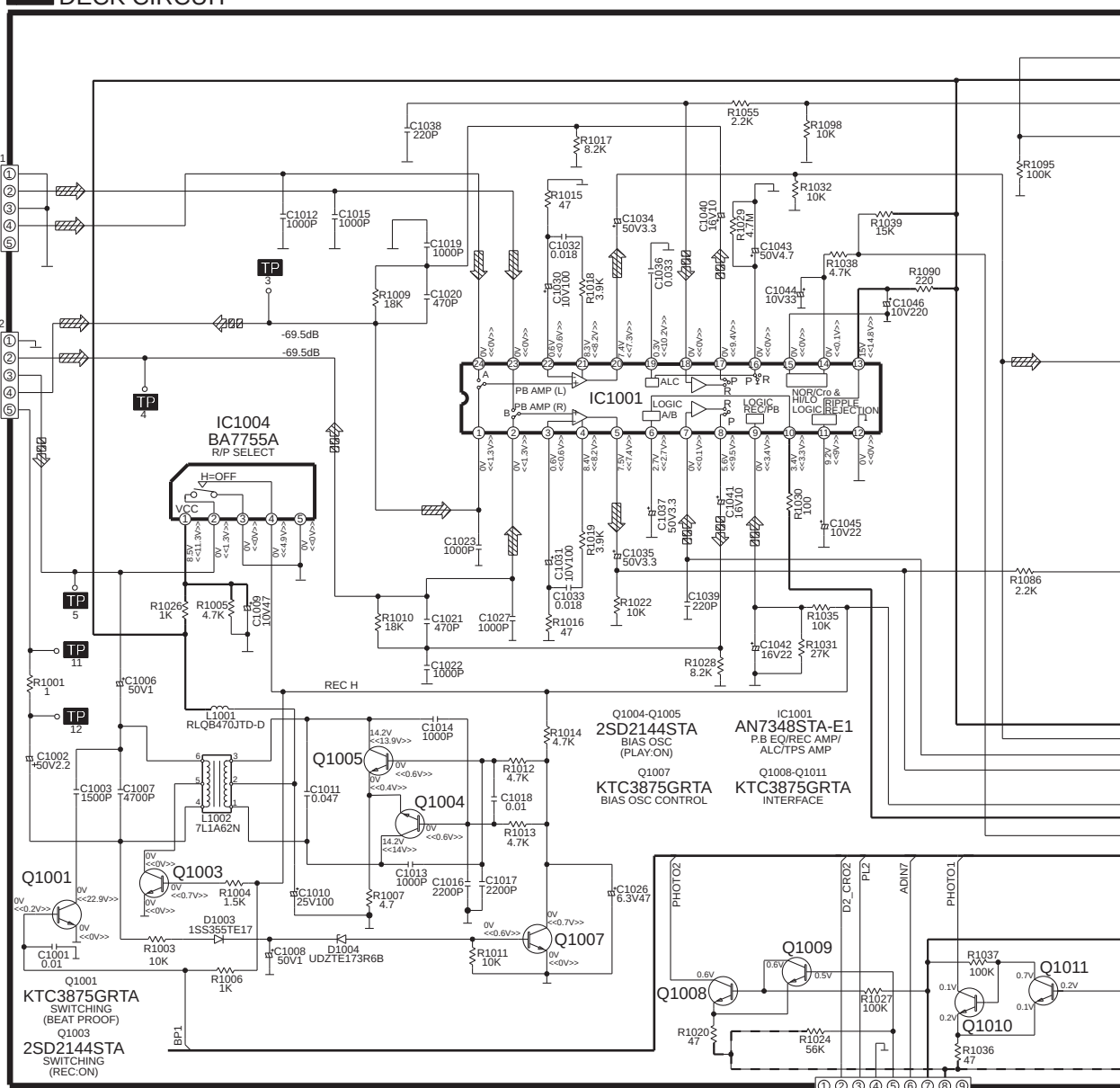

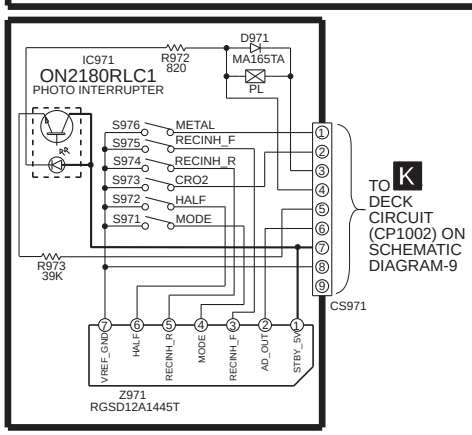

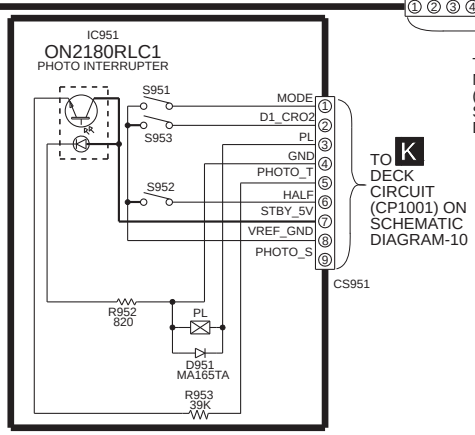

F MECHANISM CIRCUIT (DECK 2)

E MECHANISM CIRCUIT (DECK 1)

SCHEMATIC DIAGRAM - 10

—— : +B SIGNAL LINE
– – : -B SIGNAL LINE
: PLAYBACK SIGNAL LINE
: RECORD SIGNAL LINE

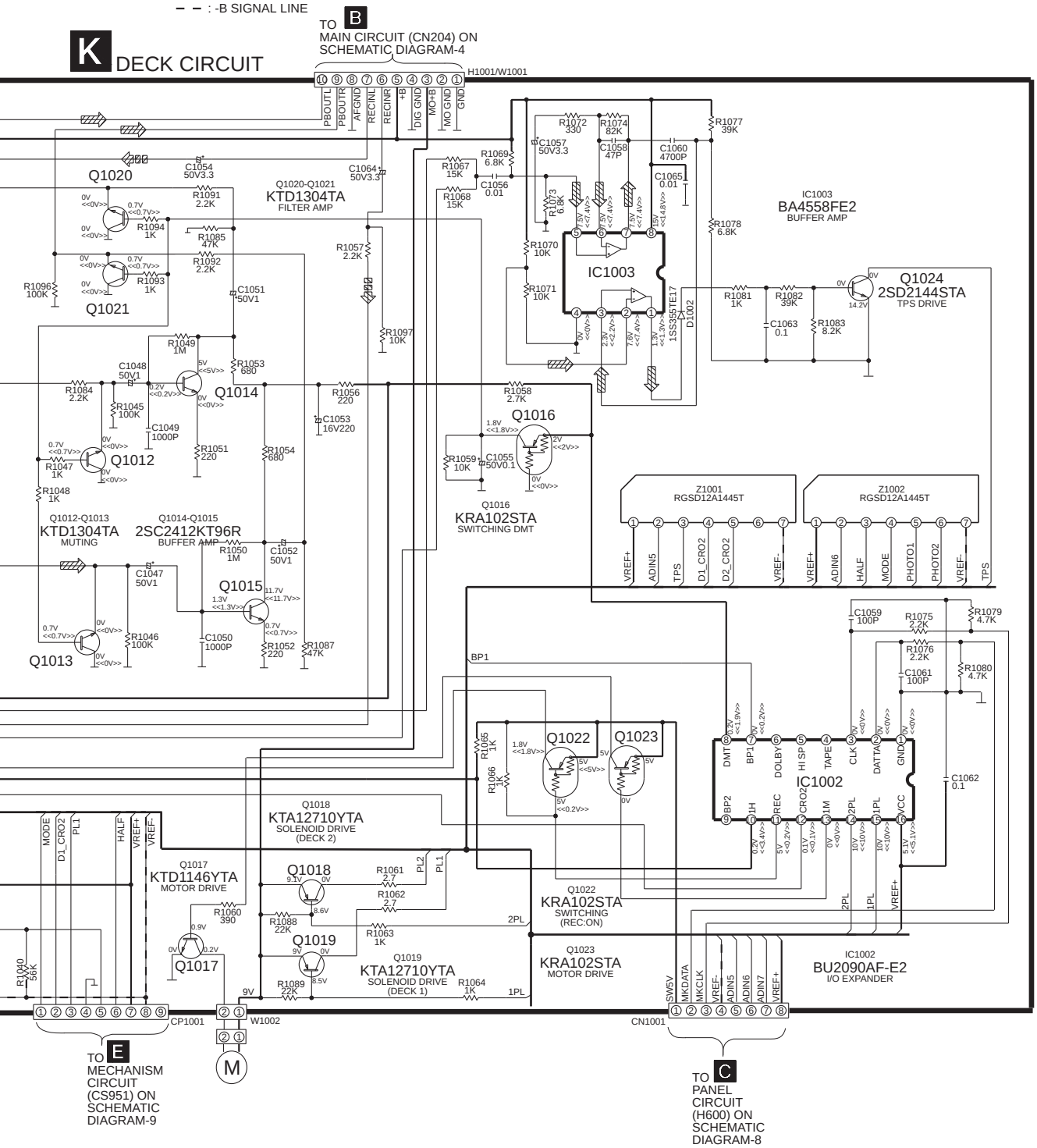

SCHEMATIC DIAGRAM - 11

—— : +B SIGNAL LINE – – : -B SIGNAL LINE ⇨ : MAIN SIGNAL LINE

L POWER CIRCUIT

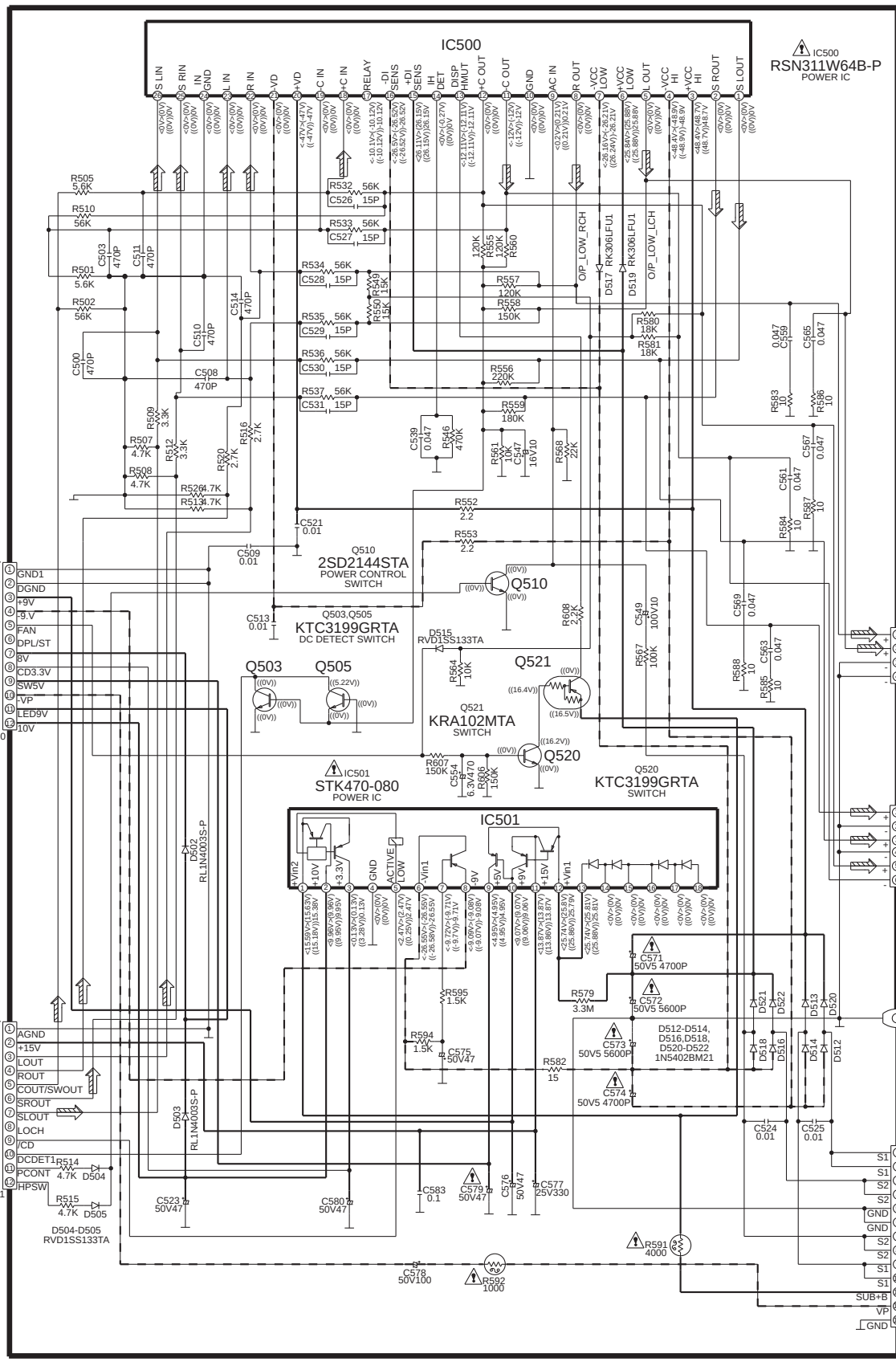

SCHEMATIC DIAGRAM -12

— : +B SIGNAL LINE

M AC TRANSFORMER CIRCUIT

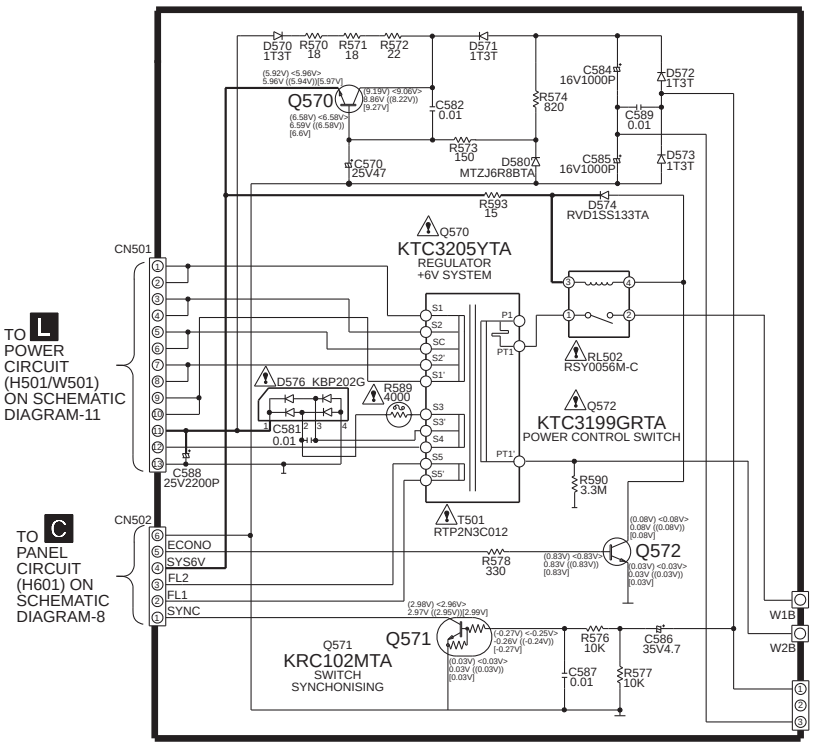

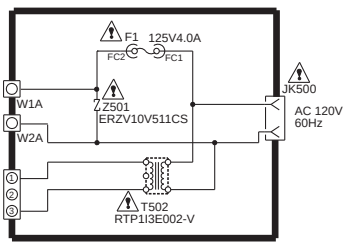

N SUB-TRANSFORMER CIRCUIT

G CD LOADING CIRCUIT

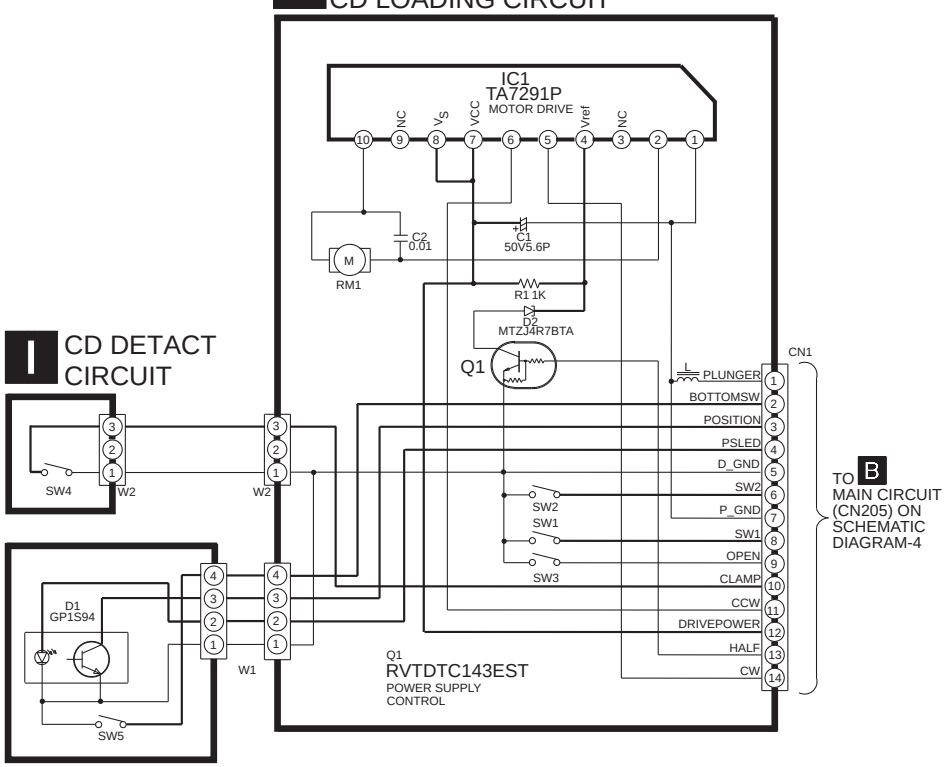

I CD DETACT CIRCUIT

H SPINDLE POSITION CIRCUIT