HCD-GNX60/GNX70/ GX9900

SERVICE MANUAL

Ver.1.0 2005. 03

US Model
HCD-GX9900
E Model
Australian Model
HCD-GNX60/GNX70

Photo : HCD-GNX70

- HCD-GNX60/GNX70/GX9900 are the Amplifier, CD player, tape deck and tuner section in MHC-GNX60/GNX70/GX9900.

CD Section	Model Name Using Similar Mechanism	HCD-GN880
	CD Mechanism Type	CDM74-F1BD81
	Base Unit Name	BU-F1BD81A
	Optical Pick-up Name	KSM-215DCP/C2NP
TAPE Section	Model Name Using Similar Mechanism	NEW
	Tape Transport Mechanism Type	CMAT5Z2

SPECIFICATIONS

AUDIO POWER SPECIFICATION (MHC-GX9900 USA model only)
POWER OUTPUT AND TOTAL HARMONIC DISTORTION:

With 6-ohm loads, both channels driven, from 120 Hz – 10 kHz; rates 230 watts per channel minimum RMS power, with no more than 10% total harmonic distortion from 250 miliwatts to rated output.

Amplifier section MHC-GX9900
Total harmonic distortion — Less than 0.1% (6 ohms at 1 kHz, 100 W)

MHC-GNX70
The following are measured at
Mexican model: AC 127 V, 60 Hz
Other models: AC 120, 220, 240 V, 60 Hz
DIN power output (rated) 170 + 170 watts (6 ohms at 1 kHz, DIN)
Continuous RMS power output (reference) 220 + 220 watts (6 ohms at 1 kHz, 10% THD)

MHC-GNX60
The following are measured at
Mexican model: AC 127 V, 60 Hz
Brazil model: AC 127 V or 220 V, 60 Hz
Other models: AC 120, 220, 240 V, 50/60 Hz
DIN power output (rated) 150 + 150 watts (6 ohms at 1 kHz, DIN)
Continuous RMS power output (reference) 200 + 200 watts (6 ohms at 1 kHz,10% THD)

Inputs
VIDEO/MD (AUDIO) IN (phono jacks): voltage 250/450 mV, impedance 47 kiloohms
TV (AUDIO) IN (phono jack): voltage 250 mV, impedance 47 kiloohms
MIC (phone jack): sensitivity 1 mV, impedance 10 kiloohms

Outputs
PHONES (stereo mini jack): accepts headphones of 8 ohms or more
FRONT SPEAKER: Use only the supplied speaker
• SS-GNX100 (MHC-GNX70/GX9900)
• SS-GNX60 (MHC-GNX60)
SURROUND SPEAKER: Use only the supplied speaker
• SS-RSX80 (MHC-GNX70/GX9900)

Disc player section
System — Compact disc and digital audio system
Laser — Semiconductor laser (l=780 nm)
Emission duration: continuous
Laser Output — Max. 44.6 mW*
*This output is the value measured at a distance of 200 mm from the objective lens surface on the Optical Pick-up Block with 7 mm aperture.
Frequency response — 2 Hz – 20 kHz (±0.5 dB)
Wave length — 780 – 790 nm
Signal-to-noise ratio — More than 90 dB
Dynamic range — More than 90 dB

OPTICAL CD DIGITAL OUT (Square optical connector jack, rear panel)
(For MHC-GNX60/GNX70)
Wave length — 660 nm
Output Level — –18 dBm

– Continued on next page –

MiNi Hi-Fi COMPONENT SYSTEM

9-879-532-01
2005C0279-1
© 2005.03

Sony Corporation
Audio Group
Published by Sony Engineering Corporation

SONY®

Tape deck section

Recording system	4-track 2-channel stereo
Frequency response	50 – 13,000 Hz (±3 dB), using Sony TYPE I tape

Tuner section

FM stereo, FM/AM superheterodyne tuner

FM tuner section

Tuning range	87.5 – 108.0 MHz
Antenna	FM lead antenna
Antenna terminals	75 ohm unbalanced
Intermediate frequency	10.7 MHz

AM tuner section

Tuning range

North and Latin American models:	530 – 1,710 kHz (with the interval set at 10 kHz) 531 – 1,710 kHz (with the interval set at 9 kHz)
Other models:	531 – 1,602 kHz (with the interval set at 9 kHz) 530 – 1,710 kHz (with the interval set at 10 kHz)
Antenna	AM loop antenna
Antenna terminals	External antenna terminal
Intermediate frequency	450 kHz

General

Power requirements	
North American model:	120 V AC, 60Hz
Australian model:	230 – 240 V AC, 50/60 Hz
Argentina model:	220 V AC, 50/60 Hz
Other models:	120 V, 220 V or 230 – 240 V AC, 50/60 Hz Adjustable with voltage selector
Power consumption	
MHC-GX9900	250 watts
MHC-GNX70	225 watts
MHC-GNX60	200 watts
Dimensions (w/h/d) (Approx.)	280 × 360 × 398.5 mm
Mass (Approx.)	
HCD-GNX70	12.1 kg
HCD-GX9900	11.8 kg
HCD-GNX60	11.3 kg

Design and specifications are subject to change without notice.

Notes on chip component replacement

- Never reuse a disconnected chip component.
- Notice that the minus side of a tantalum capacitor may be damaged by heat.

Flexible Circuit Board Repairing

- Keep the temperature of soldering iron around 270˚C during repairing.
- Do not touch the soldering iron on the same conductor of the circuit board (within 3 times).
- Be careful not to apply force on the conductor when soldering or unsoldering.

CAUTION

Use of controls or adjustments or performance of procedures other than those specified herein may result in hazardous radiation exposure.

This appliance is classified as a CLASS 1 LASER product. This label is located on the rear exterior.

SAFETY-RELATED COMPONENT WARNING!!

COMPONENTS IDENTIFIED BY MARK ⚠ OR DOTTED LINE WITH MARK ⚠ ON THE SCHEMATIC DIAGRAMS AND IN THE PARTS LIST ARE CRITICAL TO SAFE OPERATION. REPLACE THESE COMPONENTS WITH SONY PARTS WHOSE PART NUMBERS APPEAR AS SHOWN IN THIS MANUAL OR IN SUPPLEMENTS PUBLISHED BY SONY.

SAFETY CHECK-OUT

After correcting the original service problem, perform the following safety checks before releasing the set to the customer:
Check the antenna terminals, metal trim, “metallized” knobs, screws, and all other exposed metal parts for AC leakage. Check leakage as described below.

LEAKAGE

The AC leakage from any exposed metal part to earth ground and from all exposed metal parts to any exposed metal part having a return to chassis, must not exceed 0.5 mA (500 microamperes). Leakage current can be measured by any one of three methods.

1. A commercial leakage tester, such as the Simpson 229 or RCA WT-540A. Follow the manufacturers’ instructions to use these instruments.

2. A battery-operated AC milliammeter. The Data Precision 245 digital multimeter is suitable for this job.

3. Measuring the voltage drop across a resistor by means of a VOM or battery-operated AC voltmeter. The “limit” indication is 0.75 V, so analog meters must have an accurate low-voltage scale. The Simpson 250 and Sanwa SH-63Trd are examples of a passive VOM that is suitable. Nearly all battery operated digital multimeters that have a 2V AC range are suitable. (See Fig. A)

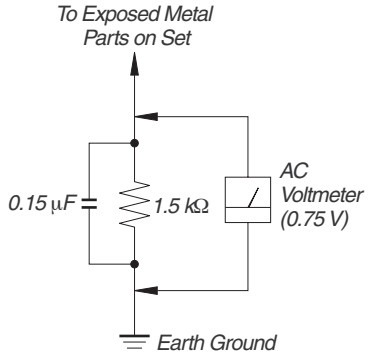

Fig. A. Using an AC voltmeter to check AC leakage.

Unleaded solder

Boards requiring use of unleaded solder are printed with the lead free mark (LF) indicating the solder contains no lead.
(Caution: Some printed circuit boards may not come printed with the lead free mark due to their particular size.)

: LEAD FREE MARK

Unleaded solder has the following characteristics.

- Unleaded solder melts at a temperature about 40°C higher than ordinary solder.
  Ordinary soldering irons can be used but the iron tip has to be applied to the solder joint for a slightly longer time.
  Soldering irons using a temperature regulator should be set to about 350°C.
  Caution: The printed pattern (copper foil) may peel away if the heated tip is applied for too long, so be careful!
- Strong viscosity
  Unleaded solder is more viscous (sticky, less prone to flow) than ordinary solder so use caution not to let solder bridges occur such as on IC pins, etc.
- Usable with ordinary solder
  It is best to use only unleaded solder but unleaded solder may also be added to ordinary solder.

TABLE OF CONTENTS

1. SERVICING NOTES 4

2. GENERAL
Location of Controls 5

3. DISASSEMBLY
3-1. Disassembly Flow 7
3-2. Side Panel, Top Case 8
3-3. Loading Panel Assy 8
3-4. Front Panel Assy 9
3-5. Tuner Pack 9
3-6. Tape Mechanism Deck, Mic Board 10
3-7. Panel Board, CD-SW Board 10
3-8. CD Mechanism Deck 11
3-9. Back Panel 11
3-10. Primary Board 12
3-11. Power AMP PC Board Assy, Main Board 12
3-12. Surround Board, PA Board 13
3-13. Power Transformer (T1200) 13
3-14. Driver Board, SW Board 14
3-15. CD Board 14
3-16. Sensor Board 15
3-17. Motor (TB) Board 15
3-18. Motor (LD) Board 16

4. TEST MODE 17

5. MECHANICAL ADJUSTMENTS 21

6. ELECTRICAL ADJUSTMENTS
Deck section 21
CD Section 22

7. DIAGRAMS
7-1. Circuit Board Location 26
7-2. Block Diagram – CD Section – 27
7-3. Block Diagram – Tape Section – 28
7-4. Block Diagram – Main Section – 29
7-5. Block Diagram – AMP Section – 30
7-6. Block Diagram – Display Section – 31
7-7. Printed Wiring Board – CD Board – 32
7-8. Schematic Diagram – CD Board – 33
7-9. Printed Wiring Board – CD Mechanism Boards – 34
7-10. Schematic Diagram – CD Mechanism Boards – 35
7-11. Printed Wiring Boards – Main Board – 36
7-12. Schematic Diagram – Main Board (1/3) – 37
7-13. Schematic Diagram – Main Board (2/3) – 38
7-14. Schematic Diagram – Main Board (3/3) – 39
7-15. Printed Wiring Boards – Panel Board – 40
7-16. Schematic Diagram – Panel Board – 41
7-17. Printed Wiring Board – CD-SW, Jog, Mic Boards – 42
7-18. Schematic Diagram – CD-SW, Jog, Mic Boards – 43
7-19. Printed Wiring Board – PA Board – 44
7-20. Schematic Diagram – PA Board – 45
7-21. Printed Wiring Board – Trans, Primary Boards – 46
7-22. Schematic Diagram – Trans, Primary Boards – 47
7-23. IC Pin Function Description 50

8. EXPLODED VIEWS
8-1. Case (Top), Rear Panel Section 56
8-2. Front Panel Section 57
8-3. Chassis Section 58
8-4. CD Mechanism Deck Section-1 (CDM74-F1BD81) 59
8-5. CD Mechanism Deck Section-2 (CDM74-F1BD81) 60

9. ELECTRICAL PARTS LIST 61

SECTION 1
SERVICING NOTES

NOTES ON HANDLING THE OPTICAL PICK-UP BLOCK OR BASE UNIT

The laser diode in the optical pick-up block may suffer electrostatic break-down because of the potential difference generated by the charged electrostatic load, etc. on clothing and the human body.
During repair, pay attention to electrostatic break-down and also use the procedure in the printed matter which is included in the repair parts.
The flexible board is easily damaged and should be handled with care.

NOTES ON LASER DIODE EMISSION CHECK

The laser beam on this model is concentrated so as to be focused on the disc reflective surface by the objective lens in the optical pick-up block. Therefore, when checking the laser diode emission, observe from more than 30 cm away from the objective lens.

LASER DIODE AND FOCUS SEARCH OPERATION CHECK

Carry out the "S curve check" in "CD section adjustment" and check that the S curve waveform is output several times.

• MODEL IDENTIFICATION
– Back Panel –

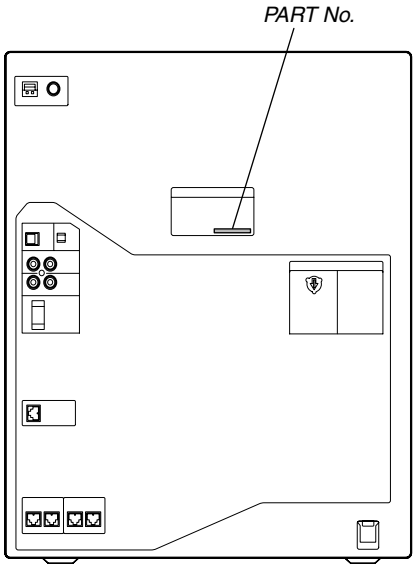

MODEL	PART No.
GNX60: E2, E3 models	2-547-454-0□
GNX70: E2, E3 models	2-547-456-0□
GX9900 model	2-547-458-0□
GNX60: AR model	2-588-965-0□
GNX60: E51 model	2-588-966-0□
GNX70: AUS model	2-588-967-0□
GNX70: E51 model	2-588-968-0□
GNX60: AUS model	2-588-974-0□

- Abbreviation
  AR : Argentine model
  E2 : 120 V AC Area in E model
  E3 : 240 V AC Area in E model
  E51 : Chilean and Peruvian model
  AUS : Australian model

SECTION 2
GENERAL

This section is extracted from instruction manual.

LOCATING THE CONTROLS

List of button locations and reference pages

Main unit

ALPHABETICAL ORDER

A – D

ALBUM +/– 19
AMP MENU 33
AUTO/MANUAL[3] 2
CD 39
CD SYNC 13
Deck A 31
Deck B 22
DIRECTION 18
DISC 1 ~ 3 7
Disc tray 9
DISPLAY 43
Display 44

E – L

ECHO LEVEL 24
ENTER 21
EQ BAND 11
EX-CHANGE/DISC SKIP 6
GROOVE 36
ILLUMINATION 42
IR Receptor 40

M – R

MASTER VOLUME 8

MIC 1 (jack) 27
MIC 2 (jack) 26
MIC LEVEL 25
MP3 BOOSTER 10
MPX[4] 18
OPERATION DIAL 29
PHONES (jack) 28
Power illuminator 23
REC PAUSE/START 16

S – Z

SOUND FLASH 30
SPEAKERS[3] 1
SURROUND[1] 45
SURR SPEAKER MODE[2] 45
TAPE A/B 37
Tape lid 22 31
TUNER/BAND 38
TUNING +/– 17
TV 35
VIDEO/MD 34
X-ROUND buttons[3] 3
WAVE/FADER/BALANCE/RANDOM/TWISTER
X-ROUND JOG[3] 4
X-ROUND OFF[3] 1

SYMBOLS

I/⏻ (power) 41
⏏ OPEN/CLOSE 5
◄ ► (play) 12
⏮ ⏭ (go backward/forward) 17
◄◄ ►► (rewind/fast forward) 19
❚❚ (pause) 14
■ (stop) 15
⏏ A (Eject A) 32
B ⏏ (Eject B) 20

[1] For MHC-GNX100/GNX66/GNX60
[2] For MHC-GNX88/GNX80/GNX77/GNX70/GX9900
[3] MHC-GNX100 only
[4] For MHC-GNX88/GNX77/GNX66

Top Panel

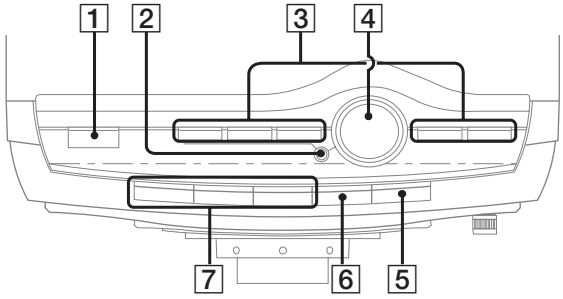

Front Panel

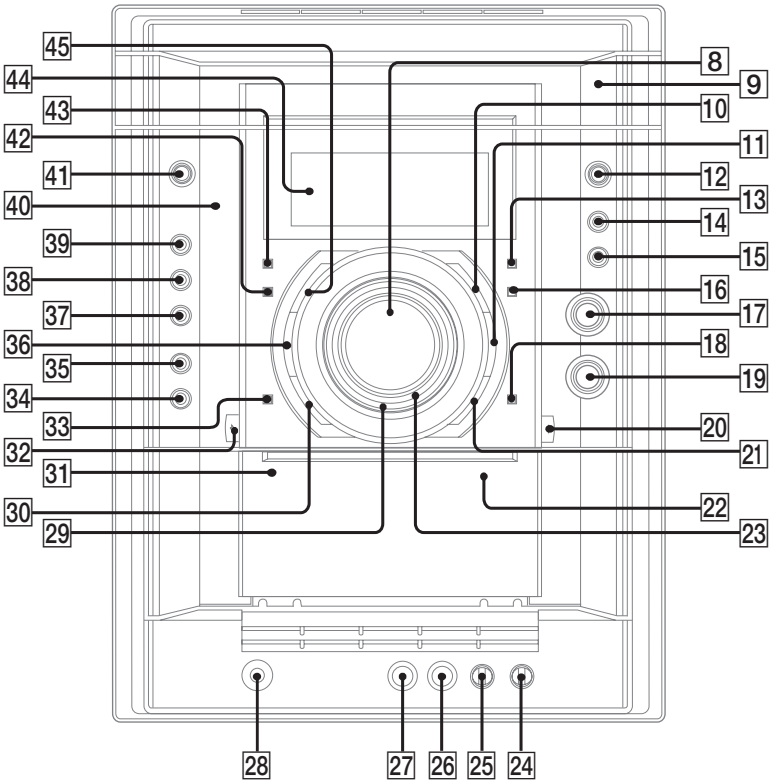

This section is extracted from instruction manual.

Remote control

ALPHABETICAL ORDER

A – E

ALBUM + 14
ALBUM – 16
CD 24
CLEAR 18
CLOCK/TIMER SELECT 2
CLOCK/TIMER SET 4
DISC SKIP 13
DISPLAY 26
ENTER 12
EQ 17

F – Z

FM MODE 6
FUNCTION 8
PLAY MODE 5
REPEAT 6
SLEEP 1
TAPE 23
TUNER/BAND 7
TUNER MEMORY 25
TUNING MODE 5
VOLUME +/– 15
The + button has a tactile dot.*

SYMBOLS

I/⏻ (power) 3
■ (stop) 11
❚❚ (pause) 19
► (play) 20
–⏮ (go backward) 22
⏭+ (go forward) 21
◀◀ (rewind) 10
▶▶ (fast forward) 9

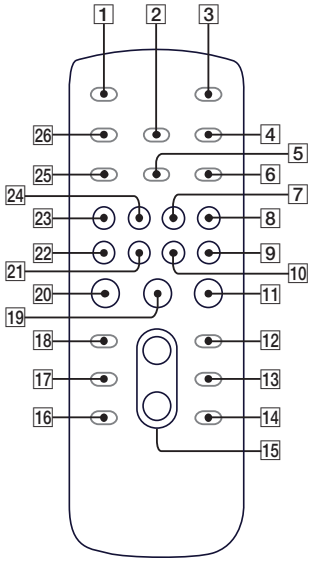

* Use the tactile dot as a reference when operating the system.

SECTION 3
DISASSEMBLY

• This set can be disassembled in the order shown below.

3-1. DISASSEMBLY FLOW

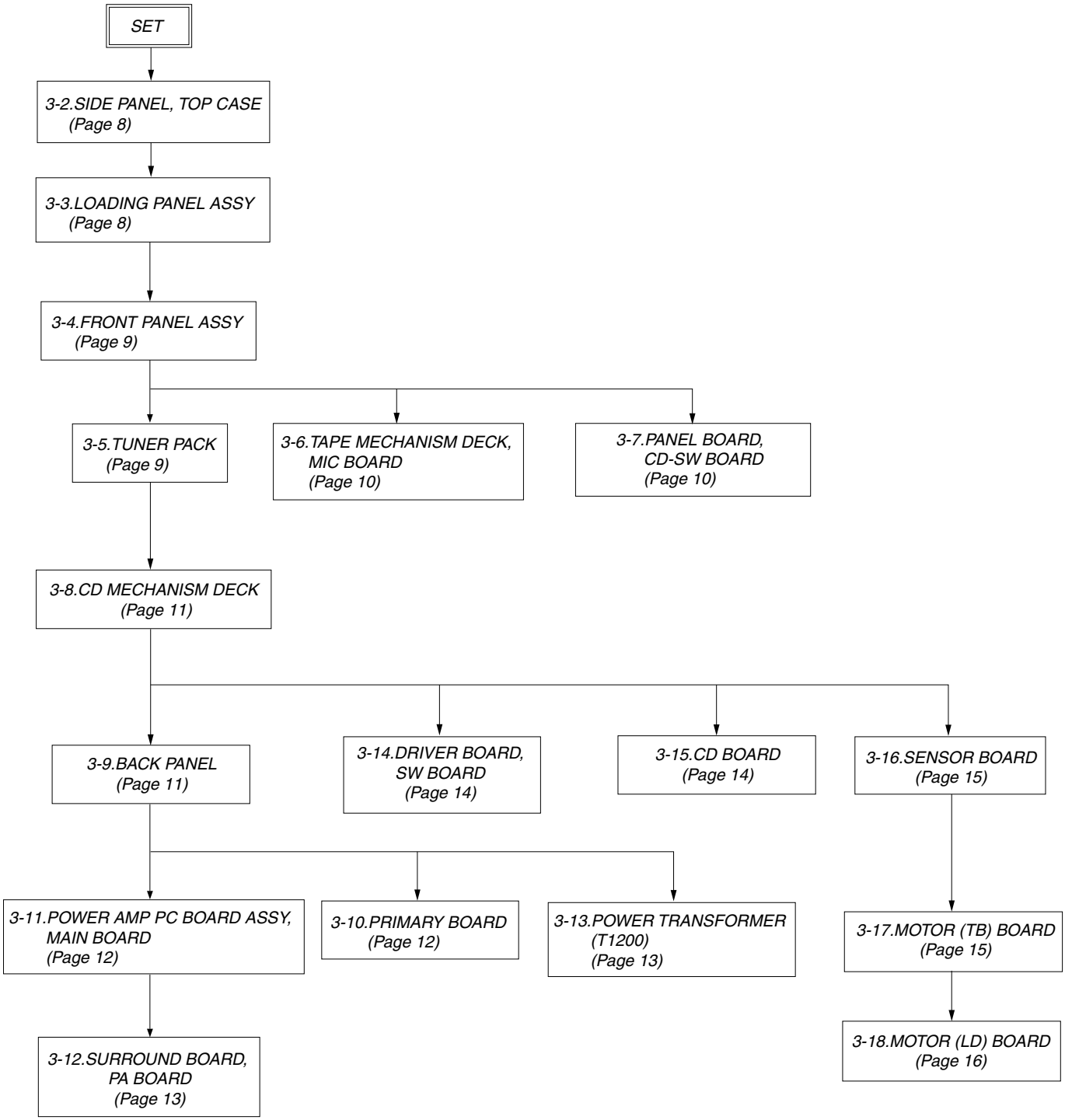

Note: Follow the disassembly procedure in the numerical order given.

3-2. SIDE PANEL, TOP CASE

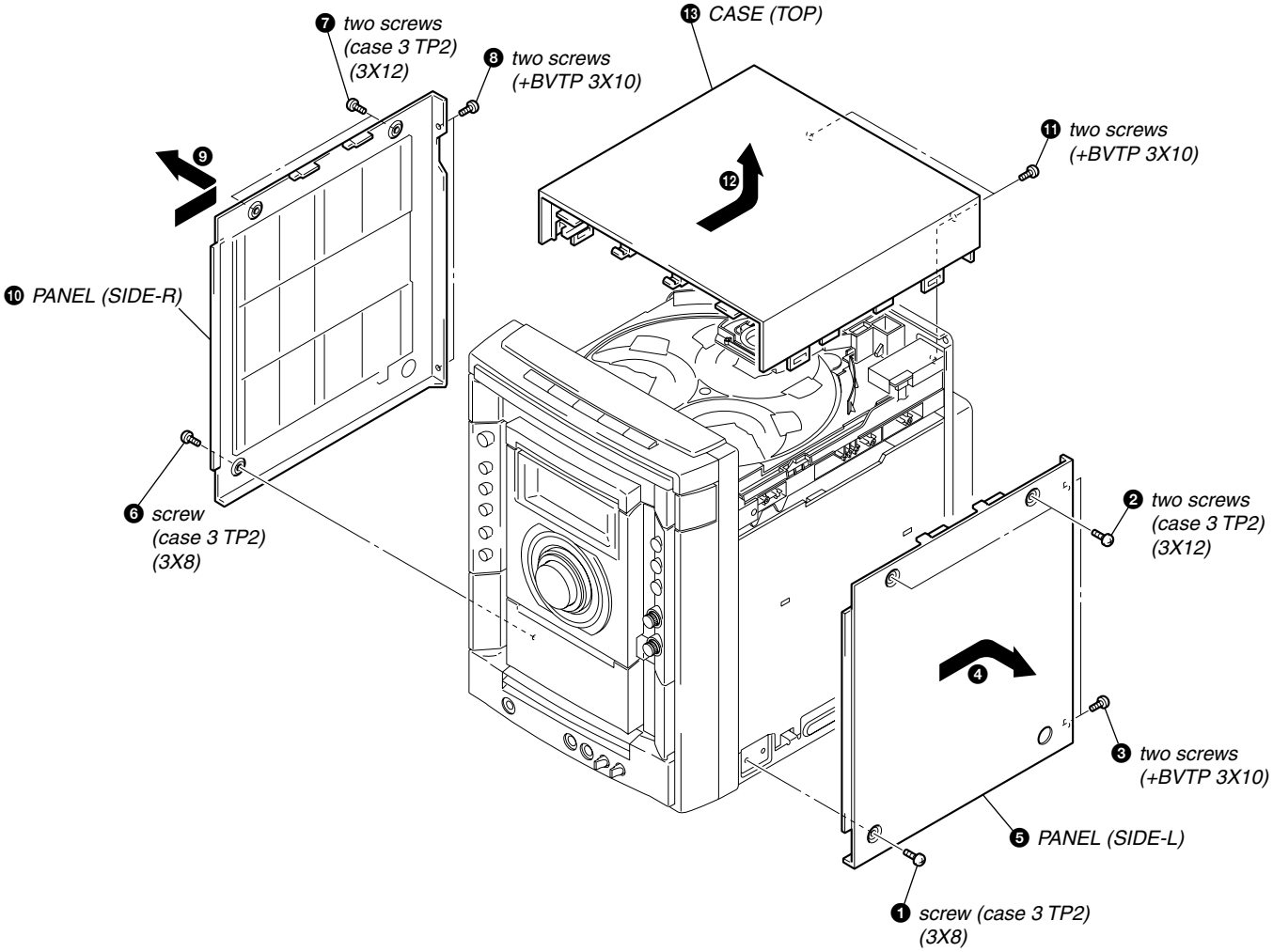

3-3. LOADING PANEL ASSY

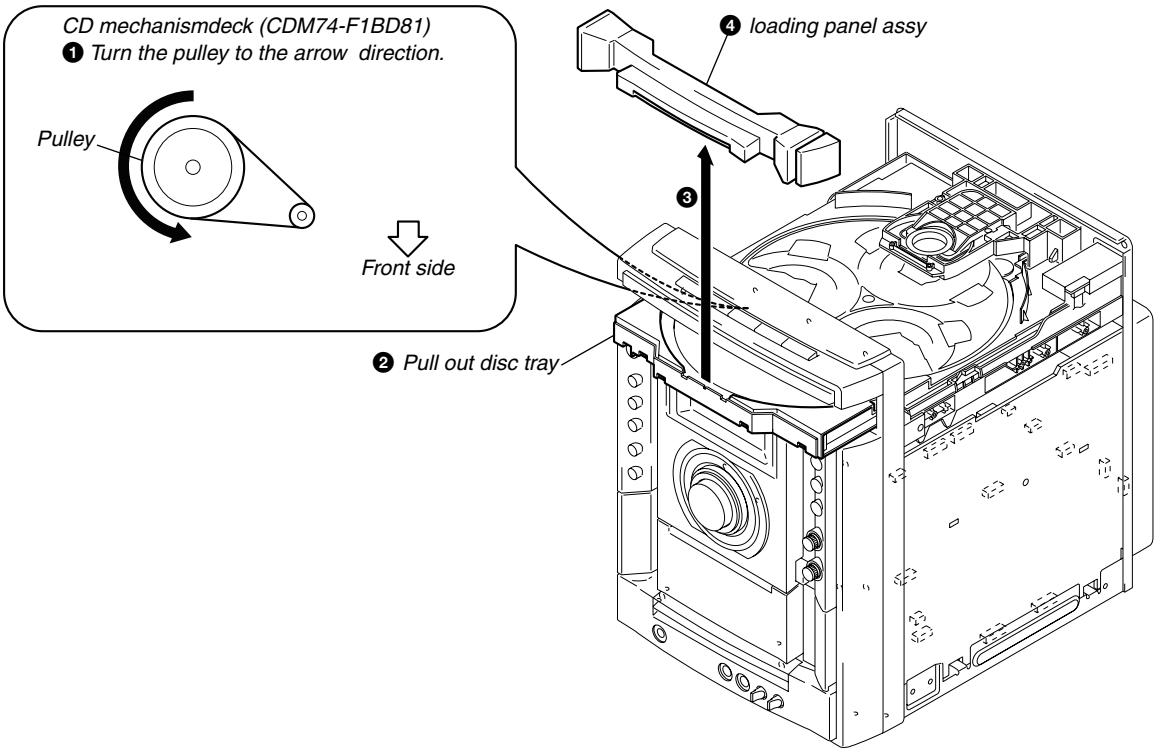

3-4. FRONT PANEL ASSY

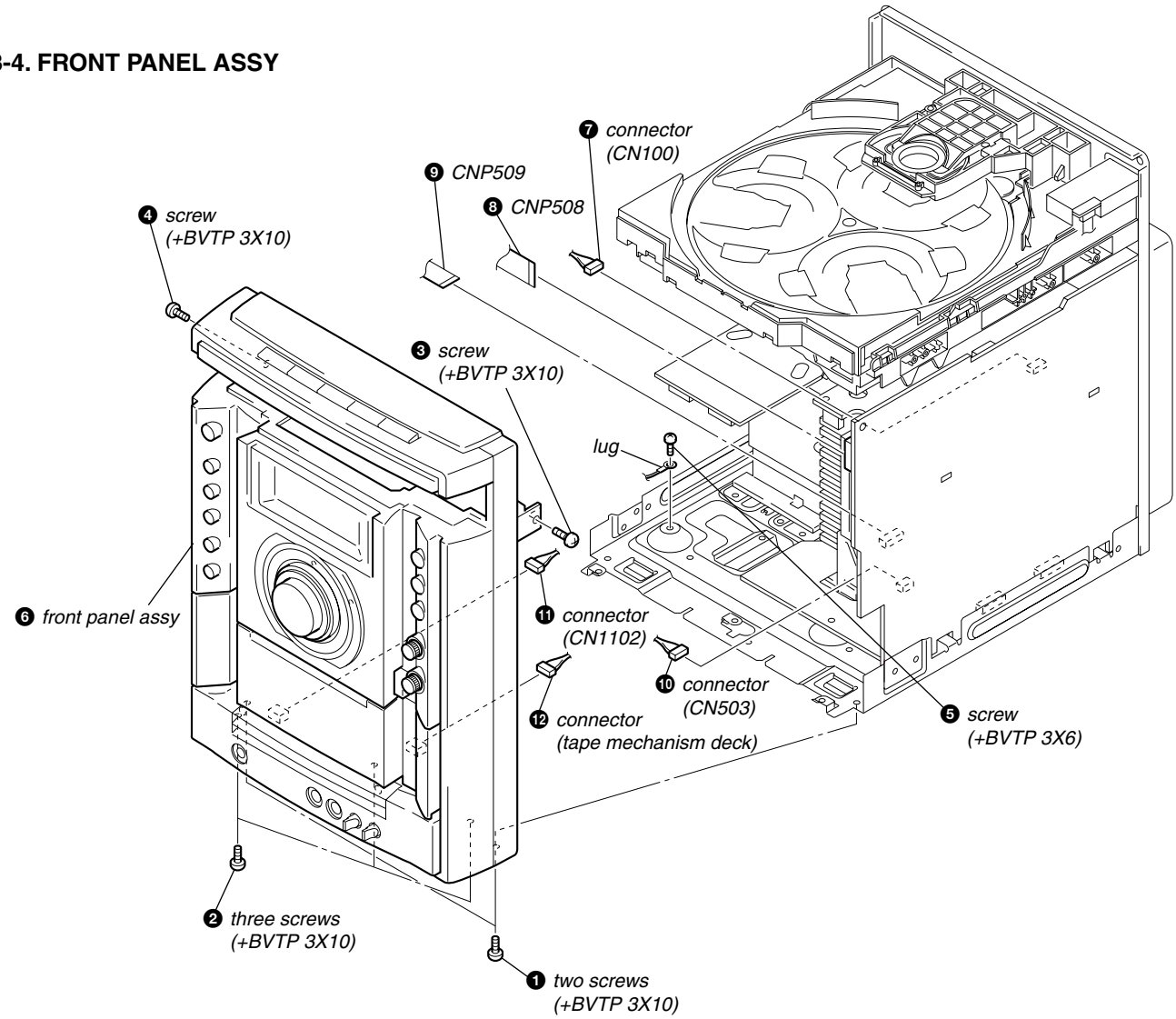

3-5. TUNER PACK

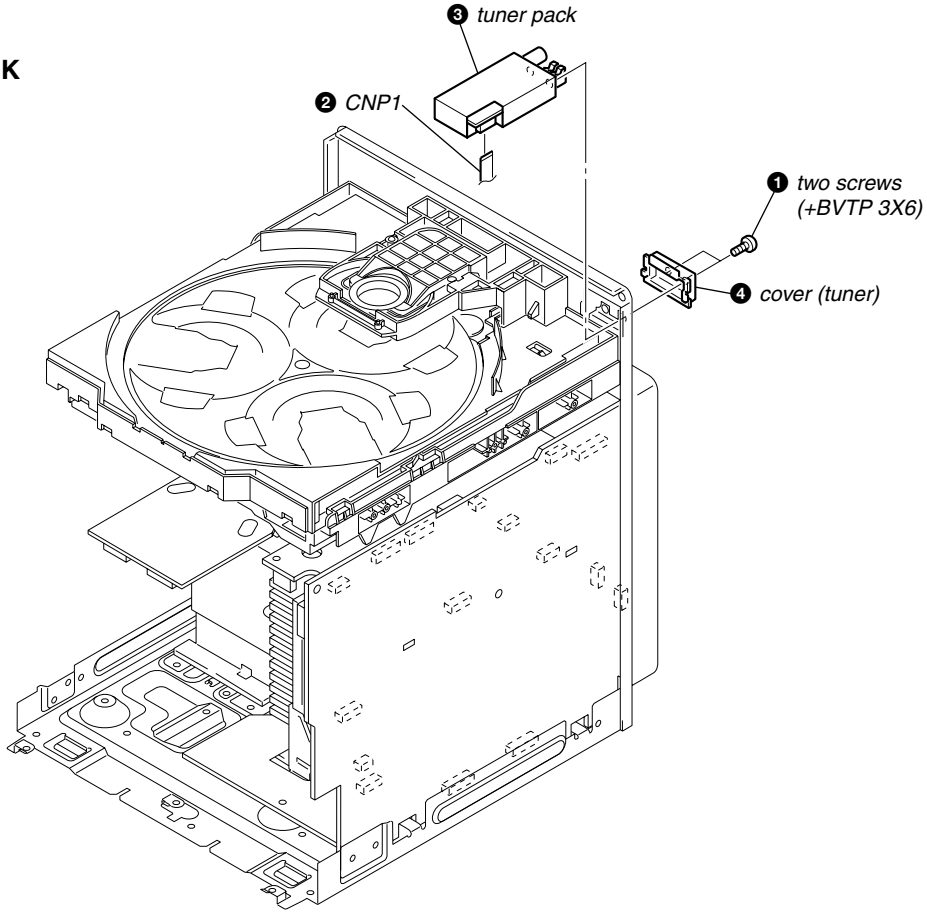

3-6. TAPE MECHANISM DECK, MIC BOARD

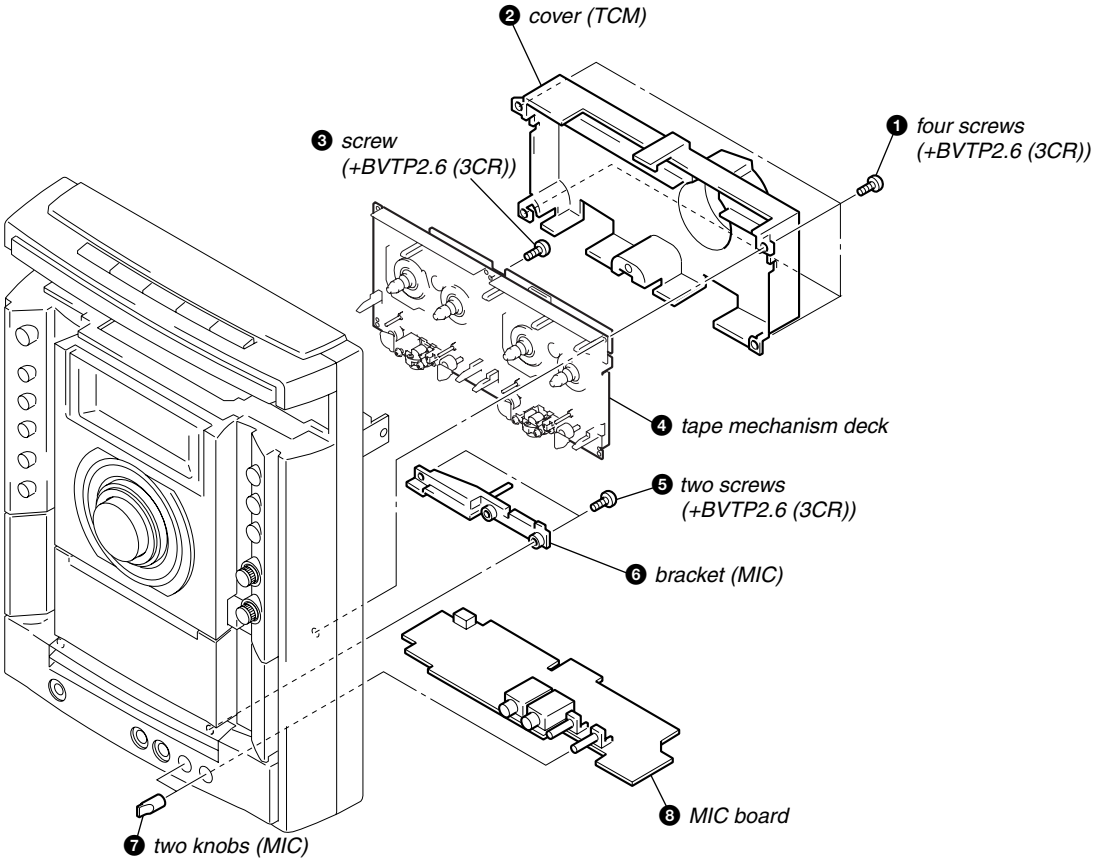

3-7. PANEL BOARD, CD-SW BOARD

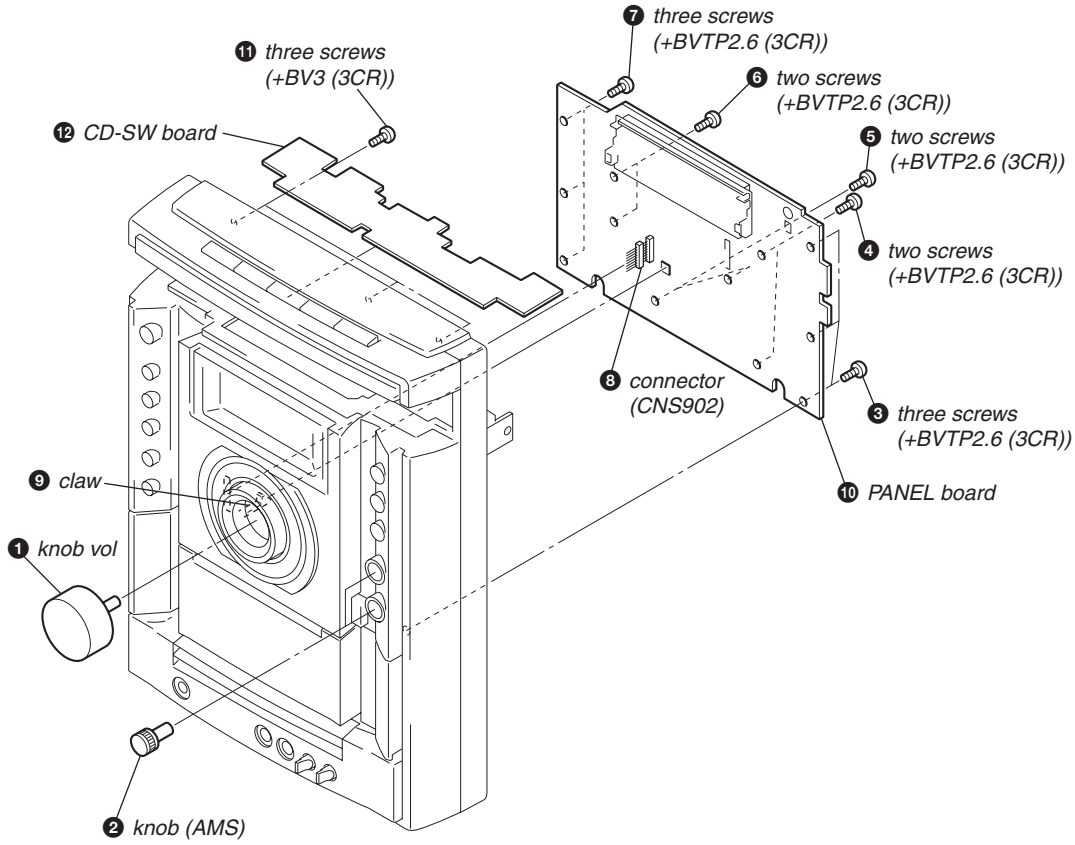

3-8. CD MECHANISM DECK

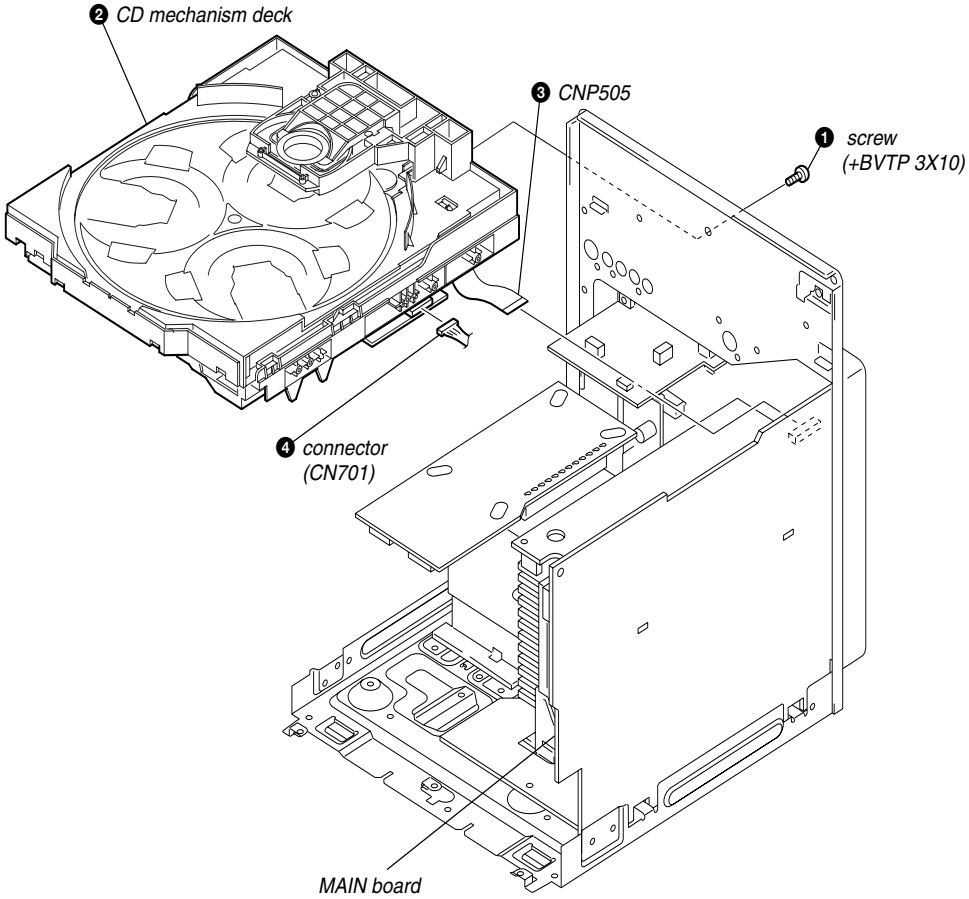

3-9. BACK PANEL

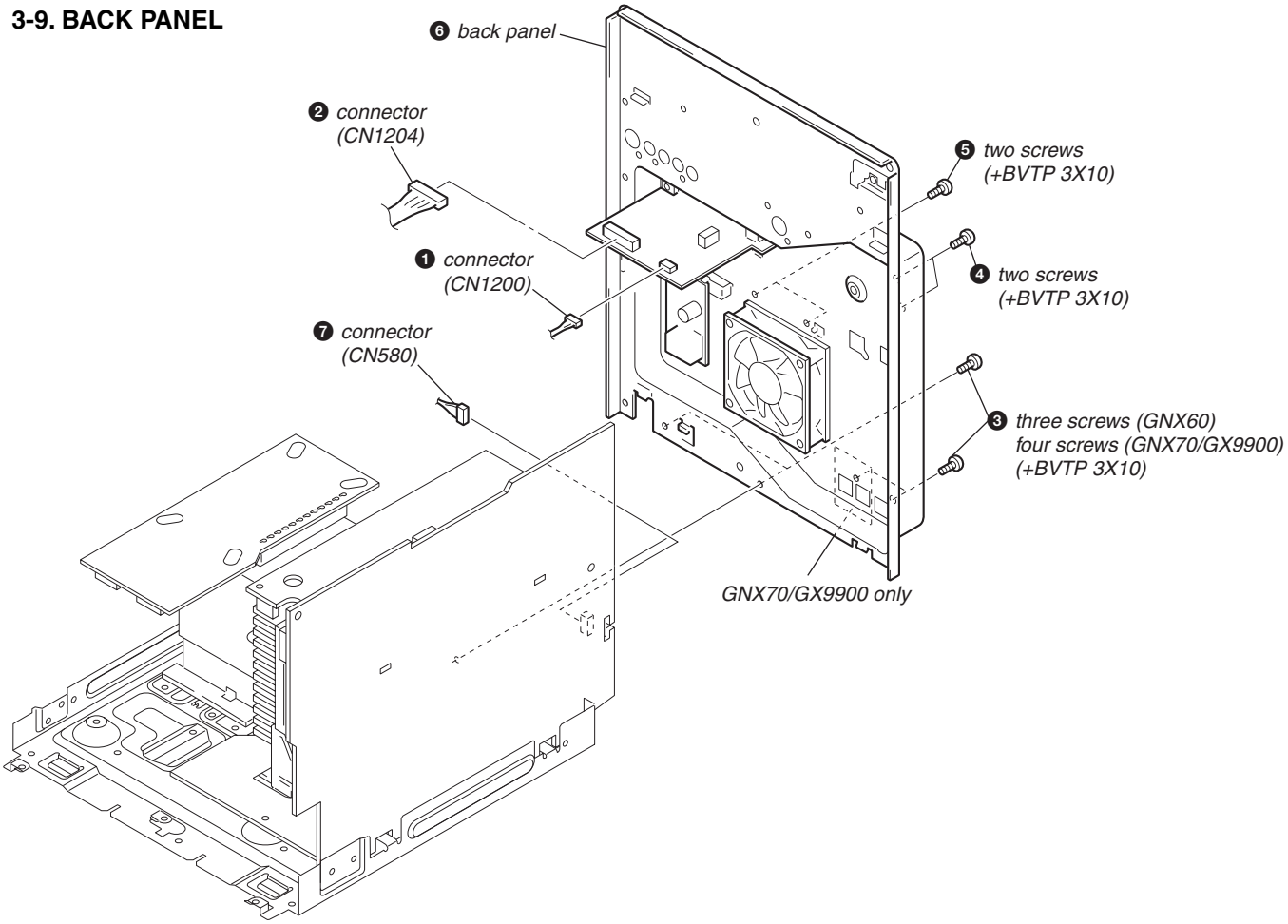

3-10. PRIMARY BOARD

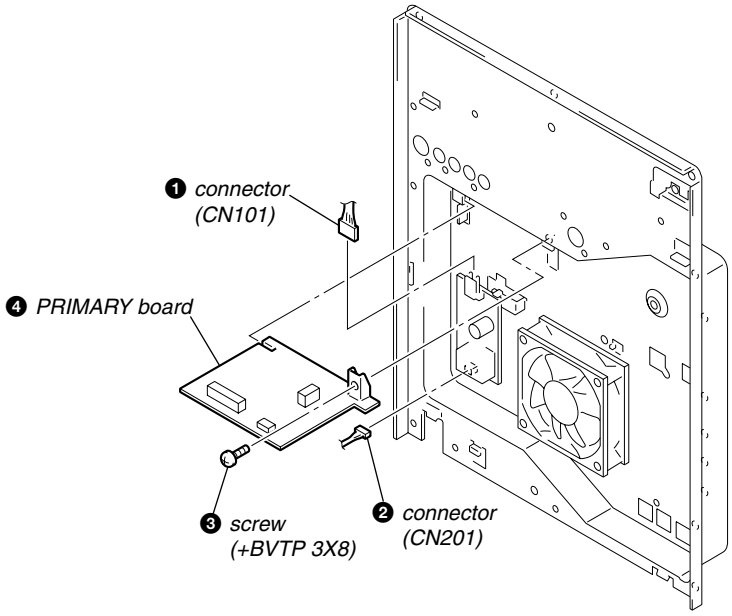

3-11. POWER AMP PC BOARD ASSY, MAIN BOARD

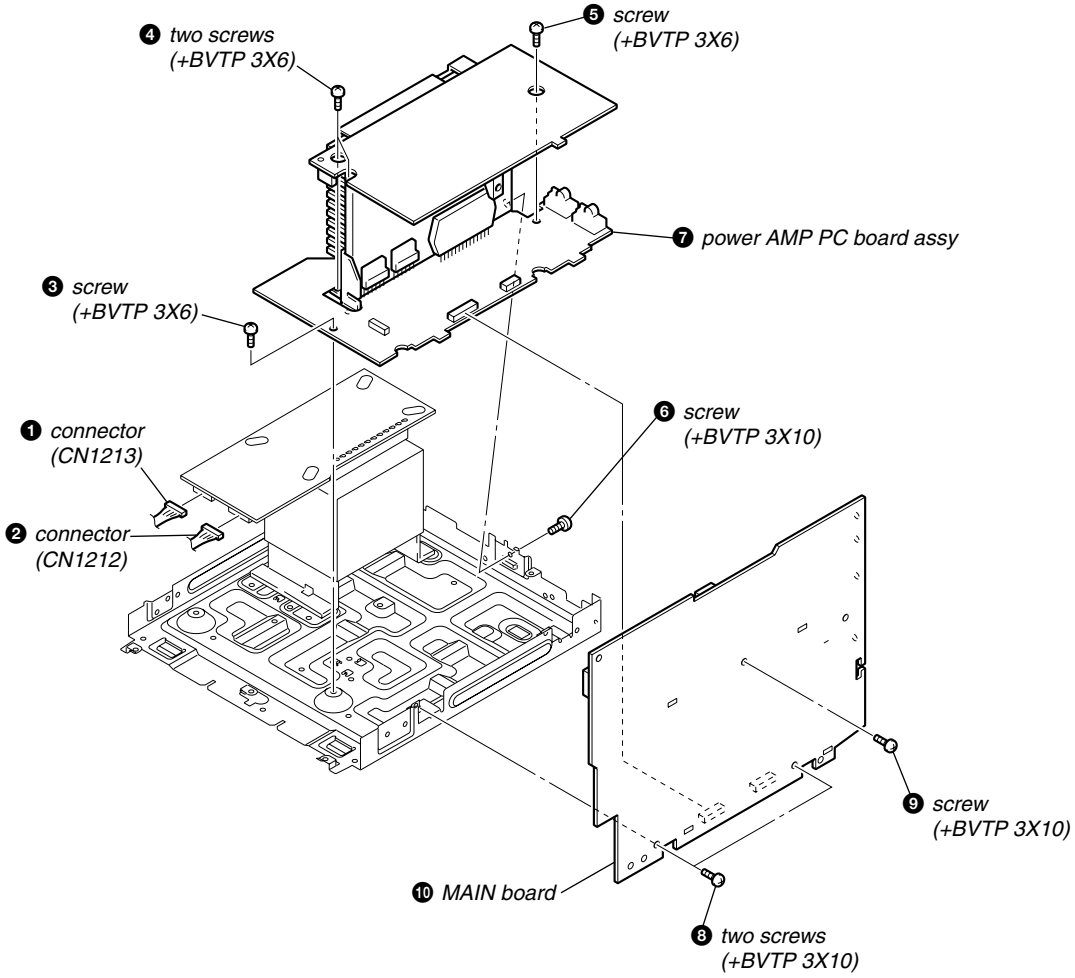

3-12. SURROUND BOARD, PA BOARD

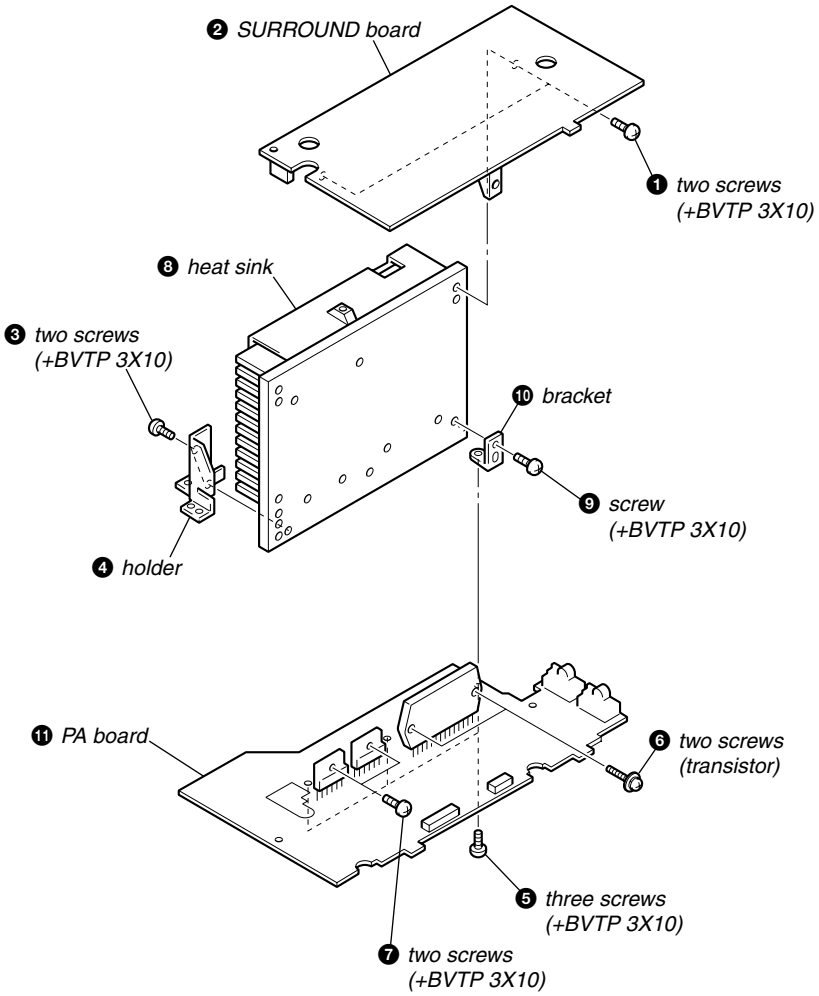

3-13. POWER TRANSFORMER (T1200)

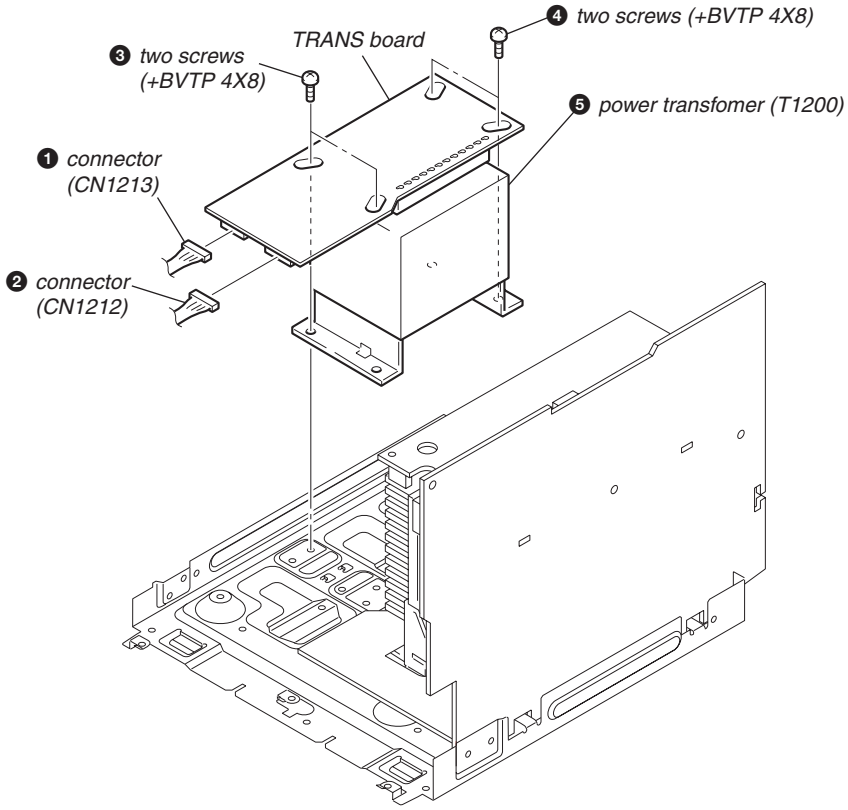

3-14. DRIVER BOARD, SW BOARD

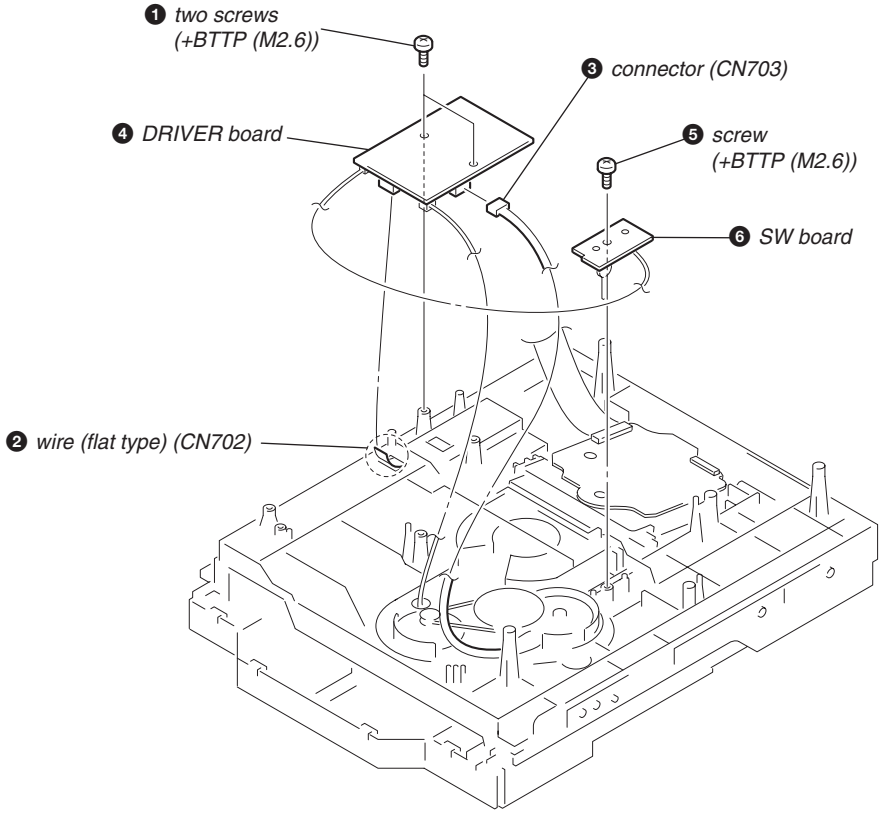

3-15. CD BOARD

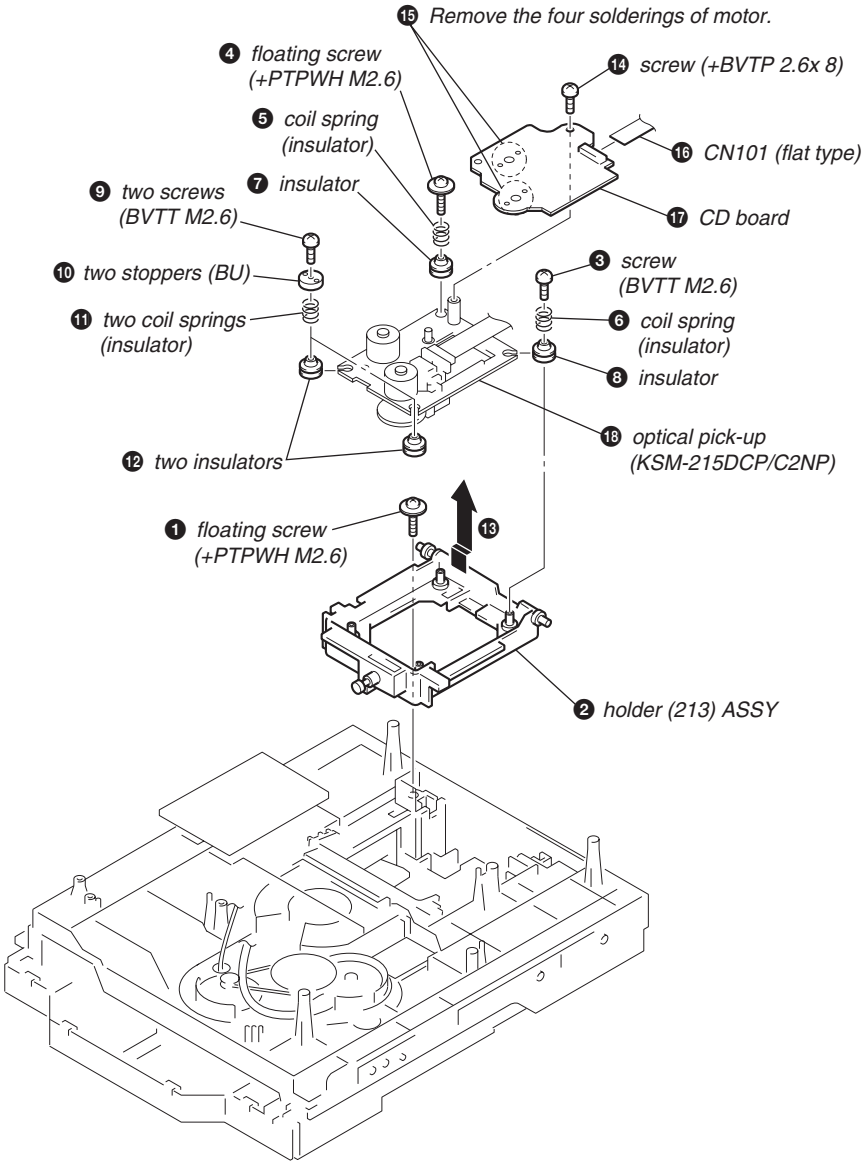

3-16. SENSOR BOARD

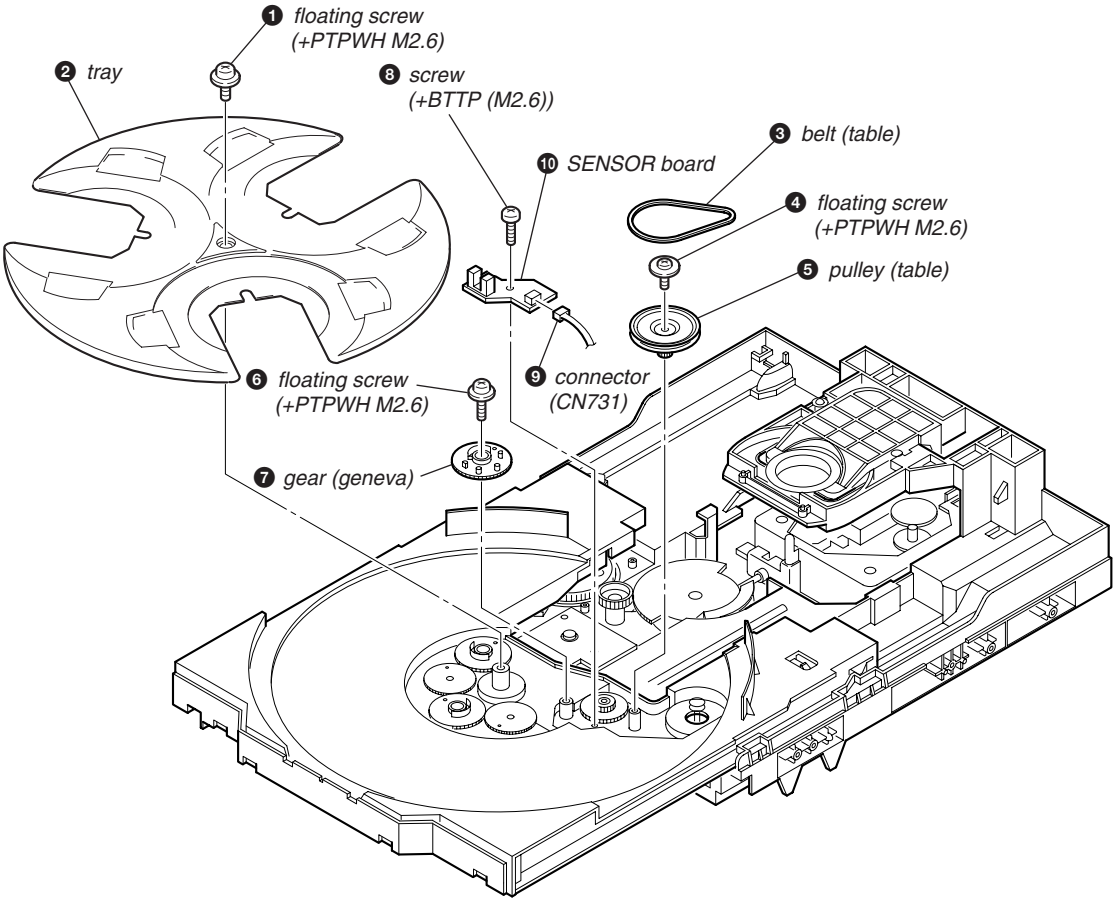

3-17. MOTOR (TB) BOARD

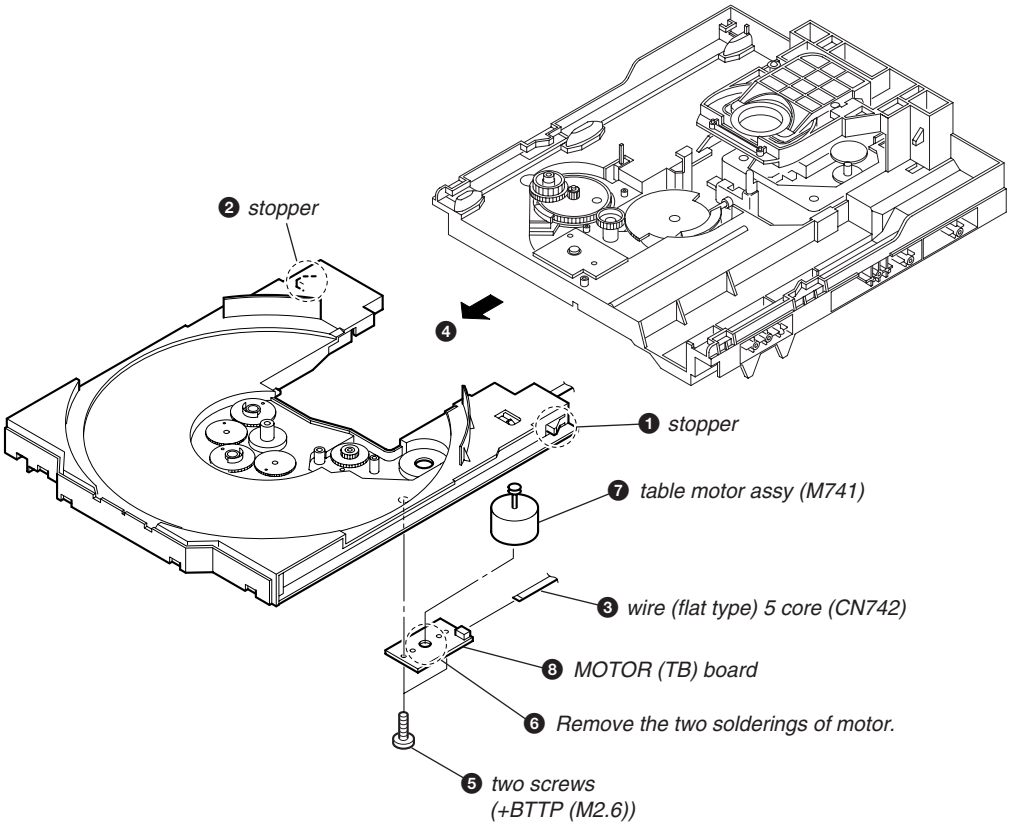

3-18. MOTOR (LD) BOARD

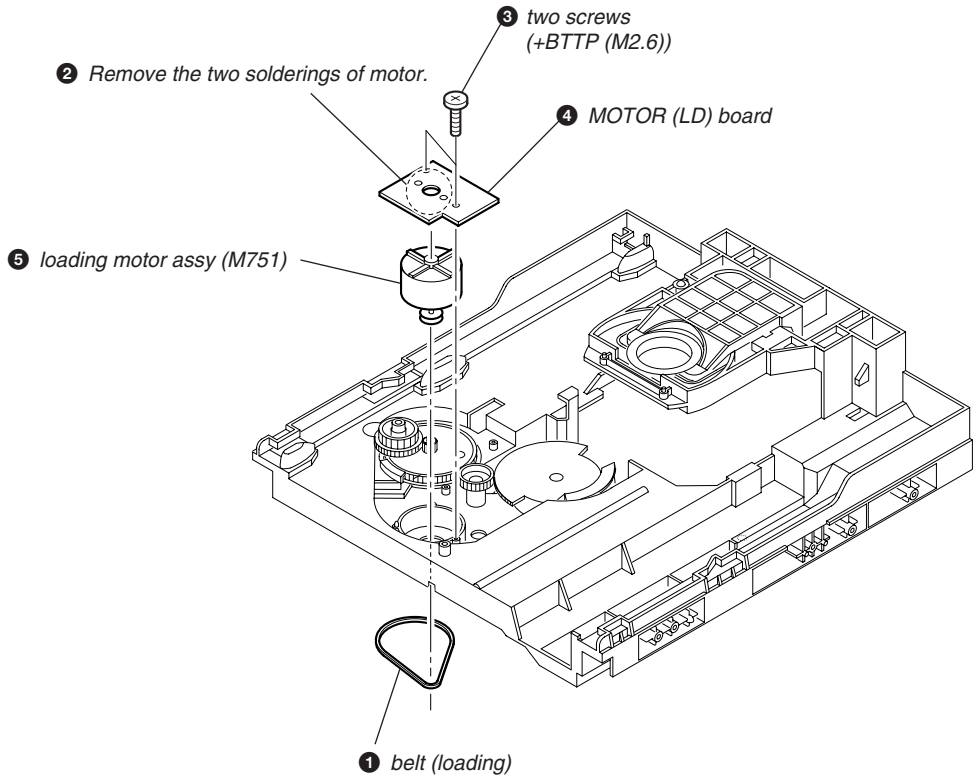

SECTION 4
TEST MODE

[GC TEST MODE]

- This mode is used to check the fluorescent indicator tube, LEDs, keys, MASTER VOLUME jog, OPERATION DIAL jog, AMS jog, destination, software version and VACS level.

Procedure:

1. Press ■ button, ENTER button and DISC 2 button simultaneously.
2. All LEDs and segments in fluorescent indicator tube are lighted up. All LEDs are lighted up in red color. If the system is turned on, the I/⏻ LED is lighted up in green color.
3. When you want to enter the software version display mode, press DISC 1 button. The model and destination are displayed.
4. Each time DISC 1 button is pressed, the display changes from MC version, GC version, SYS version, CD version, CDDM version, CDMA version, CDMB version, BDA version, BDB version, ST version, TC version, TA version and TM version in this order, and returns to the MC version display.
5. When DISC 3 button is pressed while the version numbers are being displayed except model and destination, the date of the software creation appear. When DISC 3 button is pressed again, the display returns to the software version display. When DISC 1 button is pressed while the date of the software creation is being displayed, the date of the software creation is displayed in the same order of software version display.
6. Press DISC 2 button, the key check mode is activated.
7. In the key check mode, the fluorescent indicator tube displays "K 0 J0V0E0 X0".
   Each time a button is pressed, "K" value increases. However, once a button has been pressed, it is no longer taken into account.
   "J" value increases in the manner of 0,1, 2, 3 ... if OPERATION DIAL knob is turned clockwise, or it decreases in the manner of 0, 9, 8, 7 ... if OPERATION DIAL knob is turned counter-clockwise.
   "V" value increases in the manner of 0,1, 2, 3 ... if VOLUME knob is turned clockwise, or it decreases in the manner of 0, 9, 8, 7 ... if VOLUME knob is turned counter-clockwise.
   "E" value increases in the manner of 0,1, 2, 3 ... if ⏮ ⏭ knob is turned clockwise, or it decreases in the manner of 0, 9, 8, 7 ... if ⏮ ⏭ knob is turned counter-clockwise.
8. When DISC 3 button is pressed after all LEDs and segments in fluorescent indicator tube light up, the fluorescent indicator tube displays "VACS A+B APCC". A is VACS level which is triggerd by signal level, B is VACS level which is triggerd by temperature and CC is VACS level which is triggerd by APVACS (Abuse Protection VACS).
   The signal level, which will trigger VACS A is shown in the center area of fluorescent indicator tube.
9. When EX-CHANGE/DISC SKIP button is pressed after all LEDs and segments in fluorescent indicator tube light up, alternate segments in fluorescent indicator tube would light up. If you press EX-CHANGE/DISC SKIP button again, another half of alternate segments in fluorescent indicator tube would light up. Pressing EX-CHANGE/DISC SKIP button again would cause all segments lights up.
10. To release this mode, press three buttons in the same manner as step 1, or disconnect the power cord.

[MC TEST MODE]

- This mode is used to check operations of the respective sections of Amplifier, Tuner, and Tape.

Procedure:

* To enter MC Test Mode

1. Press ■ button, ENTER button and DISC 3 button simultaneously.
2. The CD ring indicators, TAPE A and TAPE B indicators flash on the fluorescent indicator tube. The function is changed to VIDEO.

* Check of Amplifier

1. Press EQ BAND button repeatedly until a message "GEQ MAX" appears on the fluorescent indicator tube. GEQ increases to its maximum.
2. Press EQ BAND button repeatedly until a message "GEQ MIN" appears on the fluorescent indicator tube. GEQ decreases to its minimum.
3. Press EQ BAND button repeatedly until a message "GEQ FLAT" appears on the fluorescent indicator tube. GEQ set to flat.
4. When the MASTER VOLUME knob is turned clockwise even slightly, the sound volume increases to its maximum and a message "VOLUME MAX" appears on the fluorescent indicator tube.
5. When the MASTER VOLUME knob is turned counter-clockwise even slightly, the sound volume decreases to its minimum and a message "VOLUME MIN" appears on the fluorescent indicator tub.

* Tape function

1. When a tape is inserted in Deck B and recording is started, the function is changed to VIDEO automatically. When CD SYNC button is pressed during recording in function, ALC (Automatic Level Control) is turned on.
2. During recording, turn ◀◀ ▶▶ knob to counter clockwise rotation will change the function to TAPE B and rewind the tape in deck B until the recording start position and playback of the tape in deck B is started. If the REC PAUSE/ START button is pressed for a pause and pressed again to resume recording during recording time, when the tape in deck B is rewind, the tape in deck B will be rewind until the position where the pause is applied.

* To release MC Test mode.

1. To release this mode, press I/⏻ button.
2. The cold reset is enforced at the same time.

[COLD RESET]

- The cold reset clears all data including preset data stored in the RAM to initial conditions. Execute this mode when returning the set to the customer.

Procedure:

1. Press ■ button, ENTER button, and I/⏻ button simultaneously.
2. The fluorescent indicator tube becomes blank for a while, and the set is reset.

[VACS ON/OFF]

- This mode is used to switch ON and OFF the VACS (Variable Attenuation Control System).

Procedure:

1. Press [I/⏻] button to turn the set ON.
2. Press [■] button and [ILLUMINATION] button simultaneously. The message "VACS OFF" or "VACS ON" appears on the fluorescent indicator tube.

[TUNER STEP CHANGE]

- The step interval of AM channels can be toggled between 9 kHz and 10 kHz.

Procedure:

1. Press [I/⏻] button to turn the set ON.
2. Press [TUNER/BAND] button repeatedly to select the "AM".
3. Press [I/⏻] button to turn the set OFF.
4. Press [ENTER] button and [I/⏻] button simultaneously. The system will turn ON automatically. The message "AM 9k STEP" or AM 10k STEP" appears on the fluorescent indicator tube and thus the channel step is changed.

[CD SERVICE MODE]

- This mode let you move the CD sled motor freely. Use this mode when you want to clean the optical pick-up.

Procedure:

1. Press [I/⏻] button to turn the set ON.
2. Select CD function.
3. Press [■], [ENTER] button, and [⏏ OPEN/CLOSE] button simultaneously.
4. The CD service mode is activated. The message "SERVICE MODE" appears.
5. With the CD in stop status, turn [◀◀ ▶▶] knob to clockwise rotation to move the optical pick-up to outside track, or turn [◀◀ ▶▶] knob to counterclockwise rotation to move to inside track. The message "SLED OUT" or "SLED IN" appears on the fluorescent indicator tube.
6. To turn on or off the laser, press [DIRECTION] button. The message "LASER ON" or "LASER OFF" appears on the fluorescent indicator tube.
7. To release this mode, press [I/⏻] button.

[AGING MODE]

This mode can be used for operation check of CD section.

- If an error occurs, the aging operation would stops and the status is displayed.
- If there are no error occurs, the aging operation would continues repeatedly.

Procedure:

1. Press [I/⏻] button to turn the set ON
2. Select CD function.
3. Load three discs on the disc tray.
4. Press [PLAY MODE] button repeatedly to select the "ALL DISCS" mode, and press the [REPEAT] button repeatedly to select "REPEAT OFF" mode.
5. Press [■] button, [ENTER] button, and [EX-CHANGE/DISC SKIP] button simultaneously.
6. Aging operation is started.
7. To release this mode, press [I/⏻] button or disconnect the power cord to turn the power OFF.

Aging mode sequence:

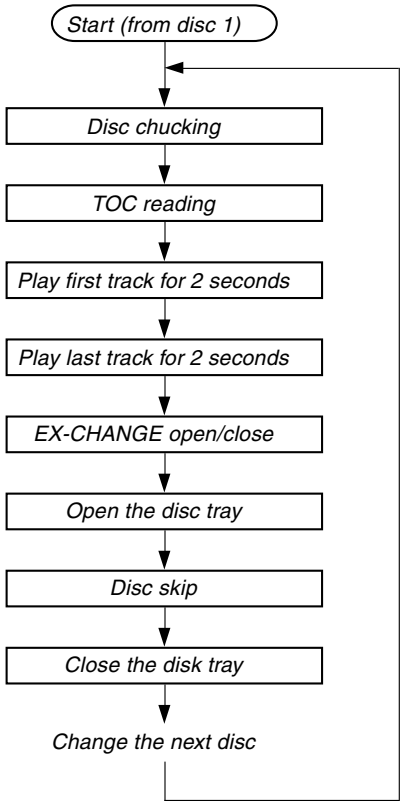

• Display when an error occurred (CD Error Code Mode)

Procedure:

1. Press ■ button, ENTER button and DISC 1 button simultaneously to enter the error code display mode.
2. The fluorescent indicator tube displays the number of total error.
3. Each time ◀◀ ▶▶ knob is rotated, display change as below.

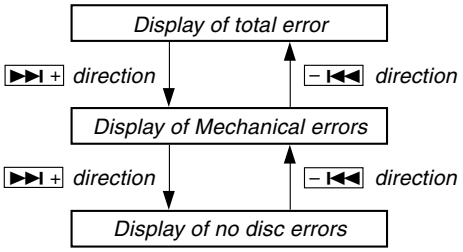

4. To clear the error record, operate the cold reset. (Refer to the "COLD RESET")
5. To release this mode, press the I/⏻ button or disconnect the power cord to turn the power OFF.

1) Display of total error

Display

Em**Ed**

EM**: The number of mechanical errors.
ED**: The number of no disc errors after chucking the disc.

2) Display of mechanical errors

Display

M*$$%%&&##00

M*: The number of mechanical error ("00" is latest one)
(Rotate I◀◀ ▶▶I knob in the direction of either to display next error)
$$: Not used
%%: Loading related error (Second figure is not used)
- D: Stop by the problem other than mechanical problem while closing.
- E: Stop by the problem other than mechanical problem while opening.
- C: Stop by the problem other than mechanical problem while chucking up.
- F: Stop by the problem other than mechanical problem while chucking down.

&&: Emerging error
- 01: Stop while chucking up.
- 02: Stop while chucking up.
- 03: Time-out of EX-CHANGE open.
- 05: Time-out of EX-CHANGE close.

##: Not used

3) Display of no disc errors

Display

D*$$%%&&##00

D*: The number of mechanical error ("00" is latest one)
(Rotate I◀◀ ▶▶I knob in the direction of either to display next error)
$$: Error type
- 01: Focus error
- 02: GFS error
- 03: Setup error

%%: Not used
&&:
- 00: No disc judgment without chucking retry.
- 01: No disc judgment after chucking retry.

##: The state when judged as no disc
- 01: Stop
- 02: Setup
- 03: TOC reading
- 04: Access
- 05: Playback
- 06: Pause
- 07: Manual search (Play)
- 08: Manual search (Pause)

[CD REPEAT 5 LIMIT OFF MODE]

- The number of repeat for CD playback is 5 times when the repeat mode is "REPEAT ALL". This mode enables CD to repeat playback for limitless times.

Procedure:

1. Press I/⏻ button to turn the set ON.
2. Select CD function.
3. Press ■ button, CD button and DISC 1 button simultaneously to enter the CD repeat 5 limit off mode and the message "LIMIT OFF" appears on the fluorescent indicator tube .
4. To release this mode, operate the cold reset. (Refer to the " COLD RESET")

[CD SHIP MODE (WITH MEMORY CLEAR)]

- This mode moves the optical pick-up to the position durable to vibration and clears all data including preset data stored in the RAM to initial conditions. Use this mode when returning the set to the customer after repair.

Procedure:

1. Press I/⏻ button to turn the set ON.
2. Select CD function.
3. Press ■ button, CD button and I/⏻ button simultaneously. The set will power off automatically.
4. After the "STANDBY" blinking display finish, a message "LOCK" appears on the fluorescent indicator tube and the CD ship mode is set.

[CD SHIP MODE (WITHOUT MEMORY CLEAR)]

- This mode moves the optical pick-up to the position durable to vibration. Use this mode when returning the set to the customer after repair.

Procedure:

1. Press I/⏻ button to turn the set ON.
2. Select CD function.
3. Press CD button and I/⏻ button simultaneously. The set will power off automatically.
4. After the "STANDBY" blinking display finish, the message "LOCK" appears on the fluorescent indicator tube and the CD ship mode is set.

[CD POWER MANAGE]

- This mode let you switch on or off, the power supply to the BU during TUNER function.
- When CD POWER is set to OFF, the power supply to the BU is cut off during TUNER function. It will increase the time taken to access CD when function change from TUNER to CD but it will improve tuner reception.
- When CD POWER is set to ON, the power supply to the BU is not cut off during TUNER function. It will reduce the time taken to access CD when function change from TUNER to CD but it will decrease tuner reception performance.

Procedure:

1. Press I/⏻ button to turn the set ON.
2. Select CD function.
3. Press I/⏻ button to turn the set OFF.
4. Press ■ button and I/⏻ button simultaneously. The set will power on automatically.
5. The message "CD POWER ON" or "CD POWER OFF" appears on the fluorescent indicator tube.

[CD TRAY LOCK MODE]

- This mode let you lock the disc trays. When this mode is activated, the disc tray will not open when ⏏ OPEN/CLOSE button or EX-CHANGE/DISC SKIP button is pressed. The message "LOCKED" appears on the fluorescent indicator tube.

Procedure:

1. Press I/⏻ button to turn the set ON.
2. Select CD function.
3. Press ■ button and ⏏ OPEN/CLOSE button simultaneously and hold down until "LOCKED" or "UNLOCKED" appears on the fluorescent indicator tube (around 5 seconds).

[VIDEO/MD SWITCHING]

- This mode let you switch from VIDEO to MD and vice-versa.

Procedure:

1. Press I/⏻ button to turn the set ON.
2. Select VIDEO function.
3. Press VIDEO/MD button and I/⏻ button simultaneously. The function will change to MD. Press the same buttons again to change from MD to VIDEO.

[REMOTE COMMANDER DISABLE MODE]

- This mode let you disable the remote commander reception. When this mode is activated, the set will not response if the button on the remote commander is pressed. The message "RemoteDisable" will be displayed on the fluorescent indicator tube. Use this mode during aging to avoid disturbance.
- Procedure:
  1. Press ■ button, GROOVE button and DISC 2 button simultaneously.
     The message "RemoteDisable" appears on the fluorescent indicator tube. To enable the remote commander reception, press the same buttons again.
     The message "RemoteEnable" appears on the fluorescent indicator tube.

SECTION 5
MECHANICAL ADJUSTMENTS

Precaution

1. Clean the following parts with a denatured alcohol-moistened swab:
   record/playback heads pinch rollers
   erase head rubber belts
   capstan idlers
2. Demagnetize the record/playback head with a head demagnetizer.
3. Do not use a magnetized screwdriver for the adjustments.
4. After the adjustments, apply suitable locking compound to the parts adjusted.
5. The adjustments should be performed with the rated power supply voltage unless otherwise noted.

Torque Measurement

Mode	Torque meter	Meter reading
FWD	CQ-102C	3.06 N • m to 6.96 N • m 31 to 71 g • cm (0.43 – 0.98 oz • inch)
FWD back tension	CQ-102C	0.19 N • m to 0.58 N • m 2 to 6 g • cm (0.02 – 0.08 oz • inch)
REV	CQ-102RC	3.06 N • m to 6.96 N • m 31 to 71 g • cm (0.43 – 0.98 oz • inch)
REV back tension	CQ-102RC	0.19 N • m to 0.58 N • m 2 to 6 g • cm (0.02 – 0.08 oz • inch)
FF/REW	CQ-201B	6.96 N • m to 14.02 N • m 71 to 143 g • cm (0.98 – 1.99 oz • inch)
FWD tension	CQ-403A	9.80 N • m 100 g or more (3.53 oz or more)
REV tension	CQ-403R	9.80 N • m 100 g or more (3.53 oz or more)

SECTION 6
ELECTRICAL ADJUSTMENTS

DECK SECTION 0 dB=0.775 V

1. Demagnetize the record/playback head with a head demagnetizer.
2. Do not use a magnetized screwdriver for the adjustments.
3. After the adjustments, apply suitable locking compound to the parts adjust.
4. The adjustments should be performed with the rated power supply voltage unless otherwise noted.
5. The adjustments should be performed in the order given in this service manual. (As a general rule, playback circuit adjustment should be completed before performing recording circuit adjustment.)
6. The adjustments should be performed for both L-CH and R-CH.
7. Switches and controls should be set as follows unless otherwise specified.

- Test Tape

Tape	Signal	Used for
P-4-A100	10 kHz, –10 dB	Azimuth Adjustment

RECORD/PLAYBACK HEAD AZIMUTH ADJUST-MENT

DECK A **DECK B**

Note: Perform this adjustments for both decks

Procedure:

1. Mode: Playback

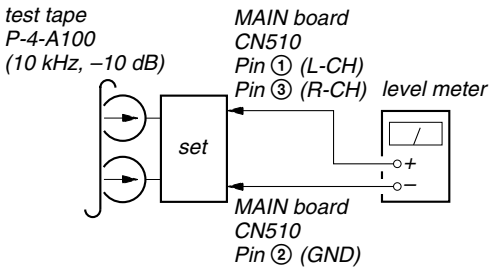

2. Turn the adjustment screw and check output peaks. If the peaks do not match for L-CH and R-CH, turn the adjustment screw so that outputs match within 1dB of peak.

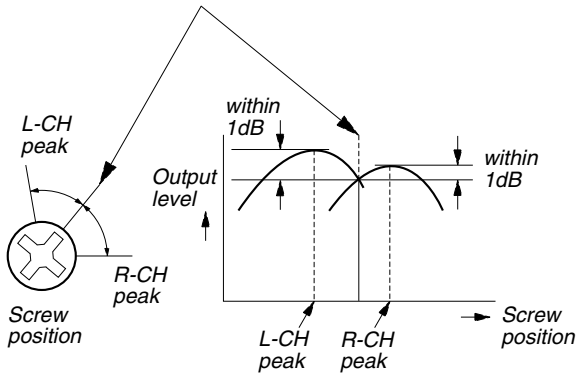

3. Mode: Playback

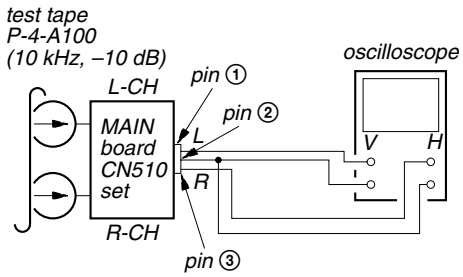

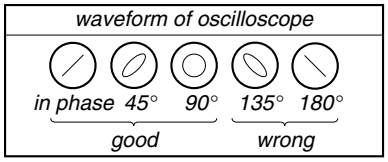

4. After the adjustments, apply suitable locking compound to the pats adjusted.

Adjustment Location: Playback Head (Deck A).
Record/Playback/Erase Head (Deck B).

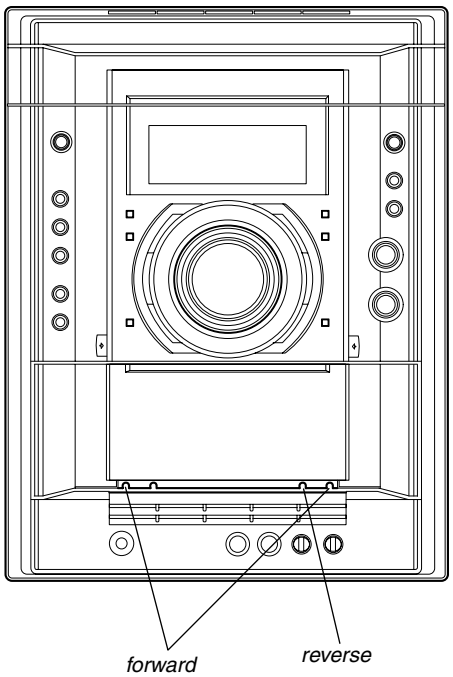

CD SECTION

Note:

1. CD Block is basically designed to operate without adjustment. Therefore, check each item in order given.
2. Use YEDS-18 disc (3-702-101-01) unless otherwise indicated.
3. Use an oscilloscope with more than 10MΩ impedance.
4. Clean the object lens by an applicator with neutral detergent when the signal level is low than specified value with the following checks.

S-curve Check

Connection:

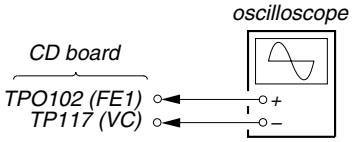

Procedure:

1. Connect an oscilloscope to test point TPO102 (FE1) and TP 117(VC) on the CD board.
2. Turn the power on.
3. Put the disc (YEDS-18) in and turned power switch on again and actuate the focus search. (actuate the focus search when disc table is moving in and out)
4. Check the oscilloscope waveform (S-curve) is symmetrical between A and B. And confirm peak to peak level within 2.4 ± 1 Vp-p.

S-curve waveform

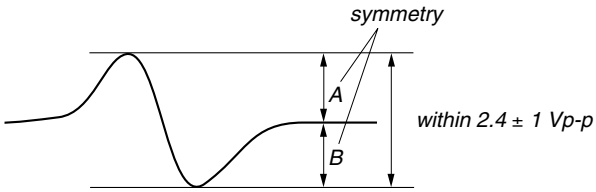

Note:

- Try to measure several times to make sure than the ratio of A : B or B : A is more than 10 : 7.
- Take sweep time as long as possible and light up the brightness to obtain best waveform.

Checking Location: CD board (SIDE B)
(See page 24.)

RFAC Level Check

Connection:

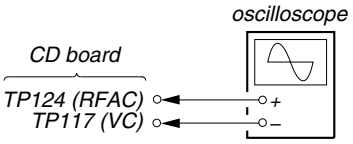

Procedure:

1. Connect an oscilloscope to test point TP124 (RFAC) and TP 117(VC) on the CD board.
2. Turn the power on.
3. Put the disc (YEDS-18) in to playback the number five track.
4. Confirm that oscilloscope waveform is clear and check RFAC signal level is correct or not.

Note: A clear RFAC signal waveform means that the shape "◊" can be clearly distinguished at the center of the waveform.

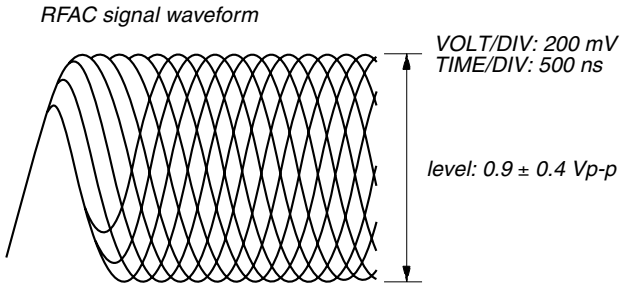

Checking Location: CD board (SIDE B)
(See page 24.)

E-F Balance Check

Connection:

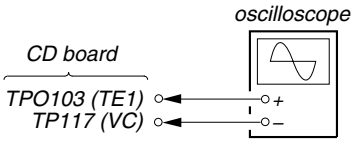

Procedure:

1. Connect an oscilloscpe to test point TPO103 (TE1) and TP117 (VC) on the CD board.
2. Turn the power on.
3. Select the function "CD".
4. Press three buttons of [ENTER], [▶▶], and [SURRUUND MODE] simultaneously to set the CD service mode.
5. Put the disc (YEDS-18) in to playback the number five track.
6. Press the [⏮] button. The message "TRAVERSE" is displayed. (The tracking servo and the sledding servo are turned OFF)
7. Check the level B of the oscilliscope's waveform and the A (DC voltage) of the center of the Traverse waveform.
   Confirm the following :
   A/B x 100 = less than ± 22%

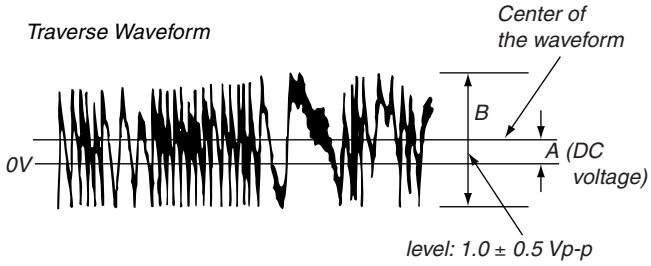

8. Press the [⏮] button. The message "TRAVERSE" is displayed. (The tracking servo and sledding servo are turned ON)
   Confirm the C (DC voltage) is almost equal to the A (DC voltage) is step 5.
9. To exit from this mode, perform as follows.
   1) Move the optical pick-up to the most inside track.
   2) Press three buttons of [■], [CLEAR], and [DISPLAY] simultaneously. (cold reset)

Notes:

- Always move the optical pick-up to most inside track when exiting from this mode. Otherwise, a disc will not be unloaded.
- Do not run the sled motor excessively, otherwise the gear can be chipped.

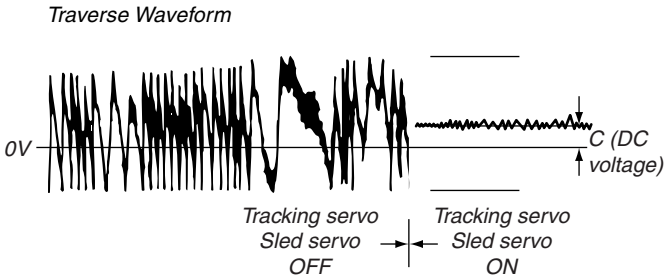

Checking Location: CD board (SIDE B) (See page 24.)

Checking Location:

– CD BOARD (SIDE B) –

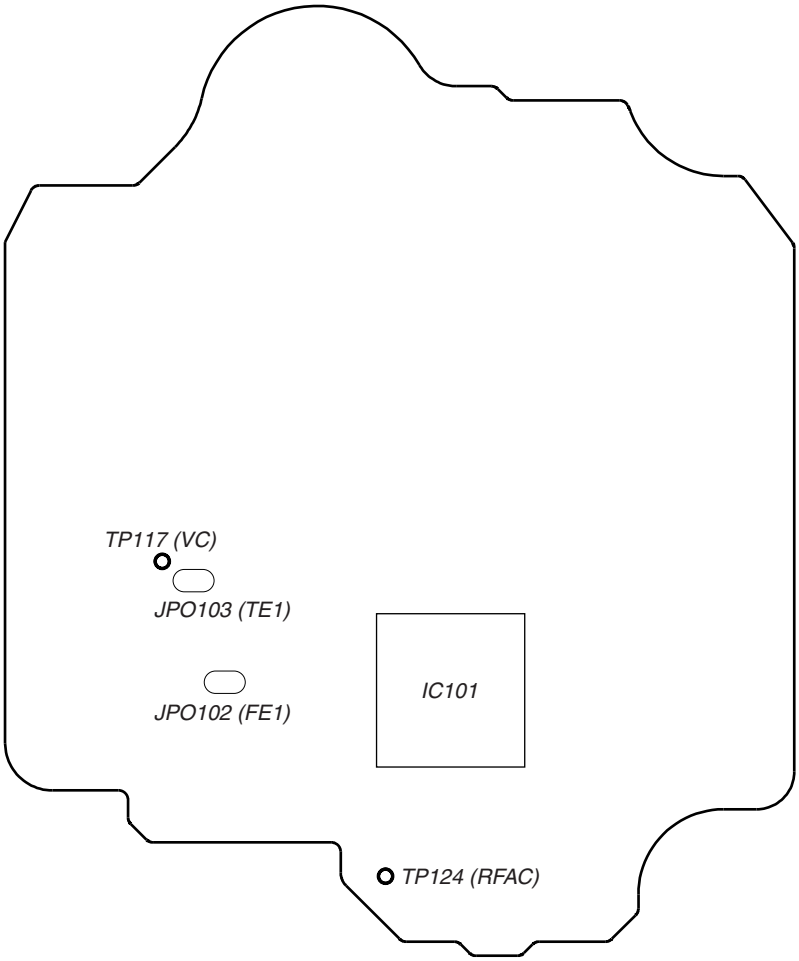

SECTION 7
DIAGRAMS

For schematic diagrams.
Note:
- All capacitors are in μF unless otherwise noted. (p: pF) 50 V or less are not indicated except for electrolytics and tantalums.
- All resistors are in Ω and ¼ W or less unless otherwise specified.
- % : indicates tolerance.
- Δ : internal component.
- : nonflammable resistor.
- : fusible resistor.

Note: The components identified by mark ⚠ or dotted line with mark ! are critical for safety.
Replace only with part number specified.

- : panel designation.
- : B+ Line.
- : B– Line.
- : adjustment for repair.
- Voltages and waveforms are dc with respect to ground under no-signal conditions.
  CD board
  no mark: CD PLAY
  Other board
  no mark: TUNER (FM/AM)
  ( ) : CD PLAY
  < > : TAPE PLAY
  [ ] : TAPE REC
  * : Impossible to measure
- Voltages are taken with a VOM (Input impedance 10 MΩ). Voltage variations may be noted due to normal production tolerances.
- Waveforms are taken with a oscilloscope. Voltage variations may be noted due to normal production tolerances.
- Circled numbers refer to waveforms.
- Signal path.
  : TUNER (FM/AM)
  : TAPE PLAY (DECK A)
  : TAPE PLAY (DECK B)
  : RECORD
  : CD PLAY
  : MIC INPUT

- Abbreviation
  AR : Argentine model
  AUS : Australian model
  E2 : 120V AC Area in E model
  E3 : 240V AC Area in E model
  E51 : Chilean and Peruvian model

Note on Printed Wiring Boards:
Note:
- : parts extracted from the component side.
- : Pattern from the side which enables seeing.
  (The other layers' patterns are not indicated.)

Caution:	
Parts face side: (Side A)	Parts on the parts face side seen from the parts face are indicated.
Pattern face side: (Side B)	Parts on the pattern face side seen from the pattern face are indicated.

- Indication of transistor.

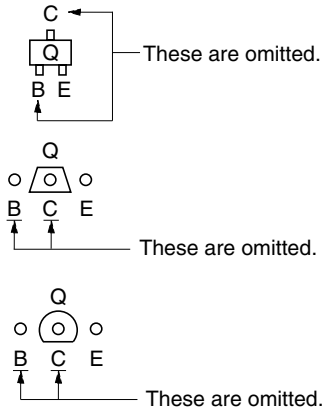

- Abbreviation
  AR : Argentine model
  AUS : Australian model
  E2 : 120V AC Area in E model
  E3 : 240V AC Area in E model
  E51 : Chilean and Peruvian model

7-1. CIRCUIT BOARD LOCATION

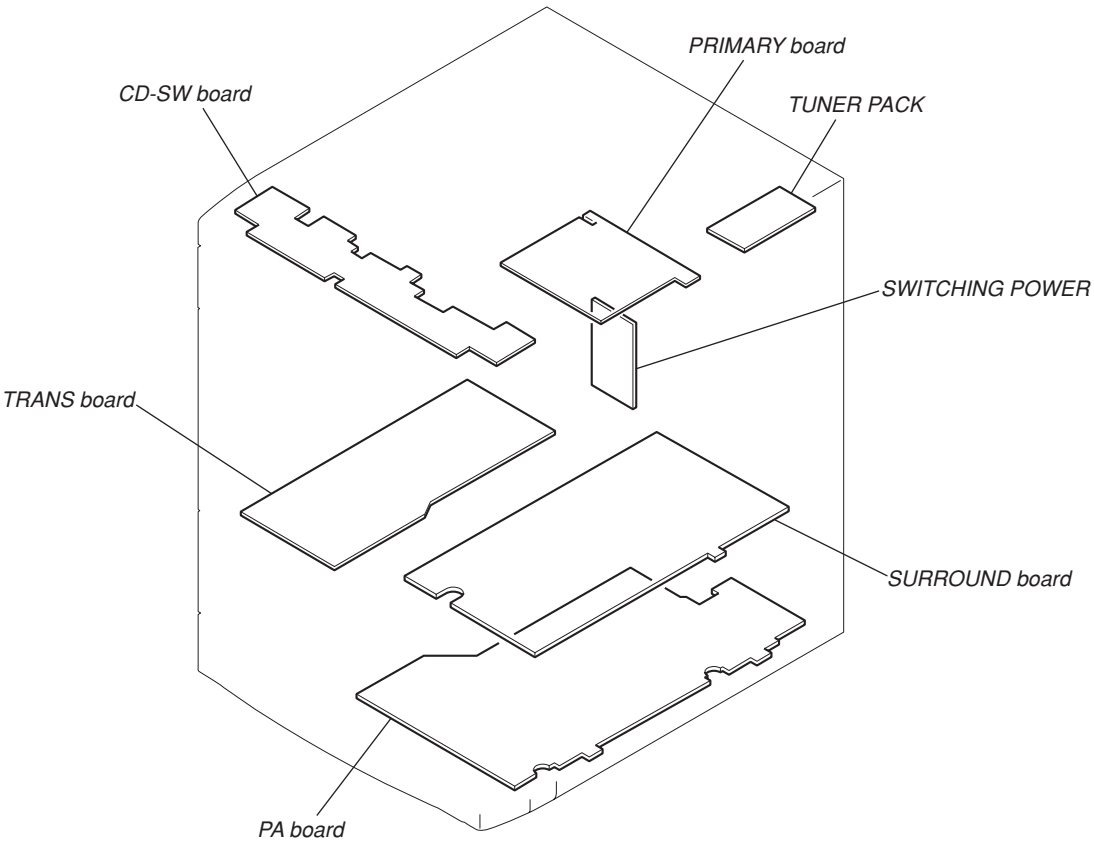

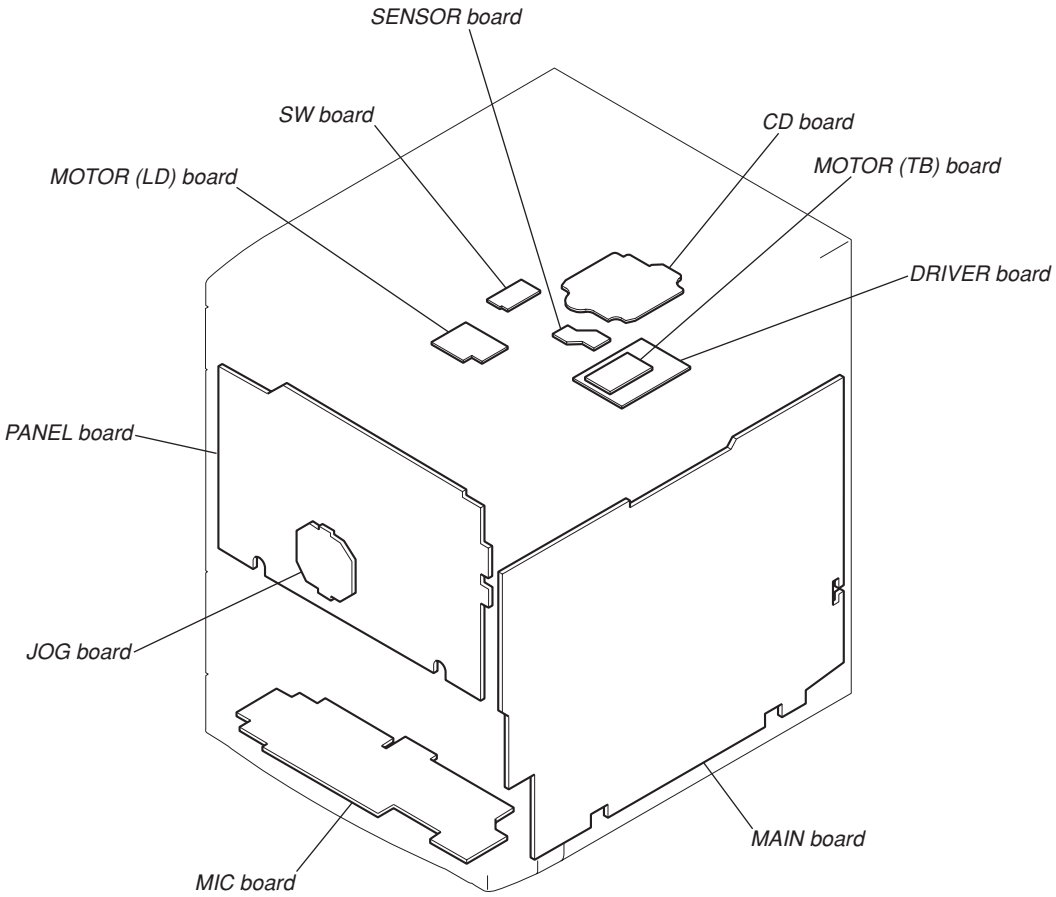

7-2. BLOCK DIAGRAM – CD SECTION –

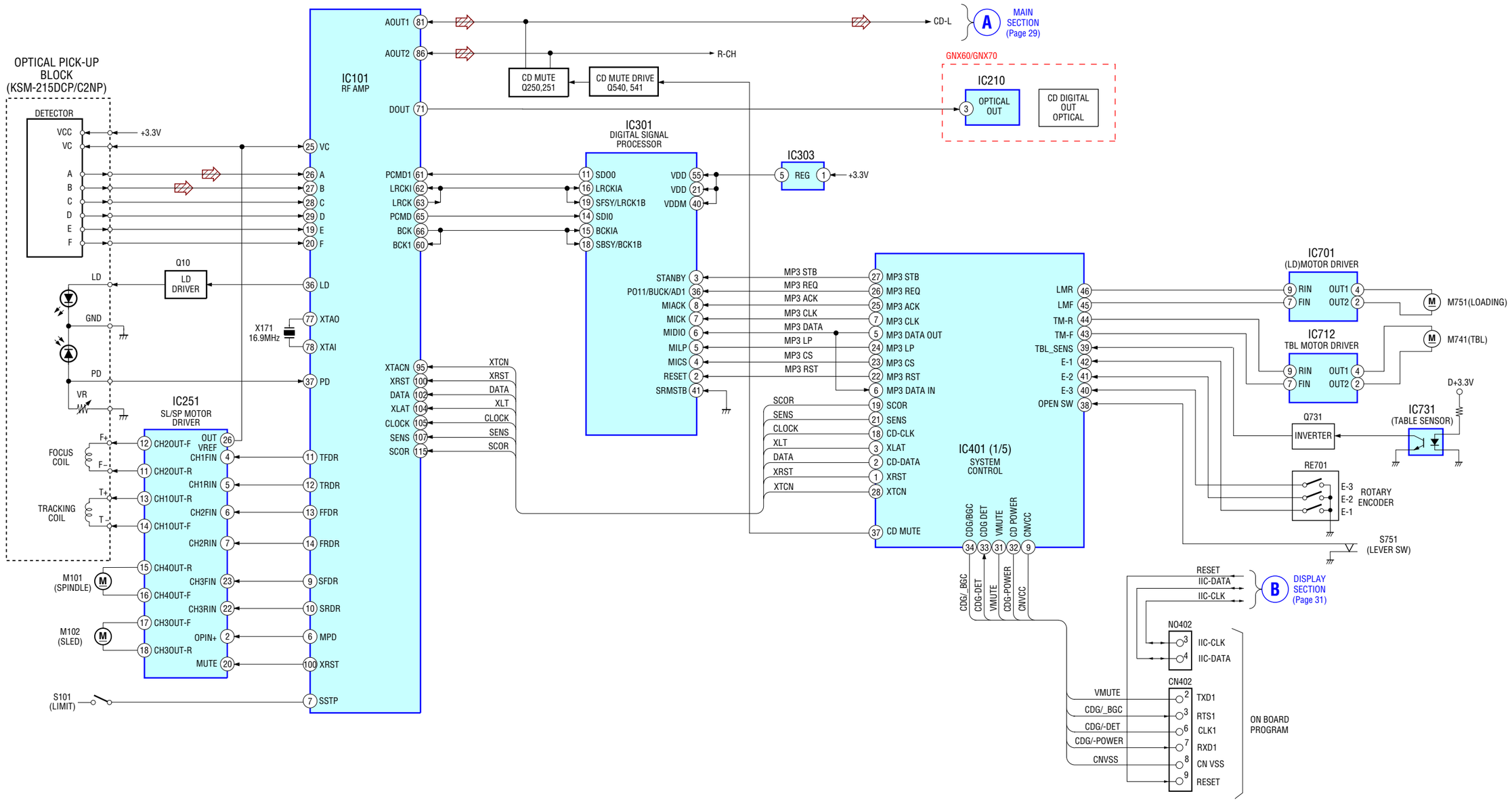

- R-CH is omitted due to same as L-CH.
- SIGNAL PATH
  : CD

7-3. BLOCK DIAGRAM – TAPE SECTION –

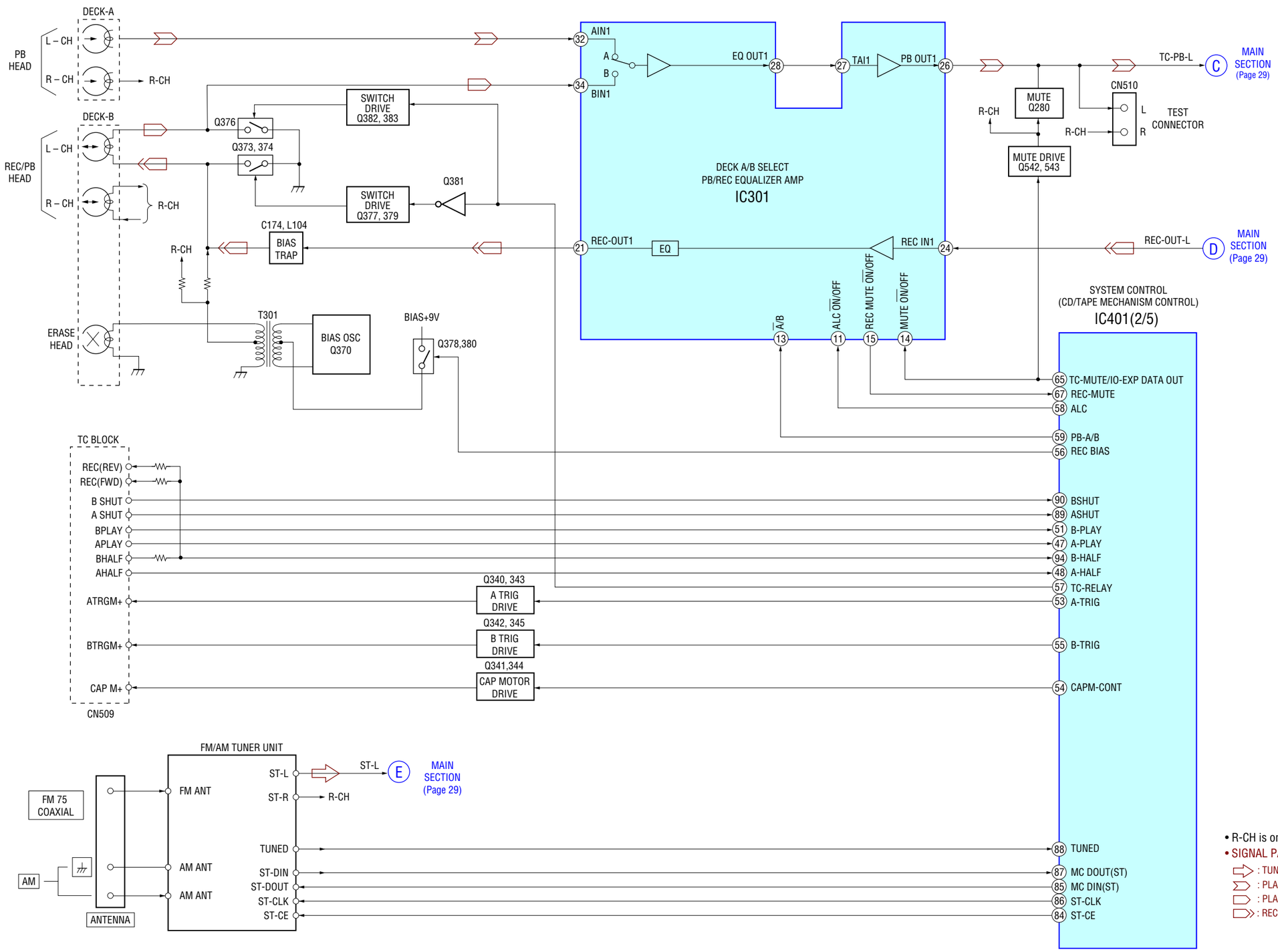

- R-CH is omitted due to same as L-CH.
- SIGNAL PATH
  - : TUNER (FM/AM)
  - : PLAYBACK (DECK A)
  - : PLAYBACK (DECK B)
  - : RECORD

7-4. BLOCK DIAGRAM – MAIN SECTION –

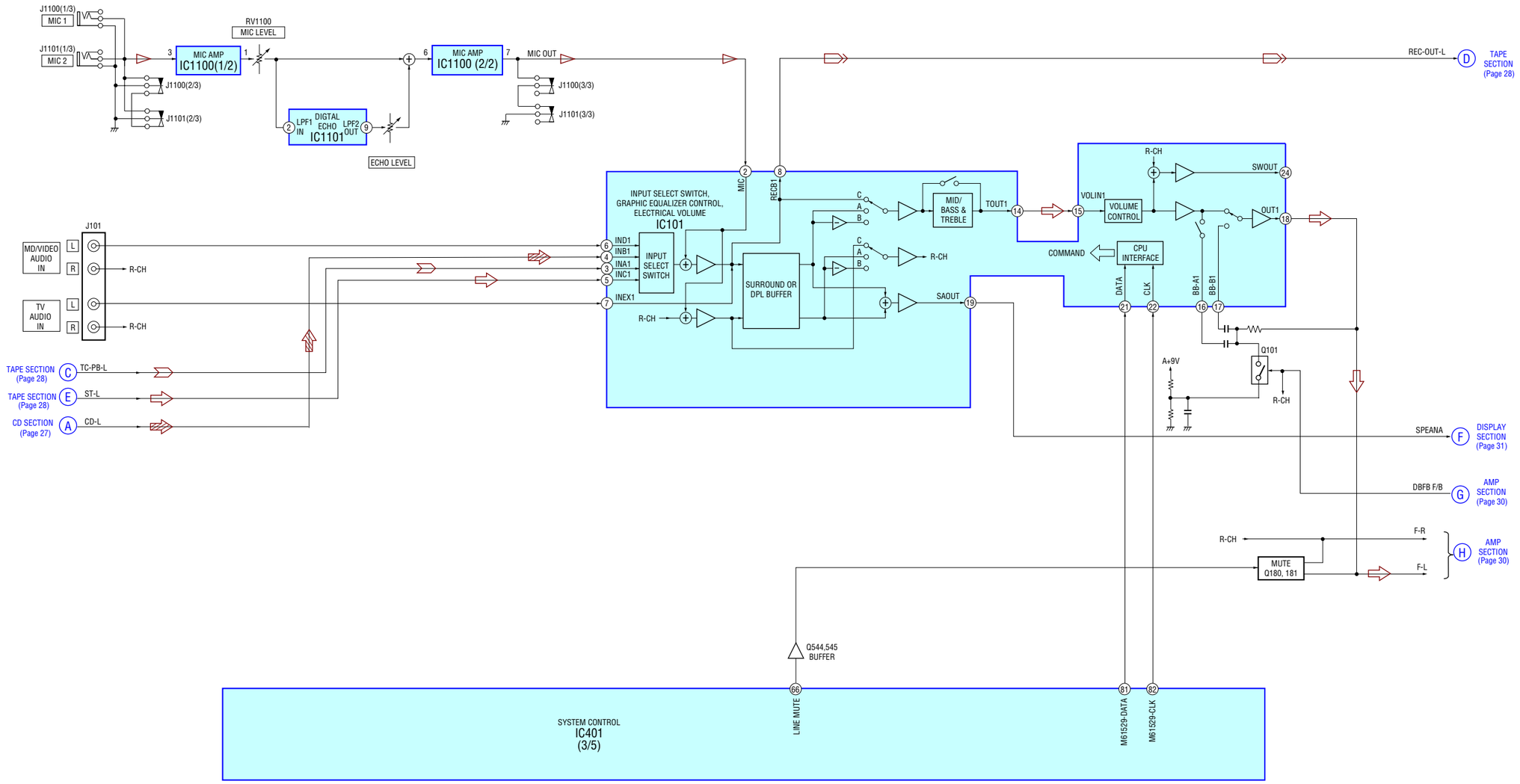

- R-CH is omitted due to same as L-CH.
- SIGNAL PATH
  - : TUNER (FM/AM)
  - : CD
  - : TAPE PLAY
  - : RECORD
  - : MIC INPUT

7-5. BLOCK DIAGRAM – AMP SECTION –

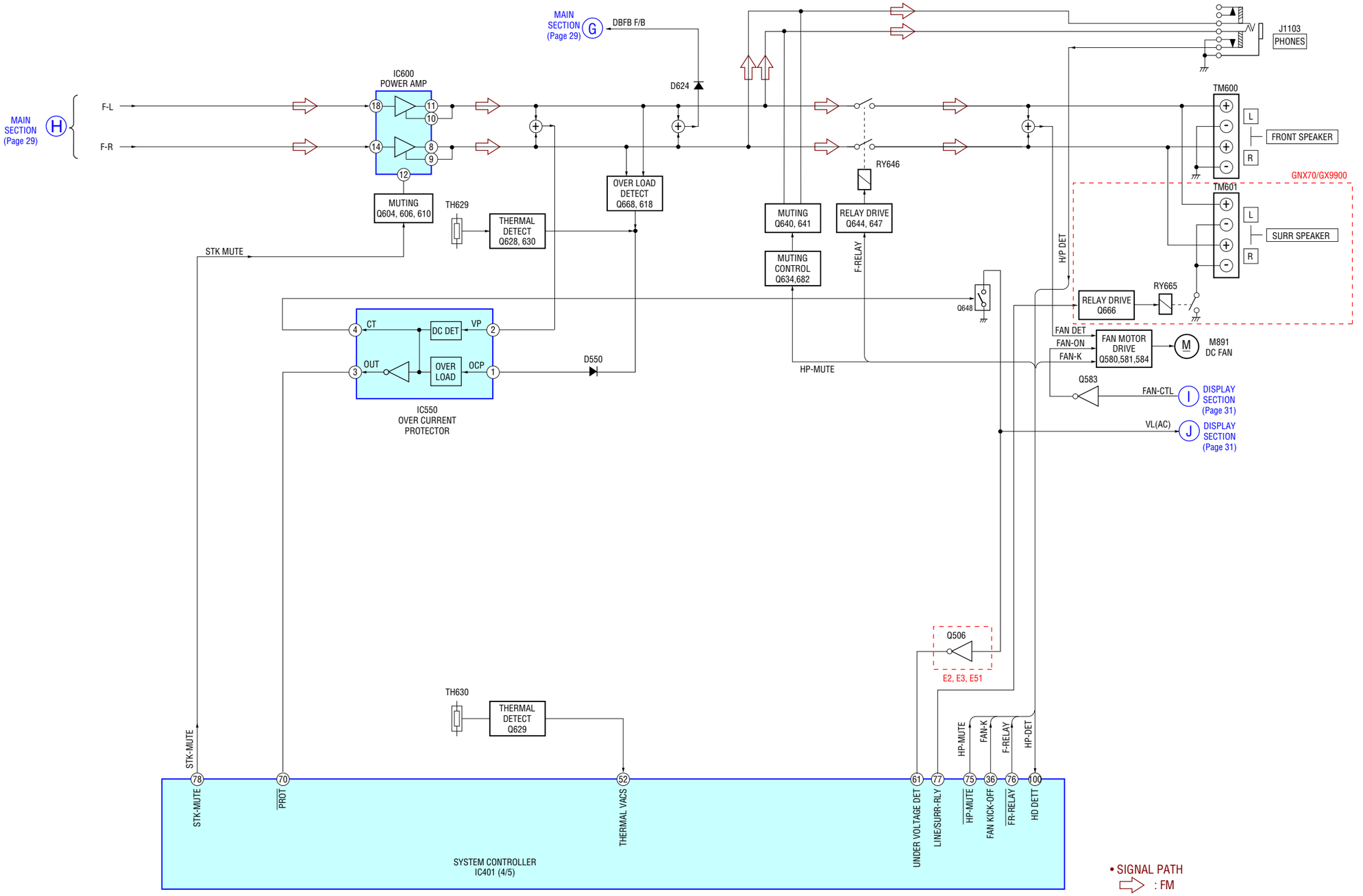

7-6. BLOCK DIAGRAM – DISPLAY SECTION –

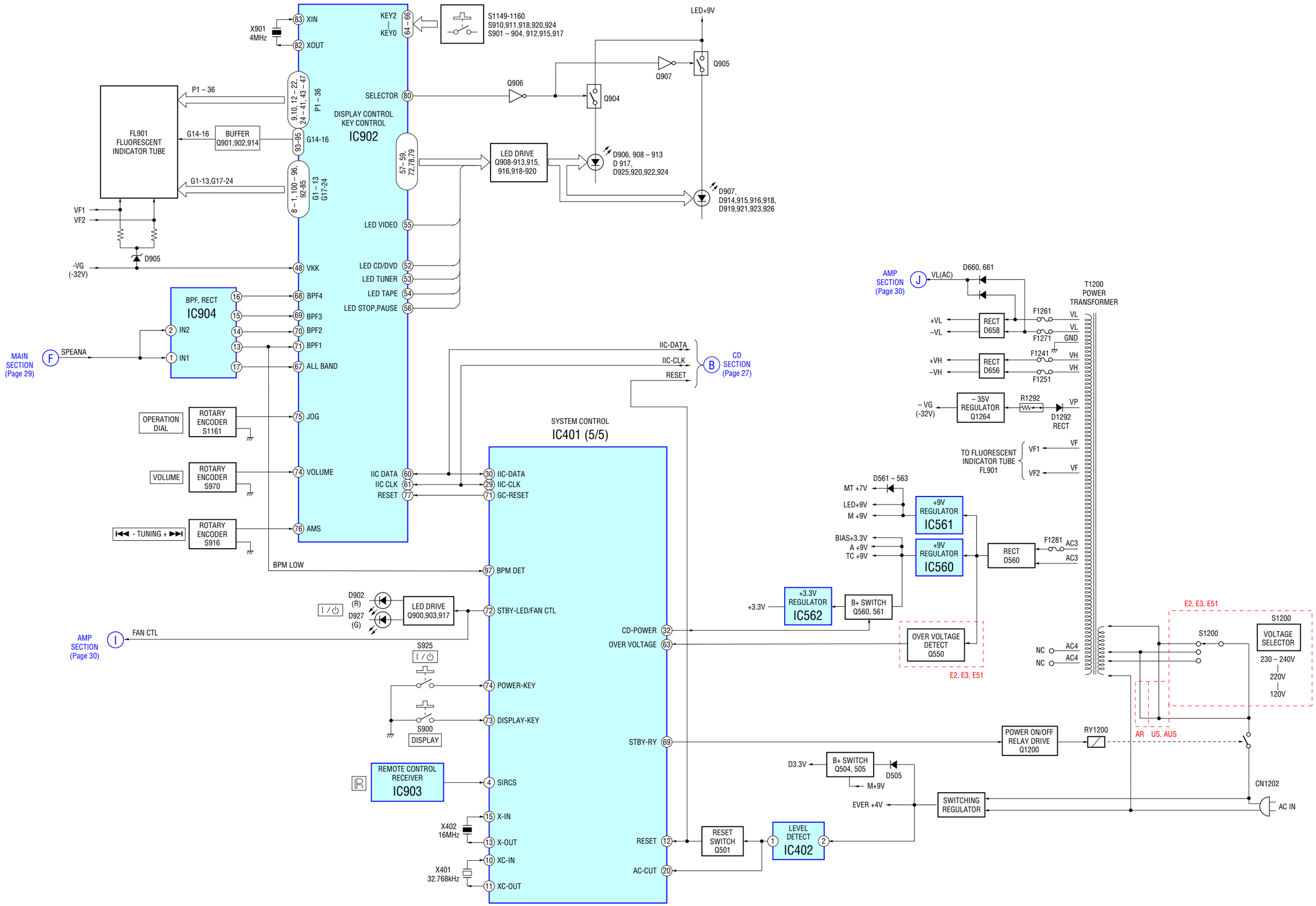

7-7. PRINTED WIRING BOARD – CD BOARD –

• See page 26 for Circuit Boards Location.

: Uses unleaded solder.

【CD BOARD】(SIDE A)

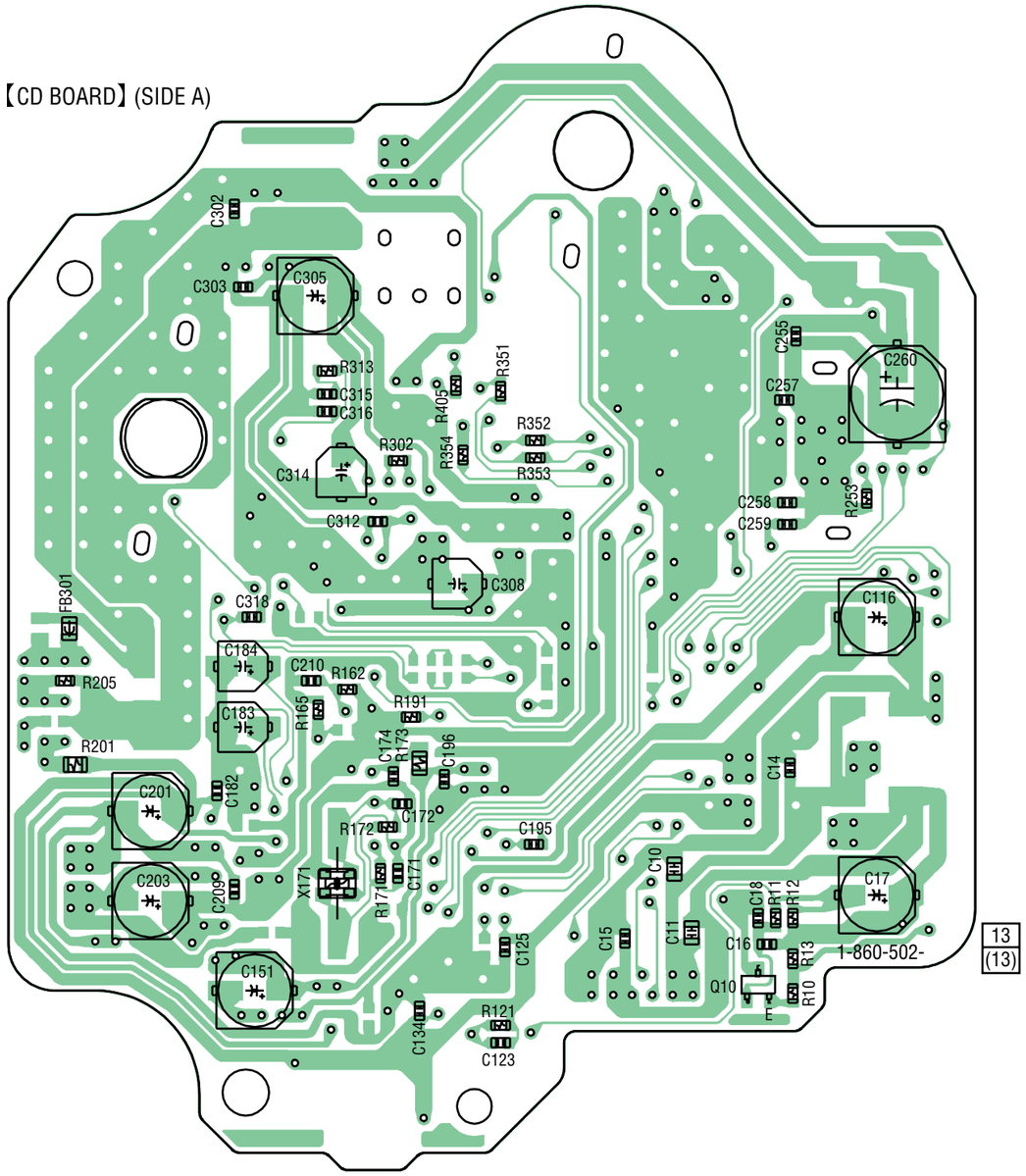

【CD BOARD】(SIDE B)

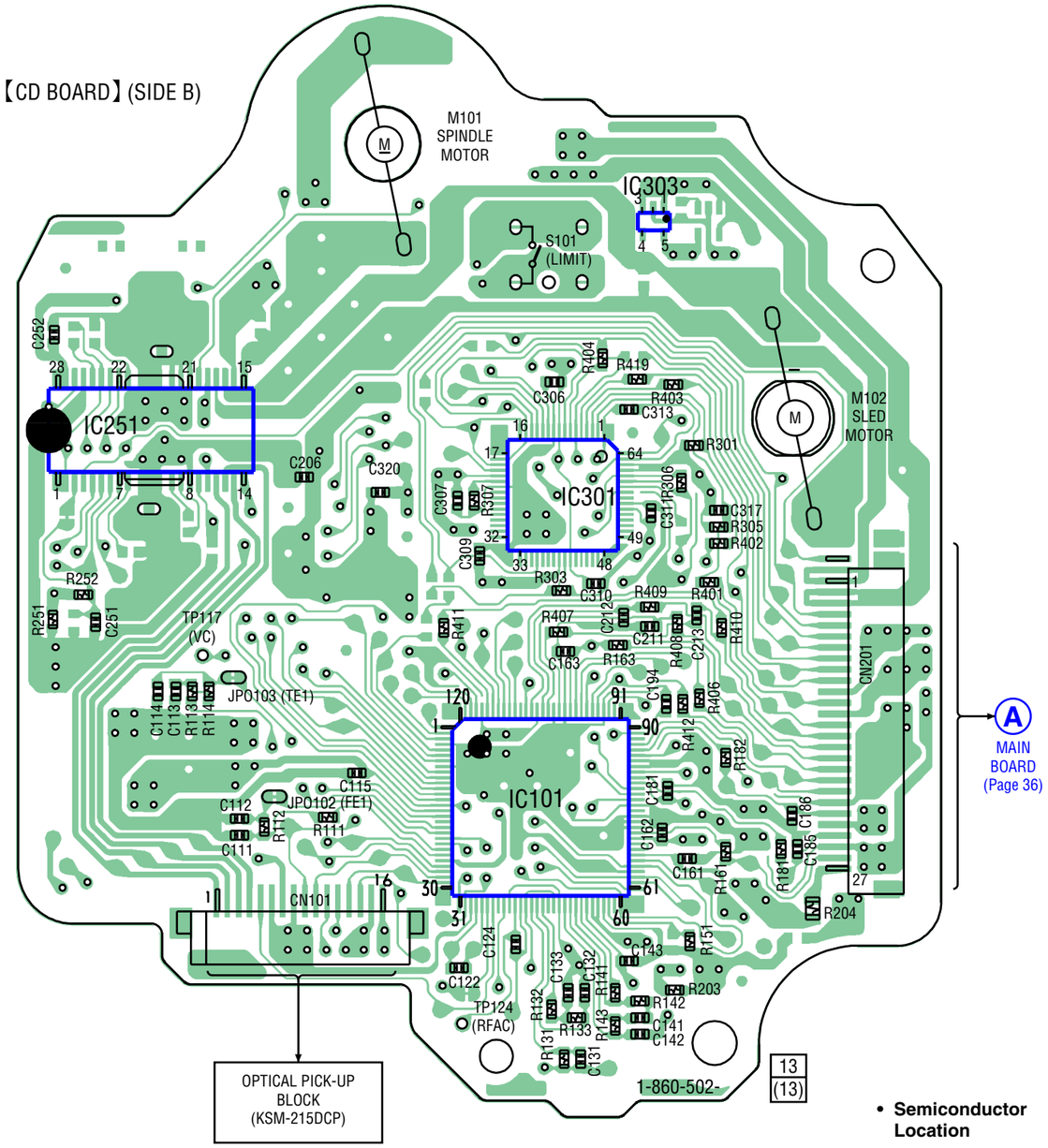

• **Semiconductor Location**

Ref. No.	Location
IC101	D-8
IC251	C-6
IC301	C-8
IC303	B-8
Q10	E-4

7-8. SCHEMATIC DIAGRAM – CD BOARD –

• See page 49 for IC Block Diagrams. • See page 48 for Waveforms. • See page 50 for IC Pin Function Description.

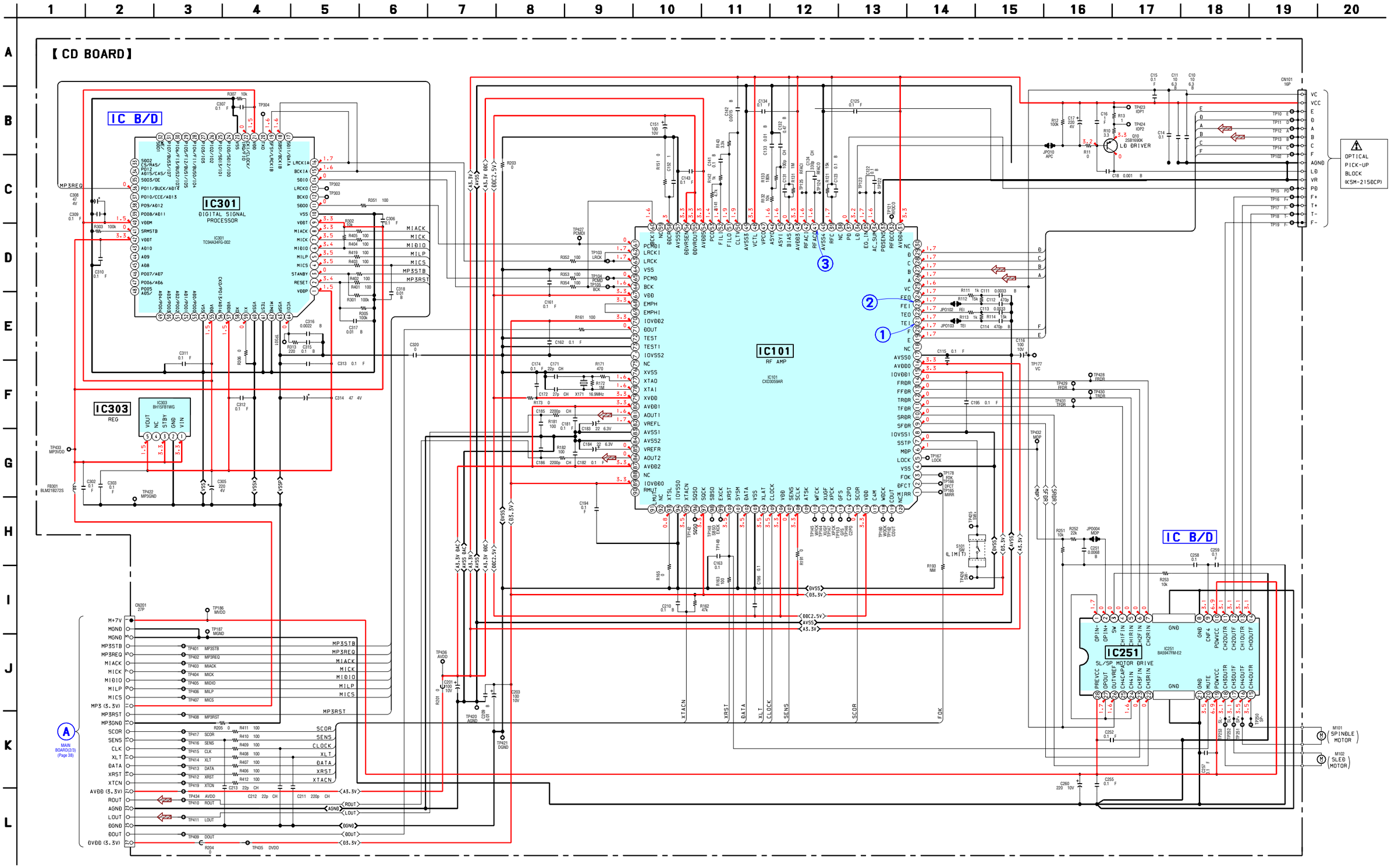

7-9. PRINTED WIRING BOARD – CD MECHANISM BOARDS –

• See page 26 for Circuit Boards Location.

: Uses unleaded solder.

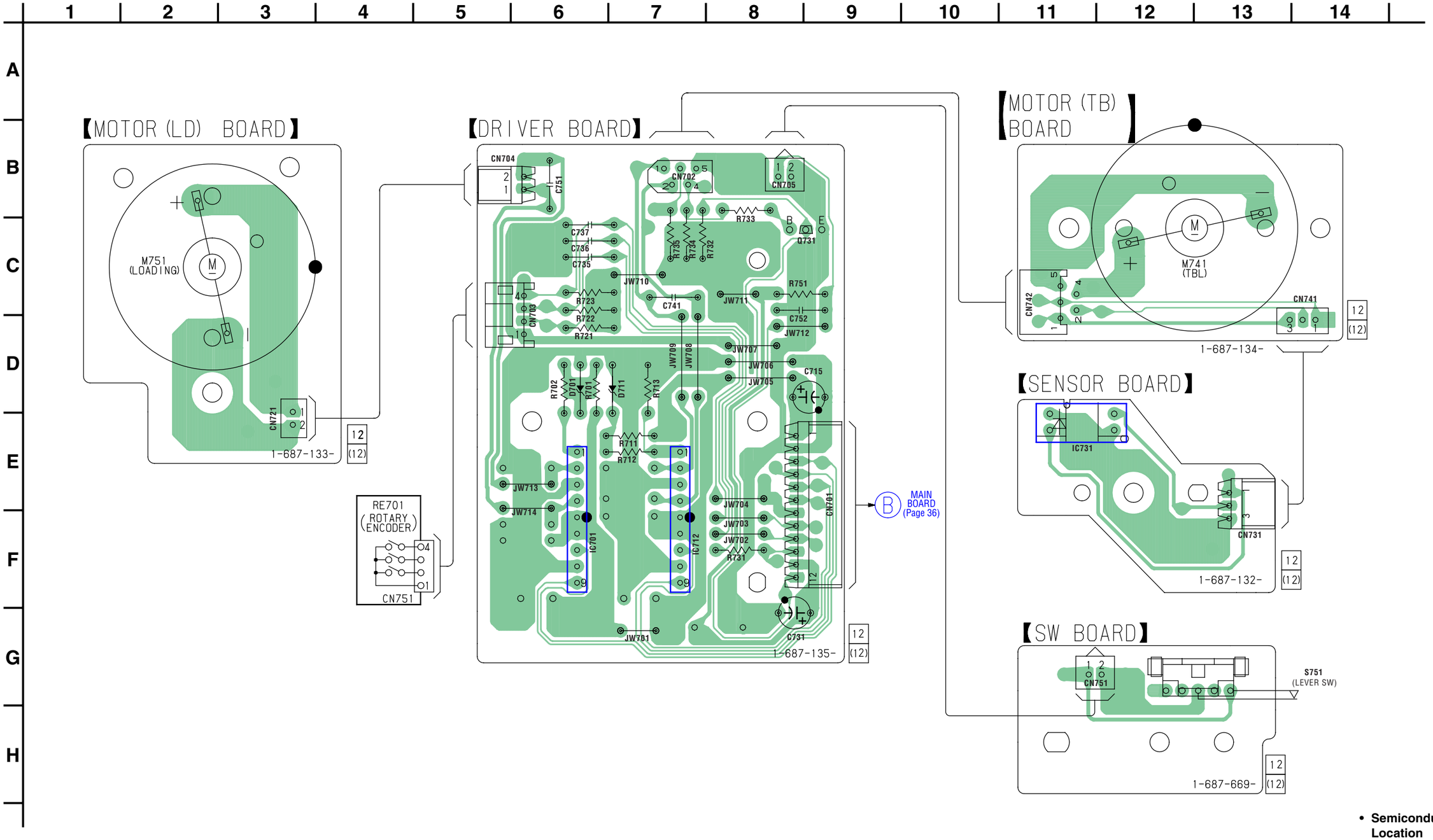

• **Semiconductor Location**

Ref. No.	Location
D701	D-6
D711	D-7
IC701	F-6
IC712	F-7
IC731	E-11
Q731	C-9

7-10. SCHEMATIC DIAGRAM – CD MECHANISM BOARDS –

• See page 48 for IC Block Diagrams.

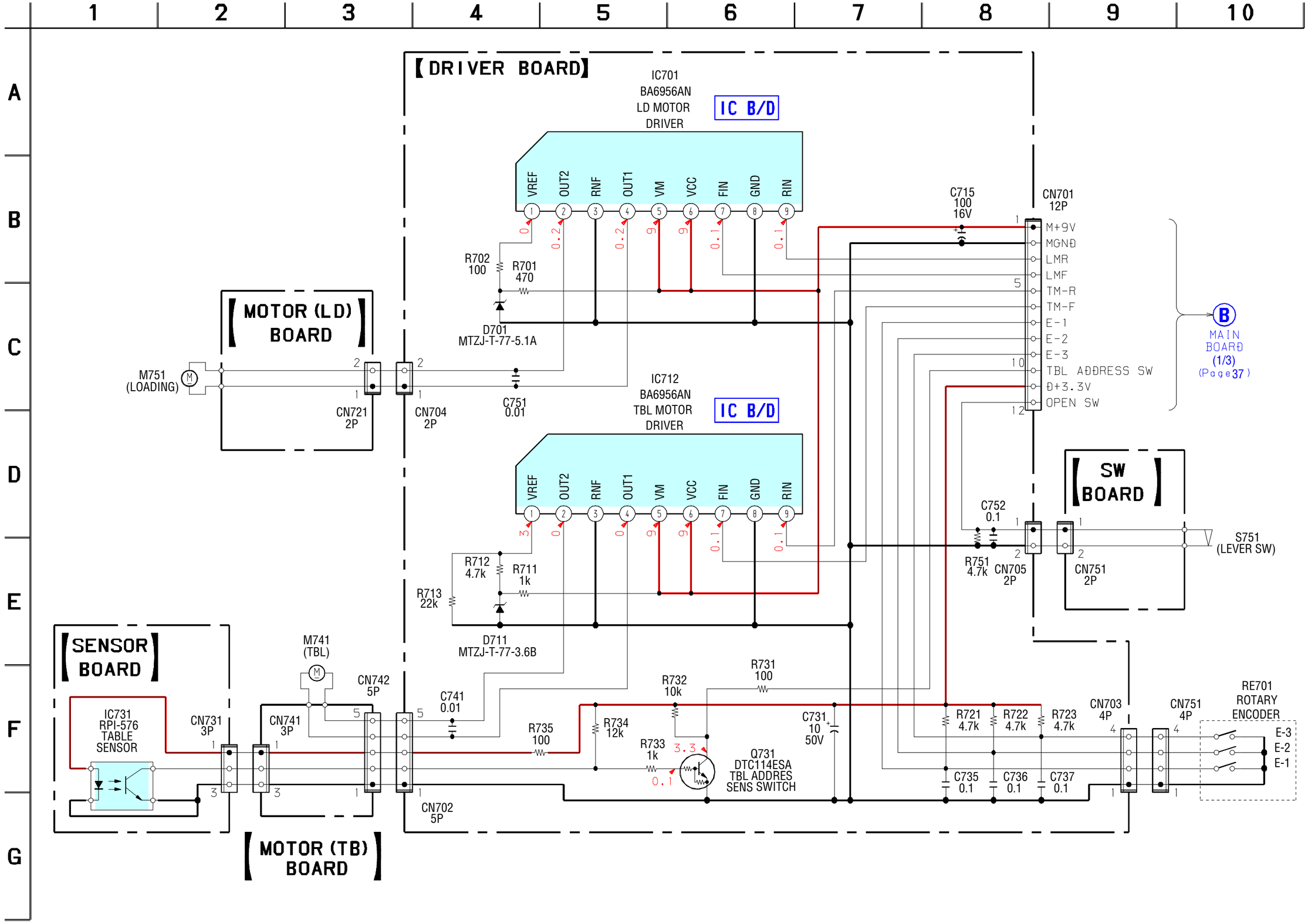

7-11. PRINTED WIRING BOARD – MAIN BOARD –

• See page 26 for Circuit Boards Location.

: Uses unleaded solder.

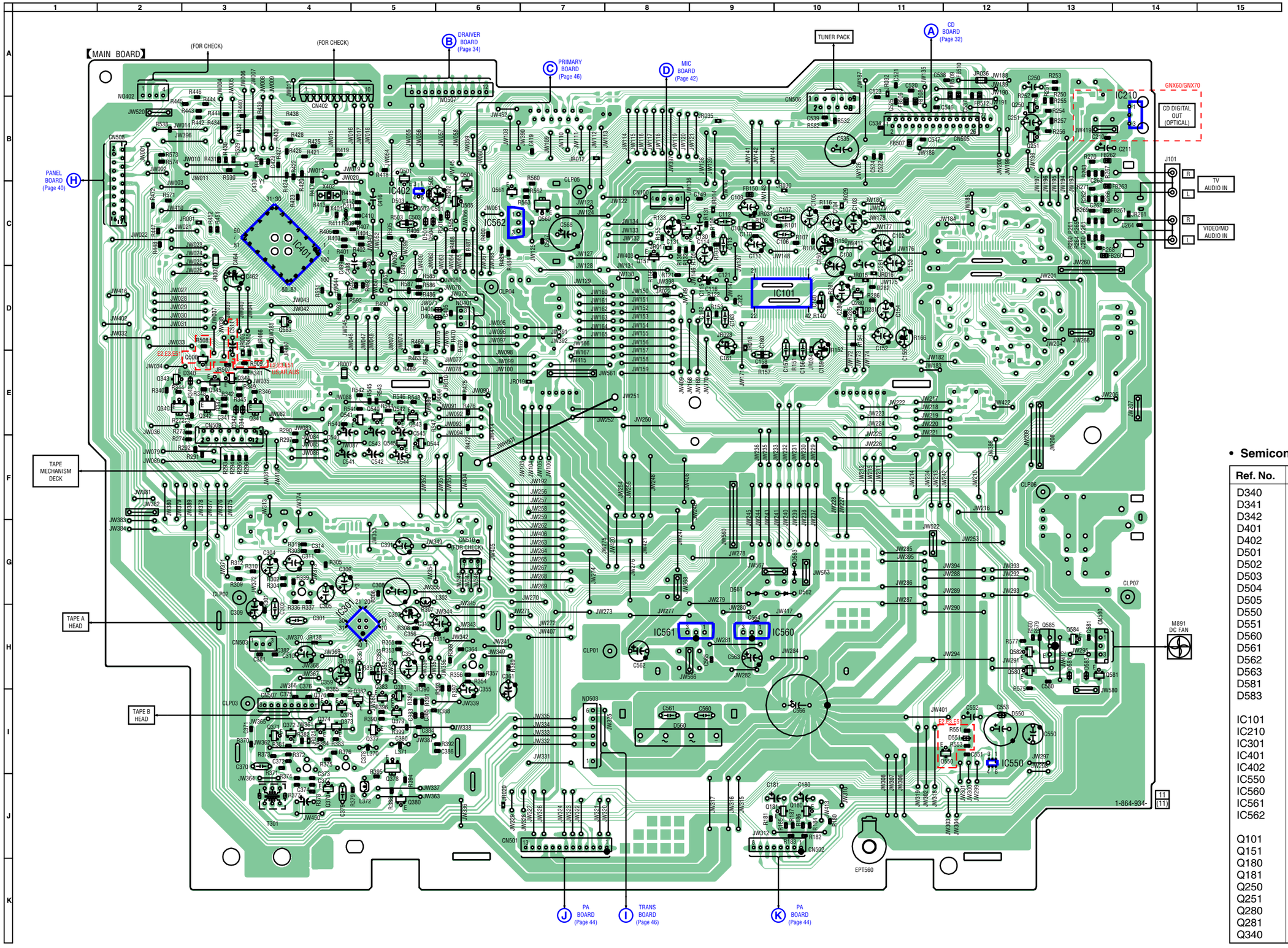

• Semiconductor Location

Ref. No.	Location	Ref. No.	Location
D340	E-3	Q341	E-3
D341	E-3	Q342	E-3
D342	E-3	Q343	E-2
D401	D-6	Q344	E-3
D402	D-6	Q345	E-3
D501	C-5	Q370	J-4
D502	C-5	Q371	I-4
D503	C-5	Q372	I-4
D504	C-5	Q373	I-4
D505	C-6	Q374	I-4
D550	I-12	Q375	I-4
D551	I-12	Q376	I-4
D560	I-8	Q377	I-5
D561	G-9	Q378	I-5
D562	G-10	Q379	I-5
D563	G-10	Q380	J-5
D581	H-13	Q381	I-5
D583	H-13	Q382	I-5
		Q383	I-5
IC101	D-10	Q501	B-5
IC210	B-14	Q504	C-6
IC301	H-5	Q505	C-6
IC401	C-4	Q506	E-3
IC402	C-5	Q540	E-5
IC550	I-12	Q541	E-5
IC560	H-9	Q542	E-5
IC561	H-9	Q543	E-5
IC562	C-6	Q544	F-5
		Q545	F-5
Q101	C-8	Q550	I-12
Q151	C-8	Q560	C-7
Q180	J-10	Q561	C-6
Q181	J-10	Q580	H-13
Q250	B-13	Q581	H-13
Q251	B-13	Q582	H-13
Q280	D-10	Q583	D-4
Q281	D-11	Q584	H-13
Q340	E-2	Q585	H-13

7-12. SCHEMATIC DIAGRAM – MAIN BOARD (1/3) –

• See page 48 for Waveforms. • See page 53 for IC Pin Function Description.

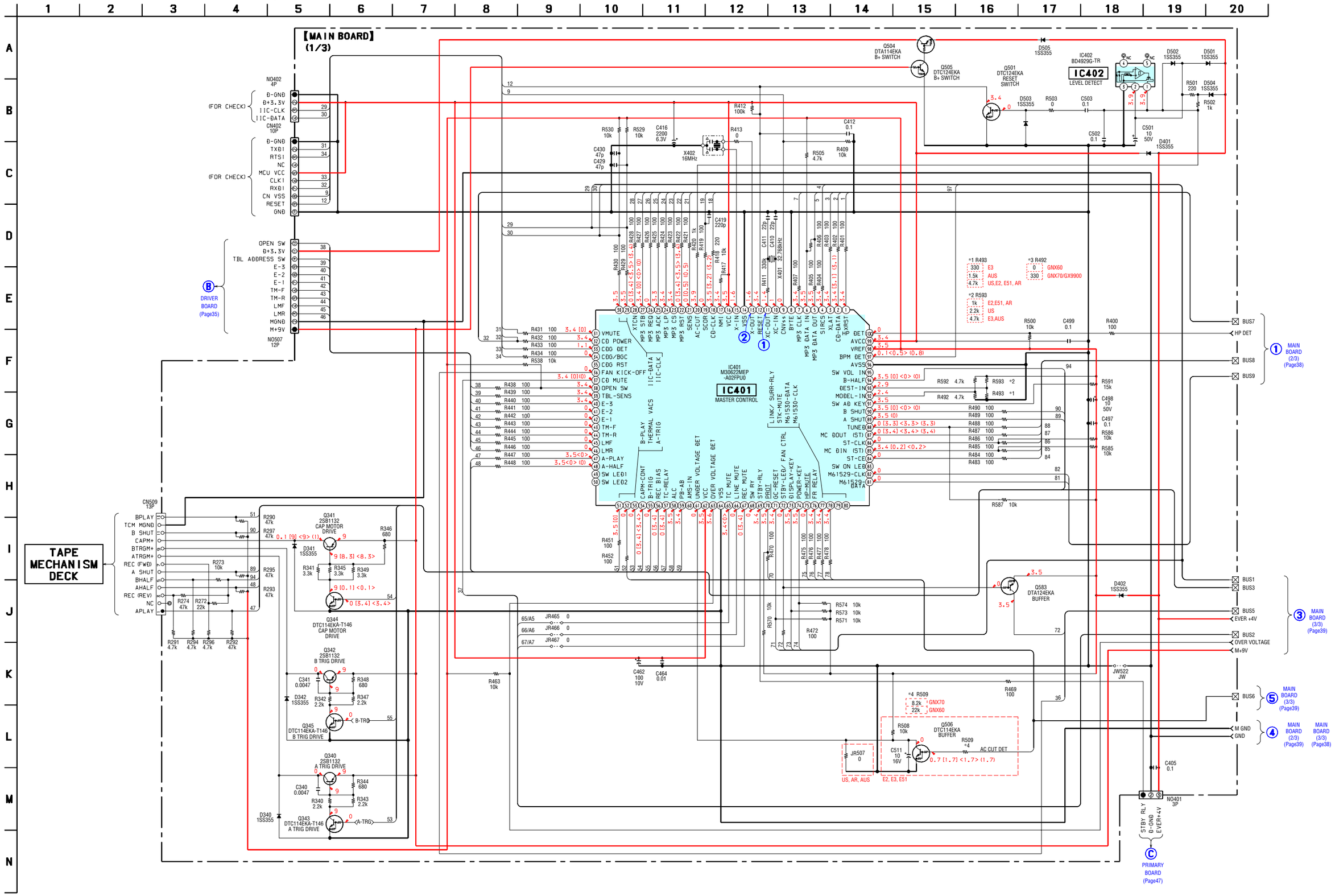

7-13. SCHEMATIC DIAGRAM – MAIN BOARD (2/3) –

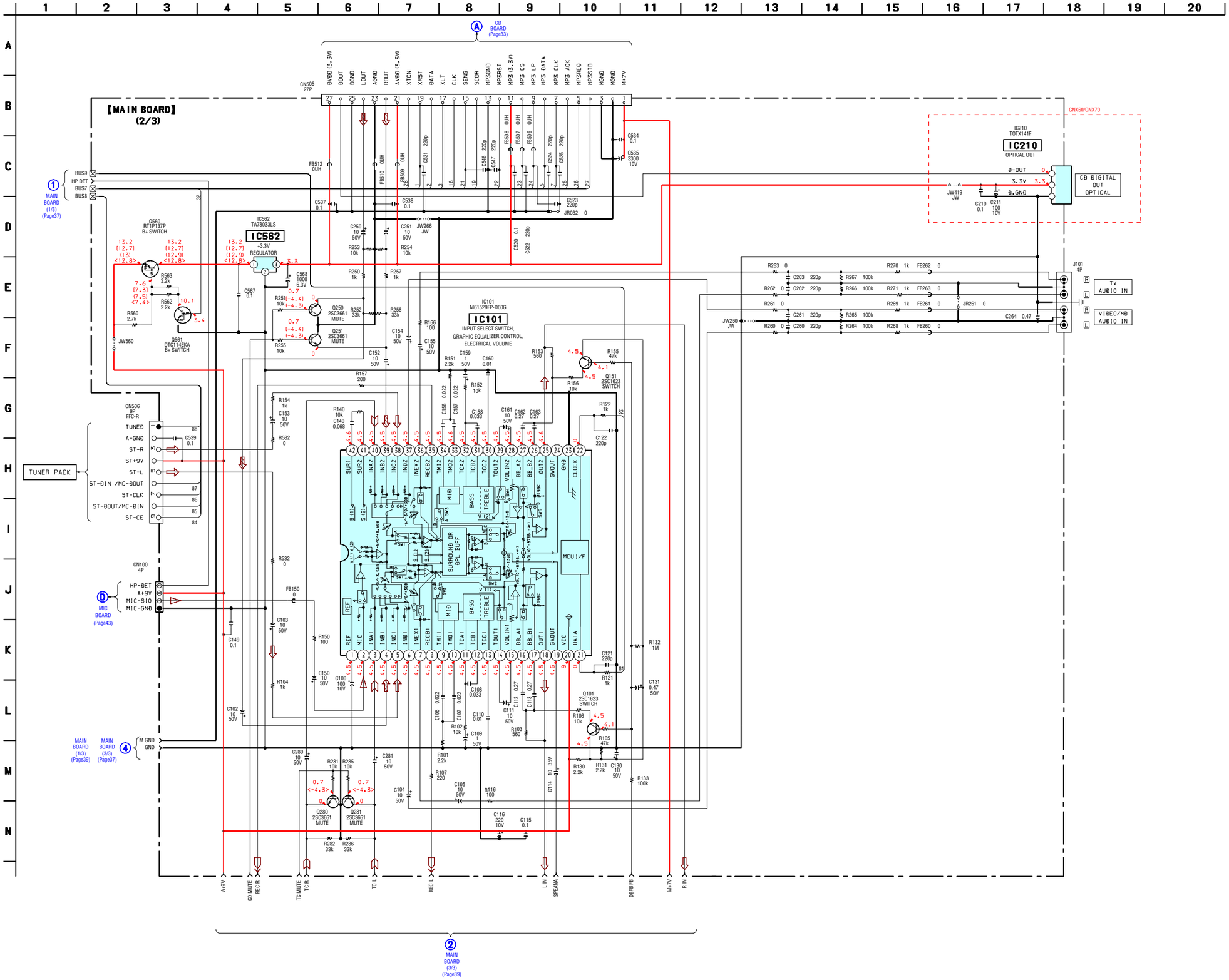

7-14. SCHEMATIC DIAGRAM – MAIN BOARD (3/3) –

• See page 48 for Waveforms.

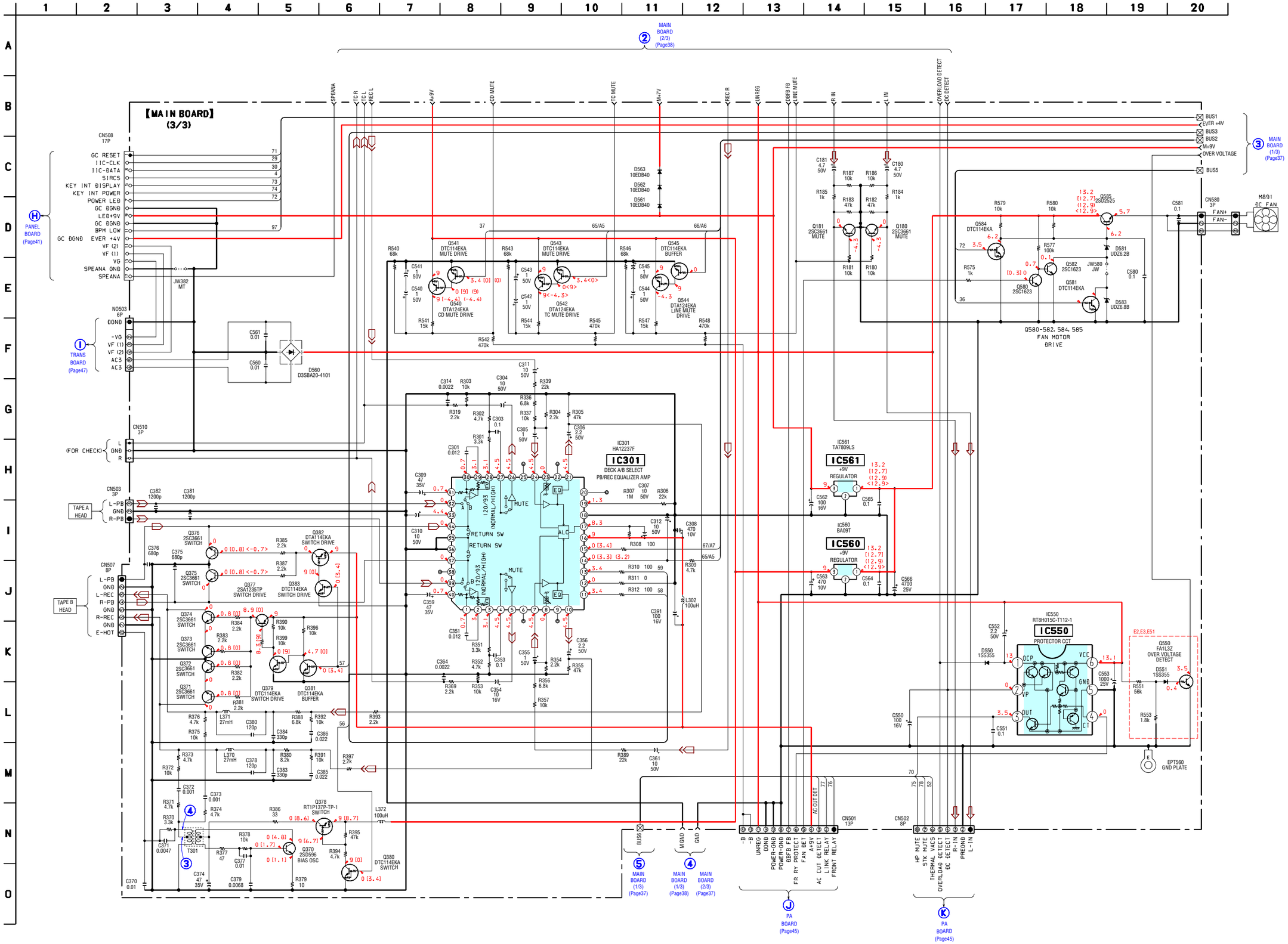

7-15. PRINTED WIRING BOARD – PANEL BOARD –

• See page 26 for Circuit Boards Location.

: Uses unleaded solder.

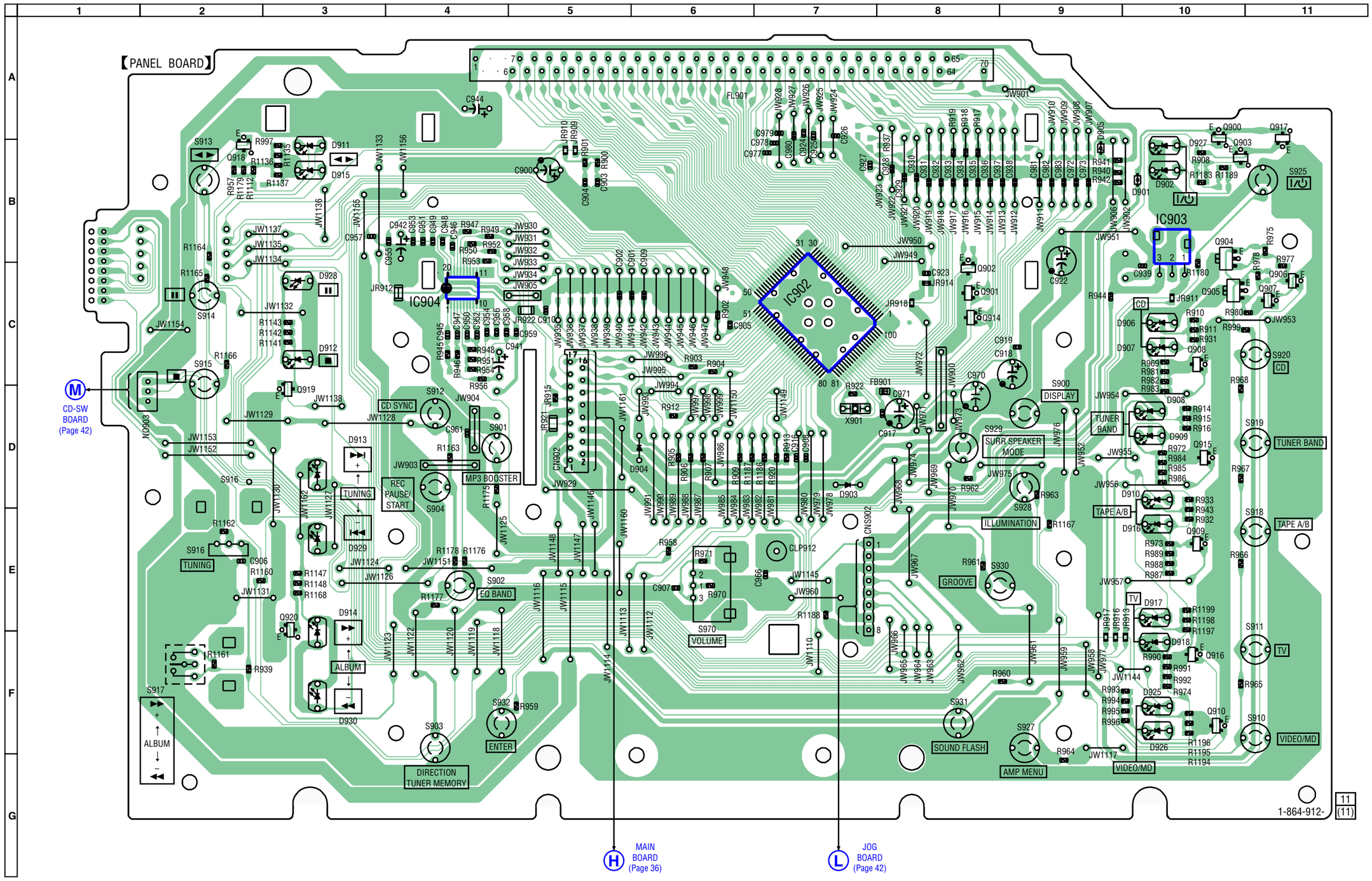

• Semiconductor Location

Ref. No.	Location
D901	B-10
D902	B-10
D903	D-7
D904	D-6
D905	B-9
D906	C-10
D907	C-10
D908	D-10
D909	D-10
D910	D-10
D911	B-3
D912	C-3
D913	D-3
D914	E-3
D915	B-3
D916	E-10
D917	E-10
D918	F-10
D925	F-10
D926	F-10
D927	B-10
D928	C-3
D929	E-3
D930	F-3
IC902	C-7
IC903	B-10
IC904	C-4
Q900	A-10
Q901	C-8
Q902	C-8
Q903	B-10
Q904	B-10
Q905	C-10
Q906	C-11
Q907	C-11
Q908	C-10
Q909	E-10
Q910	F-10
Q914	C-8
Q915	D-10
Q916	F-10
Q917	A-11
Q918	B-2
Q919	D-3
Q920	E-3

7-16. SCHEMATIC DIAGRAM – PANEL BOARD –

• See page 48 for IC Block Diagrams. • See page 48 for Waveforms. • See page 55 for IC Pin Function Description.

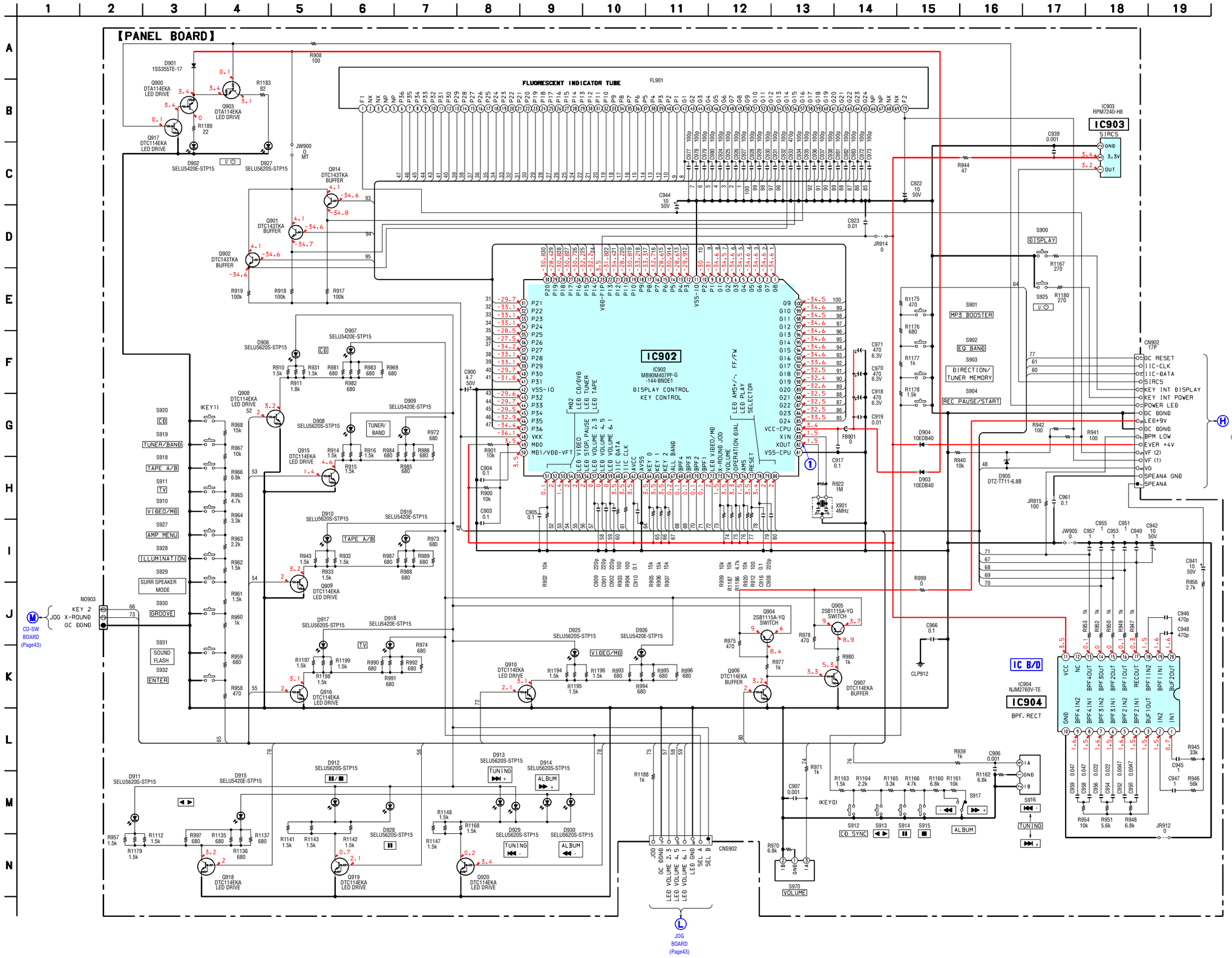

7-17. PRINTED WIRING BOARD – CD-SW, JOG, MIC BOARDS –

• See page 26 for Circuit Boards Location.

: Uses unleaded solder.

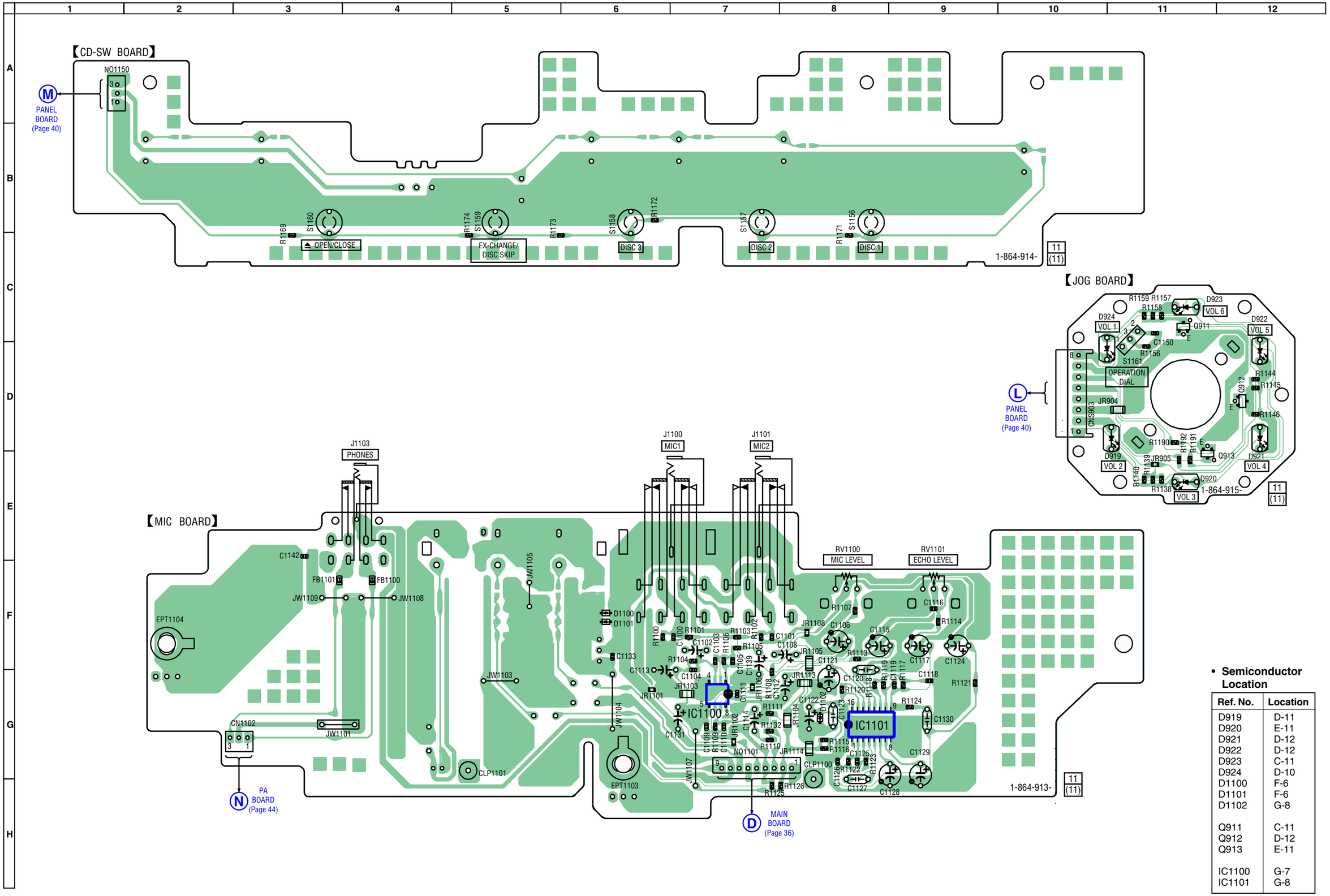

• **Semiconductor Location**

Ref. No.	Location
D919	D-11
D920	E-11
D921	D-12
D922	D-12
D923	C-11
D924	D-10
D1100	F-6
D1101	F-6
D1102	G-8
Q911	C-11
Q912	D-12
Q913	E-11
IC1100	G-7
IC1101	G-8

7-18. SCHEMATIC DIAGRAM – CD-SW, JOG, MIC BOARDS –

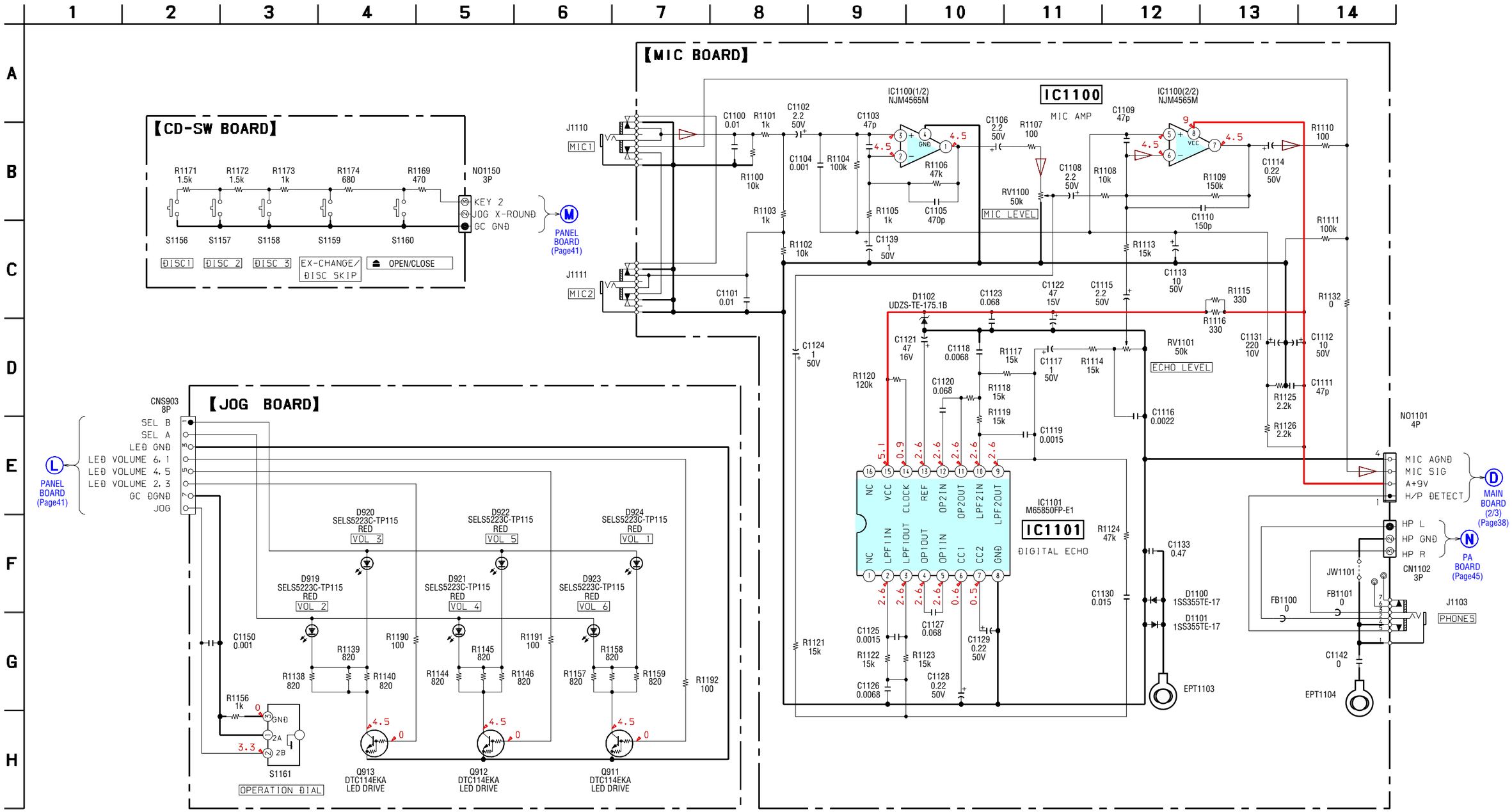

7-19. PRINTED WIRING BOARD – PA BOARD –

• See page 26 for Circuit Boards Location.

: Uses unleaded solder.

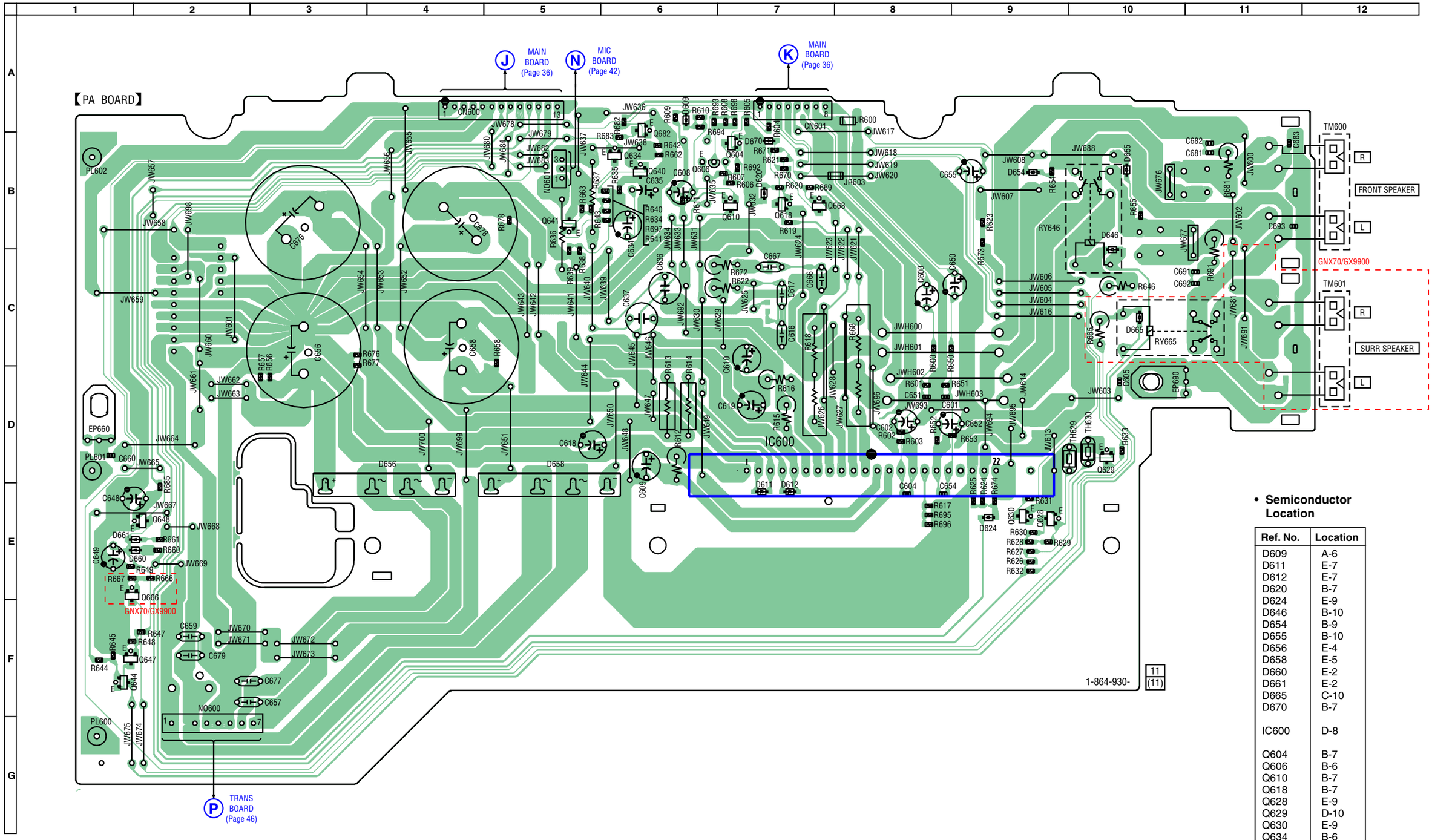

• **Semiconductor Location**

Ref. No.	Location
D609	A-6
D611	E-7
D612	E-7
D620	B-7
D624	E-9
D646	B-10
D654	B-9
D655	B-10
D656	E-4
D658	E-5
D660	E-2
D661	E-2
D665	C-10
D670	B-7
IC600	D-8
Q604	B-7
Q606	B-6
Q610	B-7
Q618	B-7
Q628	E-9
Q629	D-10
Q630	E-9
Q634	B-6
Q640	B-6
Q641	B-5
Q644	F-1
Q647	F-1
Q648	E-2
Q666	E-1
Q668	B-7
Q682	A-6

7-20. SCHEMATIC DIAGRAM – PA BOARD –

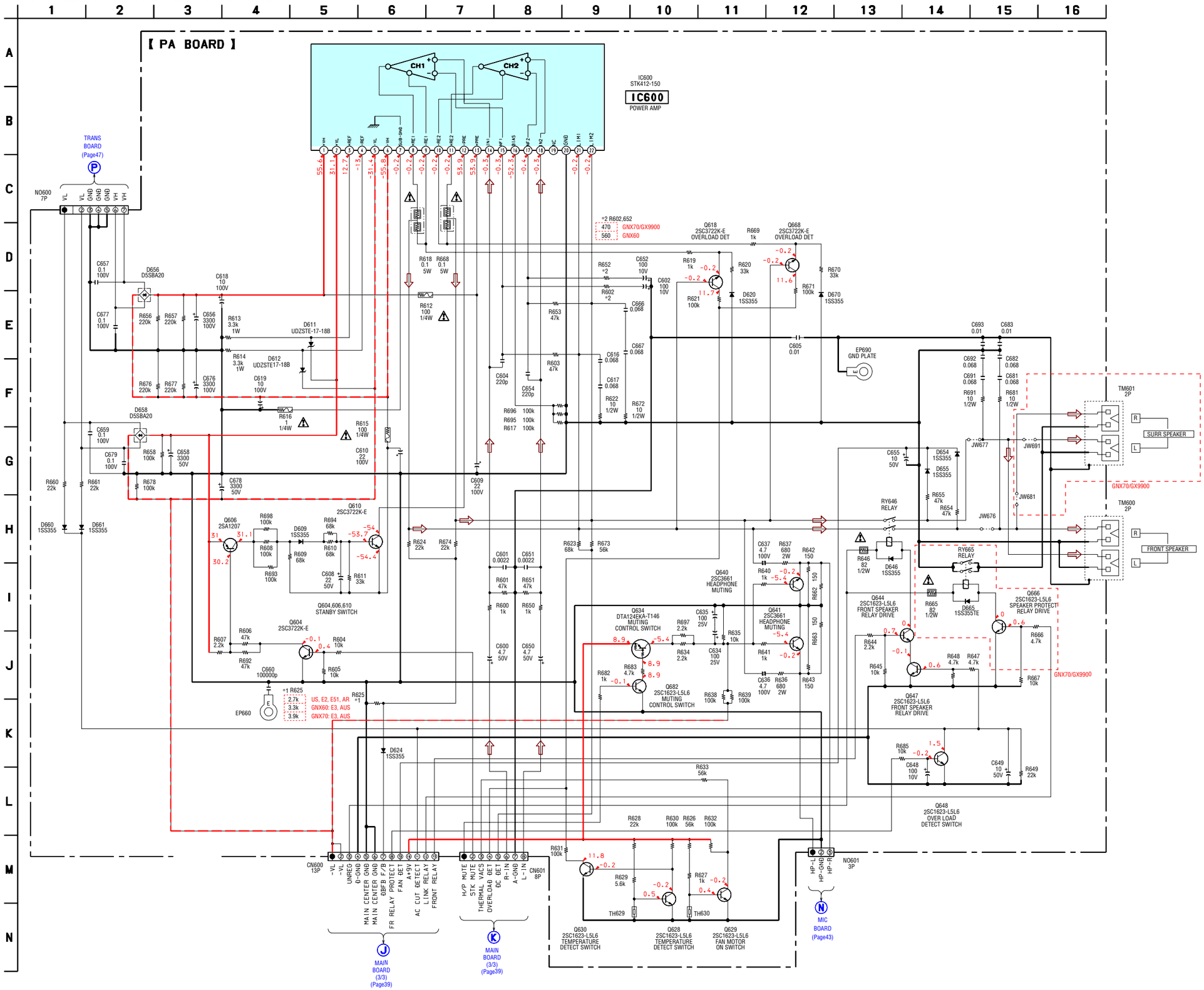

7-21. PRINTED WIRING BOARD – TRANS, PRIMARY BOARDS –

• See page 26 for Circuit Boards Location.

: Uses unleaded solder.

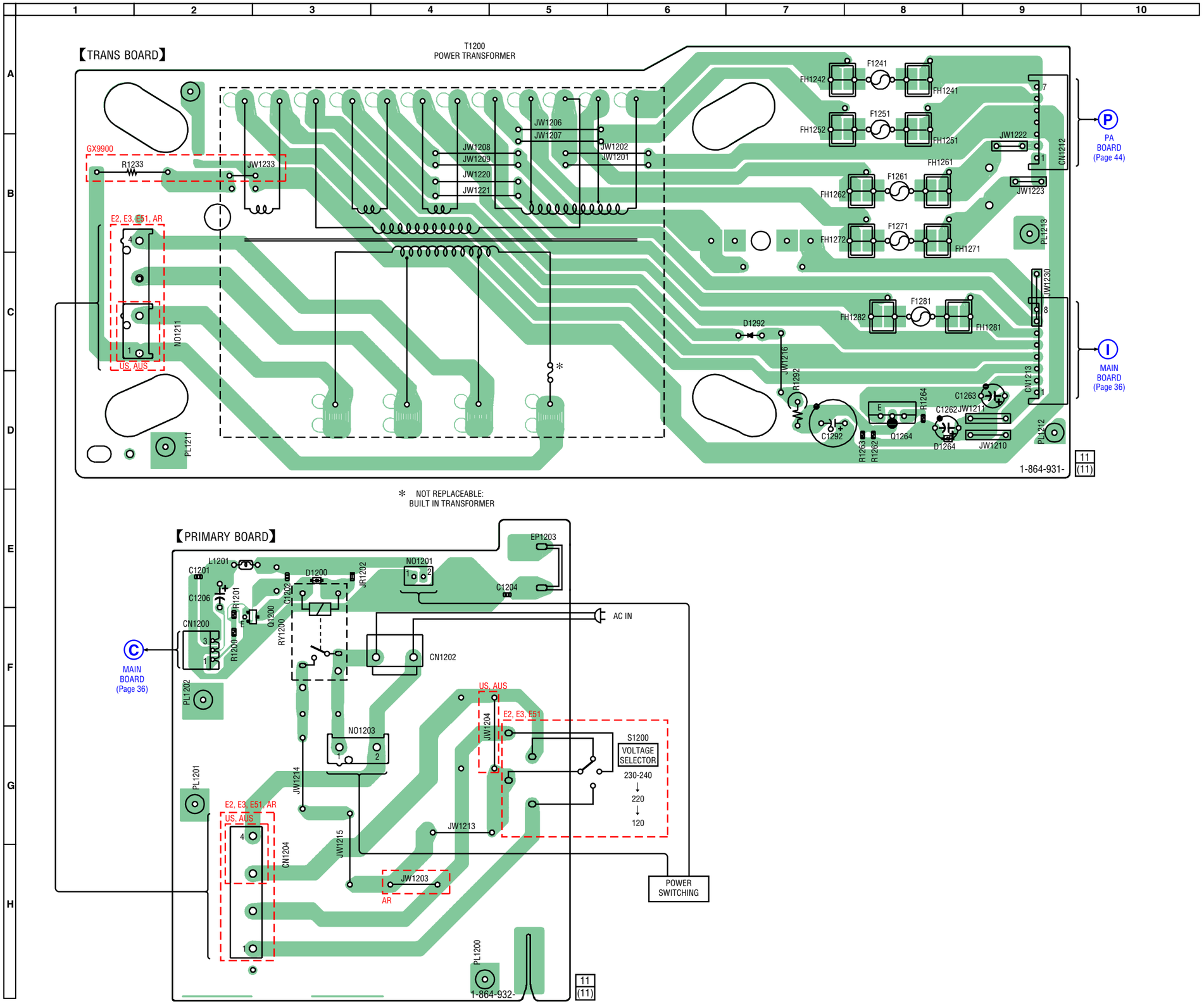

• **Semiconductor Location**

Ref. No.	Location
D1200	E-3
D1264	D-8
D1292	C-7
Q1200	F-3
Q1264	D-8

7-22. SCHEMATIC DIAGRAM –TRANS, PRIMARY BOARD –

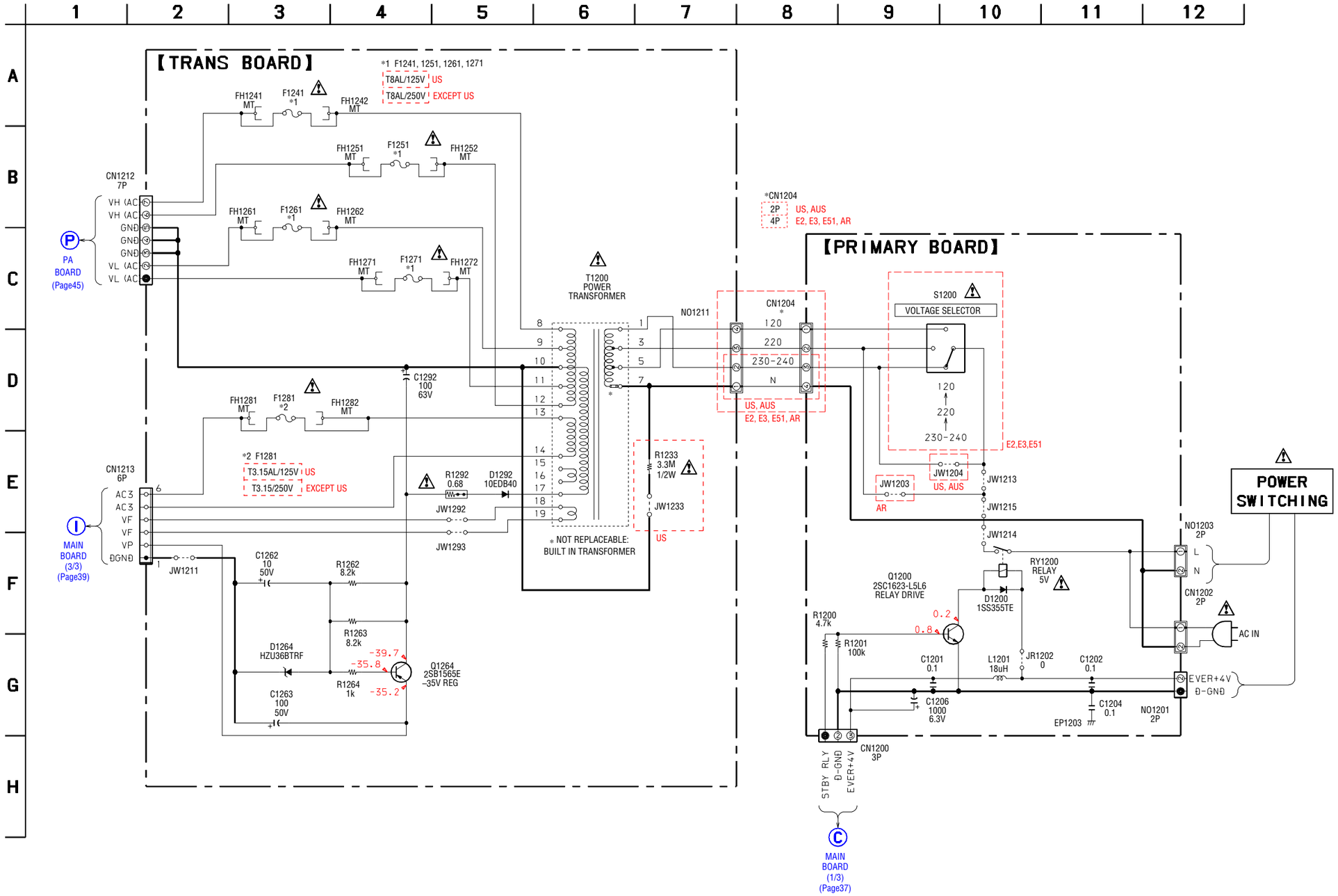

• **WAVEFORMS**

– CD BOARD –

① **IC101 ㉑ TEI**

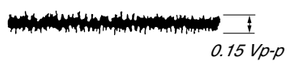

0.2V/DIV, 0.2 msec/DIV

② **IC101 ㉓ FEI**

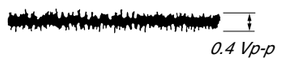

0.1V/DIV, 1 msec/DIV

③ **IC101 ㊶ RFAC**

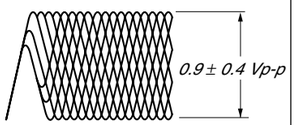

0.2V/DIV, 0.5 µsec/DIV

– MAIN BOARD –

① **IC401 ⑪ XC-OUT**

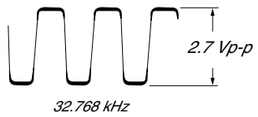

1V/DIV, 10 µsec/DIV

② **IC401 ⑬ X-OUT**

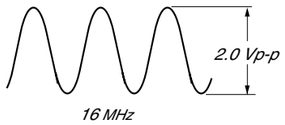

1V/DIV, 50 nsec/DIV

③ **T301 ⑤ TAPE REC only**

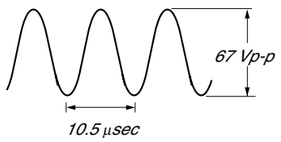

50V/DIV, 10 µsec/DIV

④ **T301 ④ TAPE REC only**

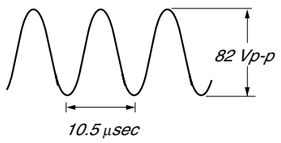

50V/DIV, 10 µsec/DIV

– PANEL BOARD –

① **IC902 ㊷ X OUT**

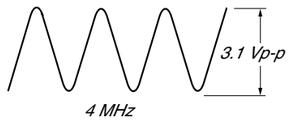

1V/DIV, 0.2 µsec/DIV

• **IC Block Diagram**

– DRIVER Board –

IC701, 712 BA6956AN

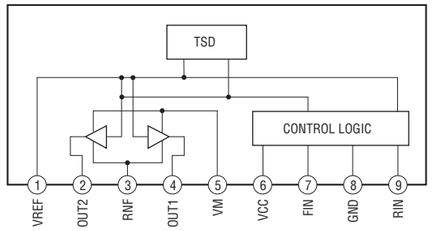

– PANEL Board –

IC904 NJM2760V-TE2

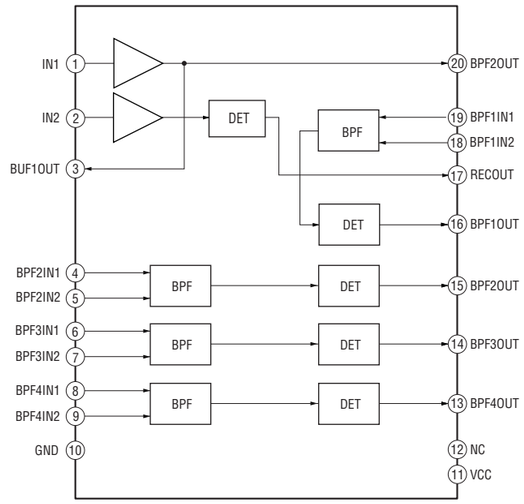

– CD Board –

IC251 BA5947FM-E2

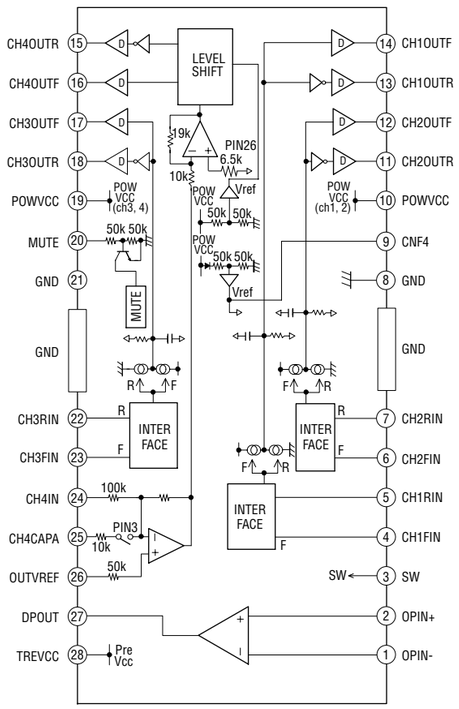

– CD Board –

IC301 TC94A34FG-002

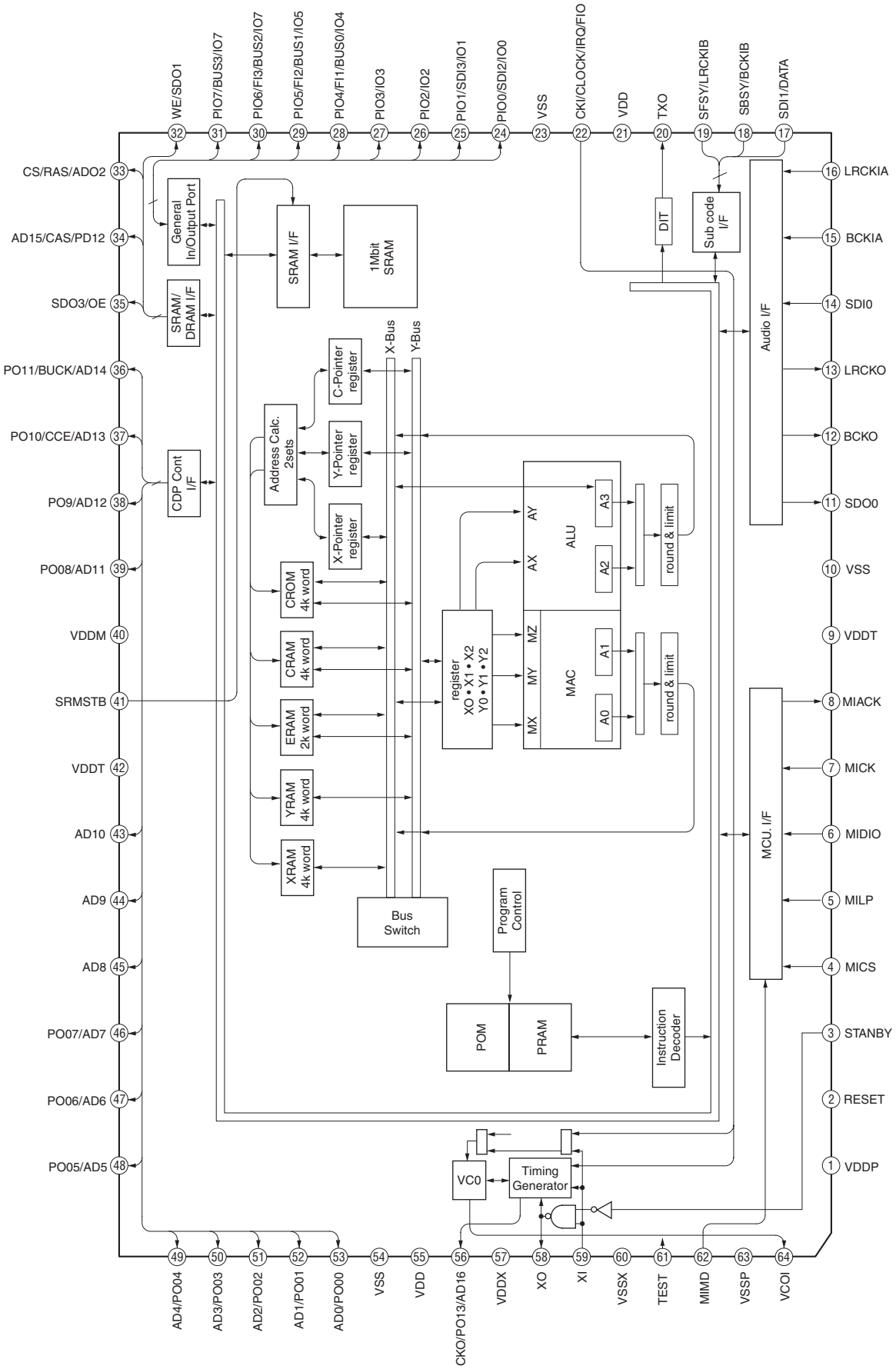

7-23. IC Pin Function Descriptions

• IC101 CXD3059AR (RF AMP) (CD BOARD)

Pin No.	Pin Name	I/O	Description
1	MIRR	I/O	Not used (Open)
2	DFCT	I/O	Not used (Open)
3	FOK	I/O	Not used (Open)
4	VSS	—	Ground
5	LOCK	I/O	Not used (Open)
6	MDP	O	Spindle motor servo control output
7	SSTP	I	Disk innermost detection signal input
8	IOVSS1	—	Ground
9	SFDR	O	Sled drive signal output
10	SRDR	O	Sled drive signal output
11	TFDR	O	Tracking drive signal output
12	TRDR	O	Tracking drive signal output
13	FFDR	O	Focus drive signal output
14	FRDR	O	Focus drive signal output
15	IOVDD1	—	Power supply (+3.3V)
16	AVDD0	—	Power supply (+3.3V)
17	AVSS0	—	Ground
18	NC	—	Not used (Open)
19	E	I	E signal input
20	F	I	F signal input
21	TEI	I	Tracking error signal input
22	TEO	O	Tracking error signal output
23	FEI	I	Focus error signal input
24	FEO	O	Focus error signal output
25	VC	I/O	Center voltage output from RF amplifier block
26	A	I	A signal input
27	B	I	B signal input
28	C	I	C signal input
29	D	I	D signal input
30	NC	—	Not used (Open)
31	AVDD4	—	Power supply (+3.3V)
32	RFDCO	O	RFDC signal output (Not used)
33	PDSENS	I	Reference voltage pin
34	AC_SUM	O	RFAC summing amplifier output
35	EG_IN	I	Equalizer circuit input
36	LD	O	APC LD drive signal output
37	PD	I	APC PD signal input
38	NC	—	Not used (Open)
39	RFC	I	Equalizer cut-off frequency adjustment pin
40	AVSS4	—	Ground
41	RFACO	O	RFAC signal output
42	RFACI	I	RFAC signal input or EFM signal input
43	AVDD3	—	Power supply (+3.3V)
44	BIAS	I	Asymmetry circuit constant current input
45	ASYI	I	Asymmetry comparator voltage input
46	ASYO	O	EFM full-swing output
47	VPCO	O	Not used (Open)
48	VCTL	I	Wide-band EFM PLL VCO2 control voltage input

Pin No.	Pin Name	I/O	Description
49	AVSS3	—	Ground
50	CLTV	I	Multiplier VCO1 control voltage input
51	FILO	O	Master PLL (slave = digital PLL) filter output
52	FILI	I	Master PLL filter input
53	PCO	O	Master PLL charge pump output
54	AVDD5	—	Power supply (+3.3V)
55	DDVROUT	O	DC/DC converter output (+2.5V)
56	DDVRSEN	I	DC/DC converter output voltage monitor input
57	AVSS5	—	Ground
58	DDCR	I	DC/DC converter reset input
59	NC	—	Not used (Open)
60	BCKI	I	D/A interface bit clock input
61	PCMDI	I	D/A interface serial data input
62	LRCKl	I	D/A interface LR clock input
63	LRCK	O	D/A interface LR clock output f = Fs
64	VSS	—	Ground
65	PCMD	O	D/A interface serial data output
66	BCK	O	D/A interface bit clock output
67	VDD	—	Power supply (+2.5V)
68	EMPH	O	High when the playback disc has emphasis, low it has not
69	EMPHI	I	High when de-emphasis is ON, low when input OFF
70	IOVDD2	—	Power supply (+3.3V)
71	DOUT	O	Digital Out output
72	TEST	I	Test pin (Connected ground)
73	TEST1	I	Test pin (Connected ground)
74	IOVSS2	—	Ground
75	NC	—	Not used (Open)
76	XVSS	—	Ground
77	XTAO	O	Crystal oscillation circuit output
78	XTAI	I	Crystal oscillation circuit input
79	XVDD	—	Power supply (+2.5V)
80	AVDD1	—	Power supply (+3.3V)
81	AOUT1	O	L-ch analog output
82	VREFL	O	L-ch reference voltage
83	AVSS1	—	Ground
84	AVSS2	—	Ground
85	VREFR	O	R-ch reference voltage
86	AOUT2	O	R-ch analog output
87	AVDD2	—	Power supply (+3.3V)
88	NC	—	Not used (Open)
89	IOVDD0	—	Power supply (+3.3V)
90	RMUT	O	Not used (Open)
91	LMUT	O	Not used (Open)
92	NC	—	Not used (Open)
93	XTSL	I	Crystal selection input (Pull down)
94	IOVSS0	—	Ground
95	XTACN	I	Oscillation circuit control (H:Self-oscillation, L:oscillation stop)
96	SQSO	O	Not used (Open)
97	SQCK	I	SQSO readout clock input (Connected to +VDD(+3.3v))
98	SBSO	O	Not used (Open)

Pin No.	Pin Name	I/O	Description
99	EXCK	I	Not used (Open)
100	XRST	I	System reset input from M30622MEP
101	SYSM	I	Mute input (Connected to ground)
102	DATA	I	Serial data input from M30622MEP
103	VSS	—	ground
104	XLAT	I	Latch input from M30622MEP
105	CLOCK	I	Serial data transfer clock input from M30622MEP
106	VDD	—	Power supply (+2.5V)
107	SENS	O	SENS output to M30622MEP
108	SCLK	I	SENS serial data readout clock input (Connected to +VDD(+3.3v))
109	ATSK	I/O	Not used (Open)
110	WFCK	O	Not used (Open)
111	XUGF	O	Not used (Open)
112	XPCK	O	Not used (Open)
113	GFS	O	Not used (Open)
114	C2PO	O	Not used (Open)
115	SCOR	O	High output when the sub code sync, S0 or S1, is detected
116	VDD	—	Power supply (+2.5V)
117	C4M	O	Not used (Open)
118	WDCK	O	Not used (Open)
119	COUT	I/O	Not used (Open)
120	NC	—	Not used (Open)

• **IC401 M30622MEP-A02FPUO SYSTEM CONTROL (MAIN Board)**

Pin No.	Pin Name	I/O	Description
1	XRST	O	Reset signal output to CXD3053AR
2	CD-DATA	O	Serial data output to CXD3053AR
3	XLAT	O	Serial data latch signal output to CXD3053AR
4	SIRCS	I	Remote control signal input
5	MP3 DATA OUT	O	Serial data output to TC94A34FG
6	MP3 DATA IN	I	Serial data input from TC94A34FG
7	MP3 CLK	O	Serial data transfer clock output to TC94A34FG
8	BYTE	I	Not used (Connected to ground)
9	CNVSS	—	Ground at test (Pull down)
10	XC-IN	I	Sub system clock input (32.768KHz)
11	XC-OUT	O	Sub system clock output (32.768KHz)
12	RESET	I	System reset input
13	X-OUT	O	Main system clock output (16MHz)
14	VSS	—	Ground
15	X-IN	I	Main system clock input (16MHz)
16	VCC	—	Power supply (+5V)
17	NMI	I	Not used (Pull up with resistor)
18	CD-CLK	O	CD data clock output
19	SCOR	I	Sub code sync (S0+S1) detection signal input
20	AC-CUT	I	AC off detection signal input
21	SENS	I	Internal status detection monitor input from CXD3059AR
22	MP3 RST	O	Reset signal output to TC94A34FG
23	MP3 CS	O	Chip select signal output to TC94A34FG
24	MP3 LP	O	Latch pulse output to TC94A34FG
25	MP3 ACK	I	Acknowledge signal input from TC94A34FG
26	MP3 REQ	I	Request signal input to TC94A34FG
27	MP3 STB	O	Standby mode signal output to TC94A34FG
28	XTCN	O	Oscillation on/off control signal output to CXD3053AR
29	IIC-CLK	I/O	IIC bus serial clock input/output
30	IIC-DATA	I/O	IIC bus serial data input/output
31	VMUTE	O	CDG video signal muting on/off control signal output
32	CD POWER	O	Not used (Open)
33	CDG DET	I	Not used (Open)
34	CDG/BGC	O	Not used (Open)
35	CDG RST	O	Not used (Open)
36	FAN KICK-OFF	O	Fan kick off pulse to start up fan rotation signal output
37	CD MUTE	O	CD muting on/off control signal output
38	OPEN SW	I	Eject detection signal input
39	TBL-SENS	I	Disc tray position detection signal input
40	E-3	I	Disc tray status detection signal input
41	E-2	I	Disc tray status detection signal input
42	E-1	I	Disc tray status detection signal input
43	TM-F	O	Table motor control signal output
44	TM-R	O	Table motor control signal output
45	LMF	O	Table loading motor control signal output
46	LMR	O	Table loading motor control signal output
47	A-PLAY	I	Deck A playback detection signal input
48	A-HALF	I	Deck A cassette detection signal input
49	SW LED1	O	Not used (Open)

Pin No.	Pin Name	I/O	Description
50	SW LED2	O	Not used (Open)
51	B-PLAY	I	Deck B playback detection signal input
52	THERMAL VACS	I	Thermal VACS detection input
53	A-TRIG	O	Deck A side trigger plunger drive signal output
54	CAPM-CONT	O	Capstan motor drive signal output
55	B-TRIG	O	Deck B side trigger plunger drive signal output
56	REC BIAS	O	Recording bias on/off control signal output
57	TC-RELAY	O	Recording/playback selection signal output
58	ALC	O	Automatic limiter control signal output
59	PB-AB	O	Deck A/B playback selection signal output
60	AMS-IN	I	Not used.
61	UNDER VOLTAGE DET	I	Under-voltage protection detection input
62	VCC	—	Power supply(+3.3V)
63	OVER VOLTAGE	I	Over-voltage protection detection input
64	VSS	—	Ground
65	TC MUTE	O	Tape playback muting on/off signal output
66	LINE MUTE	O	Line muting on/off signal output
67	REC MUTE	O	Recording muting on/off signal output
68	SW RY	O	Not used (Open)
69	STBY-RLY	O	Main power on/off signal output
70	PROT	I	Speaker protect detection signal input
71	GC-RESET	O	GC reset signal output
72	STBY-LED/FAN CTRL	O	POWER indicator LED drive signal output
73	DISPLAY-KEY	I	DISPLAY key press detection Interrupt signal input
74	POWER-KEY	I	POWER key press detection Interrupt signal input
75	HP-MUTE	O	Headphone muting on/off signal output
76	FR RELAY	O	front speakers relay drive signal output
77	LINK/SURR-RLY	O	Surround speaker mode control signal output
78	STK-MUTE	O	Power amplifier and sub woofer amplifier on/off control signal output
79	M61530-DATA	O	Not used (Open)
80	M61530-CLK	O	Not used (Open)
81	M61529-DATA	O	Serial data output to M61529FP
82	M61529-CLK	O	Serial transfer clock signal output to M61529FP
83	SW ON LED	O	Not used (Open)
84	ST-CE	O	PLL chip enable signal output to the tuner unit
85	MC DIN (ST)	O	PLL serial data output to the tuner unit
86	ST-CLK	I	PLL serial transfer clock signal output to the tuner unit
87	MC DOUT (ST)	I	PLL serial data input from the tuner unit
88	TUNED	I	Tuning detection signal input from the tuner unit
89	A SHUT	I	Shut off detection signal input from deck A side reel pulse detector
90	B SHUT	I	Shut off detection signal input from deck A side reel pulse detector
91	SW AD KEY	I	Not used (pull up)
92	MODEL-IN	I	Model input
93	DEST-IN	I	Destination input
94	B-HALF	I	Deck B cassette , forward side recording tab and reverse side recording tab detection signal input
95	SW VOL IN	I	Subwoofer on/off signal input
96	AVSS	—	Ground
97	BPF DET	I	Low frequency signal input from NJM2760 for RANDOM mode
98	VREF	I	A/D reference voltage input
99	AVCC	—	Power supply (+3.3V)
100	HP DET	I	Headphone connection detection signal input

• **IC902 MB90M407PF-G-144E1 DISPLAY CONTROL (PANEL Board)**

Pin No.	Pin Name	I/O	Description
1 to 8	G8 to G1	O	FLD grid signal output
9, 10	P1,P2	O	FLD segment signal output
11	VSS-IO	—	Ground
12 to 22	P3 to P13	O	FLD segment signal output
23	VDD-FIP	—	Power supply (+3.3V)
24 to 41	P14 to P31	O	FLD segment signal output
42	VSS-IO	—	Ground
43 to 47	P32 to P36	O	FLD segment signal output
48	VKK	—	Power supply (-35V)
49	MD0	I	MD0 signal at test
50	MD1/VDD-VFT	I	Not used (pull up)
51	MD2	I	Not used (pull down)
52	LED CD/DVD	O	LED drive signal output
53	LED TUNER	O	LED drive signal output
54	LED TAPE	O	LED drive signal output
55	LED VIDEO	O	LED drive signal output
56	LED STOP,PAUSE	O	LED drive signal output
57	LED VOLUME 2,3	O	LED drive signal output
58	LED VOLUME 4,5	O	LED drive signal output
59	LED VOLUME 6,1	O	LED drive signal output
60	IIC DATA	I/O	IIC bus serial data input/output
61	IIC CLK	I/O	IIC bus serial clock input/output
62	AVCC	—	Power supply (+3.3V)
63	AVSS	—	Ground
64 to 66	KEY0 to KEY2	I	Key input (A/D)
67	ALL BAND	I	Audio L+R signal input
68 to 71	BPF4 to BPF1	I	Spectrum analyzer signal input
72	LED VIDEO/MD	O	LED drive signal output
73	X-ROUND JOG	O	X-ROUND JOG encoder signal input
74	VOLUME	I	Volume encoder signal input
75	OPERATION DIAL	I	JOG dial encoder signal input
76	AMS	I	AMS dial signal input
77	RESET	I	Reset input
78	LED AMS+/-,FF/FW	O	LED drive signal output
79	LED PLAY	O	LED drive signal output
80	SELECTOR	O	LED group select signal output
81	VSS-CPU	—	Ground
82	XOUT	O	Crystal oscillator output (4MHz)
83	XIN	I	Crystal oscillator input (4MHz)
84	VCC-CPU	—	Power supply (+3.3V)
85 to 100	G24 to G9	O	FLD grid signal output

SECTION 8
EXPLODED VIEWS

NOTE:

- -XX, -X mean standardized parts, so they may have some differences from the original one.
- Items marked "*" are not stocked since they are seldom required for routine service. Some delay should be anticipated when ordering these items.
- The mechanical parts with no reference number in the exploded views are not supplied.
- Hardware (# mark) list and accessories are given in the last of this parts list.
- Abbreviation
  AR : Argentine model
  AUS : Australian model
  E2 : 120V AC Area in E model
  E3 : 240V AC Area in E model
  E51 : Chilean and Peruvian model

The components identified by mark ⚠ or dotted line with mark ⚠ are critical for safety.
Replace only with part number specified.

8-1. CASE (TOP), REAR PANEL SECTION

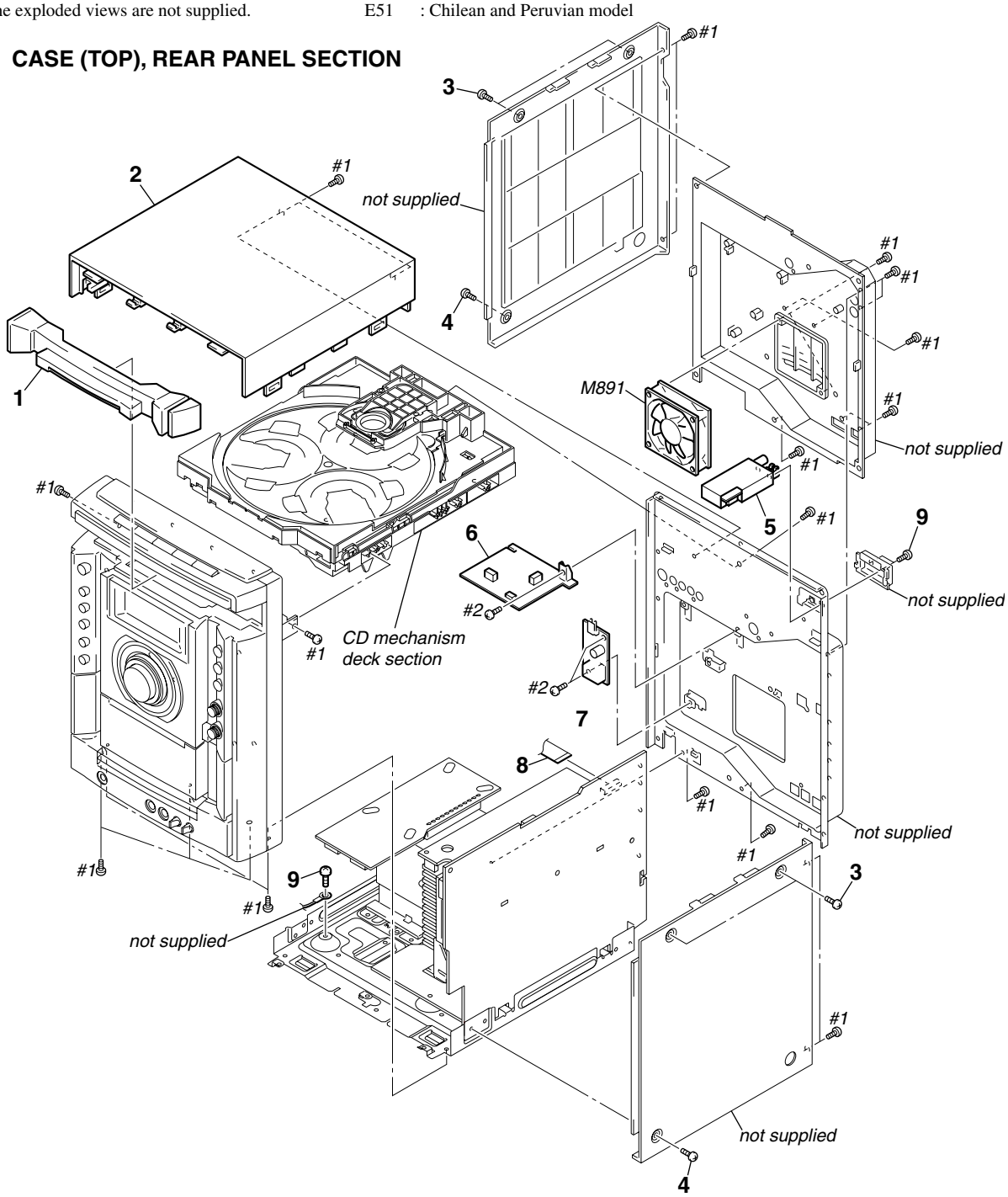

Ref. No.	Part No.	Description	Remarks
1	X-2025-402-1	LOADING PANEL ASSY (GNX60: E2, E51, AR)	
1	X-2025-404-1	LOADING PANEL ASSY (GNX70: E2, E51)	
1	X-2025-406-1	LOADING PANEL ASSY (GX9900)	
1	X-2050-804-1	LOADING PANEL ASSY (GNX60: E3, AUS)	
1	X-2050-805-1	LOADING PANEL ASSY (GNX70: E3, AUS)	
2	2-342-117-01	CASE (TOP) (GNX60/GNX70)	
2	2-342-117-21	CASE (TOP) (GX9900)	
3	3-363-099-32	SCREW (CASE 3 TP2)	
4	3-363-099-02	SCREW (CASE 3 TP2)	
5	1-693-671-11	TUNER (TM-10E) (GNX60/GNX70)	
5	1-693-672-11	TUNER (TM-10U) (GX9900)	
6	A-1089-510-A	PRIMARY BOARD, COMPLETE (E2, E3, E51)	
6	A-1089-525-A	PRIMARY BOARD, COMPLETE (US, AUS)	
6	A-1113-478-A	PRIMARY BOARD, COMPLETE (AR)	
⚠7	1-468-737-21	POWER, SWITCHING	
8	1-824-048-12	WIRE (FLAT TYPE) (27 CORE)	
9	3-077-331-21	+BV3 (3-CR)	
M891	1-763-372-11	FAN, DC	
#1	7-685-647-79	SCREW +BVTP 3X10 TYPE2 IT-3	
#2	7-685-646-79	SCREW +BVTP 3X8 TYPE2 IT-3	

8-2. FRONT PANEL SECTION

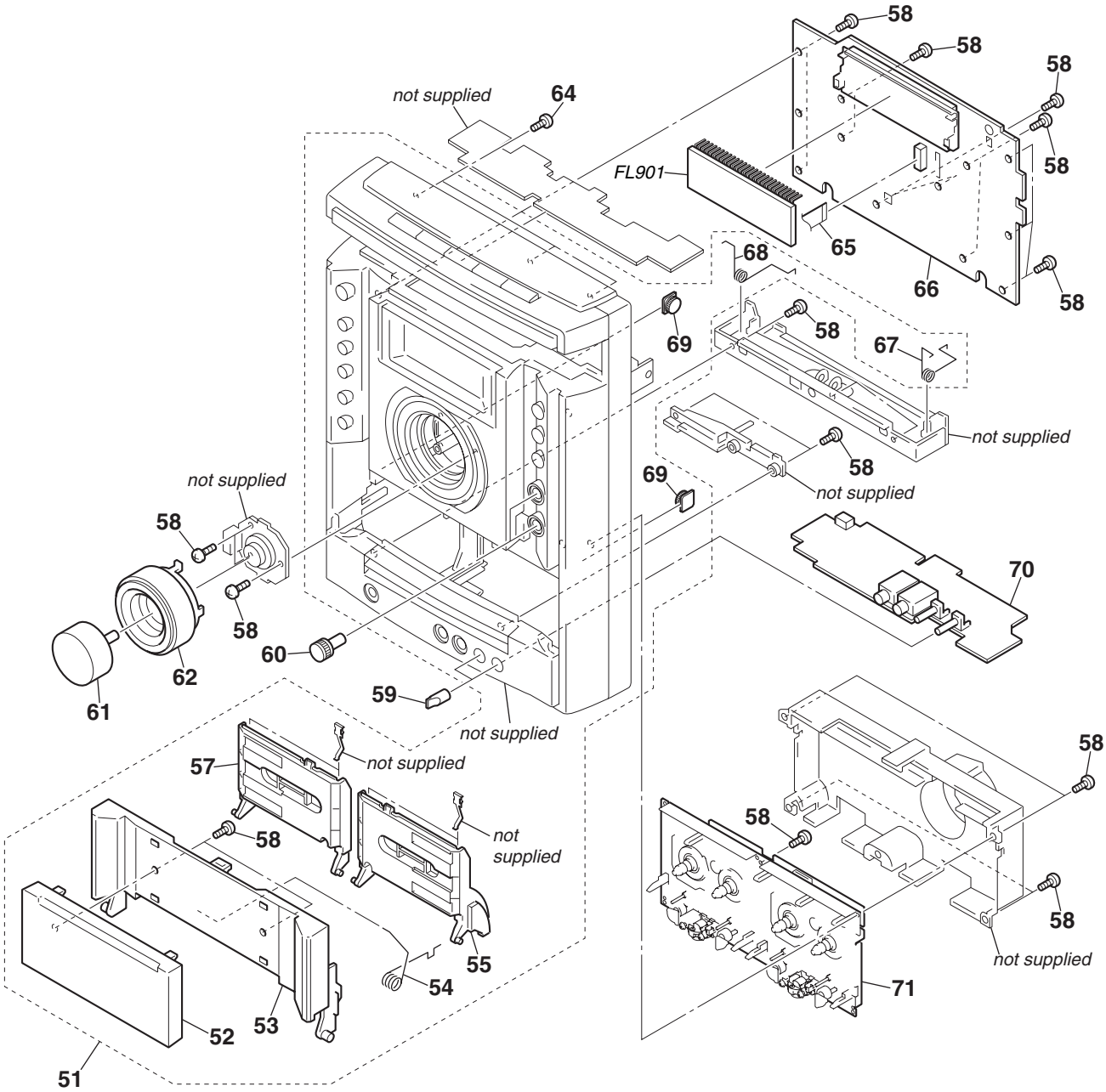

Ref. No.	Part No.	Description	Remarks
51	X-2025-397-1	FRONT PANEL ASSY (GNX60)	
51	X-2025-399-1	FRONT PANEL ASSY (GNX70)	
51	X-2025-429-1	FRONT PANEL ASSY (GX9900)	
52	2-342-128-01	ESCUTHEON (LID)	
53	2-342-108-01	LID (TC)	
54	2-342-134-01	SPRING (LID)	
55	2-342-111-01	HOLDER (TC-R)	
57	2-342-110-01	HOLDER (TC-L)	
58	3-087-053-01	+BVTP2.6 (3CR)	
59	4-224-578-21	KNOB (MIC)	
60	2-342-104-01	KNOB (AMS)	

Ref. No.	Part No.	Description	Remarks
61	4-252-575-01	KNOB VOL	
62	X-2025-430-1	KNOB JOG ASSY	
64	3-077-331-21	+BV3 (3-CR)	
65	1-828-992-11	WIRE (FLAT TYPE) (17 CORE)	
66	A-1089-463-A	PANEL BOARD, COMPLETE	
67	2-342-136-01	SPRING (R)	
68	2-342-135-01	SPRING (L)	
69	4-224-104-11	DAMPER	
70	A-1089-466-A	MIC BOARD, COMPLETE	
71	1-797-165-11	DECK, MECHANICAL (CMAT5Z2)	
FL901	1-519-794-21	VACUUM FLUORESCENT DISPLAYS	

8-3. CHASSIS SECTION

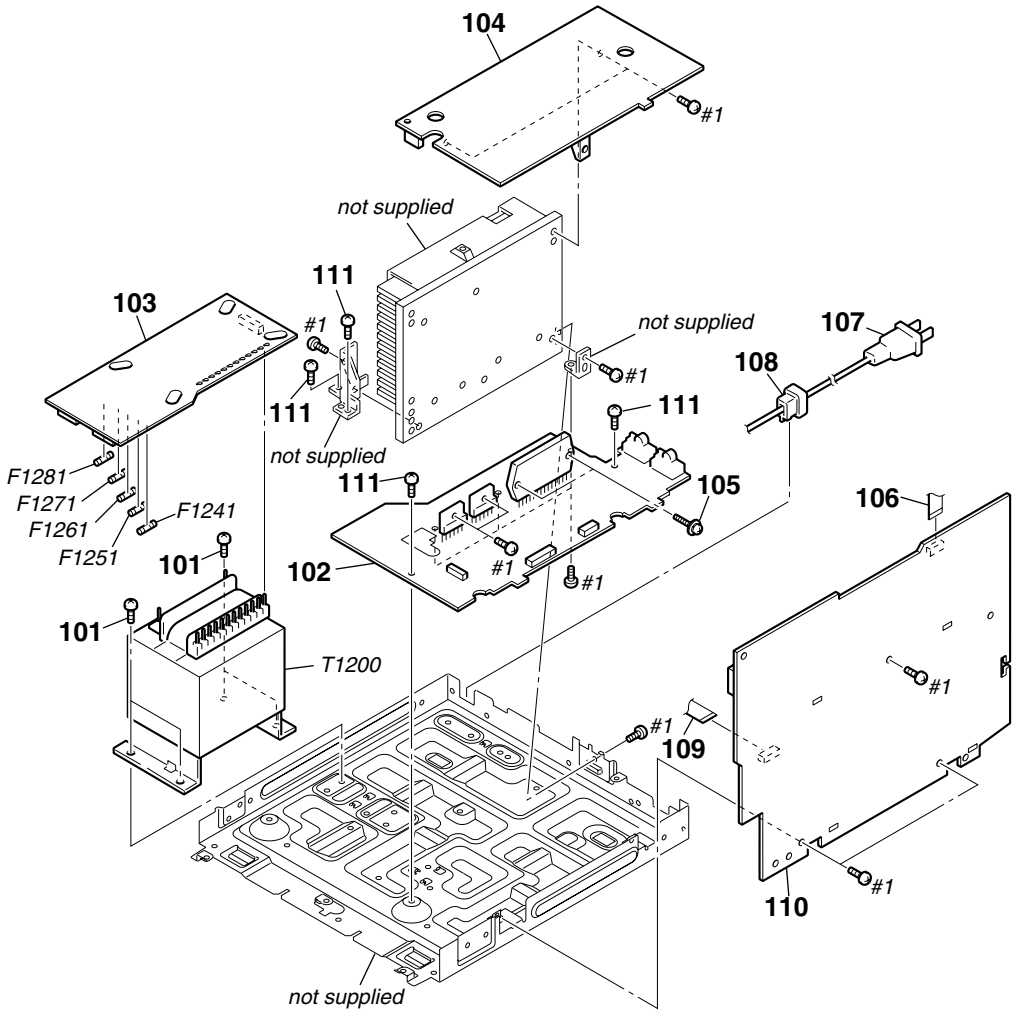

Ref. No.	Part No.	Description	Remarks
101	4-900-386-01	SCREW	
102	A-1089-504-A	PA BOARD, COMPLETE (GNX60: E3, AUS)	
102	A-1089-530-A	PA BOARD, COMPLETE (GNX70: E3, AUS)	
102	A-1089-586-A	PA BOARD, COMPLETE (GX9900)	
102	A-1110-893-A	PA BOARD, COMPLETE (GNX60: E2, E51, AR)	
102	A-1110-912-A	PA BOARD, COMPLETE (GNX70: E2, E51)	
103	A-1089-507-A	TRANS BOARD, COMPLETE (GNX60/GNX70)	
103	A-1089-588-A	TRANS BOARD, COMPLETE (GX9900)	
104	A-1089-321-A	SURROUND BOARD, COMPLETE	
105	3-905-609-31	SCREW (TRANSISTOR)	
106	1-828-956-11	WIRE (FLAT TYPE) (9 CORE)	
⚠107	1-777-071-53	CORD, POWER (E51)	
⚠107	1-783-820-11	CORD, POWER (GX9900)	
⚠107	1-783-941-12	CORD, POWER (AR)	
⚠107	1-827-295-22	CORD, POWER (AUS)	
⚠107	1-829-627-31	POWER-SUPPLY CORD (E2, E3)	
* 108	3-703-244-00	BUSHING (2104), CORD (US, E51, AR, AUS)	
108	3-703-571-11	BUSHING (S) (4516), CORD (E2, E3)	
109	1-828-972-11	WIRE (FLAT TYPE) (13 CORE)	
110	A-1089-297-A	MAIN BOARD, COMPLETE (GNX60: E2)	
110	A-1089-299-A	MAIN BOARD, COMPLETE (GNX70: E2)	
110	A-1089-301-A	MAIN BOARD, COMPLETE (GX9900)	
110	A-1105-022-A	MAIN BOARD, COMPLETE (GNX60: E3)	
110	A-1105-023-A	MAIN BOARD, COMPLETE (GNX60: E51)	
110	A-1105-024-A	MAIN BOARD, COMPLETE (AR)	
110	A-1105-025-A	MAIN BOARD, COMPLETE (GNX60: AUS)	

Ref. No.	Part No.	Description	Remarks
110	A-1105-026-A	MAIN BOARD, COMPLETE (GNX70: E3)	
110	A-1105-027-A	MAIN BOARD, COMPLETE (GNX70: E51)	
110	A-1105-028-A	MAIN BOARD, COMPLETE (GNX70: AUS)	
111	3-077-331-21	+BV3 (3-CR)	
⚠F1241	1-576-537-12	FUSE, GLASS TUBE (DIA.5) (T8AL/125V)	(GX9900)
⚠F1241	1-576-655-12	FUSE, GLASS TUBE (DIA. 5) (T8AL/250V)	(GNX60/GNX70)
⚠F1251	1-576-537-12	FUSE, GLASS TUBE (DIA.5) (T8AL/125V)	(GX9900)
⚠F1251	1-576-655-12	FUSE, GLASS TUBE (DIA. 5) (T8AL/250V)	(GNX60/GNX70)
⚠F1261	1-576-537-12	FUSE, GLASS TUBE (DIA.5) (T8AL/125V)	(GX9900)
⚠F1261	1-576-655-12	FUSE, GLASS TUBE (DIA. 5) (T8AL/250V)	(GNX60/GNX70)
⚠F1271	1-576-537-12	FUSE, GLASS TUBE (DIA.5) (T8AL/125V)	(GX9900)
⚠F1271	1-576-655-12	FUSE, GLASS TUBE (DIA. 5) (T8AL/250V)	(GNX60/GNX70)
⚠F1281	1-533-451-12	FUSE, GLASS TUBE (DIA. 5) (T3.15AL/125V)	(GX9900)
⚠F1281	1-533-470-12	FUSE, GLASS TUBE (DIA. 5) (T3.15AL/250V)	(GNX60/GNX70)
⚠T1200	1-443-542-11	POWER TRANSFORMER (GNX60)	
⚠T1200	1-443-543-11	POWER TRANSFORMER (GNX70)	
⚠T1200	1-443-544-11	POWER TRANSFORMER (GX9900)	
#1	7-685-647-79	SCREW +BVTP 3X10 TYPE2 IT-3	

8-4. CD MECHANISM DECK SECTION-1 (CDM74-F1BD81)

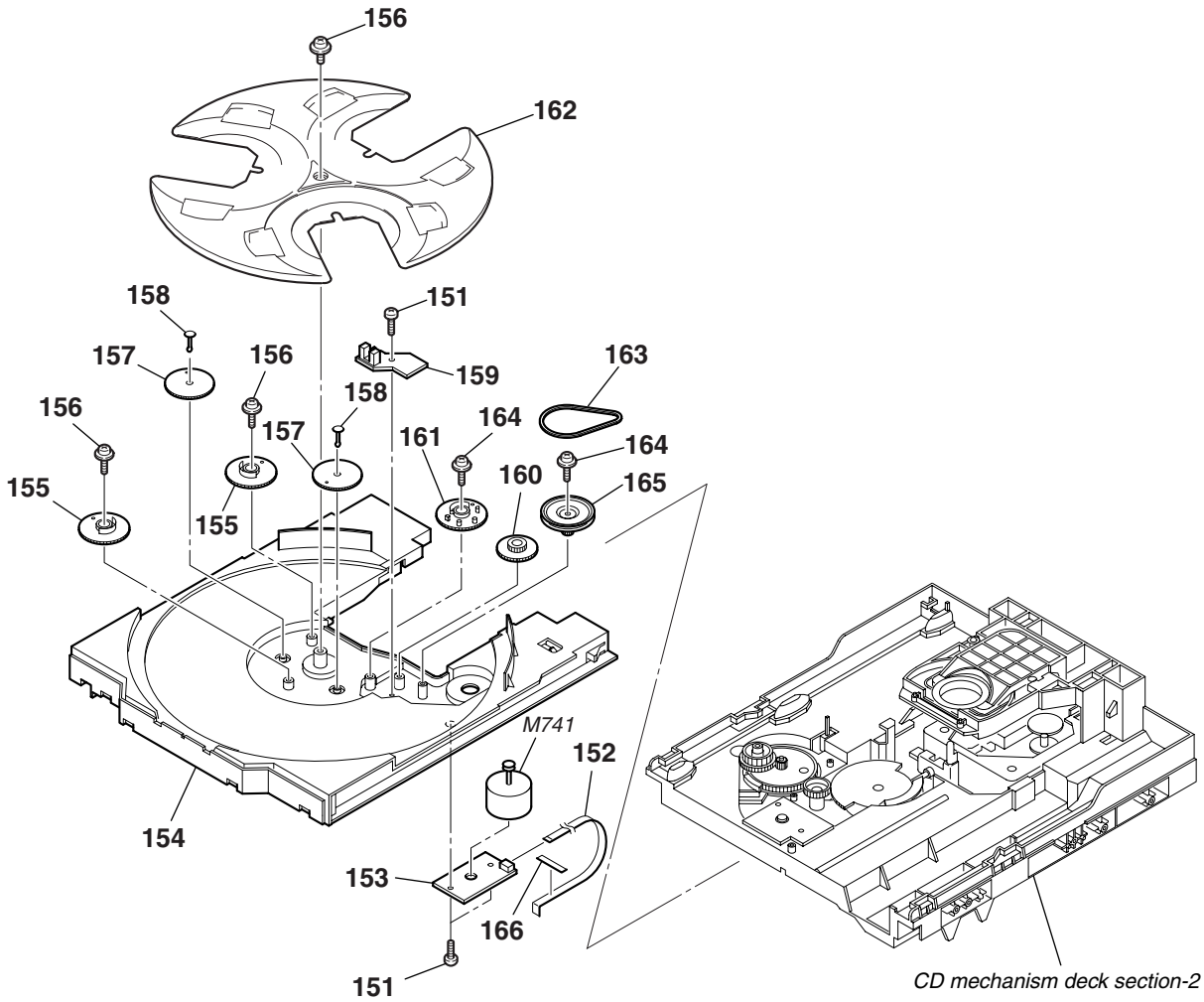

Ref. No.	Part No.	Description	Remarks
151	4-218-253-32	SCREW (M2.6), +BTTP	
152	1-776-182-11	WIRE (FLAT TYPE) (5 CORE)	
153	1-687-134-12	MOTOR (TB) BOARD	
154	4-243-815-01	TABLE (LOADING)	
155	4-245-571-02	GEAR (STOPPER)	
156	4-218-252-61	SCREW (+PTPWH M2.6), FLOATING	
157	4-245-570-01	GEAR (JOINT)	
158	4-245-572-01	BUSHING (GEAR)	
159	1-687-132-12	SENSOR BOARD	
160	4-243-820-01	GEAR (TABLE)	
161	4-243-819-01	GEAR (GENEVA)	
162	4-243-816-01	TRAY	
163	4-243-823-01	BELT (TABLE)	
164	4-985-672-01	SCREW (+PTPWH M2.6), FLOATING	
165	4-243-821-01	PULLEY (TABLE)	
166	3-231-598-01	SHEET (BA)	
M741	A-4723-963-A	MOTOR ASSY, TABLE	

8-5. CD MECHANISM DECK SECTION-2 (CDM74-F1BD81)

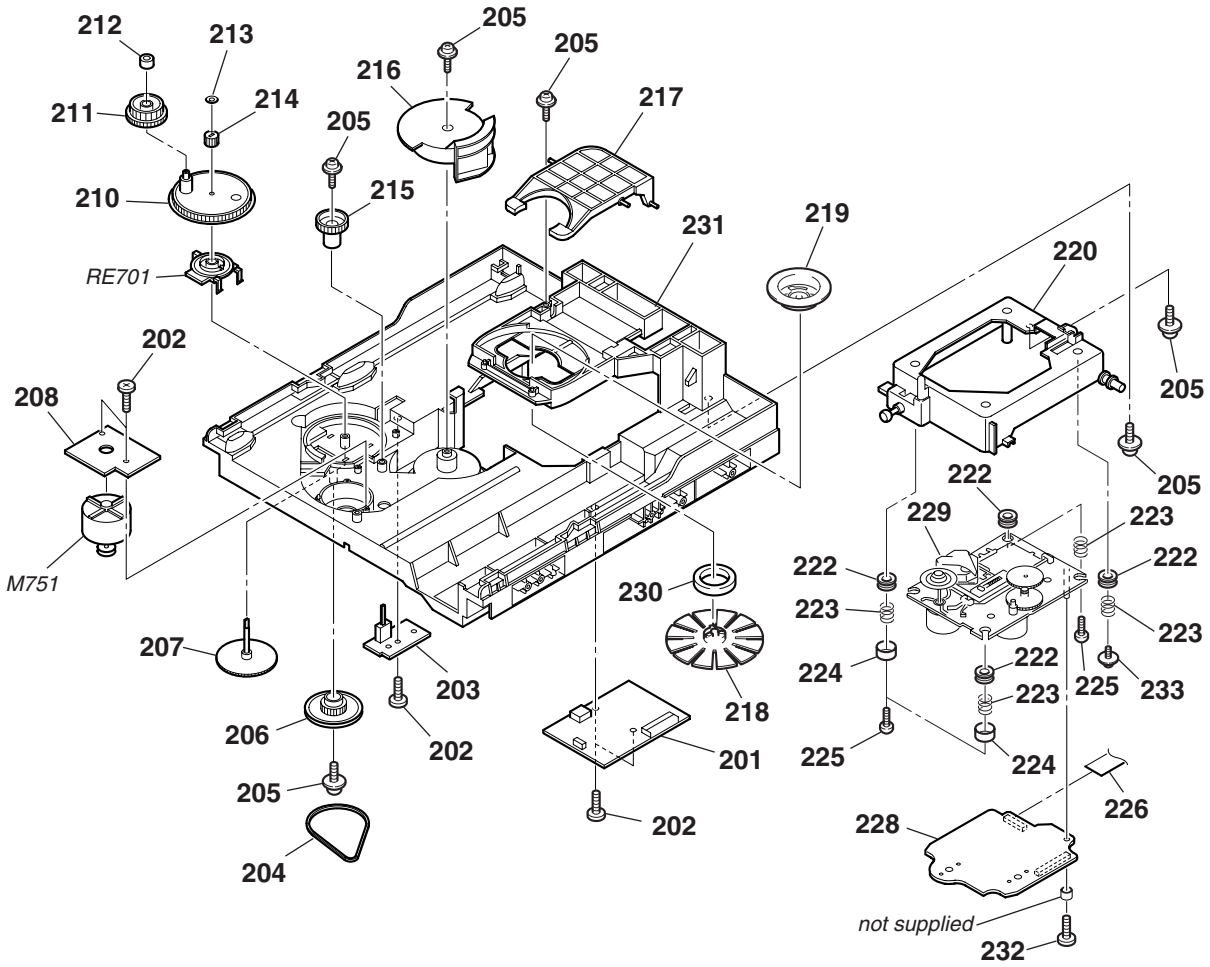

Ref. No.	Part No.	Description	Remarks
201	1-687-135-12	DRIVER BOARD	
202	4-218-253-52	SCREW (M2.6), +BTTP	
203	1-687-669-12	SW BOARD	
204	4-244-034-01	BELT (LOADING)	
205	4-218-252-52	SCREW (+PTPWH M2.6), FLOATING	
206	4-225-844-01	GEAR (LOADING A)	
207	4-224-613-01	GEAR (SHAFT)	
208	1-687-133-12	MOTOR (LD) BOARD	
210	4-244-108-01	GEAR, SWING	
211	4-224-609-01	GEAR (LOADING C)	
212	4-224-608-01	COLLAR, SWING	
213	3-016-533-01	WASHER (FR), STOPPER	
214	4-224-611-01	GEAR (LOADING B)	
215	4-224-606-01	GEAR (RV)	
216	4-243-818-01	GEAR (U/D)	
217	4-243-822-02	LEVER (LIFTER)	

Ref. No.	Part No.	Description	Remarks
218	X-4955-774-2	PULLEY (SM) ASSY, CHUCKING	
219	4-221-688-01	PULLEY (B), CHUCKING	
220	X-4955-536-1	HOLDER (213) ASSY	
222	4-227-549-11	INSULATOR	
223	4-227-045-11	SPRING (INSULATOR), COIL	
224	4-231-151-01	STOPPER (BU)	
225	4-218-253-42	SCREW (M2.6), +BTTP	
226	1-827-992-11	WIRE (FLAT TYPE) (16 CORE)	
228	A-4751-045-A	CD BOARD, COMPLETE	
⚠229	8-820-244-01	OPTICAL PICK-UP KSM-215DCP/C2NP	
230	1-471-035-11	MAGNET ASSY	
231	4-243-817-22	CHASSIS	
232	3-087-053-01	+BVTP2.6 (3CR)	
233	4-985-672-01	SCREW (+PTPWH M2.6), FLOATING	
M751	A-4737-553-A	MOTOR ASSY, LOADING	
RE701	1-477-680-12	ENCODER, ROTARY	

SECTION 9
ELECTRICAL PARTS LIST

CD

NOTE:

- Due to standardization, replacements in the parts list may be different from the parts specified in the diagrams or the components used on the set.
- -XX, -X mean standardized parts, so they may have some difference from the original one.
- Items marked "*" are not stocked since they are seldom required for routine service. Some delay should be anticipated when ordering these items.
- CAPACITORS:
  uF: μF
- RESISTORS
  All resistors are in ohms.
  METAL: metal-film resistor
  METAL OXIDE: Metal Oxide-film resistor
  F: nonflammable
- COILS
  uH: μH
- SEMICONDUCTORS
  In each case, u: μ, for example:
  uA...: μA... , uPA... , μPA... , uPB... , μPB... , uPC... , μPC... , uPD..., μPD...
- Abbreviation
  AR : Argentine model
  AUS : Australian model
  E2 : 120V AC Area in E model
  E3 : 240V AC Area in E model
  E51 : Chilean and Peruvian model

The components identified by mark ⚠ or dotted line with mark ⚠ are critical for safety.
Replace only with part number specified.

When indicating parts by reference number, please include the board.

Ref. No.	Part No.	Description			Remarks
	A-4751-045-A	CD BOARD, COMPLETE			
		**********			
		< CAPACITOR >			
C10	1-165-989-11	CERAMIC CHIP	10uF	10%	6.3V
C11	1-165-989-11	CERAMIC CHIP	10uF	10%	6.3V
C14	1-164-360-11	CERAMIC CHIP	0.1uF		16V
C15	1-164-360-11	CERAMIC CHIP	0.1uF		16V
C16	1-115-156-11	CERAMIC CHIP	1uF		10V
C17	1-126-246-11	ELECT CHIP	220uF	20%	4V
C18	1-162-964-11	CERAMIC CHIP	0.001uF	10%	50V
C111	1-162-967-11	CERAMIC CHIP	0.0033uF	10%	50V
C112	1-164-315-11	CERAMIC CHIP	470PF	5%	50V
C113	1-162-967-11	CERAMIC CHIP	0.0033uF	10%	50V
C114	1-164-315-11	CERAMIC CHIP	470PF	5%	50V
C115	1-164-360-11	CERAMIC CHIP	0.1uF		16V
C116	1-128-995-21	ELECT CHIP	100uF	20%	10V
C122	1-107-826-11	CERAMIC CHIP	0.1uF	10%	16V
C123	1-107-826-11	CERAMIC CHIP	0.1uF	10%	16V
C124	1-162-959-11	CERAMIC CHIP	330PF	5%	50V
C125	1-164-360-11	CERAMIC CHIP	0.1uF		16V
C131	1-162-927-11	CERAMIC CHIP	100PF	5%	50V
C132	1-117-863-11	CERAMIC CHIP	0.47uF	10%	6.3V
C133	1-162-970-11	CERAMIC CHIP	0.01uF	10%	25V
C134	1-164-360-11	CERAMIC CHIP	0.1uF		16V
C141	1-107-826-11	CERAMIC CHIP	0.1uF	10%	16V
C142	1-162-965-11	CERAMIC CHIP	0.0015uF	10%	50V
C143	1-164-360-11	CERAMIC CHIP	0.1uF		16V
C151	1-128-995-21	ELECT CHIP	100uF	20%	10V
C161	1-164-360-11	CERAMIC CHIP	0.1uF		16V
C162	1-164-360-11	CERAMIC CHIP	0.1uF		16V
C163	1-164-360-11	CERAMIC CHIP	0.1uF		16V
C171	1-162-919-11	CERAMIC CHIP	22PF	5%	50V
C172	1-162-920-11	CERAMIC CHIP	27PF	5%	50V
C174	1-164-360-11	CERAMIC CHIP	0.1uF		16V
C181	1-164-360-11	CERAMIC CHIP	0.1uF		16V
C182	1-164-360-11	CERAMIC CHIP	0.1uF		16V
C183	1-124-778-00	ELECT CHIP	22uF	20%	6.3V
C184	1-124-778-00	ELECT CHIP	22uF	20%	6.3V
C185	1-164-315-11	CERAMIC CHIP	470PF	5%	50V
C186	1-164-315-11	CERAMIC CHIP	470PF	5%	50V
C194	1-164-360-11	CERAMIC CHIP	0.1uF		16V
C195	1-164-360-11	CERAMIC CHIP	0.1uF		16V
C196	1-164-360-11	CERAMIC CHIP	0.1uF		16V
C201	1-128-995-21	ELECT CHIP	100uF	20%	10V
C203	1-128-995-21	ELECT CHIP	100uF	20%	10V
C209	1-162-970-11	CERAMIC CHIP	0.01uF	10%	25V
C210	1-107-826-11	CERAMIC CHIP	0.1uF	10%	16V
C211	1-164-230-11	CERAMIC CHIP	220PF	5%	50V
C212	1-162-919-11	CERAMIC CHIP	22PF	5%	50V
C213	1-162-919-11	CERAMIC CHIP	22PF	5%	50V
C251	1-162-969-11	CERAMIC CHIP	0.0068uF	10%	25V
C252	1-164-360-11	CERAMIC CHIP	0.1uF		16V
C255	1-164-360-11	CERAMIC CHIP	0.1uF		16V
C257	1-164-360-11	CERAMIC CHIP	0.1uF		16V
C258	1-164-360-11	CERAMIC CHIP	0.1uF		16V
C259	1-164-360-11	CERAMIC CHIP	0.1uF		16V
C260	1-128-394-11	ELECT CHIP	220uF	20%	10V
C302	1-164-360-11	CERAMIC CHIP	0.1uF		16V
C303	1-164-360-11	CERAMIC CHIP	0.1uF		16V
C305	1-126-246-11	ELECT CHIP	220uF	20%	4V
C306	1-164-360-11	CERAMIC CHIP	0.1uF		16V
C307	1-164-360-11	CERAMIC CHIP	0.1uF		16V
C308	1-126-208-21	ELECT CHIP	47uF	20%	4V
C309	1-164-360-11	CERAMIC CHIP	0.1uF		16V
C310	1-164-360-11	CERAMIC CHIP	0.1uF		16V
C311	1-164-360-11	CERAMIC CHIP	0.1uF		16V
C312	1-164-360-11	CERAMIC CHIP	0.1uF		16V
C313	1-164-360-11	CERAMIC CHIP	0.1uF		16V
C314	1-126-208-21	ELECT CHIP	47uF	20%	4V
C315	1-107-826-11	CERAMIC CHIP	0.1uF	10%	16V
C316	1-162-966-11	CERAMIC CHIP	0.0022uF	10%	50V
C317	1-162-970-11	CERAMIC CHIP	0.01uF	10%	25V
C318	1-162-970-11	CERAMIC CHIP	0.01uF	10%	25V
C320	1-216-864-11	SHORT CHIP	0		
		< CONNECTOR >			
CN101	1-770-425-11	CONNECTOR, FFC/FPC 16P			
CN201	1-818-350-11	CONNECTOR (FFC) 27P			
		< FERRITE BEAD >			
FB301	1-500-445-21	FERRITE, EMI (SMD) (2012)			

CD | CD-SW | DRIVER

Ref. No.	Part No.	Description			Remarks
		< IC >			
IC101	8-752-425-12	IC CXD3059AR			
IC251	6-705-808-01	IC BA5947FM-E2			
IC301	6-705-365-01	IC TC94A34FG-002			
IC303	6-705-807-01	IC BH15FB1WG			
		< TRANSISTOR >			
Q10	6-551-120-01	TRANSISTOR 2SA2119K			
		< RESISTOR >			
R10	1-216-791-11	METAL CHIP	3.3	5%	1/10W
R11	1-216-864-11	SHORT CHIP	0		
R12	1-216-845-11	METAL CHIP	100K	5%	1/10W
R13	1-218-446-11	METAL CHIP	1	5%	1/10W
R111	1-216-821-11	METAL CHIP	1K	5%	1/10W
R112	1-216-835-11	METAL CHIP	15K	5%	1/10W
R113	1-216-821-11	METAL CHIP	1K	5%	1/10W
R114	1-216-835-11	METAL CHIP	15K	5%	1/10W
R121	1-216-835-11	METAL CHIP	15K	5%	1/10W
R131	1-216-857-11	METAL CHIP	1M	5%	1/10W
R132	1-216-833-11	METAL CHIP	10K	5%	1/10W
R133	1-216-848-11	METAL CHIP	180K	5%	1/10W
R141	1-216-829-11	METAL CHIP	4.7K	5%	1/10W
R142	1-216-821-11	METAL CHIP	1K	5%	1/10W
R143	1-216-827-11	METAL CHIP	3.3K	5%	1/10W
R151	1-216-864-11	SHORT CHIP	0		
R161	1-216-809-11	METAL CHIP	100	5%	1/10W
R162	1-216-841-11	METAL CHIP	47K	5%	1/10W
R163	1-216-809-11	METAL CHIP	100	5%	1/10W
R165	1-216-864-11	SHORT CHIP	0		
R171	1-216-817-11	METAL CHIP	470	5%	1/10W
R172	1-216-857-11	METAL CHIP	1M	5%	1/10W
R173	1-216-295-91	SHORT CHIP	0		
R181	1-216-809-11	METAL CHIP	100	5%	1/10W
R182	1-216-809-11	METAL CHIP	100	5%	1/10W
R191	1-216-864-11	SHORT CHIP	0		
R201	1-500-445-21	FERRITE, EMI (SMD) (2012)			
R203	1-216-864-11	SHORT CHIP	0		
R204	1-500-445-21	FERRITE, EMI (SMD) (2012)			
R205	1-216-864-11	SHORT CHIP	0		
R251	1-216-833-11	METAL CHIP	10K	5%	1/10W
R252	1-216-837-11	METAL CHIP	22K	5%	1/10W
R253	1-216-833-11	METAL CHIP	10K	5%	1/10W
R301	1-216-845-11	METAL CHIP	100K	5%	1/10W
R302	1-216-833-11	METAL CHIP	10K	5%	1/10W
R303	1-216-845-11	METAL CHIP	100K	5%	1/10W
R305	1-216-845-11	METAL CHIP	100K	5%	1/10W
R306	1-216-864-11	SHORT CHIP	0		
R307	1-216-833-11	METAL CHIP	10K	5%	1/10W
R313	1-216-813-11	METAL CHIP	220	5%	1/10W
R351	1-216-809-11	METAL CHIP	100	5%	1/10W
R352	1-216-809-11	METAL CHIP	100	5%	1/10W
R353	1-216-809-11	METAL CHIP	100	5%	1/10W
R354	1-216-809-11	METAL CHIP	100	5%	1/10W
R401	1-216-809-11	METAL CHIP	100	5%	1/10W
R402	1-216-809-11	METAL CHIP	100	5%	1/10W
R403	1-216-809-11	METAL CHIP	100	5%	1/10W
R404	1-216-809-11	METAL CHIP	100	5%	1/10W
R405	1-216-809-11	METAL CHIP	100	5%	1/10W
R406	1-216-809-11	METAL CHIP	100	5%	1/10W
R407	1-216-809-11	METAL CHIP	100	5%	1/10W
R408	1-216-809-11	METAL CHIP	100	5%	1/10W
R409	1-216-809-11	METAL CHIP	100	5%	1/10W
R410	1-216-809-11	METAL CHIP	100	5%	1/10W
R411	1-216-809-11	METAL CHIP	100	5%	1/10W
R412	1-216-809-11	METAL CHIP	100	5%	1/10W
R419	1-216-809-11	METAL CHIP	100	5%	1/10W
R502	1-216-864-11	SHORT CHIP	0		
		< SWITCH >			
S101	1-771-853-11	SWITCH DETECTION (LIMIT)			
		< VIBRATOR >			
X171	1-767-408-21	VIBRATOR, CRYSTAL (16.9MHz)			
**********					
		CD-SW BOARD			
		**********			
		< RESISTOR >			
R1169	1-216-817-11	METAL CHIP	470	5%	1/10W
R1171	1-216-823-11	METAL CHIP	1.5K	5%	1/10W
R1172	1-216-823-11	METAL CHIP	1.5K	5%	1/10W
R1173	1-216-821-11	METAL CHIP	1K	5%	1/10W
R1174	1-216-819-11	METAL CHIP	680	5%	1/10W
		< SWITCH >			
S1156	1-762-875-21	SWITCH, KEYBOARD (DISC 1)			
S1157	1-762-875-21	SWITCH, KEYBOARD (DISC 2)			
S1158	1-762-875-21	SWITCH, KEYBOARD (DISC 3)			
S1159	1-762-875-21	SWITCH, KEYBOARD (EX-CHANGE/DISC SKIP)			
S1160	1-762-875-21	SWITCH, KEYBOARD (⏏ OPEN/CLOSE)			
**********					
	1-687-135-12	DRIVER BOARD			
		**********			
		< CAPACITOR >			
C715	1-126-933-11	ELECT	100uF	20%	16V
C731	1-126-964-11	ELECT	10uF	20%	50V
C735	1-164-159-11	CERAMIC	0.1uF		50V
C736	1-164-159-11	CERAMIC	0.1uF		50V
C737	1-164-159-11	CERAMIC	0.1uF		50V
C741	1-162-306-11	CERAMIC	0.01uF	20%	16V
C751	1-162-306-11	CERAMIC	0.01uF	20%	16V
C752	1-164-159-11	CERAMIC	0.1uF		50V
		< CONNECTOR >			
CN701	1-785-338-11	PIN, CONNECTOR (LIGHT ANGLE) 12P			
CN702	1-784-766-11	CONNECTOR, FFC 5P			
* CN703	1-564-720-11	PIN, CONNECTOR (SMALL TYPE) 4P			
CN704	1-785-328-11	PIN, CONNECTOR (LIGHT ANGRE) 2P			
		< DIODE >			
D701	8-719-947-16	DIODE MTZJ-T-72-5.1A			
D711	8-719-983-66	DIODE MTZJ-T-72-3.6B			

DRIVER JOG MAIN

Ref. No.	Part No.	Description			Remarks
		< IC >			
IC701	8-759-598-69	IC BA6956AN			
IC712	8-759-598-69	IC BA6956AN			
		< TRANSISTOR >			
Q731	8-729-029-66	TRANSISTOR DTC114ESA			
		< RESISTOR >			
R701	1-249-413-11	CARBON	470	5%	1/4W
R702	1-247-807-31	CARBON	100	5%	1/4W
R711	1-247-831-91	CARBON	1K	5%	1/4W
R712	1-247-847-91	CARBON	4.7K	5%	1/4W
R713	1-247-863-91	CARBON	22K	5%	1/4W
R721	1-247-847-91	CARBON	4.7K	5%	1/4W
R722	1-247-847-91	CARBON	4.7K	5%	1/4W
R723	1-247-847-91	CARBON	4.7K	5%	1/4W
R731	1-247-807-31	CARBON	100	5%	1/4W
R732	1-249-429-11	CARBON	10K	5%	1/4W
R733	1-247-831-91	CARBON	1K	5%	1/4W
R734	1-249-430-11	CARBON	12K	5%	1/4W
R735	1-247-807-31	CARBON	100	5%	1/4W
R751	1-247-847-91	CARBON	4.7K	5%	1/4W

****

JOG BOARD
****

		< CAPACITOR >			
C1150	1-162-964-11	CERAMIC CHIP	0.001uF	10%	50V
		< CONNECTOR >			
* CNS903	1-562-573-11	SOCKET, CONNECTOR 8P			
		< DIODE >			
D919	8-719-071-44	DIODE SELS5223C-TP15 (VOL 2)			
D920	8-719-071-44	DIODE SELS5223C-TP15 (VOL 3)			
D921	8-719-071-44	DIODE SELS5223C-TP15 (VOL 4)			
D922	8-719-071-44	DIODE SELS5223C-TP15 (VOL 5)			
D923	8-719-071-44	DIODE SELS5223C-TP15 (VOL 6)			
D924	8-719-071-44	DIODE SELS5223C-TP15 (VOL 1)			
		< JUMPER RESISTOR >			
JR904	1-216-296-11	SHORT CHIP	0		
JR905	1-216-864-11	SHORT CHIP	0		
		< TRANSISTOR >			
Q911	8-729-027-43	TRANSISTOR DTC114EKA-T146			
Q912	8-729-027-43	TRANSISTOR DTC114EKA-T146			
Q913	8-729-027-43	TRANSISTOR DTC114EKA-T146			
		< RESISTOR >			
R1138	1-216-820-11	METAL CHIP	820	5%	1/10W
R1139	1-216-820-11	METAL CHIP	820	5%	1/10W
R1140	1-216-820-11	METAL CHIP	820	5%	1/10W
R1144	1-216-820-11	METAL CHIP	820	5%	1/10W
R1145	1-216-820-11	METAL CHIP	820	5%	1/10W
R1146	1-216-820-11	METAL CHIP	820	5%	1/10W
R1156	1-216-821-11	METAL CHIP	1K	5%	1/10W
R1157	1-216-820-11	METAL CHIP	820	5%	1/10W
R1158	1-216-820-11	METAL CHIP	820	5%	1/10W
R1159	1-216-820-11	METAL CHIP	820	5%	1/10W
R1190	1-216-809-11	METAL CHIP	100	5%	1/10W
R1191	1-216-809-11	METAL CHIP	100	5%	1/10W
R1192	1-216-809-11	METAL CHIP	100	5%	1/10W
		< SWITCH >			
S1161	1-479-203-11	ENCODER (ROTARY) (OPERATION DIAL)			

****

	A-1089-297-A	MAIN BOARD, COMPLETE (GNX60: E2)			
	A-1089-299-A	MAIN BOARD, COMPLETE (GNX70: E2)			
	A-1089-301-A	MAIN BOARD, COMPLETE (GX9900)			
	A-1105-022-A	MAIN BOARD, COMPLETE (GNX60: E3)			
	A-1105-023-A	MAIN BOARD, COMPLETE (GNX60: E51)			
	A-1105-024-A	MAIN BOARD, COMPLETE (AR)			
	A-1105-025-A	MAIN BOARD, COMPLETE (GNX60: AUS)			
	A-1105-026-A	MAIN BOARD, COMPLETE (GNX70: E3)			
	A-1105-027-A	MAIN BOARD, COMPLETE (GNX70: E51)			
	A-1105-028-A	MAIN BOARD, COMPLETE (GNX70: AUS)			
		**********			
	7-685-646-79	SCREW +BVTP 3X8 TYPE2 IT-3			
		< CAPACITOR >			
C100	1-104-658-91	ELECT	100uF	20%	10V
C102	1-126-964-11	ELECT	10uF	20%	50V
C103	1-126-964-11	ELECT	10uF	20%	50V
C104	1-126-964-11	ELECT	10uF	20%	50V
C105	1-126-964-11	ELECT	10uF	20%	50V
C106	1-136-157-00	FILM	0.022uF	5%	50V
C107	1-136-157-00	FILM	0.022uF	5%	50V
C108	1-136-159-00	FILM	0.033uF	5%	50V
C109	1-126-960-11	ELECT	1uF	20%	50V
C110	1-162-974-11	CERAMIC CHIP	0.01uF		50V
C111	1-126-964-11	ELECT	10uF	20%	50V
C112	1-136-170-00	FILM	0.27uF	5%	50V
C113	1-136-170-00	FILM	0.27uF	5%	50V
C114	1-126-964-11	ELECT	10uF	20%	50V
C115	1-164-156-11	CERAMIC CHIP	0.1uF		25V
C116	1-126-923-91	ELECT	220uF	20%	10V
C121	1-162-957-11	CERAMIC CHIP	220PF	5%	50V
C122	1-162-957-11	CERAMIC CHIP	220PF	5%	50V
C130	1-126-964-11	ELECT	10uF	20%	50V
C131	1-126-959-11	ELECT	0.47uF	20%	50V
C140	1-136-495-11	FILM	0.068uF	5%	50V
C149	1-164-156-11	CERAMIC CHIP	0.1uF		25V
C150	1-126-964-11	ELECT	10uF	20%	50V
C152	1-126-964-11	ELECT	10uF	20%	50V
C153	1-126-964-11	ELECT	10uF	20%	50V
C154	1-126-964-11	ELECT	10uF	20%	50V
C155	1-126-964-11	ELECT	10uF	20%	50V
C156	1-136-157-00	FILM	0.022uF	5%	50V
C157	1-136-157-00	FILM	0.022uF	5%	50V
C158	1-136-159-00	FILM	0.033uF	5%	50V
C159	1-126-960-11	ELECT	1uF	20%	50V

MAIN

Ref. No.	Part No.	Description			Remarks
C160	1-162-974-11	CERAMIC CHIP	0.01uF		50V
C161	1-126-964-11	ELECT	10uF	20%	50V
C162	1-136-170-00	FILM	0.27uF	5%	50V
C163	1-136-170-00	FILM	0.27uF	5%	50V
C180	1-126-963-11	ELECT	4.7uF	20%	50V
C181	1-126-963-11	ELECT	4.7uF	20%	50V
C210	1-164-156-11	CERAMIC CHIP	0.1uF		25V (GNX60/GNX70)
C211	1-104-658-91	ELECT	100uF	20%	10V (GNX60/GNX70)
C250	1-126-964-11	ELECT	10uF	20%	50V
C251	1-126-964-11	ELECT	10uF	20%	50V
C260	1-162-957-11	CERAMIC CHIP	220PF	5%	50V
C261	1-162-957-11	CERAMIC CHIP	220PF	5%	50V
C262	1-162-957-11	CERAMIC CHIP	220PF	5%	50V
C263	1-162-957-11	CERAMIC CHIP	220PF	5%	50V
C264	1-165-647-91	CERAMIC CHIP	0.47uF	10%	6.3V
C280	1-126-964-11	ELECT	10uF	20%	50V
C281	1-126-964-11	ELECT	10uF	20%	50V
C301	1-136-967-11	FILM	0.012uF	5%	100V
C303	1-136-497-81	FILM	0.1uF	5%	50V
C304	1-126-964-11	ELECT	10uF	20%	50V
C305	1-126-960-11	ELECT	1uF	20%	50V
C306	1-126-961-11	ELECT	2.2uF	20%	50V
C307	1-126-964-11	ELECT	10uF	20%	50V
C308	1-126-925-91	ELECT	470uF	20%	10V
C309	1-126-947-11	ELECT	47uF	20%	35V
C310	1-126-964-11	ELECT	10uF	20%	50V
C311	1-126-964-11	ELECT	10uF	20%	50V
C312	1-126-964-11	ELECT	10uF	20%	50V
C314	1-162-966-11	CERAMIC CHIP	0.0022uF	10%	50V
C340	1-162-968-11	CERAMIC CHIP	0.0047uF	10%	50V
C341	1-162-968-11	CERAMIC CHIP	0.0047uF	10%	50V
C351	1-136-967-11	FILM	0.012uF	5%	100V
C353	1-136-497-81	FILM	0.1uF	5%	50V
C354	1-126-157-11	ELECT	10uF	20%	16V
C355	1-126-960-11	ELECT	1uF	20%	50V
C356	1-126-961-11	ELECT	2.2uF	20%	50V
C359	1-126-947-11	ELECT	47uF	20%	35V
C361	1-126-964-11	ELECT	10uF	20%	50V
C364	1-162-966-11	CERAMIC CHIP	0.0022uF	10%	50V
C370	1-137-150-11	FILM	0.01uF	5%	100V
C371	1-162-968-11	CERAMIC CHIP	0.0047uF	10%	50V
C372	1-162-964-11	CERAMIC CHIP	0.001uF	10%	50V
C373	1-162-964-11	CERAMIC CHIP	0.001uF	10%	50V
C374	1-126-947-11	ELECT	47uF	20%	35V
C375	1-162-963-11	CERAMIC CHIP	680PF	10%	50V
C376	1-162-963-11	CERAMIC CHIP	680PF	10%	50V
C377	1-162-974-11	CERAMIC CHIP	0.01uF		50V
C378	1-162-928-11	CERAMIC CHIP	120PF	5%	50V
C379	1-130-481-00	MYLAR	0.0068uF	5%	50V
C380	1-162-928-11	CERAMIC CHIP	120PF	5%	50V
C381	1-164-670-11	CERAMIC CHIP	1200PF	5%	16V
C382	1-164-670-11	CERAMIC CHIP	1200PF	5%	16V
C383	1-162-959-11	CERAMIC CHIP	330PF	5%	50V
C384	1-162-959-11	CERAMIC CHIP	330PF	5%	50V
C385	1-164-227-11	CERAMIC CHIP	0.022uF	10%	25V
C386	1-164-227-11	CERAMIC CHIP	0.022uF	10%	25V

Ref. No.	Part No.	Description			Remarks
C391	1-126-933-11	ELECT	100uF	20%	16V
C405	1-164-156-11	CERAMIC CHIP	0.1uF		25V
C410	1-162-919-11	CERAMIC CHIP	22PF	5%	50V
C411	1-162-919-11	CERAMIC CHIP	22PF	5%	50V
C412	1-164-156-11	CERAMIC CHIP	0.1uF		25V
C416	1-104-656-11	ELECT	2200uF	20%	6.3V
C419	1-162-960-11	CERAMIC CHIP	220PF	10%	50V
C429	1-162-923-11	CERAMIC CHIP	47PF	5%	50V
C430	1-162-923-11	CERAMIC CHIP	47PF	5%	50V
C462	1-104-658-91	ELECT	100uF	20%	10V
C464	1-162-970-11	CERAMIC CHIP	0.01uF	10%	25V
C497	1-164-156-11	CERAMIC CHIP	0.1uF		25V
C498	1-126-964-11	ELECT	10uF	20%	50V
C499	1-164-156-11	CERAMIC CHIP	0.1uF		25V
C501	1-126-964-11	ELECT	10uF	20%	50V
C502	1-136-497-81	FILM	0.1uF	5%	50V
C503	1-136-497-81	FILM	0.1uF	5%	50V
C507	1-164-156-11	CERAMIC CHIP	0.1uF		25V
C511	1-126-157-11	ELECT	10uF	20%	16V (E2, E3, E51)
C520	1-164-156-11	CERAMIC CHIP	0.1uF		25V
C521	1-162-960-11	CERAMIC CHIP	220PF	10%	50V
C522	1-162-960-11	CERAMIC CHIP	220PF	10%	50V
C523	1-162-960-11	CERAMIC CHIP	220PF	10%	50V
C524	1-162-960-11	CERAMIC CHIP	220PF	10%	50V
C525	1-162-960-11	CERAMIC CHIP	220PF	10%	50V
C534	1-164-156-11	CERAMIC CHIP	0.1uF		25V
C535	1-126-928-11	ELECT	3300uF	20%	10V
C537	1-164-156-11	CERAMIC CHIP	0.1uF		25V
C538	1-164-156-11	CERAMIC CHIP	0.1uF		25V
C539	1-164-156-11	CERAMIC CHIP	0.1uF		25V
C540	1-126-960-11	ELECT	1uF	20%	50V
C541	1-126-960-11	ELECT	1uF	20%	50V
C542	1-126-960-11	ELECT	1uF	20%	50V
C543	1-126-960-11	ELECT	1uF	20%	50V
C544	1-126-960-11	ELECT	1uF	20%	50V
C545	1-126-960-11	ELECT	1uF	20%	50V
C546	1-162-960-11	CERAMIC CHIP	220PF	10%	50V
C547	1-162-960-11	CERAMIC CHIP	220PF	10%	50V
C550	1-126-933-11	ELECT	100uF	20%	16V
C551	1-164-156-11	CERAMIC CHIP	0.1uF		25V
C552	1-126-961-11	ELECT	2.2uF	20%	50V
C553	1-126-942-61	ELECT	1000uF	20%	25V
C560	1-130-483-00	MYLAR	0.01uF	5%	50V
C561	1-130-483-00	MYLAR	0.01uF	5%	50V
C562	1-126-933-11	ELECT	100uF	20%	16V
C563	1-126-925-91	ELECT	470uF	20%	10V
C564	1-100-566-91	CERAMIC CHIP	0.1uF	10%	25V
C565	1-100-566-91	CERAMIC CHIP	0.1uF	10%	25V
C566	1-128-548-11	ELECT	4700uF	20%	25V
C567	1-100-566-91	CERAMIC CHIP	0.1uF	10%	25V
C568	1-126-916-11	ELECT	1000uF	20%	6.3V
C580	1-164-156-11	CERAMIC CHIP	0.1uF		25V
C581	1-164-156-11	CERAMIC CHIP	0.1uF		25V
		< CONNECTOR >			
* CN100	1-564-706-11	PIN, CONNECTOR (SMALL TYPE) 4P			
CN402	1-785-336-11	PIN, CONNECTOR (LIGHT ANGLE) 10P			

Ref. No.	Part No.	Description	Remarks
CN501	1-573-845-11	CONNECTOR, BOARD TO BOARD 13P	
* CN502	1-774-876-21	CONNECTOR, BOARD TO BOARD 8P	
* CN503	1-564-705-11	PIN, CONNECTOR (SMALL TYPE) 3P	
CN505	1-779-295-11	CONNECTOR, FFC (LIF (NON-ZIF)) 27P	
CN506	1-568-441-11	SOCKET, CONNECTOR 9P	
* CN507	1-564-710-11	PIN, CONNECTOR (SMALL TYPE) 8P	
* CN508	1-569-934-11	SOCKET, CONNECTOR 17P	
* CN509	1-569-930-11	SOCKET, CONNECTOR 13P	
* CN510	1-568-449-11	HOUSING, CONNECTOR (PC BOARD) 3P	
CN580	1-564-506-11	PLUG, CONNECTOR 3P	
		< DIODE >	
D340	8-719-988-61	DIODE 1SS355TE-17	
D341	8-719-988-61	DIODE 1SS355TE-17	
D342	8-719-988-61	DIODE 1SS355TE-17	
D401	8-719-988-61	DIODE 1SS355TE-17	
D402	8-719-988-61	DIODE 1SS355TE-17	
D501	8-719-988-61	DIODE 1SS355TE-17	
D502	8-719-988-61	DIODE 1SS355TE-17	
D503	8-719-988-61	DIODE 1SS355TE-17	
D504	8-719-988-61	DIODE 1SS355TE-17	
D505	8-719-988-61	DIODE 1SS355TE-17	
D550	8-719-988-61	DIODE 1SS355TE-17	
D551	8-719-988-61	DIODE 1SS355TE-17 (E2, E3, E51)	
D560	8-719-028-23	DIODE D3SBA20-4101	
D561	6-500-522-21	DIODE 10EDB40-TB3	
D562	6-500-522-21	DIODE 10EDB40-TB3	
D563	6-500-522-21	DIODE 10EDB40-TB3	
D581	8-719-056-82	DIODE UDZ-TE-17-6.2B	
D583	8-719-056-83	DIODE UDZ-TE-17-6.8B	
		< FERRITE BEAD >	
FB150	1-216-864-11	SHORT CHIP 0	
FB260	1-216-864-11	SHORT CHIP 0	
FB261	1-216-864-11	SHORT CHIP 0	
FB262	1-216-864-11	SHORT CHIP 0	
FB263	1-216-864-11	SHORT CHIP 0	
FB506	1-500-283-11	INDUCTOR, FERRITE BEAD	
FB507	1-500-283-11	INDUCTOR, FERRITE BEAD	
FB508	1-500-283-11	INDUCTOR, FERRITE BEAD	
FB509	1-500-283-11	INDUCTOR, FERRITE BEAD	
FB510	1-500-283-11	INDUCTOR, FERRITE BEAD	
FB512	1-500-283-11	INDUCTOR, FERRITE BEAD	
		< IC >	
IC101	6-703-650-11	IC M61529FP-D60G	
IC210	8-749-019-25	IC TOTX141 (DIGITAL OUT) (GNX60/GNX70)	
IC301	6-702-130-01	IC HA12237F	
IC401	6-805-072-01	IC M30622MEP-A02FPU0	
IC402	6-705-809-01	IC BD4929G-TR	
IC550	6-703-610-01	IC RT8H015C-T112-1	
IC560	8-759-394-36	IC BA09T	
IC561	6-703-550-01	IC TA7809LS	
IC562	6-702-771-01	IC TA78033LS	
		< JACK >	
J101	1-794-981-11	JACK, PIN 4P (TV, VIDEO/MD)	

Ref. No.	Part No.	Description	Remarks
		< JUMPER RESISTOR >	
JR001	1-216-864-11	SHORT CHIP 0	
JR002	1-216-296-11	SHORT CHIP 0	
JR003	1-216-864-11	SHORT CHIP 0	
JR007	1-216-296-11	SHORT CHIP 0	
JR009	1-216-864-11	SHORT CHIP 0	
JR010	1-216-864-11	SHORT CHIP 0	
JR012	1-216-864-11	SHORT CHIP 0	
JR014	1-216-864-11	SHORT CHIP 0	
JR015	1-216-864-11	SHORT CHIP 0	
JR016	1-216-864-11	SHORT CHIP 0	
JR017	1-216-864-11	SHORT CHIP 0	
JR018	1-216-864-11	SHORT CHIP 0	
JR019	1-216-864-11	SHORT CHIP 0	
JR020	1-216-864-11	SHORT CHIP 0	
JR021	1-216-864-11	SHORT CHIP 0	
JR022	1-216-864-11	SHORT CHIP 0	
JR028	1-216-864-11	SHORT CHIP 0	
JR029	1-216-864-11	SHORT CHIP 0	
JR030	1-216-864-11	SHORT CHIP 0	
JR031	1-216-864-11	SHORT CHIP 0	
JR032	1-216-864-11	SHORT CHIP 0	
JR034	1-216-864-11	SHORT CHIP 0	
JR035	1-216-864-11	SHORT CHIP 0	
JR036	1-216-296-11	SHORT CHIP 0	
JR138	1-216-864-11	SHORT CHIP 0	
JR261	1-216-864-11	SHORT CHIP 0	
JR359	1-216-864-11	SHORT CHIP 0	
JR390	1-216-864-11	SHORT CHIP 0	
JR465	1-216-864-11	SHORT CHIP 0	
JR466	1-216-864-11	SHORT CHIP 0	
JR467	1-216-864-11	SHORT CHIP 0	
JR507	1-216-864-11	SHORT CHIP 0 (US, AR, AUS)	
		< COIL >	
L302	1-414-189-31	INDUCTOR 100uH	
L370	1-410-780-11	INDUCTOR 27mH	
L371	1-410-780-11	INDUCTOR 27mH	
L372	1-414-189-31	INDUCTOR 100uH	
		< TRANSISTOR >	
Q101	8-729-120-28	TRANSISTOR 2SC1623-L5L6	
Q151	8-729-120-28	TRANSISTOR 2SC1623-L5L6	
Q180	8-729-802-80	TRANSISTOR 2SC3661	
Q181	8-729-802-80	TRANSISTOR 2SC3661	
Q250	8-729-802-80	TRANSISTOR 2SC3661	
Q251	8-729-802-80	TRANSISTOR 2SC3661	
Q280	8-729-802-80	TRANSISTOR 2SC3661	
Q281	8-729-802-80	TRANSISTOR 2SC3661	
Q340	8-729-903-46	TRANSISTOR 2SB1132-P	
Q341	8-729-903-46	TRANSISTOR 2SB1132-P	
Q342	8-729-903-46	TRANSISTOR 2SB1132-P	
Q343	8-729-027-43	TRANSISTOR DTC114EKA-T146	
Q344	8-729-027-43	TRANSISTOR DTC114EKA-T146	
Q345	8-729-027-43	TRANSISTOR DTC114EKA-T146	
Q370	8-729-141-75	TRANSISTOR 2SD596DV345	

MAIN

Ref. No.	Part No.	Description	Remarks
Q371	8-729-802-80	TRANSISTOR 2SC3661	
Q372	8-729-802-80	TRANSISTOR 2SC3661	
Q373	8-729-802-80	TRANSISTOR 2SC3661	
Q374	8-729-802-80	TRANSISTOR 2SC3661	
Q375	8-729-802-80	TRANSISTOR 2SC3661	
Q376	8-729-802-80	TRANSISTOR 2SC3661	
Q377	6-550-580-01	TRANSISTOR 2SA1235TP-1F	
Q378	6-550-185-01	TRANSISTOR RT1P137P-TP-1	
Q379	8-729-027-43	TRANSISTOR DTC114EKA-T146	
Q380	8-729-027-43	TRANSISTOR DTC114EKA-T146	
Q381	8-729-027-43	TRANSISTOR DTC114EKA-T146	
Q382	8-729-027-23	TRANSISTOR DTA114EKA-T146	
Q383	8-729-027-43	TRANSISTOR DTC114EKA-T146	
Q389	8-729-027-43	TRANSISTOR DTC114EKA-T146	
Q501	8-729-901-00	TRANSISTOR DTC124EK	
Q504	8-729-027-23	TRANSISTOR DTA114EKA-T146	
Q505	8-729-901-00	TRANSISTOR DTC124EK	
Q506	8-729-027-43	TRANSISTOR DTC114EKA-T146 (E2, E3, E51)	
Q540	8-729-027-31	TRANSISTOR DTA124EKA-T146	
Q541	8-729-027-43	TRANSISTOR DTC114EKA-T146	
Q542	8-729-027-31	TRANSISTOR DTA124EKA-T146	
Q543	8-729-027-43	TRANSISTOR DTC114EKA-T146	
Q544	8-729-027-31	TRANSISTOR DTA124EKA-T146	
Q545	8-729-027-43	TRANSISTOR DTC114EKA-T146	
Q550	8-729-014-97	TRANSISTOR FA1L3Z-T1B (E2, E3, E51)	
Q560	6-550-185-01	TRANSISTOR RT1P137P-TP-1	
Q561	8-729-027-43	TRANSISTOR DTC114EKA-T146	
Q580	8-729-120-28	TRANSISTOR 2SC1623-L5L6	
Q581	8-729-027-43	TRANSISTOR DTC114EKA-T146	
Q582	8-729-120-28	TRANSISTOR 2SC1623-L5L6	
Q583	8-729-027-31	TRANSISTOR DTA124EKA-T146	
Q584	8-729-027-43	TRANSISTOR DTC114EKA-T146	
Q585	8-729-026-68	TRANSISTOR 2SD2525 (TP)	
		< RESISTOR >	
R101	1-216-825-11	METAL CHIP 2.2K 5%	1/10W
R102	1-216-833-11	METAL CHIP 10K 5%	1/10W
R103	1-216-818-11	METAL CHIP 560 5%	1/10W
R104	1-216-821-11	METAL CHIP 1K 5%	1/10W
R105	1-216-841-11	METAL CHIP 47K 5%	1/10W
R106	1-216-833-11	METAL CHIP 10K 5%	1/10W
R107	1-216-813-11	METAL CHIP 220 5%	1/10W
R116	1-216-809-11	METAL CHIP 100 5%	1/10W
R121	1-216-821-11	METAL CHIP 1K 5%	1/10W
R122	1-216-821-11	METAL CHIP 1K 5%	1/10W
R130	1-216-825-11	METAL CHIP 2.2K 5%	1/10W
R131	1-216-825-11	METAL CHIP 2.2K 5%	1/10W
R132	1-216-857-11	METAL CHIP 1M 5%	1/10W
R133	1-216-845-11	METAL CHIP 100K 5%	1/10W
R140	1-216-833-11	METAL CHIP 10K 5%	1/10W
R150	1-216-809-11	METAL CHIP 100 5%	1/10W
R151	1-216-825-11	METAL CHIP 2.2K 5%	1/10W
R152	1-216-833-11	METAL CHIP 10K 5%	1/10W
R153	1-216-818-11	METAL CHIP 560 5%	1/10W
R154	1-216-821-11	METAL CHIP 1K 5%	1/10W
R155	1-216-841-11	METAL CHIP 47K 5%	1/10W
R156	1-216-833-11	METAL CHIP 10K 5%	1/10W
R157	1-216-813-11	METAL CHIP 220 5%	1/10W

Ref. No.	Part No.	Description	Remarks
R166	1-216-809-11	METAL CHIP 100 5%	1/10W
R180	1-216-833-11	METAL CHIP 10K 5%	1/10W
R181	1-216-833-11	METAL CHIP 10K 5%	1/10W
R182	1-216-841-11	METAL CHIP 47K 5%	1/10W
R183	1-216-841-11	METAL CHIP 47K 5%	1/10W
R184	1-216-821-11	METAL CHIP 1K 5%	1/10W
R185	1-216-821-11	METAL CHIP 1K 5%	1/10W
R186	1-216-833-11	METAL CHIP 10K 5%	1/10W
R187	1-216-833-11	METAL CHIP 10K 5%	1/10W
R250	1-216-821-11	METAL CHIP 1K 5%	1/10W
R251	1-216-833-11	METAL CHIP 10K 5%	1/10W
R252	1-216-839-11	METAL CHIP 33K 5%	1/10W
R253	1-216-833-11	METAL CHIP 10K 5%	1/10W
R254	1-216-833-11	METAL CHIP 10K 5%	1/10W
R255	1-216-833-11	METAL CHIP 10K 5%	1/10W
R256	1-216-839-11	METAL CHIP 33K 5%	1/10W
R257	1-216-821-11	METAL CHIP 1K 5%	1/10W
R260	1-216-864-11	SHORT CHIP 0	
R261	1-216-864-11	SHORT CHIP 0	
R262	1-216-864-11	SHORT CHIP 0	
R263	1-216-864-11	SHORT CHIP 0	
R264	1-216-845-11	METAL CHIP 100K 5%	1/10W
R265	1-216-845-11	METAL CHIP 100K 5%	1/10W
R266	1-216-845-11	METAL CHIP 100K 5%	1/10W
R267	1-216-845-11	METAL CHIP 100K 5%	1/10W
R268	1-216-821-11	METAL CHIP 1K 5%	1/10W
R269	1-216-821-11	METAL CHIP 1K 5%	1/10W
R270	1-216-821-11	METAL CHIP 1K 5%	1/10W
R271	1-216-821-11	METAL CHIP 1K 5%	1/10W
R272	1-216-837-11	METAL CHIP 22K 5%	1/10W
R273	1-216-833-11	METAL CHIP 10K 5%	1/10W
R274	1-216-841-11	METAL CHIP 47K 5%	1/10W
R281	1-216-833-11	METAL CHIP 10K 5%	1/10W
R282	1-216-839-11	METAL CHIP 33K 5%	1/10W
R285	1-216-833-11	METAL CHIP 10K 5%	1/10W
R286	1-216-839-11	METAL CHIP 33K 5%	1/10W
R290	1-216-841-11	METAL CHIP 47K 5%	1/10W
R291	1-216-829-11	METAL CHIP 4.7K 5%	1/10W
R292	1-216-841-11	METAL CHIP 47K 5%	1/10W
R293	1-216-841-11	METAL CHIP 47K 5%	1/10W
R294	1-216-829-11	METAL CHIP 4.7K 5%	1/10W
R295	1-216-841-11	METAL CHIP 47K 5%	1/10W
R296	1-216-829-11	METAL CHIP 4.7K 5%	1/10W
R297	1-216-841-11	METAL CHIP 47K 5%	1/10W
R301	1-216-827-11	METAL CHIP 3.3K 5%	1/10W
R302	1-216-829-11	METAL CHIP 4.7K 5%	1/10W
R303	1-216-833-11	METAL CHIP 10K 5%	1/10W
R304	1-216-825-11	METAL CHIP 2.2K 5%	1/10W
R305	1-216-841-11	METAL CHIP 47K 5%	1/10W
R306	1-216-837-11	METAL CHIP 22K 5%	1/10W
R307	1-216-857-11	METAL CHIP 1M 5%	1/10W
R308	1-216-809-11	METAL CHIP 100 5%	1/10W
R309	1-216-829-11	METAL CHIP 4.7K 5%	1/10W
R310	1-216-809-11	METAL CHIP 100 5%	1/10W
R311	1-216-864-11	SHORT CHIP 0	
R312	1-216-809-11	METAL CHIP 100 5%	1/10W
R319	1-216-825-11	METAL CHIP 2.2K 5%	1/10W

MAIN

Ref. No.	Part No.	Description			Remarks
R336	1-218-867-11	METAL CHIP	6.8K	0.5%	1/10W
R337	1-216-833-11	METAL CHIP	10K	5%	1/10W
R339	1-216-837-11	METAL CHIP	22K	5%	1/10W
R340	1-216-825-11	METAL CHIP	2.2K	5%	1/10W
R341	1-216-827-11	METAL CHIP	3.3K	5%	1/10W
R342	1-216-825-11	METAL CHIP	2.2K	5%	1/10W
R343	1-216-825-11	METAL CHIP	2.2K	5%	1/10W
R344	1-216-819-11	METAL CHIP	680	5%	1/10W
R345	1-216-827-11	METAL CHIP	3.3K	5%	1/10W
R346	1-216-819-11	METAL CHIP	680	5%	1/10W
R347	1-216-825-11	METAL CHIP	2.2K	5%	1/10W
R348	1-216-819-11	METAL CHIP	680	5%	1/10W
R349	1-216-827-11	METAL CHIP	3.3K	5%	1/10W
R351	1-216-827-11	METAL CHIP	3.3K	5%	1/10W
R352	1-216-829-11	METAL CHIP	4.7K	5%	1/10W
R353	1-216-833-11	METAL CHIP	10K	5%	1/10W
R354	1-216-825-11	METAL CHIP	2.2K	5%	1/10W
R355	1-216-841-11	METAL CHIP	47K	5%	1/10W
R356	1-218-867-11	METAL CHIP	6.8K	0.5%	1/10W
R357	1-216-833-11	METAL CHIP	10K	5%	1/10W
R369	1-216-825-11	METAL CHIP	2.2K	5%	1/10W
R370	1-216-827-11	METAL CHIP	3.3K	5%	1/10W
R371	1-216-829-11	METAL CHIP	4.7K	5%	1/10W
R372	1-216-833-11	METAL CHIP	10K	5%	1/10W
R373	1-216-829-11	METAL CHIP	4.7K	5%	1/10W
R374	1-216-829-11	METAL CHIP	4.7K	5%	1/10W
R375	1-216-833-11	METAL CHIP	10K	5%	1/10W
R376	1-216-829-11	METAL CHIP	4.7K	5%	1/10W
R377	1-216-805-11	METAL CHIP	47	5%	1/10W
R378	1-216-833-11	METAL CHIP	10K	5%	1/10W
R379	1-216-797-11	METAL CHIP	10	5%	1/10W
R380	1-218-867-11	METAL CHIP	6.8K	0.5%	1/10W
R381	1-216-825-11	METAL CHIP	2.2K	5%	1/10W
R382	1-216-825-11	METAL CHIP	2.2K	5%	1/10W
R383	1-216-825-11	METAL CHIP	2.2K	5%	1/10W
R384	1-216-825-11	METAL CHIP	2.2K	5%	1/10W
R385	1-216-825-11	METAL CHIP	2.2K	5%	1/10W
R386	1-216-803-11	METAL CHIP	33	5%	1/10W
R387	1-216-825-11	METAL CHIP	2.2K	5%	1/10W
R388	1-218-867-11	METAL CHIP	6.8K	0.5%	1/10W
R389	1-216-837-11	METAL CHIP	22K	5%	1/10W
R390	1-216-833-11	METAL CHIP	10K	5%	1/10W
R391	1-216-833-11	METAL CHIP	10K	5%	1/10W
R392	1-216-833-11	METAL CHIP	10K	5%	1/10W
R393	1-216-825-11	METAL CHIP	2.2K	5%	1/10W
R394	1-216-829-11	METAL CHIP	4.7K	5%	1/10W
R395	1-216-841-11	METAL CHIP	47K	5%	1/10W
R396	1-216-833-11	METAL CHIP	10K	5%	1/10W
R397	1-216-825-11	METAL CHIP	2.2K	5%	1/10W
R399	1-216-833-11	METAL CHIP	10K	5%	1/10W
R400	1-216-809-11	METAL CHIP	100	5%	1/10W
R401	1-216-809-11	METAL CHIP	100	5%	1/10W
R402	1-216-809-11	METAL CHIP	100	5%	1/10W
R403	1-216-809-11	METAL CHIP	100	5%	1/10W
R404	1-216-809-11	METAL CHIP	100	5%	1/10W
R405	1-216-809-11	METAL CHIP	100	5%	1/10W
R406	1-216-809-11	METAL CHIP	100	5%	1/10W
R407	1-216-809-11	METAL CHIP	100	5%	1/10W
R409	1-216-833-11	METAL CHIP	10K	5%	1/10W
R411	1-216-851-11	METAL CHIP	330K	5%	1/10W
R412	1-216-845-11	METAL CHIP	100K	5%	1/10W
R413	1-216-864-11	SHORT CHIP	0		
R417	1-216-833-11	METAL CHIP	10K	5%	1/10W
R418	1-216-813-11	METAL CHIP	220	5%	1/10W
R419	1-216-809-11	METAL CHIP	100	5%	1/10W
R420	1-216-821-11	METAL CHIP	1K	5%	1/10W
R421	1-216-809-11	METAL CHIP	100	5%	1/10W
R422	1-216-809-11	METAL CHIP	100	5%	1/10W
R423	1-216-809-11	METAL CHIP	100	5%	1/10W
R424	1-216-809-11	METAL CHIP	100	5%	1/10W
R425	1-216-809-11	METAL CHIP	100	5%	1/10W
R426	1-216-809-11	METAL CHIP	100	5%	1/10W
R427	1-216-809-11	METAL CHIP	100	5%	1/10W
R428	1-216-809-11	METAL CHIP	100	5%	1/10W
R429	1-216-809-11	METAL CHIP	100	5%	1/10W
R430	1-216-809-11	METAL CHIP	100	5%	1/10W
R431	1-216-809-11	METAL CHIP	100	5%	1/10W
R432	1-216-809-11	METAL CHIP	100	5%	1/10W
R433	1-216-809-11	METAL CHIP	100	5%	1/10W
R434	1-216-809-11	METAL CHIP	100	5%	1/10W
R438	1-216-809-11	METAL CHIP	100	5%	1/10W
R439	1-216-809-11	METAL CHIP	100	5%	1/10W
R440	1-216-809-11	METAL CHIP	100	5%	1/10W
R441	1-216-809-11	METAL CHIP	100	5%	1/10W
R442	1-216-809-11	METAL CHIP	100	5%	1/10W
R443	1-216-809-11	METAL CHIP	100	5%	1/10W
R444	1-216-809-11	METAL CHIP	100	5%	1/10W
R445	1-216-809-11	METAL CHIP	100	5%	1/10W
R446	1-216-809-11	METAL CHIP	100	5%	1/10W
R447	1-216-809-11	METAL CHIP	100	5%	1/10W
R448	1-216-809-11	METAL CHIP	100	5%	1/10W
R451	1-216-809-11	METAL CHIP	100	5%	1/10W
R452	1-216-809-11	METAL CHIP	100	5%	1/10W
R463	1-216-833-11	METAL CHIP	10K	5%	1/10W
R469	1-216-809-11	METAL CHIP	100	5%	1/10W
R470	1-216-809-11	METAL CHIP	100	5%	1/10W
R472	1-216-809-11	METAL CHIP	100	5%	1/10W
R475	1-216-809-11	METAL CHIP	100	5%	1/10W
R476	1-216-809-11	METAL CHIP	100	5%	1/10W
R477	1-216-809-11	METAL CHIP	100	5%	1/10W
R478	1-216-809-11	METAL CHIP	100	5%	1/10W
R484	1-216-809-11	METAL CHIP	100	5%	1/10W
R485	1-216-809-11	METAL CHIP	100	5%	1/10W
R486	1-216-809-11	METAL CHIP	100	5%	1/10W
R487	1-216-809-11	METAL CHIP	100	5%	1/10W
R488	1-216-809-11	METAL CHIP	100	5%	1/10W
R489	1-216-809-11	METAL CHIP	100	5%	1/10W
R490	1-216-809-11	METAL CHIP	100	5%	1/10W
R492	1-216-815-11	METAL CHIP	330	5%	1/10W (GNX70/GX9900)
R492	1-216-864-11	SHORT CHIP	0 (GNX60)		
R493	1-216-815-11	METAL CHIP	330	5%	1/10W (E3)
R493	1-216-823-11	METAL CHIP	1.5K	5%	1/10W (AUS)

MAIN **MIC**

Ref. No.	Part No.	Description			Remarks
R493	1-216-829-11	METAL CHIP	4.7K	5%	1/10W (US, E2, E51, AR)
R500	1-216-833-11	METAL CHIP	10K	5%	1/10W
R501	1-216-813-11	METAL CHIP	220	5%	1/10W
R502	1-216-821-11	METAL CHIP	1K	5%	1/10W
R503	1-216-864-11	SHORT CHIP	0		
R505	1-216-829-11	METAL CHIP	4.7K	5%	1/10W
R508	1-216-833-11	METAL CHIP	10K	5%	1/10W (E2, E3, E51)
R509	1-216-832-11	METAL CHIP	8.2K	5%	1/10W (GNX70: E2, E3, E51)
R509	1-216-837-11	METAL CHIP	22K	5%	1/10W (GNX60: E2, E3, E51)
R529	1-216-833-11	METAL CHIP	10K	5%	1/10W
R530	1-216-833-11	METAL CHIP	10K	5%	1/10W
R532	1-216-864-11	SHORT CHIP	0		
R538	1-216-833-11	METAL CHIP	10K	5%	1/10W
R540	1-216-843-11	METAL CHIP	68K	5%	1/10W
R541	1-216-835-11	METAL CHIP	15K	5%	1/10W
R542	1-216-853-11	METAL CHIP	470K	5%	1/10W
R543	1-216-843-11	METAL CHIP	68K	5%	1/10W
R544	1-216-835-11	METAL CHIP	15K	5%	1/10W
R545	1-216-853-11	METAL CHIP	470K	5%	1/10W
R546	1-216-843-11	METAL CHIP	68K	5%	1/10W
R547	1-216-835-11	METAL CHIP	15K	5%	1/10W
R548	1-216-853-11	METAL CHIP	470K	5%	1/10W
R551	1-216-842-11	METAL CHIP	56K	5%	1/10W (E2, E3, E51)
R553	1-216-824-11	METAL CHIP	1.8K	5%	1/10W (E2, E3, E51)
R560	1-216-826-11	METAL CHIP	2.7K	5%	1/10W
R562	1-216-825-11	METAL CHIP	2.2K	5%	1/10W
R563	1-216-825-11	METAL CHIP	2.2K	5%	1/10W
R570	1-216-833-11	METAL CHIP	10K	5%	1/10W
R571	1-216-833-11	METAL CHIP	10K	5%	1/10W
R573	1-216-833-11	METAL CHIP	10K	5%	1/10W
R574	1-216-833-11	METAL CHIP	10K	5%	1/10W
R575	1-216-821-11	METAL CHIP	1K	5%	1/10W
R577	1-216-845-11	METAL CHIP	100K	5%	1/10W
R579	1-216-833-11	METAL CHIP	10K	5%	1/10W
R580	1-216-833-11	METAL CHIP	10K	5%	1/10W
R582	1-216-864-11	SHORT CHIP	0		
R585	1-216-833-11	METAL CHIP	10K	5%	1/10W
R586	1-216-833-11	METAL CHIP	10K	5%	1/10W
R587	1-216-833-11	METAL CHIP	10K	5%	1/10W
R591	1-216-835-11	METAL CHIP	15K	5%	1/10W
R592	1-216-829-11	METAL CHIP	4.7K	5%	1/10W
R593	1-216-821-11	METAL CHIP	1K	5%	1/10W (E2, E51, AR)
R593	1-216-825-11	METAL CHIP	2.2K	5%	1/10W (GX9900)
R593	1-216-829-11	METAL CHIP	4.7K	5%	1/10W (E3, AUS)
		< TRANSFORMER >			
T301	1-433-372-11	TRANSFORMER, BIAS OSCILLATION			

Ref. No.	Part No.	Description			Remarks
		< VIBRATOR >			
X401	1-567-098-41	VIBRATOR, CRYSTAL (32.768kHz)			
X402	1-795-482-11	VIBRATOR, CERAMIC (16MHz)			
**********					
	A-1089-466-A	MIC BOARD, COMPLETE			
		**********			
		< CAPACITOR >			
C1100	1-162-970-11	CERAMIC CHIP	0.01uF	10%	25V
C1101	1-162-970-11	CERAMIC CHIP	0.01uF	10%	25V
C1102	1-124-257-00	ELECT	2.2uF	20%	50V
C1103	1-162-923-11	CERAMIC CHIP	47PF	5%	50V
C1104	1-115-416-11	CERAMIC CHIP	0.001uF	5%	25V
C1105	1-162-962-11	CERAMIC CHIP	470PF	10%	50V
C1106	1-124-257-00	ELECT	2.2uF	20%	50V
C1108	1-124-257-00	ELECT	2.2uF	20%	50V
C1109	1-162-923-11	CERAMIC CHIP	47PF	5%	50V
C1110	1-164-217-11	CERAMIC CHIP	150PF	5%	50V
C1111	1-162-923-11	CERAMIC CHIP	47PF	5%	50V
C1112	1-124-261-00	ELECT	10uF	20%	50V
C1113	1-124-261-00	ELECT	10uF	20%	50V
C1114	1-124-464-11	ELECT	0.22uF	20%	50V
C1115	1-126-961-11	ELECT	2.2uF	20%	50V
C1116	1-164-227-11	CERAMIC CHIP	0.022uF	10%	25V
C1117	1-126-960-11	ELECT	1uF	20%	50V
C1118	1-162-969-11	CERAMIC CHIP	0.0068uF	10%	25V
C1119	1-162-965-11	CERAMIC CHIP	0.0015uF	10%	50V
C1120	1-136-495-11	FILM	0.068uF	5%	50V
C1121	1-124-589-11	ELECT	47uF	20%	16V
C1122	1-124-589-11	ELECT	47uF	20%	16V
C1123	1-136-495-11	FILM	0.068uF	5%	50V
C1124	1-126-960-11	ELECT	1uF	20%	50V
C1125	1-162-965-11	CERAMIC CHIP	0.0015uF	10%	50V
C1126	1-162-969-11	CERAMIC CHIP	0.0068uF	10%	25V
C1127	1-136-495-11	FILM	0.068uF	5%	50V
C1128	1-126-957-11	ELECT	0.22uF	20%	50V
C1129	1-126-957-11	ELECT	0.22uF	20%	50V
C1130	1-136-155-00	FILM	0.015uF	5%	50V
C1131	1-126-176-11	ELECT	220uF	20%	10V
C1133	1-113-619-11	CERAMIC CHIP	0.47uF		10V
C1139	1-126-160-11	ELECT	1uF	20%	50V
C1142	1-216-864-11	SHORT CHIP	0		
		< CONNECTOR >			
CN1102	1-785-329-11	PIN, CONNECTOR (LIGHT ANGLE) 3P			
		< DIODE >			
D1100	8-719-988-61	DIODE 1SS355TE-17			
D1101	8-719-988-61	DIODE 1SS355TE-17			
D1102	8-719-976-99	DIODE DTZ5.1B			
		< JUMPER RESISTOR >			
FB1100	1-216-864-11	SHORT CHIP	0		
FB1101	1-216-864-11	SHORT CHIP	0		

MIC | MOTOR (LD) | MOTOR (TB) | PA

Ref. No.	Part No.	Description			Remarks
		< IC >			
IC1100	8-759-710-97	IC NJM4565M-D			
IC1101	8-759-496-41	IC M65850FP-E1			
		< JACK >			
J1100	1-817-629-11	JACK (LARGE TYPE) (MIC 1)			
J1101	1-817-629-11	JACK (LARGE TYPE) (MIC 2)			
J1103	1-794-702-11	JACK, HEADPHONE (PHONES)			
		< JUMPER RESISTOR >			
JR1101	1-216-864-11	SHORT CHIP	0		
JR1102	1-216-864-11	SHORT CHIP	0		
JR1103	1-216-296-11	SHORT CHIP	0		
JR1104	1-216-296-11	SHORT CHIP	0		
JR1105	1-216-296-11	SHORT CHIP	0		
JR1106	1-216-864-11	SHORT CHIP	0		
JR1108	1-216-864-11	SHORT CHIP	0		
JR1113	1-216-296-11	SHORT CHIP	0		
JR1114	1-216-296-11	SHORT CHIP	0		
		< RESISTOR >			
R1100	1-216-833-11	METAL CHIP	10K	5%	1/10W
R1101	1-216-821-11	METAL CHIP	1K	5%	1/10W
R1102	1-216-833-11	METAL CHIP	10K	5%	1/10W
R1103	1-216-821-11	METAL CHIP	1K	5%	1/10W
R1104	1-216-845-11	METAL CHIP	100K	5%	1/10W
R1105	1-216-821-11	METAL CHIP	1K	5%	1/10W
R1106	1-216-841-11	METAL CHIP	47K	5%	1/10W
R1107	1-216-809-11	METAL CHIP	100	5%	1/10W
R1108	1-216-833-11	METAL CHIP	10K	5%	1/10W
R1109	1-216-847-11	METAL CHIP	150K	5%	1/10W
R1110	1-216-809-11	METAL CHIP	100	5%	1/10W
R1111	1-216-845-11	METAL CHIP	100K	5%	1/10W
R1113	1-216-835-11	METAL CHIP	15K	5%	1/10W
R1114	1-216-835-11	METAL CHIP	15K	5%	1/10W
R1115	1-216-815-11	METAL CHIP	330	5%	1/10W
R1116	1-216-815-11	METAL CHIP	330	5%	1/10W
R1117	1-216-835-11	METAL CHIP	15K	5%	1/10W
R1118	1-216-835-11	METAL CHIP	15K	5%	1/10W
R1119	1-216-835-11	METAL CHIP	15K	5%	1/10W
R1120	1-216-846-11	METAL CHIP	120K	5%	1/10W
R1121	1-216-835-11	METAL CHIP	15K	5%	1/10W
R1122	1-216-835-11	METAL CHIP	15K	5%	1/10W
R1123	1-216-835-11	METAL CHIP	15K	5%	1/10W
R1124	1-216-841-11	METAL CHIP	47K	5%	1/10W
R1125	1-216-825-11	METAL CHIP	2.2K	5%	1/10W
R1126	1-216-825-11	METAL CHIP	2.2K	5%	1/10W
R1132	1-216-864-11	SHORT CHIP	0		
		< VARIABLE RESISTOR >			
RV1100	1-227-452-11	RES, VAR, CARBON 50K (MIC LEVEL)			
RV1101	1-227-452-11	RES, VAR, CARBON 50K (ECHOLEVEL)			

****

	1-687-133-12	MOTOR (LD) BOARD **********			

****

Ref. No.	Part No.	Description			Remarks
	1-687-134-12	MOTOR (TB) BOARD **********			
		< CONNECTOR >			
CN742	1-784-727-11	CONNECTOR, FFC 5P			

****

	A-1089-504-A	PA BOARD, COMPLETE (GNX60: E3, AUS)			
	A-1089-530-A	PA BOARD, COMPLETE (GNX70: E3, AUS)			
	A-1089-586-A	PA BOARD, COMPLETE (GX9900)			
	A-1110-893-A	PA BOARD, COMPLETE (GNX60: E2, E51, AR)			
	A-1110-912-A	PA BOARD, COMPLETE (GNX70: E2, E51) **********			
		< CAPACITOR >			
C600	1-126-963-11	ELECT	4.7uF	20%	50V
C601	1-162-966-11	CERAMIC CHIP	0.0022uF	10%	50V
C602	1-104-658-91	ELECT	100uF	20%	10V
C604	1-162-960-11	CERAMIC CHIP	220PF	10%	50V
C605	1-162-970-11	CERAMIC CHIP	0.01uF	10%	25V
C608	1-126-965-91	ELECT	22uF	20%	50V
C609	1-128-560-11	ELECT	22uF	20%	100V
C610	1-128-560-11	ELECT	22uF	20%	100V
C616	1-136-495-11	FILM	0.068uF	5%	50V
C617	1-136-495-11	FILM	0.068uF	5%	50V
C618	1-128-582-11	ELECT	10uF	20%	100V
C619	1-128-582-11	ELECT	10uF	20%	100V
C634	1-104-665-11	ELECT	100uF	20%	25V
C635	1-104-665-11	ELECT	100uF	20%	25V
C636	1-107-721-11	ELECT	4.7uF	20%	100V
C637	1-107-721-11	ELECT	4.7uF	20%	100V
C648	1-104-658-91	ELECT	100uF	20%	10V
C649	1-126-964-11	ELECT	10uF	20%	50V
C650	1-126-963-11	ELECT	4.7uF	20%	50V
C651	1-162-966-11	CERAMIC CHIP	0.0022uF	10%	50V
C652	1-104-658-91	ELECT	100uF	20%	10V
C654	1-162-960-11	CERAMIC CHIP	220PF	10%	50V
C655	1-126-964-11	ELECT	10uF	20%	50V
C656	1-127-815-11	ELECT	3300uF	20%	100V
C657	1-130-777-00	MYLAR	0.1uF	5%	100V
C658	1-127-811-11	ELECT	3300uF	20%	50V
C659	1-130-777-00	MYLAR	0.1uF	5%	100V
C660	1-131-992-91	CERAMIC CHIP	100000PF		35V
C666	1-136-495-11	FILM	0.068uF	5%	50V
C667	1-136-495-11	FILM	0.068uF	5%	50V
C676	1-127-815-11	ELECT	3300uF	20%	100V
C677	1-130-777-00	MYLAR	0.1uF	5%	100V
C678	1-127-811-11	ELECT	3300uF	20%	50V
C679	1-130-777-00	MYLAR	0.1uF	5%	100V
C681	1-110-563-11	CERAMIC CHIP	0.068uF	10%	16V
C682	1-110-563-11	CERAMIC CHIP	0.068uF	10%	16V
C683	1-162-970-11	CERAMIC CHIP	0.01uF	10%	25V
C691	1-110-563-11	CERAMIC CHIP	0.068uF	10%	16V
C692	1-110-563-11	CERAMIC CHIP	0.068uF	10%	16V
C693	1-162-970-11	CERAMIC CHIP	0.01uF	10%	25V
		< CONNECTOR >			
CN600	1-764-865-41	CONNECTOR, BOARD TO BOARD 13P			

PA

Ref. No.	Part No.	Description	Remarks
CN601	1-784-031-41	CONNECTOR, BOARD TO BOARD 8P	
		< DIODE >	
D609	8-719-988-61	DIODE 1SS355TE-17	
D611	8-719-056-93	DIODE UDZ-TE-17-18B	
D612	8-719-056-93	DIODE UDZ-TE-17-18B	
D620	8-719-988-61	DIODE 1SS355TE-17	
D624	8-719-988-61	DIODE 1SS355TE-17	
D646	8-719-988-61	DIODE 1SS355TE-17	
D654	8-719-988-61	DIODE 1SS355TE-17	
D655	8-719-988-61	DIODE 1SS355TE-17	
D656	8-719-500-60	DIODE D5SBA20	
D658	8-719-500-60	DIODE D5SBA20	
D660	8-719-988-61	DIODE 1SS355TE-17	
D661	8-719-988-61	DIODE 1SS355TE-17	
D665	8-719-988-61	DIODE 1SS355TE-17 (GNX70/GX9900)	
D670	8-719-988-61	DIODE 1SS355TE-17	
		< IC >	
IC600	8-749-017-06	IC STK412-150	
		< JUMPER RESISTOR >	
JR600	1-216-296-11	SHORT CHIP 0	
JR603	1-216-296-11	SHORT CHIP 0	
		< TRANSISTOR >	
Q604	8-729-924-99	TRANSISTOR 2SC3722K-E	
Q606	8-729-821-00	TRANSISTOR 2SA1207	
Q610	8-729-924-99	TRANSISTOR 2SC3722K-E	
Q618	8-729-924-99	TRANSISTOR 2SC3722K-E	
Q628	8-729-120-28	TRANSISTOR 2SC1623-L5L6	
Q629	8-729-120-28	TRANSISTOR 2SC1623-L5L6	
Q630	8-729-120-28	TRANSISTOR 2SC1623-L5L6	
Q634	8-729-027-31	TRANSISTOR DTA124EKA-T146	
Q640	8-729-802-80	TRANSISTOR 2SC3661	
Q641	8-729-802-80	TRANSISTOR 2SC3661	
Q644	8-729-120-28	TRANSISTOR 2SC1623-L5L6	
Q647	8-729-120-28	TRANSISTOR 2SC1623-L5L6	
Q648	8-729-120-28	TRANSISTOR 2SC1623-L5L6	
Q666	8-729-120-28	TRANSISTOR 2SC1623-L5L6	(GNX70/GX9900)
Q668	8-729-924-99	TRANSISTOR 2SC3722K-E	
Q682	8-729-120-28	TRANSISTOR 2SC1623-L5L6	
		< RESISTOR >	
R600	1-216-821-11	METAL CHIP 1K 5%	1/10W
R601	1-216-841-11	METAL CHIP 47K 5%	1/10W
R602	1-216-817-11	METAL CHIP 470 5%	1/10W (GNX70/GX9900)
R602	1-216-818-11	METAL CHIP 560 5%	1/10W (GNX60)
R603	1-216-841-11	METAL CHIP 47K 5%	1/10W
R604	1-216-833-11	METAL CHIP 10K 5%	1/10W
R605	1-216-833-11	METAL CHIP 10K 5%	1/10W
R606	1-216-841-11	METAL CHIP 47K 5%	1/10W
R607	1-216-825-11	METAL CHIP 2.2K 5%	1/10W
R608	1-216-845-11	METAL CHIP 100K 5%	1/10W

Ref. No.	Part No.	Description	Remarks
R609	1-216-843-11	METAL CHIP 68K 5%	1/10W
R610	1-216-843-11	METAL CHIP 68K 5%	1/10W
R611	1-216-839-11	METAL CHIP 33K 5%	1/10W
⚠R612	1-245-605-51	FUSIBLE 100 5%	1/4W
R613	1-215-872-11	METAL OXIDE 3.3K 5%	1W
R614	1-215-872-11	METAL OXIDE 3.3K 5%	1W
⚠R615	1-245-605-51	FUSIBLE 100 5%	1/4W
⚠R616	1-217-637-00	FUSIBLE 1 5%	1/4W
R617	1-216-845-11	METAL CHIP 100K 5%	1/10W
⚠R618	1-234-798-11	ENCAPSULATED COMPONENT	
R619	1-216-821-11	METAL CHIP 1K 5%	1/10W
R620	1-216-839-11	METAL CHIP 33K 5%	1/10W
R621	1-216-845-11	METAL CHIP 100K 5%	1/10W
R622	1-245-711-31	CARBON 10 5%	1/2W
R623	1-216-843-11	METAL CHIP 68K 5%	1/10W
R624	1-216-837-11	METAL CHIP 22K 5%	1/10W
R625	1-216-826-11	METAL CHIP 2.7K 5%	1/10W (US, E2, E51, AR)
R625	1-216-827-11	METAL CHIP 3.3K 5%	1/10W (GNX60: E3, AUS)
R625	1-216-828-11	METAL CHIP 3.9K 5%	1/10W (GNX70: E3, AUS)
R626	1-216-842-11	METAL CHIP 56K 5%	1/10W
R627	1-216-821-11	METAL CHIP 1K 5%	1/10W
R628	1-216-837-11	METAL CHIP 22K 5%	1/10W
R629	1-216-830-11	METAL CHIP 5.6K 5%	1/10W
R630	1-216-845-11	METAL CHIP 100K 5%	1/10W
R631	1-216-845-11	METAL CHIP 100K 5%	1/10W
R632	1-216-845-11	METAL CHIP 100K 5%	1/10W
R633	1-216-842-11	METAL CHIP 56K 5%	1/10W
R634	1-216-825-11	METAL CHIP 2.2K 5%	1/10W
R635	1-216-833-11	METAL CHIP 10K 5%	1/10W
R636	1-215-891-11	METAL OXIDE 680 5%	2W
R637	1-215-891-11	METAL OXIDE 680 5%	2W
R638	1-216-845-11	METAL CHIP 100K 5%	1/10W
R639	1-216-845-11	METAL CHIP 100K 5%	1/10W
R640	1-216-821-11	METAL CHIP 1K 5%	1/10W
R641	1-216-821-11	METAL CHIP 1K 5%	1/10W
R642	1-216-811-11	METAL CHIP 150 5%	1/10W
R643	1-216-811-11	METAL CHIP 150 5%	1/10W
R644	1-216-825-11	METAL CHIP 2.2K 5%	1/10W
R645	1-216-833-11	METAL CHIP 10K 5%	1/10W
⚠R646	1-260-086-31	CARBON 82 5%	1/2W
R647	1-216-829-11	METAL CHIP 4.7K 5%	1/10W
R648	1-216-829-11	METAL CHIP 4.7K 5%	1/10W
R649	1-216-837-11	METAL CHIP 22K 5%	1/10W
R650	1-216-821-11	METAL CHIP 1K 5%	1/10W
R651	1-216-841-11	METAL CHIP 47K 5%	1/10W
R652	1-216-817-11	METAL CHIP 470 5%	1/10W (GNX70/GX9900)
R652	1-216-818-11	METAL CHIP 560 5%	1/10W (GNX60)
R653	1-216-841-11	METAL CHIP 47K 5%	1/10W
R654	1-216-841-11	METAL CHIP 47K 5%	1/10W
R655	1-216-841-11	METAL CHIP 47K 5%	1/10W
R656	1-216-849-11	METAL CHIP 220K 5%	1/10W
R657	1-216-849-11	METAL CHIP 220K 5%	1/10W
R658	1-216-845-11	METAL CHIP 100K 5%	1/10W
R660	1-216-837-11	METAL CHIP 22K 5%	1/10W

Ref. No.	Part No.	Description			Remarks
R661	1-216-837-11	METAL CHIP	22K	5%	1/10W
R662	1-216-811-11	METAL CHIP	150	5%	1/10W
R663	1-216-811-11	METAL CHIP	150	5%	1/10W
⚠R665	1-260-086-31	CARBON	82	5%	1/2W (GNX70/GX9900)
R666	1-216-829-11	METAL CHIP	4.7K	5%	1/10W (GNX70/GX9900)
R667	1-216-833-11	METAL CHIP	10K	5%	1/10W (GNX70/GX9900)
⚠R668	1-234-798-11	ENCAPSULATED COMPONENT			
R669	1-216-821-11	METAL CHIP	1K	5%	1/10W
R670	1-216-839-11	METAL CHIP	33K	5%	1/10W
R671	1-216-845-11	METAL CHIP	100K	5%	1/10W
R672	1-245-711-31	CARBON	10	5%	1/2W
R673	1-216-842-11	METAL CHIP	56K	5%	1/10W
R674	1-216-837-11	METAL CHIP	22K	5%	1/10W
R676	1-216-849-11	METAL CHIP	220K	5%	1/10W
R677	1-216-849-11	METAL CHIP	220K	5%	1/10W
R678	1-216-845-11	METAL CHIP	100K	5%	1/10W
R681	1-245-711-31	CARBON	10	5%	1/2W
R682	1-216-821-11	METAL CHIP	1K	5%	1/10W
R683	1-216-829-11	METAL CHIP	4.7K	5%	1/10W
R685	1-216-833-11	METAL CHIP	10K	5%	1/10W
R691	1-245-711-31	CARBON	10	5%	1/2W
R692	1-216-841-11	METAL CHIP	47K	5%	1/10W
R693	1-216-845-11	METAL CHIP	100K	5%	1/10W
R694	1-216-843-11	METAL CHIP	68K	5%	1/10W
R695	1-216-845-11	METAL CHIP	100K	5%	1/10W
R696	1-216-845-11	METAL CHIP	100K	5%	1/10W
R697	1-216-825-11	METAL CHIP	2.2K	5%	1/10W
R698	1-216-845-11	METAL CHIP	100K	5%	1/10W
		< RELAY >			
RY646	1-755-500-11	RELAY			
RY665	1-755-500-11	RELAY (GNX70/GX9900)			
		< THERMISTOR >			
TH629	1-807-796-11	THERMISTOR			
TH630	1-807-796-11	THERMISTOR			
		< TERMINAL >			
TM600	1-780-001-21	TERMINAL BOARD (SPEAKER) (FRONT SPEAKER)			
TM601	1-780-001-21	TERMINAL BOARD (SPEAKER) (SURR SPEAKER) (GNX70/GX9900)			

****

	A-1089-463-A	PANEL BOARD, COMPLETE			
		**********			
		< CAPACITOR >			
C900	1-126-163-11	ELECT	4.7uF	20%	50V
C901	1-164-230-11	CERAMIC CHIP	220PF	5%	50V
C902	1-164-230-11	CERAMIC CHIP	220PF	5%	50V
C903	1-164-156-11	CERAMIC CHIP	0.1uF		25V
C904	1-164-156-11	CERAMIC CHIP	0.1uF		25V
C905	1-164-156-11	CERAMIC CHIP	0.1uF		25V
C906	1-162-964-11	CERAMIC CHIP	0.001uF	10%	50V
C907	1-162-964-11	CERAMIC CHIP	0.001uF	10%	50V
C908	1-164-230-11	CERAMIC CHIP	220PF	5%	50V
C909	1-164-230-11	CERAMIC CHIP	220PF	5%	50V
C910	1-164-156-11	CERAMIC CHIP	0.1uF		25V
C916	1-164-156-11	CERAMIC CHIP	0.1uF		25V
C917	1-164-156-11	CERAMIC CHIP	0.1uF		25V
C918	1-119-941-91	ELECT	470uF	20%	6.3V
C919	1-162-970-11	CERAMIC CHIP	0.01uF	10%	25V
C922	1-124-261-00	ELECT	10uF	20%	50V
C923	1-162-970-11	CERAMIC CHIP	0.01uF	10%	25V
C924	1-162-927-11	CERAMIC CHIP	100PF	5%	50V
C925	1-162-927-11	CERAMIC CHIP	100PF	5%	50V
C926	1-162-927-11	CERAMIC CHIP	100PF	5%	50V
C927	1-162-927-11	CERAMIC CHIP	100PF	5%	50V
C928	1-162-927-11	CERAMIC CHIP	100PF	5%	50V
C929	1-162-927-11	CERAMIC CHIP	100PF	5%	50V
C930	1-162-927-11	CERAMIC CHIP	100PF	5%	50V
C931	1-162-927-11	CERAMIC CHIP	100PF	5%	50V
C932	1-162-927-11	CERAMIC CHIP	100PF	5%	50V
C933	1-164-315-11	CERAMIC CHIP	470PF	5%	50V
C934	1-162-927-11	CERAMIC CHIP	100PF	5%	50V
C935	1-162-927-11	CERAMIC CHIP	100PF	5%	50V
C936	1-162-927-11	CERAMIC CHIP	100PF	5%	50V
C937	1-162-927-11	CERAMIC CHIP	100PF	5%	50V
C938	1-162-927-11	CERAMIC CHIP	100PF	5%	50V
C939	1-162-964-11	CERAMIC CHIP	0.001uF	10%	50V
C941	1-124-261-00	ELECT	10uF	20%	50V
C942	1-124-261-00	ELECT	10uF	20%	50V
C944	1-124-261-00	ELECT	10uF	20%	50V
C945	1-125-837-91	CERAMIC CHIP	1uF	10%	6.3V
C946	1-164-315-11	CERAMIC CHIP	470PF	5%	50V
C947	1-125-837-91	CERAMIC CHIP	1uF	10%	6.3V
C948	1-164-315-11	CERAMIC CHIP	470PF	5%	50V
C949	1-125-837-91	CERAMIC CHIP	1uF	10%	6.3V
C950	1-162-968-11	CERAMIC CHIP	0.0047uF	10%	50V
C951	1-125-837-91	CERAMIC CHIP	1uF	10%	6.3V
C952	1-162-968-11	CERAMIC CHIP	0.0047uF	10%	50V
C953	1-125-837-91	CERAMIC CHIP	1uF	10%	6.3V
C954	1-164-227-11	CERAMIC CHIP	0.022uF	10%	25V
C955	1-125-837-91	CERAMIC CHIP	1uF	10%	6.3V
C956	1-164-227-11	CERAMIC CHIP	0.022uF	10%	25V
C957	1-125-837-91	CERAMIC CHIP	1uF	10%	6.3V
C958	1-165-176-11	CERAMIC CHIP	0.047uF	10%	16V
C959	1-165-176-11	CERAMIC CHIP	0.047uF	10%	16V
C961	1-164-156-11	CERAMIC CHIP	0.1uF		25V
C966	1-164-156-11	CERAMIC CHIP	0.1uF		25V
C970	1-119-941-91	ELECT	470uF	20%	6.3V
C971	1-119-941-91	ELECT	470uF	20%	6.3V
C972	1-162-927-11	CERAMIC CHIP	100PF	5%	50V
C973	1-162-927-11	CERAMIC CHIP	100PF	5%	50V
C977	1-162-927-11	CERAMIC CHIP	100PF	5%	50V
C978	1-162-927-11	CERAMIC CHIP	100PF	5%	50V
C979	1-162-927-11	CERAMIC CHIP	100PF	5%	50V
C980	1-162-927-11	CERAMIC CHIP	100PF	5%	50V
C981	1-162-927-11	CERAMIC CHIP	100PF	5%	50V
C982	1-162-927-11	CERAMIC CHIP	100PF	5%	50V
C983	1-162-927-11	CERAMIC CHIP	100PF	5%	50V

PANEL

Ref. No.	Part No.	Description	Remarks
		< CONNECTOR >	
* CN902	1-569-934-11	SOCKET, CONNECTOR 17P	
CNS902	1-819-074-11	BOARD TO BOARD HEADER (8P)	
		< DIODE >	
D901	8-719-988-61	DIODE 1SS355TE-17	
D902	6-501-228-01	DIODE SELU5420E-STP15 (I/⏻)	
D903	6-500-522-21	DIODE 10EDB40-TB3	
D904	6-500-522-21	DIODE 10EDB40-TB3	
D905	8-719-056-83	DIODE UDZ-TE-17-6.8B	
D906	6-501-227-01	DIODE SELU5620S-STP15 (CD)	
D907	6-501-228-01	DIODE SELU5420E-STP15 (CD)	
D908	6-501-227-01	DIODE SELU5620S-STP15 (TUNER/BAND)	
D909	6-501-228-01	DIODE SELU5420E-STP15 (TUNER/BAND)	
D910	6-501-227-01	DIODE SELU5620S-STP15 (TAPE/A/B)	
D911	6-501-227-01	DIODE SELU5620S-STP15 (◀▶)	
D912	6-501-227-01	DIODE SELU5620S-STP15 (■)	
D913	6-501-227-01	DIODE SELU5620S-STP15 (TUNING/ ▶▶I+)	
D914	6-501-227-01	DIODE SELU5620S-STP15 (ALBUM/ ▶▶+)	
D915	6-501-228-01	DIODE SELU5420E-STP15 (◀▶)	
D916	6-501-228-01	DIODE SELU5420E-STP15 (TAPE A/B)	
D917	6-501-227-01	DIODE SELU5620S-STP15 (TV)	
D918	6-501-228-01	DIODE SELU5420E-STP15 (TV)	
D925	6-501-227-01	DIODE SELU5620S-STP15 (VIDEO/MD)	
D926	6-501-228-01	DIODE SELU5420E-STP15 (VIDEO/MD)	
D927	6-501-227-01	DIODE SELU5620S-STP15 (I/⏻)	
D928	6-501-227-01	DIODE SELU5620S-STP15 (❚❚)	
D929	6-501-227-01	DIODE SELU5620S-STP15 (TUNING/ I◀◀ -)	
D930	6-501-227-01	DIODE SELU5620S-STP15 (ALBUM/ ◀◀ -)	
		< JUMPER RESISTOR >	
FB901	1-216-864-11	SHORT CHIP 0	
		< FLUORESCENT INDICATOR >	
FL901	1-519-794-21	VACUUM FLUORESCENT DISPLAYS	
		< IC >	
IC902	6-805-078-01	IC MB90M407PF-G-144E1	
IC903	6-600-210-01	IC RPM7240-H8	
IC904	6-705-678-01	IC NJM2760V-TE2	
		< JUMPER RESISTOR/RESISTOR >	
JR909	1-216-864-11	SHORT CHIP 0	
JR910	1-216-864-11	SHORT CHIP 0	
JR911	1-216-864-11	SHORT CHIP 0	
JR912	1-216-296-11	SHORT CHIP 0	
JR913	1-216-864-11	SHORT CHIP 0	
JR914	1-216-864-11	SHORT CHIP 0	
JR915	1-216-809-11	METAL CHIP 100 5% 1/10W	
JR916	1-216-864-11	SHORT CHIP 0	
JR917	1-216-864-11	SHORT CHIP 0	
JR918	1-216-864-11	SHORT CHIP 0	
JR921	1-216-296-11	SHORT CHIP 0	
JR922	1-216-296-11	SHORT CHIP 0	

Ref. No.	Part No.	Description	Remarks
		< TRANSISTOR >	
Q900	8-729-027-23	TRANSISTOR DTA114EKA-T146	
Q901	8-729-027-56	TRANSISTOR DTC143TKA-T146	
Q902	8-729-027-56	TRANSISTOR DTC143TKA-T146	
Q903	8-729-027-23	TRANSISTOR DTA114EKA-T146	
Q904	8-729-106-60	TRANSISTOR 2SB1115A-YQ	
Q905	8-729-106-60	TRANSISTOR 2SB1115A-YQ	
Q906	8-729-027-43	TRANSISTOR DTC114EKA-T146	
Q907	8-729-027-43	TRANSISTOR DTC114EKA-T146	
Q908	8-729-027-43	TRANSISTOR DTC114EKA-T146	
Q909	8-729-027-43	TRANSISTOR DTC114EKA-T146	
Q910	8-729-027-43	TRANSISTOR DTC114EKA-T146	
Q914	8-729-027-56	TRANSISTOR DTC143TKA-T146	
Q915	8-729-027-43	TRANSISTOR DTC114EKA-T146	
Q916	8-729-027-43	TRANSISTOR DTC114EKA-T146	
Q917	8-729-027-43	TRANSISTOR DTC114EKA-T146	
Q918	8-729-027-43	TRANSISTOR DTC114EKA-T146	
Q919	8-729-027-43	TRANSISTOR DTC114EKA-T146	
Q920	8-729-027-43	TRANSISTOR DTC114EKA-T146	
		< RESISTOR >	
R900	1-216-833-11	METAL CHIP 10K 5% 1/10W	
R901	1-216-833-11	METAL CHIP 10K 5% 1/10W	
R902	1-216-833-11	METAL CHIP 10K 5% 1/10W	
R903	1-216-809-11	METAL CHIP 100 5% 1/10W	
R904	1-216-809-11	METAL CHIP 100 5% 1/10W	
R905	1-216-835-11	METAL CHIP 15K 5% 1/10W	
R906	1-216-835-11	METAL CHIP 15K 5% 1/10W	
R907	1-216-835-11	METAL CHIP 15K 5% 1/10W	
R908	1-216-809-11	METAL CHIP 100 5% 1/10W	
R909	1-216-833-11	METAL CHIP 10K 5% 1/10W	
R910	1-216-823-11	METAL CHIP 1.5K 5% 1/10W	
R911	1-216-823-11	METAL CHIP 1.5K 5% 1/10W	
R912	1-216-809-11	METAL CHIP 100 5% 1/10W	
R914	1-216-823-11	METAL CHIP 1.5K 5% 1/10W	
R915	1-216-823-11	METAL CHIP 1.5K 5% 1/10W	
R916	1-216-823-11	METAL CHIP 1.5K 5% 1/10W	
R917	1-216-845-11	METAL CHIP 100K 5% 1/10W	
R918	1-216-845-11	METAL CHIP 100K 5% 1/10W	
R919	1-216-845-11	METAL CHIP 100K 5% 1/10W	
R920	1-216-833-11	METAL CHIP 10K 5% 1/10W	
R922	1-216-857-11	METAL CHIP 1M 5% 1/10W	
R931	1-216-823-11	METAL CHIP 1.5K 5% 1/10W	
R932	1-216-823-11	METAL CHIP 1.5K 5% 1/10W	
R933	1-216-823-11	METAL CHIP 1.5K 5% 1/10W	
R939	1-216-821-11	METAL CHIP 1K 5% 1/10W	
R940	1-216-833-11	METAL CHIP 10K 5% 1/10W	
R941	1-216-809-11	METAL CHIP 100 5% 1/10W	
R942	1-216-809-11	METAL CHIP 100 5% 1/10W	
R943	1-216-823-11	METAL CHIP 1.5K 5% 1/10W	
R944	1-216-805-11	METAL CHIP 47 5% 1/10W	
R945	1-216-839-11	METAL CHIP 33K 5% 1/10W	
R946	1-216-842-11	METAL CHIP 56K 5% 1/10W	
R947	1-216-821-11	METAL CHIP 1K 5% 1/10W	
R948	1-218-867-11	METAL CHIP 6.8K 0.5% 1/10W	
R949	1-216-821-11	METAL CHIP 1K 5% 1/10W	
R950	1-216-821-11	METAL CHIP 1K 5% 1/10W	

PANEL

Ref. No.	Part No.	Description			Remarks
R951	1-216-830-11	METAL CHIP	5.6K	5%	1/10W
R952	1-216-821-11	METAL CHIP	1K	5%	1/10W
R953	1-216-821-11	METAL CHIP	1K	5%	1/10W
R954	1-216-833-11	METAL CHIP	10K	5%	1/10W
R956	1-216-826-11	METAL CHIP	2.7K	5%	1/10W
R957	1-216-823-11	METAL CHIP	1.5K	5%	1/10W
R958	1-216-817-11	METAL CHIP	470	5%	1/10W
R959	1-216-819-11	METAL CHIP	680	5%	1/10W
R960	1-216-821-11	METAL CHIP	1K	5%	1/10W
R961	1-216-823-11	METAL CHIP	1.5K	5%	1/10W
R962	1-216-823-11	METAL CHIP	1.5K	5%	1/10W
R963	1-216-825-11	METAL CHIP	2.2K	5%	1/10W
R964	1-216-827-11	METAL CHIP	3.3K	5%	1/10W
R965	1-216-829-11	METAL CHIP	4.7K	5%	1/10W
R966	1-218-867-11	METAL CHIP	6.8K	0.5%	1/10W
R967	1-216-833-11	METAL CHIP	10K	5%	1/10W
R968	1-216-835-11	METAL CHIP	15K	5%	1/10W
R969	1-216-819-11	METAL CHIP	680	5%	1/10W
R970	1-218-867-11	METAL CHIP	6.8K	0.5%	1/10W
R971	1-216-821-11	METAL CHIP	1K	5%	1/10W
R972	1-216-819-11	METAL CHIP	680	5%	1/10W
R973	1-216-819-11	METAL CHIP	680	5%	1/10W
R974	1-216-819-11	METAL CHIP	680	5%	1/10W
R975	1-216-817-11	METAL CHIP	470	5%	1/10W
R977	1-216-821-11	METAL CHIP	1K	5%	1/10W
R978	1-216-817-11	METAL CHIP	470	5%	1/10W
R980	1-216-821-11	METAL CHIP	1K	5%	1/10W
R981	1-216-819-11	METAL CHIP	680	5%	1/10W
R982	1-216-819-11	METAL CHIP	680	5%	1/10W
R983	1-216-819-11	METAL CHIP	680	5%	1/10W
R984	1-216-819-11	METAL CHIP	680	5%	1/10W
R985	1-216-819-11	METAL CHIP	680	5%	1/10W
R986	1-216-819-11	METAL CHIP	680	5%	1/10W
R987	1-216-819-11	METAL CHIP	680	5%	1/10W
R988	1-216-819-11	METAL CHIP	680	5%	1/10W
R989	1-216-819-11	METAL CHIP	680	5%	1/10W
R990	1-216-819-11	METAL CHIP	680	5%	1/10W
R991	1-216-819-11	METAL CHIP	680	5%	1/10W
R992	1-216-819-11	METAL CHIP	680	5%	1/10W
R993	1-216-819-11	METAL CHIP	680	5%	1/10W
R994	1-216-819-11	METAL CHIP	680	5%	1/10W
R995	1-216-819-11	METAL CHIP	680	5%	1/10W
R996	1-216-819-11	METAL CHIP	680	5%	1/10W
R997	1-216-819-11	METAL CHIP	680	5%	1/10W
R999	1-216-864-11	SHORT CHIP	0		
R1112	1-216-823-11	METAL CHIP	1.5K	5%	1/10W
R1135	1-216-819-11	METAL CHIP	680	5%	1/10W
R1136	1-216-819-11	METAL CHIP	680	5%	1/10W
R1137	1-216-819-11	METAL CHIP	680	5%	1/10W
R1141	1-216-823-11	METAL CHIP	1.5K	5%	1/10W
R1142	1-216-823-11	METAL CHIP	1.5K	5%	1/10W
R1143	1-216-823-11	METAL CHIP	1.5K	5%	1/10W
R1147	1-216-823-11	METAL CHIP	1.5K	5%	1/10W
R1148	1-216-823-11	METAL CHIP	1.5K	5%	1/10W
R1160	1-218-867-11	METAL CHIP	6.8K	0.5%	1/10W
R1161	1-216-833-11	METAL CHIP	10K	5%	1/10W
R1162	1-218-867-11	METAL CHIP	6.8K	0.5%	1/10W
R1163	1-216-823-11	METAL CHIP	1.5K	5%	1/10W
R1164	1-216-825-11	METAL CHIP	2.2K	5%	1/10W
R1165	1-216-827-11	METAL CHIP	3.3K	5%	1/10W
R1166	1-216-829-11	METAL CHIP	4.7K	5%	1/10W
R1167	1-216-814-11	METAL CHIP	270	5%	1/10W
R1168	1-216-823-11	METAL CHIP	1.5K	5%	1/10W
R1175	1-216-817-11	METAL CHIP	470	5%	1/10W
R1176	1-216-819-11	METAL CHIP	680	5%	1/10W
R1177	1-216-821-11	METAL CHIP	1K	5%	1/10W
R1178	1-216-823-11	METAL CHIP	1.5K	5%	1/10W
R1179	1-216-823-11	METAL CHIP	1.5K	5%	1/10W
R1180	1-216-814-11	METAL CHIP	270	5%	1/10W
R1183	1-216-808-11	METAL CHIP	82	5%	1/10W
R1186	1-216-829-11	METAL CHIP	4.7K	5%	1/10W
R1187	1-216-833-11	METAL CHIP	10K	5%	1/10W
R1188	1-216-821-11	METAL CHIP	1K	5%	1/10W
R1189	1-216-801-11	METAL CHIP	22	5%	1/10W
R1194	1-216-823-11	METAL CHIP	1.5K	5%	1/10W
R1195	1-216-823-11	METAL CHIP	1.5K	5%	1/10W
R1196	1-216-823-11	METAL CHIP	1.5K	5%	1/10W
R1197	1-216-823-11	METAL CHIP	1.5K	5%	1/10W
R1198	1-216-823-11	METAL CHIP	1.5K	5%	1/10W
R1199	1-216-823-11	METAL CHIP	1.5K	5%	1/10W
		< SWITCH >			
S900	1-762-875-21	SWITCH, KEYBOARD (DISPLAY)			
S901	1-762-875-21	SWITCH, KEYBOARD (MP3 BOOSTER)			
S902	1-762-875-21	SWITCH, KEYBOARD (EQ BAND)			
S903	1-762-875-21	SWITCH, KEYBOARD (DIRECTION/TUNER MEMORY)			
S904	1-762-875-21	SWITCH, KEYBOARD (REC PAUSE/START)			
S910	1-762-875-21	SWITCH, KEYBOARD (VIDEO/MD)			
S911	1-762-875-21	SWITCH, KEYBOARD (TV)			
S912	1-762-875-21	SWITCH, KEYBOARD (CD SYNC)			
S913	1-762-875-21	SWITCH, KEYBOARD (◀▶)			
S914	1-762-875-21	SWITCH, KEYBOARD (❚❚)			
S915	1-762-875-21	SWITCH, KEYBOARD (■)			
S916	1-479-229-11	ROTARY ENCODER (TUNING)			
S917	1-771-963-11	SWITCH, ROTARY (ALBUM)			
S918	1-762-875-21	SWITCH, KEYBOARD (TAPE A/B)			
S919	1-762-875-21	SWITCH, KEYBOARD (TUNER/BAND)			
S920	1-762-875-21	SWITCH, KEYBOARD (CD)			
S925	1-762-875-21	SWITCH, KEYBOARD (I/⏻)			
S927	1-762-875-21	SWITCH, KEYBOARD (AMP MENU)			
S928	1-762-875-21	SWITCH, KEYBOARD (ILLUMINATION)			
S929	1-762-875-21	SWITCH, KEYBOARD (SURR SPEAKER MODE)			
S930	1-762-875-21	SWITCH, KEYBOARD (GROOVE)			
S931	1-762-875-21	SWITCH, KEYBOARD (SOUND FLASH)			
S932	1-762-875-21	SWITCH, KEYBOARD (ENTER)			
S970	1-418-725-51	ENCODER, ROTARY (12 TYPE) (VOLUME)			
		< VIBRATOR >			
X901	1-781-282-51	VIBRATOR, CERAMIC (4MHz)			

****

PRIMARY | SENSOR | SURROUND | SW | TRANS

Ref. No.	Part No.	Description			Remarks
	A-1089-510-A	PRIMARY BOARD, COMPLETE (E2, E3, E51)			
	A-1089-525-A	PRIMARY BOARD, COMPLETE (US, AUS)			
	A-1113-478-A	PRIMARY BOARD, COMPLETE (AR)			
		**********			
		< CAPACITOR >			
C1201	1-164-156-11	CERAMIC CHIP	0.1uF		25V
C1202	1-164-156-11	CERAMIC CHIP	0.1uF		25V
C1204	1-164-156-11	CERAMIC CHIP	0.1uF		25V
C1206	1-126-916-11	ELECT	1000uF	20%	6.3V
		< CONNECTOR >			
CN1200	1-785-329-11	PIN, CONNECTOR (LIGHT ANGLE) 3P			
CN1202	1-564-321-00	PIN, CONNECTOR (3.96mm PITCH) 2P			
CN1204	1-564-321-00	PIN, CONNECTOR (3.96mm PITCH) 2P			(US, AUS)
CN1204	1-568-106-11	PIN, CONNECTOR (3.96mm PITCH) 4P			(E2, E3, E51, AR)
		< DIODE >			
D1200	8-719-988-61	DIODE 1SS355TE-17			
		< JUMPER RESISTOR >			
JR1202	1-216-864-11	SHORT CHIP	0		
		< COIL >			
L1201	1-410-666-31	INDUCTOR	18uH		
		< TRANSISTOR >			
Q1200	8-729-120-28	TRANSISTOR 2SC1623-L5L6			
		< RESISTOR >			
R1200	1-216-829-11	METAL CHIP	4.7K	5%	1/10W
R1201	1-216-845-11	METAL CHIP	100K	5%	1/10W
		< RELAY >			
⚠RY1200	1-755-299-11	RELAY			
		< SWITCH >			
⚠S1200	1-771-291-31	SWITCH, POWER (VOLTAGE SELECTOR)			(E2, E3, E51)
**********					
	1-687-132-12	SENSOR BOARD			
		**********			
		< CONNECTOR >			
CN731	1-785-329-21	PIN, CONNECTOR (LIGHT ANGLE) 3P			
		< IC >			
IC731	6-600-022-01	IC RPI-576			
**********					
	A-1089-321-A	SURROUND BOARD, COMPLETE			
		**********			
**********					

Ref. No.	Part No.	Description			Remarks
	1-687-669-12	SW BOARD			
		*********			
	1-786-514-11	SWITCH, LEVER (SLIDE) (LEVEL SW)			
**********					
	A-1089-507-A	TRANS BOARD, COMPLETE (GNX60/GNX70)			
	A-1089-588-A	TRANS BOARD, COMPLETE (GX9900)			
		**********			
		< CAPACITOR >			
C1262	1-126-964-11	ELECT	10uF	20%	50V
C1263	1-126-968-11	ELECT	100uF	20%	50V
C1292	1-128-576-11	ELECT	100uF	20%	63V
		< CONNECTOR >			
* CN1212	1-564-522-11	PLUG, CONNECTOR 7P			
* CN1213	1-564-521-11	PLUG, CONNECTOR 6P			
		< DIODE >			
D1264	8-719-071-83	DIODE HZU36BTRF			
D1292	6-500-522-21	DIODE 10EDB40-TB3			
		< FUSE HOLDER >			
FH1241	1-533-217-41	HOLDER, FUSE			
FH1242	1-533-217-41	HOLDER, FUSE			
FH1251	1-533-217-41	HOLDER, FUSE			
FH1252	1-533-217-41	HOLDER, FUSE			
FH1261	1-533-217-41	HOLDER, FUSE			
FH1262	1-533-217-41	HOLDER, FUSE			
FH1271	1-533-217-41	HOLDER, FUSE			
FH1272	1-533-217-41	HOLDER, FUSE			
FH1281	1-533-217-41	HOLDER, FUSE			
FH1282	1-533-217-41	HOLDER, FUSE			
		< TRANSISTOR >			
Q1264	8-729-024-93	TRANSISTOR 2SB1565E			
		< RESISTOR >			
⚠R1233	1-219-237-11	SOLID	3.3M	20%	1/2W (GX9900)
R1262	1-216-832-11	METAL CHIP	8.2K	5%	1/10W
R1263	1-216-832-11	METAL CHIP	8.2K	5%	1/10W
R1264	1-216-821-11	METAL CHIP	1K	5%	1/10W
⚠R1292	1-219-124-11	FUSIBLE	0.68	5%	1/4W
**********					
		MISCELLANEOUS			
		**********			
⚠	1-569-007-11	ADAPTOR, CONVERSION 2P (E3)			
⚠	1-569-008-21	ADAPTOR, CONVERSION 2P (E51)			
5	1-693-671-11	TUNER (TM-10E) (GNX60/GNX70)			
5	1-693-672-11	TUNER (TM-10U) (GX9900)			
⚠7	1-468-737-21	POWER, SWITCHING			
8	1-824-048-12	WIRE (FLAT TYPE) (27 CORE)			
65	1-828-992-11	WIRE (FLAT TYPE) (17 CORE)			
71	1-797-165-11	DECK, MECHANICAL (CMAT5Z2)			
106	1-828-956-11	WIRE (FLAT TYPE) (9 CORE)			
⚠107	1-777-071-53	CORD, POWER (E51)			

Ref. No.	Part No.	Description	Remarks
⚠107	1-783-820-11	CORD, POWER (GX9900)	
⚠107	1-783-941-12	CORD, POWER (AR)	
⚠107	1-827-295-22	CORD, POWER (AUS)	
⚠107	1-829-627-31	POWER-SUPPLY CORD (E2, E3)	
109	1-828-972-11	WIRE (FLAT TYPE) (13 CORE)	
152	1-776-182-11	WIRE (FLAT TYPE) (5 CORE)	
226	1-827-992-11	WIRE (FLAT TYPE) (16 CORE)	
⚠229	8-820-244-01	OPTICAL PICK-UP KSM-215DCP/C2NP	
230	1-471-035-11	MAGNET ASSY	
⚠F1241	1-576-537-12	FUSE, GLASS TUBE (DIA.5) (T8AL/125V)	(GX9900)
⚠F1241	1-576-655-12	FUSE, GLASS TUBE (DIA. 5) (T8AL/250V)	(GNX60/GNX70)
⚠F1251	1-576-537-12	FUSE, GLASS TUBE (DIA.5) (T8AL/125V)	(GX9900)
⚠F1251	1-576-655-12	FUSE, GLASS TUBE (DIA. 5) (T8AL/250V)	(GNX60/GNX70)
⚠F1261	1-576-537-12	FUSE, GLASS TUBE (DIA.5) (T8AL/125V)	(GX9900)
⚠F1261	1-576-655-12	FUSE, GLASS TUBE (DIA. 5) (T8AL/250V)	(GNX60/GNX70)
⚠F1271	1-576-537-12	FUSE, GLASS TUBE (DIA.5) (T8AL/125V)	(GX9900)
⚠F1271	1-576-655-12	FUSE, GLASS TUBE (DIA. 5) (T8AL/250V)	(GNX60/GNX70)
⚠F1281	1-533-451-12	FUSE, GLASS TUBE (DIA. 5) (T3.15AL/125V)	(GX9900)
⚠F1281	1-533-470-12	FUSE, GLASS TUBE (DIA. 5) (T3.15AL/250V)	(GNX60/GNX70)
FL901	1-519-794-21	VACUUM FLUORESCENT DISPLAYS	
M741	A-4723-963-A	MOTOR ASSY, TABLE	
M751	A-4737-553-A	MOTOR ASSY, LOADING	
M891	1-763-372-11	FAN, DC	
RE701	1-477-680-12	ENCODER, ROTARY	
⚠T1200	1-443-542-11	POWER TRANSFORMER (GNX60)	
⚠T1200	1-443-543-11	POWER TRANSFORMER (GNX70)	
⚠T1200	1-443-544-11	POWER TRANSFORMER (GX9900)	

REVISION HISTORY

Clicking the version allows you to jump to the revised page.
Also, clicking the version at the upper right on the revised page allows you to jump to the next revised page.

Ver.	Date	Description of Revision
1.0	2005.03	New