CFD-G700CP/G770CP/ G770CPK

SERVICE MANUAL

Ver. 1.0 2007.03

US Model
CFD-G700CP
Canadian Model
CFD-G770CPK
E Model
CFD-G770CP/G770CPK
Australian Model
CFD-G770CPK

Photo : CFD-G770CPK

CD Section	Model Name Using Similar Mechanism	CFD-G505/G555CP/G555CPK
	CD Mechanism Type	KSM-213CDP/C2NP
	Optical Pick-up Type	KSS-213C
TAPE Section	Model Name Using Similar Mechanism	HCD-EC50
	Tape Transport Mechanism Type	H21SB-C05

SPECIFICATIONS

AUDIO POWER SPECIFICATIONS (US)
POWER OUTPUT AND TOTAL HARMONIC DISTORTION
With 3.2-ohm loads, both channels driven from 1 000 - 10 000 Hz; rated 3 W per channel-minimum RMS power, with no more than 10 % total harmonic distortion in AC operation.
Woofer with 4-ohm loads, driven from 50 - 150 Hz; rated 6 W minimum RMS power, with no more than 10 % total harmonic distortion in AC operation.

Other specifications

CD player section
System
Compact disc digital audio system
Laser diode properties
Emission duration: Continuous
Laser output: Less than 44.6 µW
(Th is output is the value measured at a distance of about 200 mm from the objective lens surface on the optical pick-up block with 7 mm aperture.)
Number of channels
2
Frequency response
20 - 20 000 Hz +1/–2 dB
Wow and fl utter
Below measurable limit

Radio section
Frequency range
FM: 87.5 - 108 MHz
AM: 530 - 1 710 kHz
(G700CP: US/G770CPK: CND, MX, E92)
AM: 531 - 1 611 kHz (G770CPK: AUS)
AM: 531 - 1 611 kHz (9 kHz step)(G770CP)
AM: 530 - 1 610 kHz (10 kHz step)(G770CP)
Antennas
FM: Telescopic antenna
AM: Built-in ferrite bar antenna

Cassette-corder section
Recording system
4-track 2 channel stereo
Fast winding time
Approx. 150 s (sec.) with Sony cassette C-60
Frequency response
TYPE I (normal): 70 - 13 000 Hz

General
Speaker
Full range: 10 cm (4 in.) dia., 3.2 Ω, cone type (2)
Woofer: 13 cm (5 1/8 in.) dia., 4 Ω, cone type (1)
Tweeter: 2 cm (13/16 in.) dia. (2)
Input
Built-in audio cable with stereo-mini plug: Minimum input level 245 mV
AUDIO IN Jack (stereo minijack): Minimum input level 245 mV
MIC MIX (microphone) jack (monaural minijack): Sensitivity 2.5 mV, for low impedance microphone
Minimum input level 2.5 mV (G770CPK)
Outputs
Headphones jack (stereo minijack)
For 16 - 68 Ω impedance headphones
Power output
4 W + 4 W (at 3.2 Ω, 10% harmonic distortion)
Woofer:
12 W (at 4 Ω, 10% harmonic distortion)
Power requirements
For CD radio cassette-corder:
120 V AC, 60 Hz
(G700CP: US/G770CPK: CND, MX, E92)
230 - 240 V AC, 50 Hz (G700CP: SP)
230 V AC, 50 Hz
(G700CP: E41/G770CPK: AUS)
12 V DC, 8 R20 (size D) batteries
For remote control:
3 V DC, 2 R6 (size AA) batteries
Power consumption
AC 28 W

— Continued on next page —

- Abbreviation

AUS	: Australian model	E92	: AC 120V area in E model
CND	: Canadian model	MX	: Mexican model
E41	: AC 230V area in E model	SP	: Singapore model

CD RADIO CASSETTE-CORDER

9-887-620-01
2007C16-1
© 2007.03

Sony Corporation
Personal Audio Division
Published by Sony Techno Create Corporation

SONY®

Battery life
For CD radio cassette-corder:

FM recording
Sony R20P: approx. 6 h
Sony alkaline LR20: approx. 18 h
Tape playback
Sony R20P: approx. 1.5 h
Sony alkaline LR20: approx. 6 h
CD playback
Sony R20P: approx. 1 h
Sony alkaline LR20: approx. 4 h

Dimensions
Approx. 551 × 247 × 370 mm (w/h/d)
(21 3/4 × 9 3/4 × 14 5/8 inches) (incl. projecting parts)
Mass
Approx. 8.4 kg (18 lb. 9 oz) (incl. batteries)
Supplied accessories
AC power cord (1)
Remote control (1)

Design and specifications are subject to change without notice.

Notes on chip component replacement

- Never reuse a disconnected chip component.
- Notice that the minus side of a tantalum capacitor may be damaged by heat.

Flexible Circuit Board Repairing

- Keep the temperature of soldering iron around 270˚C during repairing.
- Do not touch the soldering iron on the same conductor of the circuit board (within 3 times).
- Be careful not to apply force on the conductor when soldering or unsoldering.

UNLEADED SOLDER

Boards requiring use of unleaded solder are printed with the lead-free mark (LF) indicating the solder contains no lead.
(Caution: Some printed circuit boards may not come printed with the lead free mark due to their particular size)

: LEAD FREE MARK

Unleaded solder has the following characteristics.

- Unleaded solder melts at a temperature about 40 °C higher than ordinary solder.
  Ordinary soldering irons can be used but the iron tip has to be applied to the solder joint for a slightly longer time.
  Soldering irons using a temperature regulator should be set to about 350 °C.
  Caution: The printed pattern (copper foil) may peel away if the heated tip is applied for too long, so be careful!
- Strong viscosity
  Unleaded solder is more viscou-s (sticky, less prone to flow) than ordinary solder so use caution not to let solder bridges occur such as on IC pins, etc.
- Usable with ordinary solder
  It is best to use only unleaded solder but unleaded solder may also be added to ordinary solder.

SAFETY-RELATED COMPONENT WARNING!!

COMPONENTS IDENTIFIED BY MARK ⚠ OR DOTTED LINE WITH MARK ⚠ ON THE SCHEMATIC DIAGRAMS AND IN THE PARTS LIST ARE CRITICAL TO SAFE OPERATION. REPLACE THESE COMPONENTS WITH SONY PARTS WHOSE PART NUMBERS APPEAR AS SHOWN IN THIS MANUAL OR IN SUPPLEMENTS PUBLISHED BY SONY.

ATTENTION AU COMPOSANT AYANT RAPPORT À LA SÉCURITÉ!

LES COMPOSANTS IDENTIFIÉS PAR UNE MARQUE ⚠ SUR LES DIAGRAMMES SCHÉMATIQUES ET LA LISTE DES PIÈCES SONT CRITIQUES POUR LA SÉCURITÉ DE FONCTIONNEMENT. NE REMPLACER CES COM- POSANTS QUE PAR DES PIÈCES SONY DONT LES NUMÉROS SONT DONNÉS DANS CE MANUEL OU DANS LES SUPPLÉMENTS PUBLIÉS PAR SONY.

TABLE OF CONTENTS

1. SERVICING NOTES 4

2. GENERAL 5

3. DISASSEMBLY
3-1. Disassembly Flow 11
3-2. Cabinet (Upper) (1) Section 12
3-3. Cabinet (Upper) (2) Section 12
3-4. Cabinet (Front) Section 13
3-5. LCD Board, AUDIO IN Board, HEADPHONE Board, POWER KEY Board, MICROPHONE Board (CFD-G770CPK), VOLUME KEY Board 13
3-6. Front Panel 14
3-7. LED Board 14
3-8. Speaker (13cm) 15
3-9. Speaker (10cm) 15
3-10. POWER Board, BATTERY Board, D-LIGHT Board (CFD-G700CP) 16
3-11. WOOFER KEY Board, CD KEY Board 17
3-12. TUNER Board 17
3-13. Tape Mechanism Deck 18
3-14. MAIN Board 18
3-15. CD Block Section 19
3-16. Optical Pick-up (KSM-213CDP/C2NP) 19
3-17. TC Board 20
3-18. Main Belt, Sub Belt 20

4. TEST MODE 21

5. MECHANICAL ADJUSTMENTS 23

6. ELECTRICAL ADJUSTMENTS 23

7. DIAGRAMS
7-1. Block Diagram – TUNER/CD Section – 28
7-2. Block Diagram – MAIN Section – 29
7-3. Printed Wiring Board – BD90 Board – 30
7-4. Schematic Diagram – BD90 Board – 31
7-5. Printed Wiring Board – TUNER Board – 32
7-6. Schematic Diagram – TUNER Board – 33
7-7. Printed Wiring Board – TC Board – 34
7-8. Schematic Diagram – TC Board – 35
7-9. Printed Wiring Board – MAIN Board – 36
7-10. Printed Wiring Boards – AUDIO Section – 37
7-11. Printed Wiring Boards – CONTROL Section – 38
7-12. Schematic Diagram – MAIN (1/3), AUDIO Section – .. 39
7-13. Schematic Diagram – MAIN Section (2/3) – 40
7-14. Schematic Diagram – MAIN (3/3), CONTROL Section – 41
7-15. Printed Wiring Boards – POWER Section – 42
7-16. Schematic Diagram – POWER Section – 43

8. EXPLODED VIEWS
8-1. Overall Section 51
8-2. Cabinet (Front) Section 52
8-3. Cabinet (Rear) Section 53
8-4. Cabinet (Upper) Section-1 54
8-5. Cabinet (Upper) Section-2 55
8-6. Tape Mechanism Deck Section 56

9. ELECTRICAL PARTS LIST 57

SECTION 1
SERVICING NOTES

SAFETY CHECK-OUT

After correcting the original service problem, perform the following safety check before releasing the set to the customer:
Check the antenna terminals, metal trim, “metallized” knobs, screws, and all other exposed metal parts for AC leakage.
Check leakage as described below.

LEAKAGE TEST

The AC leakage from any exposed metal part to earth ground and from all exposed metal parts to any exposed metal part having a return to chassis, must not exceed 0.5 mA (500 microamperes.). Leakage current can be measured by any one of three methods.

1. A commercial leakage tester, such as the Simpson 229 or RCA WT-540A. Follow the manufacturers’ instructions to use these instruments.
2. A battery-operated AC milliammeter. The Data Precision 245 digital multimeter is suitable for this job.
3. Measuring the voltage drop across a resistor by means of a VOM or battery-operated AC voltmeter. The “limit” indication is 0.75 V, so analog meters must have an accurate low-voltage scale. The Simpson 250 and Sanwa SH-63Trd are examples of a passive VOM that is suitable. Nearly all battery operated digital multimeters that have a 2 V AC range are suitable. (See Fig. A)

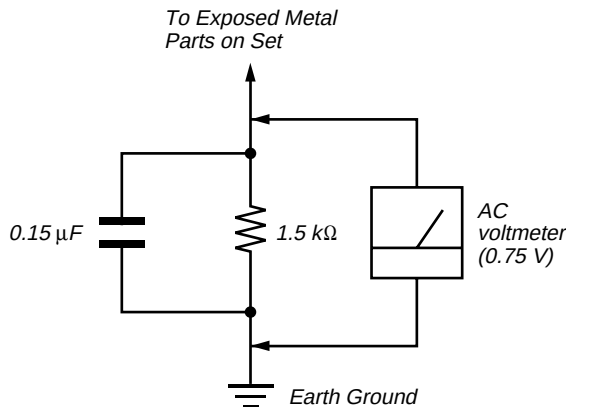

Fig. A. Using an AC voltmeter to check AC leakage.

This appliance is classified as a CLASS 1 LASER product. The CLASS 1 LASER PRODUCT MARKING is located on the rear exterior.

Laser component in this product is capable of emitting radiation exceeding the limit for Class 1.

NOTES ON HANDLING THE OPTICAL PICK-UP BLOCK OR BASE UNIT

The laser diode in the optical pick-up block may suffer electrostatic breakdown because of the potential difference generated by the charged electrostatic load, etc. on clothing and the human body.
During repair, pay attention to electrostatic breakdown and also use the procedure in the printed matter which is included in the repair parts.
The flexible board is easily damaged and should be handled with care.

NOTES ON LASER DIODE EMISSION CHECK

The laser beam on this model is concentrated so as to be focused on the disc reflective surface by the objective lens in the optical pick-up block. Therefore, when checking the laser diode emission, observe more than 30 cm away from the objective lens.

CHUCK PLATE JIG ON REPAIRING

On repairing CD section, playing a disc without the CD lid, use Chuck Plate Jig.

- Code number of Chuck Plate Jig : X-4918-255-1

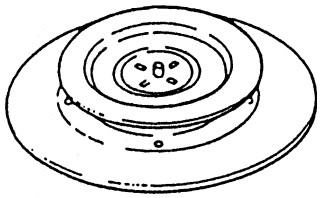

LASER DIODE AND FOCUS SEARCH OPERATION CHECK

1. Turn ON the POWER button.
2. Open the CD lid.
3. Turn on SW2 with screwdriver, etc. as following figure.
4. Press the ▶II (CD) button.
5. Confirm the laser diode emission while observing the objecting lens. When there is no emission, Auto Power Control circuit or Optical Pick-up is broken.
   Objective lens moves up and down three times for focus search.

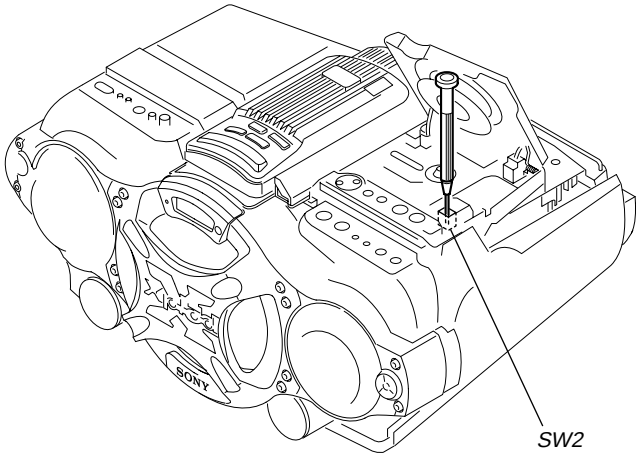

SECTION 2
GENERAL

This section is extracted from instruction manual.

CFD-G700CP (1/2)

Basic Operations

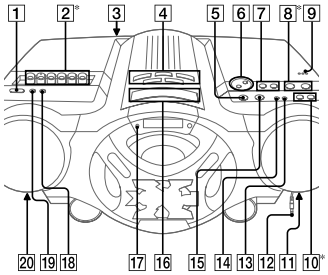

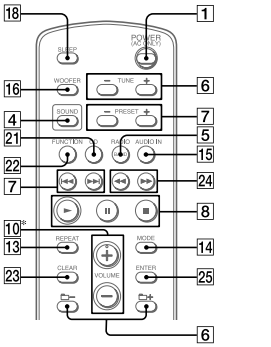

* VOL + (VOLUME + on the remote) 10, ►II 8 and ► 2 (on the unit) have a tactile dot.

Before using the unit

To turn on/off the power
Press POWER 1.

To adjust the volume
Press VOL +, – (VOLUME +, – on the remote) 10.

To listen through headphones
Connect the headphones to the ∩ (headphones) jack 20.

To select the sound characteristic
Press ROCK, DANCE, SALSA, REGGAETON or FLAT 4 to select the kind of audio emphasis that you want. (On the remote, press SOUND 4 repeatedly.)

To reinforce the bass sound
Press POWER DRIVE WOOFER (WOOFER on the remote) 16 to select WOOFER or WOOFER on the display. WOOFER is more effective. When the WOOFER function works, the ring on the front panel lights up.
To return to normal sound, press the button repeatedly until the indication disappears from the display.

Notes
- While the sleeping timer is on, the ring does not light, even if the WOOFER function is used.
- When you use the headphones, the WOOFER function does not work.

Playing a CD/MP3 disc

1 Press ⏏ PUSH OPEN/CLOSE 9 on the unit, and place a disc with the label side up on the CD compartment.
To close the CD compartment, press ⏏ PUSH OPEN/CLOSE 9 on the unit.

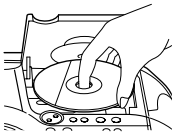

2 Press ►II on the unit (► on the remote) 8.
The unit plays all the tracks/MP3 files once.
When you place MP3 discs, "MP3" appears in the display after the unit reads the file information.

Audio CD

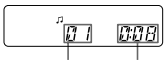

Track number Playing time

MP3 disc

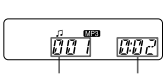

MP3 file number After the song title is displayed, the playing time* will appear.

* If the playing time is more than 100 minutes, it appears "--:--" in the display.

To	Press
Pause playback	►II on the unit (II on the remote) 8. To resume play, press it again.
Stop playback	■ 8.
Go to the next track/MP3 file	►►I 7.
Go back to the previous track/MP3 file	I◄◄ 7.
Select a folder on an MP3 disc	🗀 + to go forward and 🗀 – to go backward 6.
Locate a point while listening to the sound	►►I (forward) or I◄◄ (backward) 7 while playing and hold it until you find the point. (◄◄ or ►► 24 on the remote)
Locate a point while observing the display	►►I (forward) or I◄◄ (backward) 7 in pause and hold it until you find the point. (◄◄ or ►► 24 on the remote)
Remove the CD	⏏ PUSH OPEN/CLOSE 9.

Tips
- Playback starts from the track/MP3 file you last stopped playing (Resume play). During stop, the track/MP3 file number to be played is displayed.
- To cancel the resume play (to start play from the beginning of the first track/MP3 file), press ■ 8 while the CD is stopped. When you open the CD compartment or turn off the unit, the resume play is also canceled.

Note
You cannot locate a specific track if "SHUF" or "PGM" is lit in the display.
Press ■ 8, and then press MODE 14 repeatedly until "SHUF" and "PGM" disappear from the display.

Example of folder structure and playing order
The playing order of the folders and files is as follows:

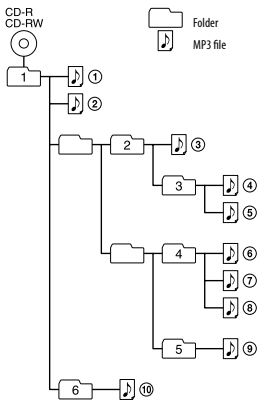

Notes on MP3 discs
- When the disc is inserted, the unit reads all the files on that disc. During this time, "READING" is displayed. If there are many folders or non-MP3 files on the disc, it may take a long time for play to begin or for the next MP3 file to start play.
  We recommend that you do not save unnecessary folders or files other than MP3 ones in the disc to be used for MP3 listening.
- A folder that does not have any MP3 file is skipped.
- Maximum number of files: 255
  Maximum number of folders: 150 (including the root folder)
  Maximum number of folders and files in total: 256
  Maximum directory levels: 8
- Folder names and file names can be displayed with up to 30 characters including quotation marks.
- The characters A - Z, 0 - 9, and _ can be displayed on this unit. Other characters are displayed as "_".
- This unit conforms to Version 1.0, 1.1, 2.2, 2.3 and 2.4 of the ID3 tag format. When the file has the ID3 tag information, "song title", "artist name" and "album name" can be displayed. If the file does not have the ID3 tag information, "NO TITLE" appears instead of song title, "NO ARTIST" appears instead of artist name and "NO ALBUM" appears instead of album name. The ID3 tag information can be displayed with up to 15 characters.
- When naming, be sure to add the file extension "mp3" to the file name.
- If you put the extension "mp3" to a file other than an MP3 file, the unit cannot recognize the file properly and will generate random noise that could damage your speakers.
- The file name does not correspond to the ID3 tag.

Listening to the radio

1 Press RADIO/BAND•AUTO PRESET 5 on the unit (RADIO/BAND 5 on the remote) repeatedly.
Each time you press the button, the indication changes as follows:
"FM" → "AM"

2 Hold down 🗀TUNE + or – 6 until the frequency digits begin to change in the display.
The unit automatically scans the radio frequencies and stops when it finds a clear station.
If you cannot tune in a station, press 🗀TUNE + or – 6 repeatedly to change the frequency step by step.
When an FM stereo broadcast is received, "ST" appears.

Tip
If the FM broadcast is noisy, press MODE 14 until "Mono" appears in the display and the radio will play in monaural.

Playing a tape

Use buttons on the unit for the operation.

1 Press ■⏏ 2 on the unit, and insert the tape into the tape compartment with the side you want to play facing upward. Use TYPE I (normal) tape only. Close the compartment.
Make sure there is no slack in the tape to avoid damaging the tape or the unit.

2 Press ► 2 on the unit.
The unit starts playing.

To	Press
Pause playback	II 2 on the unit. To resume play, press it again.
Stop playback	■⏏ 2 on the unit.
Fast-forward or rewind*	◄◄ or ►► (rewind or fast forward) 2 on the unit.
Eject the cassette	■⏏ 2 on the unit.

* When the tape is wound to the end, press ■⏏ 2 to release ◄◄ or ►► 2.

Recording on a tape

Use buttons on the unit for the operation.

1 Press ■⏏ 2 on the unit to open the tape compartment and insert a blank tape with the side you want to record on facing upward. Use TYPE I (normal) tape only. Close the compartment.

2 Select the program source you want to record.
To record from the CD player, press ■ 8 on the unit and place a CD.
To record from the radio, tune in the station you want (see "Listening to the radio").

3 Press ● 2 on the unit to start recording (► is depressed automatically).

To	Press
Pause recording	II 2 on the unit. Press the button again to resume recording.
Stop recording	■⏏ 2 on the unit.

Tips
- Adjusting the volume or the audio emphasis will not affect the recording level.
- For the best results, use the AC power as a power source for recording.
- To erase a recording, proceed as follows:
  1 Insert the tape whose recording you want to erase.
  2 Make sure that "TAPE" is displayed. (If "TAPE" is not displayed, press ► 2 on the unit or press FUNCTION 22 on the remote until it appears in the display.)
  3 Press ● 2 on the unit.

CFD-G700CP (2/2)

Other Operations

Using the display

You can check information about the CD using the display.

Checking the information of an audio CD

To check the total track number and playing time of the CD

Press ■ 8 while the CD is stopped, and you can check them in the display.

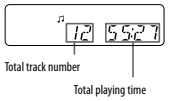

Checking the information of an MP3 disc

To check the total folder number and total file number on the CD

Press ■ 8 while the CD is stopped, and you can check them in the display.

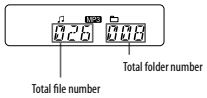

To check file information

Press DSPL/ENT 19 on the unit while playing an MP3 disc. The display changes as follows:

→ The current file number and playing time
↓
The song title (♫)
↓
The artist name (👤)
↓
The album name (🗀)

Playing tracks/MP3 files repeatedly (Repeat Play)

You can play tracks/MP3 files repeatedly in normal, Shuffle or Program play modes.

1 Press ■ 8.
"CD" appears in the display.

2 Proceed as follows.

To repeat	Do this
A single track/MP3 file	1 Press REPEAT 13 until "⟲ 1" appears. 2 Press ⏮ or ⏭ 7 to select the track/MP3 file that you want to repeat. 3 Press ▶II 8 on the unit.
All tracks/MP3 files on the CD	1 Press REPEAT 13 until "⟲" appears. 2 Press ▶II 8 on the unit.
A selected folder (MP3 disc only)	1 Press MODE 14 until "🗀" appears, and then press REPEAT 13 until "⟲" appears. 2 Select the folder by pressing 🗀 + or 🗀 – 6. 3 Press ▶II 8 on the unit.
Tracks/MP3 files in random order	1 Select Shuffle Play (see "Playing tracks/MP3 files in random order"). 2 Press REPEAT 13 until "SHUF" and "⟲" appear. 3 Press ▶II 8 on the unit.
Files in a selected folder in random order (MP3 disc only)	1 Start Folder Shufle Play (see "Playing tracks/MP3 files in random order"). 2 Press REPEAT 13 on the unit until "⟲", "SHUF" and "🗀" appear. 3 Press ▶II 8 on the unit.
Programed tracks/MP3 files	1 Program tracks/MP3 files (see "Creating your own program"). 2 Press REPEAT 13 until "⟲" and "PGM" appear. 3 Press ▶II 8 on the unit.

On the remote

Use ▶ 8 instead of ▶II 8.

To cancel Repeat Play

Press REPEAT 13 until "⟲" disappears from the display.

Playing tracks/MP3 files in random order (Shuffle Play)

You can play tracks/MP3 files in random order. When playing an MP3 disc, you can also play MP3 files in a selected folder in random order (Folder Shuffle Play).

1 Press ■ 8.
"CD" appears in the display.

2 Press MODE 14 until "SHUF" appears in the display.
When you select Folder Shuffle Play (MP3 disc only), press MODE 14 on the unit until "🗀" and "SHUF" appear in the display. Then press 🗀 TUNE + or – 6 on the unit to select a folder you want.

3 Press ▶II 8 on the unit to start Shuffle Play.

On the remote

Use ▶ 8 instead of ▶II 8.

To cancel Shuffle Play

Stop playing first. Then press MODE 14 until "SHUF" disappears from the display.

Tips

- During Shuffle Play, you cannot select the previous track/MP3 file by pressing ⏮ 7.
- The resume function does not work during Shuffle Play.

Creating your own program (Program Play)

You can arrange the playing order of up to 15 tracks/MP3 files on a CD.

1 Press ■ 8.
"CD" appears in the display.

2 Press MODE 14 until "PGM" flashes in the display.

3 Press ⏮ or ⏭ 7 then press DSPL/ENT 19 on the unit (ENTER 25 on the remote) for the tracks/MP3 files you want to program in the order you want.
For MP3 files, press 🗀TUNE + or – 6 first and then press ⏮ or ⏭ 7 and DSPL/ENT 19 (ENTER 25 on the remote).

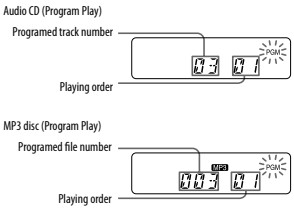

4 Press ▶II 8 on the unit to start Program Play.

On the remote

Use ▶ 8 instead of ▶II 8.

To cancel Program Play

Stop playing first. Then press MODE 14 until "PGM" disappears from the display.

To delete the last track or file of the program

Press CLEAR 23 on the remote while the unit is stopped.

To check the order of tracks/MP3 files before play

Press DSPL/ENT 19 on the unit.
Every time you press the button, the track number and the playing order appear.

To change the current program

Press ■ 8 once if the CD is stopped and twice if the CD is playing. The current program will be erased. Then create a new program following the programing procedure.

Tips

- If you try to program 16 tracks/MP3 files or more, "FULL" will appear in the display.
- You can play the same program again, since the program is saved until you open the CD compartment or turn off the power of the unit.
- You can record your own program. After you have created the program, insert a blank tape and press ● 2 on the unit to start recording.
- The resume function does not work during Program Play.

Presetting radio stations

You can store radio stations into the unit's memory. You can preset up to 30 radio stations, 20 for FM and 10 for AM in any order.

1 Press RADIO/BAND•AUTO PRESET 5 on the unit to select the band.

2 Hold down RADIO/BAND•AUTO PRESET 5 on the unit for 2 seconds until "AUTO" flashes in the display.

3 Press DSPL/ENT 19 on the unit.
The stations are stored in memory from the lower frequencies to the higher ones.

If a station cannot be preset automatically

You need to preset a station with a weak signal manually.

1 Press RADIO/BAND•AUTO PRESET 5 on the unit to select the band.

2 Tune in a station you want.

3 Hold down DSPL/ENT 19 on the unit for 2 seconds until the preset number flashes in the display.

4 Press PRESET + or – 7 on the unit until the preset number you want for the station flashes in the display.

5 Press DSPL/ENT 19 on the unit.
The new station replaces the old one.

On the remote

1 Press RADIO/BAND 5 until the band you want appears in the display.

2 Tune in a station you want.

3 Hold down ENTER 25 for 2 seconds until the preset number flashes in the display.

4 Press PRESET + or – 7 until the preset number you want for the station flashes in the display.

5 Press ENTER 25.

Tip

The preset radio stations remain in memory even if you unplug the AC power cord or remove the batteries.

Playing preset radio stations

1 Press RADIO/BAND•AUTO PRESET 5 on the unit to select the band.

2 Press PRESET + or – 7 on the unit to tune in the stored station.

On the remote

1 Press RADIO/BAND 5.

2 Press PRESET + or – 7 to tune in the stored station.

Falling asleep to music

1 Play the music source you want.

2 Press SLEEP 18 to display "SLEEP".

3 Press SLEEP 18 to select the minutes until the unit goes off automatically.
Each time you press the button, the indication changes as follows:
"AUTO*" → "60MIN" → "30MIN" → "20MIN" → "10MIN" → "OFF".
* When you select "AUTO", the CD or tape stops playing in 90 minutes at most and the unit goes off automatically. When you are listening to the radio, the radio goes off in 90 minutes.
If 4 seconds have passed after you pressed SLEEP 18, the minutes in the display are entered.
When the preset time has passed, the unit goes off automatically.

To cancel the sleep function

Press POWER 1 to turn off the power.

Note

When you are playing a tape using this function:
If the tape length of one side is longer than the set time, the unit will not go off until the tape reaches the end.

Connecting optional component

You can enjoy the sound from an optional component such as a portable digital music player through the speakers of this unit.
Be sure to turn off the power of each component before making any connections.
For details, refer to the instruction manual of the component to be connected.

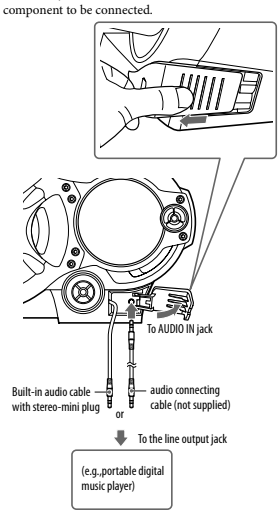

1 Connect the built-in audio cable with stereo-mini plug 12 on the unit to the line output jack of the portable digital music player or other components*.

2 Turn the unit and the connected component on.

3 Press AUDIO IN 14 on the unit and start playing sound on the connected component.
The sound from the connected component is output from the speakers.

* To connect the unit to a TV or VCR, use an extension cable (not supplied) with a stereo-mini jack on one end (for the built-in audio cable) and two phono plugs on the other end.

Recording the sound from the connected component

1 Insert a blank tape.

2 Press AUDIO IN 14 on the unit to display "AUDIO IN".

3 Press ● 2 on the unit.
Recording starts.

4 Play the optional component connected to the unit.

Tip

Should the built-in audio cable 12 become damaged, you can use the AUDIO IN jack 11 to connect an optional component to the unit. Use an audio connecting cable (not supplied) with a stereo mini plug on one end (for the AUDIO IN jack 11). Make sure the plug on the other end is suited to the jack on the optional component; for example, a stereo-mini plug for a portable digital music player, or two phono plugs for a TV or VCR.

Notes

- Do not pull forcibly on the built-in audio cable 12. Doing so may cause the plug to rip off.
- Connect the built-in audio cable 12 or audio connecting cable (not supplied) securely to prevent any malfunction.
- It is not possible to listen to two components connected at the same time through the built-in audio cable 12 and the AUDIO IN jack 11 (using an optional audio connecting cable). Connect one component at a time.

D-LIGHT SYNC OUT jack

Use the D-LIGHT SYNC controller to connect to this D-LIGHT SYNC OUT jack 3. You need to connect the D-LIGHT SYNC controller to the lighting device* (not supplied). The lighting device will react according to control signals transmitted by the D-LIGHT SYNC controller upon receiving music source from the system. For details on the use of D-LIGHT SYNC controller and lighting device, refer to the respective operating instructions supplied with the respective device.

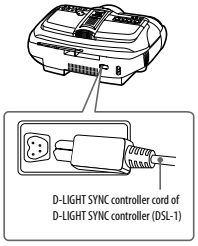

* Refer to the D-LIGHT SYNC controller operating instruction for the recommended lighting device.

Note

The lighting effect may be different depending on the connected lighting device or the type of music being played back.

CFD-G770CP (1/2)

Basic Operations

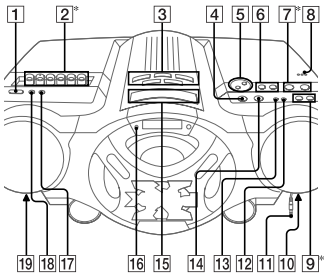

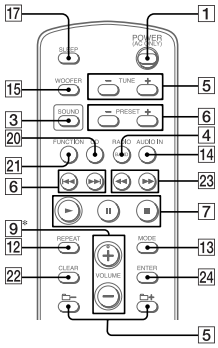

* VOL + (VOLUME + on the remote) 9, ►II 7 and ► 2 (on the unit) have a tactile dot.

Before using the unit

To turn on/off the power
Press POWER 1.

To adjust the volume
Press VOL +, – (VOLUME +, – on the remote) 9.

To listen through headphones
Connect the headphones to the ∩ (headphones) jack 19.

To select the sound characteristic
Press ROCK, DANCE, SALSA, REGGAETON or FLAT 3 to select the kind of audio emphasis that you want. (On the remote, press SOUND 3 repeatedly.)

To reinforce the bass sound
Press POWER DRIVE WOOFER (WOOFER on the remote) 15 to select WOOFER or WOOFER on the display. WOOFER is more effective. When the WOOFER function works, the ring on the front panel lights up.
To return to normal sound, press the button repeatedly until the indication disappears from the display.

Notes
- While the sleeping timer is on, the ring does not light, even if the WOOFER function is used.
- When you use the headphones, the WOOFER function does not work.

Playing a CD/MP3 disc

1 Press ⏏ PUSH OPEN/CLOSE 8 on the unit, and place a disc with the label side up on the CD compartment.
To close the CD compartment, press ⏏ PUSH OPEN/CLOSE 8 on the unit.

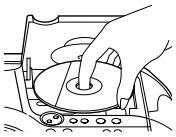

2 Press ►II on the unit (► on the remote) 7.
The unit plays all the tracks/MP3 files once.
When you place MP3 discs, "MP3" appears in the display after the unit reads the file information.

Audio CD

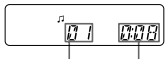

MP3 disc

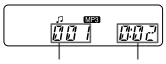

* If the playing time is more than 100 minutes, it appears "--:--" in the display.

To	Press
Pause playback	►II on the unit (II on the remote) 7. To resume play, press it again.
Stop playback	■ 7.
Go to the next track/MP3 file	►►I 6.
Go back to the previous track/MP3 file	I◄◄ 6.
Select a folder on an MP3 disc	🗀 + to go forward and 🗀 – to go backward 5.
Locate a point while listening to the sound	►►I (forward) or I◄◄ (backward) 6 while playing and hold it until you find the point. (◄◄ or ►► 23 on the remote)
Locate a point while observing the display	►►I (forward) or I◄◄ (backward) 6 in pause and hold it until you find the point. (◄◄ or ►► 23 on the remote)
Remove the CD	⏏ PUSH OPEN/CLOSE 8.

Tips
- Playback starts from the track/MP3 file you last stopped playing (Resume play). During stop, the track/MP3 file number to be played is displayed.
- To cancel the resume play (to start play from the beginning of the first track/MP3 file), press ■ 7 while the CD is stopped. When you open the CD compartment or turn off the unit, the resume play is also canceled.

Note
You cannot locate a specific track if "SHUF" or "PGM" is lit in the display.
Press ■ 7, and then press MODE 13 repeatedly until "SHUF" and "PGM" disappear from the display.

Example of folder structure and playing order
The playing order of the folders and files is as follows:

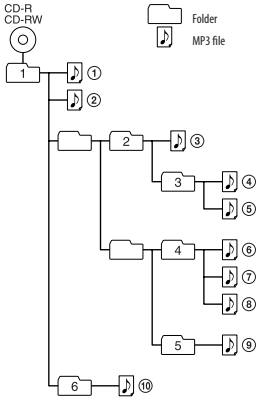

Notes on MP3 discs
- When the disc is inserted, the unit reads all the files on that disc. During this time, "READING" is displayed. If there are many folders or non-MP3 files on the disc, it may take a long time for play to begin or for the next MP3 file to start play.
  We recommend that you do not save unnecessary folders or files other than MP3 ones in the disc to be used for MP3 listening.
- A folder that does not include an MP3 file is skipped.
- Maximum number of files: 255
  Maximum number of folders: 150 (including the root folder)
  Maximum number of folders and files in total: 256
  Maximum directory levels: 8
- Folder names and file names can be displayed with up to 30 characters including quotation marks.
- The characters A - Z, 0 - 9, and _ can be displayed on this unit. Other characters are displayed as "_".
- This unit conforms to Version 1.0, 1.1, 2.2, 2.3 and 2.4 of the ID3 tag format. When the file has the ID3 tag information, "song title", "artist name" and "album name" can be displayed. If the file does not have the ID3 tag information, "NO TITLE" appears instead of song title, "NO ARTIST" appears instead of artist name and "NO ALBUM" appears instead of album name. The ID3 tag information can be displayed with up to 15 characters.
- When naming, be sure to add the file extension "mp3" to the file name.
- If you put the extension "mp3" to a file other than an MP3 file, the unit cannot recognize the file properly and will generate random noise that could damage your speakers.
- The file name does not correspond to the ID3 tag.

Listening to the radio

1 Press RADIO/BAND•AUTO PRESET 4 on the unit (RADIO/BAND 4 on the remote) repeatedly.
Each time you press the button, the indication changes as follows:
"FM" → "AM"

2 Hold down 🗀 TUNE + or – 5 until the frequency digits begin to change in the display.
The unit automatically scans the radio frequencies and stops when it finds a clear station.
If you cannot tune in a station, press 🗀 TUNE + or – 5 repeatedly to change the frequency step by step.
When an FM stereo broadcast is received, "ST" appears.

Tip
If the FM broadcast is noisy, press MODE 13 until "Mono" appears in the display and the radio will play in monaural.

Changing the AM tuning interval
If you need to change the AM tuning interval, do the following:

1 Press RADIO/BAND•AUTO PRESET 4 on the unit until "AM" is displayed.
2 Press DSPL/ENT 18 on the unit for 2 seconds.
3 Press RADIO/BAND•AUTO PRESET 4 on the unit for 2 seconds.
"9K STEP" or "10K STEP" flashes.
4 Press PRESET + or – 6 on the unit to select "9K STEP" for 9 kHz interval or "10K STEP" for 10 kHz interval.
5 Press DSPL/ENT 18 on the unit.

After changing the tuning interval, you need to reset your preset AM radio stations.

Playing a tape

Use buttons on the unit for the operation.

1 Press ■⏏ 2 on the unit, and insert the tape into the tape compartment with the side you want to play facing upward. Use TYPE I (normal) tape only. Close the compartment.
Make sure there is no slack in the tape to avoid damaging the tape or the unit.

2 Press ► 2 on the unit.
The unit starts playing.

To	Press
Pause playback	II 2 on the unit. To resume play, press it again.
Stop playback	■⏏ 2 on the unit.
Fast-forward or rewind*	◄◄ or ►► (rewind or fast forward) 2 on the unit.
Eject the cassette	■⏏ 2 on the unit.

* When the tape is wound to the end, press ■⏏ 2 to release ◄◄ or ►► 2.

Recording on a tape

Use buttons on the unit for the operation.

1 Press ■⏏ 2 on the unit to open the tape compartment and insert a blank tape with the side you want to record on facing upward. Use TYPE I (normal) tape only. Close the compartment.
2 Select the program source you want to record.
To record from the CD player, press ■ 7 on the unit and place a CD.
To record from the radio, tune in the station you want (see "Listening to the radio").
3 Press ● 2 on the unit to start recording (► is depressed automatically).

To	Press
Pause recording	II 2 on the unit. Press the button again to resume recording.
Stop recording	■⏏ 2 on the unit.

Tips
- Adjusting the volume or the audio emphasis will not affect the recording level.
- For the best results, use the AC power as a power source for recording.
- To erase a recording, proceed as follows:
  1 Insert the tape whose recording you want to erase.
  2 Make sure that "TAPE" is displayed. (If "TAPE" is not displayed, press ► 2 on the unit or press FUNCTION 21 on the remote until it appears in the display.)
  3 Press ● 2 on the unit.

CFD-G770CP (2/2)

Other Operations

Using the display

You can check information about the CD using the display.

Checking the information of an audio CD

To check the total track number and playing time of the CD

Press ■ 7 while the CD is stopped, and you can check them in the display.

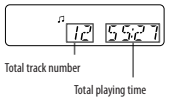

Checking the information of an MP3 disc

To check the total folder number and total file number on the CD

Press ■ 7 while the CD is stopped, and you can check them in the display.

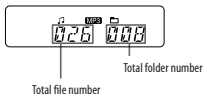

To check file information

Press DSPL/ENT 18 on the unit while playing an MP3 disc. The display changes as follows:

The current file number and playing time
↓
The song title (♫)
↓
The artist name (👤)
↓
The album name (🗀)

Playing tracks/MP3 files repeatedly (Repeat Play)

You can play tracks/MP3 files repeatedly in normal, Shuffle or Program play modes.

1 Press ■ 7.
"CD" appears in the display.

2 Proceed as follows.

To repeat	Do this
A single track/MP3 file	1 Press REPEAT 12 until "⇄ 1" appears. 2 Press ⏮ or ⏭ 6 to select the track/MP3 file that you want to repeat. 3 Press ▶II 7 on the unit.
All tracks/MP3 files on the CD	1 Press REPEAT 12 until "⇄" appears. 2 Press ▶II 7 on the unit.
A selected folder (MP3 disc only)	1 Press MODE 13 until "🗀" appears, and then press REPEAT 12 until "⇄" appears. 2 Select the folder by pressing 🗀 + or 🗀 – 5. 3 Press ▶II 7 on the unit.
Tracks/MP3 files in random order	1 Select Shuffle Play (see "Playing tracks/MP3 files in random order"). 2 Press REPEAT 12 until "SHUF" and "⇄" appear. 3 Press ▶II 7 on the unit.
Files in a selected folder in random order (MP3 disc only)	1 Start Folder Shufle Play (see "Playing tracks/MP3 files in random order"). 2 Press REPEAT 12 on the unit until "⇄", "SHUF" and "🗀" appear. 3 Press ▶II 7 on the unit.
Programed tracks/MP3 files	1 Program tracks/MP3 files (see "Creating your own program"). 2 Press REPEAT 12 until "⇄" and "PGM" appear. 3 Press ▶II 7 on the unit.

On the remote

Use ▶ 7 instead of ▶II 7.

To cancel Repeat Play

Press REPEAT 12 until "⇄" disappears from the display.

Playing tracks/MP3 files in random order (Shuffle Play)

You can play tracks/MP3 files in random order. When playing an MP3 disc, you can also play MP3 files in a selected folder in random order (Folder Shuffle Play).

1 Press ■ 7.
"CD" appears in the display.

2 Press MODE 13 until "SHUF" appears in the display.
When you select Folder Shuffle Play (MP3 disc only), press MODE 13 on the unit until "🗀" and "SHUF" appear in the display. Then press 🗀 TUNE + or – 5 on the unit to select a folder you want.

3 Press ▶II 7 on the unit to start Shuffle Play.

On the remote

Use ▶ 7 instead of ▶II 7.

To cancel Shuffle Play

Stop playing first. Then press MODE 13 until "SHUF" disappears from the display.

Tips

- During Shuffle Play, you cannot select the previous track/MP3 file by pressing ⏮ 6.
- The resume function does not work during Shuffle Play.

Creating your own program (Program Play)

You can arrange the playing order of up to 15 tracks/MP3 files on a CD.

1 Press ■ 7.
"CD" appears in the display.

2 Press MODE 13 until "PGM" flashes in the display.

3 Press ⏮ or ⏭ 6 then press DSPL/ENT 18 on the unit (ENTER 24 on the remote) for the tracks/MP3 files you want to program in the order you want. For MP3 files, press 🗀 TUNE + or – 5 first and then press ⏮ or ⏭ 6 and DSPL/ENT 18 (ENTER 24 on the remote).

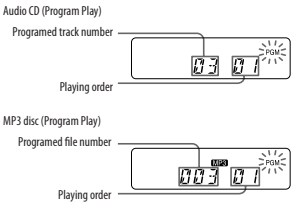

4 Press ▶II 7 on the unit to start Program Play.

On the remote

Use ▶ 7 instead of ▶II 7.

To cancel Program Play

Stop playing first. Then press MODE 13 until "PGM" disappears from the display.

To delete the last track or file of the program

Press CLEAR 22 on the remote while the unit is stopped.

To check the order of tracks/MP3 files before play

Press DSPL/ENT 18 on the unit.
Every time you press the button, the track number and the playing order appear.

To change the current program

Press ■ 7 once if the CD is stopped and twice if the CD is playing. The current program will be erased. Then create a new program following the programing procedure.

Tips

- If you try to program 16 tracks/MP3 files or more, "FULL" will appear in the display.
- You can play the same program again, since the program is saved until you open the CD compartment or turn off the power of the unit.
- You can record your own program. After you have created the program, insert a blank tape and press ● 2 on the unit to start recording.
- The resume function does not work during Program Play.

Presetting radio stations

You can store radio stations into the unit's memory. You can preset up to 30 radio stations, 20 for FM and 10 for AM in any order.

1 Press RADIO/BAND•AUTO PRESET 4 on the unit to select the band.

2 Hold down RADIO/BAND•AUTO PRESET 4 on the unit for 2 seconds until "AUTO" flashes in the display.

3 Press DSPL/ENT 18 on the unit.
The stations are stored in memory from the lower frequencies to the higher ones.

If a station cannot be preset automatically

You need to preset a station with a weak signal manually.

1 Press RADIO/BAND•AUTO PRESET 4 on the unit to select the band.

2 Tune in a station you want.

3 Hold down DSPL/ENT 18 on the unit for 2 seconds until the preset number flashes in the display.

4 Press PRESET + or – 6 on the unit until the preset number you want for the station flashes in the display.

5 Press DSPL/ENT 18 on the unit.
The new station replaces the old one.

On the remote

1 Press RADIO/BAND 4 until the band you want appears in the display.

2 Tune in a station you want.

3 Hold down ENTER 24 for 2 seconds until the preset number flashes in the display.

4 Press PRESET + or – 6 until the preset number you want for the station flashes in the display.

5 Press ENTER 24.

Tip

The preset radio stations remain in memory even if you unplug the AC power cord or remove the batteries.

Playing preset radio stations

1 Press RADIO/BAND•AUTO PRESET 4 on the unit to select the band.

2 Press PRESET + or – 6 on the unit to tune in the stored station.

On the remote

1 Press RADIO/BAND 4.

2 Press PRESET + or – 6 to tune in the stored station.

Falling asleep to music

1 Play the music source you want.

2 Press SLEEP 17 to display "SLEEP".

3 Press SLEEP 17 to select the minutes until the unit goes off automatically.
Each time you press the button, the indication changes as follows:
"AUTO*" → "60MIN" → "30MIN" → "20MIN" → "10MIN" → "OFF".
* When you select "AUTO", the CD or tape stops playing in 90 minutes at most and the unit goes off automatically. When you are listening to the radio, the radio goes off in 90 minutes.
If 4 seconds have passed after you pressed SLEEP 17, the minutes in the display are entered.
When the preset time has passed, the unit goes off automatically.

To cancel the sleep function

Press POWER 1 to turn off the power.

Note

When you are playing a tape using this function:
If the tape length of one side is longer than the set time, the unit will not go off until the tape reaches the end.

Connecting optional component

You can enjoy the sound from an optional component such as a portable digital music player through the speakers of this unit.
Be sure to turn off the power of each component before making any connections.
For details, refer to the instruction manual of the component to be connected.

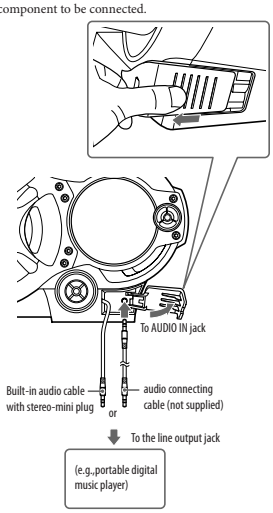

1 Connect the built-in audio cable with stereo-mini plug 11 on the unit to the line output jack of the portable digital music player or other components*.

2 Turn the unit and the connected component on.

3 Press AUDIO IN 14 on the unit and start playing sound on the connected component.
The sound from the connected component is output from the speakers.

* To connect the unit to a TV or VCR, use an extension cable (not supplied) with a stereo-mini jack on one end (for the built-in audio cable) and two phono plugs on the other end.

Recording the sound from the connected component

1 Insert a blank tape.

2 Press AUDIO IN 14 on the unit to display "AUDIO IN".

3 Press ● 2 on the unit.
Recording starts.

4 Play the optional component connected to the unit.

Tip

Should the built-in audio cable 11 become damaged, you can use the AUDIO IN jack 10 to connect an optional component to the unit. Use an audio connecting cable (not supplied) with a stereo mini plug on one end (for the AUDIO IN jack 10). Make sure the plug on the other end is suited to the jack on the optional component; for example, a stereo-mini plug for a portable digital music player, or two phono plugs for a TV or VCR.

Notes

- Do not pull forcibly on the built-in audio cable 11. Doing so may cause the plug to rip off.
- Connect the built-in audio cable 11 or audio connecting cable (not supplied) securely to prevent any malfunction.
- It is not possible to listen to two components connected at the same time through the built-in audio cable 11 and the AUDIO IN jack 10 (using an optional audio connecting cable). Connect one component at a time.

CFD-G770CPK (1/2)

Basic Operations

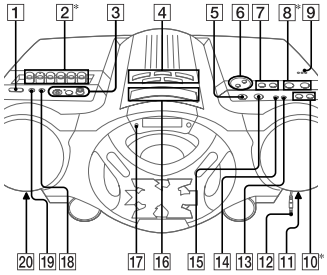

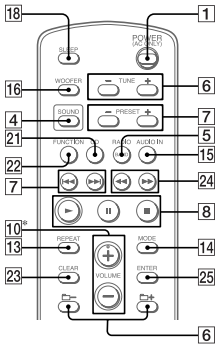

* VOL + (VOLUME + on the remote) 10, ►II 8 and ► 2 (on the unit) have a tactile dot.

Before using the unit

To turn on/off the power
Press POWER 1.

To adjust the volume
Press VOL +, – (VOLUME +, – on the remote) 10.

To listen through headphones
Connect the headphones to the ∩ (headphones) jack 20.

To select the sound characteristic
Press ROCK, DANCE, SALSA, REGGAETON or FLAT 4 to select the kind of audio emphasis that you want. (On the remote, press SOUND 4 repeatedly.)

To reinforce the bass sound
Press POWER DRIVE WOOFER (WOOFER on the remote) 16 to select WOOFER or WOOFER on the display. WOOFER is more effective. When the WOOFER function works, the ring on the front panel lights up.
To return to normal sound, press the button repeatedly until the indication disappears from the display.

Notes
- While the sleeping timer is on, the ring does not light, even if the WOOFER function is used.
- When you use the headphones, the WOOFER function does not work.

Playing a CD/MP3 disc

1 Press ⏏ PUSH OPEN/CLOSE 9 on the unit, and place a disc with the label side up on the CD compartment.
To close the CD compartment, press ⏏ PUSH OPEN/CLOSE 9 on the unit.

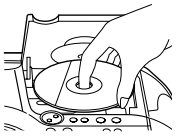

2 Press ►II on the unit (► on the remote) 8.
The unit plays all the tracks/MP3 files once.
When you place MP3 discs, "MP3" appears in the display after the unit reads the file information.

Audio CD

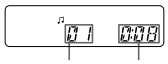

MP3 disc

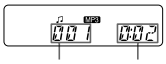

* If the playing time is more than 100 minutes, it appears "--:--" in the display.

To	Press
Pause playback	►II on the unit (II on the remote) 8. To resume play, press it again.
Stop playback	■ 8.
Go to the next track/MP3 file	►►I 7.
Go back to the previous track/MP3 file	I◄◄ 7.
Select a folder on an MP3 disc	🗀 + to go forward and 🗀 – to go backward 6.
Locate a point while listening to the sound	►►I (forward) or I◄◄ (backward) 7 while playing and hold it until you find the point. (◄◄ or ►► 24 on the remote)
Locate a point while observing the display	►►I (forward) or I◄◄ (backward) 7 in pause and hold it until you find the point. (◄◄ or ►► 24 on the remote)
Remove the CD	⏏ PUSH OPEN/CLOSE 9.

Tips
- Playback starts from the track/MP3 file you last stopped playing (Resume play). During stop, the track/MP3 file number to be played is displayed.
- To cancel the resume play (to start play from the beginning of the first track/MP3 file), press ■ 8 while the CD is stopped. When you open the CD compartment or turn off the unit, the resume play is also canceled.

Note
You cannot locate a specific track if "SHUF" or "PGM" is lit in the display.
Press ■ 8, and then press MODE 14 repeatedly until "SHUF" and "PGM" disappear from the display.

Example of folder structure and playing order
The playing order of the folders and files is as follows:

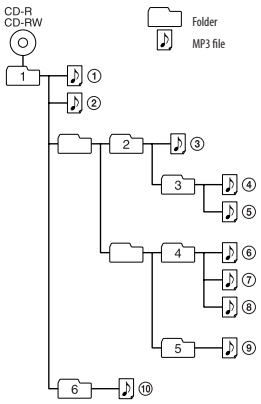

Notes on MP3 discs
- When the disc is inserted, the unit reads all the files on that disc. During this time, "READING" is displayed. If there are many folders or non-MP3 files on the disc, it may take a long time for play to begin or for the next MP3 file to start play.
  We recommend that you do not save unnecessary folders or files other than MP3 ones in the disc to be used for MP3 listening.
- A folder that does not include an MP3 file is skipped.
- Maximum number of files: 255
  Maximum number of folders: 150 (including the root folder)
  Maximum number of folders and files in total: 256
  Maximum directory levels: 8
- Folder names and file names can be displayed with up to 30 characters including quotation marks.
- The characters A - Z, 0 - 9, and _ can be displayed on this unit. Other characters are displayed as "_".
- This unit conforms to Version 1.0, 1.1, 2.2, 2.3 and 2.4 of the ID3 tag format. When the file has the ID3 tag information, "song title", "artist name" and "album name" can be displayed. If the file does not have the ID3 tag information, "NO TITLE" appears instead of song title, "NO ARTIST" appears instead of artist name and "NO ALBUM" appears instead of album name. The ID3 tag information can be displayed with up to 15 characters.
- When naming, be sure to add the file extension "mp3" to the file name.
- If you put the extension "mp3" to a file other than an MP3 file, the unit cannot recognize the file properly and will generate random noise that could damage your speakers.
- The file name does not correspond to the ID3 tag.

Listening to the radio

1 Press RADIO/BAND•AUTO PRESET 5 on the unit (RADIO/BAND 5 on the remote) repeatedly.
Each time you press the button, the indication changes as follows:
"FM" → "AM"

2 Hold down 🗀TUNE + or – 6 until the frequency digits begin to change in the display.
The unit automatically scans the radio frequencies and stops when it finds a clear station.
If you cannot tune in a station, press 🗀TUNE + or – 6 repeatedly to change the frequency step by step.
When an FM stereo broadcast is received, "ST" appears.

Tip
If the FM broadcast is noisy, press MODE 14 until "Mono" appears in the display and the radio will play in monaural.

Playing a tape

Use buttons on the unit for the operation.

1 Press ■⏏ 2 on the unit, and insert the tape into the tape compartment with the side you want to play facing upward. Use TYPE I (normal) tape only. Close the compartment.
Make sure there is no slack in the tape to avoid damaging the tape or the unit.

2 Press ► 2 on the unit.
The unit starts playing.

To	Press
Pause playback	II 2 on the unit. To resume play, press it again.
Stop playback	■⏏ 2 on the unit.
Fast-forward or rewind*	◄◄ or ►► (rewind or fast forward) 2 on the unit.
Eject the cassette	■⏏ 2 on the unit.

* When the tape is wound to the end, press ■⏏ 2 to release ◄◄ or ►► 2.

Recording on a tape

Use buttons on the unit for the operation.

1 Press ■⏏ 2 on the unit to open the tape compartment and insert a blank tape with the side you want to record on facing upward. Use TYPE I (normal) tape only. Close the compartment.

2 Select the program source you want to record.
To record from the CD player, press ■ 8 on the unit and place a CD.
To record from the radio, tune in the station you want (see "Listening to the radio").

3 Press ● 2 on the unit to start recording (► is depressed automatically).

To	Press
Pause recording	II 2 on the unit. Press the button again to resume recording.
Stop recording	■⏏ 2 on the unit.

Tips
- Adjusting the volume or the audio emphasis will not affect the recording level.
- For the best results, use the AC power as a power source for recording.
- To erase a recording, proceed as follows:
  1 Insert the tape whose recording you want to erase.
  2 Make sure that "TAPE" is displayed. (If "TAPE" is not displayed, press ► 2 on the unit or press FUNCTION 22 on the remote until it appears in the display.)
  3 Press ● 2 on the unit.

CFD-G770CPK (2/2)

Other Operations

Using the display

You can check information about the CD using the display.

Checking the information of an audio CD

To check the total track number and playing time of the CD

Press ■ 8 while the CD is stopped, and you can check them in the display.

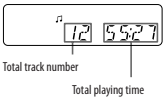

Checking the information of an MP3 disc

To check the total folder number and total file number on the CD

Press ■ 8 while the CD is stoped, and you can check them in the display.

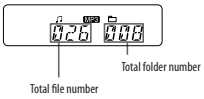

To check file information

Press DSPL/ENT 19 on the unit while playing an MP3 disc. The display changes as follows:

The current file number and playing time
↓
The song title (♫)
↓
The artist name (👤)
↓
The album name (🗀)

Playing tracks/MP3 files repeatedly (Repeat Play)

You can play tracks/MP3 files repeatedly in normal, Shuffle or Program play modes.

1 Press ■ 8.
"CD" appears in the display.

2 Proceed as follows.

To repeat	Do this
A single track/MP3 file	1 Press REPEAT 13 until "⟲ 1" appears. 2 Press ⏮ or ⏭ 7 to select the track/MP3 file that you want to repeat. 3 Press ▶II 8 on the unit.
All tracks/MP3 files on the CD	1 Press REPEAT 13 until "⟲" appears. 2 Press ▶II 8 on the unit.
A selected folder (MP3 disc only)	1 Press MODE 14 until "🗀" appears, and then press REPEAT 13 until "⟲" appears. 2 Select the folder by pressing 🗀 + or 🗀 – 6. 3 Press ▶II 8 on the unit.
Tracks/MP3 files in random order	1 Select Shuffle Play (see "Playing tracks/MP3 files in random order"). 2 Press REPEAT 13 until "SHUF" and "⟲" appear. 3 Press ▶II 8 on the unit.
Files in a selected folder in random order (MP3 disc only)	1 Start Folder Shufle Play (see "Playing tracks/MP3 files in random order"). 2 Press REPEAT 13 on the unit until "⟲", "SHUF" and "🗀" appear. 3 Press ▶II 8 on the unit.
Programed tracks/MP3 files	1 Program tracks/MP3 files (see "Creating your own program"). 2 Press REPEAT 13 until "⟲" and "PGM" appear. 3 Press ▶II 8 on the unit.

On the remote

Use ▶ 8 instead of ▶II 8.

To cancel Repeat Play

Press REPEAT 13 until "⟲" disappears from the display.

Playing tracks/MP3 files in random order (Shuffle Play)

You can play tracks/MP3 files in random order. When playing an MP3 disc, you can also play MP3 files in a selected folder in random order (Folder Shuffle Play).

1 Press ■ 8.
"CD" appears in the display.

2 Press MODE 14 until "SHUF" appears in the display.
When you select Folder Shuffle Play (MP3 disc only), press MODE 14 on the unit until "🗀" and "SHUF" appear in the display. Then press 🗀 TUNE + or – 6 on the unit to select a folder you want.

3 Press ▶II 8 on the unit to start Shuffle Play.

On the remote

Use ▶ 8 instead of ▶II 8.

To cancel Shuffle Play

Stop playing first. Then press MODE 14 until "SHUF" disappears from the display.

Tips

- During Shuffle Play, you cannot select the previous track/MP3 file by pressing ⏮ 7.
- The resume function does not work during Shuffle Play.

Creating your own program (Program Play)

You can arrange the playing order of up to 15 tracks/MP3 files on a CD.

1 Press ■ 8.
"CD" appears in the display.

2 Press MODE 14 until "PGM" flashes in the display.

3 Press ⏮ or ⏭ 7 then press DSPL/ENT 19 on the unit (ENTER 25 on the remote) for the tracks/MP3 files you want to program in the order you want.
For MP3 files, press 🗀 TUNE + or – 6 first and then press ⏮ or ⏭ 7 and DSPL/ENT 19 (ENTER 25 on the remote).

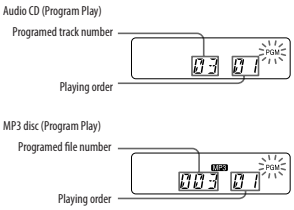

4 Press ▶II 8 on the unit to start Program Play.

On the remote

Use ▶ 8 instead of ▶II 8.

To cancel Program Play

Stop playing first. Then press MODE 14 until "PGM" disappears from the display.

To delete the last track or file of the program

Press CLEAR 23 on the remote while the unit is stopped.

To check the order of tracks/MP3 files before play

Press DSPL/ENT 19 on the unit.
Every time you press the button, the track number and the playing order appear.

To change the current program

Press ■ 8 once if the CD is stopped and twice if the CD is playing. The current program will be erased. Then create a new program following the programing procedure.

Tips

- If you try to program 16 tracks/MP3 files or more, "FULL" will appear in the display.
- You can play the same program again, since the program is saved until you open the CD compartment or turn off the power of the unit.
- You can record your own program. After you have created the program, insert a blank tape and press ● 2 on the unit to start recording.
- The resume function does not work during Program Play.

Presetting radio stations

You can store radio stations into the unit's memory. You can preset up to 30 radio stations, 20 for FM and 10 for AM in any order.

1 Press RADIO/BAND•AUTO PRESET 5 on the unit to select the band.

2 Hold down RADIO/BAND•AUTO PRESET 5 on the unit for 2 seconds until "AUTO" flashes in the display.

3 Press DSPL/ENT 19 on the unit.
The stations are stored in memory from the lower frequencies to the higher ones.

If a station cannot be preset automatically

You need to preset a station with a weak signal manually.

1 Press RADIO/BAND•AUTO PRESET 5 on the unit to select the band.

2 Tune in a station you want.

3 Hold down DSPL/ENT 19 on the unit for 2 seconds until the preset number flashes in the display.

4 Press PRESET + or – 7 on the unit until the preset number you want for the station flashes in the display.

5 Press DSPL/ENT 19 on the unit.
The new station replaces the old one.

On the remote

1 Press RADIO/BAND 5 until the band you want appears in the display.

2 Tune in a station you want.

3 Hold down ENTER 25 for 2 seconds until the preset number flashes in the display.

4 Press PRESET + or – 7 until the preset number you want for the station flashes in the display.

5 Press ENTER 25.

Tip

The preset radio stations remain in memory even if you unplug the AC power cord or remove the batteries.

Playing preset radio stations

1 Press RADIO/BAND•AUTO PRESET 5 on the unit to select the band.

2 Press PRESET + or – 7 on the unit to tune in the stored station.

On the remote

1 Press RADIO/BAND 5.

2 Press PRESET + or – 7 to tune in the stored station.

Falling asleep to music

1 Play the music source you want.

2 Press SLEEP 18 to display "SLEEP".

3 Press SLEEP 18 to select the minutes until the unit goes off automatically.
Each time you press the button, the indication changes as follows:
"AUTO*" → "60MIN" → "30MIN" → "20MIN" → "10MIN" → "OFF".
* When you select "AUTO", the CD or tape stops playing in 90 minutes at most and the unit goes off automatically. When you are listening to the radio, the radio goes off in 90 minutes.
If 4 seconds have passed after you pressed SLEEP 18, the minutes in the display are entered.
When the preset time has passed, the unit goes off automatically.

To cancel the sleep function

Press POWER 1 to turn off the power.

Note

When you are playing a tape using this function:
If the tape length of one side is longer than the set time, the unit will not go off until the tape reaches the end.

Using the Karaoke function (KARAOKE PON)

This function reduces the vocal component of the sound source so that you can enjoy Karaoke with your CDs, Tapes, radio programs, or AUDIO IN (the connected component).
Use buttons on the unit for the operation.

1 Connect a microphone (not supplied) to the MIC MIX 3 jack on the unit.
If the microphone has a power switch, set the switch to ON.

2 Press POWER 1 to turn on the unit.

3 Press KARAOKE PON 3 on the unit.
The indicator beside the KARAOKE PON button 3 lights up.

4 Play the sound source.

5 Turn MIC LEVEL 3 on the unit to adjust the microphone volume.

To cancel the Karaoke function

Press KARAOKE PON 3.

Notes

- Microphones with a built-in echo function can cause a howling sound. Keep the volume of the microphone low with the MIC LEVEL control 3.
- When the howling occurs, turn the head of the microphone away from the speakers.
- When recording from CDs, radio programs, or AUDIO IN (the connected component) with the Karaoke function is on, only the original sound (with the vocal component) will be recorded on the tape.
- Input from a microphone connected to the MIC MIX 3 jack cannot be recorded.
- Even when the Karaoke function is on, the vocal component may not be reduced or adequately reduced for some sound sources.

Connecting optional component

You can enjoy the sound from an optional component such as a portable digital music player through the speakers of this unit.
Be sure to turn off the power of each component before making any connections.
For details, refer to the instruction manual of the component to be connected.

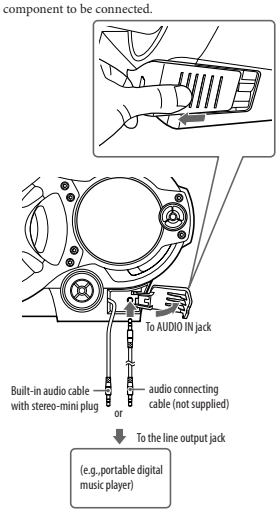

1 Connect the built-in audio cable with stereo-mini plug 12 on the unit to the line output jack of the portable digital music player or other components*.

2 Turn the unit and the connected component on.

3 Press AUDIO IN 15 on the unit and start playing sound on the connected component.
The sound from the connected component is output from the speakers.

* To connect the unit to a TV or VCR, use an extension cable (not supplied) with a stereo-mini jack on one end (for the built-in audio cable) and two phono plugs on the other end.

Recording the sound from the connected component

1 Insert a blank tape.

2 Press AUDIO IN 15 on the unit to display "AUDIO IN".

3 Press ● 2 on the unit.
Recording starts.

4 Play the optional component connected to the unit.

Tip

Should the built-in audio cable 12 become damaged, you can use the AUDIO IN jack 11 to connect an optional component to the unit. Use an audio connecting cable (not supplied) with a stereo mini plug on one end (for the AUDIO IN jack 11). Make sure the plug on the other end is suited to the jack on the optional component; for example, a stereo-mini plug for a portable digital music player, or two phono plugs for a TV or VCR.

Notes

- Do not pull forcibly on the built-in audio cable 12. Doing so may cause the plug to rip off.
- Connect the built-in audio cable 12 or audio connecting cable (not supplied) securely to prevent any malfunction.
- It is not possible to listen to two components connected at the same time through the built-in audio cable 12 and the AUDIO IN jack 11 (using an optional audio connecting cable). Connect one component at a time.

SECTION 3
DISASSEMBLY

3-1. DISASSEMBLY FLOW

- This set can be disassembled in the order shown below.

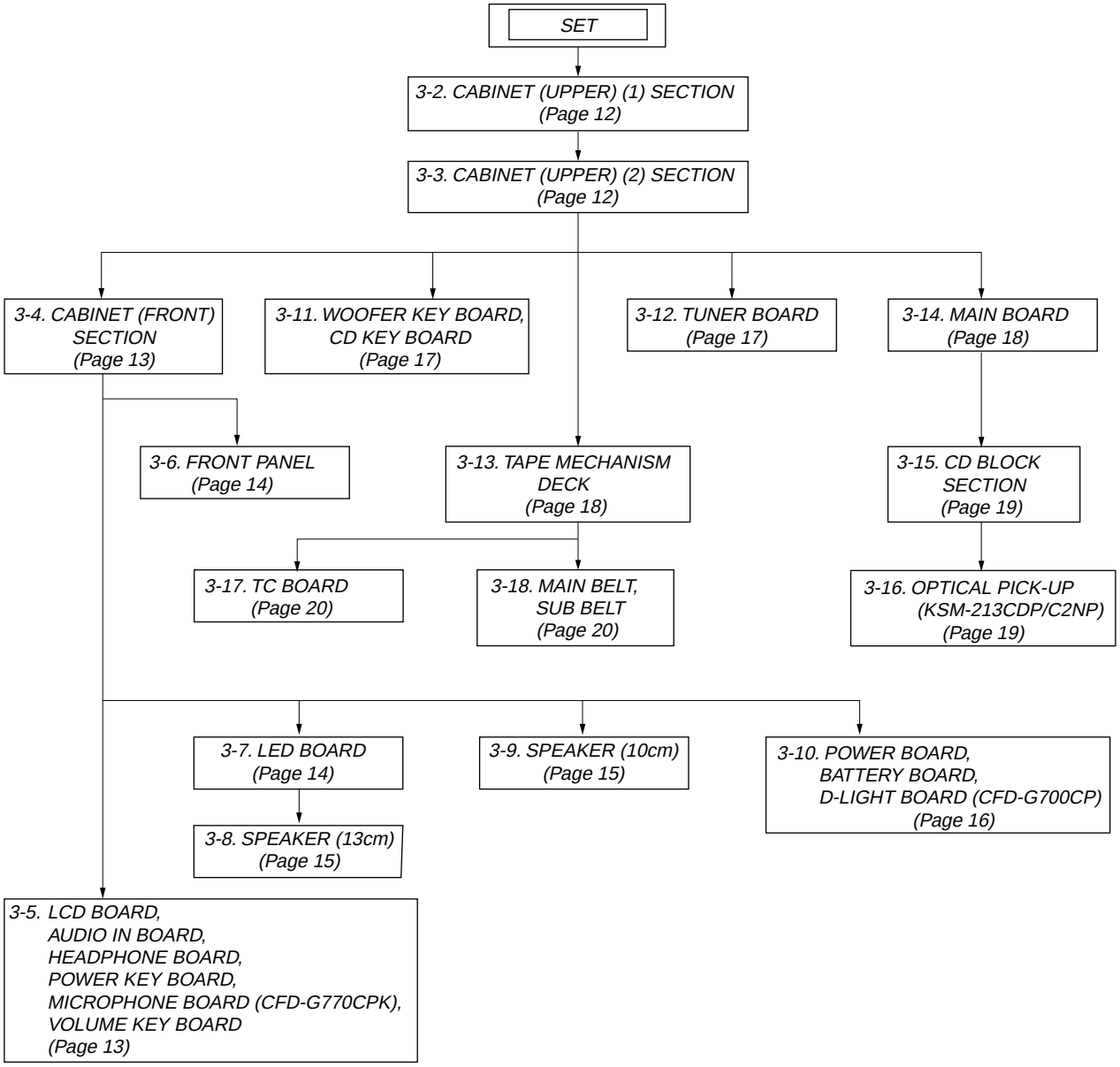

Note: Follow the disassembly procedure in the numerical order given.

3-2. CABINET (UPPER) (1) SECTION

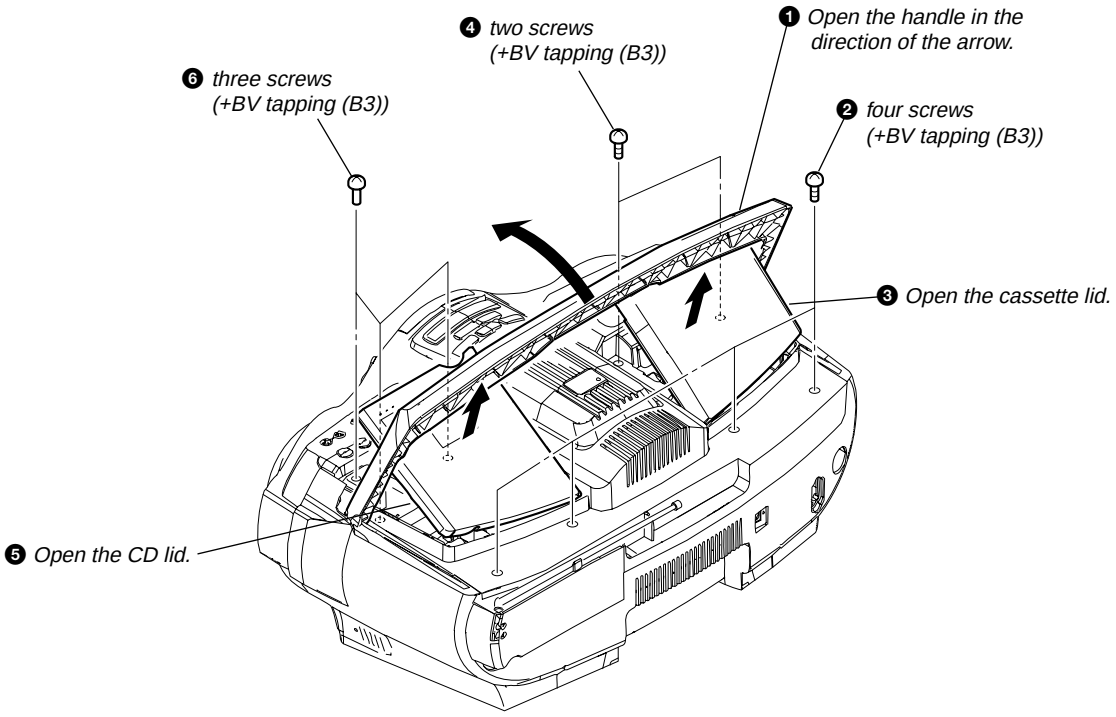

3-3. CABINET (UPPER) (2) SECTION

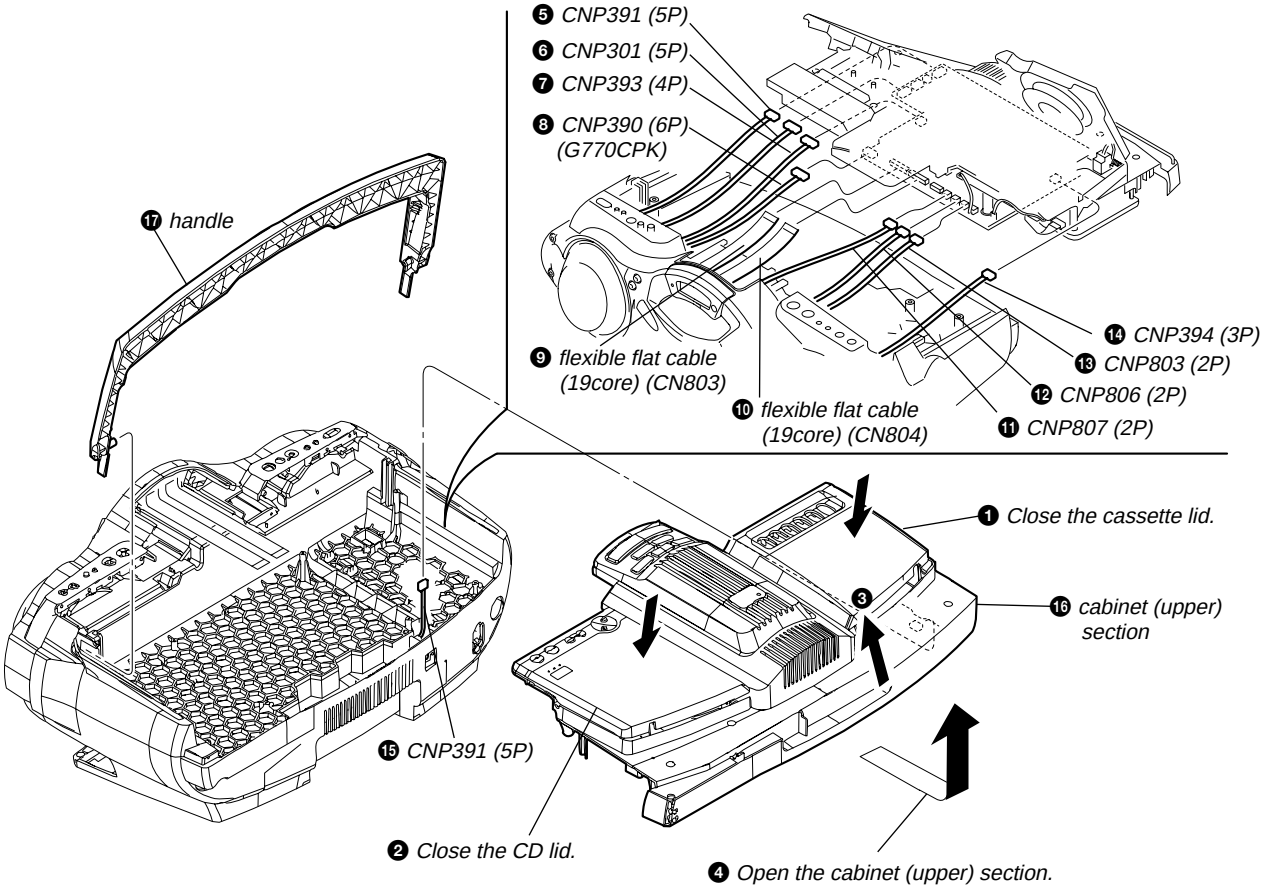

3-4. CABINET (FRONT) SECTION

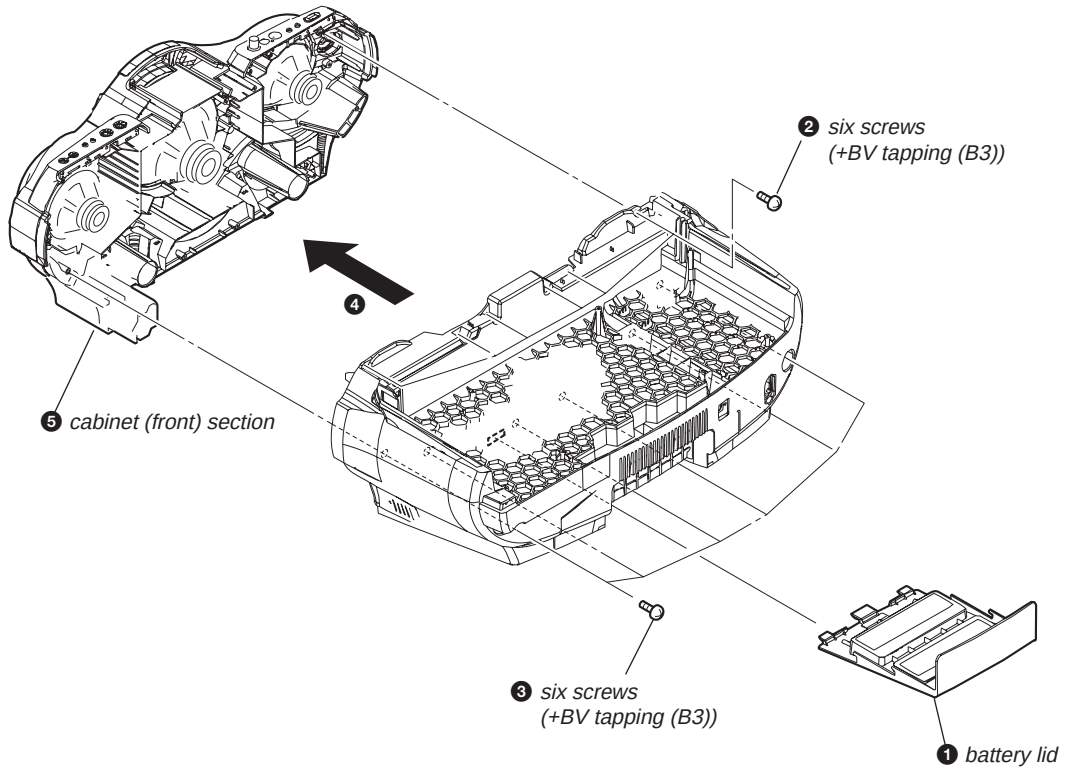

3-5. LCD BOARD, AUDIO IN BOARD, HEADPHONE BOARD, POWER KEY BOARD, MICROPHONE BOARD (CFD-G770CPK), VOLUME KEY BOARD

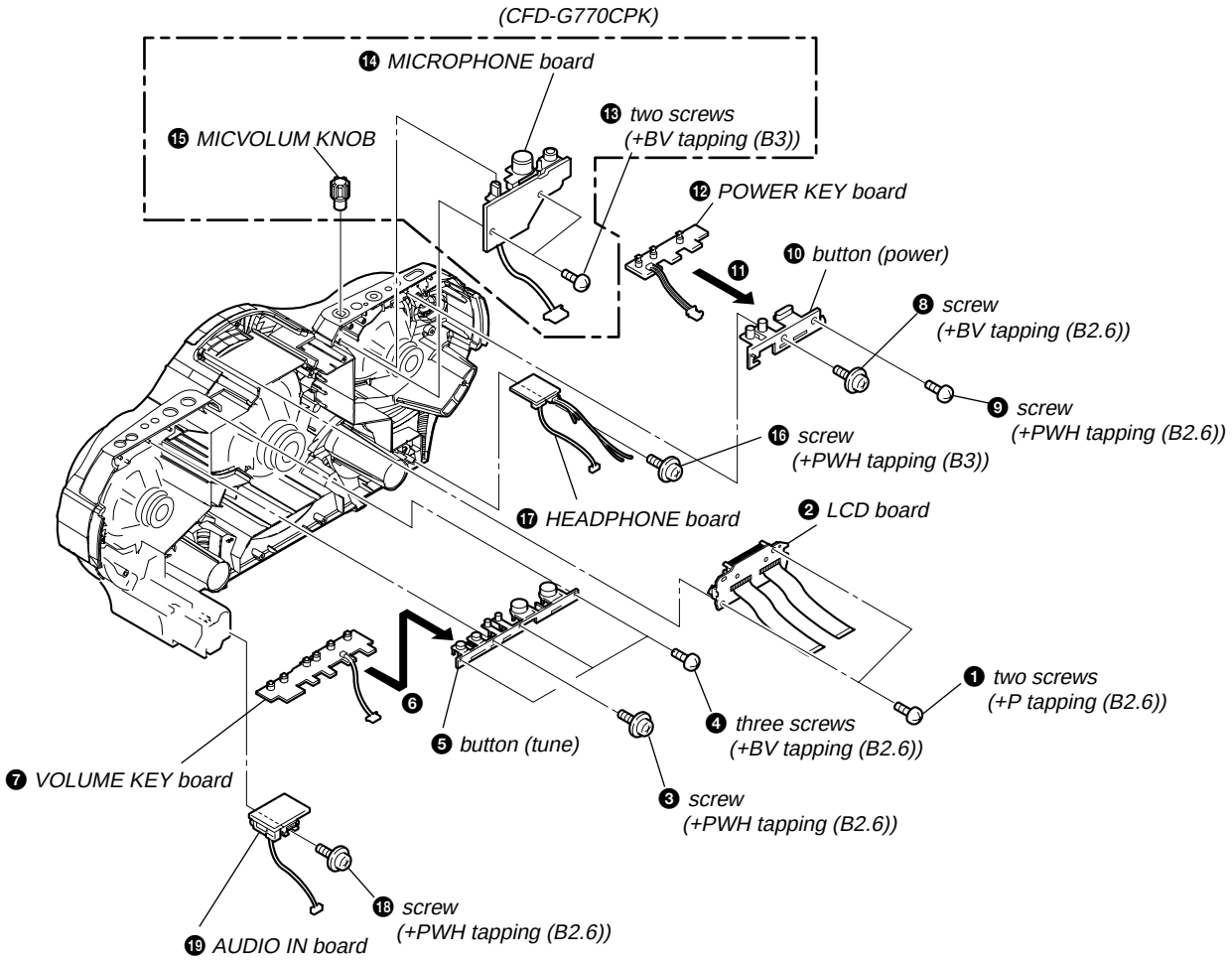

3-6. FRONT PANEL

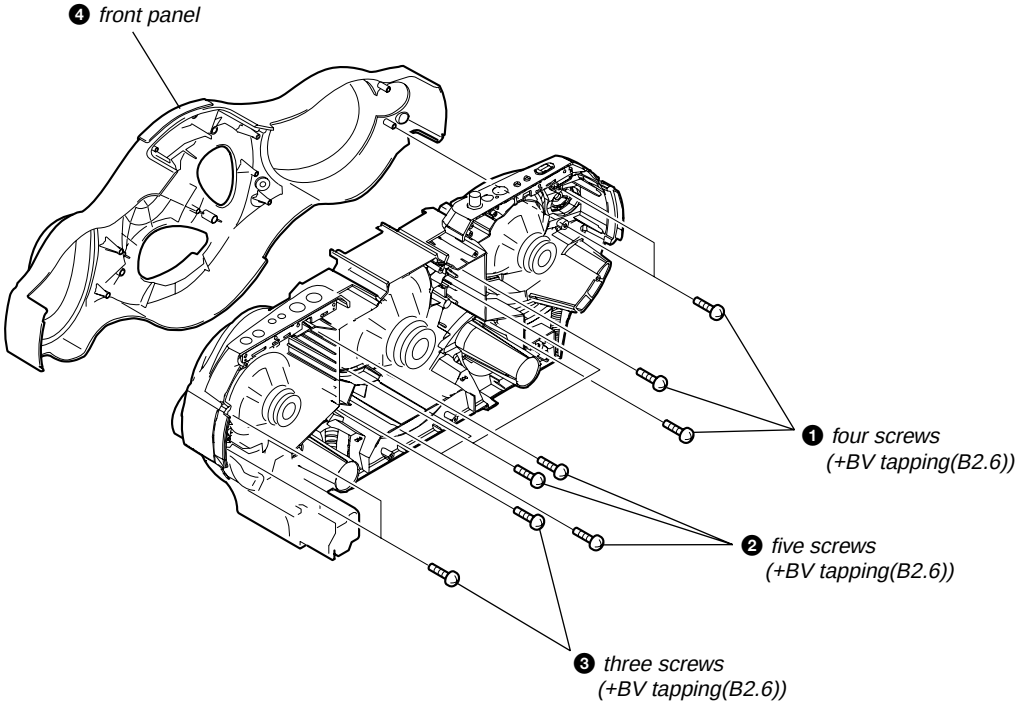

3-7. LED BOARD

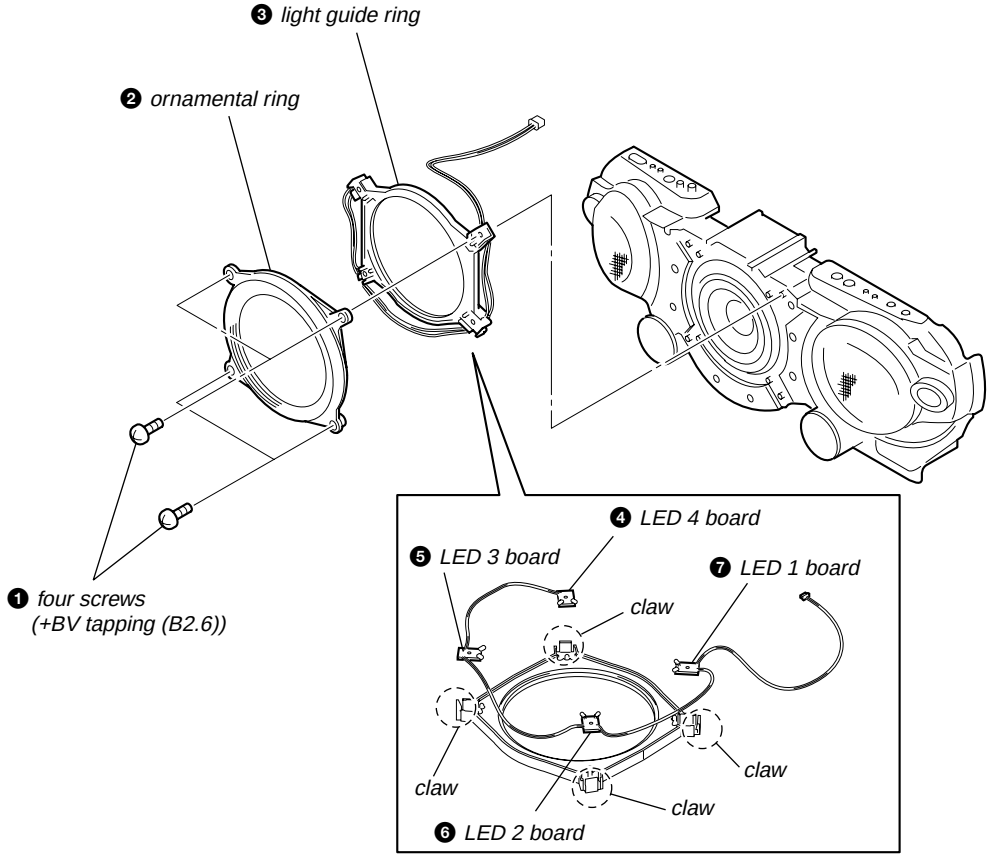

3-8. SPEAKER (13cm)

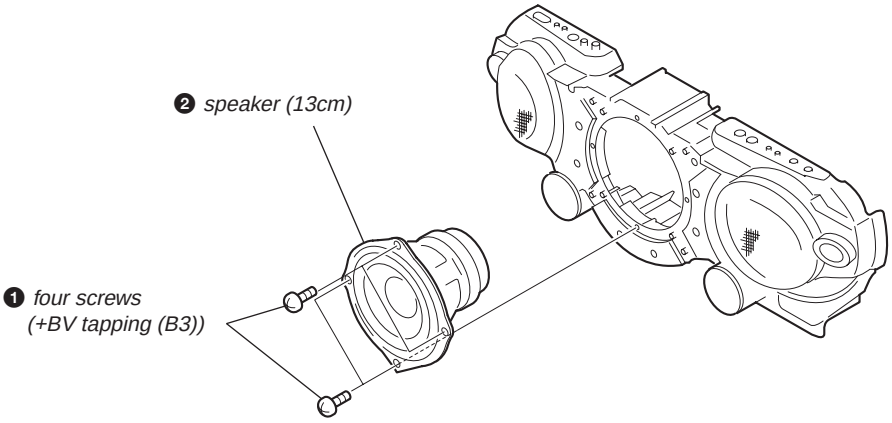

3-9. SPEAKER (10cm)

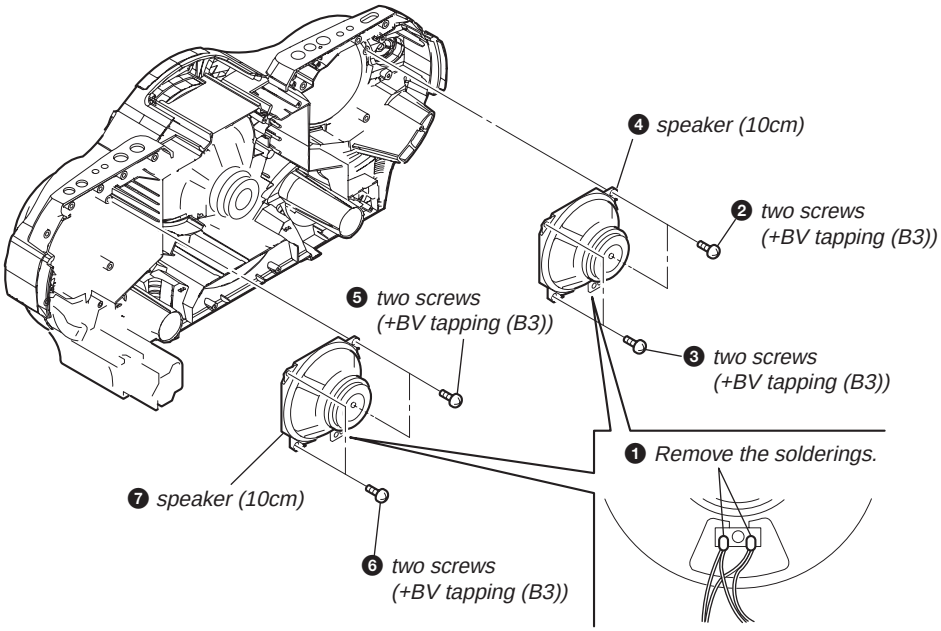

3-10. POWER BOARD, BATTERY BOARD, D-LIGHT BOARD (CFD-G700CP)

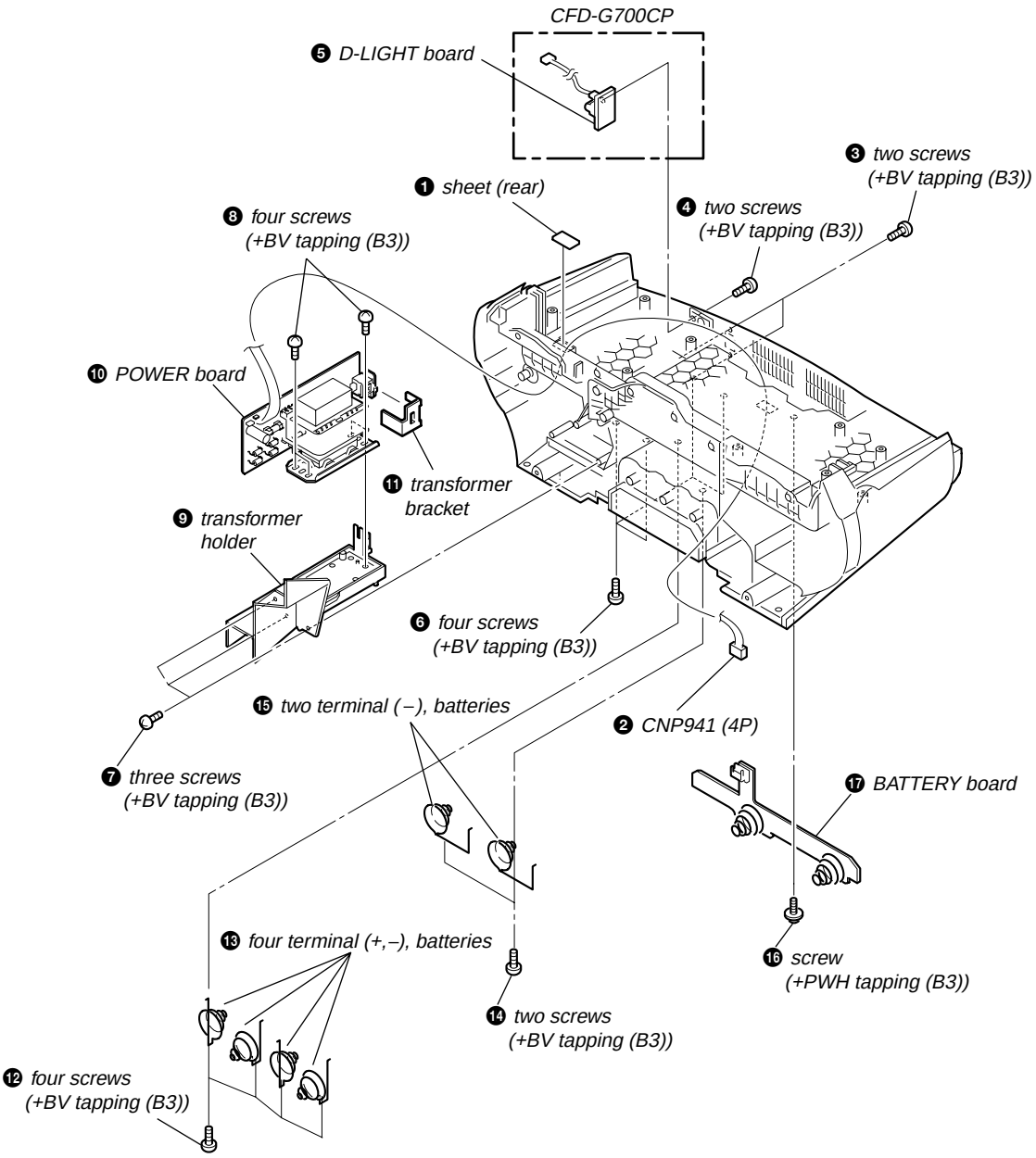

3-11. WOOFER KEY BOARD, CD KEY BOARD

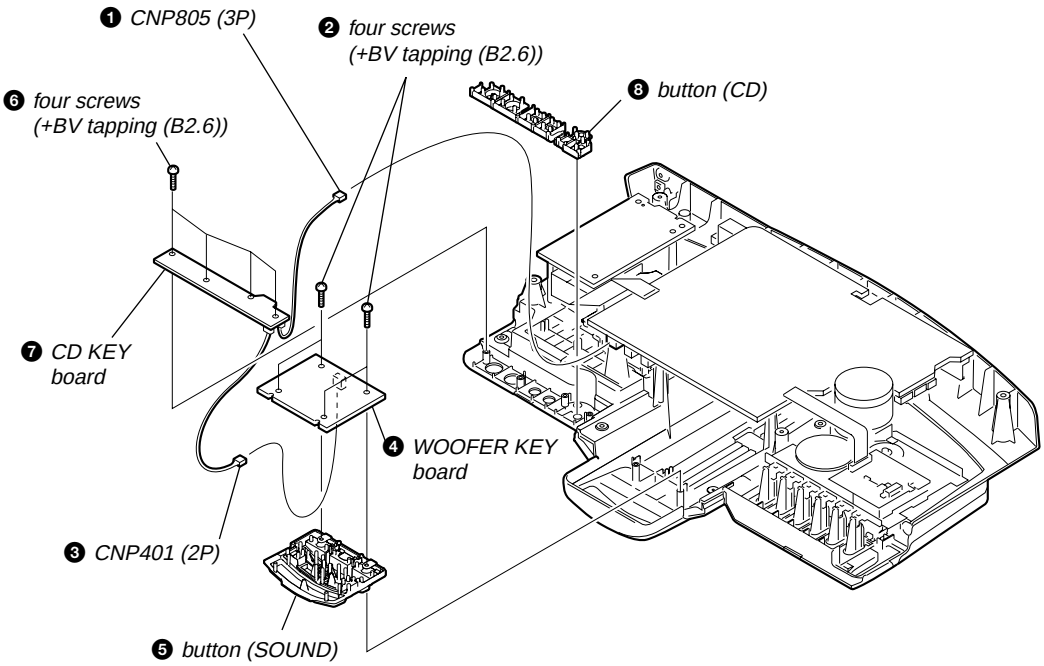

3-12. TUNER BOARD

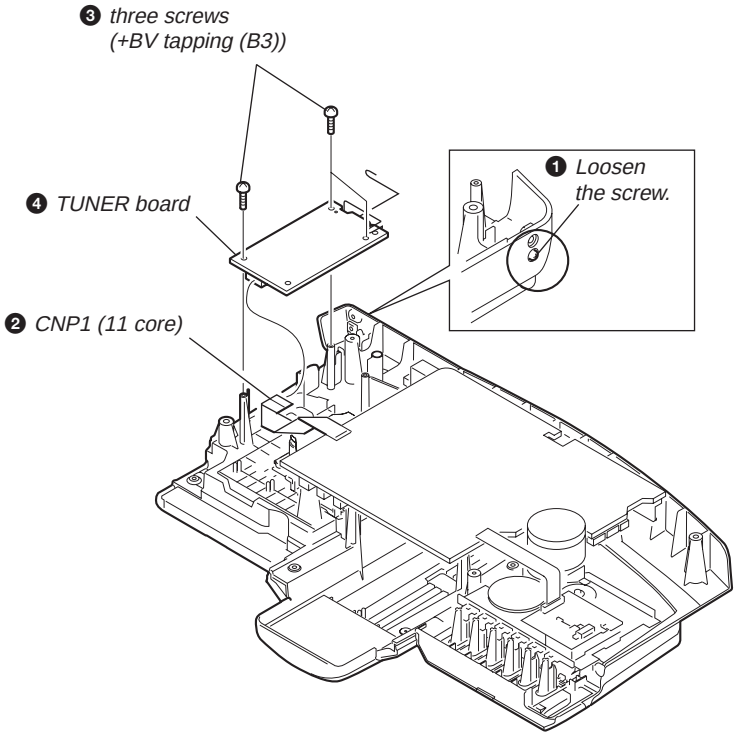

3-13. TAPE MECHANISM DECK

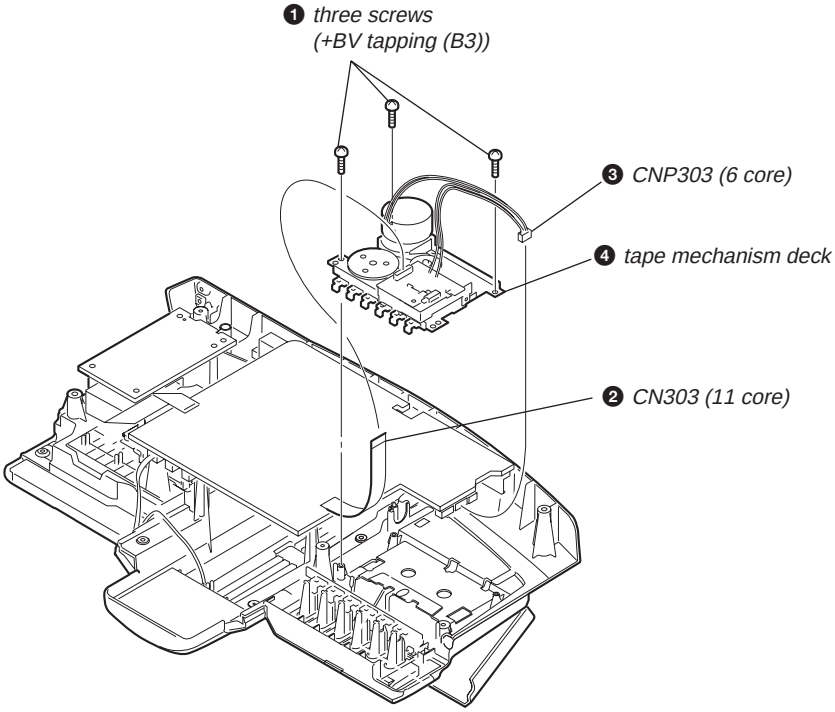

3-14. MAIN BOARD

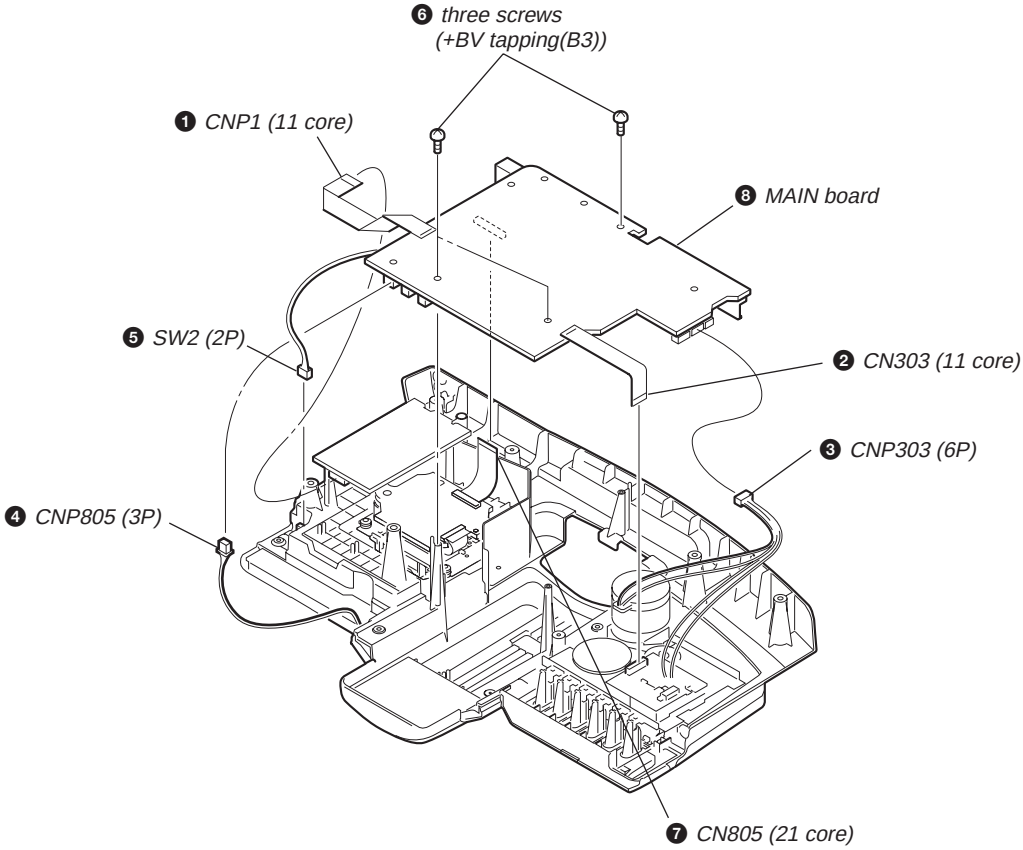

3-15. CD BLOCK SECTION

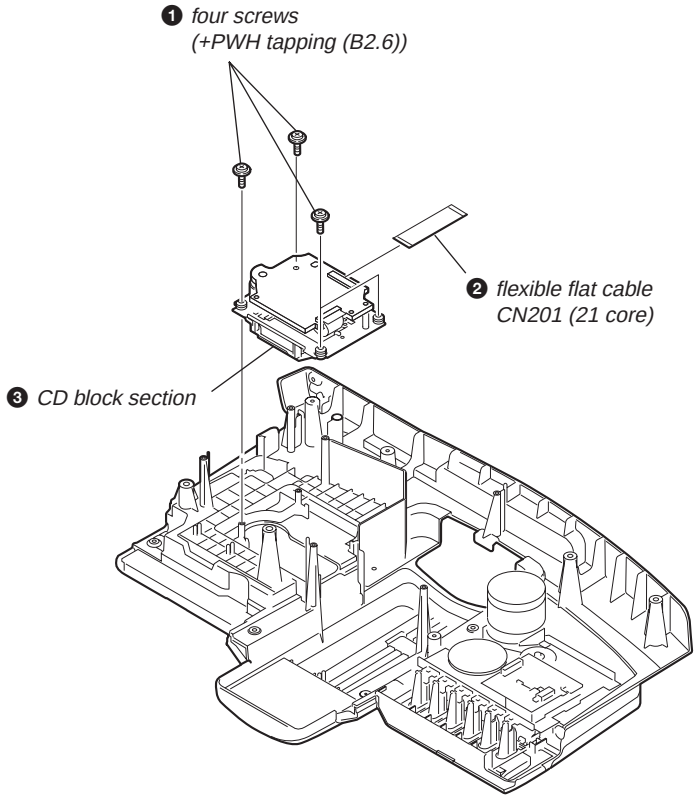

3-16. OPTICAL PICK-UP (KSM-213CDP/C2NP)

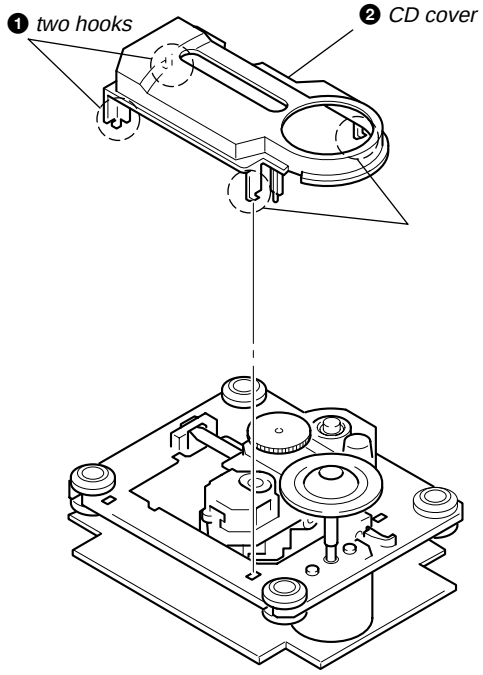

3-17. TC BOARD

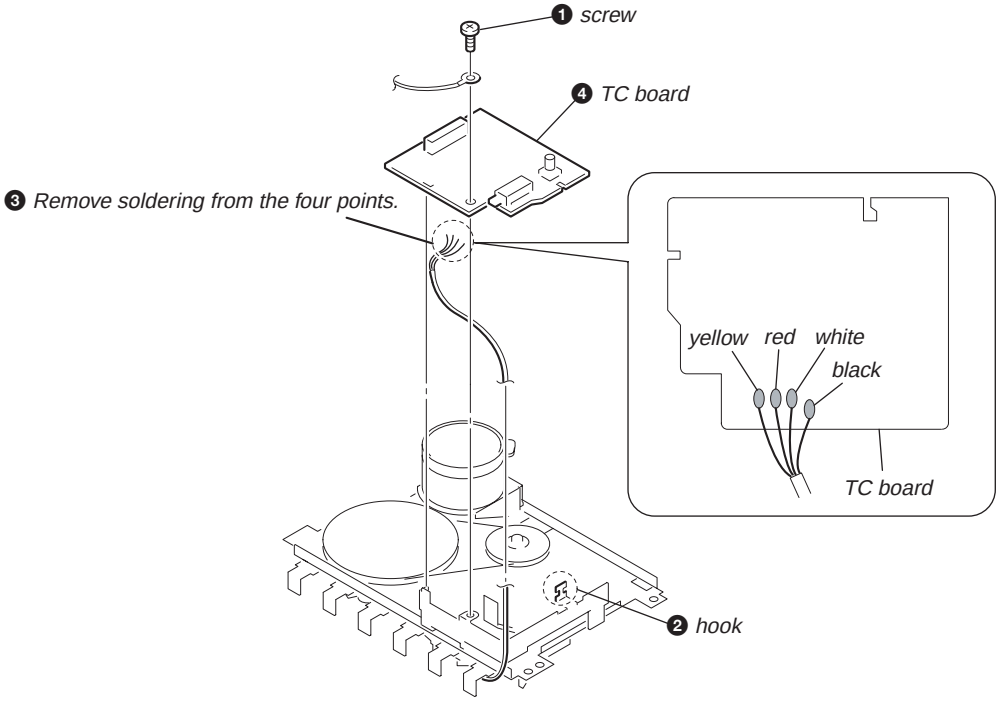

3-18. MAIN BELT, SUB BELT

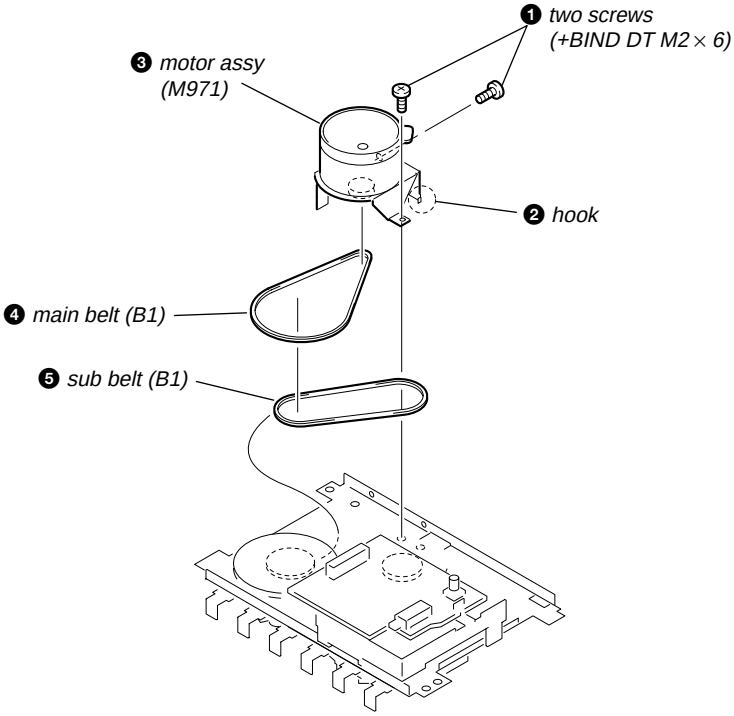

SECTION 4
TEST MODE

[MC COLD RESET]

The cold reset clears all data including preset data stored in the memory to initial conditions. Execute this mode when returning the set to the customer.

Procedure:

1. In the standby status, press the POWER button to turn the power on.
2. Press three buttons of ■, MODE and at last POWER simultaneously.
3. When "RESET" appears, the machine enters standby status.

[PANEL TEST MODE]

Enter The Panel Test Mode

Procedure:

1. In the standby status, press the POWER button to turn the power on.
2. Press three buttons of REPEAT , ■, and DSPL/ENT simultaneously.
3. When the panel test mode is activated, LEDs and segments of LCD are all turned on.

Version Check

Procedure:

1. In the panel test mode (all LEDs and segments of LCD are turned on), press the ROCK button.
2. On the LCD, date and version are displayed "xxxxxxxx". For example, "1127V103".
3. From this status, press the DANCE button, and the destination is displayed. For example, "1014 AU6" or "1014 U2"
4. To release from this mode, press three buttons of REPEAT, ■, and DSPL/ENT simultaneously.

[CHANGE-OVER THE AM TUNING INTERVAL] (G770CP)

The AM tuning interval can be changed over 9 kHz or 10 kHz.

Procedure:

1. Press the POWER button to turn the power on.
2. Press the RADIO/BAND button to select TUNER (AM) function.
3. Select the AM BAND mode and press the DSPL/ENT button for an extended time in the AM BAND state.
4. Then, press the AUTO PRESET/RADIO/BAND for an extended time.
5. Next, press the PRESET + PRESET – button select either 9k/10k.
6. Finally, press the DSPL/ENT button to set the selected step.

[CD SERVICE MODE]

This mode can move the SLED of the optical pick-up, and also can turn the optical pick-up laser power on and off.

Procedure:

1. Press the POWER button to turn the power on.
2. Press three buttons of ■, VOL +, and SALSA simultaneously.
3. It enters the CD service mode and displays "SERVICE".
4. To exit from this mode, press three buttons of ■, VOL +, and SALSA simultaneously.

Key Operation:

PRESET+ ▶▶I, PRESET– I◀◀ :
Use these keys to move the SLED.
When PRESET+ ▶▶I is pressed in this mode, the SLED moves to outer circumference and the message "SLED OUT" is displayed.
When PRESET– I◀◀ is pressed in this mode, the SLED moves to inner circumference and the message "SLED IN" is displayed.

MODE : Use this key to turn the optical pick-up laser power on and off. When the laser power is turned on, the message "LD ON" is displayed. When the laser power is turned off, the message "LD OFF" is displayed.

[CD ERROR CODE]

The past errors of the optical pick-up system (= optical unit + BD board) is displayed as the BD Errors as shown below.

Procedure:

1. Press the POWER button to turn the power on.
2. Press three buttons of VOL +, ■ and DANCE simultaneously.
3. Then, the BD error code is displayed as "D0xxxxxx" (x means hexadecimal number) on the LCD screen as shown below.
4. Every pressing of the PRESET+ ▶▶I button in this mode increments the number after "D" starting from "D0" up to "D4", and then returns to "D0". Every pressing of the PRESET– I◀◀ button in this mode decrements the number after "D". The smaller the error code number is, the newer the error content is.
5. To exit from this mode, press the POWER button to turn the power off.

Contents of "BD Errors"

Error display example

D 0 02 09 01
① ② ③ ④

① It indicates the error history number
0 to 4: The error code number 0 indicates the newest error.

② It indicates the error content
01: The focus servo cannot lock-in.
02: GFS is no good (NG).
03: The startup time exceeds the specified period of time (time over)
04: The focus servo is unlocked continuously.
05: Q code cannot be obtained within the specified period of time.
06: The tracking servo cannot lock-in.
07: Blank disc

③ It indicates the on-going processing of optical pick-up system (= optical unit + BD board) when the trouble has occurred.
01: The CD SHIP mode processing is in progress.
02: The POWER OFF processing is in progress.
03: The INITIALIZE processing is in progress.
04: The optical pick-up system (= optical unit + BD board) is in the stop state.
05: The STOP operation is in progress.
06: The startup processing is in progress.
07: The TOC read-in processing is in progress.
08: The SEARCH operation is in progress.
09: The PLAY operation is in progress.
0A: The PAUSE operation is in progress.
0B: The PLAY – MANUAL SEARCH operation is in progress.
0C: The PAUSE – MANUAL SEARCH operation is in progress.

④ It indicates the operation that is being processed when the trouble has occurred.
It indicates the step number of each processing specified by ③. Because the numbers of steps are different in each processing, this number is different in each processing.

SECTION 5
MECHANICAL ADJUSTMENTS

- **Precaution**

1. Clean the following parts with a denatured-alcohol-moistened swab :
   record/playback head — pinch roller
   erase head — rubber belts
   capstan — idlers
2. Demagnetize the record/playback head with a head demagnetizer. (Do not bring the head magnetizer close to the erase head.)
3. Do not use a magnetized screwdriver for the adjustments.
4. After the adjustments, appiy suitable locking compound to the parts adjusted.
5. The adjustments should be performed with the rated power supply voltage unless otherwise noted.

- **Torque Measurement**

Mode	Torque meter	Meter reading
FWD	CQ-102AS	2.0 – 8.0 mN • m (20 to 80 g • cm) (0.28 – 1.12 oz • inch)
FWD back tension	CQ-102C	0.15 – 0.6 mN • m (1.5 to 6 g • cm) (0.021 – 0.083 oz • inch)
FF	CQ-201AS	5 – 17.7 mN • m (50 to 177 g • cm) (0.7 – 2.48 oz • inch)
REW	CQ-201B	5 – 17.7 mN • m (50 to 177 g • cm) (0.7 – 2.48 oz • inch)

- **Tape Tension Measurement**

Mode	Tension Meter	Meter Reading
FWD	CQ-403A	more than 80 g • cm (more than 2.82 oz • inch)

SECTION 6
ELECTRICAL ADJUSTMENTS

CD SECTION

Note:

1. CD Block is basically constructed to operate without adjustment.
2. Use YEDS-18 disc (3-702-101-01) unless otherwise indicated.
3. Use an oscilloscope with more than 10 MΩ impedance.
4. Clean the object lens by an applicator with neutral detergent when the signal level is low than specified value with the following checks.
5. Check the focus bias check when optical pick-up block is replaced.

FOCUS BIAS CHECK

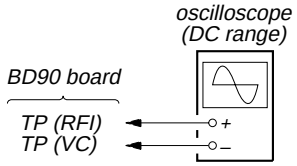

Procedure :

1. Connect oscilloscope to TP (RFI) and TP (VC) on the BD90 board.
2. Press the POWER button to turn the power ON, and press the ⏏ PUSH OPEN/CLOSE button to open the CD disc tray.
3. Set disc (YEDS-18) on the tray and press the ▶II (CD) button to playback.
4. Confirm that oscilloscope waveform is as shown in the figure below. (eye pattern)
   A good eye pattern means that the diamond shape (◊) in the center of the waveform can be clearly distinguished.

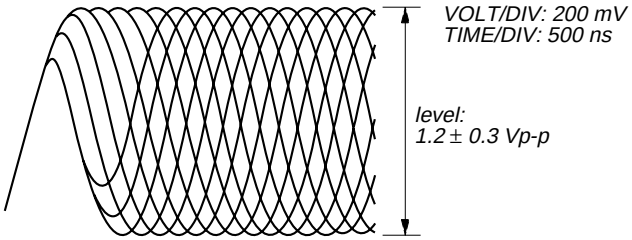

Checking Location:

– BD90 Board (Side B) –

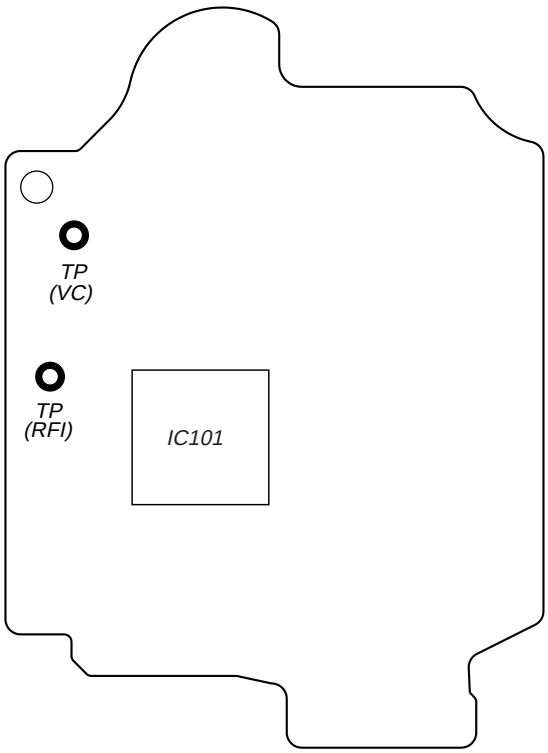

TAPE SECTION | 0 dB=0.775 V

1. Demagnetize the record/playback head with a head demagnetizer.
2. Do not use a magnetized screwdriver for the adjustments.

- **Test Tape**

Tape	Signal	Used for
P-4-A063	6.3 kHz, –10 dB	Azimuth Adjustment

RECORD/PLAYBACK HEAD AZIMUTH ADJUSTMENT

Procedure:

1. Mode: Playback

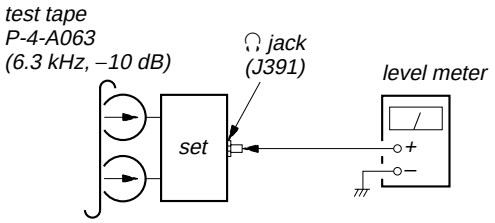

2. Turn the adjustment screw and check output peaks. If the peaks do not match for L-CH and R-CH, turn the adjustment screw so that outputs match within 1dB of peak.

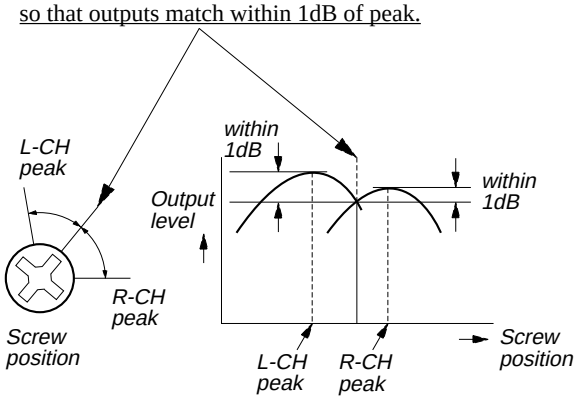

3. Mode: Playback

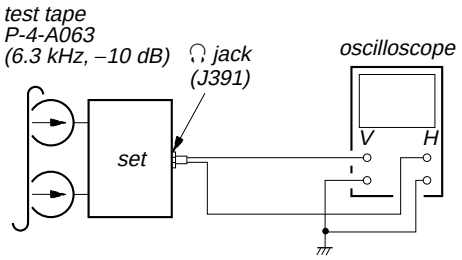

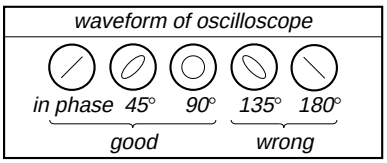

4. After the adjustments, apply suitable locking compound to the pats adjusted.

Adjustment Location: Record/Playback/Erase Head

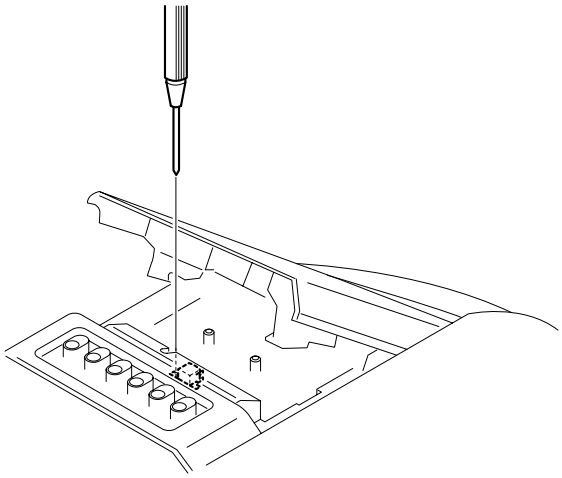

- **Test Tape**

Type	Signal	Used for
WS-48A	3 kHz, 0 dB	tape speed adjustment

Tape Speed Adjustment

Procedure:

Mode: playback

Adjust so that the value on the digital frequency counter is 3,000 Hz.

Specification Value:

Digital frequency counter
2,940 to 3,060 Hz

Adjust so that the frequency at the beginning and that at the end of tape winding are between 2,970 to 3,030 Hz.

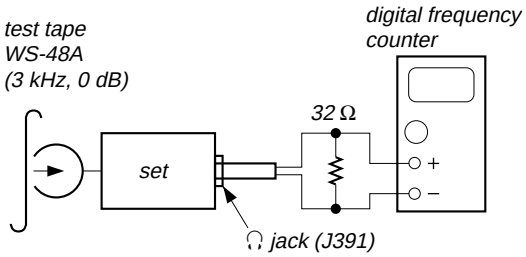

Adjustment Location:

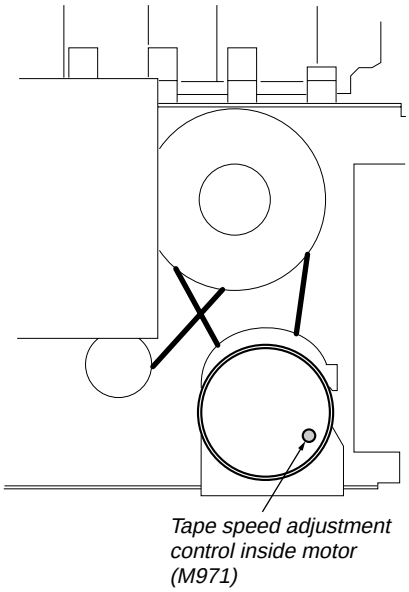

TUNER SECTION

0 dB = 1 μV

• AM Section

Setting:

RADIO BAND•AUTO PRESET button: AM

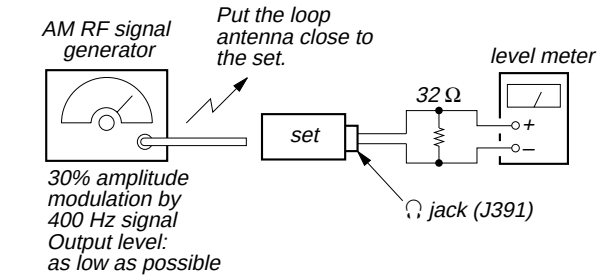

• FM Section

Setting:

RADIO BAND•AUTO PRESET button: FM

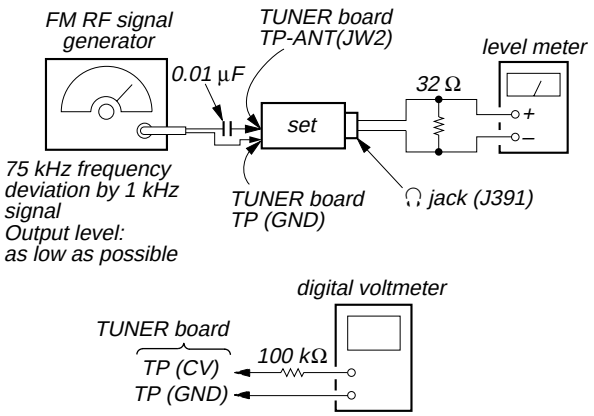

- Repeat the procedures in each adjustment several times, and the tracking adjustments should be finally done by the trimmer capacitors.
- Remove FM antenna in FM adjustment.

AM IF ADJUSTMENT
Adjust for a maximum reading on level meter.
T1
450 kHz

AM FREQUENCY COVERAGE ADJUSTMENT (SP, E41, AUS)		
Frequency Display	531 kHz	1,611 kHz
Reading on Digital voltmeter	1.0 ± 0.05 V	5.0 ± 0.7 V
Adjustment Part	L4	<confirmation>

AM FREQUENCY COVERAGE ADJUSTMENT (EXCEPT SP, E41, AUS)		
Frequency Display	530 kHz	1,710 kHz
Reading on Digital voltmeter	1.0 ± 0.05 V	5.2 ± 0.7 V
Adjustment Part	L4	<confirmation>

AM TRACKING ADJUSTMENT (SP, E41, AUS)	
Adjust for a maximum reading on level meter.	
L3	CT3
621 kHz	1,404 kHz

AM TRACKING ADJUSTMENT (EXCEPT SP, E41, AUS)	
Adjust for a maximum reading on level meter.	
L3	CT3
620 kHz	1,400 kHz

FM IF ADJUSTMENT
Adjust for a maximum reading on level meter.
T2
10.7 MHz

FM FREQUENCY COVERAGE ADJUSTMENT		
Frequency Display	87.5 MHz	108 MHz
Reading on Digital voltmeter	1.3 ± 0.3 V	3.0 ± 0.2 V
Adjustment Part	<confirmation>	L2

FM TRACKING ADJUSTMENT	
Adjust for a maximum reading on level meter.	
L1	CT1
87.5 MHz	108 MHz

Adjustment Location: See page 26.

Adjustment Location:

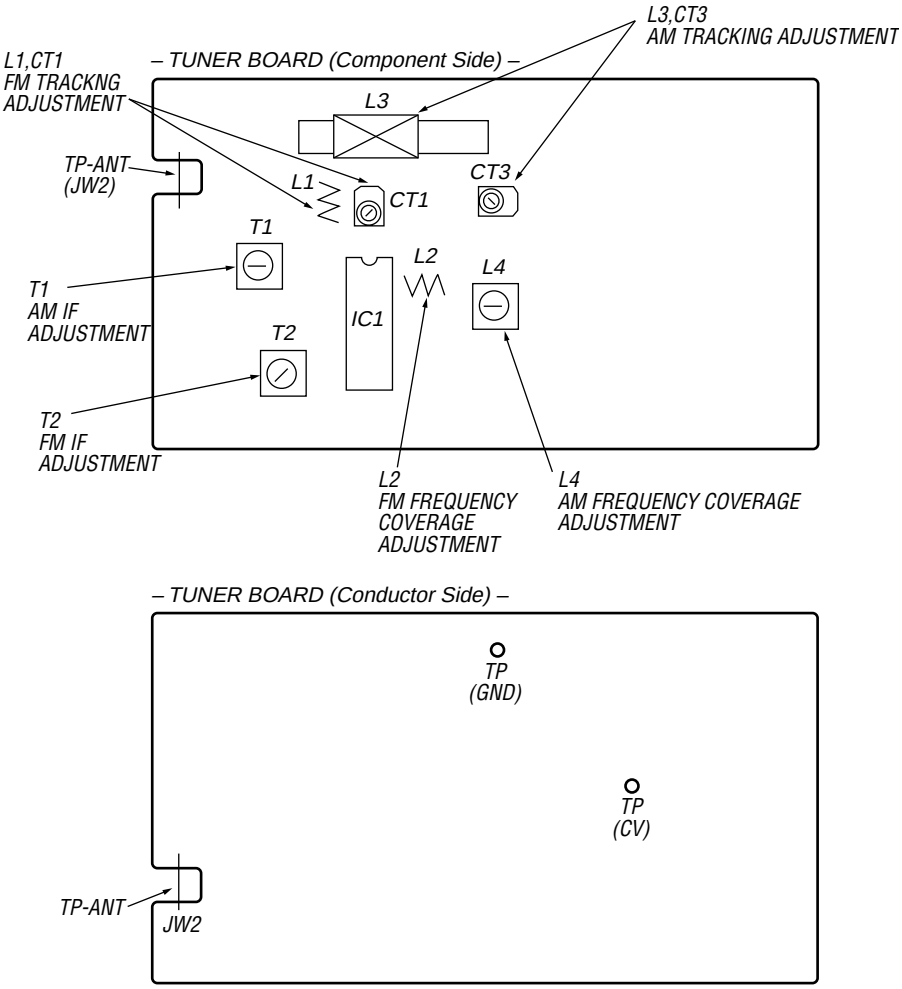

SECTION 7
DIAGRAMS

THIS NOTE IS COMMON FOR PRINTED WIRING BOARDS AND SCHEMATIC DIAGRAMS.
(In addition to this, the necessary note is printed in each block.)

For Schematic Diagrams.
Note:
- All capacitors are in µF unless otherwise noted. (p: pF) 50 WV or less are not indicated except for electrolytics and tantalums.
- All resistors are in Ω and 1/4 W or less unless otherwise specified.
- △ : internal component.
- ▭ : panel designation.

Note:	Note:
The components identified by mark ⚠ or dotted line with mark ⚠ are critical for safety. Replace only with part number specified.	Les composants identifiés par une marque ⚠ sont critiques pour la sécurité. Ne les remplacer que par une piéce portant le numéro spécifié.

- ▭ : adjustment for repair.
- ▬ : B+ Line.
- Voltages and waveforms are dc with respect to ground under no-signal (detuned) conditions.
  – BD90 Board –
  no mark : CD PLAY
  – TUNER Board –
  no mark : FM
  ( ) : AM
  – TC Board –
  no mark : FM
  ( ) : PB
  < > : REC
  [ ] : CD PLAY
  – Other Boards –
  no mark : CD PLAY
- Voltages are taken with a VOM (Input impedance 10 MΩ). Voltage variations may be noted due to normal production tolerances.
- Waveforms are taken with a oscilloscope. Voltage variations may be noted due to normal production tolerances.
- Circled numbers refer to waveforms.
- Signal path.
  ⇨ : FM
  ➡ : AM
  : TAPE PLAY
  : TAPE REC
  : CD
  : LINE IN
- Abbreviation
  AUS : Australian model.
  CND : Canadian model.
  E41 : AC 230 V area in E model.
  E92 : AC 120 V area in E model.
  MX : Mexican model.
  SP : Singapore model.

For Printed Wiring Boards.
Note:
- ○——— : parts extracted from the component side.
- ——— : parts extracted from the conductor side.
- ⊡← : indicates side identified with part number.
- △ : internal component.
- ▬ : Pattern from the side which enables seeing. (The other layers' patterns are not indicated.)

Caution:	
Pattern face side: (Side B)	Parts on the pattern face side seen from the pattern face are indicated.
Parts face side: (Side A)	Parts on the parts face side seen from the parts face are indicated.

- Indication of transistor.

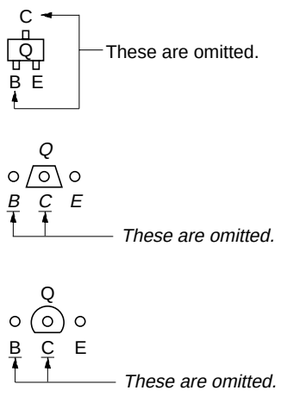

- **Circuit Boards Location**

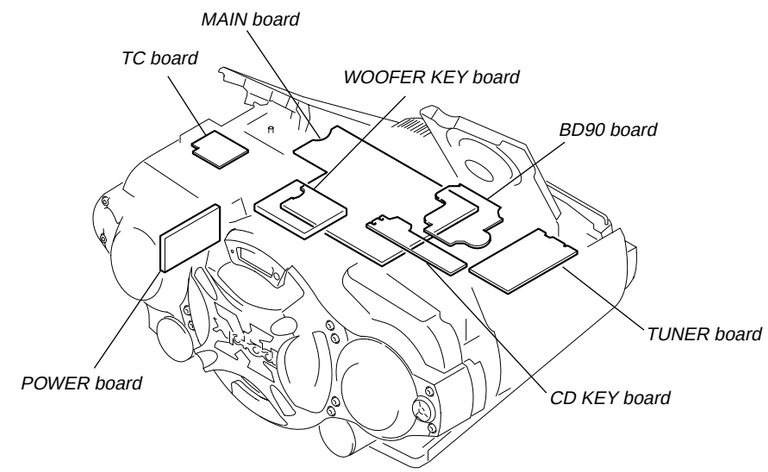

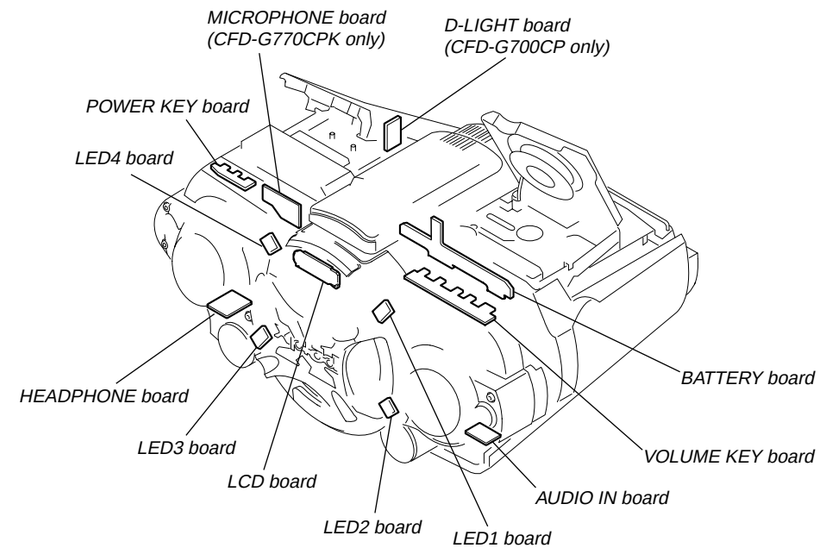

7-1. BLOCK DIAGRAM – TUNER/CD SECTION –

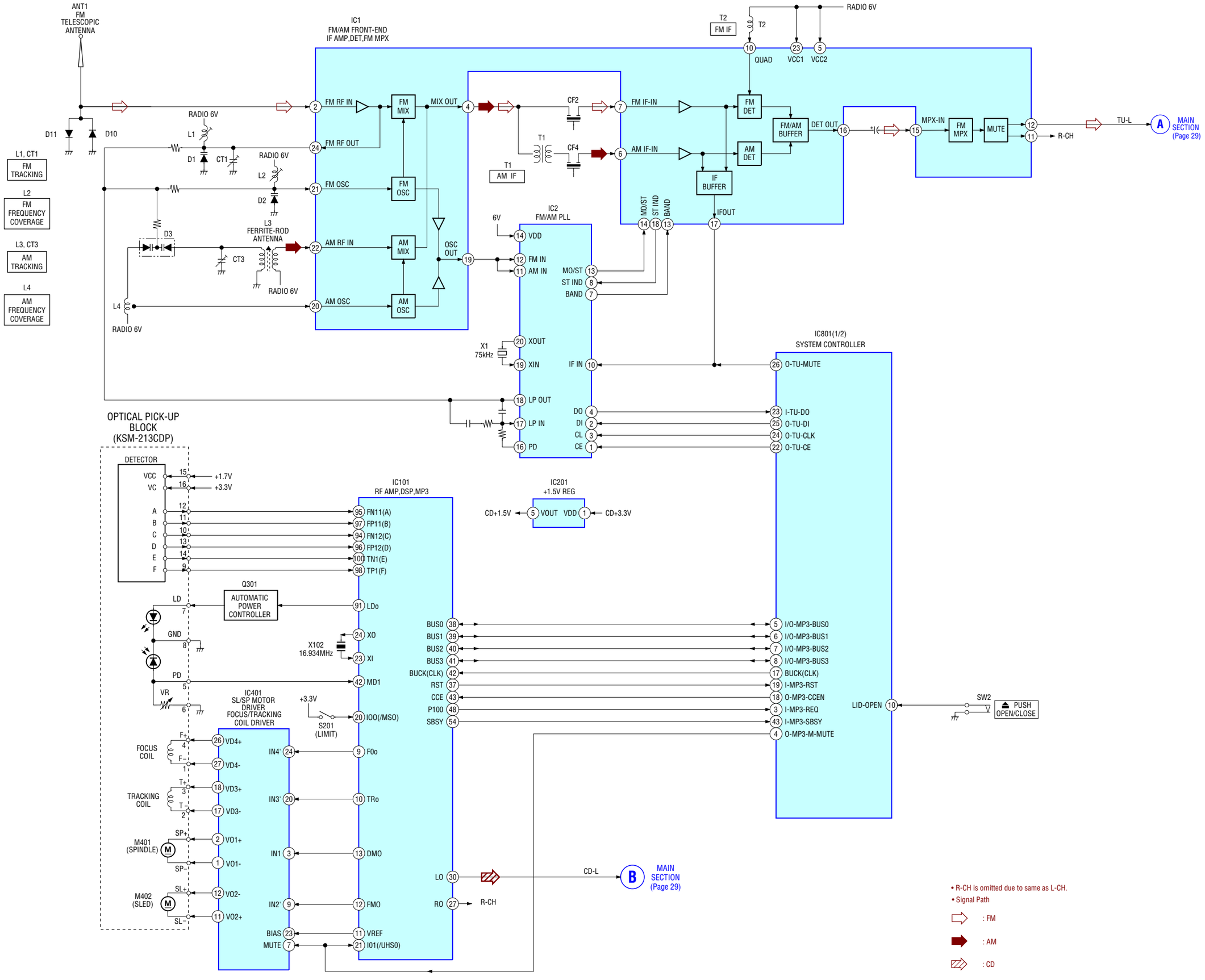

7-2. BLOCK DIAGRAM – MAIN SECTION –

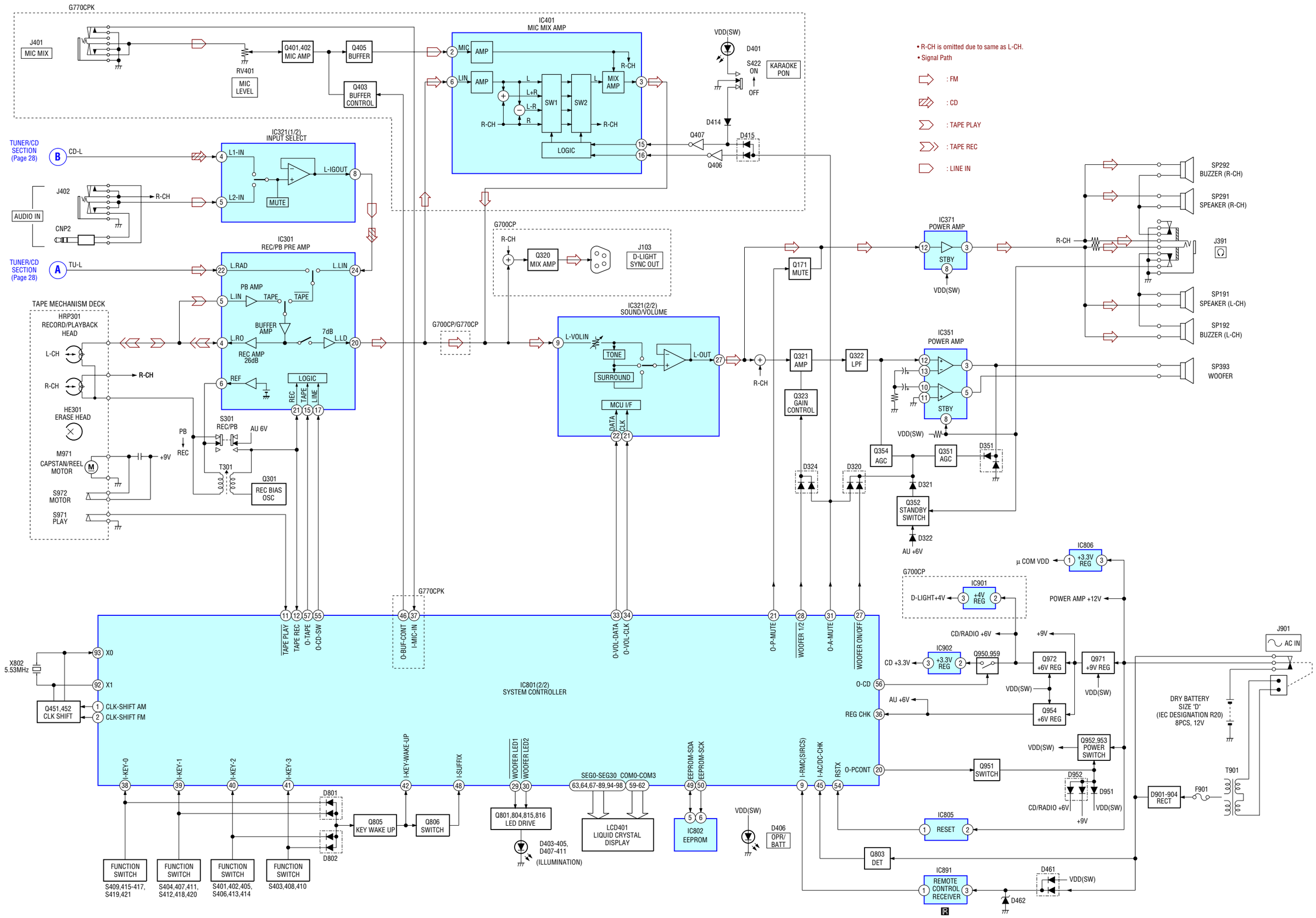

7-3. PRINTED WIRING BOARD – BD90 BOARD –

• See page 27 for Circuit Boards Location. • :Uses unleaded solder.

【BD90 BOARD】(SIDE A)

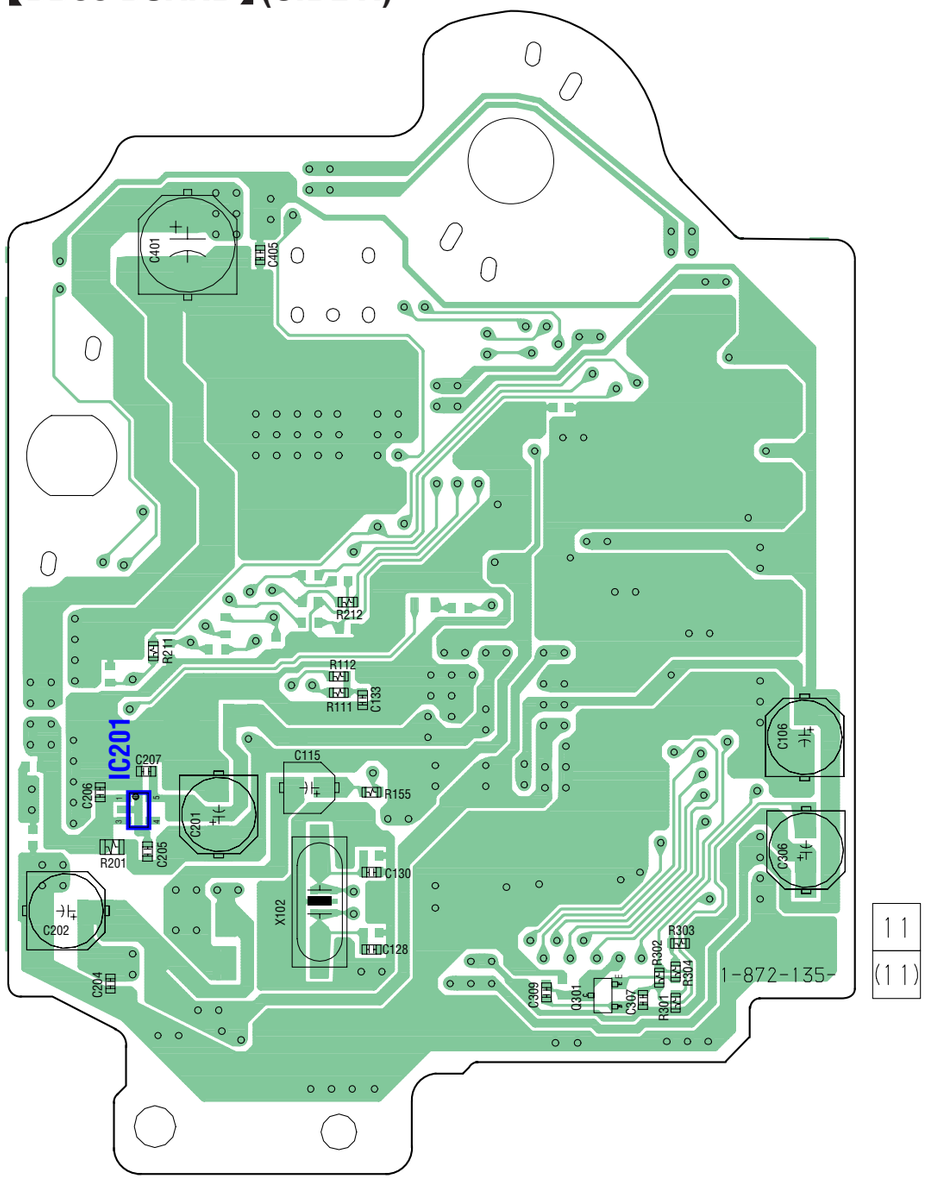

【BD90 BOARD】(SIDE B)

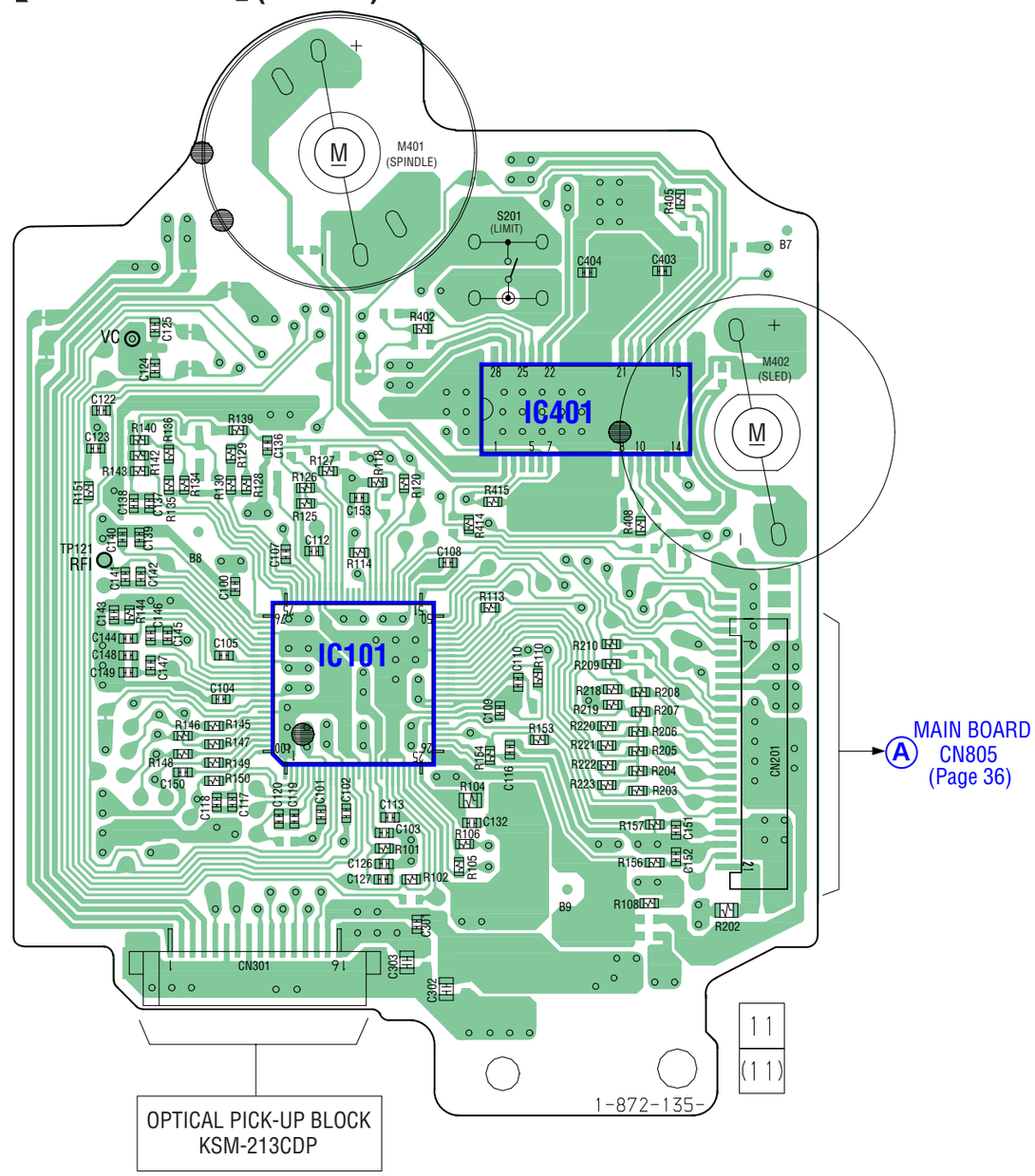

• **Semiconductor Location**

Ref. No.	Location
IC101	E-9
IC201	E-2
IC401	C-10
Q301	F-4

7-4. SCHEMATIC DIAGRAM – BD90 BOARD –

• See page 44 for Waveforms. • See page 44 for IC Block Diagrams. • See page 46 for IC Pin Function Description.

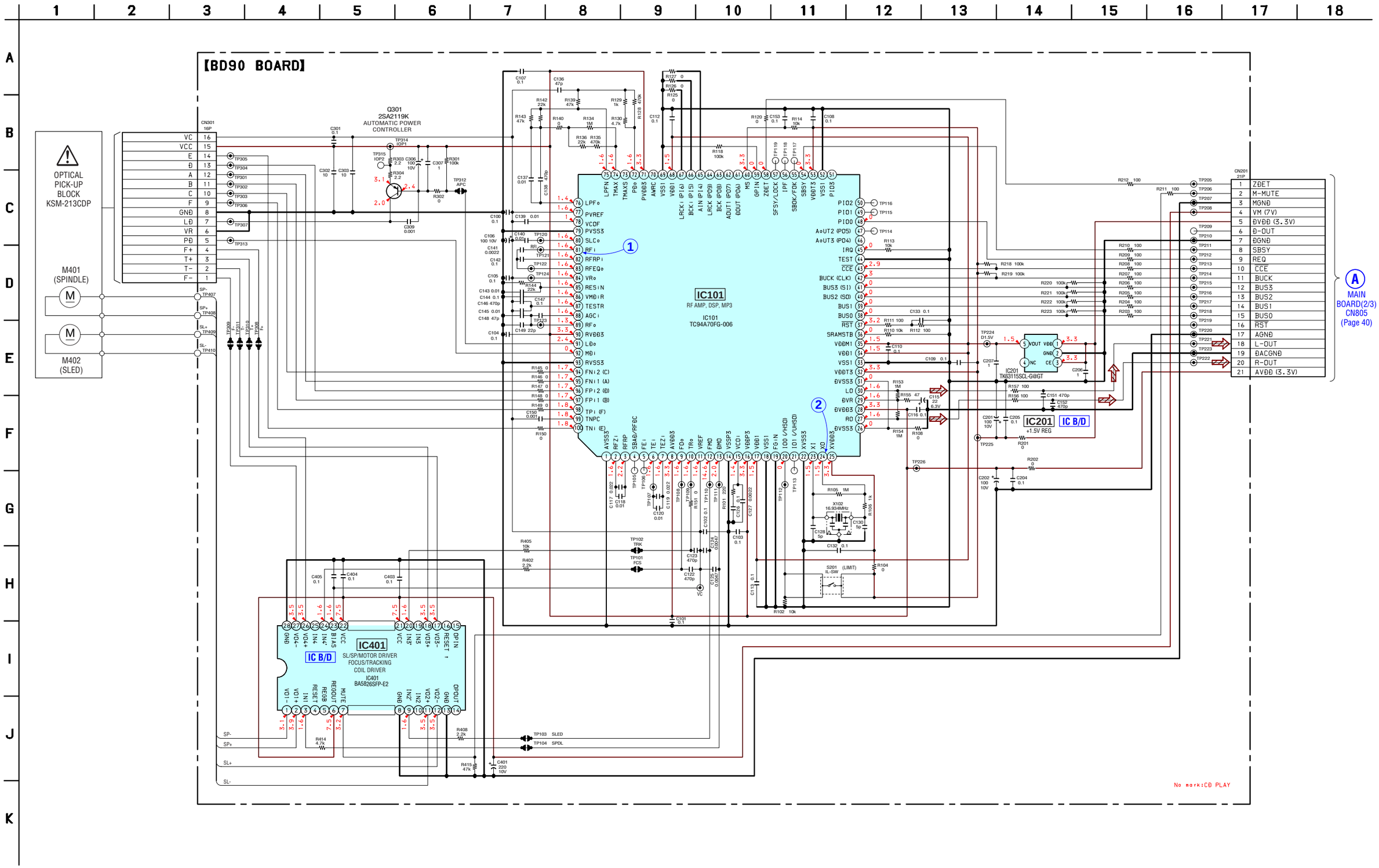

7-5. PRINTED WIRING BOARD – TUNER BOARD –

• See page 27 for Circuit Boards Location.

• :Uses unleaded solder.

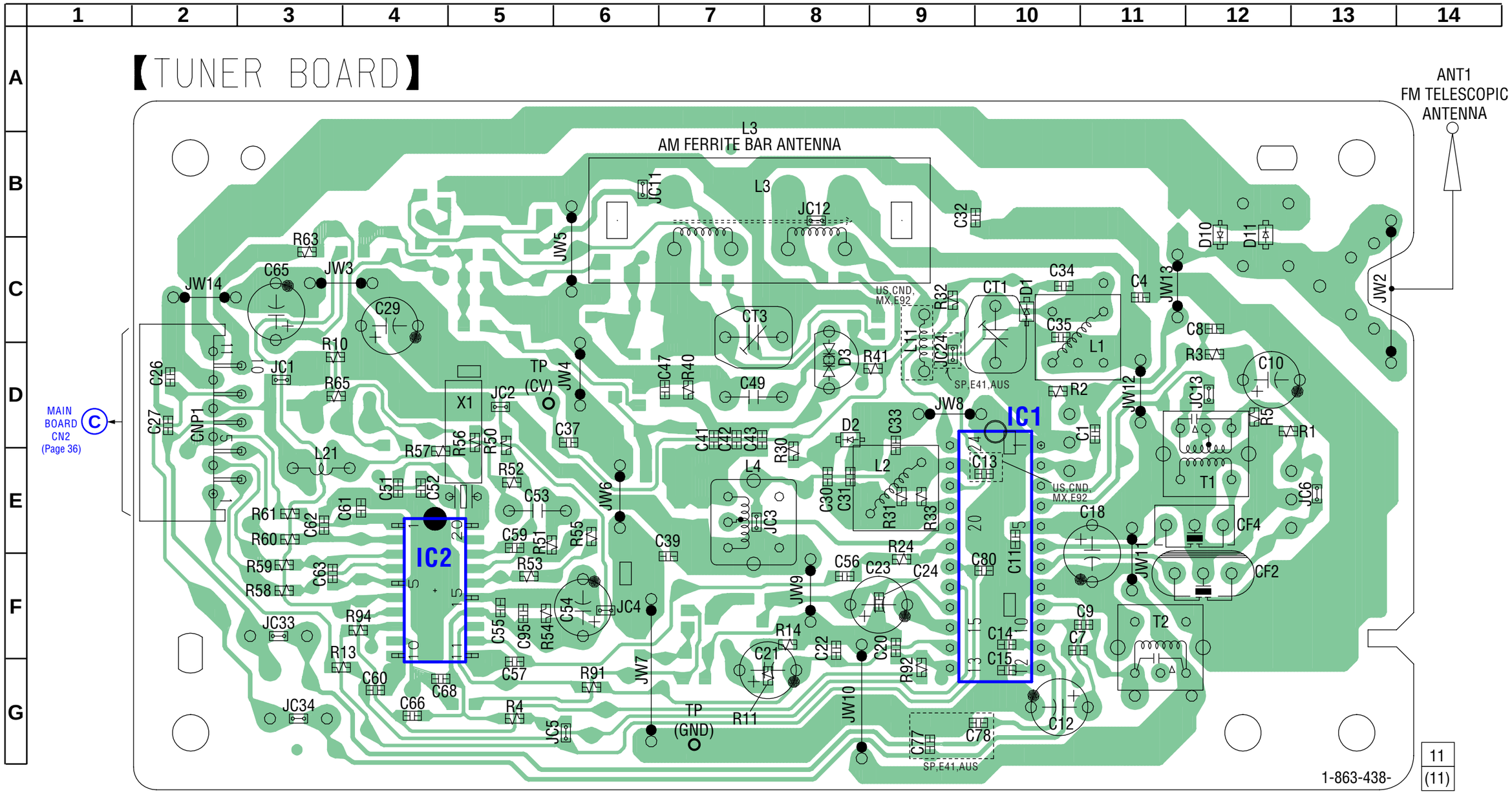

• **Semiconductor Location**

Ref. No.	Location
D1	C-10
D2	D-8
D3	D-8
D10	B-12
D11	B-12
IC1	D-10
IC2	F-4

7-6. SCHEMATIC DIAGRAM – TUNER BOARD –

• See page 44 for Waveforms. • See page 45 for IC Block Diagrams.

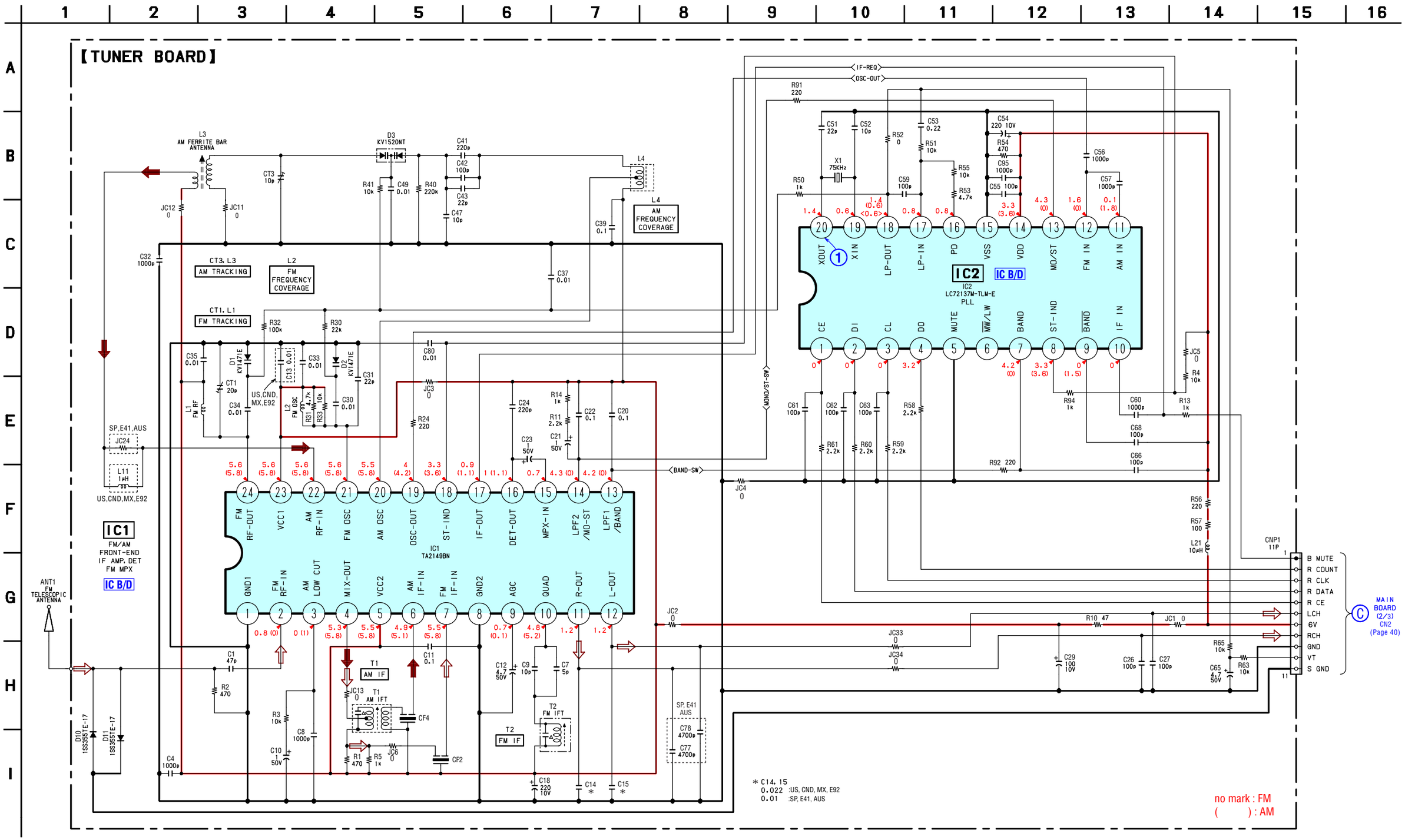

7-7. PRINTED WIRING BOARD – TC BOARD –

• See page 27 for Circuit Boards Location. • :Uses unleaded solder.

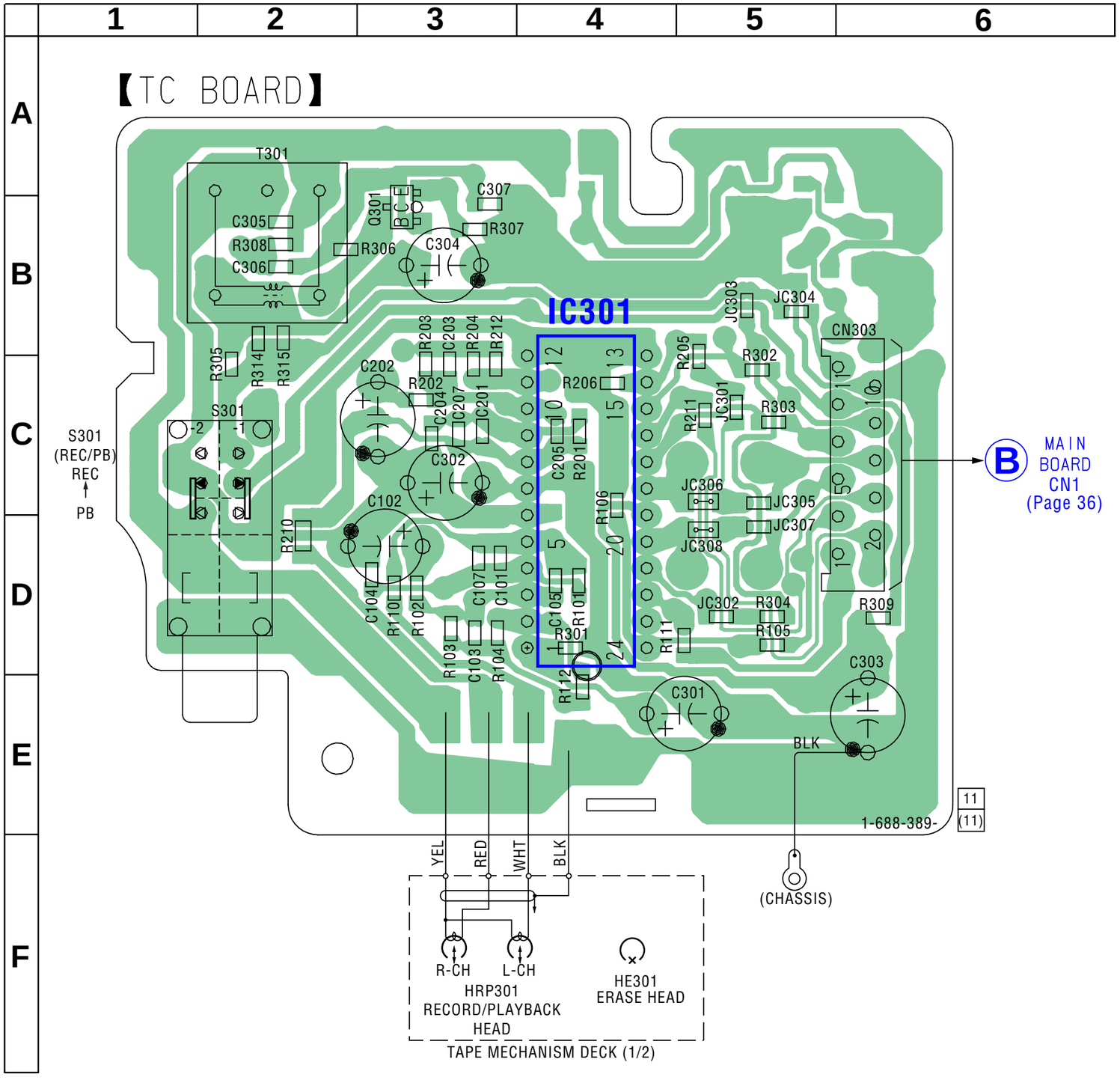

7-8. SCHEMATIC DIAGRAM – TC BOARD –

• See page 44 for Waveforms. • See page 45 for IC Block Diagram.

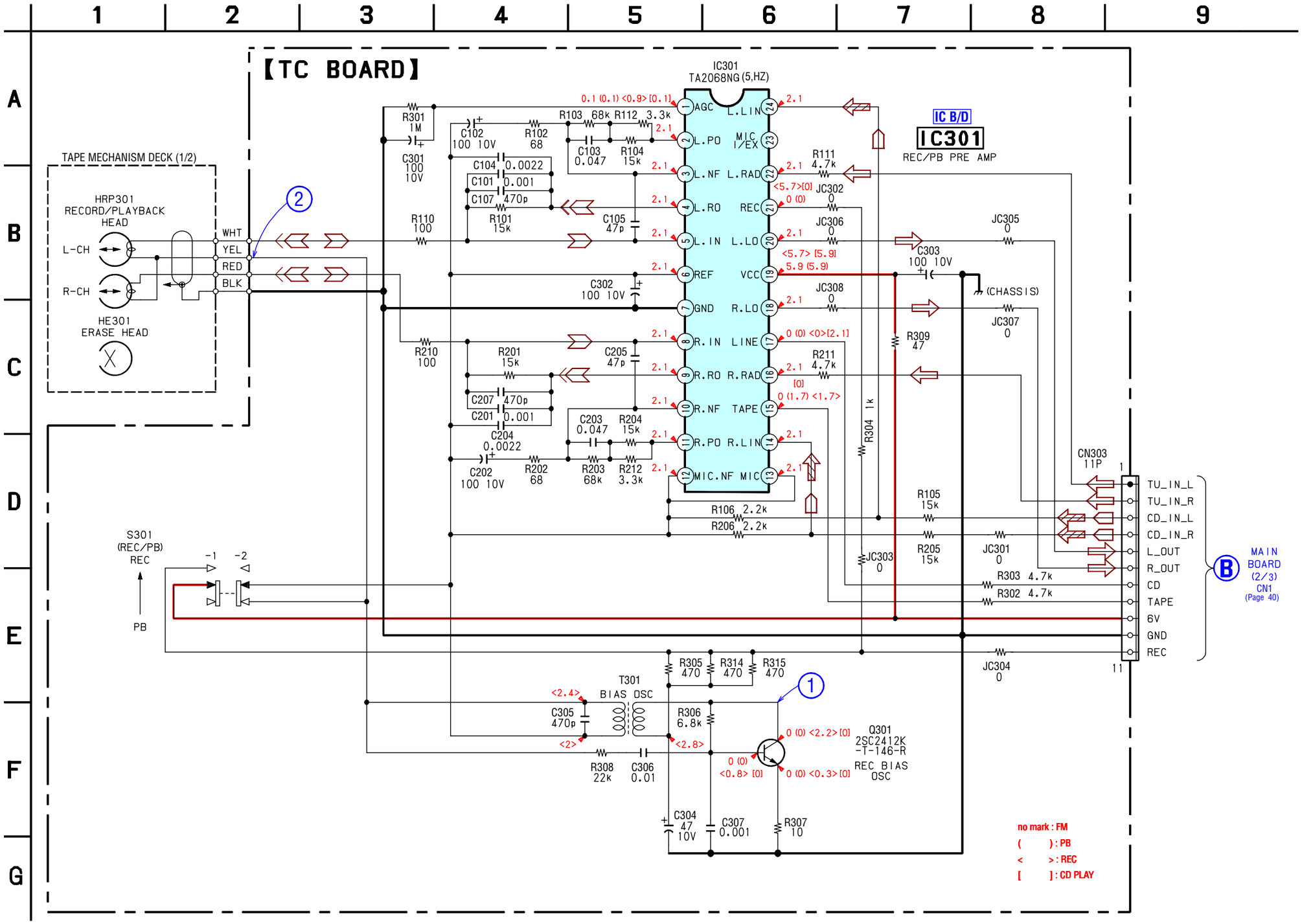

7-9. PRINTED WIRING BOARD – MAIN BOARD –

• See page 27 for Circuit Boards Location.

• :Uses unleaded solder.

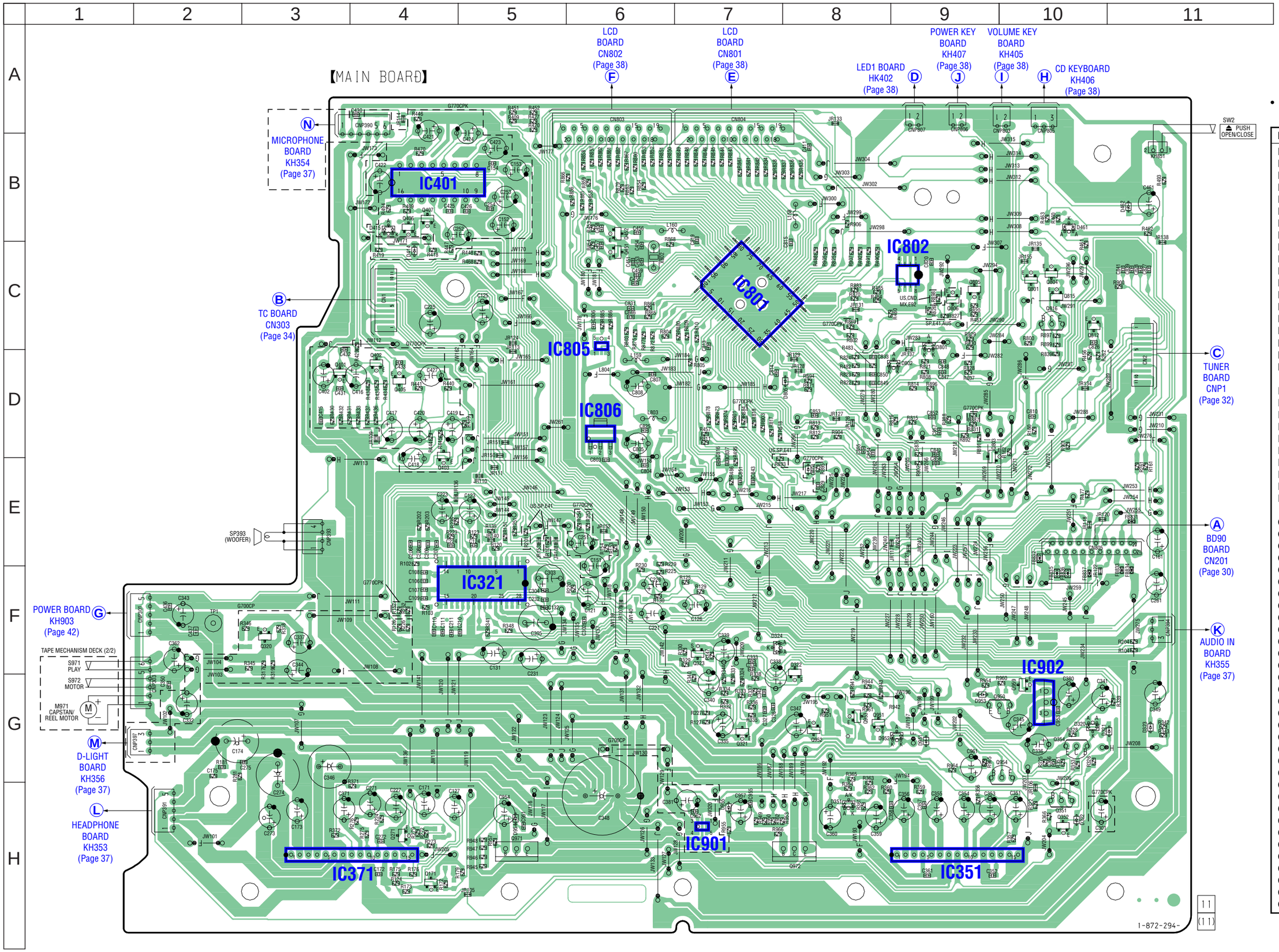

• **Semiconductor Location**

Ref. No.	Location
D320	G-10
D321	G-10
D322	H-10
D323	G-11
D324	F-7
D351	H-8
D414	C-4
D415	B-4
D461	B-10
D462	B-11
D801	C-9
D802	D-9
D804	E-8
D805	D-8
D951	G-9
D952	G-9
D953	G-9
D954	H-5
D955	H-7
IC321	F-5
IC351	H-9
IC371	H-4
IC401	B-4
IC801	C-7
IC802	C-9
IC805	C-6
IC806	D-6
IC901	H-7
IC902	G-10
Q171	H-4
Q271	H-4
Q320	F-3
Q321	G-7
Q322	F-8
Q323	F-7
Q351	H-10
Q352	H-10
Q354	G-10
Q401	D-3
Q402	D-4
Q403	D-4
Q405	D-4
Q406	B-4
Q407	B-4
Q451	C-6
Q452	B-6
Q801	C-10
Q803	D-9
Q804	C-10
Q805	C-9
Q806	C-9
Q812	C-10
Q815	C-10
Q816	C-10
Q950	G-10
Q951	G-8
Q952	G-8
Q953	G-8
Q954	G-10
Q959	G-10
Q971	H-5
Q972	H-8

7-10. PRINTED WIRING BOARDS – AUDIO SECTION –

• See page 27 for Circuit Boards Location.

• :Uses unleaded solder.

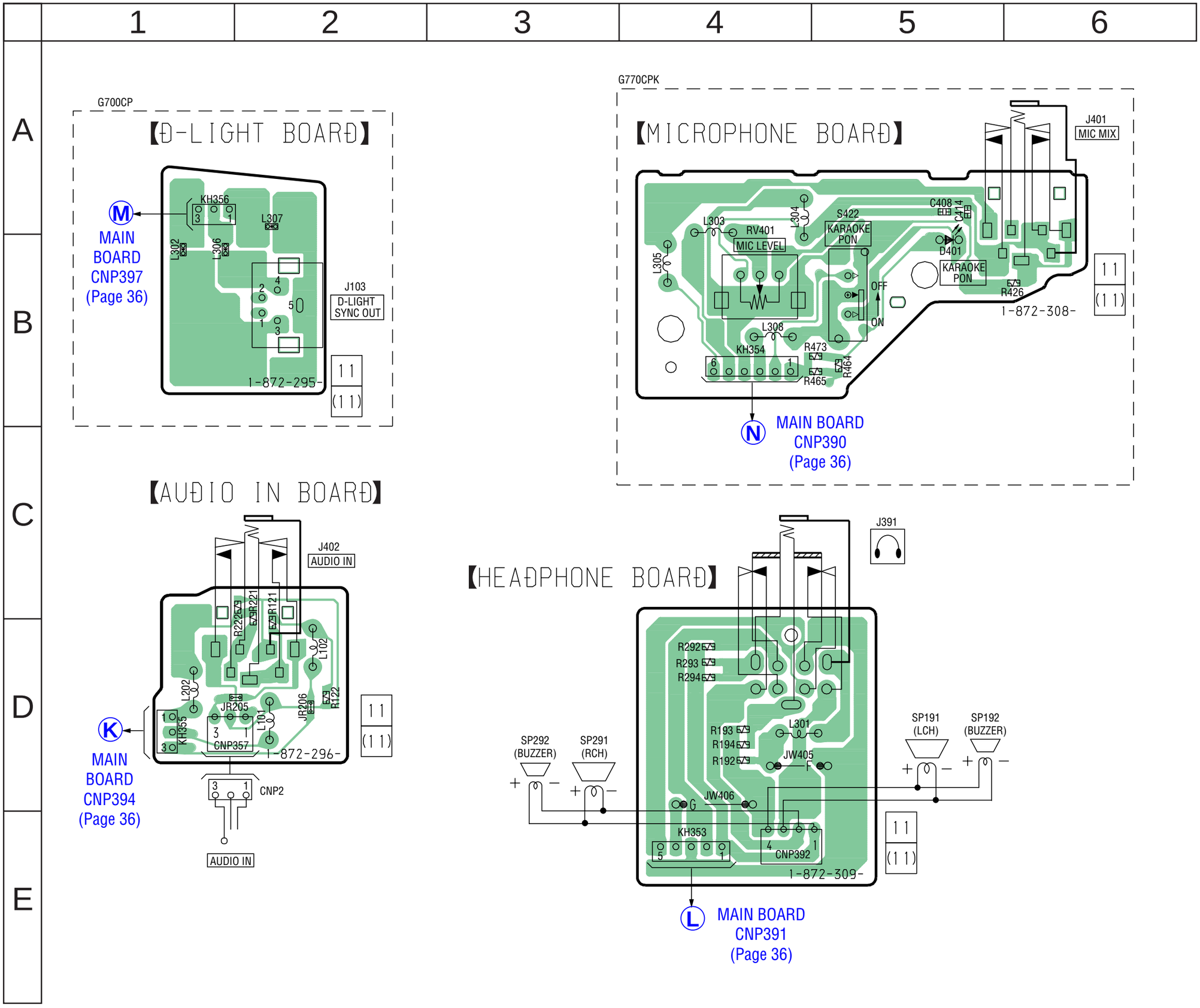

7-11. PRINTED WIRING BOARDS – CONTROL SECTION –

• See page 27 for Circuit Boards Location.

• :Uses unleaded solder.

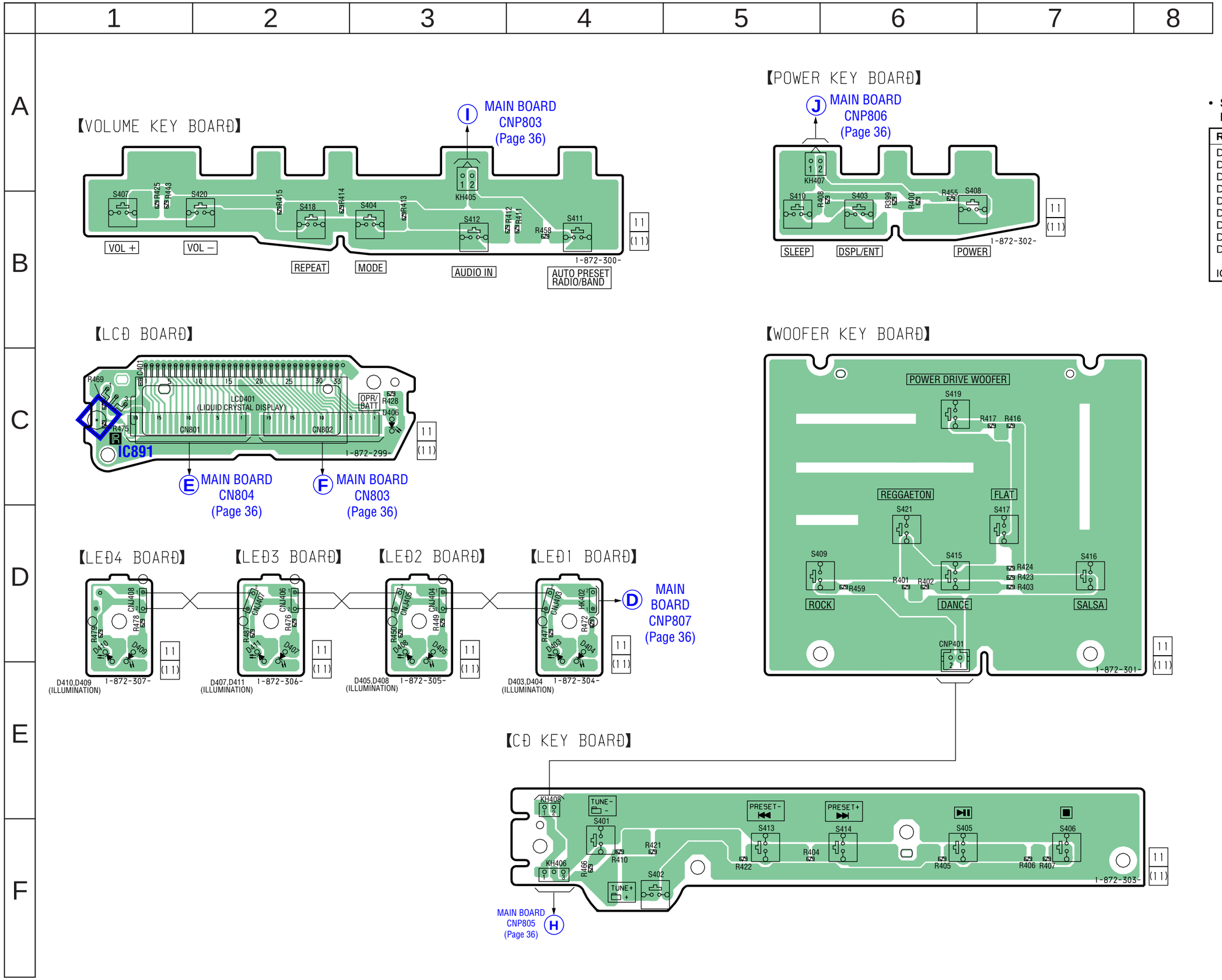

• **Semiconductor Location**

Ref. No.	Location
D403	D-4
D404	D-4
D405	D-3
D406	C-3
D407	D-2
D408	D-3
D409	D-1
D410	D-1
D411	D-2
IC891	C-1

7-12. SCHEMATIC DIAGRAM – MAIN (1/3), AUDIO SECTION –

• See page 44 for IC Block Diagram.

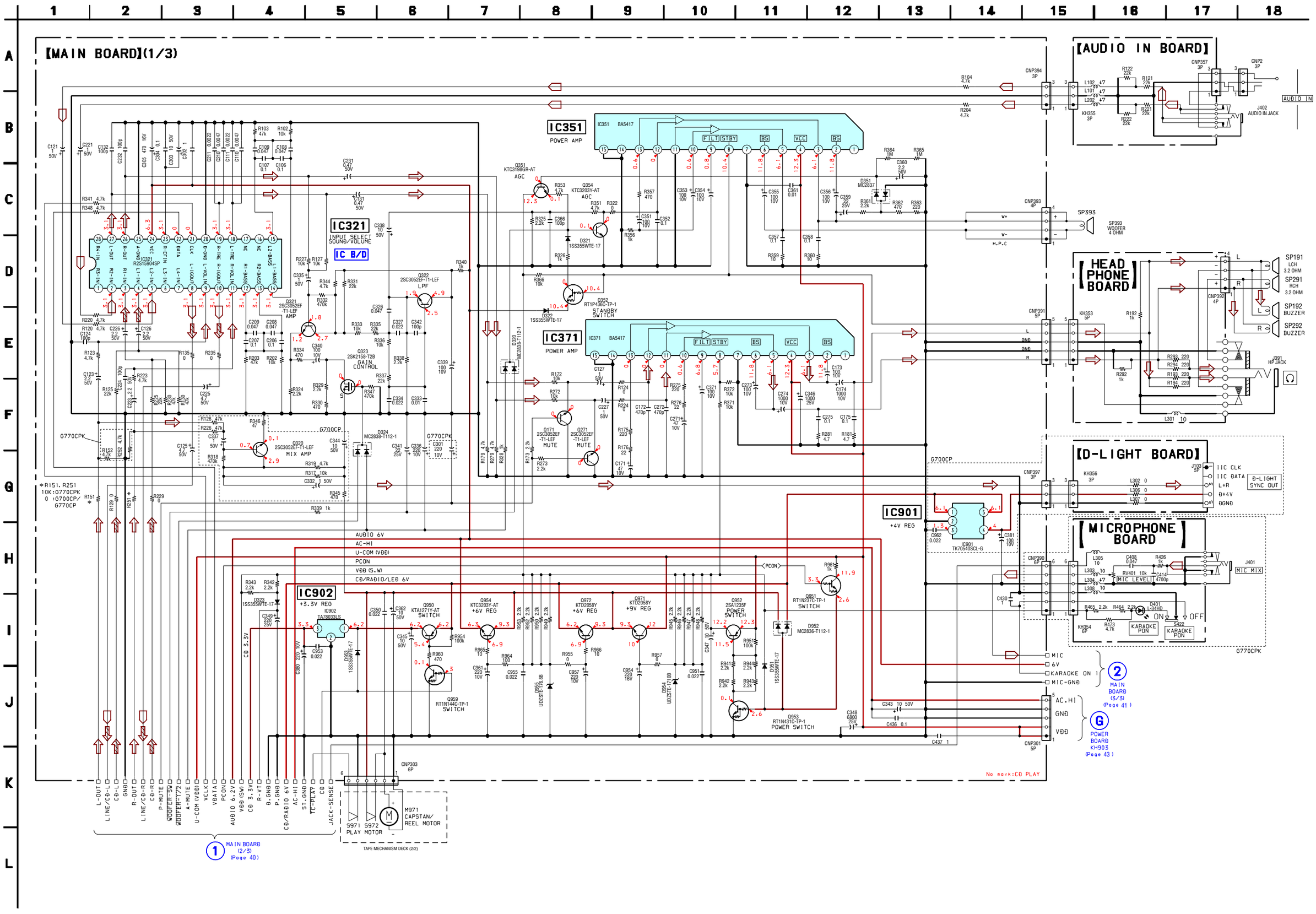

7-13. SCHEMATIC DIAGRAM – MAIN SECTION (2/3) –

• See page 44 for Waveform. • See page 45 for IC Block Diagram. • See page 49 for IC Pin Function Description.

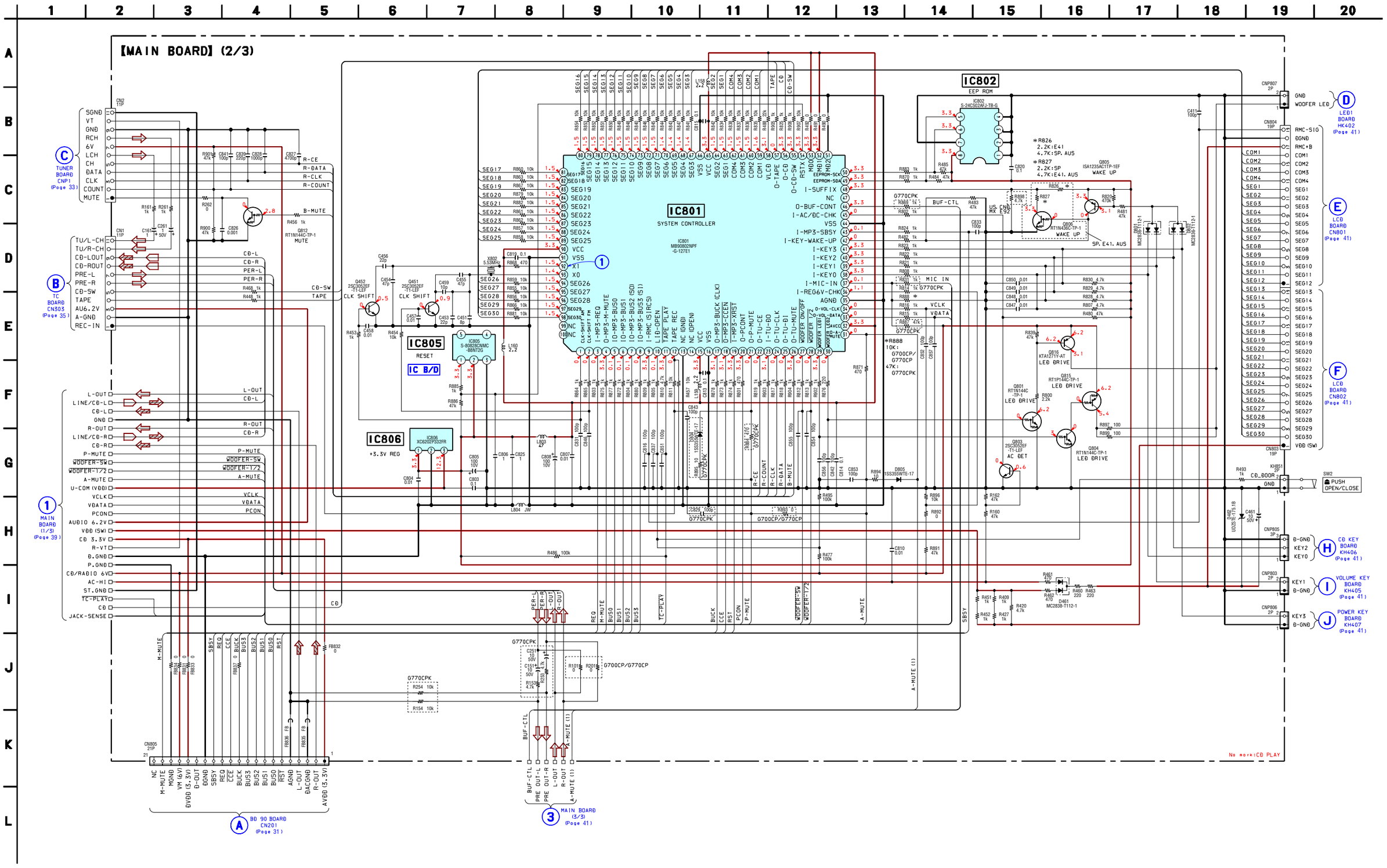

7-14. SCHEMATIC DIAGRAM – MAIN (3/3), CONTROL SECTION –

• See page 44 for IC Block Diagram.

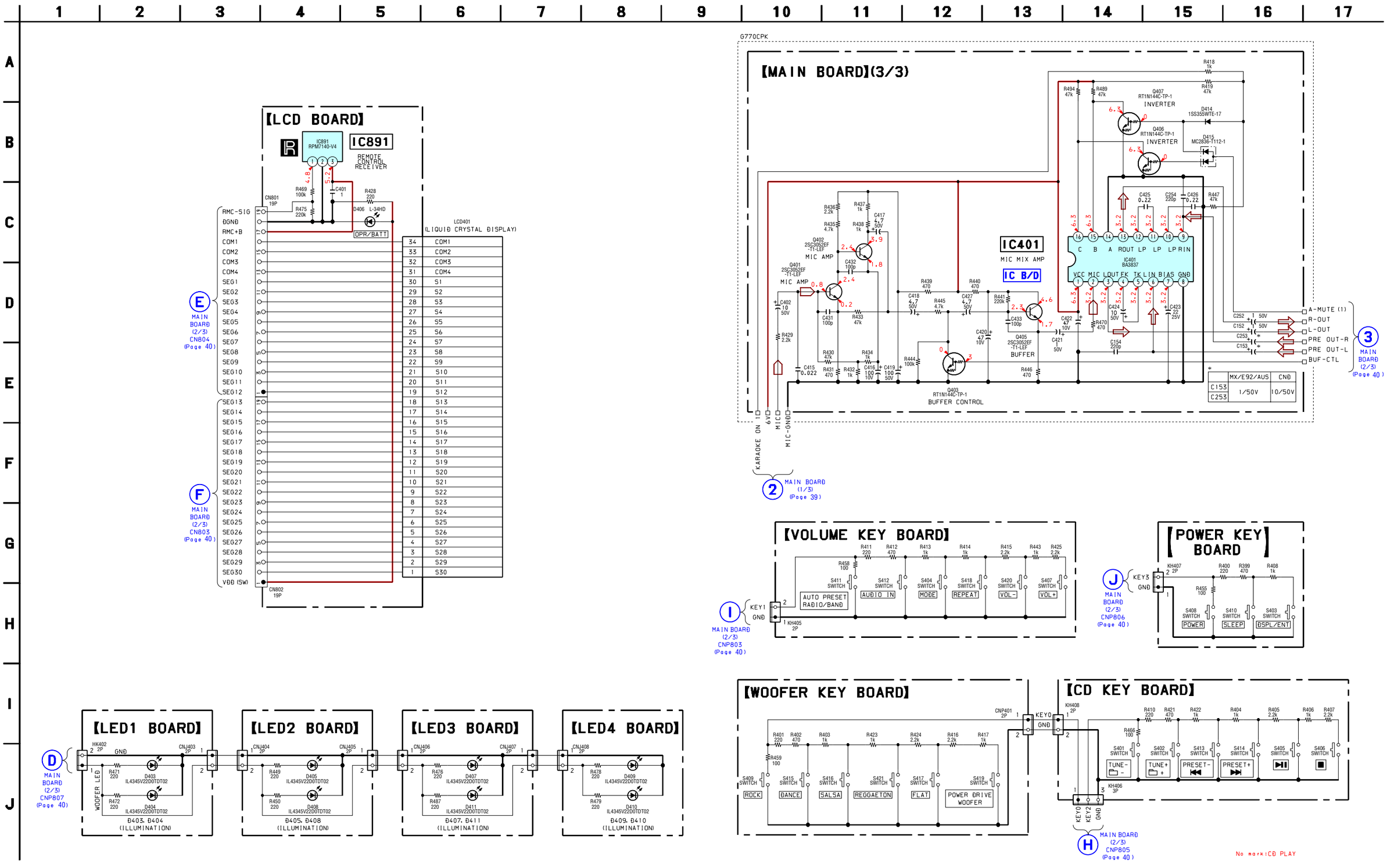

7-15. PRINTED WIRING BOARDS – POWER SECTION –

• See page 27 for Circuit Boards Location. • :Uses unleaded solder.

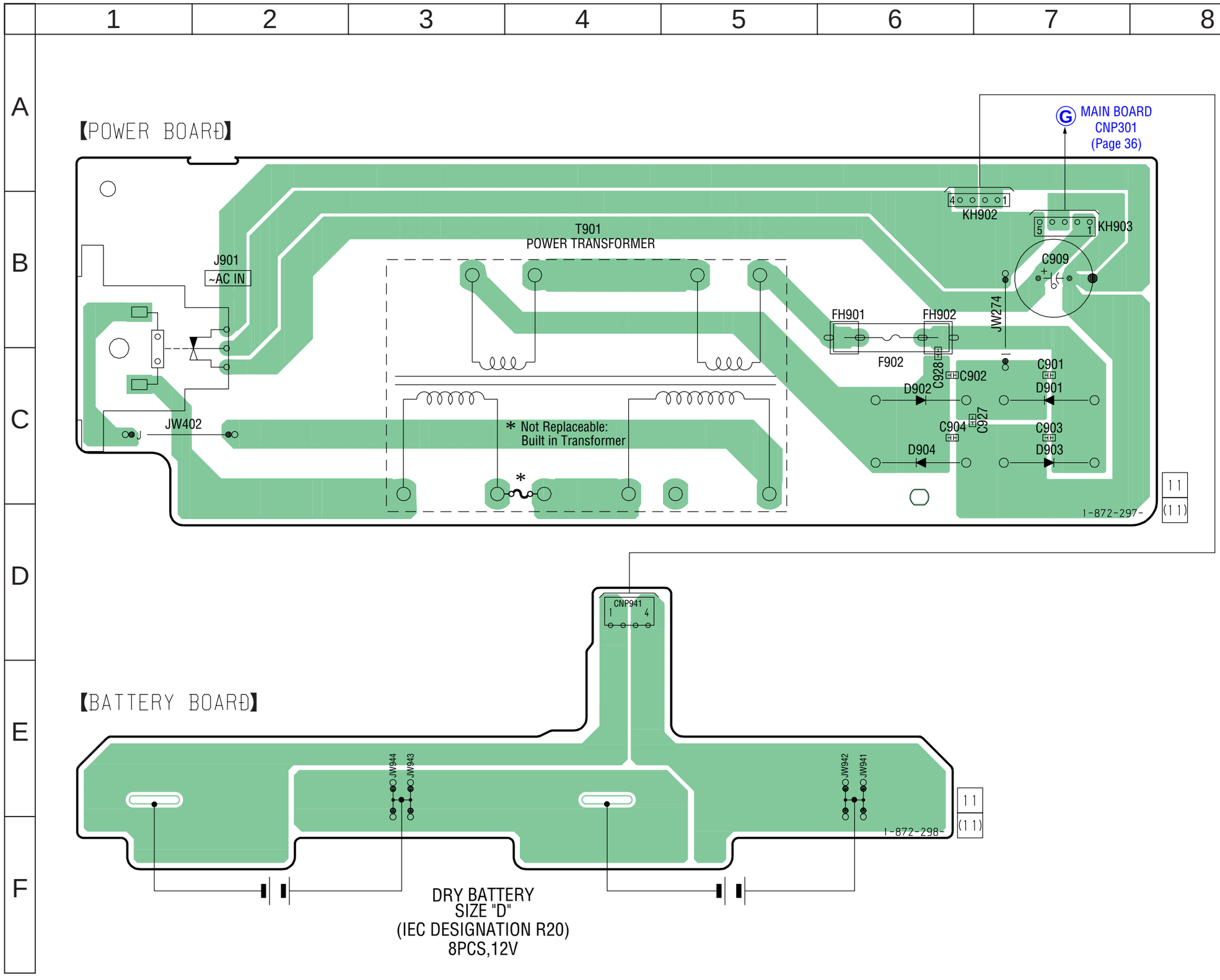

• **Semiconductor Location**

Ref. No.	Location
D901	C-7
D902	C-6
D903	C-7
D904	C-6

7-16. SCHEMATIC DIAGRAM – POWER SECTION –

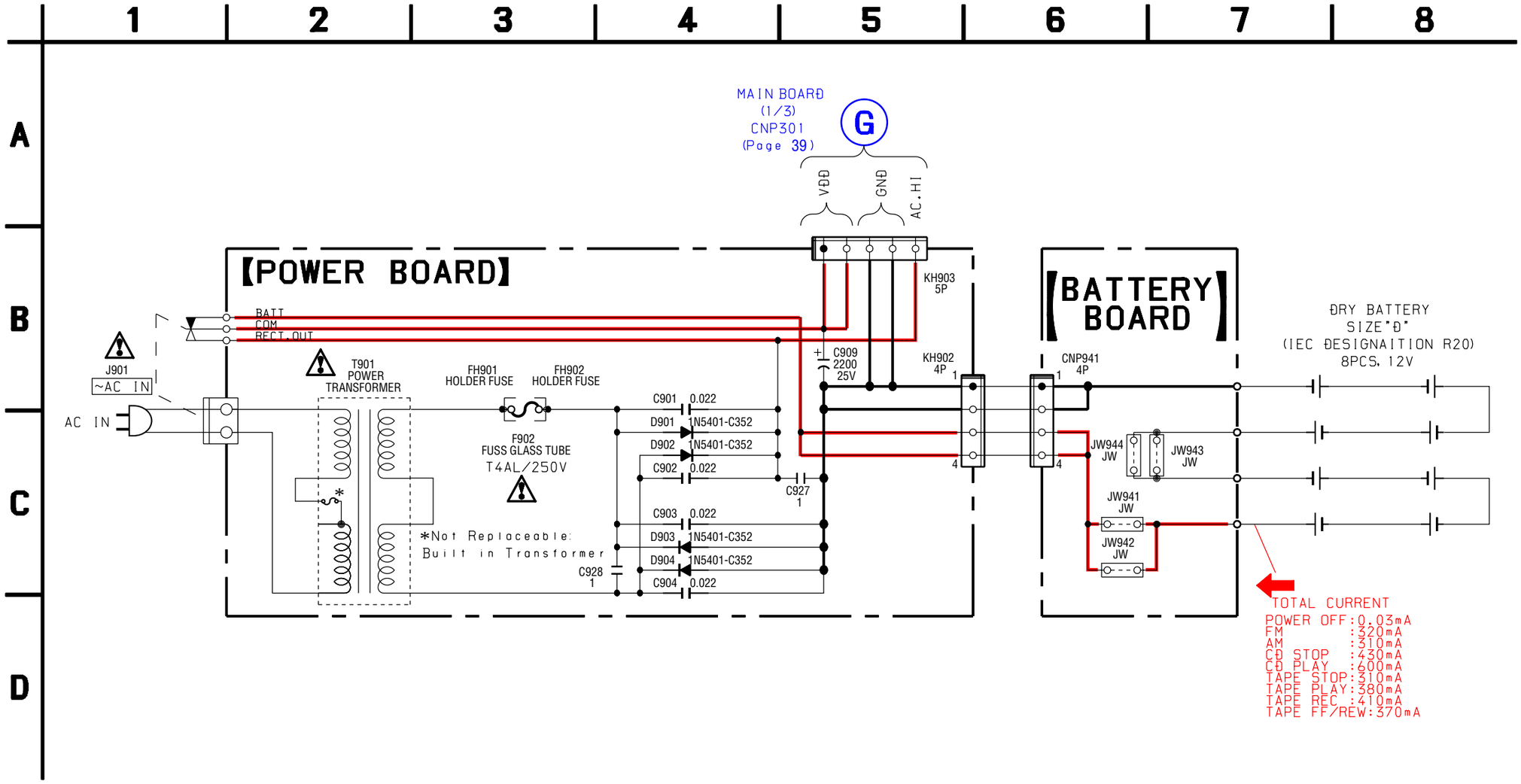

- **Waveforms**

– BD90 Board –

① IC101 ㊶ (RFi)
(CD PLAY mode)

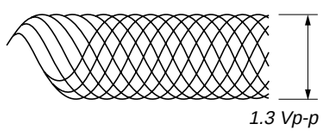

200 mV/DIV, 500 ns/DIV

② IC101 ㉔ (XO)
(CD PLAY mode)

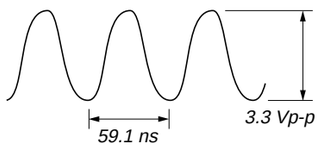

1 V/DIV, 20 ns/DIV

– TUNER Board –

① IC2 ⑳ (XOUT)

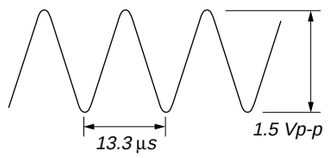

500 mV/DIV, 5 µs/DIV

– TC Board –

① Q301 ⓒ (REC)

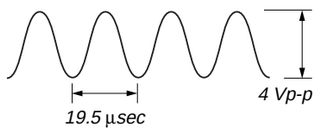

1 V/DIV, 5 µs/DIV

② T301, HRP301 (YEL)

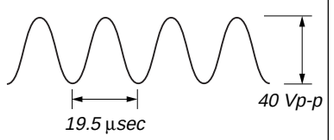

10 V/DIV, 5 µs/DIV

– MAIN Board –

① IC801 ㊷ (X1)

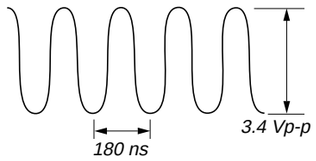

1 V/DIV, 100 ns/DIV

- **IC Block Diagrams**

– BD90 Board –

IC201 TK63115SCL-G@GT

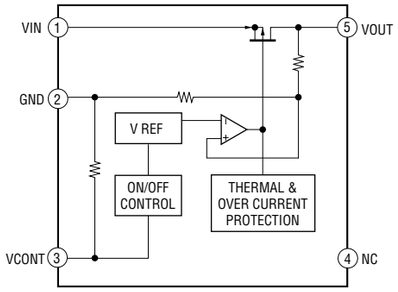

IC401 BA5826SFP-E2

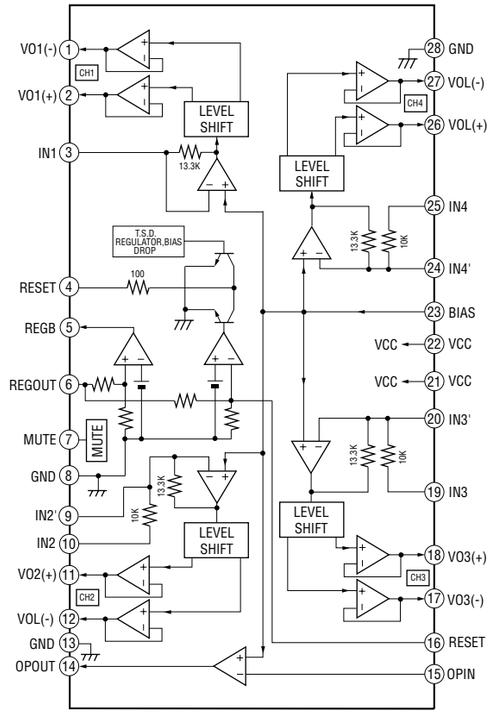

– MAIN Board –

IC321 R2S15904SP

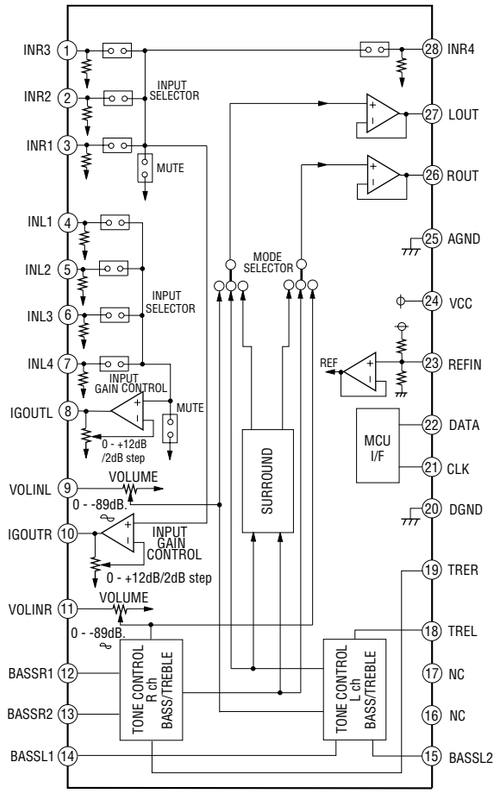

IC401 BA3837

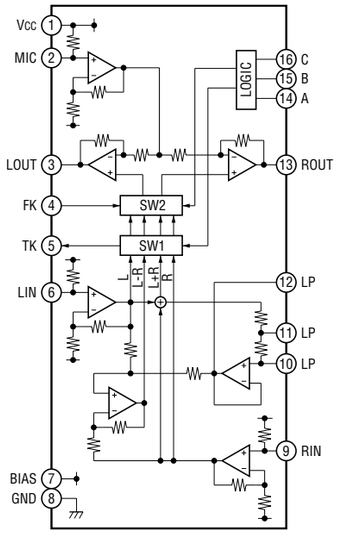

– MAIN Board –

IC805 S-80828CNMC-B8NT2G

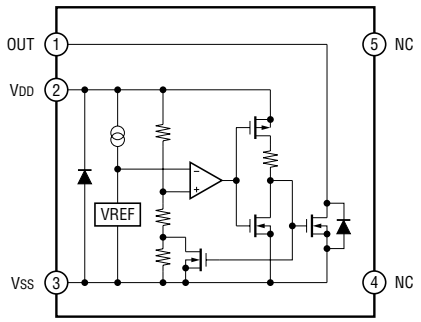

– TC Board –

IC301 TA2068N (5, HZ)

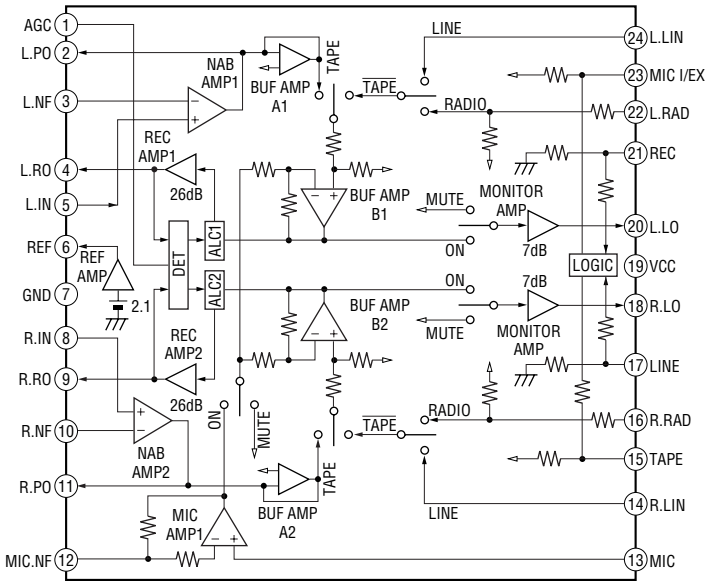

– TUNER Board –

IC1 TA2149BN

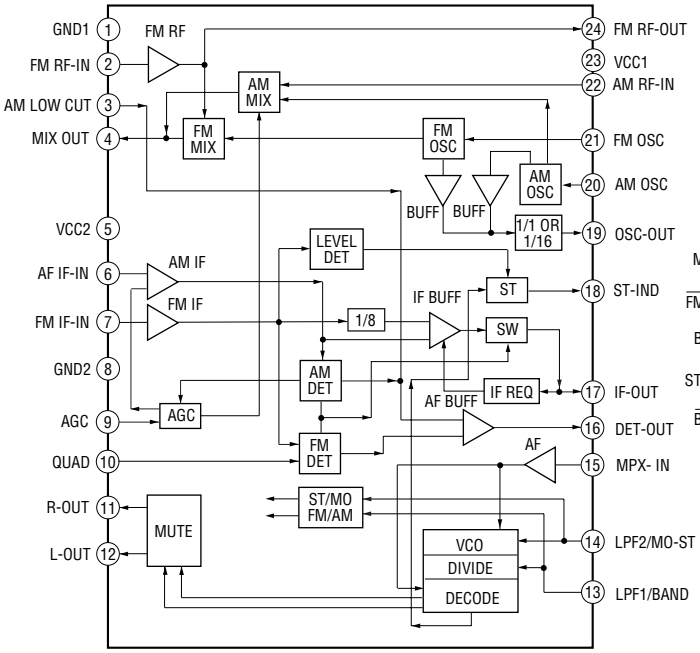

IC2 LC72137M-TLM-E

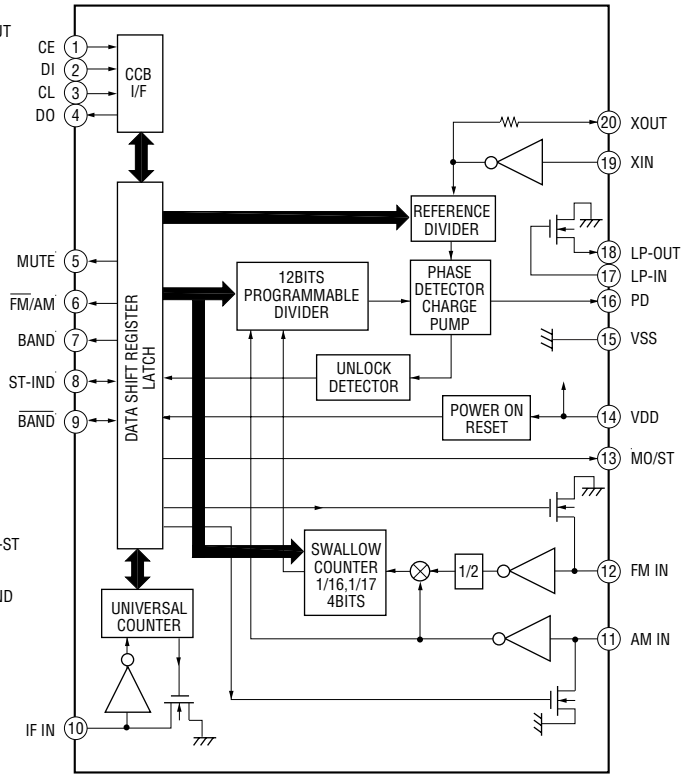

• **IC Pin Function Description**

BD90 BOARD IC101 TC94A70FG-006 (RF AMP, DSP, MP3)

Pin No.	Pin Name	I/O	Description
1	AVSS3	—	Ground terminal (Used CD analog 3.3V)
2	RFZi	I	RF ripple zero cross signal input terminal
3	RFRP	O	RF ripple signal output terminal (Used zero cross)
4	SBAD/RFDC	O	Not used (Open)
5	FEi	O	Not used (Open)
6	TEi	O	Tracking error signal output terminal (Not used (Open))
7	TEZi	I	Tracking error signal input terminal (Used zero cross)
8	AVDD3	—	Power supply terminal (Used CD analog 3.3V)
9	FOo	O	Focus servo equalizer output terminal
10	TRo	O	Tracking servo equalizer output terminal
11	VREF	—	REF of analog power supply terminal
12	FMO	O	Feed servo equalizer output terminal
13	DMO	O	Disc servo equalizer output terminal
14	VSSP3	—	Ground terminal (Used DSP VOC 3.3V)
15	VCOi	O	PD output terminal (Used VCO)
16	VDDP3	—	Power supply terminal (Used DSP VCO 3.3V)
17	VDD1	—	Power supply terminal (Used digital 1.5V)
18	VSS1	—	Ground terminal (Used digital 1.5V)
19	FGiN	I	FG signal input terminal (Used CAV) (Not used (Fixed to “L”))
20	Io0(/HSo)	I	Play speed mode flag input terminal
21	Io1(/UHSo)	I	Not used (Open)
22	XVSS3	—	Ground terminal (Used system clock 3.3V)
23	Xi	I	System clock input terminal (16.934MHz)
24	Xo	O	System clock output terminal (16.934MHz)
25	XVDD3	—	Power supply terminal (Used system clock 3.3V)
26	DVSS3	—	Ground terminal (Used DAC)
27	Ro	O	Audio R-ch data output terminal
28	DVDD3	—	Power supply terminal (Used DAC 3.3V)
29	DVR	—	REF voltage terminal (Used DAC)
30	Lo	O	Audio L-ch data output terminal
31	DVSS3	—	Ground terminal (Used DAC 3.3V)
32	VDDT3	—	Power supply terminal (Used Digital I/O 3.3V)
33	VSS1	—	Ground terminal (Used Digital 3.3V)
34	VDD1	—	Power supply terminal (Used digital 1.5V)
35	VDDM1	—	Power supply terminal (Used 1M bit SRAM 1.5V)
36	SRAMSTB	I	1M bit SRAM standby input terminal (Not used (Fixed to “L”))
37	$\overline{RST}$	I	Reset signal input terminal
38	BUS0	I	Data input terminal (BUS line)
39	BUS1	I	Data input terminal (BUS line)
40	BUS2(So)	I	Data input terminal (Serial output)
41	BUS3(Si)	I	Data input terminal (Serial input)
42	BUCK(CLK)	I	BUS clock input terminal (Serial clock input)
43	$\overline{CCE}$	I	Clip enable input terminal (U-com interface)
44	TEST	I	Test setting terminal (Not used (Fixed to “L”))
45	IRQ	I	Cut in DSP input terminal (Not used (Fixed to “L”))
46	AoUT3(Po4)	O	Not used (Open)
47	AoUT2(Po5)	O	Not used (Open)

Pin No.	Pin Name	I/O	Description
48	Pio0	O	REQ output terminal
49	Pio1	I	Not used (Open)
50	Pio2	I	Not used (Open)
51	Pio3	I	Not used (Open)
52	VSS1	—	Ground terminal (Digital 3.3V)
53	VDDT3	—	Power supply terminal (Digital I/O 3.3V)
54	SBSY	O	Sub code block sync output terminal
55	SBOK/FOK	O	Not used (Open)
56	IPF	O	Not used (Open)
57	SFSY/LOCK	O	Not used (Open)
58	ZDET	O	DAC zero data detect flag output terminal (Not used (Open))
59	GPIN	I	General purpose input terminal (Not used (Fixed to “L”))
60	MS	I	U-com I/F mode select input terminal (Fixed to “H”)
61	DoUT(Po6)	O	Not used (Open)
62	AoUT1(Po7)	O	Not used (Open)
63	BCK(Po8)	O	Not used (Open)
64	LRCK(Po9)	O	Not used (Open)
65	AiN(Pi4)	I	Data input terminal (Used DAC) (Not used (Fixed to “L”))
66	BCKi(Pi5)	I	Bit clock input terminal (Used DAC) (Not used (Fixed to “L”))
67	LRCKi(Pi6)	I	Channel clock input terminal (Used DAC) (Not used (Fixed to “L”))
68	VDD1	—	Power supply terminal (Digital 1.5V)
69	VSS1	—	Ground terminal (Digital 1.5V)
70	AWRC	O	Not used (Open)
71	PVDD3	—	Power supply terminal (PLL 3.3V)
72	PDo	O	Phase error signal of EFM signal and PLCK signal output terminal
73	TMAXS	O	Not used (Open)
74	TMAX	O	Output terminal of TMAX detect signal
75	LPFN	I	Reverse input terminal of AMP (PLL-LPF)
76	LPFo	O	Output terminal of AMP (PLL-LPF)
77	PVREF	—	1.65V REF power terminal (Only PLL)
78	VCoF	O	VCO filter output terminal
79	PVSS3	—	Ground terminal (PLL 3.3V)
80	SLCo	O	EFM slice level output terminal
81	RFi	I	RF signal input terminal
82	RFRPi	I	RF ripple signal input terminal
83	RFEQo	O	RF equalizer output terminal
84	VRo	O	1.65V REF voltage output terminal
85	RESiN	O	REF resister terminal (22k/0.01u)
86	VMDiR	—	REF voltage of APC circuit output terminal
87	TESTR	O	LPF terminal (RFEQO offset correct)
88	AGCi	I	RF signal adjustment AMP input terminal
89	RFo	O	RF signal AMP output terminal
90	RVDD3	—	3.3V Power supply terminal (RF AMP)
91	LDo	O	Laser diode AMP output terminal
92	MDi	I	Monitor photo diode AMP input terminal
93	RVSS3	—	Ground terminal (RF AMP 3.3V)
94	FNi2(C)	I	Main beam input terminal (Connect to pin diode C)
95	FNi1(A)	I	Main beam input terminal (Connect to pin diode A)
96	FPi2(D)	I	Main beam input terminal (Connect to pin diode D)

Pin No.	Pin Name	I/O	Description
97	FPi1(B)	I	Main beam input terminal (Connect to pin diode B)
98	TPi(F)	I	Sub beam AMP input terminal (Connect to pin diode F)
99	TNPC	O	Capacitor connect terminal to the middle pointof TNI/TPI input register
100	TNi(E)	I	Sub beam AMP input terminal (Connect to pin diode E)

MAIN BOARD IC801 MB90802NPF-G-127E1 (SYSTEM CONTROLLER)

Pin No.	Pin Name	I/O	Description
1	CLK-SHIFT_AM	O	Clock shift signal output for AM radio
2	CLK-SHIFT_FM	O	Clock shift signal output for FM radio
3	I-MP3-REQ	I	Request signal input from CD-DSP-MP3 decorder (IC101)
4	O-MP3-M-MUTE	O	Mute signal output to Spindle and Sleding motor driver (IC401)
5 to 8	I/O-MP3-BUS0 I/O-MP3-BUS1 I/O-MP3-BUS2(SO) I/O-MP3-BUS3(SI)	I/O	Two-way data bus for CD-DSP-MP3 decorder (IC101)
9	I-RMC (SRCS)	I	SIRCS remote control signal input
10	LID-OPEN	I	CD lid open detect signal input
11	$\overline{\text{TAPE PLAY}}$	I	Tape PLAY detect signal input
12	TAPE REC	I	Tape REC detect signal input
13	NC(GND)	—	Not used (Fixed to “L”)
14	NC(OPEN)	—	Not used (Open)
15	VCC	—	Power supply terminal (+3.3V)
16	VSS	—	Ground terminal
17	O-MP3-BUCK(CLK)	O	Bus clock signal output to CD-DSP-MP3 decorder (IC101)
18	$\overline{\text{O-MP3-CCEN}}$	O	Chip enable signal output to CD-DSP-MP3 decorder (IC101)
19	$\overline{\text{O-MP3-XRST}}$	O	Reset signal output to CD-DSP-MP3 decorder (IC101)
20	O-PCONT	O	Power control signal output (H:ON)
21	O-P-MUTE	O	Mute signal output to power amplifier
22	O-TU-CE	O	Chip enable signal output to Tuner PLL (IC2)
23	I-TU-DO	I	Serial data input from Tuner PLL (IC2)
24	O-TU-CLK	O	Serial clock signal output to Tuner PLL (IC2)
25	O-TU-DI	O	Serial data output to Tuner PLL (IC2)
26	O-TU-MUTE	O	Mute signal output to Tuner PLL (IC2)
27	$\overline{\text{WOOFER_ON/OFF}}$	O	Woofer control signal output (H:ON/L:OFF)
28	$\overline{\text{WOOFER_1/2}}$	O	Woofer level control signal output (H:Level-2, L:Level-1)
29	$\overline{\text{WOOFER_LED1}}$	O	Woofer LED control signal output (H:Level-1)
30	$\overline{\text{WOOFER_LED2}}$	O	Woofer LED control signal output (H:Level-2)
31	O-A-MUTE	O	Mute signal output
32	AVCC	—	Power supply terminal (+3.3V)
33	O-VOL-DATA	O	Serial data output to EVR (IC321)
34	O-VOL-CLK	O	Serial clock output to EVR (IC321)
35	AVSS	—	Ground terminal
36	I-REG6V-CHK	I	6V regulator check input
37	I-MIC-IN	I	MIC input detect (H:Detect)
38 to 41	I-KEY0-3	I	Key input
42	I-KEY-WAKE-UP	I	Key wake-up input
43	I-MP3-SBSY	I	Sub code block sync input terminal
44	VSS	—	Ground terminal
45	I-AC/DC-CHK	I	AC/DC detect (L:AC)
46	O-BUF-CONT	O	MIC buffer control signal output
47	NC	—	Not used (Open)
48	I-SUFFIX	I	Suffix control input
49	EEPROM-SDA	I/O	Serial data input/output to EEPROM (IC802)
50	EEPROM-SCK	O	Serial clock output to EEPROM (IC802)
51 to 53	MD2-0	I	Flash mask (Fixed to MD2:L, MD1:H, MD0:H)

Pin No.	Pin Name	I/O	Description
54	RSTX	I	System reset signal input
55	O-CD-SW	O	Pre-amp select signal output
56	O-CD	O	CD+3.3V regulator control signal output
57	O-TAPE	O	Pre-amp select signal output
58	VLCD	I	LCD power setting input
59 to 62	COM1-4	O	Common signal output to the LCD
63, 64	SEG1,2	O	Segment signal output to the LCD
65	VCC	—	Power supply terminal (+3.3V)
66	VSS	—	Ground terminal
67 to 89	SEG3-25	O	Segment signal output to the LCD
90	VCC	—	Power supply terminal (+3.3V)
91	VSS	—	Ground terminal
92	X1	O	Main clock output terminal (4.19MHz)
93	X0	I	Main clock input terminal (4.19MHz)
94 to 98	SEG26-30	O	Segment signal output to the LCD
99	NC	—	Not used (Open)
100	NC	—	Not used (Open)

SECTION 8
EXPLODED VIEWS

NOTE:

- -XX and -X mean standardized parts, so they may have some difference from the original one.
- Items marked "*" are not stocked since they are seldom required for routine service. Some delay should be anticipated when ordering these items.
- The mechanical parts with no reference number in the exploded views are not supplied.
- Abbreviation
  AUS : Australian model
  CND : Canadian model
  E41 : AC 230V area in E model
  E92 : AC 120V area in E model
  MX : Mexican model
  SP : Singapore model

The components identified by mark ⚠ or dotted line with mark ⚠ are critical for safety. Replace only with part number specified.

Les composants identifiés par une marque ⚠ sont critiques pour la sécurité. Ne les remplacer que par une pièce portant le numéro spécifié.

8-1. OVERALL SECTION

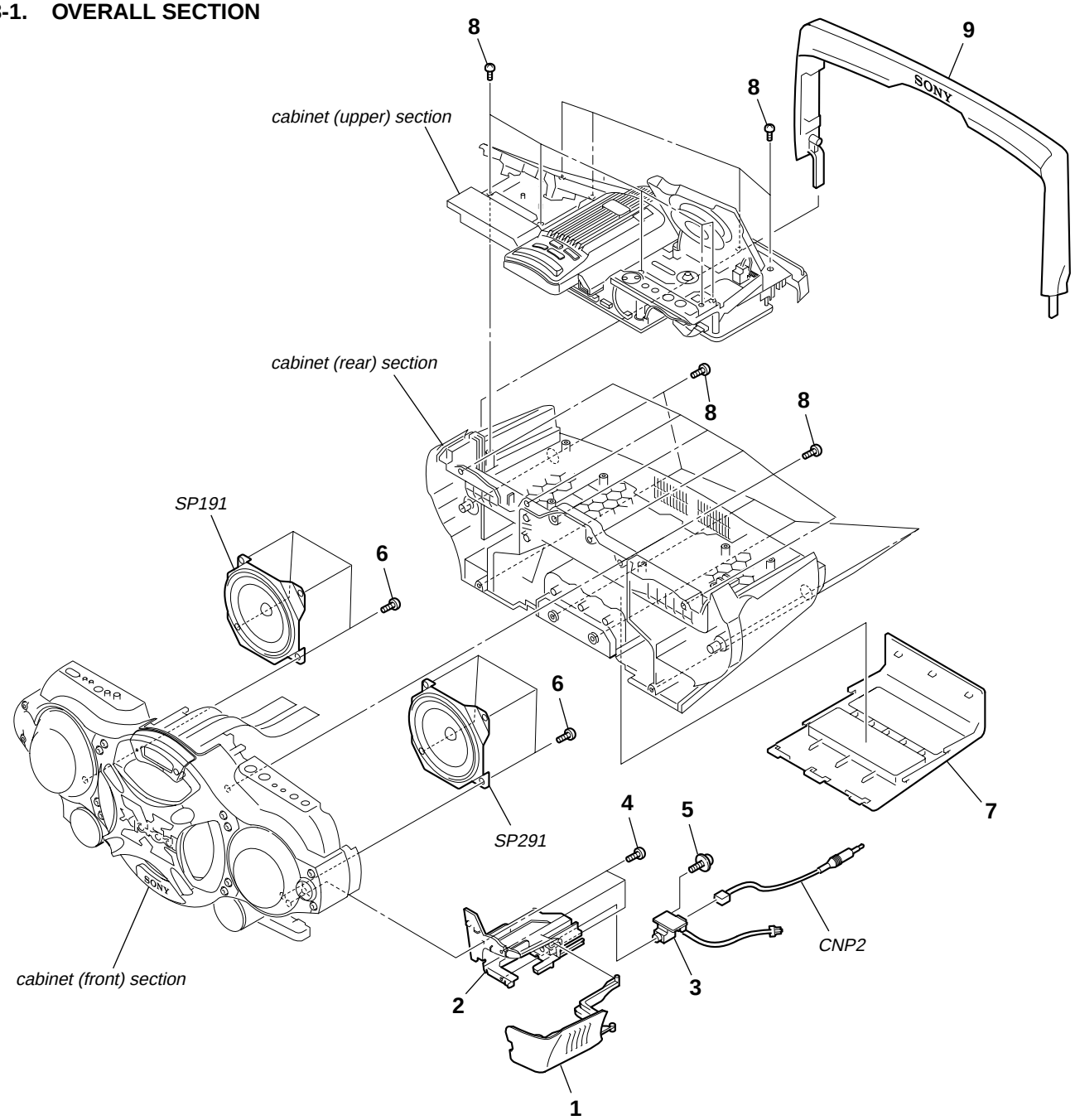

Ref. No.	Part No.	Description	Remark
1	2-895-570-01	LID, CORD CASE	
2	2-895-569-01	CASE, CORD	
3	A-1244-296-A	AUDIO IN BOARD, COMPLETE	
4	3-252-827-01	SCREW (B2.6), (+) BV TAPPING	
5	3-252-828-01	SCREW (B2.6), (+) PWH TAPPING	
6	3-254-143-11	SCREW (B3), (+) BV TAPPING	
7	2-895-573-01	LID, BATTERY	
8	3-254-145-11	SCREW (B3), (+) BV TAPPING	
9	2-895-574-01	HANDLE	
CNP2	1-833-922-11	CORD, CONNECTION (WITH PLUG)	
SP191	1-826-684-11	SPEAKER (10cm)	
SP291	1-826-684-11	SPEAKER (10cm)	

8-2. CABINET (FRONT) SECTION

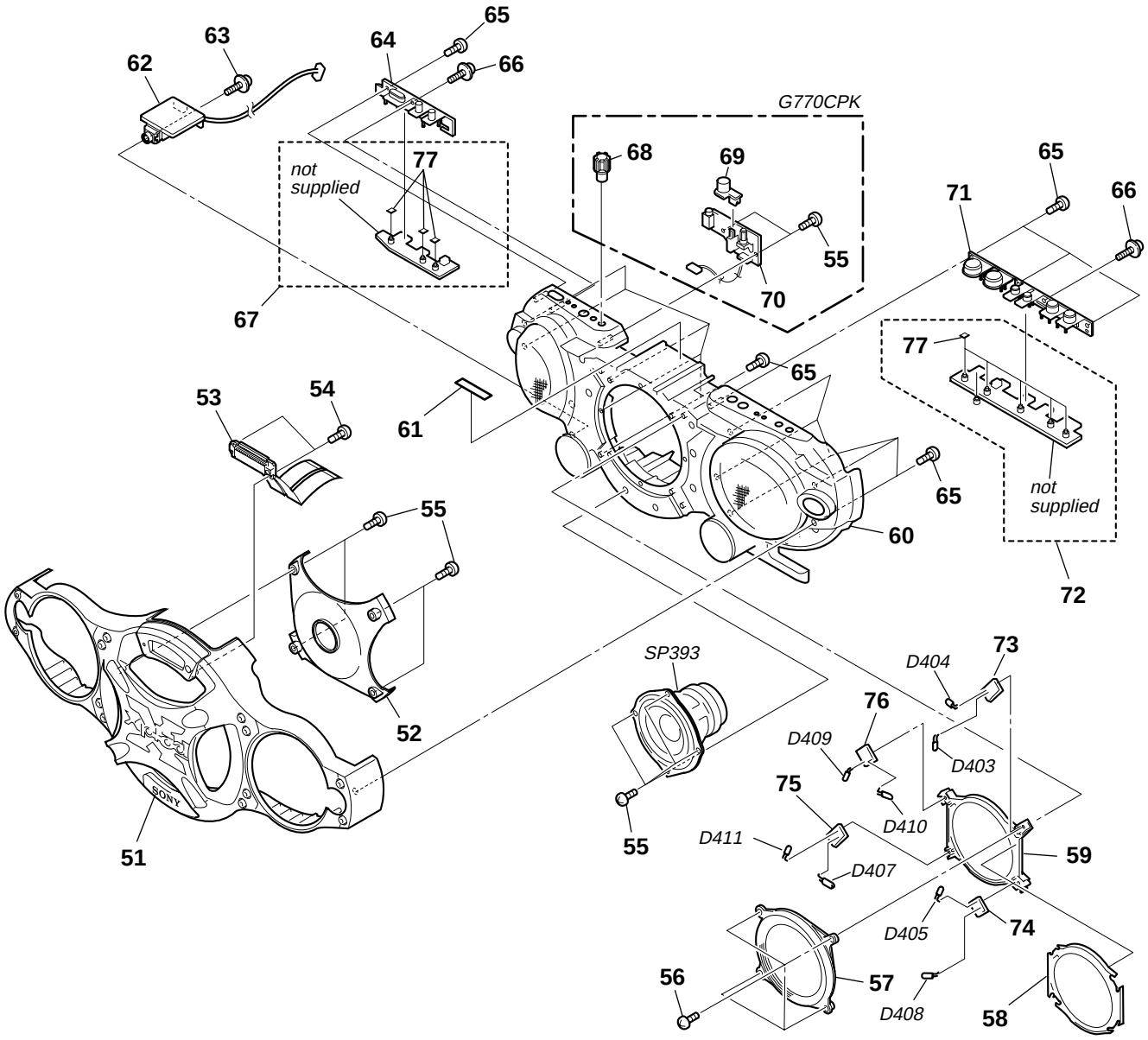

Ref. No.	Part No.	Description	Remark
51	X-2177-000-1	PANEL, (FRONT) SUB ASSY	
52	2-895-583-01	COVER, PANEL	
53	A-1244-292-A	LCD BOARD, COMPLETE	
54	3-254-151-01	SCREW (B2.6), (+) P TAPPING	
55	3-254-143-11	SCREW (B3), (+) BV TAPPING	
56	3-254-140-01	SCREW (B2.6), (+) BV TAPPING	
57	2-895-575-01	RING, ORNAMENTAL	
58	2-895-579-01	HOLDER, RING	
59	2-895-576-01	RING, LIGHT GUIDE	
60	X-2177-001-1	CABINET, (FRONT) SUB ASSY (G770CPK)	
60	X-2177-002-1	CABINET, (FRONT) SUB ASSY (G700CP)	
60	X-2177-003-1	CABINET, (FRONT) SUB ASSY (G770CP)	
61	3-198-121-01	SHEET (WIRE), ADHESIVE	
62	A-1244-297-A	HEADPHONE BOARD, COMPLETE	
63	3-252-830-01	SCREW (B3), (+) PWH TAPPING	
64	2-895-584-01	BUTTON, POWER	
65	3-252-827-01	SCREW (B2.6), (+) BV TAPPINGNG	
66	3-252-828-01	SCREW (B2.6), (+) PWH TAPPING	
67	A-1244-294-A	POWER KEY BOARD, COMPLETE	
68	2-657-081-02	KNOB, MICVOLUM (G770CPK)	

Ref. No.	Part No.	Description	Remark
69	2-895-594-01	CAP, SWITCH (G770CPK)	
70	A-1244-295-A	MICROPHONE BOARD, COMPLETE (G770CPK)	
71	2-895-585-01	BUTTON, TUNE	
72	A-1244-293-A	VOLUME KEY BOARD, COMPLETE	
73	A-1243-618-A	LED1 BOARD, COMPLETE	
74	A-1243-619-A	LED2 BOARD, COMPLETE	
75	A-1243-620-A	LED3 BOARD, COMPLETE	
76	A-1243-621-A	LED4 BOARD, COMPLETE	
77	3-831-441-11	CUSHION (B)	
D403	6-501-452-01	DIODE 1L4345V22DOTDT02 (ILLUMINATION)	
D404	6-501-452-01	DIODE 1L4345V22DOTDT02 (ILLUMINATION)	
D405	6-501-452-01	DIODE 1L4345V22DOTDT02 (ILLUMINATION)	
D407	6-501-452-01	DIODE 1L4345V22DOTDT02 (ILLUMINATION)	
D408	6-501-452-01	DIODE 1L4345V22DOTDT02 (ILLUMINATION)	
D409	6-501-452-01	DIODE 1L4345V22DOTDT02 (ILLUMINATION)	
D410	6-501-452-01	DIODE 1L4345V22DOTDT02 (ILLUMINATION)	
D411	6-501-452-01	DIODE 1L4345V22DOTDT02 (ILLUMINATION)	
SP393	1-826-683-11	SPEAKER (13cm)	

8-3. CABINET (REAR) SECTION

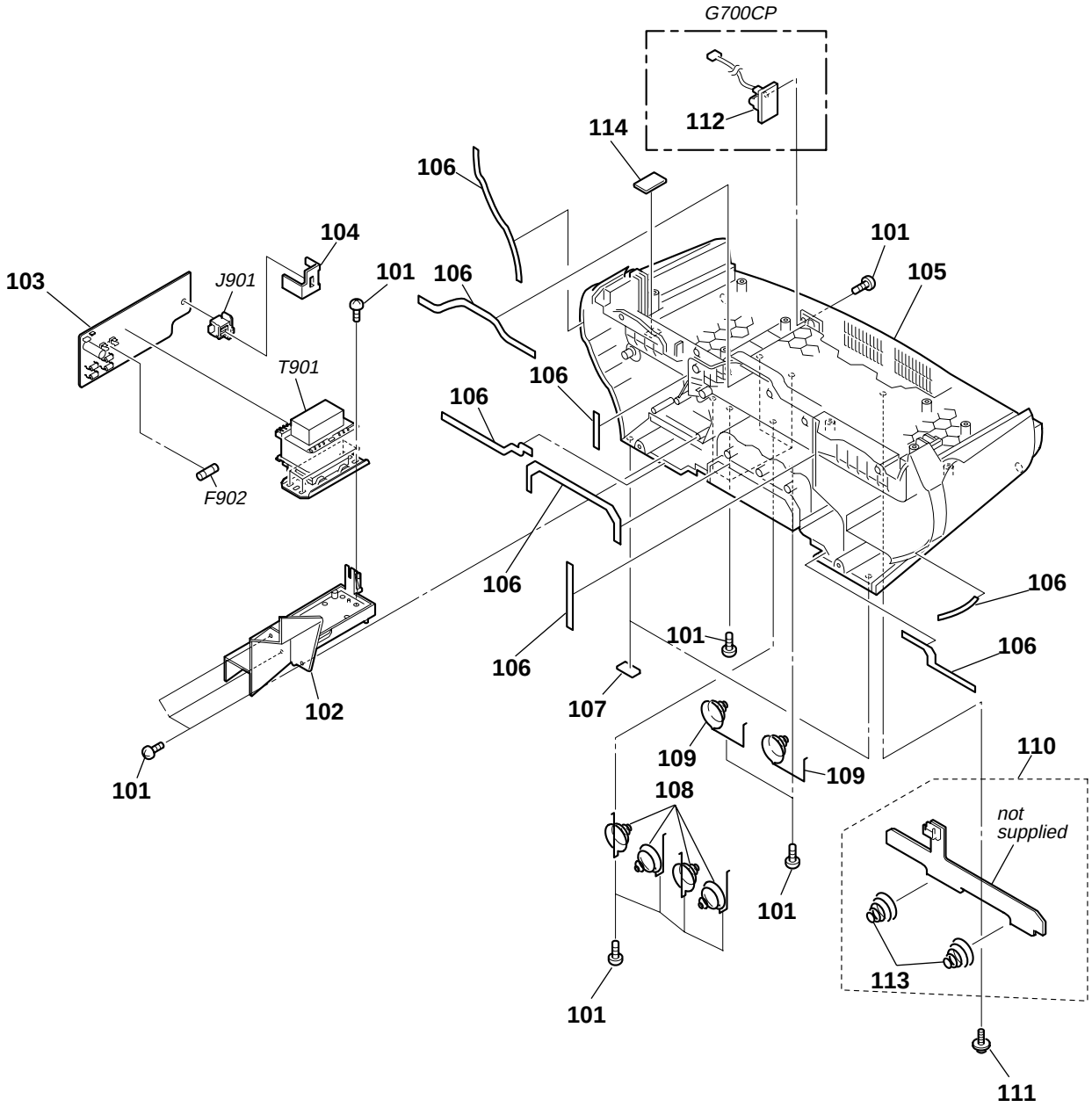

Ref. No.	Part No.	Description	Remark
101	3-254-143-11	SCREW (B3), (+) BV TAPPING	
102	2-895-581-01	HOLDER, TRANSFORMER (G770CP/G770CPK)	
102	2-895-581-11	HOLDER, TRANSFORMER (G700CP)	
103	A-1243-633-A	POWER BOARD, COMPLETE	(US, CND, MX, E92)
103	A-1244-369-A	POWER BOARD, COMPLETE (SP, E41, AUS)	
104	2-895-596-01	BRACKET (TRANSFORMER)	
105	2-895-565-01	CABINET (REAR) (MX)	
105	2-895-565-11	CABINET (REAR) (G700CP)	
105	2-895-565-21	CABINET (REAR) (CND, E92)	
105	2-895-565-31	CABINET (REAR) (SP, E41, AUS)	
106	3-198-219-01	CUSHION, CAP	
107	4-233-372-02	FOOT (FELT)	
108	2-067-415-01	TERMINAL (+, –), BATTERY	
109	2-895-597-01	TERMINAL (–), BATTERY	
110	A-1244-301-A	BATTERY BOARD, COMPLETE	
111	3-252-830-01	SCREW (B3), (+) PWH TAPPING	
112	A-1244-302-A	D-LIGHT BOARD, COMPLETE (G700CP)	
113	3-238-135-01	TERMINAL (–), BATTERY	
114	3-096-719-01	SHEET (REAR)	
⚠F902	1-532-504-33	FUSE (T4AL/250V)	
⚠J901	1-526-838-11	INLET, AC 2P (∼ AC IN) (SP, E41, AUS)	
⚠J901	1-540-009-11	INLET, AC (∼ AC IN) (US, CND, MX, E92)	
⚠T901	1-435-964-12	TRANSFORMER, POWER (US, CND, MX, E92)	
⚠T901	1-435-965-12	TRANSFORMER, POWER (SP, E41, AUS)	

8-4. CABINET (UPPER) SECTION-1

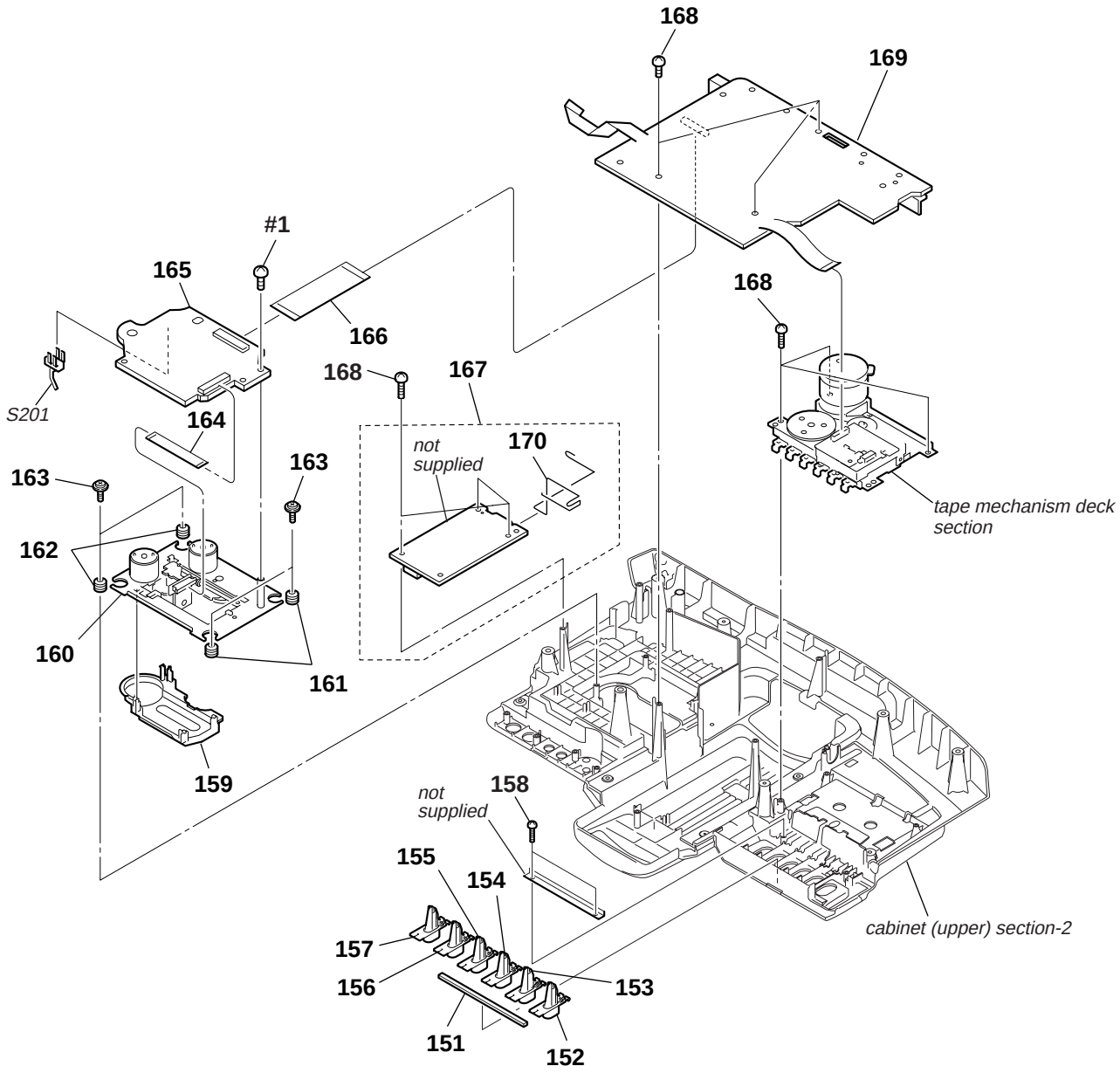

Ref. No.	Part No.	Description	Remark
151	2-108-743-01	CUSHION KEY CASSETTE	
152	2-895-588-01	BUTTON, REC	
153	2-895-589-01	BUTTON, PLAY	
154	2-895-590-01	BUTTON, REW	
155	2-895-591-01	BUTTON, FF	
156	2-895-592-01	BUTTON, STOP	
157	2-895-593-01	BUTTON, PAUSE	
158	3-252-827-01	SCREW (B2.6), (+) BV TAPPING	
159	3-923-736-01	COVER, CD	
⚠160	8-820-126-02	OPTICAL PICK-UP (KSM-213CDP/C2NP)	
161	3-931-379-21	RUBBER, VIBRATION PROOF	
162	3-931-379-31	RUBBER, VIBRATION PROOF	
163	3-252-828-01	SCREW (B2.6), (+) PWH TAPPING	
164	1-832-404-21	CABLE, FLEXIBLE FLAT (16 CORE)	
165	A-1244-423-A	BD90 BOARD, COMPLETE	

Ref. No.	Part No.	Description	Remark
166	1-832-613-21	CABLE, FLEXIBLE FLAT (21 CORE)	
167	A-1244-418-A	TUNER BOARD, COMPLETE	(US, CND, MX, E92)
167	A-1244-419-A	TUNER BOARD, COMPLETE (SP, E41, AUS)	
168	3-254-143-11	SCREW (B3), (+) BV TAPPING	
169	A-1244-300-A	MAIN BOARD, COMPLETE (MX, E92)	
169	A-1244-370-A	MAIN BOARD, COMPLETE (G700CP)	
169	A-1244-371-A	MAIN BOARD, COMPLETE (CND)	
169	A-1244-372-A	MAIN BOARD, COMPLETE (SP)	
169	A-1244-373-A	MAIN BOARD, COMPLETE (E41)	
169	A-1244-374-A	MAIN BOARD, COMPLETE (AUS)	
170	2-895-061-01	TERMINAL, ANTENNA	
S201	1-771-853-11	SWITCH, DETECTION (LIMIT)	
#1	7-685-853-04	SCREW +BVTT 2X6 (S)	

8-5. CABINET (UPPER) SECTION-2

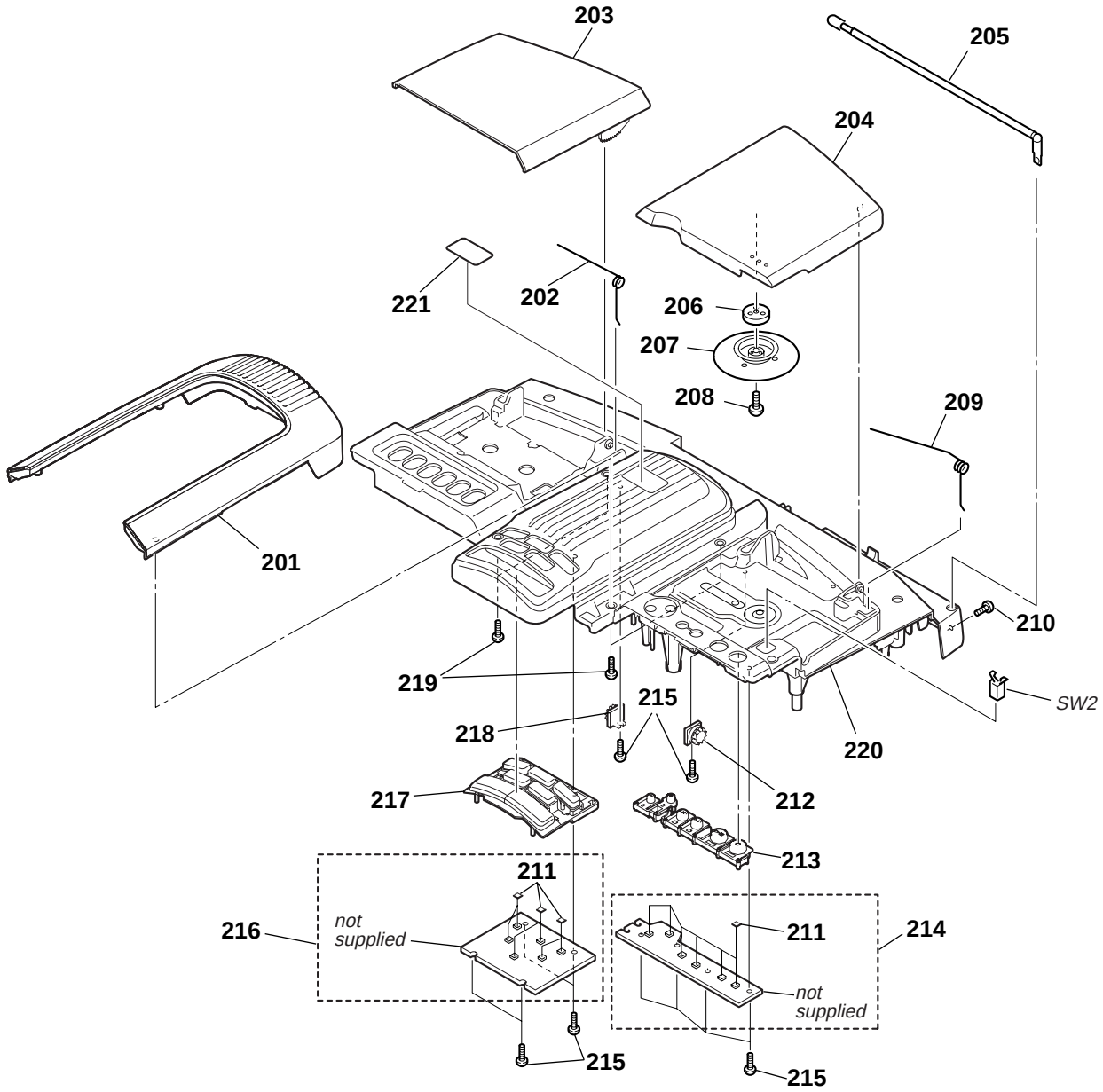

Ref. No.	Part No.	Description	Remark
201	2-895-568-01	PANEL (UPPER) (G770CP/G770CPK)	
201	2-895-568-11	PANEL (UPPER) (G700CP)	
202	2-895-060-01	SPRING, CASSETTE	
203	2-895-572-01	LID, CASSETTE (G770CPK)	
203	2-895-572-11	LID, CASSETTE (G700CP)	
203	2-895-572-21	LID, CASSETTE (G770CP)	
204	2-895-571-01	LID, CD	
205	1-754-376-11	ANTENNA, TELESCOPIC	
206	1-452-899-11	MAGNET	
207	3-019-395-01	PLATE, CHUCKING	
208	3-253-143-01	SCREW (B2.6), (+) P TAPPING	
209	2-895-059-01	SPRING, CD	
210	3-252-833-01	SCREW (M3), (+) P	
211	3-831-441-11	CUSHION (B)	
212	3-047-468-21	DAMPER	
213	2-895-586-01	BUTTON, CD	
214	A-1244-299-A	CD KEY BOARD, COMPLETE	
215	3-252-827-01	SCREW (B2.6), (+) BV TAPPING	
216	A-1244-298-A	WOOFER KEY BOARD, COMPLETE	
217	2-895-587-01	BUTTON, SOUND	
218	3-047-468-01	DAMPER	
219	3-254-143-11	SCREW (B3), (+) BV TAPPING	
220	2-895-566-01	CABINET (UPPER) (G770CP/G770CPK)	
220	2-895-566-11	CABINET (UPPER) (G700CP)	
221	2-895-760-01	SHEET (X PLOD)	
SW2	1-692-960-11	SWITCH, PUSH (1 KEY) (⏏ PUSH OPEN/CLOSE)	

8-6. TAPE MECHANISM DECK SECTION

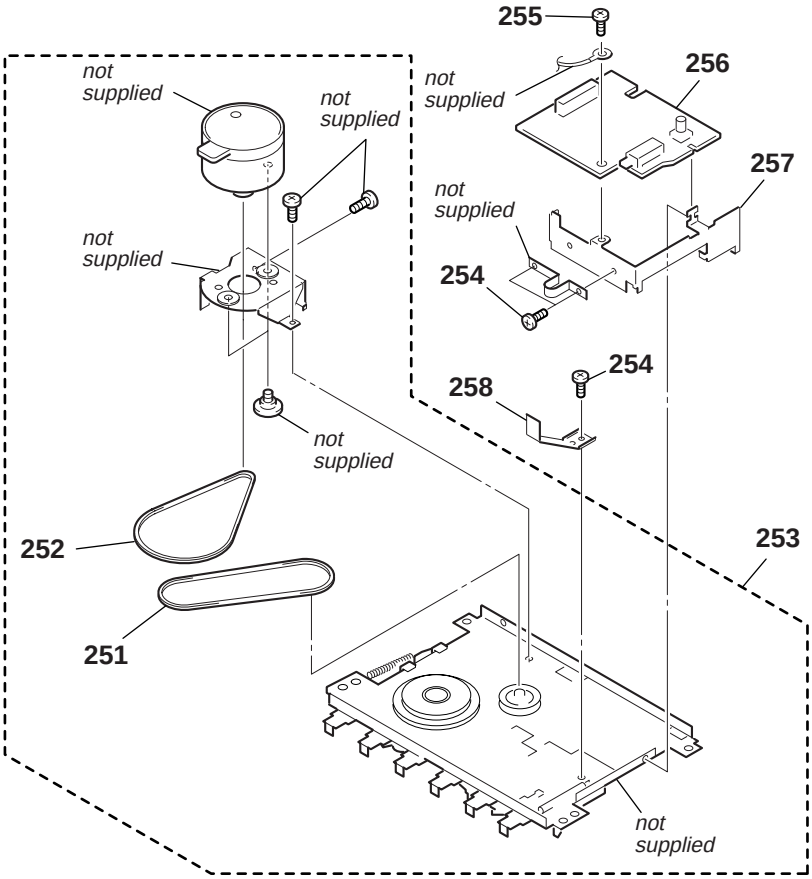

Ref. No.	Part No.	Description	Remark
251	2-670-389-01	BELT (1)	
252	2-670-390-01	BELT (2)	
253	1-797-375-11	DECK, MECHANICAL (H21SB-C05)	
254	3-254-029-01	SCREW	
255	3-254-022-01	SCREW	
256	A-1246-280-A	TC BOARD, COMPLETE	
257	2-659-455-01	HOLDER (REC)	
258	3-252-612-01	LEVER, REC	

SECTION 9
ELECTRICAL PARTS LIST

AUDIO IN | BATTERY | BD90

NOTE:

- Due to standardization, replacements in the parts list may be different from the parts specified in the diagrams or the components used on the set.
- -XX and -X mean standardized parts, so they may have some difference from the original one.
- Items marked "*" are not stocked since they are seldom required for routine service. Some delay should be anticipated when ordering these items.
- Accessories are given in the last of this parts list.
- CAPACITORS
  uF: µF
- COILS
  uH: µH
- RESISTORS
  All resistors are in ohms.
  METAL: Metal-film resistor.
  METAL OXIDE: Metal oxide-film resistor.
  F: nonflammable
- SEMICONDUCTORS
  In each case, u: µ, for example:
  uA. . : µA. . uPA. . : µPA. .
  uPB. . : µPB. . uPC. . : µPC. .
  uPD. . : µPD. .
- Abbreviation
  AUS : Australian model
  CND : Canadian model
  E41 : AC 230V area in E model
  E92 : AC 120V area in E model
  MX : Mexican model
  SP : Singapore model

When indicating parts by reference number, please include the board name.

The components identified by mark ⚠ or dotted line with mark ⚠ are critical for safety. Replace only with part number specified.

Les composants identifiés par une marque ⚠ sont critiques pour la sécurité.
Ne les remplacer que par une pièce portant le numéro spécifié.

Ref. No.	Part No.	Description			Remark
	A-1244-296-A	AUDIO IN BOARD, COMPLETE			
		**********			
		< CONNECTOR >			
CNP357	1-815-551-11	PIN, CONNECTOR (PWB) 3P			
		< JACK >			
J402	1-815-629-11	JACK (AUDIO IN)			
		< JUMPER RESISTOR >			
JR205	1-216-864-11	SHORT CHIP	0		
JR206	1-216-864-11	SHORT CHIP	0		
		< COIL >			
L101	1-410-517-11	INDUCTOR	47uH		
L102	1-410-517-11	INDUCTOR	47uH		
L202	1-410-517-11	INDUCTOR	47uH		
		< RESISTOR >			
R121	1-216-837-11	METAL CHIP	22K	5%	1/10W
R122	1-216-837-11	METAL CHIP	22K	5%	1/10W
R221	1-216-837-11	METAL CHIP	22K	5%	1/10W
R222	1-216-837-11	METAL CHIP	22K	5%	1/10W
**********					
	A-1244-301-A	BATTERY BOARD, COMPLETE			
		**********			
	3-238-135-01	TERMINAL (–), BATTERY			
		< CONNECTOR >			
CNP941	1-815-552-11	PIN, CONNECTOR (PWB) 4P			
**********					
	A-1244-423-A	BD90 BOARD, COMPLETE			
		**********			
		< CAPACITOR >			
C100	1-164-360-11	CERAMIC CHIP	0.1uF		16V
C101	1-164-360-11	CERAMIC CHIP	0.1uF		16V
C102	1-164-360-11	CERAMIC CHIP	0.1uF		16V
C103	1-164-360-11	CERAMIC CHIP	0.1uF		16V
C104	1-164-360-11	CERAMIC CHIP	0.1uF		16V
C105	1-164-360-11	CERAMIC CHIP	0.1uF		16V
C106	1-128-995-21	ELECT CHIP	100uF	20%	10V
C107	1-164-360-11	CERAMIC CHIP	0.1uF		16V
C108	1-164-360-11	CERAMIC CHIP	0.1uF		16V
C109	1-164-360-11	CERAMIC CHIP	0.1uF		16V
C110	1-164-360-11	CERAMIC CHIP	0.1uF		16V
C112	1-164-360-11	CERAMIC CHIP	0.1uF		16V
C113	1-164-360-11	CERAMIC CHIP	0.1uF		16V
C115	1-124-778-00	ELECT CHIP	22uF	20%	6.3V
C116	1-164-360-11	CERAMIC CHIP	0.1uF		16V
C117	1-164-227-11	CERAMIC CHIP	0.022uF	10%	25V
C118	1-162-970-11	CERAMIC CHIP	0.01uF	10%	25V
C119	1-164-227-11	CERAMIC CHIP	0.022uF	10%	25V
C120	1-162-970-11	CERAMIC CHIP	0.01uF	10%	25V
C122	1-164-315-11	CERAMIC CHIP	470PF	5%	50V
C123	1-164-315-11	CERAMIC CHIP	470PF	5%	50V
C124	1-162-968-11	CERAMIC CHIP	0.0047uF	10%	50V
C125	1-162-968-11	CERAMIC CHIP	0.0047uF	10%	50V
C126	1-107-826-11	CERAMIC CHIP	0.1uF	10%	16V
C127	1-162-966-11	CERAMIC CHIP	0.0022uF	10%	50V
C128	1-162-910-11	CERAMIC CHIP	5PF	0.25PF	50V
C130	1-162-910-11	CERAMIC CHIP	5PF	0.25PF	50V
C132	1-164-360-11	CERAMIC CHIP	0.1uF		16V
C133	1-107-826-11	CERAMIC CHIP	0.1uF	10%	16V
C136	1-162-923-11	CERAMIC CHIP	47PF	5%	50V
C137	1-162-970-11	CERAMIC CHIP	0.01uF	10%	25V
C138	1-164-315-11	CERAMIC CHIP	470PF	5%	50V
C139	1-162-970-11	CERAMIC CHIP	0.01uF	10%	25V
C140	1-162-970-11	CERAMIC CHIP	0.01uF	10%	25V
C141	1-162-966-11	CERAMIC CHIP	0.0022uF	10%	50V
C142	1-107-826-11	CERAMIC CHIP	0.1uF	10%	16V
C143	1-162-970-11	CERAMIC CHIP	0.01uF	10%	25V
C144	1-107-826-11	CERAMIC CHIP	0.1uF	10%	16V
C145	1-162-970-11	CERAMIC CHIP	0.01uF	10%	25V
C146	1-164-315-11	CERAMIC CHIP	470PF	5%	50V
C147	1-107-826-11	CERAMIC CHIP	0.1uF	10%	16V
C148	1-162-923-11	CERAMIC CHIP	47PF	5%	50V
C149	1-162-919-11	CERAMIC CHIP	22PF	5%	50V
C150	1-162-964-11	CERAMIC CHIP	0.001uF	10%	50V
C151	1-164-315-11	CERAMIC CHIP	470PF	5%	50V
C152	1-164-315-11	CERAMIC CHIP	470PF	5%	50V
C153	1-164-360-11	CERAMIC CHIP	0.1uF		16V
C201	1-128-995-21	ELECT CHIP	100uF	20%	10V

BD90 **CD KEY**

Ref. No.	Part No.	Description			Remark
C202	1-128-995-21	ELECT CHIP	100uF	20%	10V
C204	1-164-360-11	CERAMIC CHIP	0.1uF		16V
C205	1-164-360-11	CERAMIC CHIP	0.1uF		16V
C206	1-165-908-11	CERAMIC CHIP	1uF	10%	10V
C207	1-165-908-11	CERAMIC CHIP	1uF	10%	10V
C301	1-164-360-11	CERAMIC CHIP	0.1uF		16V
C302	1-137-710-91	CERAMIC CHIP	10uF	20%	6.3V
C303	1-137-710-91	CERAMIC CHIP	10uF	20%	6.3V
C306	1-128-995-21	ELECT CHIP	100uF	20%	10V
C307	1-165-908-11	CERAMIC CHIP	1uF	10%	10V
C309	1-162-964-11	CERAMIC CHIP	0.001uF	10%	50V
C401	1-128-394-11	ELECT CHIP	220uF	20%	10V
C403	1-164-360-11	CERAMIC CHIP	0.1uF		16V
C404	1-164-360-11	CERAMIC CHIP	0.1uF		16V
C405	1-164-360-11	CERAMIC CHIP	0.1uF		16V
		< CONNECTOR >			
CN201	1-784-833-51	CONNECTOR, FFC (LIF (NON-ZIF)) 21P			
CN301	1-770-425-51	CONNECTOR, FFC/FPC 16P			
		< IC >			
IC101	(Not supplied)	IC TC94A70FG-006			
IC201	6-710-808-01	IC TK63115SCL-G@GT			
IC401	6-710-637-01	IC BA5826SFP-E2			
		< TRANSISTOR >			
Q301	6-551-120-01	TRANSISTOR	2SA2119K		
		< RESISTOR >			
R101	1-216-813-11	METAL CHIP	220	5%	1/10W
R102	1-216-833-11	METAL CHIP	10K	5%	1/10W
R104	1-216-295-91	SHORT CHIP	0		
R105	1-216-857-11	METAL CHIP	1M	5%	1/10W
R106	1-216-821-11	METAL CHIP	1K	5%	1/10W
R108	1-216-864-11	SHORT CHIP	0		
R110	1-216-833-11	METAL CHIP	10K	5%	1/10W
R111	1-216-809-11	METAL CHIP	100	5%	1/10W
R112	1-216-809-11	METAL CHIP	100	5%	1/10W
R113	1-216-833-11	METAL CHIP	10K	5%	1/10W
R114	1-216-833-11	METAL CHIP	10K	5%	1/10W
R118	1-216-845-11	METAL CHIP	100K	5%	1/10W
R120	1-216-864-11	SHORT CHIP	0		
R125	1-216-864-11	SHORT CHIP	0		
R126	1-216-864-11	SHORT CHIP	0		
R127	1-216-864-11	SHORT CHIP	0		
R128	1-216-853-11	METAL CHIP	470K	5%	1/10W
R129	1-216-821-11	METAL CHIP	1K	5%	1/10W
R130	1-216-829-11	METAL CHIP	4.7K	5%	1/10W
R134	1-216-857-11	METAL CHIP	1M	5%	1/10W
R135	1-216-853-11	METAL CHIP	470K	5%	1/10W
R136	1-216-837-11	METAL CHIP	22K	5%	1/10W
R139	1-216-841-11	METAL CHIP	47K	5%	1/10W
R140	1-216-864-11	SHORT CHIP	0		
R142	1-216-837-11	METAL CHIP	22K	5%	1/10W
R143	1-216-841-11	METAL CHIP	47K	5%	1/10W
R144	1-216-837-11	METAL CHIP	22K	5%	1/10W
R145	1-216-864-11	SHORT CHIP	0		
R146	1-216-864-11	SHORT CHIP	0		
R147	1-216-864-11	SHORT CHIP	0		
R148	1-216-864-11	SHORT CHIP	0		
R149	1-216-864-11	SHORT CHIP	0		
R150	1-216-864-11	SHORT CHIP	0		
R151	1-216-864-11	SHORT CHIP	0		
R153	1-216-857-11	METAL CHIP	1M	5%	1/10W
R154	1-216-857-11	METAL CHIP	1M	5%	1/10W
R155	1-216-805-11	METAL CHIP	47	5%	1/10W
R156	1-216-809-11	METAL CHIP	100	5%	1/10W
R157	1-216-809-11	METAL CHIP	100	5%	1/10W
R201	1-216-295-91	SHORT CHIP	0		
R202	1-216-295-91	SHORT CHIP	0		
R203	1-216-809-11	METAL CHIP	100	5%	1/10W
R204	1-216-809-11	METAL CHIP	100	5%	1/10W
R205	1-216-809-11	METAL CHIP	100	5%	1/10W
R206	1-216-809-11	METAL CHIP	100	5%	1/10W
R207	1-216-809-11	METAL CHIP	100	5%	1/10W
R208	1-216-809-11	METAL CHIP	100	5%	1/10W
R209	1-216-809-11	METAL CHIP	100	5%	1/10W
R210	1-216-809-11	METAL CHIP	100	5%	1/10W
R211	1-216-809-11	METAL CHIP	100	5%	1/10W
R212	1-216-809-11	METAL CHIP	100	5%	1/10W
R218	1-216-845-11	METAL CHIP	100K	5%	1/10W
R219	1-216-845-11	METAL CHIP	100K	5%	1/10W
R220	1-216-845-11	METAL CHIP	100K	5%	1/10W
R221	1-216-845-11	METAL CHIP	100K	5%	1/10W
R222	1-216-845-11	METAL CHIP	100K	5%	1/10W
R223	1-216-845-11	METAL CHIP	100K	5%	1/10W
R301	1-216-845-11	METAL CHIP	100K	5%	1/10W
R302	1-216-864-11	SHORT CHIP	0		
R303	1-216-789-11	METAL CHIP	2.2	5%	1/10W
R304	1-216-789-11	METAL CHIP	2.2	5%	1/10W
R402	1-216-825-11	METAL CHIP	2.2K	5%	1/10W
R405	1-216-833-11	METAL CHIP	10K	5%	1/10W
R408	1-216-825-11	METAL CHIP	2.2K	5%	1/10W
R414	1-216-829-11	METAL CHIP	4.7K	5%	1/10W
R415	1-216-841-11	METAL CHIP	47K	5%	1/10W
		< VIBRATOR >			
X102	1-795-101-21	VIBRATOR, CERAMIC (16.934MHz)			

****

	A-1244-299-A	CD KEY BOARD, COMPLETE			
		**********			
	3-831-441-11	CUSHION (B)			
		< RESISTOR >			
R404	1-216-821-11	METAL CHIP	1K	5%	1/10W
R405	1-216-825-11	METAL CHIP	2.2K	5%	1/10W
R406	1-216-821-11	METAL CHIP	1K	5%	1/10W
R407	1-216-825-11	METAL CHIP	2.2K	5%	1/10W
R410	1-216-813-11	METAL CHIP	220	5%	1/10W
R421	1-216-817-11	METAL CHIP	470	5%	1/10W
R422	1-216-821-11	METAL CHIP	1K	5%	1/10W
R466	1-216-809-11	METAL CHIP	100	5%	1/10W

CD KEY | D-LIGHT | HEADPHONE | LCD
LED1 | LED2 | LED3 | LED4 | MAIN

Ref. No.	Part No.	Description			Remark
		< SWITCH >			
S401	1-786-050-21	SWITCH, KEY BOARD (TUNE –/🗀–)			
S402	1-786-050-21	SWITCH, KEY BOARD (TUNE +/🗀+)			
S405	1-786-050-21	SWITCH, KEY BOARD (▶II)			
S406	1-786-050-21	SWITCH, KEY BOARD (■)			
S413	1-786-050-21	SWITCH, KEY BOARD (PRESET – I◀◀)			
S414	1-786-050-21	SWITCH, KEY BOARD (PRESET + ▶▶I)			
**********					
	A-1244-302-A	D-LIGHT BOARD, COMPLETE (G700CP)			
		**********			
		< JACK >			
J103	1-820-048-11	CONNECTOR (LIGHTING) (D-LIGHT SYNC OUT)			
		< RESISTOR >			
L302	1-216-864-11	SHORT CHIP	0		
L306	1-216-864-11	SHORT CHIP	0		
L307	1-216-864-11	SHORT CHIP	0		
**********					
	A-1244-297-A	HEADPHONE BOARD, COMPLETE			
		**********			
		< CONNECTOR >			
CNP392	1-815-552-11	PIN, CONNECTOR (PWB) 4P			
		< JACK >			
J391	1-794-016-11	JACK (🎧)			
		< COIL >			
L301	1-410-509-11	INDUCTOR	10uH		
		< RESISTOR >			
R192	1-216-821-11	METAL CHIP	1K	5%	1/10W
R193	1-216-813-11	METAL CHIP	220	5%	1/10W
R194	1-216-813-11	METAL CHIP	220	5%	1/10W
R292	1-216-821-11	METAL CHIP	1K	5%	1/10W
R293	1-216-813-11	METAL CHIP	220	5%	1/10W
R294	1-216-813-11	METAL CHIP	220	5%	1/10W
**********					
	A-1244-292-A	LCD BOARD, COMPLETE			
		**********			
	1-831-799-21	CABLE, FLEXIBLE FLAT (19 CORE)			
	2-895-582-01	HOLDER, LCD			
	3-198-120-01	SHEET (IR), ADHESIVE			
		< CAPACITOR >			
C401	1-115-156-11	CERAMIC CHIP	1uF		10V
		< DIODE >			
D406	8-719-059-97	DIODE L-34HD (OPR/BATT)			
		< IC >			
IC891	6-701-681-01	IC RPM7140-V4			

Ref. No.	Part No.	Description			Remark
		< LIQUID CRYSTAL DISPLAY >			
LCD401	1-802-396-11	DISPLAY PANEL, LIQUID CRYSTAL			
		< RESISTOR >			
R428	1-216-813-11	METAL CHIP	220	5%	1/10W
R469	1-216-845-11	METAL CHIP	100K	5%	1/10W
R475	1-216-849-11	METAL CHIP	220K	5%	1/10W
**********					
	A-1243-618-A	LED1 BOARD, COMPLETE			
		**********			
		< RESISTOR >			
R471	1-216-813-11	METAL CHIP	220	5%	1/10W
R472	1-216-813-11	METAL CHIP	220	5%	1/10W
**********					
	A-1243-619-A	LED2 BOARD, COMPLETE			
		**********			
		< RESISTOR >			
R449	1-216-813-11	METAL CHIP	220	5%	1/10W
R450	1-216-813-11	METAL CHIP	220	5%	1/10W
**********					
	A-1243-620-A	LED3 BOARD, COMPLETE			
		**********			
		< RESISTOR >			
R476	1-216-813-11	METAL CHIP	220	5%	1/10W
R487	1-216-813-11	METAL CHIP	220	5%	1/10W
**********					
	A-1243-621-A	LED4 BOARD, COMPLETE			
		**********			
		< RESISTOR >			
R478	1-216-813-11	METAL CHIP	220	5%	1/10W
R479	1-216-813-11	METAL CHIP	220	5%	1/10W
**********					
	A-1244-300-A	MAIN BOARD, COMPLETE (MX, E92)			
	A-1244-370-A	MAIN BOARD, COMPLETE (G700CP)			
	A-1244-371-A	MAIN BOARD, COMPLETE (CND)			
	A-1244-372-A	MAIN BOARD, COMPLETE (SP)			
	A-1244-373-A	MAIN BOARD, COMPLETE (E41)			
	A-1244-374-A	MAIN BOARD, COMPLETE (AUS)			
		**********			
	1-832-425-21	CABLE, FLEXIBLE FLAT (11 CORE)			
	1-833-945-21	CABLE, FLEXIBLE FLAT (11 CORE)			
	3-252-827-01	SCREW (B2.6), (+) BV TAPPING			
		< CAPACITOR >			
C106	1-107-826-11	CERAMIC CHIP	0.1uF	10%	16V
C107	1-107-826-11	CERAMIC CHIP	0.1uF	10%	16V
C108	1-165-176-11	CERAMIC CHIP	0.047uF	10%	16V
C109	1-165-176-11	CERAMIC CHIP	0.047uF	10%	16V
C110	1-162-968-11	CERAMIC CHIP	0.0047uF	10%	50V
C111	1-162-966-11	CERAMIC CHIP	0.0022uF	10%	50V
C121	1-126-960-11	ELECT	1uF	20%	50V

MAIN

Ref. No.	Part No.	Description			Remark
C123	1-126-961-11	ELECT	2.2uF	20%	50V
C124	1-162-927-11	CERAMIC CHIP	100PF	5%	50V
C125	1-126-963-11	ELECT	4.7uF	20%	50V
C126	1-126-961-11	ELECT	2.2uF	20%	50V
C127	1-126-960-11	ELECT	1uF	20%	50V
C131	1-126-959-11	ELECT	0.47uF	20%	50V
C132	1-162-927-11	CERAMIC CHIP	100PF	5%	50V
C151	1-126-964-11	ELECT	10uF	20%	50V (G770CPK)
C152	1-126-960-11	ELECT	1uF	20%	50V (G770CPK)
C153	1-126-960-11	ELECT	1uF	20%	50V (MX, E92, AUS)
C153	1-126-964-11	ELECT	10uF	20%	50V (CND)
C154	1-162-960-11	CERAMIC CHIP	220PF	10%	50V (G770CPK)
C161	1-126-960-11	ELECT	1uF	20%	50V
C171	1-126-947-11	ELECT	47uF	20%	35V
C172	1-162-962-11	CERAMIC CHIP	470PF	10%	50V
C173	1-104-658-91	ELECT	100uF	20%	10V
C174	1-126-926-11	ELECT	1000uF	20%	10V
C175	1-164-156-11	CERAMIC CHIP	0.1uF		25V
C206	1-107-826-11	CERAMIC CHIP	0.1uF	10%	16V
C207	1-107-826-11	CERAMIC CHIP	0.1uF	10%	16V
C208	1-165-176-11	CERAMIC CHIP	0.047uF	10%	16V
C209	1-165-176-11	CERAMIC CHIP	0.047uF	10%	16V
C210	1-162-968-11	CERAMIC CHIP	0.0047uF	10%	50V
C211	1-162-966-11	CERAMIC CHIP	0.0022uF	10%	50V
C221	1-126-960-11	ELECT	1uF	20%	50V
C223	1-126-961-11	ELECT	2.2uF	20%	50V
C224	1-162-927-11	CERAMIC CHIP	100PF	5%	50V
C225	1-126-963-11	ELECT	4.7uF	20%	50V
C226	1-126-961-11	ELECT	2.2uF	20%	50V
C227	1-126-960-11	ELECT	1uF	20%	50V
C231	1-126-959-11	ELECT	0.47uF	20%	50V
C232	1-162-927-11	CERAMIC CHIP	100PF	5%	50V
C251	1-126-964-11	ELECT	10uF	20%	50V (G770CPK)
C252	1-126-960-11	ELECT	1uF	20%	50V (G770CPK)
C253	1-126-960-11	ELECT	1uF	20%	50V (MX, E92, AUS)
C253	1-126-964-11	ELECT	10uF	20%	50V (CND)
C254	1-162-960-11	CERAMIC CHIP	220PF	10%	50V (G770CPK)
C261	1-126-960-11	ELECT	1uF	20%	50V
C271	1-126-947-11	ELECT	47uF	20%	35V
C272	1-162-962-11	CERAMIC CHIP	470PF	10%	50V
C273	1-104-658-91	ELECT	100uF	20%	10V
C274	1-126-926-11	ELECT	1000uF	20%	10V
C275	1-164-156-11	CERAMIC CHIP	0.1uF		25V
C301	1-126-923-91	ELECT	220uF	20%	10V (G770CPK)
C302	1-115-156-11	CERAMIC CHIP	1uF		10V
C303	1-126-964-11	ELECT	10uF	20%	50V
C304	1-107-826-11	CERAMIC CHIP	0.1uF	10%	16V
C305	1-126-935-11	ELECT	470uF	20%	16V

Ref. No.	Part No.	Description			Remark
C326	1-165-176-11	CERAMIC CHIP	0.047uF	10%	16V
C327	1-164-227-11	CERAMIC CHIP	0.022uF	10%	25V
C332	1-126-960-11	ELECT	1uF	20%	50V (G700CP)
C333	1-162-970-11	CERAMIC CHIP	0.01uF	10%	25V
C334	1-164-227-11	CERAMIC CHIP	0.022uF	10%	25V
C335	1-126-960-11	ELECT	1uF	20%	50V
C336	1-126-923-91	ELECT	220uF	20%	10V
C337	1-126-960-11	ELECT	1uF	20%	50V (G700CP)
C338	1-126-964-11	ELECT	10uF	20%	50V
C339	1-104-658-91	ELECT	100uF	20%	10V
C340	1-104-658-91	ELECT	100uF	20%	10V
C341	1-104-662-91	ELECT	22uF	20%	25V
C342	1-162-927-11	CERAMIC CHIP	100PF	5%	50V
C343	1-126-964-11	ELECT	10uF	20%	50V
C344	1-126-964-11	ELECT	10uF	20%	50V (G700CP)
C345	1-126-964-11	ELECT	10uF	20%	50V
C346	1-126-942-61	ELECT	1000uF	20%	25V
C347	1-126-964-11	ELECT	10uF	20%	50V
C348	1-126-946-11	ELECT	6800uF	20%	25V
C349	1-104-666-11	ELECT	220uF	20%	25V
C350	1-162-995-11	CERAMIC CHIP	0.022uF		50V
C351	1-104-658-91	ELECT	100uF	20%	10V
C352	1-107-826-11	CERAMIC CHIP	0.1uF	10%	16V
C353	1-104-658-91	ELECT	100uF	20%	10V
C354	1-104-658-91	ELECT	100uF	20%	10V
C355	1-104-658-91	ELECT	100uF	20%	10V
C356	1-104-658-91	ELECT	100uF	20%	10V
C357	1-164-156-11	CERAMIC CHIP	0.1uF		25V
C358	1-164-156-11	CERAMIC CHIP	0.1uF		25V
C359	1-104-662-91	ELECT	22uF	20%	25V
C360	1-126-961-11	ELECT	2.2uF	20%	50V
C361	1-162-970-11	CERAMIC CHIP	0.01uF	10%	25V
C362	1-126-964-11	ELECT	10uF	20%	50V
C366	1-162-927-11	CERAMIC CHIP	100PF	5%	50V
C371	1-104-658-91	ELECT	100uF	20%	10V
C380	1-126-923-91	ELECT	220uF	20%	10V
C381	1-104-658-91	ELECT	100uF	20%	10V (G700CP)
C402	1-126-960-11	ELECT	1uF	20%	50V (G770CPK)
C411	1-162-927-11	CERAMIC CHIP	100PF	5%	50V
C415	1-164-227-11	CERAMIC CHIP	0.022uF	10%	25V (G770CPK)
C416	1-104-658-91	ELECT	100uF	20%	10V (G770CPK)
C417	1-126-963-11	ELECT	4.7uF	20%	50V (G770CPK)
C418	1-126-963-11	ELECT	4.7uF	20%	50V (G770CPK)
C419	1-104-658-91	ELECT	100uF	20%	10V (G770CPK)
C420	1-126-947-11	ELECT	47uF	20%	35V (G770CPK)
C421	1-126-960-11	ELECT	1uF	20%	50V (G770CPK)
C422	1-126-947-11	ELECT	47uF	20%	35V (G770CPK)

MAIN

Ref. No.	Part No.	Description			Remark
C423	1-104-662-91	ELECT	22uF	20%	25V (G770CPK)
C424	1-126-964-11	ELECT	10uF	20%	50V (G770CPK)
C425	1-127-715-91	CERAMIC CHIP	0.22uF	10%	16V (G770CPK)
C426	1-127-715-91	CERAMIC CHIP	0.22uF	10%	16V (G770CPK)
C427	1-126-963-11	ELECT	4.7uF	20%	50V (G770CPK)
C430	1-115-156-11	CERAMIC CHIP	1uF		10V
C431	1-162-927-11	CERAMIC CHIP	100PF	5%	50V (G770CPK)
C432	1-162-927-11	CERAMIC CHIP	100PF	5%	50V (G770CPK)
C433	1-162-927-11	CERAMIC CHIP	100PF	5%	50V (G770CPK)
C436	1-164-156-11	CERAMIC CHIP	0.1uF		25V
C437	1-100-591-91	CERAMIC CHIP	1uF	10%	25V
C451	1-162-913-11	CERAMIC CHIP	8PF	0.5PF	50V
C453	1-162-919-11	CERAMIC CHIP	22PF	5%	50V
C454	1-162-923-11	CERAMIC CHIP	47PF	5%	50V
C455	1-162-923-11	CERAMIC CHIP	47PF	5%	50V
C456	1-162-919-11	CERAMIC CHIP	22PF	5%	50V
C457	1-162-970-11	CERAMIC CHIP	0.01uF	10%	25V
C458	1-162-970-11	CERAMIC CHIP	0.01uF	10%	25V
C459	1-162-915-11	CERAMIC CHIP	10PF	0.5PF	50V
C461	1-126-964-11	ELECT	10uF	20%	50V
C803	1-164-156-11	CERAMIC CHIP	0.1uF		25V
C804	1-162-970-11	CERAMIC CHIP	0.01uF	10%	25V
C805	1-104-658-91	ELECT	100uF	20%	10V
C806	1-115-156-11	CERAMIC CHIP	1uF		10V
C807	1-162-970-11	CERAMIC CHIP	0.01uF	10%	25V
C808	1-104-658-91	ELECT	100uF	20%	10V
C810	1-162-970-11	CERAMIC CHIP	0.01uF	10%	25V
C813	1-107-826-11	CERAMIC CHIP	0.1uF	10%	16V
C814	1-107-826-11	CERAMIC CHIP	0.1uF	10%	16V
C815	1-107-826-11	CERAMIC CHIP	0.1uF	10%	16V
C816	1-162-927-11	CERAMIC CHIP	100PF	5%	50V
C819	1-107-826-11	CERAMIC CHIP	0.1uF	10%	16V
C820	1-107-826-11	CERAMIC CHIP	0.1uF	10%	16V
C825	1-115-156-11	CERAMIC CHIP	1uF		10V
C826	1-162-964-11	CERAMIC CHIP	0.001uF	10%	50V
C827	1-162-968-11	CERAMIC CHIP	0.0047uF	10%	50V
C828	1-162-964-11	CERAMIC CHIP	0.001uF	10%	50V
C829	1-162-927-11	CERAMIC CHIP	100PF	5%	50V (G770CPK)
C831	1-162-927-11	CERAMIC CHIP	100PF	5%	50V
C833	1-162-927-11	CERAMIC CHIP	100PF	5%	50V
C837	1-162-927-11	CERAMIC CHIP	100PF	5%	50V
C839	1-164-230-11	CERAMIC CHIP	220PF	5%	50V
C841	1-162-927-11	CERAMIC CHIP	100PF	5%	50V
C842	1-162-927-11	CERAMIC CHIP	100PF	5%	50V
C843	1-162-927-11	CERAMIC CHIP	100PF	5%	50V
C846	1-162-927-11	CERAMIC CHIP	100PF	5%	50V
C847	1-162-970-11	CERAMIC CHIP	0.01uF	10%	25V
C848	1-162-970-11	CERAMIC CHIP	0.01uF	10%	25V
C849	1-162-970-11	CERAMIC CHIP	0.01uF	10%	25V
C850	1-162-970-11	CERAMIC CHIP	0.01uF	10%	25V
C851	1-162-927-11	CERAMIC CHIP	100PF	5%	50V
C852	1-162-927-11	CERAMIC CHIP	100PF	5%	50V
C853	1-162-927-11	CERAMIC CHIP	100PF	5%	50V
C854	1-162-927-11	CERAMIC CHIP	100PF	5%	50V
C855	1-162-927-11	CERAMIC CHIP	100PF	5%	50V
C856	1-162-927-11	CERAMIC CHIP	100PF	5%	50V
C857	1-162-927-11	CERAMIC CHIP	100PF	5%	50V
C951	1-164-227-11	CERAMIC CHIP	0.022uF	10%	25V
C953	1-164-227-11	CERAMIC CHIP	0.022uF	10%	25V
C954	1-126-934-11	ELECT	220uF	20%	16V
C955	1-164-227-11	CERAMIC CHIP	0.022uF	10%	25V
C957	1-126-923-91	ELECT	220uF	20%	10V
C961	1-126-923-91	ELECT	220uF	20%	10V
C962	1-164-227-11	CERAMIC CHIP	0.022uF	10%	25V (G700CP)
		< CONNECTOR >			
* CN799	1-784-732-11	CONNECTOR, FFC 10P			
CN803	1-784-741-11	CONNECTOR, FFC 19P			
CN804	1-784-741-11	CONNECTOR, FFC 19P			
CN805	1-779-289-11	CONNECTOR, FFC (LIF (NON-ZIF)) 21P			
		< CONNECTOR >			
CNP301	1-815-553-21	PIN, CONNECTOR (PWB) 5P			
CNP303	1-815-554-11	PIN, CONNECTOR (PWB) 6P			
CNP390	1-815-554-11	PIN, CONNECTOR (PWB) 6P (G770CPK)			
CNP391	1-815-553-11	PIN, CONNECTOR (PWB) 5P			
CNP393	1-815-552-11	PIN, CONNECTOR (PWB) 4P			
CNP394	1-815-551-11	PIN, CONNECTOR (PWB) 3P			
CNP397	1-815-551-11	PIN, CONNECTOR (PWB) 3P (G700CP)			
CNP803	1-815-550-31	PIN, CONNECTOR (PWB) 2P			
CNP805	1-815-551-11	PIN, CONNECTOR (PWB) 3P			
CNP806	1-815-550-21	PIN, CONNECTOR (PWB) 2P			
CNP807	1-815-550-11	PIN, CONNECTOR (PWB) 2P			
		< DIODE >			
D320	6-500-335-01	DIODE MC2838-T112-1			
D321	6-501-193-01	DIODE 1SS355WTE-17			
D322	6-501-193-01	DIODE 1SS355WTE-17			
D323	6-501-193-01	DIODE 1SS355WTE-17			
D324	6-500-335-01	DIODE MC2838-T112-1			
D351	6-501-579-01	DIODE MC2837			
D414	6-501-193-01	DIODE 1SS355WTE-17 (G770CPK)			
D415	6-500-334-01	DIODE MC2836-T112-1 (G770CPK)			
D461	6-500-335-01	DIODE MC2838-T112-1			
D462	8-719-069-54	DIODE UDZSTE-175.1B			
D801	6-500-334-01	DIODE MC2836-T112-1			
D802	6-500-334-01	DIODE MC2836-T112-1			
D804	6-501-193-01	DIODE 1SS355WTE-17 (G770CPK)			
D805	6-501-193-01	DIODE 1SS355WTE-17			
D951	6-501-193-01	DIODE 1SS355WTE-17			
D952	6-500-334-01	DIODE MC2836-T112-1			
D953	6-501-193-01	DIODE 1SS355WTE-17			
D954	8-719-977-28	DIODE DTZ10B			
D955	8-719-978-33	DIODE DTZ-TT11-6.8B			

MAIN

Ref. No.	Part No.	Description	Remark
		< FERRITE BEAD >	
FB831	1-216-864-11	SHORT CHIP 0	
FB832	1-216-864-11	SHORT CHIP 0	
FB833	1-216-864-11	SHORT CHIP 0	
FB834	1-216-864-11	SHORT CHIP 0	
FB835	1-414-760-21	FERRITE, EMI (SMD) (1608)	
FB836	1-414-760-21	FERRITE, EMI (SMD) (1608)	
FB837	1-216-864-11	SHORT CHIP 0	
		< IC >	
IC321	6-710-289-01	IC R2S15904SP	
IC351	8-759-426-51	IC BA5417	
IC371	8-759-426-51	IC BA5417	
IC401	8-759-332-64	IC BA3837 (G770CPK)	
IC801	6-807-359-01	IC MB90802NPF-G-127E1	
IC802	6-710-820-01	IC S-24CS02AFJ-TB-G	
IC805	6-704-118-01	IC S-80828CNMC-B8NT2G	
IC806	6-706-338-01	IC XC6202P332FR	
IC901	6-710-863-01	IC TK70540SCL-G (G700CP)	
IC902	6-702-771-01	IC TA78033LS	
		< JUMPER RESISTOR >	
JR105	1-216-864-11	SHORT CHIP 0	
JR106	1-216-864-11	SHORT CHIP 0	
JR107	1-216-864-11	SHORT CHIP 0	
JR108	1-216-864-11	SHORT CHIP 0	
JR109	1-216-864-11	SHORT CHIP 0	
JR110	1-216-864-11	SHORT CHIP 0	
JR111	1-216-864-11	SHORT CHIP 0	
JR113	1-216-864-11	SHORT CHIP 0	
JR114	1-216-864-11	SHORT CHIP 0	
JR117	1-216-864-11	SHORT CHIP 0	
JR118	1-216-864-11	SHORT CHIP 0	
JR120	1-216-864-11	SHORT CHIP 0	
JR121	1-216-864-11	SHORT CHIP 0	
JR122	1-216-864-11	SHORT CHIP 0	
JR124	1-216-864-11	SHORT CHIP 0	
JR126	1-216-864-11	SHORT CHIP 0	
JR127	1-216-864-11	SHORT CHIP 0	
JR128	1-216-864-11	SHORT CHIP 0	
JR129	1-216-864-11	SHORT CHIP 0	
JR131	1-216-864-11	SHORT CHIP 0	
JR133	1-216-864-11	SHORT CHIP 0	
JR134	1-216-864-11	SHORT CHIP 0	
JR135	1-216-864-11	SHORT CHIP 0	
JR136	1-216-864-11	SHORT CHIP 0	
JR137	1-216-864-11	SHORT CHIP 0	
JR138	1-216-864-11	SHORT CHIP 0	
JR140	1-216-864-11	SHORT CHIP 0	
JR150	1-216-864-11	SHORT CHIP 0	
JR151	1-216-864-11	SHORT CHIP 0	
JR152	1-216-864-11	SHORT CHIP 0	
JR153	1-216-864-11	SHORT CHIP 0	
JR155	1-216-864-11	SHORT CHIP 0	
		< COIL >	
L158	1-410-501-11	INDUCTOR 2.2uH	
L159	1-410-501-11	INDUCTOR 2.2uH	
L160	1-410-501-11	INDUCTOR 2.2uH	
L803	1-414-743-21	INDUCTOR 47uH	
		< TRANSISTOR >	
Q171	8-729-620-07	TRANSISTOR 2SC3052EF-T1-LEF	
Q271	8-729-620-07	TRANSISTOR 2SC3052EF-T1-LEF	
Q320	8-729-620-07	TRANSISTOR 2SC3052EF-T1-LEF	(G700CP)
Q321	8-729-620-07	TRANSISTOR 2SC3052EF-T1-LEF	
Q322	8-729-620-07	TRANSISTOR 2SC3052EF-T1-LEF	
Q323	8-729-045-62	TRANSISTOR 2SK2158-T2B	
Q351	8-729-036-89	TRANSISTOR KTC3198GR-AT	
Q352	6-551-443-01	TRANSISTOR RT1P436C-TP-1	
Q354	8-729-036-86	TRANSISTOR KTC3203Y-AT	
Q401	8-729-620-07	TRANSISTOR 2SC3052EF-T1-LEF	(G770CPK)
Q402	8-729-620-07	TRANSISTOR 2SC3052EF-T1-LEF	(G770CPK)
Q403	8-729-027-46	TRANSISTOR DTC114YKA-T146	(G770CPK)
Q405	8-729-620-07	TRANSISTOR 2SC3052EF-T1-LEF	(G770CPK)
Q406	8-729-027-46	TRANSISTOR DTC114YKA-T146	(G770CPK)
Q407	8-729-027-46	TRANSISTOR DTC114YKA-T146	(G770CPK)
Q451	8-729-620-07	TRANSISTOR 2SC3052EF-T1-LEF	
Q452	8-729-620-07	TRANSISTOR 2SC3052EF-T1-LEF	
Q801	8-729-027-46	TRANSISTOR DTC114YKA-T146	
Q803	8-729-620-07	TRANSISTOR 2SC3052EF-T1-LEF	
Q804	8-729-027-46	TRANSISTOR DTC114YKA-T146	
Q805	6-551-696-01	TRANSISTOR ISA1235AC1TP-1EF	
Q806	6-551-444-01	TRANSISTOR RT1N436C-TP-1	(SP, E41, AUS)
Q812	8-729-027-46	TRANSISTOR DTC114YKA-T146	
Q815	8-729-027-26	TRANSISTOR DTA114YKA-T146	
Q816	8-729-037-13	TRANSISTOR KTA1271Y	
Q950	8-729-037-13	TRANSISTOR KTA1271Y	
Q951	8-729-027-50	TRANSISTOR DTC123JKA-T146	
Q952	6-551-696-01	TRANSISTOR ISA1235AC1TP-1EF	
Q953	6-551-276-01	TRANSISTOR RT1N431C-TP-1	
Q954	8-729-036-86	TRANSISTOR KTC3203Y-AT	
Q959	8-729-027-46	TRANSISTOR DTC114YKA-T146	
Q971	8-729-037-08	TRANSISTOR KTD2058Y	
Q972	8-729-037-08	TRANSISTOR KTD2058Y	
		< RESISTOR >	
R101	1-216-864-11	SHORT CHIP 0 (G700CP/G770CP)	
R102	1-216-833-11	METAL CHIP 10K 5% 1/10W	
R103	1-216-841-11	METAL CHIP 47K 5% 1/10W	
R104	1-216-829-11	METAL CHIP 4.7K 5% 1/10W	
R120	1-216-829-11	METAL CHIP 4.7K 5% 1/10W	
R123	1-216-829-11	METAL CHIP 4.7K 5% 1/10W	
R124	1-216-864-11	SHORT CHIP 0	
R125	1-216-837-11	METAL CHIP 22K 5% 1/10W	
R126	1-216-841-11	METAL CHIP 47K 5% 1/10W	(G700CP)
R127	1-216-833-11	METAL CHIP 10K 5% 1/10W	

MAIN

Ref. No.	Part No.	Description			Remark
R129	1-216-864-11	SHORT CHIP	0		
R130	1-216-841-11	METAL CHIP	47K	5%	1/10W
R135	1-216-864-11	SHORT CHIP	0		
R151	1-216-833-11	METAL CHIP	10K	5%	1/10W (G770CPK)
R151	1-216-864-11	SHORT CHIP	0 (G700CP/G770CP)		
R152	1-216-829-11	METAL CHIP	4.7K	5%	1/10W (G770CPK)
R153	1-216-829-11	METAL CHIP	4.7K	5%	1/10W (G770CPK)
R154	1-216-833-11	METAL CHIP	10K	5%	1/10W (G770CPK)
R160	1-216-841-11	METAL CHIP	47K	5%	1/10W
R161	1-216-821-11	METAL CHIP	1K	5%	1/10W
R162	1-216-841-11	METAL CHIP	47K	5%	1/10W
R172	1-216-833-11	METAL CHIP	10K	5%	1/10W
R173	1-216-825-11	METAL CHIP	2.2K	5%	1/10W
R175	1-216-813-11	METAL CHIP	220	5%	1/10W
R176	1-216-801-11	METAL CHIP	22	5%	1/10W
R179	1-216-829-11	METAL CHIP	4.7K	5%	1/10W
R181	1-216-793-11	METAL CHIP	4.7	5%	1/10W
R201	1-216-864-11	SHORT CHIP	0 (G700CP/G770CP)		
R202	1-216-833-11	METAL CHIP	10K	5%	1/10W
R203	1-216-841-11	METAL CHIP	47K	5%	1/10W
R204	1-216-829-11	METAL CHIP	4.7K	5%	1/10W
R220	1-216-829-11	METAL CHIP	4.7K	5%	1/10W
R223	1-216-829-11	METAL CHIP	4.7K	5%	1/10W
R224	1-216-864-11	SHORT CHIP	0		
R225	1-216-837-11	METAL CHIP	22K	5%	1/10W
R226	1-216-841-11	METAL CHIP	47K	5%	1/10W (G700CP)
R227	1-216-833-11	METAL CHIP	10K	5%	1/10W
R229	1-216-864-11	SHORT CHIP	0		
R230	1-216-841-11	METAL CHIP	47K	5%	1/10W
R235	1-216-864-11	SHORT CHIP	0		
R251	1-216-833-11	METAL CHIP	10K	5%	1/10W (G770CPK)
R251	1-216-864-11	SHORT CHIP	0 (G700CP/G770CP)		
R252	1-216-829-11	METAL CHIP	4.7K	5%	1/10W (G770CPK)
R253	1-216-829-11	METAL CHIP	4.7K	5%	1/10W (G770CPK)
R254	1-216-833-11	METAL CHIP	10K	5%	1/10W (G770CPK)
R261	1-216-821-11	METAL CHIP	1K	5%	1/10W
R262	1-216-864-11	SHORT CHIP	0		
R272	1-216-833-11	METAL CHIP	10K	5%	1/10W
R273	1-216-825-11	METAL CHIP	2.2K	5%	1/10W
R275	1-216-813-11	METAL CHIP	220	5%	1/10W
R276	1-216-801-11	METAL CHIP	22	5%	1/10W
R279	1-216-829-11	METAL CHIP	4.7K	5%	1/10W
R281	1-216-793-11	METAL CHIP	4.7	5%	1/10W
R317	1-216-833-11	METAL CHIP	10K	5%	1/10W (G700CP)
R318	1-216-853-11	METAL CHIP	470K	5%	1/10W (G700CP)
R319	1-216-829-11	METAL CHIP	4.7K	5%	1/10W (G700CP)
R322	1-216-864-11	SHORT CHIP	0		
R324	1-216-825-11	METAL CHIP	2.2K	5%	1/10W
R325	1-216-825-11	METAL CHIP	2.2K	5%	1/10W
R326	1-216-821-11	METAL CHIP	1K	5%	1/10W
R328	1-216-821-11	METAL CHIP	1K	5%	1/10W
R329	1-216-825-11	METAL CHIP	2.2K	5%	1/10W
R330	1-216-817-11	METAL CHIP	470	5%	1/10W
R331	1-216-837-11	METAL CHIP	22K	5%	1/10W
R332	1-216-853-11	METAL CHIP	470K	5%	1/10W
R333	1-216-833-11	METAL CHIP	10K	5%	1/10W
R334	1-216-817-11	METAL CHIP	470	5%	1/10W
R335	1-216-837-11	METAL CHIP	22K	5%	1/10W
R336	1-216-833-11	METAL CHIP	10K	5%	1/10W
R337	1-216-837-11	METAL CHIP	22K	5%	1/10W
R338	1-216-825-11	METAL CHIP	2.2K	5%	1/10W
R339	1-216-821-11	METAL CHIP	1K	5%	1/10W
R340	1-216-821-11	METAL CHIP	1K	5%	1/10W
R341	1-216-829-11	METAL CHIP	4.7K	5%	1/10W
R342	1-216-825-11	METAL CHIP	2.2K	5%	1/10W
R343	1-216-825-11	METAL CHIP	2.2K	5%	1/10W
R344	1-216-829-11	METAL CHIP	4.7K	5%	1/10W
R345	1-216-817-11	METAL CHIP	470	5%	1/10W (G700CP)
R346	1-216-805-11	METAL CHIP	47	5%	1/10W (G700CP)
R347	1-216-853-11	METAL CHIP	470K	5%	1/10W
R348	1-216-829-11	METAL CHIP	4.7K	5%	1/10W
R351	1-216-829-11	METAL CHIP	4.7K	5%	1/10W
R353	1-216-829-11	METAL CHIP	4.7K	5%	1/10W
R356	1-216-821-11	METAL CHIP	1K	5%	1/10W
R357	1-216-817-11	METAL CHIP	470	5%	1/10W
R359	1-216-797-11	METAL CHIP	10	5%	1/10W
R360	1-216-797-11	METAL CHIP	10	5%	1/10W
R361	1-216-825-11	METAL CHIP	2.2K	5%	1/10W
R362	1-216-817-11	METAL CHIP	470	5%	1/10W
R363	1-216-813-11	METAL CHIP	220	5%	1/10W
R364	1-216-857-11	METAL CHIP	1M	5%	1/10W
R365	1-216-857-11	METAL CHIP	1M	5%	1/10W
R366	1-216-833-11	METAL CHIP	10K	5%	1/10W
R371	1-216-833-11	METAL CHIP	10K	5%	1/10W
R372	1-216-833-11	METAL CHIP	10K	5%	1/10W
R409	1-216-821-11	METAL CHIP	1K	5%	1/10W
R418	1-216-821-11	METAL CHIP	1K	5%	1/10W (G770CPK)
R419	1-216-841-11	METAL CHIP	47K	5%	1/10W (G770CPK)
R420	1-216-829-11	METAL CHIP	4.7K	5%	1/10W
R427	1-216-821-11	METAL CHIP	1K	5%	1/10W
R429	1-216-825-11	METAL CHIP	2.2K	5%	1/10W (G770CPK)
R430	1-216-841-11	METAL CHIP	47K	5%	1/10W (G770CPK)
R431	1-216-817-11	METAL CHIP	470	5%	1/10W (G770CPK)
R432	1-216-821-11	METAL CHIP	1K	5%	1/10W (G770CPK)
R433	1-216-841-11	METAL CHIP	47K	5%	1/10W (G770CPK)
R434	1-216-821-11	METAL CHIP	1K	5%	1/10W (G770CPK)

MAIN

Ref. No.	Part No.	Description			Remark
R435	1-216-829-11	METAL CHIP	4.7K	5%	1/10W (G770CPK)
R436	1-216-825-11	METAL CHIP	2.2K	5%	1/10W (G770CPK)
R437	1-216-821-11	METAL CHIP	1K	5%	1/10W (G770CPK)
R438	1-216-821-11	METAL CHIP	1K	5%	1/10W (G770CPK)
R439	1-216-817-11	METAL CHIP	470	5%	1/10W (G770CPK)
R440	1-216-817-11	METAL CHIP	470	5%	1/10W (G770CPK)
R441	1-216-849-11	METAL CHIP	220K	5%	1/10W (G770CPK)
R444	1-216-845-11	METAL CHIP	100K	5%	1/10W (G770CPK)
R445	1-216-829-11	METAL CHIP	4.7K	5%	1/10W (G770CPK)
R446	1-216-817-11	METAL CHIP	470	5%	1/10W (G770CPK)
R447	1-216-841-11	METAL CHIP	47K	5%	1/10W (G770CPK)
R448	1-216-821-11	METAL CHIP	1K	5%	1/10W
R451	1-216-821-11	METAL CHIP	1K	5%	1/10W
R452	1-216-821-11	METAL CHIP	1K	5%	1/10W
R453	1-216-821-11	METAL CHIP	1K	5%	1/10W
R454	1-216-833-11	METAL CHIP	10K	5%	1/10W
R456	1-216-821-11	METAL CHIP	1K	5%	1/10W
R457	1-216-833-11	METAL CHIP	10K	5%	1/10W
R460	1-216-813-11	METAL CHIP	220	5%	1/10W
R461	1-216-817-11	METAL CHIP	470	5%	1/10W
R462	1-216-817-11	METAL CHIP	470	5%	1/10W
R463	1-216-813-11	METAL CHIP	220	5%	1/10W
R468	1-216-821-11	METAL CHIP	1K	5%	1/10W
R470	1-216-817-11	METAL CHIP	470	5%	1/10W (G770CPK)
R477	1-216-845-11	METAL CHIP	100K	5%	1/10W
R480	1-216-841-11	METAL CHIP	47K	5%	1/10W
R481	1-216-841-11	METAL CHIP	47K	5%	1/10W
R482	1-216-821-11	METAL CHIP	1K	5%	1/10W
R483	1-216-841-11	METAL CHIP	47K	5%	1/10W
R484	1-216-841-11	METAL CHIP	47K	5%	1/10W
R485	1-216-841-11	METAL CHIP	47K	5%	1/10W
R486	1-216-845-11	METAL CHIP	100K	5%	1/10W
R488	1-216-837-11	METAL CHIP	22K	5%	1/10W
R489	1-216-841-11	METAL CHIP	47K	5%	1/10W (G770CPK)
R490	1-216-864-11	SHORT CHIP	0		
R491	1-216-864-11	SHORT CHIP	0		
R492	1-216-864-11	SHORT CHIP	0		
R493	1-216-821-11	METAL CHIP	1K	5%	1/10W
R494	1-216-841-11	METAL CHIP	47K	5%	1/10W (G770CPK)
R495	1-216-845-11	METAL CHIP	100K	5%	1/10W
R800	1-216-825-11	METAL CHIP	2.2K	5%	1/10W
R801	1-216-817-11	METAL CHIP	470	5%	1/10W
R802	1-216-821-11	METAL CHIP	1K	5%	1/10W
R803	1-216-821-11	METAL CHIP	1K	5%	1/10W
R804	1-216-821-11	METAL CHIP	1K	5%	1/10W
R805	1-216-821-11	METAL CHIP	1K	5%	1/10W

Ref. No.	Part No.	Description			Remark
R807	1-216-829-11	METAL CHIP	4.7K	5%	1/10W
R808	1-216-821-11	METAL CHIP	1K	5%	1/10W
R809	1-216-821-11	METAL CHIP	1K	5%	1/10W
R810	1-216-829-11	METAL CHIP	4.7K	5%	1/10W
R811	1-216-833-11	METAL CHIP	10K	5%	1/10W
R812	1-216-821-11	METAL CHIP	1K	5%	1/10W
R813	1-216-821-11	METAL CHIP	1K	5%	1/10W
R814	1-216-821-11	METAL CHIP	1K	5%	1/10W
R815	1-216-821-11	METAL CHIP	1K	5%	1/10W
R816	1-216-821-11	METAL CHIP	1K	5%	1/10W
R817	1-216-821-11	METAL CHIP	1K	5%	1/10W
R818	1-216-821-11	METAL CHIP	1K	5%	1/10W
R819	1-216-821-11	METAL CHIP	1K	5%	1/10W
R820	1-216-853-11	METAL CHIP	470K	5%	1/10W
R821	1-216-821-11	METAL CHIP	1K	5%	1/10W
R822	1-216-821-11	METAL CHIP	1K	5%	1/10W
R823	1-216-821-11	METAL CHIP	1K	5%	1/10W
R824	1-216-821-11	METAL CHIP	1K	5%	1/10W
R825	1-216-821-11	METAL CHIP	1K	5%	1/10W
R826	1-216-825-11	METAL CHIP	2.2K	5%	1/10W (E41)
R826	1-216-829-11	METAL CHIP	4.7K	5%	1/10W (SP, AUS)
R827	1-216-825-11	METAL CHIP	2.2K	5%	1/10W (SP)
R827	1-216-829-11	METAL CHIP	4.7K	5%	1/10W (E41, AUS)
R828	1-216-829-11	METAL CHIP	4.7K	5%	1/10W
R829	1-216-829-11	METAL CHIP	4.7K	5%	1/10W
R830	1-216-829-11	METAL CHIP	4.7K	5%	1/10W
R831	1-216-821-11	METAL CHIP	1K	5%	1/10W (G770CPK)
R834	1-216-833-11	METAL CHIP	10K	5%	1/10W
R835	1-216-833-11	METAL CHIP	10K	5%	1/10W
R836	1-216-833-11	METAL CHIP	10K	5%	1/10W
R837	1-216-833-11	METAL CHIP	10K	5%	1/10W
R838	1-216-833-11	METAL CHIP	10K	5%	1/10W
R839	1-216-841-11	METAL CHIP	47K	5%	1/10W
R840	1-216-833-11	METAL CHIP	10K	5%	1/10W
R841	1-216-833-11	METAL CHIP	10K	5%	1/10W
R842	1-216-833-11	METAL CHIP	10K	5%	1/10W
R843	1-216-833-11	METAL CHIP	10K	5%	1/10W
R844	1-216-833-11	METAL CHIP	10K	5%	1/10W
R845	1-216-833-11	METAL CHIP	10K	5%	1/10W
R846	1-216-833-11	METAL CHIP	10K	5%	1/10W
R847	1-216-833-11	METAL CHIP	10K	5%	1/10W
R848	1-216-833-11	METAL CHIP	10K	5%	1/10W
R849	1-216-833-11	METAL CHIP	10K	5%	1/10W
R850	1-216-833-11	METAL CHIP	10K	5%	1/10W
R851	1-216-833-11	METAL CHIP	10K	5%	1/10W
R852	1-216-833-11	METAL CHIP	10K	5%	1/10W
R853	1-216-833-11	METAL CHIP	10K	5%	1/10W
R854	1-216-833-11	METAL CHIP	10K	5%	1/10W
R855	1-216-833-11	METAL CHIP	10K	5%	1/10W
R856	1-216-833-11	METAL CHIP	10K	5%	1/10W
R857	1-216-833-11	METAL CHIP	10K	5%	1/10W
R858	1-216-833-11	METAL CHIP	10K	5%	1/10W
R859	1-216-833-11	METAL CHIP	10K	5%	1/10W

Ref. No.	Part No.	Description			Remark
R860	1-216-833-11	METAL CHIP	10K	5%	1/10W
R861	1-216-833-11	METAL CHIP	10K	5%	1/10W
R862	1-216-833-11	METAL CHIP	10K	5%	1/10W
R863	1-216-833-11	METAL CHIP	10K	5%	1/10W
R864	1-216-821-11	METAL CHIP	1K	5%	1/10W
R865	1-216-821-11	METAL CHIP	1K	5%	1/10W
R866	1-216-833-11	METAL CHIP	10K	5%	1/10W
R867	1-216-833-11	METAL CHIP	10K	5%	1/10W
R868	1-216-817-11	METAL CHIP	470	5%	1/10W
R869	1-216-821-11	METAL CHIP	1K	5%	1/10W (G770CPK)
R870	1-216-821-11	METAL CHIP	1K	5%	1/10W
R871	1-216-817-11	METAL CHIP	470	5%	1/10W
R872	1-216-821-11	METAL CHIP	1K	5%	1/10W
R873	1-216-821-11	METAL CHIP	1K	5%	1/10W
R874	1-216-821-11	METAL CHIP	1K	5%	1/10W
R875	1-216-821-11	METAL CHIP	1K	5%	1/10W
R876	1-216-813-11	METAL CHIP	220	5%	1/10W
R877	1-216-821-11	METAL CHIP	1K	5%	1/10W
R878	1-216-821-11	METAL CHIP	1K	5%	1/10W
R879	1-216-833-11	METAL CHIP	10K	5%	1/10W
R880	1-216-821-11	METAL CHIP	1K	5%	1/10W
R881	1-216-833-11	METAL CHIP	10K	5%	1/10W
R882	1-216-833-11	METAL CHIP	10K	5%	1/10W
R883	1-216-821-11	METAL CHIP	1K	5%	1/10W
R884	1-216-817-11	METAL CHIP	470	5%	1/10W (G770CPK)
R885	1-216-821-11	METAL CHIP	1K	5%	1/10W
R886	1-216-841-11	METAL CHIP	47K	5%	1/10W
R887	1-216-841-11	METAL CHIP	47K	5%	1/10W (G770CPK)
R888	1-216-833-11	METAL CHIP	10K	5%	1/10W (G700CP/G770CP)
R888	1-216-841-11	METAL CHIP	47K	5%	1/10W (G770CPK)
R891	1-216-841-11	METAL CHIP	47K	5%	1/10W
R892	1-216-864-11	SHORT CHIP	0		
R893	1-216-864-11	SHORT CHIP	0 (G700CP/G770CP)		
R894	1-216-797-11	METAL CHIP	10	5%	1/10W
R895	1-216-797-11	METAL CHIP	10	5%	1/10W (G770CPK)
R896	1-216-833-11	METAL CHIP	10K	5%	1/10W
R897	1-216-809-11	METAL CHIP	100	5%	1/10W
R898	1-216-829-11	METAL CHIP	4.7K	5%	1/10W (US, CND, MX, E92)
R899	1-216-809-11	METAL CHIP	100	5%	1/10W
R900	1-216-841-11	METAL CHIP	47K	5%	1/10W
R901	1-216-841-11	METAL CHIP	47K	5%	1/10W
R902	1-216-821-11	METAL CHIP	1K	5%	1/10W
R903	1-216-821-11	METAL CHIP	1K	5%	1/10W
R904	1-216-821-11	METAL CHIP	1K	5%	1/10W
R905	1-216-821-11	METAL CHIP	1K	5%	1/10W
R906	1-216-821-11	METAL CHIP	1K	5%	1/10W
R907	1-216-833-11	METAL CHIP	10K	5%	1/10W
R941	1-216-825-11	METAL CHIP	2.2K	5%	1/10W
R942	1-216-825-11	METAL CHIP	2.2K	5%	1/10W
R943	1-216-825-11	METAL CHIP	2.2K	5%	1/10W
R944	1-216-825-11	METAL CHIP	2.2K	5%	1/10W
R945	1-216-825-11	METAL CHIP	2.2K	5%	1/10W
R946	1-216-825-11	METAL CHIP	2.2K	5%	1/10W
R947	1-216-825-11	METAL CHIP	2.2K	5%	1/10W
R948	1-216-825-11	METAL CHIP	2.2K	5%	1/10W
R949	1-216-825-11	METAL CHIP	2.2K	5%	1/10W
R950	1-216-825-11	METAL CHIP	2.2K	5%	1/10W
R951	1-216-845-11	METAL CHIP	100K	5%	1/10W
R952	1-216-825-11	METAL CHIP	2.2K	5%	1/10W
R953	1-216-825-11	METAL CHIP	2.2K	5%	1/10W
R954	1-216-845-11	METAL CHIP	100K	5%	1/10W
R955	1-216-864-11	SHORT CHIP	0		
R957	1-216-864-11	SHORT CHIP	0		
R960	1-216-817-11	METAL CHIP	470	5%	1/10W
R961	1-216-821-11	METAL CHIP	1K	5%	1/10W
R964	1-216-809-11	METAL CHIP	100	5%	1/10W
R965	1-216-797-11	METAL CHIP	10	5%	1/10W
R966	1-216-797-11	METAL CHIP	10	5%	1/10W
		< VIBRATOR >			
X802	1-813-940-11	PIEZOELECTRIC OSCILLATOR (5.53MHz)			

****

	A-1244-295-A	MICROPHONE BOARD, COMPLETE (G770CPK)			
		**********			
		< CAPACITOR >			
C408	1-165-176-11	CERAMIC CHIP	0.047uF	10%	16V
C414	1-162-968-11	CERAMIC CHIP	0.0047uF	10%	50V
		< DIODE >			
D401	8-719-059-97	DIODE L-34HD (KARAOKE PON)			
		< JACK >			
J401	1-815-629-11	JACK (MIC MIX)			
		< COIL >			
L303	1-410-509-11	INDUCTOR	10uH		
L304	1-410-517-11	INDUCTOR	47uH		
L305	1-410-509-11	INDUCTOR	10uH		
L308	1-410-509-11	INDUCTOR	10uH		
		< RESISTOR >			
R426	1-216-821-11	METAL CHIP	1K	5%	1/10W
R464	1-216-825-11	METAL CHIP	2.2K	5%	1/10W
R465	1-216-825-11	METAL CHIP	2.2K	5%	1/10W
R473	1-216-829-11	METAL CHIP	4.7K	5%	1/10W
		< VARIABLE RESISTOR >			
RV401	1-227-757-11	RES, VAR, CARBON		10K (MIC LEVEL)	
		< SWITCH >			
S422	1-572-006-11	SWITCH, PUSH (1 KEY) (KARAOKE PON)			

****

POWER | POWER KEY | TC

Ref. No.	Part No.	Description			Remark
	A-1243-633-A	POWER BOARD, COMPLETE (US, CND, MX, E92)			
	A-1244-369-A	POWER BOARD, COMPLETE (SP, E41, AUS)			
		**********			
	1-533-233-31	FUSE HOLDER			
		< CAPACITOR >			
C901	1-163-037-11	CERAMIC CHIP	0.022uF	10%	50V
C902	1-163-037-11	CERAMIC CHIP	0.022uF	10%	50V
C903	1-163-037-11	CERAMIC CHIP	0.022uF	10%	50V
C904	1-163-037-11	CERAMIC CHIP	0.022uF	10%	50V
C909	1-126-943-11	ELECT	2200uF	20%	25V
C927	1-100-591-91	CERAMIC CHIP	1uF	10%	25V
C928	1-100-162-91	CERAMIC CHIP	1uF		50V
		< DIODE >			
D901	6-501-569-01	DIODE 1N5401-C352			
D902	6-501-569-01	DIODE 1N5401-C352			
D903	6-501-569-01	DIODE 1N5401-C352			
D904	6-501-569-01	DIODE 1N5401-C352			
**********					
	A-1244-294-A	POWER KEY BOARD, COMPLETE			
		**********			
	3-831-441-11	CUSHION (B)			
		< RESISTOR >			
R399	1-216-817-11	METAL CHIP	470	5%	1/10W
R400	1-216-813-11	METAL CHIP	220	5%	1/10W
R408	1-216-821-11	METAL CHIP	1K	5%	1/10W
R455	1-216-809-11	METAL CHIP	100	5%	1/10W
		< SWITCH >			
S403	1-786-050-21	SWITCH, KEY BOARD (DSPL/ENT)			
S408	1-786-050-21	SWITCH, KEY BOARD (POWER)			
S410	1-786-050-21	SWITCH, KEY BOARD (SLEEP)			
**********					
	A-1246-280-A	TC BOARD, COMPLETE			
		**********			
		< CAPACITOR >			
C101	1-162-964-11	CERAMIC CHIP	0.001uF	10%	50V
C102	1-104-658-91	ELECT	100uF	20%	10V
C103	1-165-176-11	CERAMIC CHIP	0.047uF	10%	16V
C104	1-162-966-11	CERAMIC CHIP	0.0022uF	10%	50V
C105	1-162-923-11	CERAMIC CHIP	47PF	5%	50V
C107	1-162-962-11	CERAMIC CHIP	470PF	10%	50V
C201	1-162-964-11	CERAMIC CHIP	0.001uF	10%	50V
C202	1-104-658-91	ELECT	100uF	20%	10V
C203	1-165-176-11	CERAMIC CHIP	0.047uF	10%	16V
C204	1-162-966-11	CERAMIC CHIP	0.0022uF	10%	50V
C205	1-162-923-11	CERAMIC CHIP	47PF	5%	50V
C207	1-162-962-11	CERAMIC CHIP	470PF	10%	50V
C301	1-104-658-91	ELECT	100uF	20%	10V
C302	1-104-658-91	ELECT	100uF	20%	10V
C303	1-104-658-91	ELECT	100uF	20%	10V
C304	1-126-947-11	ELECT	47uF	20%	35V
C305	1-162-962-11	CERAMIC CHIP	470PF	10%	50V
C306	1-162-970-11	CERAMIC CHIP	0.01uF	10%	25V
C307	1-162-964-11	CERAMIC CHIP	0.001uF	10%	50V
		< CONNECTOR >			
CN303	1-568-830-11	CONNECTOR, FFC 11P			
		< IC >			
IC301	6-710-092-01	IC TA2068NG (5, HZ)			
		< JUMPER RESISTOR >			
JC301	1-216-864-11	SHORT CHIP	0		
JC302	1-216-864-11	SHORT CHIP	0		
JC303	1-216-864-11	SHORT CHIP	0		
JC304	1-216-864-11	SHORT CHIP	0		
JC305	1-216-864-11	SHORT CHIP	0		
JC306	1-216-295-91	SHORT CHIP	0		
JC307	1-216-864-11	SHORT CHIP	0		
JC308	1-216-295-91	SHORT CHIP	0		
		< TRANSISTOR >			
Q301	8-729-901-81	TRANSISTOR	2SC2412K-T-146-R		
		< RESISTOR >			
R101	1-216-835-11	METAL CHIP	15K	5%	1/10W
R102	1-216-807-11	METAL CHIP	68	5%	1/10W
R103	1-216-843-11	METAL CHIP	68K	5%	1/10W
R104	1-216-835-11	METAL CHIP	15K	5%	1/10W
R105	1-216-835-11	METAL CHIP	15K	5%	1/10W
R106	1-216-825-11	METAL CHIP	2.2K	5%	1/10W
R110	1-216-809-11	METAL CHIP	100	5%	1/10W
R111	1-216-829-11	METAL CHIP	4.7K	5%	1/10W
R112	1-216-827-11	METAL CHIP	3.3K	5%	1/10W
R201	1-216-835-11	METAL CHIP	15K	5%	1/10W
R202	1-216-807-11	METAL CHIP	68	5%	1/10W
R203	1-216-843-11	METAL CHIP	68K	5%	1/10W
R204	1-216-835-11	METAL CHIP	15K	5%	1/10W
R205	1-216-835-11	METAL CHIP	15K	5%	1/10W
R206	1-216-825-11	METAL CHIP	2.2K	5%	1/10W
R210	1-216-025-11	RES-CHIP	100	5%	1/10W
R211	1-216-829-11	METAL CHIP	4.7K	5%	1/10W
R212	1-216-827-11	METAL CHIP	3.3K	5%	1/10W
R301	1-216-857-11	METAL CHIP	1M	5%	1/10W
R302	1-216-829-11	METAL CHIP	4.7K	5%	1/10W
R303	1-216-829-11	METAL CHIP	4.7K	5%	1/10W
R304	1-216-821-11	METAL CHIP	1K	5%	1/10W
R305	1-216-817-11	METAL CHIP	470	5%	1/10W
R306	1-218-867-11	METAL CHIP	6.8K	0.5%	1/10W
R307	1-216-797-11	METAL CHIP	10	5%	1/10W
R308	1-216-837-11	METAL CHIP	22K	5%	1/10W
R309	1-216-805-11	METAL CHIP	47	5%	1/10W
R314	1-216-817-11	METAL CHIP	470	5%	1/10W
R315	1-216-817-11	METAL CHIP	470	5%	1/10W
		< SWITCH >			
S301	1-786-126-11	SWITCH, SLIDE (REC/PB)			

Ref. No.	Part No.	Description			Remark
		< TRANSFORMER >			
T301	1-416-041-11	TRANSFORMER, BIAS OSCILLATION			
**********					
	A-1244-418-A	TUNER BOARD, COMPLETE			(US, CND, MX, E92)
	A-1244-419-A	TUNER BOARD, COMPLETE (SP, E41, AUS)			
		**********			
	2-895-061-01	TERMINAL, ANTENNA			
		< CAPACITOR >			
C1	1-162-923-11	CERAMIC CHIP	47PF	5%	50V
C4	1-162-964-11	CERAMIC CHIP	0.001uF	10%	50V
C7	1-162-910-11	CERAMIC CHIP	5PF	0.25PF	50V
C8	1-162-964-11	CERAMIC CHIP	0.001uF	10%	50V
C9	1-162-915-11	CERAMIC CHIP	10PF	0.5PF	50V
C10	1-126-960-11	ELECT	1uF	20%	50V
C11	1-107-826-11	CERAMIC CHIP	0.1uF	10%	16V
C12	1-126-963-11	ELECT	4.7uF	20%	50V
C13	1-162-970-11	CERAMIC CHIP	0.01uF	10%	25V (US, CND, MX, E92)
C14	1-162-970-11	CERAMIC CHIP	0.01uF	10%	25V (SP, E41, AUS)
C14	1-164-227-11	CERAMIC CHIP	0.022uF	10%	25V (US, CND, MX, E92)
C15	1-162-970-11	CERAMIC CHIP	0.01uF	10%	25V (SP, E41, AUS)
C15	1-164-227-11	CERAMIC CHIP	0.022uF	10%	25V (US, CND, MX, E92)
C18	1-126-923-91	ELECT	220uF	20%	10V
C20	1-107-826-11	CERAMIC CHIP	0.1uF	10%	16V
C21	1-126-960-11	ELECT	1uF	20%	50V
C22	1-107-826-11	CERAMIC CHIP	0.1uF	10%	16V
C23	1-126-960-11	ELECT	1uF	20%	50V
C24	1-162-960-11	CERAMIC CHIP	220PF	10%	50V
C26	1-162-927-11	CERAMIC CHIP	100PF	5%	50V
C27	1-162-927-11	CERAMIC CHIP	100PF	5%	50V
C29	1-104-658-91	ELECT	100uF	20%	10V
C30	1-162-970-11	CERAMIC CHIP	0.01uF	10%	25V
C31	1-162-919-11	CERAMIC CHIP	22PF	5%	50V
C32	1-162-964-11	CERAMIC CHIP	0.001uF	10%	50V
C33	1-162-970-11	CERAMIC CHIP	0.01uF	10%	25V
C34	1-162-970-11	CERAMIC CHIP	0.01uF	10%	25V
C35	1-162-970-11	CERAMIC CHIP	0.01uF	10%	25V
C37	1-162-970-11	CERAMIC CHIP	0.01uF	10%	25V
C39	1-107-826-11	CERAMIC CHIP	0.1uF	10%	16V
C41	1-164-230-11	CERAMIC CHIP	220PF	5%	50V
C42	1-162-927-11	CERAMIC CHIP	100PF	5%	50V
C43	1-162-919-11	CERAMIC CHIP	22PF	5%	50V
C47	1-162-915-11	CERAMIC CHIP	10PF	0.5PF	50V
C49	1-161-051-00	CERAMIC	0.01uF	10%	25V
C51	1-162-919-11	CERAMIC CHIP	22PF	5%	50V
C52	1-162-915-11	CERAMIC CHIP	10PF	0.5PF	50V
C53	1-137-190-91	FILM	0.22uF	5%	50V
C54	1-126-923-91	ELECT	220uF	20%	10V
C55	1-162-927-11	CERAMIC CHIP	100PF	5%	50V
C56	1-162-964-11	CERAMIC CHIP	0.001uF	10%	50V
C57	1-162-964-11	CERAMIC CHIP	0.001uF	10%	50V
C59	1-162-927-11	CERAMIC CHIP	100PF	5%	50V
C60	1-162-964-11	CERAMIC CHIP	0.001uF	10%	50V
C61	1-162-927-11	CERAMIC CHIP	100PF	5%	50V
C62	1-162-927-11	CERAMIC CHIP	100PF	5%	50V
C63	1-162-927-11	CERAMIC CHIP	100PF	5%	50V
C65	1-126-963-11	ELECT	4.7uF	20%	50V
C66	1-162-927-11	CERAMIC CHIP	100PF	5%	50V
C68	1-162-927-11	CERAMIC CHIP	100PF	5%	50V
C77	1-162-968-11	CERAMIC CHIP	0.0047uF	10%	50V (SP, E41, AUS)
C78	1-162-968-11	CERAMIC CHIP	0.0047uF	10%	50V (SP, E41, AUS)
C80	1-162-970-11	CERAMIC CHIP	0.01uF	10%	25V
C95	1-162-964-11	CERAMIC CHIP	0.001uF	10%	50V
		< FILTER >			
CF2	1-760-235-81	FILTER, CERAMIC			
CF4	1-781-962-21	FILTER, CERAMIC			
		< CONNECTOR >			
CNP1	1-568-854-11	CONNECTOR, FFC 11P			
		< TRIMMER >			
CT1	1-141-442-91	CAP, CERAMIC TRIMMER		20PF	
CT3	1-141-304-21	CAP, CERAMIC TRIMMER		10PF	
		< DIODE >			
D1	8-719-078-48	DIODE KV1471ETR-G			
D2	8-719-078-48	DIODE KV1471ETR-G			
D3	8-719-050-69	DIODE KV1520N			
D10	8-719-988-61	DIODE 1SS355TE-17			
D11	8-719-988-61	DIODE 1SS355TE-17			
		< IC >			
IC1	6-700-512-01	IC TA2149BN			
IC2	8-759-483-40	IC LC72137M-TLM-E			
		< JUMPER RESISTOR >			
JC1	1-216-864-11	SHORT CHIP	0		
JC2	1-216-864-11	SHORT CHIP	0		
JC3	1-216-864-11	SHORT CHIP	0		
JC4	1-216-864-11	SHORT CHIP	0		
JC5	1-216-864-11	SHORT CHIP	0		
JC6	1-216-864-11	SHORT CHIP	0		
JC11	1-216-864-11	SHORT CHIP	0		
JC12	1-216-864-11	SHORT CHIP	0		
JC13	1-216-864-11	SHORT CHIP	0		
JC24	1-216-864-11	SHORT CHIP	0 (SP, E41, AUS)		
JC33	1-216-864-11	SHORT CHIP	0		
JC34	1-216-864-11	SHORT CHIP	0		
		< COIL >			
L1	1-409-775-11	COIL, AIR-CORE			
L2	1-416-509-11	COIL, AIR-CORE			
L3	1-754-117-12	ANTENNA, FERRITE-ROD (MW)			
L4	1-411-234-21	COIL, AM OSC			
L11	1-414-142-11	INDUCTOR	1uH (US, CND, MX, E92)		

TUNER | VOLUME KEY | WOOFER KEY

Ref. No.	Part No.	Description			Remark
L21	1-410-509-11	INDUCTOR	10uH		
		< RESISTOR >			
R1	1-216-817-11	METAL CHIP	470	5%	1/10W
R2	1-216-817-11	METAL CHIP	470	5%	1/10W
R3	1-216-833-11	METAL CHIP	10K	5%	1/10W
R4	1-216-833-11	METAL CHIP	10K	5%	1/10W
R5	1-216-821-11	METAL CHIP	1K	5%	1/10W
R10	1-216-805-11	METAL CHIP	47	5%	1/10W
R11	1-216-825-11	METAL CHIP	2.2K	5%	1/10W
R13	1-216-821-11	METAL CHIP	1K	5%	1/10W
R14	1-216-821-11	METAL CHIP	1K	5%	1/10W
R24	1-216-813-11	METAL CHIP	220	5%	1/10W
R30	1-216-837-11	METAL CHIP	22K	5%	1/10W
R31	1-216-829-11	METAL CHIP	4.7K	5%	1/10W
R32	1-216-845-11	METAL CHIP	100K	5%	1/10W
R33	1-216-833-11	METAL CHIP	10K	5%	1/10W
R40	1-216-849-11	METAL CHIP	220K	5%	1/10W
R41	1-216-833-11	METAL CHIP	10K	5%	1/10W
R50	1-216-821-11	METAL CHIP	1K	5%	1/10W
R51	1-216-833-11	METAL CHIP	10K	5%	1/10W
R52	1-216-864-11	SHORT CHIP	0		
R53	1-216-829-11	METAL CHIP	4.7K	5%	1/10W
R54	1-216-817-11	METAL CHIP	470	5%	1/10W
R55	1-216-833-11	METAL CHIP	10K	5%	1/10W
R56	1-216-813-11	METAL CHIP	220	5%	1/10W
R57	1-216-809-11	METAL CHIP	100	5%	1/10W
R58	1-216-825-11	METAL CHIP	2.2K	5%	1/10W
R59	1-216-825-11	METAL CHIP	2.2K	5%	1/10W
R60	1-216-825-11	METAL CHIP	2.2K	5%	1/10W
R61	1-216-825-11	METAL CHIP	2.2K	5%	1/10W
R63	1-216-833-11	METAL CHIP	10K	5%	1/10W
R65	1-216-833-11	METAL CHIP	10K	5%	1/10W
R91	1-216-813-11	METAL CHIP	220	5%	1/10W
R92	1-216-813-11	METAL CHIP	220	5%	1/10W
R94	1-216-821-11	METAL CHIP	1K	5%	1/10W
		< TRANSFORMER >			
T1	1-433-741-11	TRANSFORMER, IF			
T2	1-419-465-11	COIL (DET)			
		< VIBRATOR >			
X1	1-795-449-11	VIBRATOR, CRYSTAL (75kHz)			

****

	A-1244-293-A	VOLUME KEY BOARD, COMPLETE			
		**********			
	3-831-441-11	CUSHION (B)			
		< RESISTOR >			
R411	1-216-813-11	METAL CHIP	220	5%	1/10W
R412	1-216-817-11	METAL CHIP	470	5%	1/10W
R413	1-216-821-11	METAL CHIP	1K	5%	1/10W
R414	1-216-821-11	METAL CHIP	1K	5%	1/10W
R415	1-216-825-11	METAL CHIP	2.2K	5%	1/10W
R425	1-216-825-11	METAL CHIP	2.2K	5%	1/10W
R443	1-216-821-11	METAL CHIP	1K	5%	1/10W
R458	1-216-809-11	METAL CHIP	100	5%	1/10W
		< SWITCH >			
S404	1-786-050-21	SWITCH, KEY BOARD (MODE)			
S407	1-786-050-21	SWITCH, KEY BOARD (VOL+)			
S411	1-786-050-21	SWITCH, KEY BOARD (AUTO PRESET RADIO/BAND)			
S412	1-786-050-21	SWITCH, KEY BOARD (AUDIO IN)			
S418	1-786-050-21	SWITCH, KEY BOARD (REPEAT)			
S420	1-786-050-21	SWITCH, KEY BOARD (VOL–)			

****

	A-1244-298-A	WOOFER KEY BOARD, COMPLETE			
		**********			
	3-831-441-11	CUSHION (B)			
		< CONNECTOR >			
CNP401	1-815-443-11	PIN, CONNECTOR (PWB) 2P			
		< RESISTOR >			
R401	1-216-813-11	METAL CHIP	220	5%	1/10W
R402	1-216-817-11	METAL CHIP	470	5%	1/10W
R403	1-216-821-11	METAL CHIP	1K	5%	1/10W
R416	1-216-825-11	METAL CHIP	2.2K	5%	1/10W
R417	1-216-821-11	METAL CHIP	1K	5%	1/10W
R423	1-216-821-11	METAL CHIP	1K	5%	1/10W
R424	1-216-825-11	METAL CHIP	2.2K	5%	1/10W
R459	1-216-809-11	METAL CHIP	100	5%	1/10W
		< SWITCH >			
S409	1-786-050-21	SWITCH, KEY BOARD (ROCK)			
S415	1-786-050-21	SWITCH, KEY BOARD (DANCE)			
S416	1-786-050-21	SWITCH, KEY BOARD (SALSA)			
S417	1-786-050-21	SWITCH, KEY BOARD (FLAT)			
S419	1-786-050-21	SWITCH, KEY BOARD (POWER DRIVE WOOFER)			
S421	1-786-050-21	SWITCH, KEY BOARD (REGGAETON)			

****

		MISCELLANEOUS			
		**********			
⚠160	8-820-126-02	OPTICAL PICK-UP (KSM-213CDP/C2NP)			
164	1-832-404-21	CABLE, FLEXIBLE FLAT (16 CORE)			
166	1-832-613-21	CABLE, FLEXIBLE FLAT (21 CORE)			
205	1-754-376-11	ANTENNA, TELESCOPIC			
206	1-452-899-11	MAGNET			
253	1-797-375-11	DECK, MECHANICAL (H21SB-C05)			
CNP2	1-833-922-11	CORD, CONNECTION (WITH PLUG)			
D403	6-501-452-01	DIODE 1L4345V22DOTDT02 (ILLUMINATION)			
D404	6-501-452-01	DIODE 1L4345V22DOTDT02 (ILLUMINATION)			
D405	6-501-452-01	DIODE 1L4345V22DOTDT02 (ILLUMINATION)			
D407	6-501-452-01	DIODE 1L4345V22DOTDT02 (ILLUMINATION)			
D408	6-501-452-01	DIODE 1L4345V22DOTDT02 (ILLUMINATION)			
D409	6-501-452-01	DIODE 1L4345V22DOTDT02 (ILLUMINATION)			
D410	6-501-452-01	DIODE 1L4345V22DOTDT02 (ILLUMINATION)			
D411	6-501-452-01	DIODE 1L4345V22DOTDT02 (ILLUMINATION)			
⚠F902	1-532-504-33	FUSE (T4AL/250V)			

Ref. No.	Part No.	Description	Remark
⚠J901	1-526-838-11	INLET, AC 2P (∿ AC IN) (SP, E41, AUS)	
⚠J901	1-540-009-11	INLET, AC (∿ AC IN) (US, CND, MX, E92)	
S201	1-771-853-11	SWITCH, DETECTION (LIMIT)	
SP191	1-826-684-11	SPEAKER (10cm)	
SP291	1-826-684-11	SPEAKER (10cm)	
SP393	1-826-683-11	SPEAKER (13cm)	
SW2	1-692-960-11	SWITCH, PUSH (1 KEY) (⏏ PUSH OPEN/CLOSE)	
⚠T901	1-435-964-12	TRANSFORMER, POWER (US, CND, MX, E92)	
⚠T901	1-435-965-12	TRANSFORMER, POWER (SP, E41, AUS)	

****

ACCESSORIES
****

	A-1246-031-A	REMOTE COMMANDER (RMT-CG700A) (Including Battery Case)	
⚠	1-769-412-22	CORD, POWER (G770CP)	
⚠	1-782-126-11	CORD, POWER (US, CND, MX, E92)	
⚠	1-827-945-12	CORD, POWER (AUS)	
	3-096-718-11	MANUAL, INSTRUCTION (ENGLISH) (G700CP)	
	3-096-718-21	MANUAL, INSTRUCTION (ENGLISH, SPANISH)	(E92)
	3-096-718-31	MANUAL, INSTRUCTION (ENGLISH, FRENCH)	(SP)
	3-096-718-41	MANUAL, INSTRUCTION (SPANISH) (E41)	
	3-096-718-51	MANUAL, INSTRUCTION (ENGLISH) (AUS)	
	3-096-718-61	MANUAL, INSTRUCTION (ENGLISH, FRENCH)	(CND)
	3-096-718-71	MANUAL, INSTRUCTION (SPANISH) (MX)	

REVISION HISTORY

Clicking the version allows you to jump to the revised page.
Also, clicking the version at the upper right on the revised page allows you to jump to the next revised page.

Ver.	Date	Description of Revision
1.0	2007.03	New