DIGITAL TELEVISION RECEIVER

Chassis : KS9A(N)
Model : CL21N11MJZXXAX

SERVICE Manual

COLOR TELEVISION RECEIVER

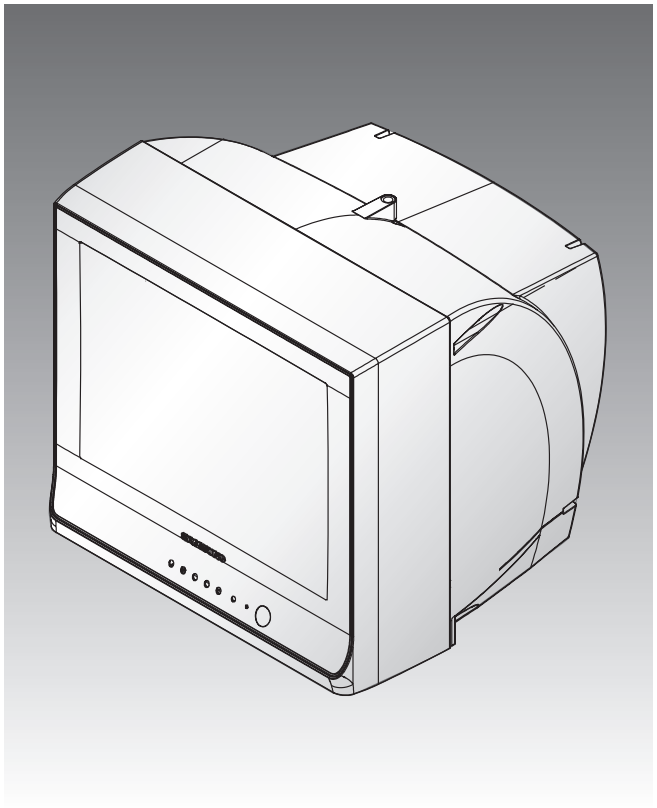

CONTENTS

1. Specifications
2. Alignment and Adjustments
3. Exploded View and Parts List
4. Electrical Part List
5. PCB Diagrams
6. Schematic Diagrams

1. Specifications

Regions	North America	South Central America	MEXICO
Broadcasting System	NTSC		
Tuning System	Electronic Remote Control System		
Receiving Channels	VHF (CH 2 ~ 13)		
	UHF (CH 14 ~ 69)		
	CATV (CH 1, 14 ~ 125)		
ANTENNA INPUT RESISTANCE	VHF, UHF 75 unbalanced		
Intermediate Frequency	Video : 45.75 MHz		
	Sound : 41.25 MHz		
	Chrominance Subcarrier: 42.17 MHz		
Power Supply	AC 120V, 60Hz	AC 100~240V, 60Hz	AC 120V, 60Hz

2. Alignment and Adjustments

2-1 General Alignment Instructions

1. Usually, a color TV-VCR needs only slight touch-up adjustment upon installation. Check the basic characteristics such as height, horizontal and vertical sync and focus.

2. Observe the picture for good black and white details. There should be objectionable color shading; if color shading is present, demagnetize, perform purity and convergence adjustments described below.

3. Use the specified test equipment or its equivalent.

4. Correct impedance matching is essential.

5. Avoid overload. Excessive signal from a sweep generator might overload the front-end of the TV. When inserting signal markers, do not allow the marker generator to distort test results.

6. Connect the TV only to an AC power source with voltage and frequency as specified on the backcover nameplate.

7. Do not attempt to connect or disconnect any wires while the TV is turned on. Make sure that the power cord is disconnected before replacing any parts.

8. To protect against shock hazard, use an isolation transformer.

2-2 Automatic Degaussing

A degaussing coil is mounted around the picture tube, so that external degaussing after moving the TV should be unnecessary. But the receiver must be properly degaussed upon installation.

The degaussing coil operates for about 1 second after the power is switched ON. If the set is moved or turned in a different direction, the power should be OFF for at least 10 minutes.

If the chassis or parts of the cabinet become magnetized, poor color purity will result. If this happens, use an external degaussing coil. Slowly move the degaussing coil around the faceplate of the picture tube and the sides and front of the receiver. Slowly withdraw the coil to a distance of about 6 feet before turning power OFF.

If color shading persists, perform the following Color purity and Convergence adjustments.

2-3 High Voltage Check

CAUTION : There is no high voltage adjustment on this chassis. The B+ power supply should be +135 volts (with full color- bar input and normal picture level).

1. Connect a digital voltmeter to the second anode of the picture tube.

2. Turn on the TV. Set the Brightness and Contrast controls to minimum (zero beam current).

3. Adjust the Brightness and contrast controls to both extremes. Ensure that the high voltage does not exceed 30 KV under any conditions.

2-4 FOCUS Adjustment

1. Iput a black and white signal.
2. Adjust the tuning control for the clearest picture.
3. Adjust the FOCUS control for well defined scanning lines in the center area of the screen.

2-5 Factory Adjustment

2-5-1 Service Mode

1. To enter the "Service Mode", Press the remote-control keys in this sequence :

   - If you do not have Factory remote-control

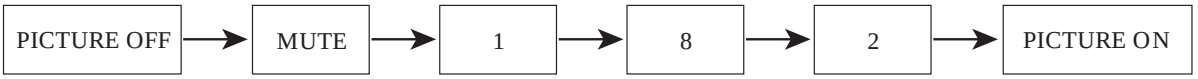

   - If you have Factory remote-control

2-5-2 Factoy Mode OSD

2-5-2 ADJUST

ADJUST
OPTION
CHCKSUM
RESET

T-FMTNUS-0000

T-FMTNUS FACTORY

No	Deflection	Remark	INITIAL	MIN	MAX	ADJUST
1	HS	Adjust	37	0	63	30
2	VA	Adjust	34	0	63	22
3	VSL	Adjust	30	0	63	23
4	VS	FIX	31	0	63	25
5	AGC	Adjust	33	0	63	33
6	CDL	FIX	9	0	15	9
7	SCT	Adjust	10	0	23	10
8	SBT	Adjust	7	0	23	7
9	BLR	Adjust	28	0	63	28
10	BLB	Adjust	43	0	63	43
11	RG	Adjust	30	0	63	30
12	GG	FIX	32	0	63	32
13	BG	Adjust	46	0	63	46
14	SC	FIX	29	0	63	33
15	STT	FIX	5	0	7	5
16	AKB	FIX	0	0	1	0
17	NDL	FIX	1	0	15	1
18	NSR	FIX	5	0	23	10
19	VOL	FIX	10	0	63	10
20	MVOL	FIX	7	0	50	7
21	RPO0	FIX	1	0	1	1
22	RPO1	FIX	1	0	1	1
23	CAP	FIX	12	0	15	12
24	FMWS	FIX	0	0	1	0
25	AGCS	FIX	1	0	3	1
26	OMD	FIX	15	0	63	15
27	SCL	FIX	3	0	3	3
28	PWL	FIX	13	0	15	15
29	MUS	FIX	1	0	1	1
30	SCBT	FIX	40	0	63	40
31	SSP	FIX	5	0	20	5
32	DNSR	FIX	17	0	23	10
33	DSBT	FIX	0	0	23	0
34	DCDL	FIX	6	0	16	9
35	DBLR	FIX	32	0	63	32
36	DBLB	FIX	32	0	63	32
37	DSK	FIX	0	0	1	0

Option

No	Item	Initial	21" FLAT	Remark
1	Video Mute	Off	Off	Video Mute time between the Channel changes
2	Audio	STEREO	STEREO	Audio MONO/STEREO Option
3	2ND SIF	EXTERNAL	EXTERNAL	SIF Option
4	Auto Power	Off	Off	Turns on automatically when the Master Power is turned ON
5	Audio Mute	On	On	Mutes the Audio when there is no source signal
6	Start Language	English	English	Preset OSD (On-Screen Display) language at time of purchase
7	Hotel Mode	Off	Off	
8	Blue Screen	On	On	Blue Screen when there is no source signal
9	V-Chip	Off	Off	
10	AV Option	AV1/2/DVD	AV1/2	Back Jack Option
11	AFN	Off	Off	

White Balance

Item	21" FLAT	Remark
Hight Light	275/265/45FL	
Low Light	275/265/1.5FL	

2-6 Screen Change (I2C Bus Geometric Adjustment)

1 V SHIFT (VS)

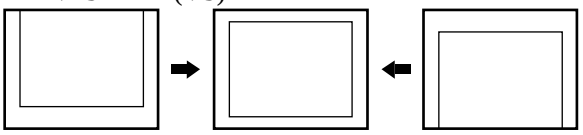

4 V SC (SC)

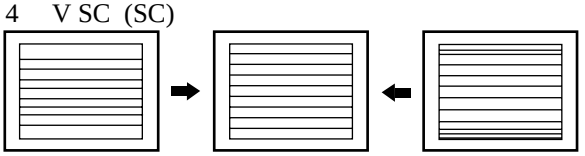

2 V AMP (VA)

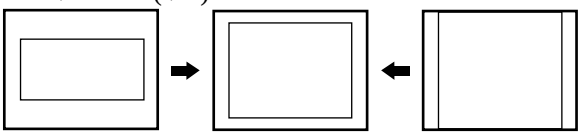

5 H SHIFT (HS)

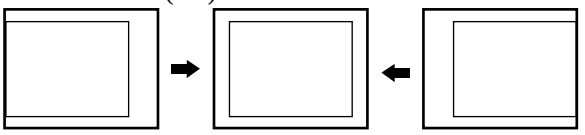

3 V SLOPE (VSL)

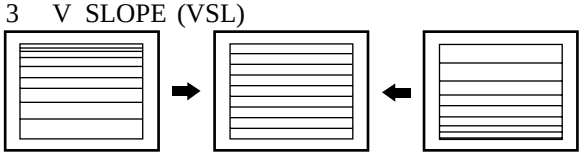

3. Exploded View & Parts List

3-1 CL21N11MJZXXAX

Yon can search for the updated part code through ITSELF web site.
URL:http://itself.sec.samsung.co.kr

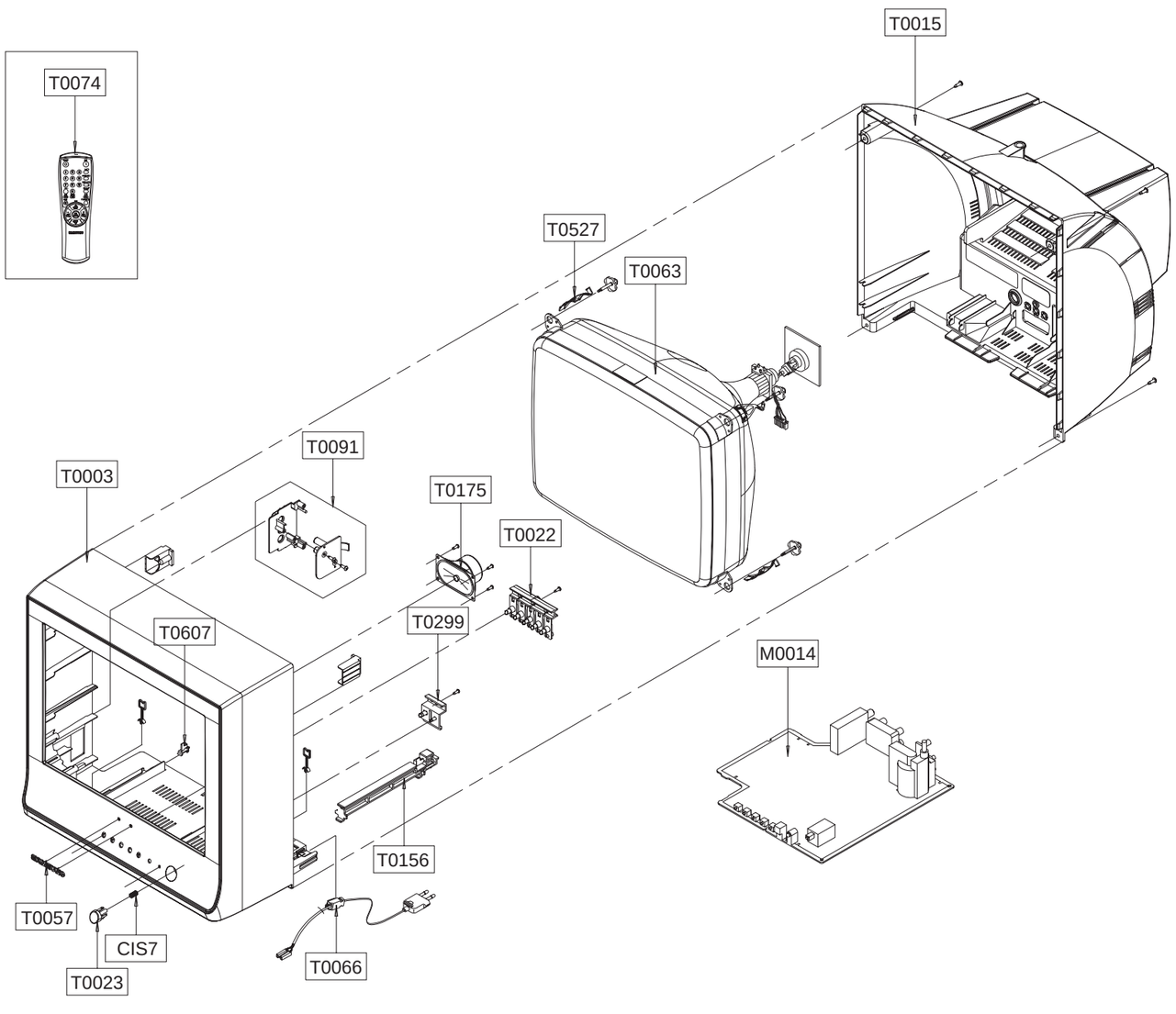

Loc No.	Code No.	Description;Specification	Q'ty	S.N.A
T0156	AA61-00721C	HOLDER-RAIL;H4,HIPS,V0,GRAY	1	S.N.A
T0607	AA61-40113A	STOPPER-PCB;501H,HIPS,-,-,HB,NTR,-	1	S.N.A
T0094	AA61-60003J	SPRING ETC-CS;-,SUS304,-,-,OD6,N7,OD6,-,	1	S.N.A
T0003	AA96-02056F	ASSY COVER P-FRONT;21N11,HB,G4309,SV012P	1	
T0299	AA64-03652A	WINDOW-RMC LED;17N11,PC,CLEAR	1	S.N.A
T0022	AA64-03653A	KNOB CONTROL;17N11,ABS,HB,G4309,SVM3012	1	S.N.A
T0023	AA64-03654A	KNOB POWER;17N11,ABS,HB,G4309,SVM3012	1	S.N.A
T0057	AA64-70123A	BADGE-BRAND;NEW,AL,L50,FLAT,SILVER,SAMSU	1	S.N.A
T0175	AA96-00371B	ASSY SPEAKER P;-,8ohm,5W,3001-001072,350	1	S.N.A
T0015	AA64-03923C	CABINET BACK;21N11[HQ],HIPS,HB,G4309	1	
T0066	AA96-20112A	ASSY POWER CORD;-,EP2/NO,H/C300,KJ10,THA	1	S.N.A
T0063	AA03-00403A	CRT COLOR;A51QDX993X,0MG,1.75MH,18MH,3.1	1	
T0527	AA65-00009B	CLAMPER CORE-D,COIL;21A8,NYLON 66,V0,-,-	4	S.N.A
T0091	AA94-14821A	ASSY PCB MISC-A/V SIDE;CL21N11MJZXXAX,KS	1	
M0014	AA94-14156C	ASSY PCB MAIN;CL21N11MJZXAX,KS9A	1	
T0074	AA59-00316C	REMOCON;TM75,ET,30,G6148A,NT,EX	1	

6. Schematic Diagrams

6-1 MICOM

This Document can not be used without Samsung's authorization.

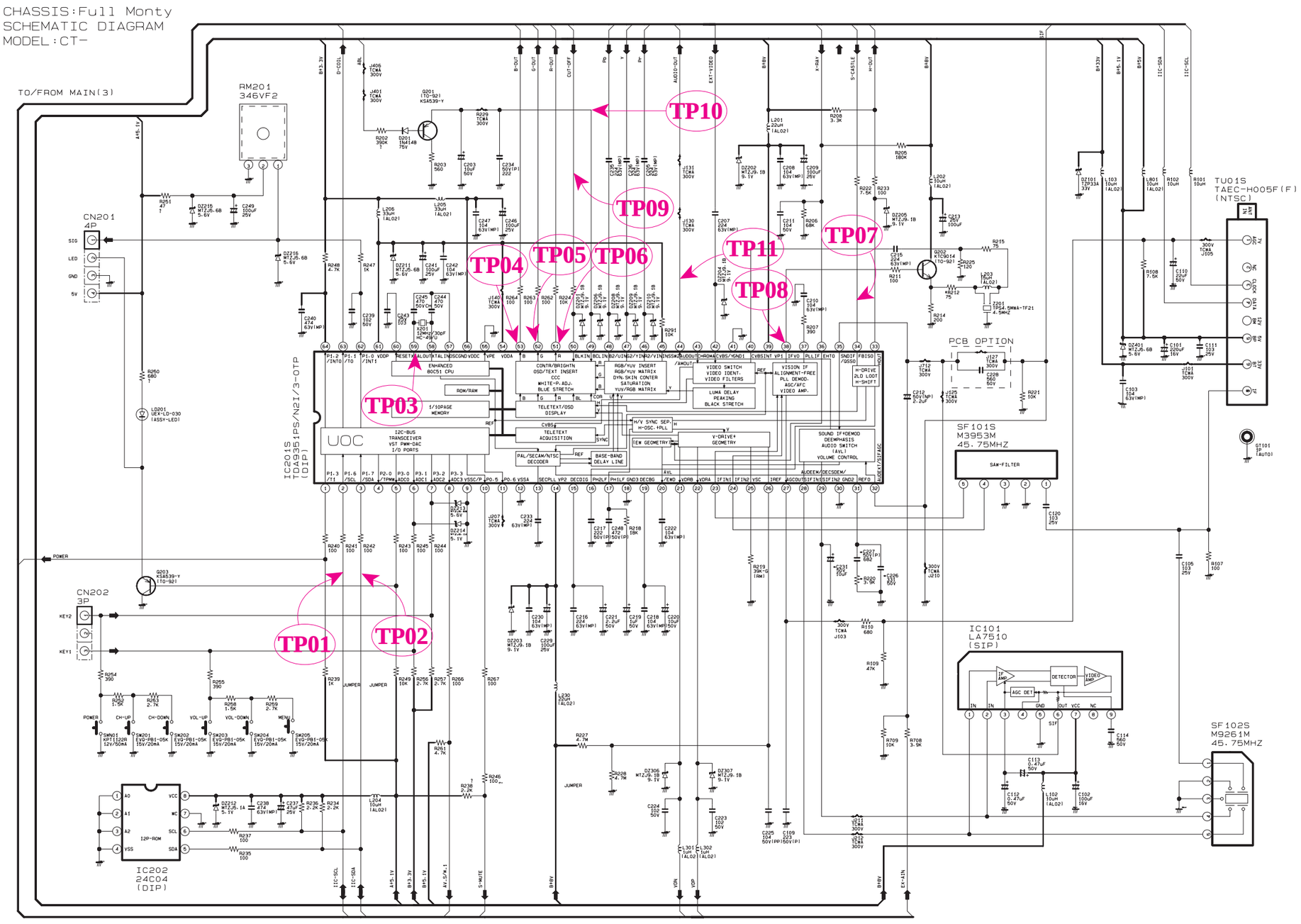

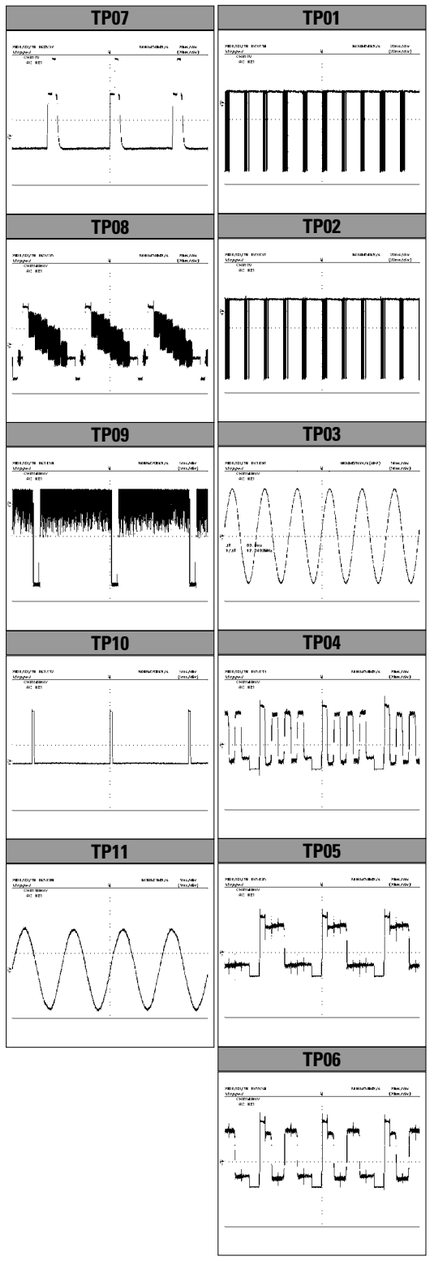

6-2 POWER

This Document can not be used without Samsung's authorization.

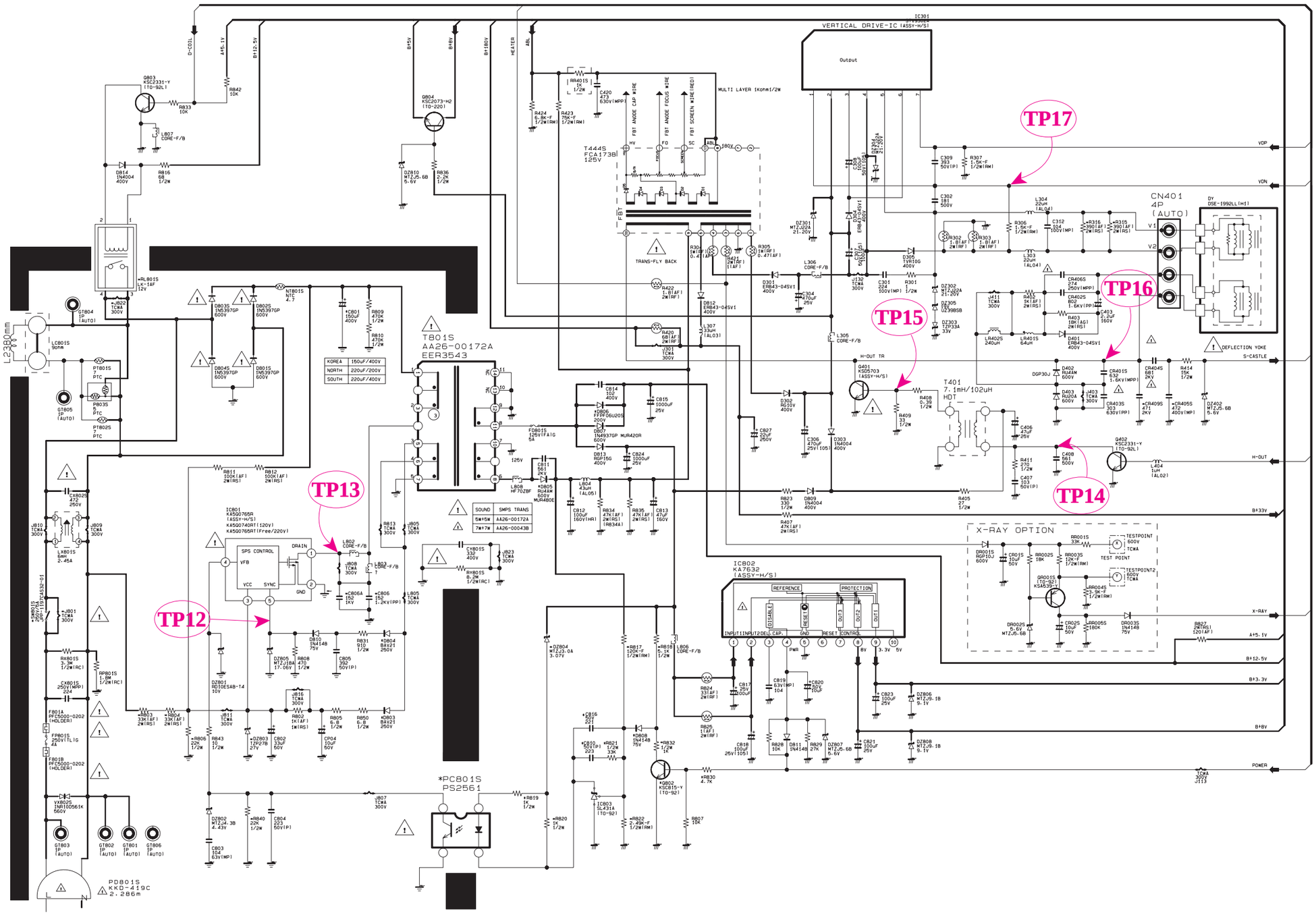

6-3 AUDIO / SIDE AV

This drawing is property of SEC
This Document can not be used without Samsung's authorization.

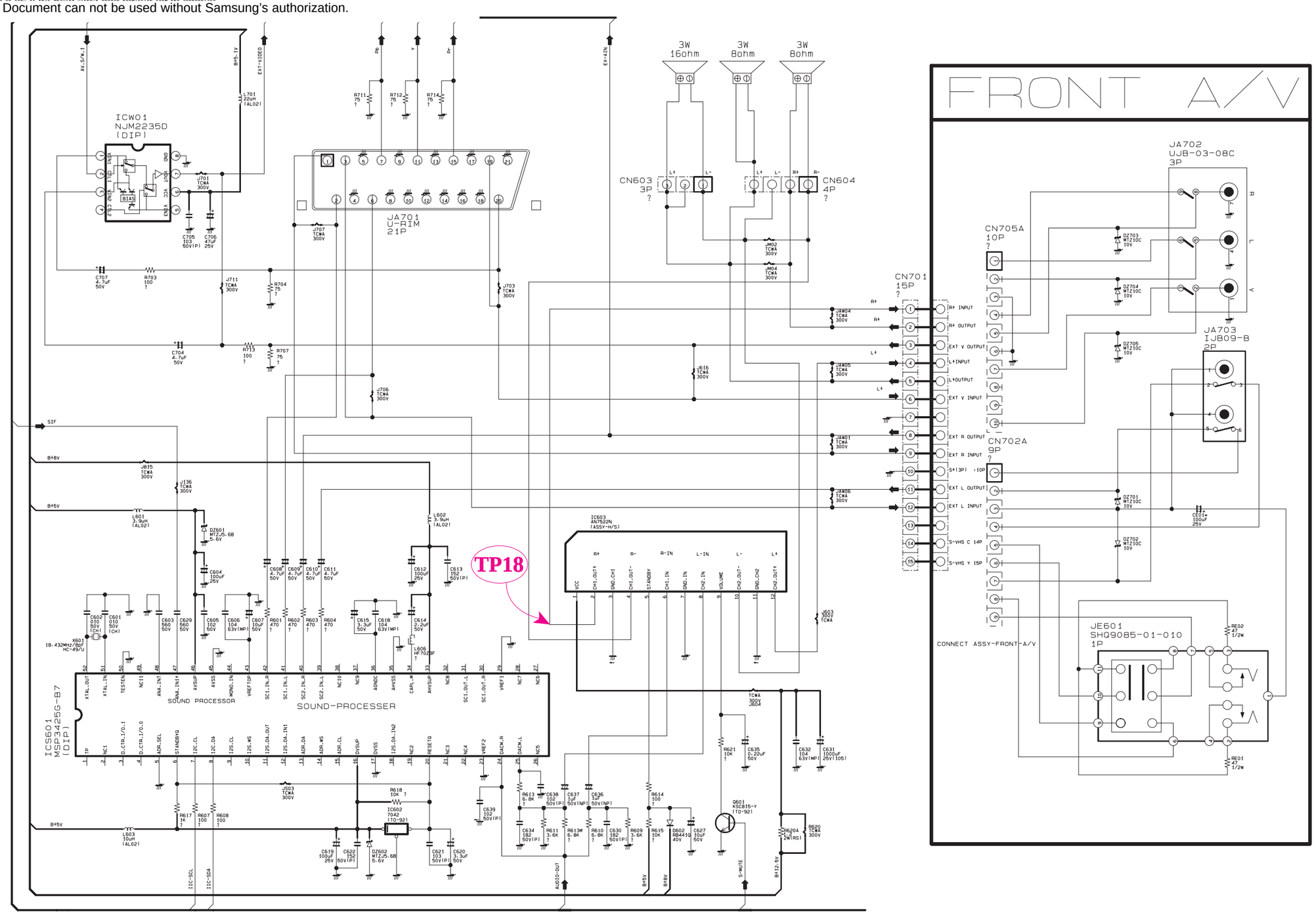

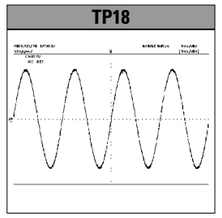

6-3 CRT

This Document can not be used without Samsung's authorization.

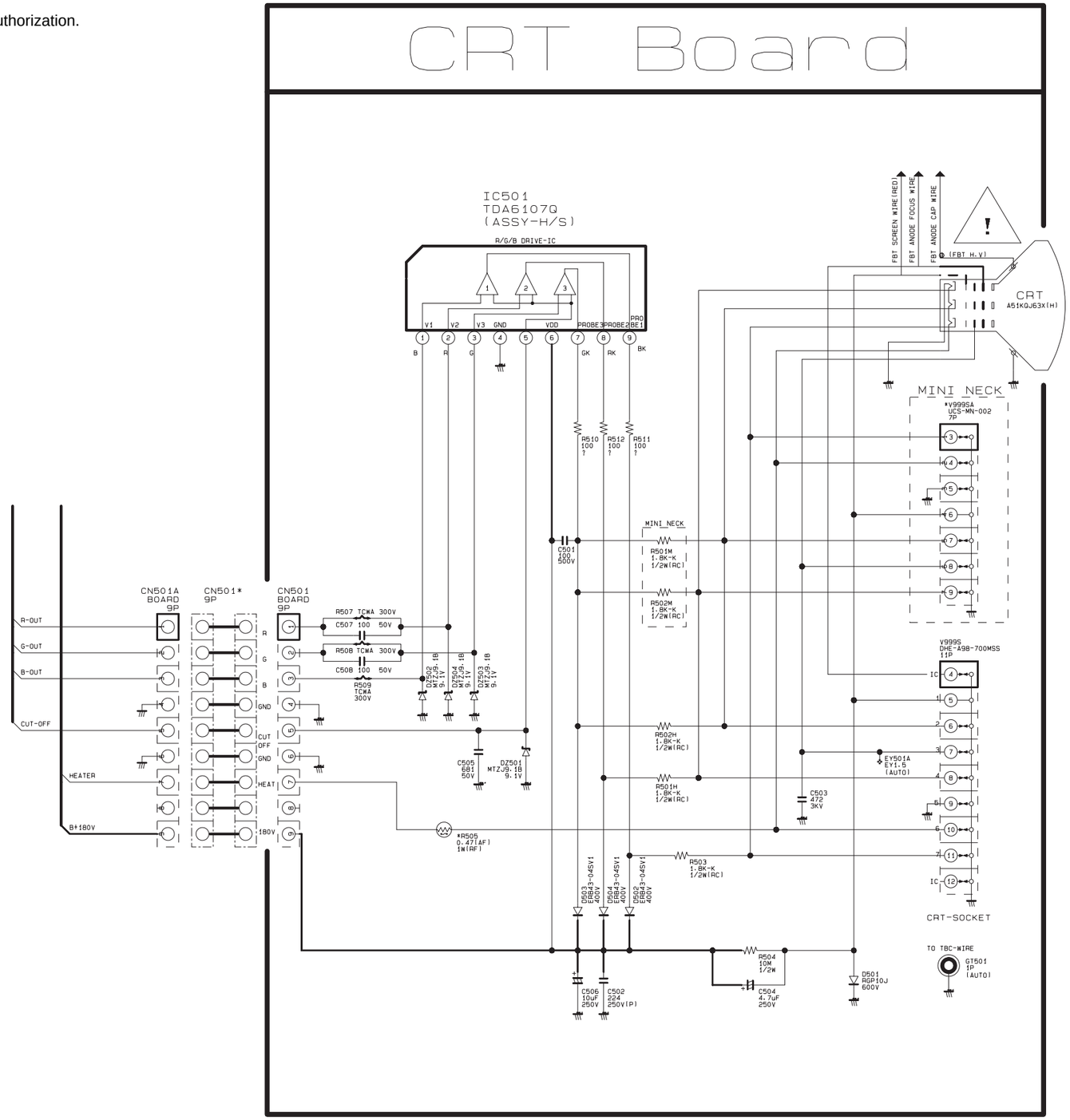

Yon can search for the updated part code through ITSELF web site.
URL:http://itself.sec.samsung.co.kr

4. Electrical Parts List

4-1 CL21N11MJZXXAX

ASSY COVER FRONT

Level	Loc.No.	Code No.	Description;Specification	Remark
1	M0001	AA90-04995K	ASSY COVER FRONT;CL21N11MJZXXAX	S.N.A
..2	CCM1	AA60-10050R	SCREW-MACHINE;-,SWRCH18A,M5,L31.5,HH,+,W	S.N.A
..2	T0081	AA60-10050T	SCREW-TAPPING;-,SWRCH18A,M4,L20,RH,+,2S,	S.N.A
..2	T0382	BP61-00495C	HOLDER-CARE;PJT,ACRYL-FOAM,T0.25,W30.0mm	S.N.A
..2	T0081	6003-001026	SCREW-TAPTITE;RH,+,B,M4,L15,ZPC(BLK),SWR	S.N.A
..2	T0003	AA96-02056F	ASSY COVER P-FRONT;21N11,HB,G4309,SV012P	
...3	T0081	6003-001019	SCREW-TAPTITE;RH,+,B,M4,L12,ZPC(BLK),SWR	S.N.A
...3	T0081	6003-001026	SCREW-TAPTITE;RH,+,B,M4,L15,ZPC(BLK),SWR	S.N.A
...3	T0081	6003-001026	SCREW-TAPTITE;RH,+,B,M4,L15,ZPC(BLK),SWR	S.N.A
...3	T0069	AA60-00091G	SPACER-FELT;-,FELT,200X10,-,-,BLK,T0.5,-	S.N.A
...3	T0069	AA60-00091R	SPACER-FELT;,FELT,250X10,,,BLK,T0.5,,	S.N.A
...3	T0156	AA61-00721C	HOLDER-RAIL;H4,HIPS,V0,GRAY	S.N.A
...3	T0607	AA61-40113A	STOPPER-PCB;501H,HIPS,-,-,HB,NTR,-	S.N.A
...3	CIS7	AA61-60003J	SPRING ETC-CS;-,SUS304,-,-,OD6,N7,OD6,-,	S.N.A
...3	T0299	AA64-03652A	WINDOW-RMC LED;17N11,PC,CLEAR	S.N.A
...3	T0022	AA64-03653A	KNOB CONTROL;17N11,ABS,HB,G4309,SVM3012	S.N.A
...3	T0023	AA64-03654A	KNOB POWER;17N11,ABS,HB,G4309,SVM3012	S.N.A
...3	T0003	AA64-03922C	CABINET FRONT;21N11,HB,G4309,SV012P,KS9A	S.N.A
....4		AA61-40010A	BOSS-WING;-,HIPS,-,-,-,NTR,HB	S.N.A
...3	T0057	AA64-70123A	BADGE-BRAND;NEW,AL,L50,FLAT,SILVER,SAMSU	S.N.A
...3		AA65-00011C	CLAMPER CORE-WIRE;ALL MODEL,NYLON 66,V2,	S.N.A
...3		AA65-30105A	CLAMPER CORE-WIRE;ALL MODEL,NYLON 66,V2,	S.N.A
...3	T0175	AA96-00371B	ASSY SPEAKER P;-,8ohm,5W,3001-001072,350	S.N.A
....4	T0082	3001-001071	SPEAKER;5W,8OHM,90DB,180HZ	
....4	T0245	AA39-20505M	LEAD CONNECTOR-ASSY;,4P,350,700MM,YSH025	
...3	T0382	BP61-00509C	HOLDER-CARE;PJT,ACRYL-FOAM,T0.25,W20.0mm	S.N.A

ASSY COVER REAR

Level	Loc.No.	Code No.	Description;Specification	Remark
1	M0002	AA90-04996G	ASSY COVER REAR;21N11(SAMEX),HIPS,HB,G43	S.N.A
..2	T0069	AA60-00091J	SPACER-FELT;-,FELT,330X10,-,-,BLK,T0.5,-	S.N.A
..2		AA64-03873F	INLAY-BACK;21M16,20,PS,T0.3,SHEET,BLK,KS	S.N.A
..2	T0214	AA65-30008A	CLAMPER CORE-CORD;-,PE,HB,-,BLK,-	S.N.A
..2	T0015	AA64-03923C	CABINET BACK;21N11[HQ],HIPS,HB,G4309	

ASSY FIXING

Level	Loc.No.	Code No.	Description;Specification	Remark
1		AA91-06346P	ASSY FIXING;CT21M16MNZXXTC,KS9A	S.N.A
..2		AA65-30009A	CLAMPER CORE-FBT;-,ABS,V0,-,BLK,-	S.N.A
..2		AA65-30018A	CLAMPER CORE-WIRE;DONG-A,NYLON-66,-,-,-,	S.N.A
..2		AA65-30111A	CLAMPER CORE-WIRE;ALL MODEL,NYLON,V0,-,W	S.N.A
⚠..2	T0066	AA96-20112A	ASSY POWER CORD;-,EP2/NO,H/C300,KJ10,THA	S.N.A
...3		3811-001609	WIRE-PVC CU;BCWA,300V,ROLL,-,#22,BLK	S.N.A
...3	T0268	AA39-10006K	CBF-POWER CORD;-,KJ-10,SPT-2 2/18AWG,240	
...3	T0010	AA61-20284A	HOLDER;P-CORD,PP,-,-,-,BLK,VO,KE-002	S.N.A

ASSY CPT

Level	Loc.No.	Code No.	Description;Specification	Remark
1	T0521	AA91-07326F	ASSY CPT;TXP2028X/XAA,0MG,A51QDX993X	S.N.A
⚠..2	T0063	AA03-00403A	CRT COLOR;A51QDX993X,0MG,1.75MH,18MH,3.1	
..2	T0079	AA27-00002A	MAGNET CONVERGENCE;JH291-11D,29.1MM	
..2	T0089	AA27-00213A	COIL DEGAUSSING;-,21INCH F,0.8MH,10%,23T	
..2	T0078	AA27-00324A	DEFLECTION YOKE;,DIF-2192AA(A),S/T,A51QD	
..2		AA63-60028A	SPACER-DY;-,NEOPRENE,-,-,-,BLK,-,-,V0 W1	S.N.A
..2	T0527	AA65-00009B	CLAMPER CORE-D,COIL;21A8,NYLON 66,V0,-,-	S.N.A
..2		AA98-70014D	ASSY TBC WIRE P;TVI,22,NTSC,PAL,1P,UL101	S.N.A

ASSY CHASSIS

Level	Loc.No.	Code No.	Description;Specification	Remark
1	M0017	AA91-07834C	ASSY CHASSIS;CL21N11MJZXXAX,KS9A	S.N.A
..2	M0014	AA94-14156C	ASSY PCB MAIN;CL21N11MJZXAX,KS9A	
...3		0202-001366	SOLDER-WIRE FLUX;-,RS60S,D1.2,63Sn/37Pb,	S.N.A
...3	T0083	0402-001599	DIODE-RECTIFIER;DGP30L,1500,3A,DO-201AD(	
...3	T0083	0402-001603	DIODE-RECTIFIER;MUR480E,800V,4A,DO-201AD	
...3	T0083	0402-001604	DIODE-RECTIFIER;MUR420,200V,4A,DO-201AD,	
...3	T0090	0502-001255	TR-POWER;ST2001HI(028Y),NPN,55000mW,-,ST	
⚠...3	PC801S	0604-001032	PHOTO-COUPLER;TR,170-260%,300mW,DIP-4,ST	
...3	IC112	1103-001209	IC-EEPROM;24C04,512x8,DIP,8P,10.16x7.11m	
...3	P803T	1404-001246	THERMISTOR-PTC;1.5OHM,+30/-20,110V,140VA	
...3	C598	2201-002002	C-CERAMIC,DISC;4.7NF,20%,400V,Y5U,BK,16X	
⚠...3	CR401S	2303-000282	C-FILM,LEAD-PPF;6nF,5%,1.6KV,TP,29*23*8.	
⚠...3	CX801S	2306-000318	C-FILM,LEAD-PPF;220NF,20%,250V,BK,-,22.5	
...3	C701	2401-000822	C-AL;220uF,20%,200V,WT,BK,22x35,10	
...3	X201	2801-004033	CRYSTAL-UNIT;12MHZ,30PPM,28-AAM,30PF,30O	
⚠...3	SF101S	2904-001221	FILTER-SAW AV;45.75MHz,SIP5K,ST,14.2dB,M	
...3	SWN01	3404-000295	SWITCH-TACT;12VDC,50mA,160gf,8.4X22.7,SP	
⚠...3	FP801S	3601-000281	FUSE-CARTRIDGE;250V,4A,TIME-LAG,GLASS,5.	
⚠...3	V999S	3704-001105	SOCKET-CRT;11P,20PI,26.5PI,NI,-	
...3	CN906	3711-000658	CONNECTOR-HEADER;BOX,12P,1R,2.5mm,STRAIG	
...3	T0119	AA09-00455A	IC MICOM;TDA9377PS/N2/AI,T-FMTNUS-1000,6	
⚠...3	T801S	AA26-00043B	TRANS SWITCHING;,CS21S5T,80~280V,PM2,PL3	
...3	T0616	AA26-00201A	TRANS FBT;FCA173B,KS1A-1,3.8mH,FERRITE,1	
⚠...3	T401	AA26-50001B	TRANS-HORIZ.DRIVE;-,-,-,7.1mH,-,-,102uH,	
⚠...3	LR402S	AA27-00296A	COIL CHOKE;220UH,CPTTV,220UH,10%,3A,DR14	
...3	T0296	AA27-30003L	COIL LINEARITY;-,73uH,DR12x15,0.55mm,-,B	
⚠...3	LX801S	AA29-00015A	FILTER LINE NOISE;WS32W8,28-20MH 1.5A,+-	
...3	D0254	AA32-00014A	MODULE REMOCON;346VF2,38KHZ,940MM,MESH,V	
...3	T0245	AA39-20620C	LEAD CONNECTOR-ASSY;,9P,500MM,YBNH250-09	
...3	CIS3	AA40-00016A	TUNER-F/S;TDQ-6F/13F2S,NTSC,181CH,45.75M	
...3	CN401	AA60-40012D	PIN-GT,ASSY;T1.6,6-12.5-,NYLON66	S.N.A
...3	IC301	AA96-00244M	ASSY HEAT SINK P;SCREWAA64-00046A,LA7804	S.N.A
....4	CIS	0205-001154	OIL-SILICON;G746,-,-	S.N.A
....4	T0088	1204-002121	IC-VERTICAL DEF.;LA78040N,TO220,7P,-,PLA	
....4	T0081	6003-000335	SCREW-TAPTITE;RH,+,2S,M3,L8,ZPC(YEL),SWR	S.N.A
....4	CIS	AA62-00046A	HEAT SINK-PS;-,-,-,T1.0,-,D1(DREAM) 60X25X	S.N.A
...3	IC603	AA96-00244N	ASSY HEAT SINK P;SCREW,AA62-00046A,AN752	S.N.A
....4	H/S	0205-001154	OIL-SILICON;G746,-,-	S.N.A
....4	T0124	1201-002050	IC-POWER AMP;AN7522N,SIP,12P,29.6x7.7mm,	
....4	T0081	6003-000335	SCREW-TAPTITE;RH,+,2S,M3,L8,ZPC(YEL),SWR	S.N.A
....4	H/S	AA62-00046A	HEAT SINK-PS;-,-,-,T1.0,-,D1(DREAM) 60X25X	S.N.A
⚠...3	IC802	AA96-00245A	ASSY HEAT SINK P;,AA62-00055A,KA7632	S.N.A
....4	IC062	1203-001939	IC-MULTI REG.;7632,SIP,10P,-,PLASTIC,3.3	
....4	T0081	6003-000334	SCREW-TAPTITE;RH,+,2S,M3,L6,ZPC(YEL),SWR	S.N.A
....4		AA62-00055A	HEAT SINK-PS;-,-,T1.0,-,35*15*25,D1,-,-	S.N.A
...3	LD201	AA96-01710A	ASSY MISC P-LED GUIDE;LTL-307JGTH128R	S.N.A
...3	IC501	AA96-50311A	ASSY HEAT SINK P;-,VIDEO,AA62-30175D,TDA	S.N.A
....4	T0074	1201-001159	IC-VIDEO AMP;6107,ZSIP,9P,-,SINGLE,-,PLA	
....4	T0081	6003-000334	SCREW-TAPTITE;RH,+,2S,M3,L6,ZPC(YEL),SWR	S.N.A
....4		AA62-30175D	HEAT SINK-PS;-,SECC,T1.0,-,33X15X30 FT-2	S.N.A
...3		AA97-15032B	ASSY AUTO-MAIN;CL21N11MJZXXAX,KS9A	S.N.A
⚠....4	CISS	0401-000005	DIODE-SWITCHING;1N4148,75V,150MA,DO-35,T	
⚠....4	CISS	0401-000005	DIODE-SWITCHING;1N4148,75V,150MA,DO-35,T	
⚠....4	CISS	0401-000005	DIODE-SWITCHING;1N4148,75V,150MA,DO-35,T	
⚠....4	CISS	0401-000005	DIODE-SWITCHING;1N4148,75V,150MA,DO-35,T	
⚠....4	CISS	0401-000006	DIODE-SWITCHING;BAV21,250V,200MA,DO-35,T	
⚠....4	CISS	0401-000006	DIODE-SWITCHING;BAV21,250V,200MA,DO-35,T	
....4	T0083	0402-000132	DIODE-RECTIFIER;1N4004,400V,1A,DO-41,TP	

Level	Loc.No.	Code No.	Description;Specification	Remark
....4	T0083	0402-000132	DIODE-RECTIFIER;1N4004,400V,1A,DO-41,TP	
....4	T0083	0402-000132	DIODE-RECTIFIER;1N4004,400V,1A,DO-41,TP	
....4	T0083	0402-000254	DIODE-RECTIFIER;RGP10J,600V,1A,DO-41,TP	
....4	T0083	0402-000493	DIODE-RECTIFIER;1R5GU41,400V,1.5A,DO-15L	
....4	T0083	0402-000534	DIODE-RECTIFIER;RG10V,400V,1.2A,DO-201,T	
....4	T0083	0402-000540	DIODE-RECTIFIER;RU20A,600V,1.5A,-,TP	
....4	T0083	0402-001105	DIODE-RECTIFIER;ERB43-04SV1,400V,1A,TS-1	
....4	T0083	0402-001105	DIODE-RECTIFIER;ERB43-04SV1,400V,1A,TS-1	
....4	T0083	0402-001105	DIODE-RECTIFIER;ERB43-04SV1,400V,1A,TS-1	
....4	T0083	0402-001105	DIODE-RECTIFIER;ERB43-04SV1,400V,1A,TS-1	
....4	T0083	0402-001105	DIODE-RECTIFIER;ERB43-04SV1,400V,1A,TS-1	
....4	T0083	0402-001105	DIODE-RECTIFIER;ERB43-04SV1,400V,1A,TS-1	
....4	T0083	0402-001105	DIODE-RECTIFIER;ERB43-04SV1,400V,1A,TS-1	
....4	T0083	0402-001111	DIODE-RECTIFIER;1N5397GP,600V,1.5A,-,TP	
....4	T0083	0402-001111	DIODE-RECTIFIER;1N5397GP,600V,1.5A,-,TP	
....4	T0083	0402-001111	DIODE-RECTIFIER;1N5397GP,600V,1.5A,-,TP	
....4	T0083	0402-001111	DIODE-RECTIFIER;1N5397GP,600V,1.5A,-,TP	
....4	DZ016	0403-000508	DIODE-ZENER;MTZJ5.6B,5.45-5.73V,500MW,DO	
....4	DZ016	0403-000508	DIODE-ZENER;MTZJ5.6B,5.45-5.73V,500MW,DO	
....4	DZ016	0403-000508	DIODE-ZENER;MTZJ5.6B,5.45-5.73V,500MW,DO	
....4	DZ016	0403-000508	DIODE-ZENER;MTZJ5.6B,5.45-5.73V,500MW,DO	
....4	DZ016	0403-000508	DIODE-ZENER;MTZJ5.6B,5.45-5.73V,500MW,DO	
....4	DZ016	0403-000508	DIODE-ZENER;MTZJ5.6B,5.45-5.73V,500MW,DO	
....4	DZ016	0403-000508	DIODE-ZENER;MTZJ5.6B,5.45-5.73V,500MW,DO	
....4	DZ016	0403-000508	DIODE-ZENER;MTZJ5.6B,5.45-5.73V,500MW,DO	
....4	DZ016	0403-000700	DIODE-ZENER;TZP33A,5%,1000MW,DO-41,TP	
....4	DZ016	0403-000700	DIODE-ZENER;TZP33A,5%,1000MW,DO-41,TP	
....4	DZ016	0403-000720	DIODE-ZENER;MTZJ9.1B,8.57-9.01V,500MW,DO	
....4	DZ016	0403-000720	DIODE-ZENER;MTZJ9.1B,8.57-9.01V,500MW,DO	
....4	DZ016	0403-000720	DIODE-ZENER;MTZJ9.1B,8.57-9.01V,500MW,DO	
....4	DZ016	0403-000720	DIODE-ZENER;MTZJ9.1B,8.57-9.01V,500MW,DO	
....4	DZ016	0403-000720	DIODE-ZENER;MTZJ9.1B,8.57-9.01V,500MW,DO	
....4	DZ016	0403-000720	DIODE-ZENER;MTZJ9.1B,8.57-9.01V,500MW,DO	
....4	DZ016	0403-000720	DIODE-ZENER;MTZJ9.1B,8.57-9.01V,500MW,DO	
....4	DZ016	0403-000720	DIODE-ZENER;MTZJ9.1B,8.57-9.01V,500MW,DO	
....4	DZ016	0403-000720	DIODE-ZENER;MTZJ9.1B,8.57-9.01V,500MW,DO	
....4	DZ016	0403-000720	DIODE-ZENER;MTZJ9.1B,8.57-9.01V,500MW,DO	
....4	DZ016	0403-000720	DIODE-ZENER;MTZJ9.1B,8.57-9.01V,500MW,DO	
....4	DZ016	0403-000720	DIODE-ZENER;MTZJ9.1B,8.57-9.01V,500MW,DO	
....4	DZ016	0403-000720	DIODE-ZENER;MTZJ9.1B,8.57-9.01V,500MW,DO	
....4	DZ016	0403-001140	DIODE-ZENER;RD10ESAB-T4,9.7-10.2V,400MW,	
....4	DZ016	0403-001221	DIODE-ZENER;UZ39BSB,35.36-37.19V,500MW,D	
....4	DZ016	0403-001318	DIODE-ZENER;MTZJ4.3B,4.17-4.43V,500MW,DO	
....4	DZ016	0403-001327	DIODE-ZENER;MTZJ18A,16.22-17.06V,500MW,D	
....4	DZ016	0403-001328	DIODE-ZENER;MTZJ22A,20.15-21.2V,500MW,DO	
....4	DZ016	0403-001328	DIODE-ZENER;MTZJ22A,20.15-21.2V,500MW,DO	
....4	DZ016	0403-001328	DIODE-ZENER;MTZJ22A,20.15-21.2V,500MW,DO	
....4	DZ016	0403-001373	DIODE-ZENER;MTZJ5.1A,4.85-5.03V,500MW,D0	
....4	DZ016	0403-001373	DIODE-ZENER;MTZJ5.1A,4.85-5.03V,500MW,D0	
....4	T0156	0501-000283	TR-SMALL SIGNAL;KSA539,PNP,400mW,TO-92,T	
....4	T0156	0501-000283	TR-SMALL SIGNAL;KSA539,PNP,400mW,TO-92,T	
....4	T0156	0501-000369	TR-SMALL SIGNAL;KSC2331-Y,NPN,1000mW,TO-	
....4	T0156	0501-000369	TR-SMALL SIGNAL;KSC2331-Y,NPN,1000mW,TO-	
....4	T0156	0501-000389	TR-SMALL SIGNAL;KSC815,NPN,400mW,TO-92,T	
....4	T0156	0501-000389	TR-SMALL SIGNAL;KSC815,NPN,400mW,TO-92,T	
....4	T0156	0501-000389	TR-SMALL SIGNAL;KSC815,NPN,400mW,TO-92,T	
....4	T0090	0502-001007	TR-POWER;KSC2073-H2,NPN,25W,TO-220,ST,6	
....4	T0900	1404-001045	THERMISTOR-NTC;4.7ohm,15%,2900K,35.0mW,T	
⚠ 4	VX802S	1405-000152	VARISTOR;560V,2500A,14x8.5mm,TP	
....4	R125	2001-000005	R-CARBON;390ohm,5%,1/8W,AA,TP,1.8x3.2mm	
....4	R125	2001-000005	R-CARBON;390ohm,5%,1/8W,AA,TP,1.8x3.2mm	
....4	R125	2001-000005	R-CARBON;390ohm,5%,1/8W,AA,TP,1.8x3.2mm	
....4	R125	2001-000008	R-CARBON;15KOHM,5%,1/8W,AA,TP,1.8X3.2MM	
....4	R125	2001-000010	R-CARBON;68KOHM,5%,1/8W,AA,TP,1.8X3.2MM	
....4	R075	2001-000016	R-CARBON(S);1OHM,5%,1/2W,AA,TP,2.4X6.4MM	
....4	R075	2001-000019	R-CARBON(S);10OHM,5%,1/2W,AA,TP,2.4X6.4M	
....4	R075	2001-000022	R-CARBON(S);33OHM,5%,1/2W,AA,TP,2.4X6.4M	
....4	R075	2001-000037	R-CARBON(S);330OHM,5%,1/2W,AA,TP,2.4X6.4	
....4	R075	2001-000109	R-CARBON(S);470OHM,5%,1/2W,AA,TP,2.4X6.4	
....4	R125	2001-000214	R-CARBON;1.1KOHM,5%,1/8W,AA,TP,1.8X3.2MM	
....4	R125	2001-000214	R-CARBON;1.1KOHM,5%,1/8W,AA,TP,1.8X3.2MM	
....4	R125	2001-000241	R-CARBON;1.5KOHM,5%,1/8W,AA,TP,1.8X3.2MM	
....4	R125	2001-000241	R-CARBON;1.5KOHM,5%,1/8W,AA,TP,1.8X3.2MM	
....4	R125	2001-000273	R-CARBON;100KOHM,5%,1/8W,AA,TP,1.8X3.2MM	
....4	R125	2001-000273	R-CARBON;100KOHM,5%,1/8W,AA,TP,1.8X3.2MM	
....4	R125	2001-000281	R-CARBON;100OHM,5%,1/8W,AA,TP,1.8X3.2MM	

Level	Loc.No.	Code No.	Description;Specification	Remark
....4	R125	2001-000281	R-CARBON;100OHM,5%,1/8W,AA,TP,1.8X3.2MM	
....4	R125	2001-000281	R-CARBON;100OHM,5%,1/8W,AA,TP,1.8X3.2MM	
....4	R125	2001-000281	R-CARBON;100OHM,5%,1/8W,AA,TP,1.8X3.2MM	
....4	R125	2001-000281	R-CARBON;100OHM,5%,1/8W,AA,TP,1.8X3.2MM	
....4	R125	2001-000281	R-CARBON;100OHM,5%,1/8W,AA,TP,1.8X3.2MM	
....4	R125	2001-000281	R-CARBON;100OHM,5%,1/8W,AA,TP,1.8X3.2MM	
....4	R125	2001-000281	R-CARBON;100OHM,5%,1/8W,AA,TP,1.8X3.2MM	
....4	R125	2001-000281	R-CARBON;100OHM,5%,1/8W,AA,TP,1.8X3.2MM	
....4	R125	2001-000281	R-CARBON;100OHM,5%,1/8W,AA,TP,1.8X3.2MM	
....4	R125	2001-000281	R-CARBON;100OHM,5%,1/8W,AA,TP,1.8X3.2MM	
....4	R125	2001-000281	R-CARBON;100OHM,5%,1/8W,AA,TP,1.8X3.2MM	
....4	R125	2001-000281	R-CARBON;100OHM,5%,1/8W,AA,TP,1.8X3.2MM	
....4	R125	2001-000281	R-CARBON;100OHM,5%,1/8W,AA,TP,1.8X3.2MM	
....4	R125	2001-000281	R-CARBON;100OHM,5%,1/8W,AA,TP,1.8X3.2MM	
....4	R125	2001-000281	R-CARBON;100OHM,5%,1/8W,AA,TP,1.8X3.2MM	
....4	R125	2001-000281	R-CARBON;100OHM,5%,1/8W,AA,TP,1.8X3.2MM	
....4	R125	2001-000290	R-CARBON;10KOHM,5%,1/8W,AA,TP,1.8X3.2MM	
....4	R125	2001-000290	R-CARBON;10KOHM,5%,1/8W,AA,TP,1.8X3.2MM	
....4	R125	2001-000290	R-CARBON;10KOHM,5%,1/8W,AA,TP,1.8X3.2MM	
....4	R125	2001-000290	R-CARBON;10KOHM,5%,1/8W,AA,TP,1.8X3.2MM	
....4	R125	2001-000290	R-CARBON;10KOHM,5%,1/8W,AA,TP,1.8X3.2MM	
....4	R125	2001-000290	R-CARBON;10KOHM,5%,1/8W,AA,TP,1.8X3.2MM	
....4	R125	2001-000325	R-CARBON;120OHM,5%,1/8W,AA,TP,1.8X3.2MM	
....4	R125	2001-000397	R-CARBON;180KOHM,5%,1/8W,AA,TP,1.8X3.2MM	
....4	R125	2001-000429	R-CARBON;1KOHM,5%,1/8W,AA,TP,1.8X3.2MM	
....4	R125	2001-000429	R-CARBON;1KOHM,5%,1/8W,AA,TP,1.8X3.2MM	
....4	R125	2001-000449	R-CARBON;2.2KOHM,5%,1/8W,AA,TP,1.8X3.2MM	
....4	R125	2001-000449	R-CARBON;2.2KOHM,5%,1/8W,AA,TP,1.8X3.2MM	
....4	R125	2001-000449	R-CARBON;2.2KOHM,5%,1/8W,AA,TP,1.8X3.2MM	
....4	R125	2001-000472	R-CARBON;2.7KOHM,5%,1/8W,AA,TP,1.8X3.2MM	
....4	R125	2001-000472	R-CARBON;2.7KOHM,5%,1/8W,AA,TP,1.8X3.2MM	
....4	R125	2001-000472	R-CARBON;2.7KOHM,5%,1/8W,AA,TP,1.8X3.2MM	
....4	R125	2001-000472	R-CARBON;2.7KOHM,5%,1/8W,AA,TP,1.8X3.2MM	
....4	R125	2001-000490	R-CARBON;200OHM,5%,1/8W,AA,TP,1.8X3.2MM	
....4	R125	2001-000563	R-CARBON;27KOHM,5%,1/8W,AA,TP,1.8X3.2MM	
....4	R125	2001-000591	R-CARBON;3.3KOHM,5%,1/8W,AA,TP,1.8X3.2MM	
....4	R125	2001-000613	R-CARBON;3.9KOHM,5%,1/8W,AA,TP,1.8X3.2MM	
....4	R125	2001-000689	R-CARBON;390KOHM,5%,1/8W,AA,TP,1.8X3.2MM	
....4	R125	2001-000734	R-CARBON;4.7KOHM,5%,1/8W,AA,TP,1.8X3.2MM	
....4	R125	2001-000734	R-CARBON;4.7KOHM,5%,1/8W,AA,TP,1.8X3.2MM	
....4	R125	2001-000734	R-CARBON;4.7KOHM,5%,1/8W,AA,TP,1.8X3.2MM	
....4	R125	2001-000739	R-CARBON;4.7MOHM,5%,1/8W,AA,TP,1.8X3.2MM	
....4	R125	2001-000739	R-CARBON;4.7MOHM,5%,1/8W,AA,TP,1.8X3.2MM	
....4	R125	2001-000773	R-CARBON;470KOHM,5%,1/8W,AA,TP,1.8X3.2MM	
....4	R125	2001-000786	R-CARBON;47KOHM,5%,1/8W,AA,TP,1.8X3.2MM	
....4	R125	2001-000793	R-CARBON;47OHM,5%,1/8W,AA,TP,1.8X3.2MM	
....4	R125	2001-000857	R-CARBON;560OHM,5%,1/8W,AA,TP,1.8X3.2MM	
....4	R125	2001-000890	R-CARBON;6.8KOHM,5%,1/8W,AA,TP,1.8X3.2MM	
....4	R125	2001-000890	R-CARBON;6.8KOHM,5%,1/8W,AA,TP,1.8X3.2MM	
....4	R125	2001-000924	R-CARBON;680OHM,5%,1/8W,AA,TP,1.8X3.2MM	
....4	R125	2001-000924	R-CARBON;680OHM,5%,1/8W,AA,TP,1.8X3.2MM	
....4	R125	2001-000947	R-CARBON;7.5KOHM,5%,1/8W,AA,TP,1.8X3.2MM	
....4	R125	2001-000947	R-CARBON;7.5KOHM,5%,1/8W,AA,TP,1.8X3.2MM	
....4	R125	2001-000969	R-CARBON;75OHM,5%,1/8W,AA,TP,1.8X3.2MM	
....4	R125	2001-000969	R-CARBON;75OHM,5%,1/8W,AA,TP,1.8X3.2MM	
....4	R125	2001-000969	R-CARBON;75OHM,5%,1/8W,AA,TP,1.8X3.2MM	
....4	R075	2001-001050	R-CARBON(S);1.5KOHM,5%,1/2W,AA,TP,2.4X6.	
....4	R075	2001-001062	R-CARBON(S);10MOHM,5%,1/2W,AA,TP,2.4X6.4	
....4	R075	2001-001078	R-CARBON(S);15KOHM,5%,1/2W,AA,TP,2.4X6.4	
....4	R075	2001-001088	R-CARBON(S);1KOHM,5%,1/2W,AA,TP,2.4X6.4M	
....4	R075	2001-001088	R-CARBON(S);1KOHM,5%,1/2W,AA,TP,2.4X6.4M	
....4	R075	2001-001088	R-CARBON(S);1KOHM,5%,1/2W,AA,TP,2.4X6.4M	
....4	R075	2001-001088	R-CARBON(S);1KOHM,5%,1/2W,AA,TP,2.4X6.4M	
....4	R075	2001-001093	R-CARBON(S);2.2KOHM,5%,1/2W,AA,TP,2.4X6.	
....4	R075	2001-001108	R-CARBON(S);22KOHM,5%,1/2W,AA,TP,2.4X6.4	
....4	R075	2001-001114	R-CARBON(S);270OHM,5%,1/2W,AA,TP,2.4X6.4	
....4	R075	2001-001116	R-CARBON(S);27OHM,5%,1/2W,AA,TP,2.4X6.4M	
....4	R075	2001-001131	R-CARBON(S);33KOHM,5%,1/2W,AA,TP,2.4X6.4	
....4	R075	2001-001170	R-CARBON(S);6.8OHM,5%,1/2W,AA,TP,2.4X6.4	
....4	R075	2001-001197	R-CARBON(S);910OHM,5%,1/2W,AA,TP,2.4X6.4	
....4	R0521	2002-001008	R-COMPOSITION;1.8Kohm,10%,1/2W,AA,TP,3.7	
....4	R0521	2002-001008	R-COMPOSITION;1.8Kohm,10%,1/2W,AA,TP,3.7	
....4	R0521	2002-001008	R-COMPOSITION;1.8Kohm,10%,1/2W,AA,TP,3.7	
....4	R0521	2002-001010	R-COMPOSITION;1.8Mohm,5%,1/2W,AA,TP,3.7x	

Level	Loc.No.	Code No.	Description;Specification	Remark
....4	R0521	2002-001012	R-COMPOSITION;8.2Mohm,5%,1/2W,AA,TP,3.7x	
....4	R407	2003-001040	R-METAL OXIDE(S);47Kohm,5%,2W,AF,TP,3.9x	
....4	R315	2003-002009	R-METAL OXIDE(S);390ohm,5%,2W,AF,TP,3.9x	
....4	R316	2003-002009	R-METAL OXIDE(S);390ohm,5%,2W,AF,TP,3.9x	
....4	R827	2003-002009	R-METAL OXIDE(S);390ohm,5%,2W,AF,TP,3.9x	
....4	R403	2003-002151	R-METAL OXIDE;18KOHM,5%,2W,AG,TP,6X16MM	
....4	R402	2003-002178	R-METAL OXIDE(S);1Kohm,5%,2W,AG,TP,3.9x1	
....4	R024	2004-001371	R-METAL(S);1.5Kohm,1%,1/2W,AA,TP,2.4x6.4	
....4	R024	2004-001377	R-METAL(S);120Kohm,1%,1/2W,AA,TP,2.4x6.4	
....4	R024	2004-001402	R-METAL(S);6.8Kohm,1%,1/2W,AA,TP,2.4x6.4	
....4	R024	2004-001407	R-METAL(S);82.5Kohm,1%,1/2W,AA,TP,2.4x6.	
....4	R219	2004-001914	R-METAL;39Kohm,2%,1/8W,AA,TP,1.8x3.5mm	
....4	R024	2004-001983	R-METAL(S);2.49Kohm,1%,1/2W,AA,TP,2.4x6.	
....4	R304	2008-000252	R-FUSIBLE(S);0.47ohm,10%,1/2W,AF,TP,2.5x	
....4	R305	2008-000252	R-FUSIBLE(S);0.47ohm,10%,1/2W,AF,TP,2.5x	
....4	R420	2008-000264	R-FUSIBLE(S);1ohm,5%,1W,AF,TP,3.9x10mm	
....4	R421	2008-000266	R-FUSIBLE(S);1ohm,5%,2W,AF,TP,3.9x10mm	
....4	R825	2008-000266	R-FUSIBLE(S);1ohm,5%,2W,AF,TP,3.9x10mm	
....4	R303	2008-000290	R-FUSIBLE(S);2.4ohm,5%,2W,AF,TP,3.9x10mm	
....4	R302	2008-001076	R-FUSIBLE(S);1.8ohm,5%,2W,AF,TP,3.9x10mm	
....4	R505	2008-001138	R-FUSIBLE;2.4OHM,5%,1W,AF,TP,3.9X10MM	
⚠ 4	FD801S	2008-001163	R-PICO FUSIBLE;10mohm,20%,1W,AA,TP,2.3x6	
....4	C598	2201-000229	C-CERAMIC,DISC;0.15NF,10%,2KV,Y5P,TP,6.3	
....4	C598	2201-000259	C-CERAMIC,DISC;0.18NF,10%,500V,Y5P,TP,5.	
....4	C598	2201-000375	C-CERAMIC,DISC;0.22NF,5%,50V,RH,TP,12.5X	
....4	C598	2201-000573	C-CERAMIC,DISC;0.047NF,5%,50V,C0G,TP,5X3	
....4	C598	2201-000573	C-CERAMIC,DISC;0.047NF,5%,50V,C0G,TP,5X3	
....4	C598	2201-000599	C-CERAMIC,DISC;0.56NF,10%,500V,Y5P,TP,5.	
....4	C598	2201-000639	C-CERAMIC,DISC;0.68NF,10%,2KV,Y5P,TP,9X5	
....4	C598	2201-000723	C-CERAMIC,DISC;4.7NF,20%,3KV,Y5U,TP,16X5	
....4	C598	2201-002028	C-CERAMIC,DISC;0.47NF,10%,2KV,Y5P,TP,7.5	
....4	C689	2202-000127	C-CERAMIC,MLC-AXIAL;10nF,+80-20%,25V,Y5V	
....4	C689	2202-000127	C-CERAMIC,MLC-AXIAL;10nF,+80-20%,25V,Y5V	
....4	C689	2202-000127	C-CERAMIC,MLC-AXIAL;10nF,+80-20%,25V,Y5V	
....4	C689	2202-000231	C-CERAMIC,MLC-AXIAL;0.33NF,10%,50V,Y5P,T	
....4	C689	2202-000796	C-CERAMIC,MLC-AXIAL;1NF,10%,50V,Y5P,TP,3	
....4	C689	2202-000796	C-CERAMIC,MLC-AXIAL;1NF,10%,50V,Y5P,TP,3	
....4	C689	2202-000796	C-CERAMIC,MLC-AXIAL;1NF,10%,50V,Y5P,TP,3	
....4	C689	2202-000825	C-CERAMIC,MLC-AXIAL;680pF,10%,50V,Y5P,TP	
....4	C689	2202-002037	C-CERAMIC,MLC-AXIAL;100nF,80-20%,50V,Y5V	
....4	C2560	2301-000004	C-FILM,LEAD-PEF;2.2nF,5%,100V,TP,5.5X10X	
....4	C2560	2301-000004	C-FILM,LEAD-PEF;2.2nF,5%,100V,TP,5.5X10X	
....4	C2560	2301-000013	C-FILM,LEAD-PEF;4.7nF,5%,100V,TP,10.5x12	
....4	C2560	2301-000016	C-FILM,LEAD-PEF;22nF,5%,100V,TP,7.2x4.5x	
....4	C2560	2301-000016	C-FILM,LEAD-PEF;22nF,5%,100V,TP,7.2x4.5x	
....4	C2560	2301-000016	C-FILM,LEAD-PEF;22nF,5%,100V,TP,7.2x4.5x	
....4	C2560	2301-000110	C-FILM,LEAD-PEF;1.8nF,5%,100V,TP,7x3.0x6	
....4	C2560	2301-000148	C-FILM,LEAD-PEF;10nF,5%,100V,TP,7x3.2x7m	
....4	C2560	2301-000213	C-FILM,LEAD-PEF;220nF,5%,250V,TP,21.5x11	
....4	C2560	2301-000253	C-FILM,LEAD-PEF;39NF,5%,100V,TP,7.5X4.5X	
....4	C2560	2301-000289	C-FILM,LEAD-PEF;5.6nF,5%,50V,TP,7x6x3,5	
....4	C2560	2301-000301	C-FILM,LEAD-PEF;6.8nF,5%,50V,TP,6.5X5.5X	
....4	C2560	2301-000408	C-FILM,LEAD-PEF;2.7nF,5%,50V,TP,5.5x7x3m	
....4	C420	2301-001065	C-FILM,LEAD-PPF;47nF,5%,630V,TP,19x15.5x	
⚠ 4	CR403S	2301-001401	C-FILM,LEAD-PPF;27nF,5%,630V,TP,19x11x17	
....4	C225	2301-001664	C-FILM,LEAD-OTHER;100nF,3%,50V,TP,20x16x	
....4	C2560	2305-000149	C-FILM,LEAD-PEF;100nF,5%,100V,TP,12x12.5	
....4	C2560	2305-000178	C-FILM,LEAD-PEF;10nF,5%,100V,TP,-,5mm	
....4	C2560	2305-000285	C-FILM,LEAD-PEF;220NF,5%,100V,TP,10.5X5.	
....4	C2560	2305-000289	C-FILM,LEAD-PEF;220nF,5%,63V,TP,-,5mm	
....4	C2560	2305-000289	C-FILM,LEAD-PEF;220nF,5%,63V,TP,-,5mm	
....4	C2560	2305-000289	C-FILM,LEAD-PEF;220nF,5%,63V,TP,-,5mm	
....4	C2560	2305-000289	C-FILM,LEAD-PEF;220nF,5%,63V,TP,-,5mm	
....4	C2560	2305-000382	C-FILM,LEAD-PEF;4.7nF,5%,400V,TP,-,5mm	
....4	C2560	2305-000412	C-FILM,LEAD-PEF;470nF,5%,63V,TP,-,5mm	
....4	C2560	2305-000412	C-FILM,LEAD-PEF;470nF,5%,63V,TP,-,5mm	
....4	C2560	2305-000665	C-FILM,LEAD-PEF;100nF,5%,63V,TP,7.5x4.0x	
....4	C2560	2305-000665	C-FILM,LEAD-PEF;100nF,5%,63V,TP,7.5x4.0x	
....4	C2560	2305-000665	C-FILM,LEAD-PEF;100nF,5%,63V,TP,7.5x4.0x	
....4	C2560	2305-000665	C-FILM,LEAD-PEF;100nF,5%,63V,TP,7.5x4.0x	
....4	C2560	2305-000665	C-FILM,LEAD-PEF;100nF,5%,63V,TP,7.5x4.0x	
....4	C2560	2305-000665	C-FILM,LEAD-PEF;100nF,5%,63V,TP,7.5x4.0x	
....4	C2560	2305-000665	C-FILM,LEAD-PEF;100nF,5%,63V,TP,7.5x4.0x	
....4	C2560	2305-000665	C-FILM,LEAD-PEF;100nF,5%,63V,TP,7.5x4.0x	
....4	C2560	2305-000665	C-FILM,LEAD-PEF;100nF,5%,63V,TP,7.5x4.0x	
....4	C2560	2305-000665	C-FILM,LEAD-PEF;100nF,5%,63V,TP,7.5x4.0x	
....4	C2560	2305-000665	C-FILM,LEAD-PEF;100nF,5%,63V,TP,7.5x4.0x	
....4	C2560	2305-000665	C-FILM,LEAD-PEF;100nF,5%,63V,TP,7.5x4.0x	
....4	C2560	2305-000665	C-FILM,LEAD-PEF;100nF,5%,63V,TP,7.5x4.0x	
....4	C2560	2305-000665	C-FILM,LEAD-PEF;100nF,5%,63V,TP,7.5x4.0x	
....4	C2560	2305-000665	C-FILM,LEAD-PEF;100nF,5%,63V,TP,7.5x4.0x	
....4	C2560	2305-000665	C-FILM,LEAD-PEF;100nF,5%,63V,TP,7.5x4.0x	
....4	C2560	2305-000665	C-FILM,LEAD-PEF;100nF,5%,63V,TP,7.5x4.0x	
....4	C2560	2305-000665	C-FILM,LEAD-PEF;100nF,5%,63V,TP,7.5x4.0x	
....4	C2560	2305-000665	C-FILM,LEAD-PEF;100nF,5%,63V,TP,7.5x4.0x	
....4	C2560	2305-000665	C-FILM,LEAD-PEF;100nF,5%,63V,TP,7.5x4.0x	
⚠ 4	CR406S	2306-000171	C-FILM,LEAD-PPF;270nF,5%,250V,TP,21.5x12	
....4	C701	2401-000262	C-AL;100uF,20%,160V,HR,TP,16x25,7.5	
....4	C701	2401-000302	C-AL;100uF,20%,25V,GP,TP,6.3x11,5	
....4	C701	2401-000302	C-AL;100uF,20%,25V,GP,TP,6.3x11,5	
....4	C701	2401-000302	C-AL;100uF,20%,25V,GP,TP,6.3x11,5	
....4	C701	2401-000302	C-AL;100uF,20%,25V,GP,TP,6.3x11,5	
....4	C701	2401-000302	C-AL;100uF,20%,25V,GP,TP,6.3x11,5	
....4	C701	2401-000302	C-AL;100uF,20%,25V,GP,TP,6.3x11,5	
....4	C701	2401-000302	C-AL;100uF,20%,25V,GP,TP,6.3x11,5	
....4	C701	2401-000302	C-AL;100uF,20%,25V,GP,TP,6.3x11,5	
....4	C701	2401-000365	C-AL;100uF,20%,50V,WT,TP,10x12.5mm,	
....4	C701	2401-000365	C-AL;100uF,20%,50V,WT,TP,10x12.5mm,	
....4	C701	2401-000430	C-AL;10uF,20%,250V,GP,TP,10x16mm,5m	
....4	C701	2401-000480	C-AL;10uF,20%,50V,GP,TP,5x11,5	
....4	C701	2401-000480	C-AL;10uF,20%,50V,GP,TP,5x11,5	
....4	C701	2401-000480	C-AL;10uF,20%,50V,GP,TP,5x11,5	
....4	C701	2401-000480	C-AL;10uF,20%,50V,GP,TP,5x11,5	
....4	C701	2401-000493	C-AL;10uF,20%,50V,LZ,TP,5x11mm,5mm	
....4	C701	2401-000603	C-AL;1UF,20%,50V,GP,TP,5X11,2	
....4	C701	2401-000625	C-AL;2.2uF,20%,160V,GP,TP,6.3x11,5	
....4	C701	2401-000649	C-AL;2.2uF,20%,50V,BP,TP,5x11,5	
....4	C701	2401-000927	C-AL;22uF,20%,250V,GP,TP,13x20,5	
....4	C701	2401-000962	C-AL;22uF,20%,50V,GP,TP,5x11,5	
....4	C701	2401-001232	C-AL;4.7uF,20%,250V,GP,TP,10x12.5,5	
....4	C701	2401-001838	C-AL;470uF,20%,25V,WT,TP,10x16,5	
....4	C701	2401-001914	C-AL;1uF,20%,50V,BP,TP,5x11,5	
....4	C701	2401-001914	C-AL;1uF,20%,50V,BP,TP,5x11,5	
....4	C701	2401-001914	C-AL;1uF,20%,50V,BP,TP,5x11,5	
....4	C701	2401-001998	C-AL;1000uF,20%,25V,GP,TP,10x20,5mm	
....4	C701	2401-001998	C-AL;1000uF,20%,25V,GP,TP,10x20,5mm	
....4	C701	2401-002288	C-AL;470uF,20%,25V,WT,TP,10x20,5	
....4	C701	2401-002290	C-AL;47uF,20%,160V,GP,TP,13x20,5	
....4	C701	2401-002594	C-AL;220uF,20%,16V,GP,TP,8x11.5,5	
....4	C701	2401-002619	C-AL;47uF,20%,25V,GP,TP,5x11,5	
....4	C701	2401-002619	C-AL;47uF,20%,25V,GP,TP,5x11,5	
....4	C701	2401-003028	C-AL;100uF,20%,25V,WT,TP,6.3x11,5	
....4	C701	2401-003028	C-AL;100uF,20%,25V,WT,TP,6.3x11,5	
....4	C701	2401-003139	C-AL;1000uF,20%,25V,WT,TP,10*20,5mm	
....4	L810	2701-000002	INDUCTOR-AXIAL;100UH,10%,4298	
....4	L103	2701-000114	INDUCTOR-AXIAL;10UH,10%,2534	
....4	L202	2701-000114	INDUCTOR-AXIAL;10UH,10%,2534	
....4	L204	2701-000114	INDUCTOR-AXIAL;10UH,10%,2534	
....4	L801	2701-000114	INDUCTOR-AXIAL;10UH,10%,2534	
....4	R101	2701-000114	INDUCTOR-AXIAL;10UH,10%,2534	
....4	R102	2701-000114	INDUCTOR-AXIAL;10UH,10%,2534	
....4	L203	2701-000127	INDUCTOR-AXIAL;15UH,10%,2534	
....4	L301	2701-000142	INDUCTOR-AXIAL;1UH,10%,2534	
....4	L302	2701-000142	INDUCTOR-AXIAL;1UH,10%,2534	
....4	L404	2701-000142	INDUCTOR-AXIAL;1UH,10%,2534	
....4	L230	2701-000159	INDUCTOR-AXIAL;22UH,10%,4298	
....4	L201	2701-000163	INDUCTOR-AXIAL;27UH,10%,3070	
....4	L205	2701-000177	INDUCTOR-AXIAL;33UH,10%,2534	
....4	L206	2701-000177	INDUCTOR-AXIAL;33UH,10%,2534	
....4	L307	2701-000178	INDUCTOR-AXIAL;33UH,10%,3070	
....4	L804	2701-001030	INDUCTOR-AXIAL;43UH,10%,4514	
....4	L303	2701-001034	INDUCTOR-AXIAL;22UH,10%,4514	
....4	L304	2701-001034	INDUCTOR-AXIAL;22UH,10%,4514	
....4	F101	2901-000297	FILTER-EMI ON BOARD;-,3A,-,-,3.5x5,TP,-	
....4	F101	2901-000299	FILTER-EMI ON BOARD;-,6A,UL/CSA,-,9x7.5,	
....4	Z201	2903-000129	FILTER-CERAMIC;BR,4.5MHz,-,-,-,TP,-	
....4	L2514	3301-001223	BEAD-AXIAL;62ohm,3.5x0.8x5mm,,TP,,,	
....4	L2514	3301-001223	BEAD-AXIAL;62ohm,3.5x0.8x5mm,,TP,,,	
....4	L2514	3301-001223	BEAD-AXIAL;62ohm,3.5x0.8x5mm,,TP,,,	
....4	L2514	3301-001223	BEAD-AXIAL;62ohm,3.5x0.8x5mm,,TP,,,	
....4	L2514	3301-001223	BEAD-AXIAL;62ohm,3.5x0.8x5mm,,TP,,,	
....4	L2514	3301-001223	BEAD-AXIAL;62ohm,3.5x0.8x5mm,,TP,,,	
....4	SW201	3404-001252	SWITCH-TACT;12VDC,50MA,130GF,7.5X7.1,1	
....4	SW202	3404-001252	SWITCH-TACT;12VDC,50MA,130GF,7.5X7.1,1	
....4	SW203	3404-001252	SWITCH-TACT;12VDC,50MA,130GF,7.5X7.1,1	
....4	SW204	3404-001252	SWITCH-TACT;12VDC,50MA,130GF,7.5X7.1,1	
....4	SW205	3404-001252	SWITCH-TACT;12VDC,50MA,130GF,7.5X7.1,1	
....4	F801A	3602-000114	FUSE-HOLDER;-,-,30mohm	
....4	F801B	3602-000114	FUSE-HOLDER;-,-,30mohm	
....4	CN906	3711-002643	CONNECTOR-HEADER;BOX,4P,1R,2.5mm,STRAIGH	
....4	EL301	6042-000001	EYELET;ID2.2,OD2.7,L3.1,NI+SN,BSP3-1/2H	S.N.A
....4	EL302	6042-000001	EYELET;ID2.2,OD2.7,L3.1,NI+SN,BSP3-1/2H	S.N.A

Level	Loc.No.	Code No.	Description;Specification	Remark
....4	EL402	6042-000001	EYELET;ID2.2,OD2.7,L3.1,NI+SN,BSP3-1/2H	S.N.A
....4	EL601	6042-000001	EYELET;ID2.2,OD2.7,L3.1,NI+SN,BSP3-1/2H	S.N.A
....4	EL602	6042-000001	EYELET;ID2.2,OD2.7,L3.1,NI+SN,BSP3-1/2H	S.N.A
....4	EL801	6042-000001	EYELET;ID2.2,OD2.7,L3.1,NI+SN,BSP3-1/2H	S.N.A
....4	EL802	6042-000001	EYELET;ID2.2,OD2.7,L3.1,NI+SN,BSP3-1/2H	S.N.A
....4	EY401	6042-000002	EYELET;ID1.5,OD2,L2.8,NI+SN,BSP3-1/2H	S.N.A
....4	EY402	6042-000002	EYELET;ID1.5,OD2,L2.8,NI+SN,BSP3-1/2H	S.N.A
....4	EY403	6042-000002	EYELET;ID1.5,OD2,L2.8,NI+SN,BSP3-1/2H	S.N.A
....4	EY404	6042-000002	EYELET;ID1.5,OD2,L2.8,NI+SN,BSP3-1/2H	S.N.A
....4	EY405	6042-000002	EYELET;ID1.5,OD2,L2.8,NI+SN,BSP3-1/2H	S.N.A
....4	EY406	6042-000002	EYELET;ID1.5,OD2,L2.8,NI+SN,BSP3-1/2H	S.N.A
....4	EY407	6042-000002	EYELET;ID1.5,OD2,L2.8,NI+SN,BSP3-1/2H	S.N.A
....4	EY408	6042-000002	EYELET;ID1.5,OD2,L2.8,NI+SN,BSP3-1/2H	S.N.A
....4	EY409	6042-000002	EYELET;ID1.5,OD2,L2.8,NI+SN,BSP3-1/2H	S.N.A
....4	EY410	6042-000002	EYELET;ID1.5,OD2,L2.8,NI+SN,BSP3-1/2H	S.N.A
....4	EY411	6042-000002	EYELET;ID1.5,OD2,L2.8,NI+SN,BSP3-1/2H	S.N.A
....4	EY412	6042-000002	EYELET;ID1.5,OD2,L2.8,NI+SN,BSP3-1/2H	S.N.A
....4	EY413	6042-000002	EYELET;ID1.5,OD2,L2.8,NI+SN,BSP3-1/2H	S.N.A
....4	EY414	6042-000002	EYELET;ID1.5,OD2,L2.8,NI+SN,BSP3-1/2H	S.N.A
....4	EY416	6042-000002	EYELET;ID1.5,OD2,L2.8,NI+SN,BSP3-1/2H	S.N.A
....4	EY417	6042-000002	EYELET;ID1.5,OD2,L2.8,NI+SN,BSP3-1/2H	S.N.A
....4	EY419	6042-000002	EYELET;ID1.5,OD2,L2.8,NI+SN,BSP3-1/2H	S.N.A
....4	EY501	6042-000002	EYELET;ID1.5,OD2,L2.8,NI+SN,BSP3-1/2H	S.N.A
....4	EY701	6042-000002	EYELET;ID1.5,OD2,L2.8,NI+SN,BSP3-1/2H	S.N.A
....4	EY702	6042-000002	EYELET;ID1.5,OD2,L2.8,NI+SN,BSP3-1/2H	S.N.A
....4	EY801	6042-000002	EYELET;ID1.5,OD2,L2.8,NI+SN,BSP3-1/2H	S.N.A
....4	EY802	6042-000002	EYELET;ID1.5,OD2,L2.8,NI+SN,BSP3-1/2H	S.N.A
....4	EY803	6042-000002	EYELET;ID1.5,OD2,L2.8,NI+SN,BSP3-1/2H	S.N.A
....4	EY804	6042-000002	EYELET;ID1.5,OD2,L2.8,NI+SN,BSP3-1/2H	S.N.A
....4	EY805	6042-000002	EYELET;ID1.5,OD2,L2.8,NI+SN,BSP3-1/2H	S.N.A
....4	EY806	6042-000002	EYELET;ID1.5,OD2,L2.8,NI+SN,BSP3-1/2H	S.N.A
....4	EY807	6042-000002	EYELET;ID1.5,OD2,L2.8,NI+SN,BSP3-1/2H	S.N.A
....4	EY808	6042-000002	EYELET;ID1.5,OD2,L2.8,NI+SN,BSP3-1/2H	S.N.A
....4	EY813	6042-000002	EYELET;ID1.5,OD2,L2.8,NI+SN,BSP3-1/2H	S.N.A
....4	EY814	6042-000002	EYELET;ID1.5,OD2,L2.8,NI+SN,BSP3-1/2H	S.N.A
....4	EY815	6042-000002	EYELET;ID1.5,OD2,L2.8,NI+SN,BSP3-1/2H	S.N.A
....4	EY816	6042-000002	EYELET;ID1.5,OD2,L2.8,NI+SN,BSP3-1/2H	S.N.A
....4	EY817	6042-000002	EYELET;ID1.5,OD2,L2.8,NI+SN,BSP3-1/2H	S.N.A
....4	EY818	6042-000002	EYELET;ID1.5,OD2,L2.8,NI+SN,BSP3-1/2H	S.N.A
....4	EY819	6042-000002	EYELET;ID1.5,OD2,L2.8,NI+SN,BSP3-1/2H	S.N.A
....4	EY820	6042-000002	EYELET;ID1.5,OD2,L2.8,NI+SN,BSP3-1/2H	S.N.A
....4	EY821	6042-000002	EYELET;ID1.5,OD2,L2.8,NI+SN,BSP3-1/2H	S.N.A
....4	EY822	6042-000002	EYELET;ID1.5,OD2,L2.8,NI+SN,BSP3-1/2H	S.N.A
....4	EY827	6042-000002	EYELET;ID1.5,OD2,L2.8,NI+SN,BSP3-1/2H	S.N.A
....4	EY830	6042-000002	EYELET;ID1.5,OD2,L2.8,NI+SN,BSP3-1/2H	S.N.A
....4	EY833	6042-000002	EYELET;ID1.5,OD2,L2.8,NI+SN,BSP3-1/2H	S.N.A
....4	FT401	AA37-00001A	CONNECTOR-FBT FIX PIN;JM-3500,CPTTV,0.36	
....4	FT402	AA37-00001A	CONNECTOR-FBT FIX PIN;JM-3500,CPTTV,0.36	
....4	GT501	AA60-40014A	PIN-GT,ASSY;AUTO	S.N.A
....4	GT801	AA60-40014A	PIN-GT,ASSY;AUTO	S.N.A
....4	GT802	AA60-40014A	PIN-GT,ASSY;AUTO	S.N.A
....4	GT803	AA60-40014A	PIN-GT,ASSY;AUTO	S.N.A
....4	GT804	AA60-40014A	PIN-GT,ASSY;AUTO	S.N.A
....4	GT805	AA60-40014A	PIN-GT,ASSY;AUTO	S.N.A
....4	CN906	3711-002646	CONNECTOR-HEADER;BOX,7P,1R,2.5mm,STRAIGH	
....4	DZ016	0403-000699	DIODE-ZENER;TZP27B,27-30.8V,1000MW,DO-41	
....4	IC012	1203-002951	IC-POSI.ADJUST REG.;SL431A,TO-92,3P,-,PL	
....4	R075	2001-001154	R-CARBON(S);5.1KOHM,5%,1/2W,AA,TP,2.4X6.	
....4	R801	2003-000994	R-METAL OXIDE(S);33Kohm,5%,2W,AF,TP,3.9x	
....4	R804	2003-000994	R-METAL OXIDE(S);33Kohm,5%,2W,AF,TP,3.9x	
....4	R824	2008-001033	R-FUSIBLE(S);10ohm,5%,2W,AF,TP,3.9x10mm	
....4	C598	2201-000108	C-CERAMIC,DISC;1.5NF,10%,1KV,Y5P,TP,10X5	
....4	C598	2201-000991	C-CERAMIC,DISC;0.56NF,10%,2KV,Y5P,TP,7.5	
....4	C701	2401-000015	C-AL;33uF,20%,50V,WT,-,6.3x11mm,2.5	
....4	L2514	3301-000287	BEAD-AXIAL;,3.5x1.0x6.0mm,3000mA,TP,,,50	
....4	R125	2001-000429	R-CARBON;1KOHM,5%,1/8W,AA,TP,1.8X3.2MM	
....4	R075	2001-001105	R-CARBON(S);20OHM,5%,1/2W,AA,TP,2.4X6.4M	
....4	R075	2001-001105	R-CARBON(S);20OHM,5%,1/2W,AA,TP,2.4X6.4M	
....4	0	AA41-01026B	PCB MAIN;CT-21M16,FR-1,B,245 X 245,KS9A,	S.N.A
...3	JA701	3722-002140	JACK-PIN;2P(9P),Ni,YEL/WHT,ANGLE	
⚠...3	IC801S	AA96-00242D	ASSY HEAT SINK P;SCREWAA62-30186B,5Q0765	S.N.A
....4	CIS	0205-001154	OIL-SILICON;G746,-,-	S.N.A
....4	T0086	1203-002916	IC-PWM CONTROLLER;KA5Q0765RTH-YDTU,TO-22	
....4	T0081	6003-000333	SCREW-TAPTITE;RH,+,2S,M3,L10,ZPC(YEL),SW	S.N.A
....4	CIS	AA62-30186B	HEAT SINK-ES;-,-,-,-,SILVER,171J + COVER-H	S.N.A
....4	CIS	AA63-30189A	COVER-HEATSINK;-,PC-ABS,T0.8,-,-,V0,NTR,	S.N.A
⚠...3	RL801S	3501-001053	RELAY-POWER;5VDC,530MW,10000MA,1FORMA,15	

Level	Loc.No.	Code No.	Description;Specification	Remark
..2	T0091	AA94-14821A	ASSY PCB MISC-A/V SIDE;CL21N11MJZXXAX,KS	
...3		0202-001366	SOLDER-WIRE FLUX;-,RS60S,D1.2,63Sn/37Pb,	S.N.A
...3	JA703	3722-001367	JACK-PIN;1P,3.4MM,AU,YEL,-	
...3	JA704	3722-001368	JACK-PIN;1P,3.4MM,AU,WHT,-	
...3	T0081	6003-001023	SCREW-TAPTITE;PWH,+,B,M3,L10,ZPC(YEL),SW	S.N.A
...3		AA97-15571A	ASSY AUTO-A/V SIDE;CL21N11MJZXXAX,KS9A	S.N.A
....4	0	AA41-00945A	PCB AV;14F10,1,A,245*245,K15D,15,SIDE-A/	S.N.A
...3	T0245	AA39-20070A	LEAD CONNECTOR-ASSY;,7P,300,YBNH025-07,6	
...3	T0011	AA61-00728J	HOLDER-AV ASSY;17N11,HIPS HB,G4309,SV012	S.N.A
....4	T0010	AA61-00619D	HOLDER-AV;17N11,HIPS HB,G4309,SV012P	S.N.A
....4	T0578	AA64-01729B	INLAY AV;21F5,PS SHEET,T0.3,-,-,BLK,KS1A	S.N.A

ASSY ACCESSORY

1	M0045	AA92-08932B	ASSY ACCESSORY;CL21N11MJZXXAX,KS9A	S.N.A
..2	0	6801-001197	CARD INFORMATION;MEXICO,SEM,sp,W/P,120g,	S.N.A
..2		6902-000009	BAG PE;HDPE,T0.03,L400,W240,TRP,8,2,PE M	S.N.A
..2	T0080	AA26-90001F	TRANS MATCHING;-,300ohm/75ohm,NTSC,40-89	
..2	T0075	AA42-00003A	ANT ROD;-,3S,720mm,ABS,UL/CSA,-	
..2	T0074	AA59-00316C	REMOCON;TM75,ET,30,G6148A,NT,EX	
..2	T0152	AA68-00559C	CARD WARRANTY;-,-,W/P150(G),-,138X212,-,	S.N.A
..2		AA68-00560A	CARD-SVC NETWORK;-,W/P100(G),-,-,SEM,1',	S.N.A
..2	0	AA68-03242B	MANUAL-WARRANTY CARD;TH-ENG,SAFETY GUIDE	S.N.A
..2	M0596	AA68-03287A	MANUAL USERS-00;CL21M16,LATIN,EN,W/P120g	S.N.A
..2	M0596	AA68-03368A	MANUAL USERS-00;CL21M16,LATIN,SPA,W/P120	S.N.A

ASSY P/MATERIAL

1		AA92-08953A	ASSY P/MATERIAL;21N11	S.N.A
..2		6902-000001	BAG AIR;LDPE,T0.2,L1800,W1000,TRP,,,LDPE	S.N.A
..2		6902-000005	BAG PE;HDPE/NITRON/HDPE,T0.015/T0.5/T0.0	S.N.A
..2	T0214	AA60-40006A	PIN-STAPLE;AUTO,33X17.8X2.4,H18,33X17.8X	S.N.A
..2		6902-000061	BAG AIR;LDPE,T0.2,L1000,W500,TRP,,,	S.N.A