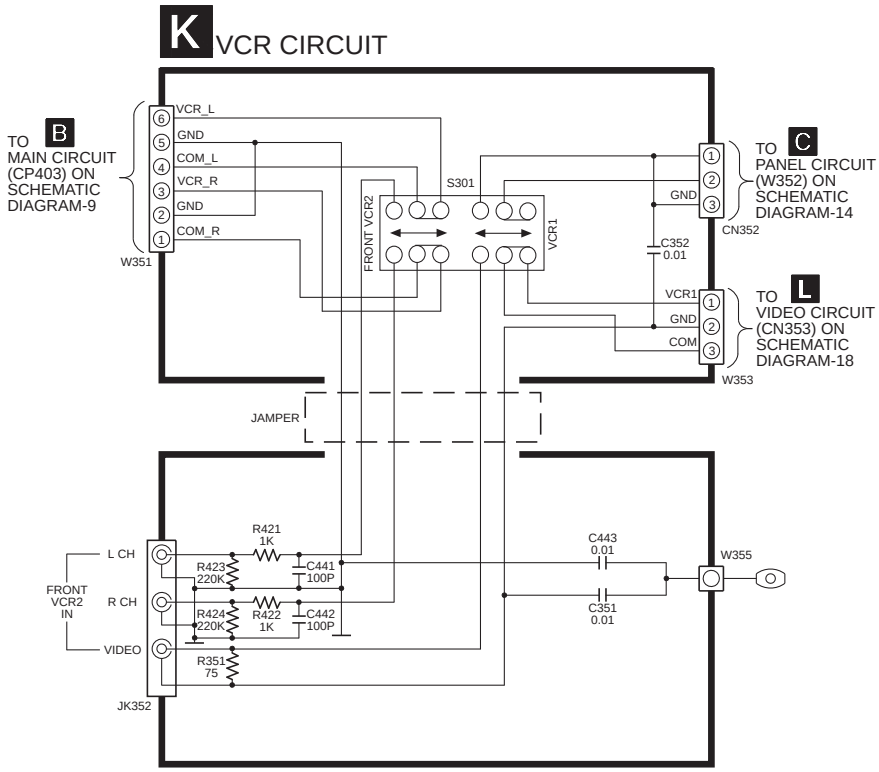SCHEMATIC DIAGRAM-17