Workshop Manual

up! 2012 ➤
up! 2017 ➤
up! 2020 ➤

3-cylinder injection engine (1.0 l engine, 4 V, EA 211)									
Engine ID	CHY A	CHY B	DAF A	CHY E					

Edition 02.2021

List of Workshop Manual Repair Groups

Repair Group

Technical information should always be available to the foremen and mechanics, because their careful and constant adherence to the instructions is essential to ensure vehicle road-worthiness and safety. In addition, the normal basic safety precautions for working on motor vehicles must, as a matter of course, be observed.

Contents

00 – Technical data

1 Safety information

(VRL015199; Edition 02.2021)

⇒ r1.1 egulations for working on fuel supply", page 1

⇒ m1.2 easures when working on vehicles with a start/stop system", page 1

⇒ p1.3 recautions when using testers and measuring instruments during a road test", page 2

⇒ p1.4 recautions when working on the cooling system", page 2

⇒ p1.5 recautions when working on ignition system", page 2

1.1 Safety regulations for working on fuel supply

Risk of injury from highly pressurised fuel.

The fuel system is pressurised. Injury from fuel spray possible.

Before opening the fuel system:

– Wear protective goggles.

– Wear protective gloves.

– To release pressure, wrap a clean cloth around the connection and carefully loosen the connection.

Danger of fire caused by escaping fuel

When the battery is connected and the driver door opens, the door contact switch activates the fuel pump. Escaping fuel can ignite and cause a fire.

– Disconnect voltage supply to fuel pump before opening the fuel system.

1.2 Safety measures when working on vehicles with a start/stop system

Risk of injury due to unexpected motor start

If the vehicle's start/stop system is activated, the engine could start unexpectedly. A message in the dash panel insert indicates whether the start/stop system is activated.

– Deactivate start/stop system by switching off the ignition.

1.3 Safety precautions when using testers and measuring instruments during a road test

Risk of injury caused by unsecured testing and measuring instruments

When the front passenger airbag is triggered in an accident, insufficiently secured testing and measuring instruments become dangerous projectiles.

– Secure testing and measuring instruments on the rear seat.

or

– Have a second person operate the test and measuring equipment on the rear seat.

1.4 Safety precautions when working on the cooling system

Danger of scalding by hot coolant

On a warm engine, the cooling system is under high pressure. Danger of scalding by steam and hot coolant.

– Wear protective gloves.

– Wear protective goggles.

– Reduce excess pressure by covering cap of coolant expansion tank with cloths and opening it carefully.

1.5 Safety precautions when working on ignition system

Risk of injury due to electric shock

The ignition system is under high voltage when the engine is running. Touching the ignition system may result in an electric shock.

– Do not touch or disconnect ignition cables when the engine is running or being turned at starter speed.

Risk of damage to components

Connecting or disconnecting electric cables or washing the engine while it is running may damage components.

– Switch off the ignition before connecting or disconnecting electric cables.

– Switch off the ignition before washing the engine.

2 Identification

⇒ n2.1 umber/engine data", page 3

2.1 Engine number/engine data

The engine code and the engine number can be found on the sticker -arrow- on the upper toothed belt guard.

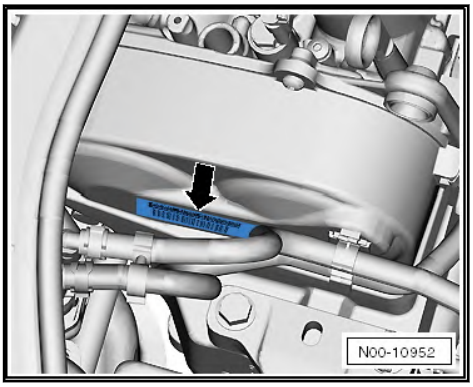

The engine code is also on the vehicle data sticker and on the crankcase above the gearbox.

The engine number consists of up to 9 characters (alphanumeric). The first part (maximum 3 characters) makes up the "engine code", and the second part (6 characters), the "serial number". If more than 999,999 engines were produced with the same code letters, the first of the six digits is replaced by a letter.

Vehicles with four digit engine codes

Four-place engine codes are being introduced, starting with letter "C". The first 3 places show the mechanical design of engine and are stamped on the engine as previously. The fourth digit denotes the performance and torque rating of the engine and depends on the engine control unit -J623-. The four-digit engine code can be found on the identification plate, the vehicle data sticker and the engine control unit.

Note

Fitting locations of vehicle data sticker ⇒ Maintenance; Booklet ; Vehicle data sticker.

Engine code		CHYA	DAFA	CHYB	CHYE
Manufactured		11.2011 ►	11.2014 ►	11.2011 ►	08.2019
Exhaust emission standard		EU5/EU6	C5 stage 2	EU5/EU6	EU 6
Displacement	cm^3	999	999	999	999
Power	kW at rpm	44/5000-6000	44/5500	55/6200	44/5000-5500
Torque	Nm at rpm	95/3000-4300	95/4000	95/3000-4300	95/3000-4300
Bore	∅ mm	74.5	74.5	74.5	74.5
Stroke	mm	76.4	76.4	76.4	76.4
Compression ratio		10.5	10.5	10.5	10.5
Valves per cylinder		4	4	4	4

Engine code	CHYA	DAFA	CHYB	CHYE
RON min.	95 unleaded (in exceptional circumstances min. 91 RON but with reduced performance)	95 unleaded (in exceptional circumstances min. 91 RON but with reduced performance)	95 unleaded (in exceptional circumstances min. 91 RON but with reduced performance)	95 unleaded (in exceptional circumstances min. 91 RON but with reduced performance)
Injection, ignition system	Motronic ME 17	Motronic ME 17	Motronic ME 17	Motronic ME 17
Firing order	1-2-3	1-2-3	1-2-3	1-2-3

3 Repair instructions

3.1 Rules for cleanliness

When working on the fuel supply and injection system, pay particular attention to the following rules for cleanliness:

- Thoroughly clean all connections and adjacent areas before disconnecting.
- Place removed parts on a clean surface and cover them over. Use lint-free cloths only.
- Carefully cover opened components or seal them if repairs cannot be carried out immediately.
- Install clean components only. Do not remove replacement parts from packing until immediately before installing. Do not use parts that have been kept unpackaged (for example in toolboxes).
- If system is open, do not work with compressed air. Do not move the vehicle.

3.2 Foreign objects in engine

To prevent the ingress of foreign bodies during work on the engine, seal open channels of the intake and exhaust sections with suitable plugs, for example from the engine bung set -VAS 6122-.

3.3 Contact corrosion

Contact corrosion can occur if non-approved fasteners are used on the vehicle (bolts, nuts, washers etc.).

For this reason, only connecting elements with a special surface coating have been fitted.

In addition, rubber, plastic and adhesives are made of non-conductive materials.

If there is any doubt about the suitability of parts, a general rule is to use new parts ⇒ Electronic Parts Catalogue (ETKA).

3.4 Routing and attachment of lines

- In order to ensure that lines are all installed in their original position, the lines for the fuel, hydraulic and vacuum systems and for the activated charcoal filter system as well as electrical wires must be marked appropriately before they are removed. Where necessary, make sketches or take photographs.
- Because of the lack of space in the engine compartment, make sure that there is sufficient clearance between lines and all moving or hot components. This is to avoid damage to lines.
- Any clips, cable ties or other fastening devices that have been cut through or damaged when loosening must be renewed.

- Insulation mats and other insulating devices must always be re-fitted in their original positions.

3.5 Fitting radiator and condensers

Even if installed correctly, the radiator, the condenser and the charge air cooler may have small dents in their fins. This does not mean that these components have been damaged. It is not permissible to renew radiators, condensers or charge air coolers only because of such minor dents.

10 – Removing and installing engine

1 Removing and installing engine

⇒ e1.1 ngine", page 7
⇒ e1.2 ngine and gearbox", page 14
⇒ e1.3 ngine on engine and gearbox support", page 16
⇒ e1.4 ngine", page 18

1.1 Removing engine

Special tools and workshop equipment required

- Engine support -T10483-

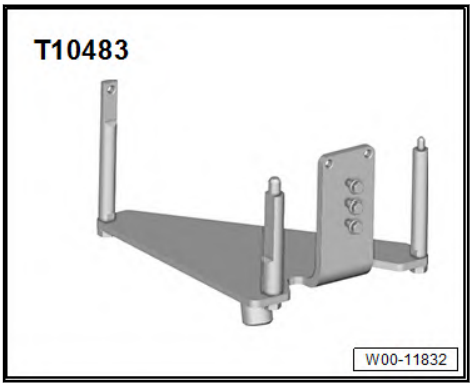

- Drip tray for workshop hoist -VAS 6208-

- Engine and gearbox support -VAS 6095-

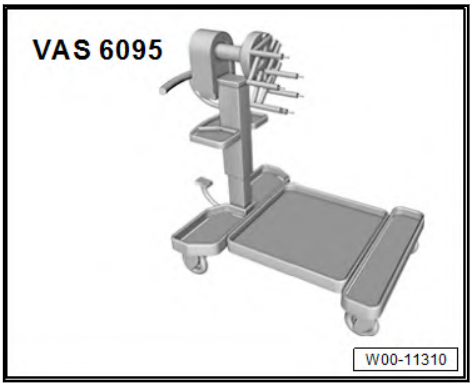

- Hose clamp pliers -VAS 6340-

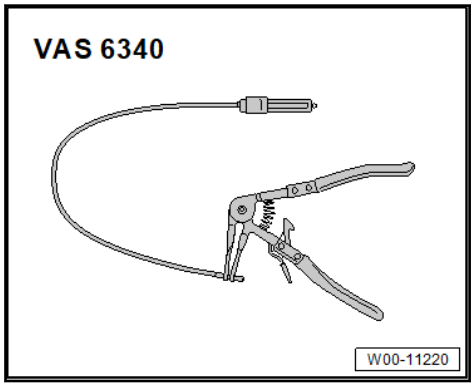

- Adapter -T10480-

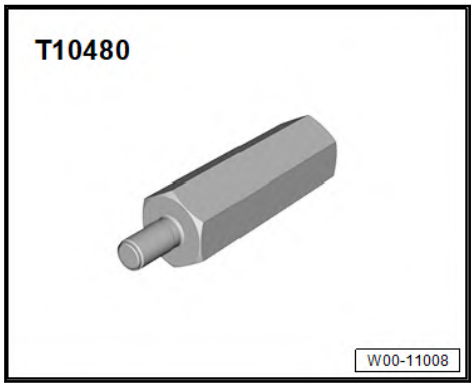

- Commercially available stepladder (not illustrated)

Note

The engine is removed downwards with gearbox.

– Check whether a coded radio is fitted. Obtain anti-theft coding beforehand if necessary.

– Disconnect battery ⇒ Electrical system; Rep. gr. 27; Battery; Disconnecting and connecting battery.

– Remove battery and battery tray ⇒ Electrical system; Rep. gr. 27; Battery; Removing and installing battery

– Detach or cut open cable tie.

– Remove air filter housing ⇒ a3.2 nd installing air filter housing", page 260 .

– Remove engine control unit ⇒ a6.2 nd installing engine control unitJ623", page 274 .

– Unclip the wiring harness from the fastening points and attach it to the engine.

– Open and close coolant expansion tank cap to release pressure in cooling system.

– Release and pull off fuel supply line -1- and breather line -2-.⇒ Rep. gr. 20; Plug-in connectors; Disconnecting plug-in connectors.

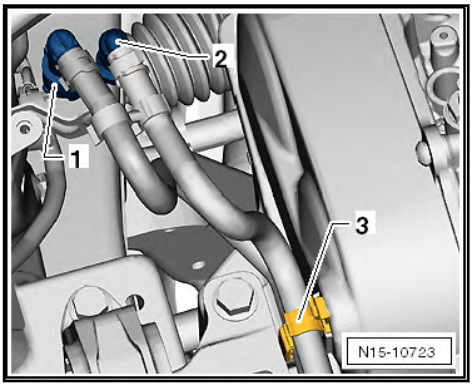

– Open line guide -3- and remove hoses.
– Seal lines so that fuel system is not contaminated by dirt.
– Drain coolant ⇒ a1.3 nd adding coolant", page 198 .
– Disconnect all coolant hoses -1- from coolant pump.

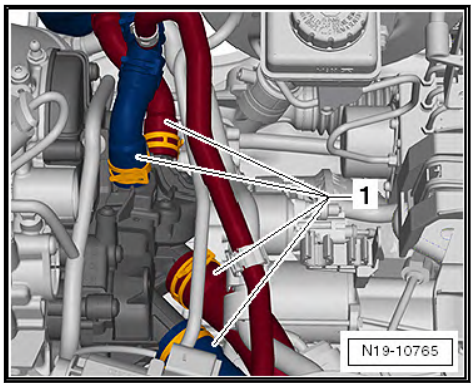

– Pull off connector -1- from expansion tank.
– While pushing locking tabs in -direction of arrow- pull expansion tank upwards.

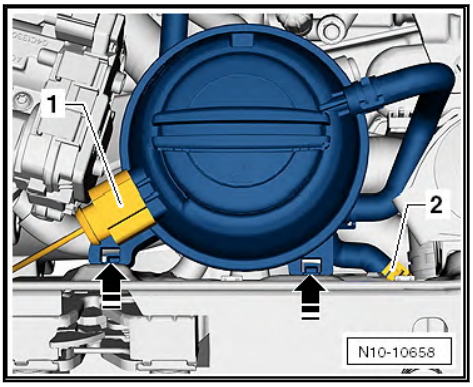

– Pull off coolant hose -2-.
– Disconnect connector -arrow- and unclip line guide.

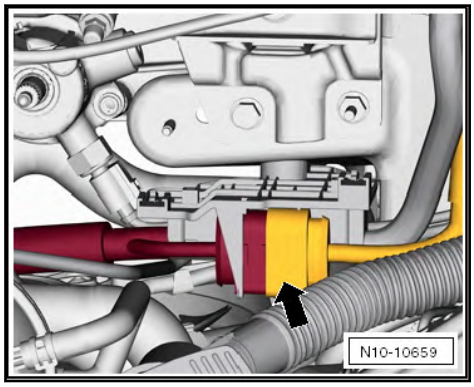

– Disconnect connectors of Lambda probe -arrows-.

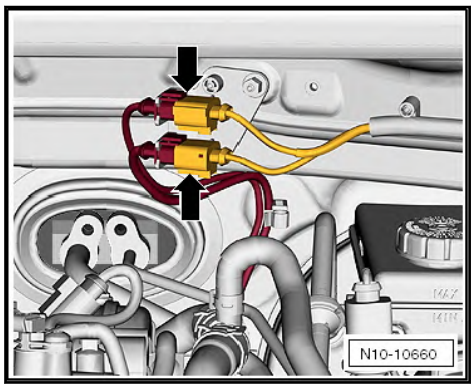

– Remove selector mechanism from gearbox: ⇒ Rep. gr. 34; Selector mechanism; Overview - selector mechanism

Remove starter ⇒ Electrical system; Rep. gr. 27; Starter; Removing and installing starter.

– Remove clutch slave cylinder: ⇒ Rep. gr. 30; Clutch slave cylinder; Removing and installing clutch slave cylinder

Vehicles with air conditioning system

Note

- *The air conditioning system lines must not be opened.*
- *Prevent damage to condenser and refrigerant lines and hoses.*
- *Do NOT stretch, kink or bend lines and hoses.*

– Remove poly V-belt ⇒ a1.3 nd installing poly-V belt", page 38 .

– Remove air conditioner compressor: ⇒ Heating, air conditioning; Rep. gr. 87; Air conditioner compressor; Removing and installing air conditioner compressor.

– Secure air conditioner compressor on lock carrier.

Make sure lines are not kinked.

Continued for all vehicles

– Unscrew securing bolts -1-.

– Unscrew fastening bolt from catalytic converter and remove bracket -2-.

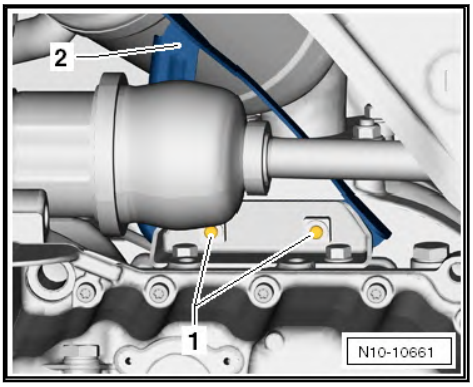

– Remove securing nuts -arrows- and pull catalytic converter off stud bolts.

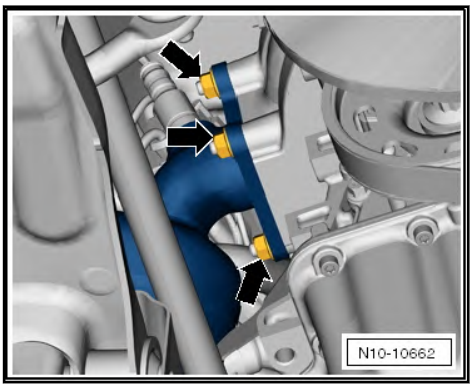

– Remove securing bolts -arrows- of pendulum support.

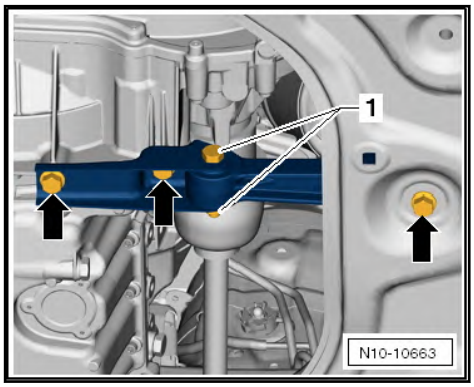

Note

The threaded connection -1- must not be loosened.

– Remove right and left drive shaft ⇒ Running gear, axles, steering; Rep. gr. 40; Drive shaft; Removing and installing drive shaft.

– Bring lock carrier into service position ⇒ General body repairs, exterior; Rep. gr. 50; Lock carrier.

On right in direction of travel

– Connect and install 2 adapters -T10480- -1- and -2- at each of the two positions.

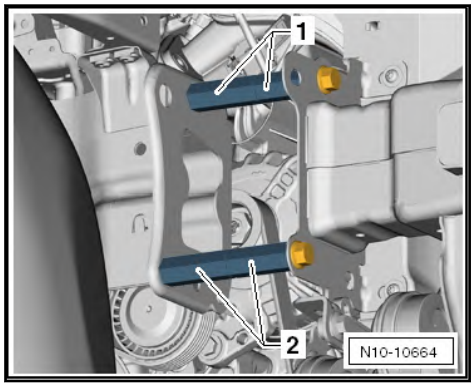

On left in direction of travel

– Install one adapter -T10480- -1- and -2- at each of the two positions.

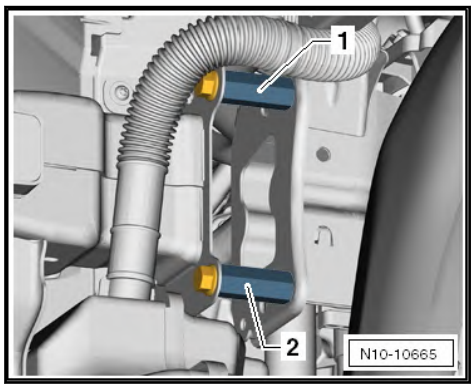

Engine support -T10483- with adapters -/1-, -/2- and -/3- is required to lower engine and gearbox.

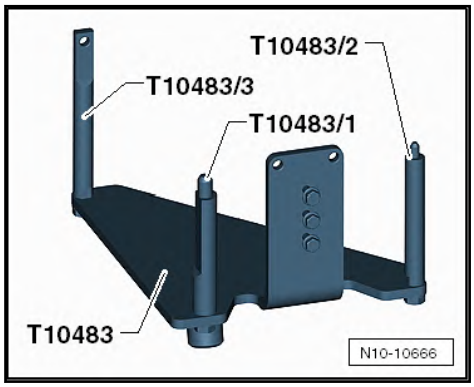

– Push engine support -T10483- into crankcase holes -arrows- to stop.

– Tighten bolts -1- by hand first.

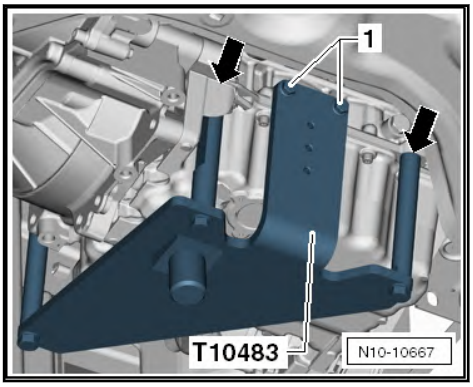

– At first, tighten bolt -arrow- hand-tight.

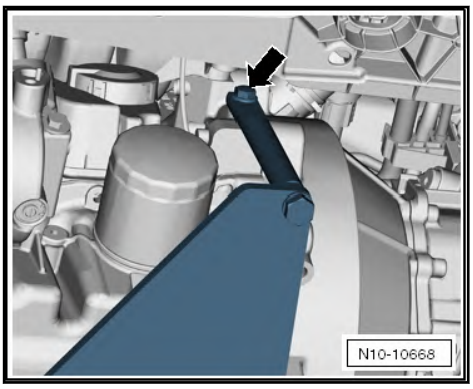

– Tighten bolts -arrows- to 20 Nm.
– Also tighten all remaining bolts to 20 Nm.
– Position engine and gearbox jack -V.A.G 1383 A- on engine support -T10416-.

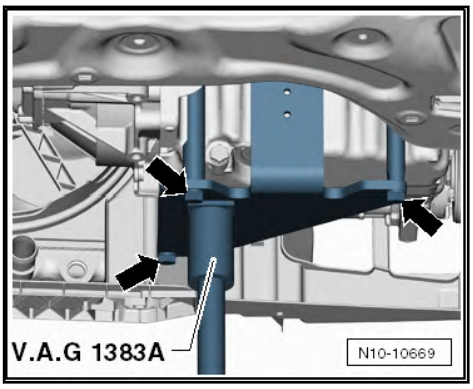

– Lift engine and gearbox slightly using engine and gearbox jack -V.A.G 1383 A-.

Note

To remove securing bolts use a stepladder -VAS 5085-.

– Unscrew earth wire -1-.

Unscrew securing bolts -arrows- and remove assembly mounting on engine side.

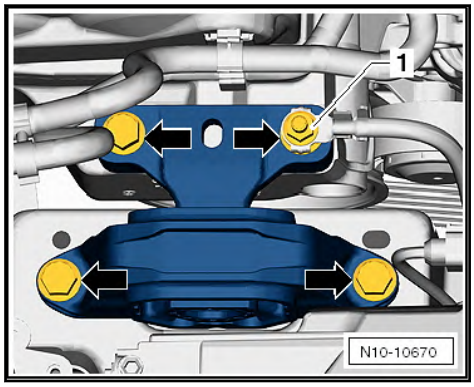

– Unscrew assembly mounting on gearbox side -arrows-.

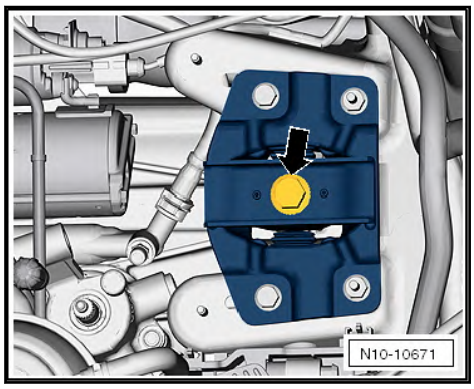

Note

When lifted out, the engine/gearbox assembly must be carefully guided to prevent damage to the bodywork.

– Carefully lower engine and gearbox.

Secure engine to engine and gearbox support -VAS 6095- to carry out repairs.

1.2 Separating engine and gearbox

Special tools and workshop equipment required

♦ Shackle -10-222A/12-

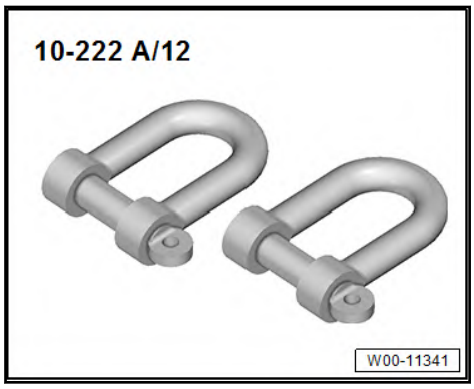

♦ Workshop hoist -VAS 6100-

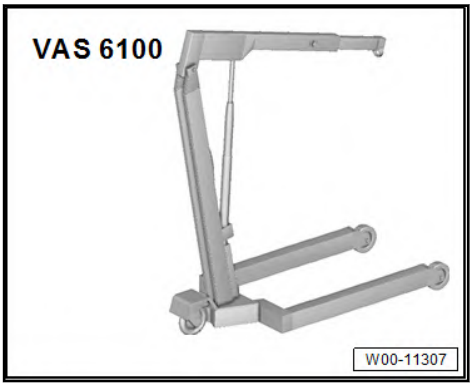

♦ Lifting tackle -2024A-

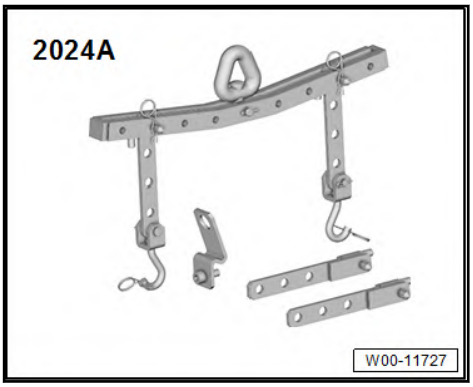

Procedure

- Engine/gearbox assembly removed and attached to engine bracket -T10483-.

– Detach one hook from lifting tackle -2024A-.

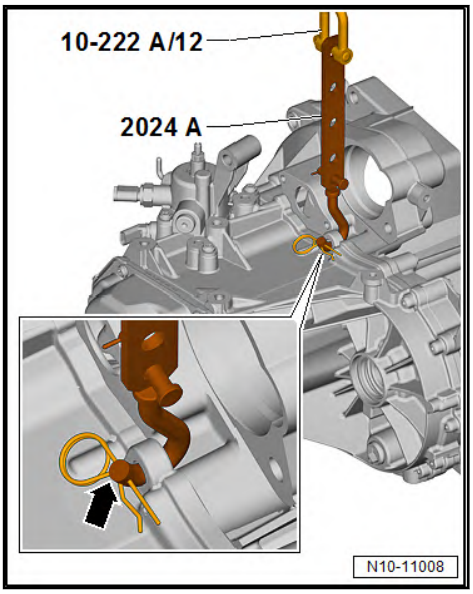

– Fit hook of lifting tackle -2024A- to gearbox as shown in illustration, and secure connection with a split pin -arrow-.

– Attach shackle -10-222A/12- to hook.

– Attach workshop hoist -VAS 6100- to shackle -10-222A/12-.

– Raise gearbox slightly with workshop hoist -VAS 6100-.

– Unscrew bolts -1, 2, 3-.

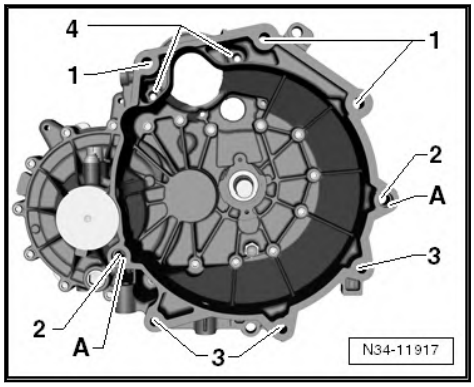

Note

Disregards items -4- and -A-.

– Pull gearbox off engine.

1.3 Securing engine on engine and gearbox support

Special tools and workshop equipment required

♦ Lifting tackle -2024 A-

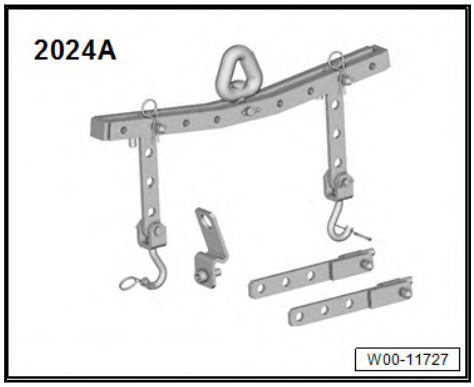

♦ Engine and gearbox support -VAS 6095-

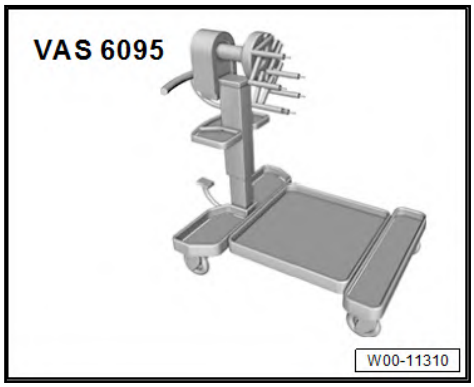

- Workshop hoist -VAS 6100-

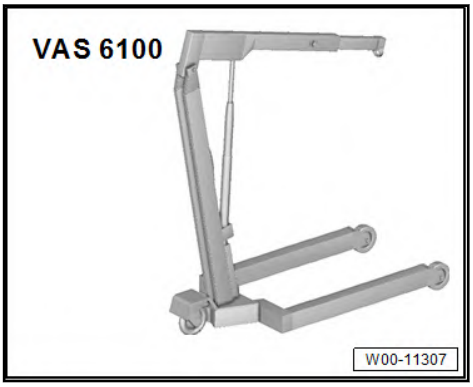

Procedure

- Engine removed ⇒ page 7
- Gearbox detached from engine ⇒ e1.2 ngine and gearbox", page 14 .

Note

Disregard -item 2-.

– Secure lifting tackle -2024 A- on engine, and attach it to workshop hoist -VAS 6100- as shown in illustration.

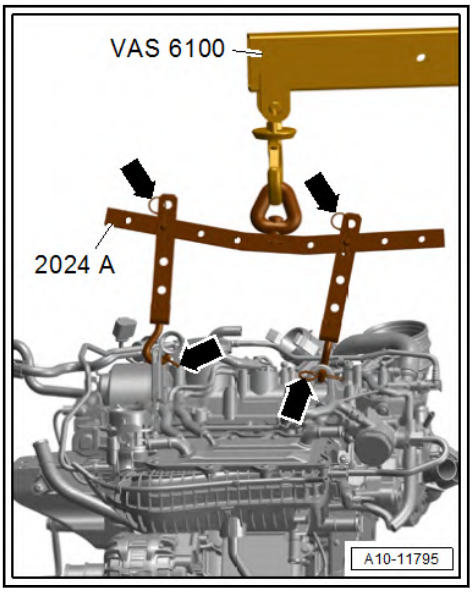

Note

- *In order to match the lifting tackle to the centre of gravity of the engine, the holes in the hook rail must be allocated as shown in the illustration.*
- *Risk of accidents due to loose components of the lifting tackle.*
- *The support hooks and retaining pins on the lifting tackle must be secured with locking pins -arrows-.*

– Using workshop hoist -VAS 6100-, lift engine off engine bracket -T10483-.

– Secure engine to engine and gearbox bracket -VAS 6095- using pins -arrows- as shown in illustration.

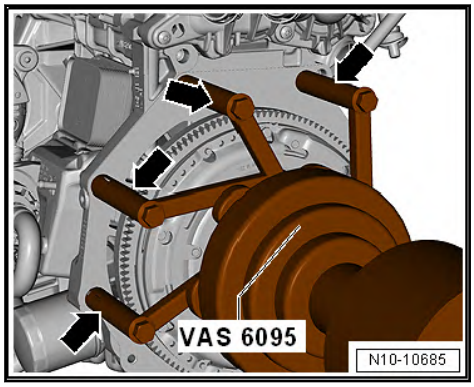

– Insert spacers -arrow-.

• Dimension -a- = 10 mm

1.4 Installing engine

Installation is carried out in reverse order of removal. When installing, note the following:

– Check clutch release bearing for wear and renew if necessary.

– Lightly grease clutch release bearing, release bearing guide sleeve and splines on input shaft with G 000 100.

– Check whether dowel sleeves for centring engine/gearbox have been fitted in cylinder block, insert if necessary.

Specified torques for gearbox: ⇒ Rep. gr. 34; Removing and installing gearbox; Specified torques for gearbox

Install starter ⇒ Electrical system; Rep. gr. 27; Starter; Removing and installing starter.

– Rock engine to align engine mountings stress-free.

Note

Specified torques for assembly mountings *⇒ m2 ountings", page 20* .

Vehicles with air conditioning system

– Install air conditioner compressor ⇒ Heating, air conditioning; Rep. gr. 87; Air conditioner compressor; Removing and installing air conditioner compressor.

– Install poly V-belt ⇒ a1.3 nd installing poly-V belt", page 38 .

Continued for all vehicles

– Install right and left drive shafts ⇒ Running gear, axles, steering; Rep. gr. 40; Drive shaft; Removing and installing drive shaft.

– Install selector mechanism to gearbox ⇒ Rep. gr. 34; Selector mechanism; Overview - selector mechanism.

– Add coolant ⇒ a1.3 nd adding coolant", page 198 .

– Install air filter housing ⇒ a3.2 nd installing air filter housing", page 260 .

– Connect a ⇒ Vehicle diagnostic tester.

– Switch on ignition, and select and carry out following menu options on⇒ Vehicle diagnostic tester:

♦ `0001 - Clear learnt values`

♦ `0001 - Adaption of throttle valve module - J338`

– Perform vehicle system test ⇒ Vehicle diagnostic tester.

– Finish the vehicle system test so that any event entries stored during assembly can be cleared automatically.

Note safety precautions applicable to a road test.

– Carry out road test.

– Then carry out vehicle system test again and rectify any faults which may have occurred.

2 Assembly mountings

⇒ o2.1 verview - assembly mountings", page 20
⇒ a2.2 nd installing engine mounting", page 22
⇒ a2.3 nd installing gearbox mounting", page 22
⇒ a2.4 nd installing pendulum support", page 23
⇒ e2.5 ngine in installation position", page 24
⇒ a2.6 ssembly mountings", page 35
⇒ a2.7 djustment of assembly mountings", page 35

2.1 Assembly overview - assembly mountings

Engine mounting

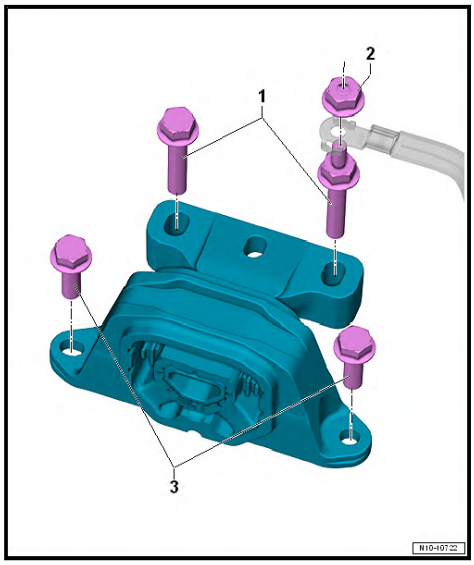

Component	Torque setting	Condition
Item -1-: bolt	40 Nm +90° further	Renew bolts after removing
Item -2-: nut	20 Nm	
Item -3-: bolt	40 Nm +90° further	Renew bolts after removing

Gearbox mounting

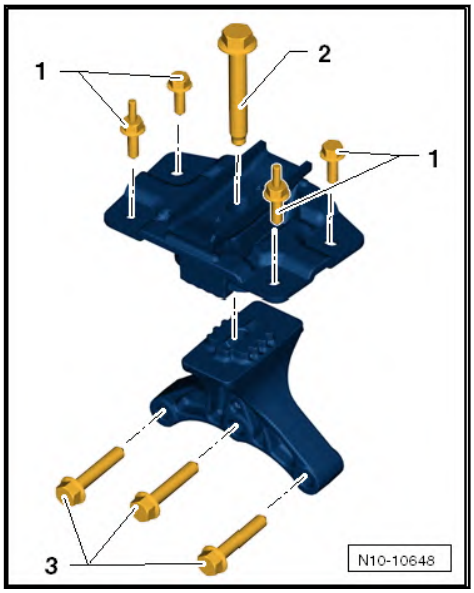

Component	Torque setting	Condition
Item -1-: bolt	20 Nm +90° further	Renew bolts after removing
Item -2-: bolt	60 Nm +180° further	Renew bolts after removing
Item -3-: bolt	40 Nm +90° further	Renew bolts after removing

Pendulum support

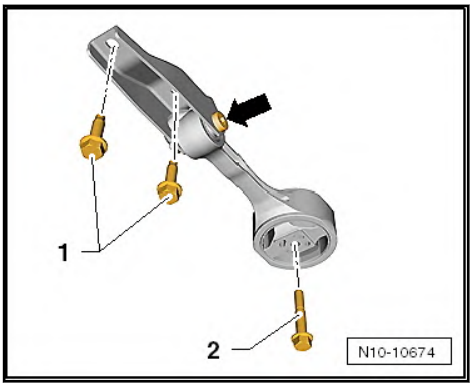

Note

The threaded connection -arrow- must not be loosened.

Component	Torque setting	Condition
Item -1-: bolt	40 Nm +90° further	Renew bolts after removing
Item -2-: bolt	40 Nm +90° further	Renew bolts after removing

2.2 Removing and installing engine mounting

Special tools and workshop equipment required

- Torque wrench -V.A.G 1331-

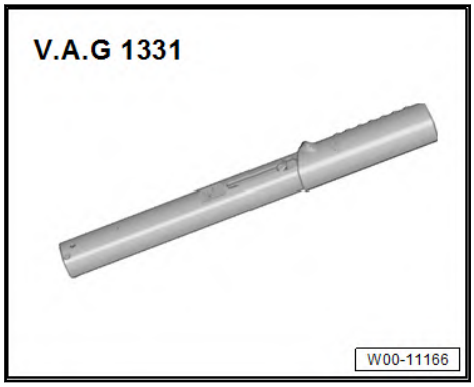

– Support engine in its installation position ⇒ e2.5.1 ngine in installation position, on camshaft housing (right-side)", page 24 .

– Unscrew earth wire -1-.

Unscrew securing bolts -arrows- and remove assembly mounting on engine side.

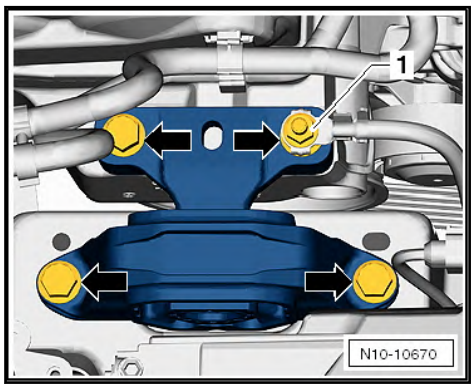

Further assembly is basically a reverse of the dismantling sequence.

Note

- *The engine mounting must be free of tension when pre-tightening bolts.*
- *The final specified torque must not be applied until the vehicle has been lowered completely.*

Torque settings

- Engine mounting ⇒ o2.1 verview - assembly mountings", page 20

2.3 Removing and installing gearbox mounting

Removing

– Remove battery tray ⇒ Electrical system; Rep. gr. 27; Battery; Removing and installing battery.

– Support engine in its installation position ⇒ e2.5.3 ngine in installation position, up!, on camshaft housing (left-side)", page 31 .

– Unscrew bolt -arrow- from gearbox mounting.

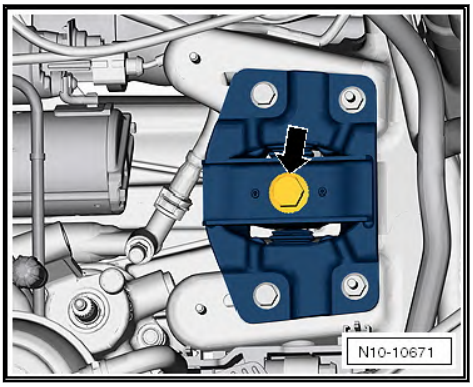

– Unscrew bolts -1-, and remove gearbox mounting.

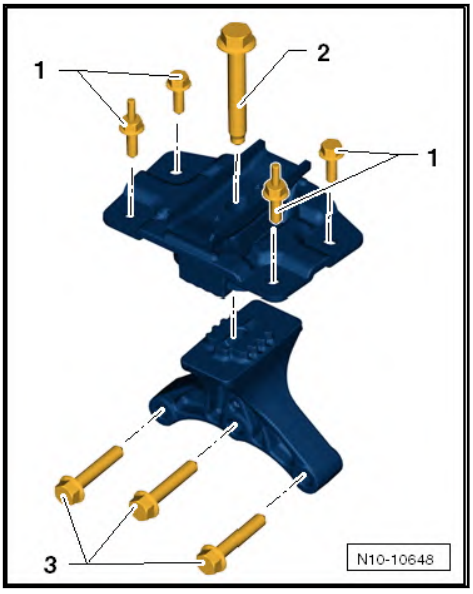

Installing

Install in reverse order of removal, observing the following:

Risk of damaging thread in gearbox support if bolts are started at an angle.

– Lift gearbox with spindle of support bracket until gearbox support makes contact with gearbox mounting.

– Checking adjustment of assembly mountings ⇒ a2.7 djustment of assembly mountings", page 35 .

– Remove support bracket -10 - 222 A- from engine.

Torque settings

♦ ⇒ a2.6 ssembly mountings", page 35

♦ ⇒ Electrical system; Rep. gr. 27; Battery; Assembly overview - battery

2.4 Removing and installing pendulum support

– Remove securing bolts -arrows- of pendulum support.

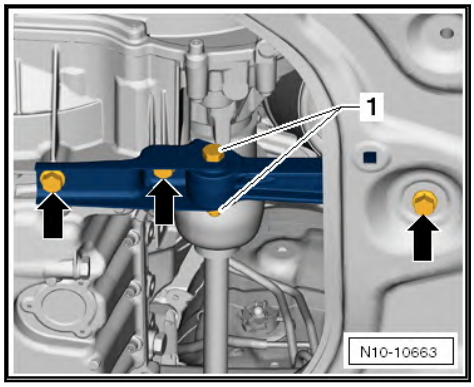

Note

The threaded connection -1- must not be loosened.

Installing

Install in reverse order of removal, observing the following:

Torque settings

- ⇒ o2.1 verview - assembly mountings", page 20

2.5 Supporting engine in installation position

⇒ e2.5.1 ngine in installation position, on camshaft housing (right-side)", page 24

⇒ e2.5.2 ngine in installation position, on crankcase", page 27

⇒ e2.5.3 ngine in installation position, up!, on camshaft housing (left-side)", page 31

2.5.1 Supporting engine in installation position, on camshaft housing (right-side)

- Depending on which parts need to be removed, the engine must be supported at 2 different points.
- For removal of the following components, adopt the procedure as follows:
- Engine mounting
- Engine mounting bracket
- Toothed belt or components of belt drive to production date WEEK 22.2012
- A modified toothed belt tensioning roller is installed on vehicles manufactured as of week 22 of 2012.
- Due to the modified tensioning roller, the engine no longer needs to be supported by means of the support bracket when removing the cylinder head and camshaft housing.

Special tools and workshop equipment required

- Support bracket -10-222 A-

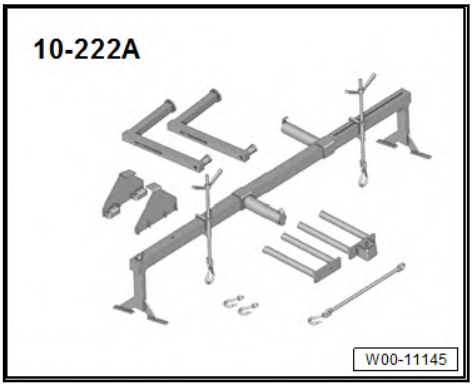

- Adapter -10 - 222 A /3-

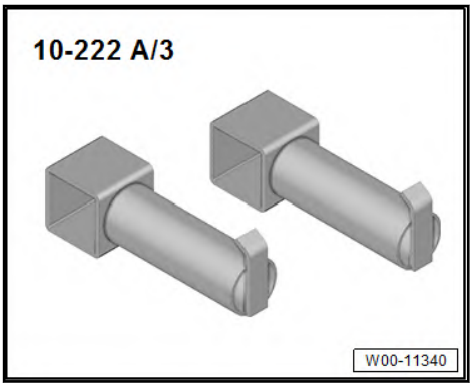

- Adapter -10 - 222 A /31-

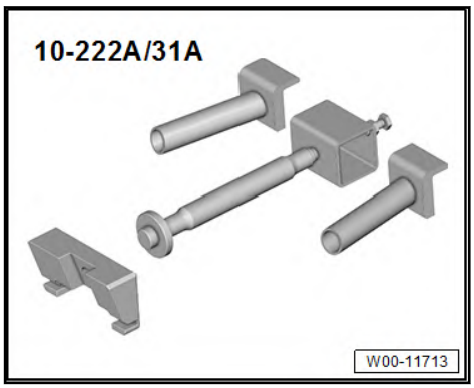

- Joints -T40091/3-

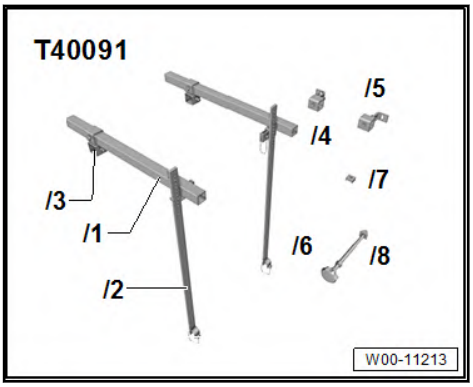

- Square tube -T40091/1-

Procedure

– Unclip coolant hoses from toothed belt guard.

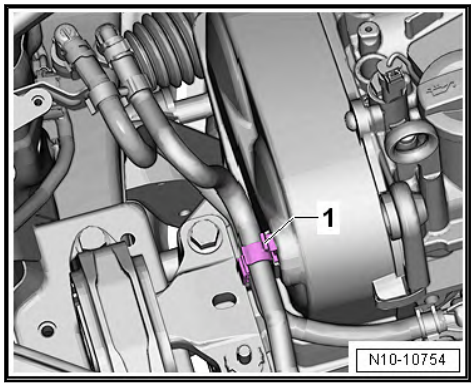

- Remove air filter housing ⇒ a3.2 nd installing air filter housing", page 260 .
- Wiper arms ⇒ Electrical system; Rep. gr. 92; Windscreen wiper system; Removing and installing wiper arms.
- Plenum chamber cover ⇒ General body repairs, exterior; Rep. gr. 50; Bulkhead; Removing and installing plenum chamber cover
- Fit adapter -10 - 222 A /31-1- and adapter -10 - 222 A /31-2- onto suspension strut supports.

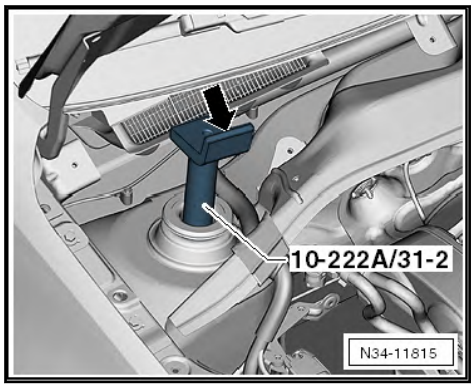

Uprights -arrow- point towards engine compartment.

- If fitted, pull bonnet seal off lock carrier.
- Fit support bracket -10 - 222 A /31-5- near right headlight onto lock carrier.
- Slide connector -T40091/3- onto support bracket -10-222 A-.

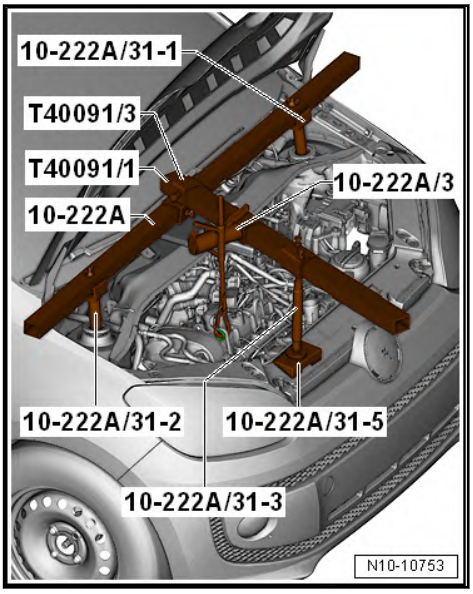

– Bolt support bracket -10-222 A- to adapter -10 - 222 A /31-1- and to adapter -10 - 222 A /31-2-.
– Connect square section tube -T40091/1- to support bracket -10-222 A-.
– Fit square section tube over support -10 - 222 A /31-3- onto adapter -10 - 222 A /31-5-.
– Bolt spindle to adapter -10 - 222 A /3-.
– Attach spindle to right lifting eye on engine.
– Take up weight of engine/gearbox assembly on spindle.

2.5.2 Supporting engine in installation position, on crankcase

- Depending on which parts need to be removed, the engine must be supported at 2 different points.
- For removal of the following components, adopt the procedure as follows:
- Camshaft case
- Cylinder head
- Gearbox mounting

Special tools and workshop equipment required

♦ Support bracket -10 - 222 A-

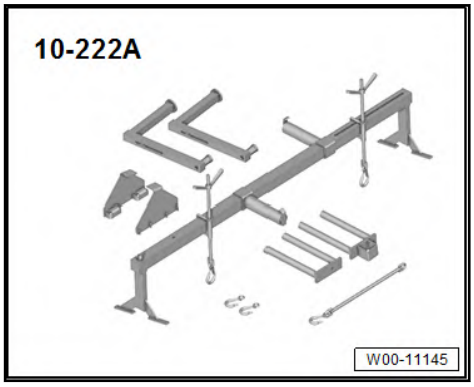

- Adapter -10-222 A/31-

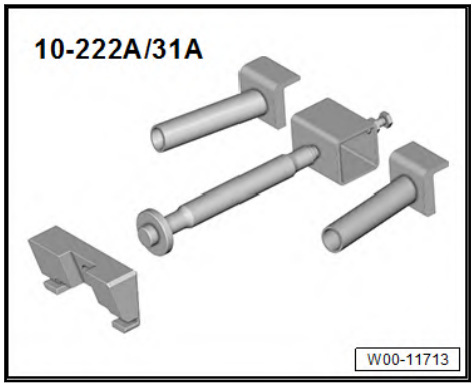

- Shackle -10-222 A/12-

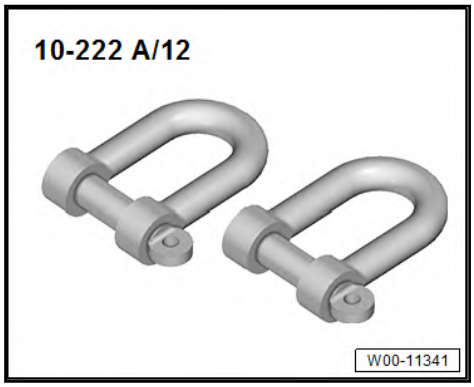

- Engine support basic set -T40091-

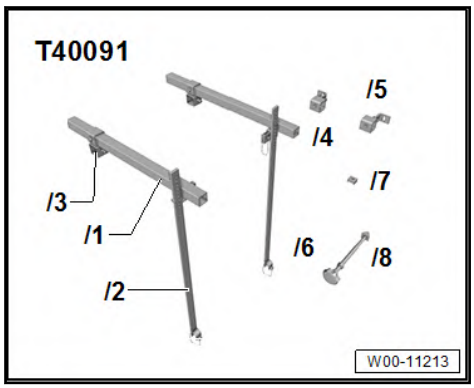

- Torque wrench -V.A.G 1332-

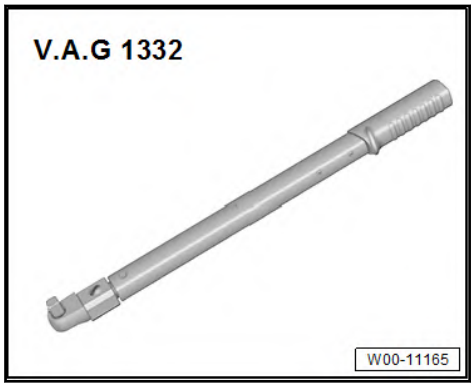

♦ Bracket -T10358-

– Unclip coolant hoses from toothed belt guard.

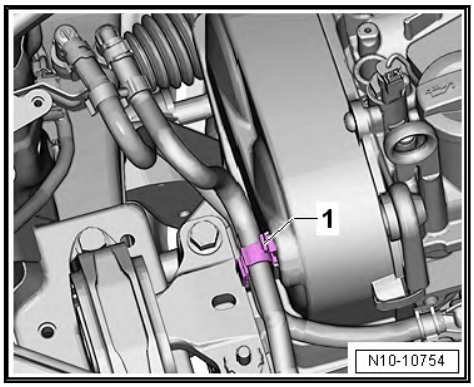

– Remove air filter housing ⇒ a3.2 nd installing air filter housing", page 260 .

– Drain coolant ⇒ a1.3 nd adding coolant", page 198 .

– Remove coolant pump ⇒ a2.3 nd installing coolant pump ", page 212 .

Note

The coolant pump toothed belt pulley is not being removed from the camshaft.

– Remove throttle valve module -GX3- ⇒ a4.3 nd installing throttle valve moduleGX3", page 267 .

– Open vacuum line fastener -arrow- at intake manifold and pull off vacuum line.

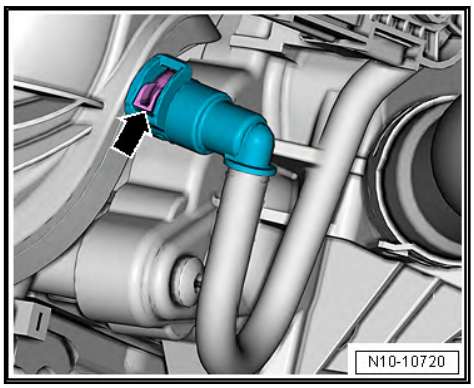

Note

A modified toothed belt tensioning roller is installed on vehicles as of week 22 of 2012. The removal and installation of the assembly mountings, the engine mounting bracket and the lower toothed belt guard are eliminated.

– Remove windscreen wiper arms: ⇒ Electrical system; Rep. gr. 92; Windscreen wiper system; Removing and installing windscreen wiper arms.

– Remove plenum chamber cover ⇒ General body repairs, exterior; Rep. gr. 50; Plenum chamber bulkhead; Removing and installing plenum chamber cover.

– Remove securing bolt -arrow- for gearbox.

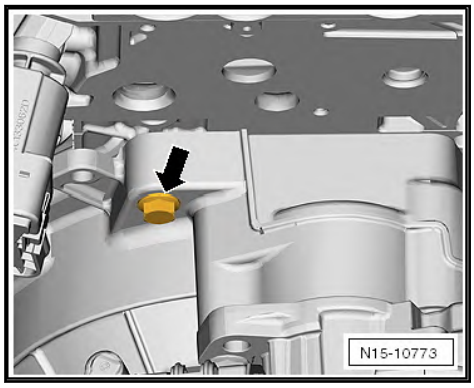

– Connect bracket -T10358- to gearbox using securing bolt.

– Fit adapter -10-222A/31-2- onto suspension struts.

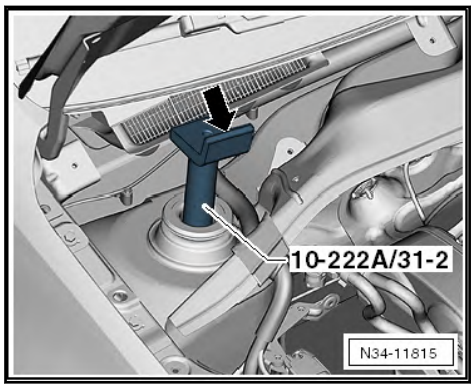

– Angle pieces of adapter -arrow- point towards engine compartment.

– Position support -10-222A/31-5- above bonnet catch.

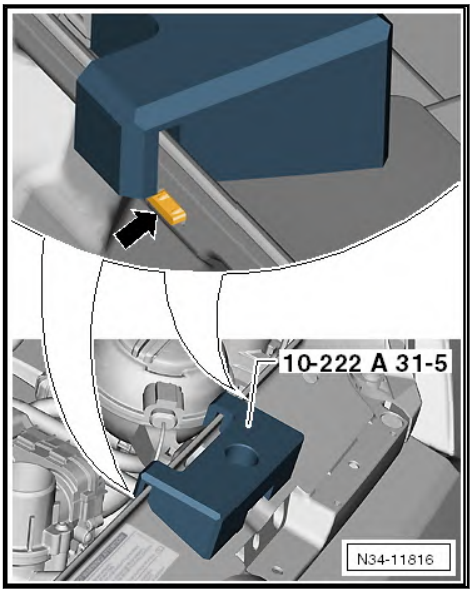

– Correct position is between 2 lugs -arrow-.
– Fit support bracket -10 - 222 A- and engine support basic set -T40091- with adapters as shown.
– Bolt shackle -10-222 A/12- to bracket -T10358-.

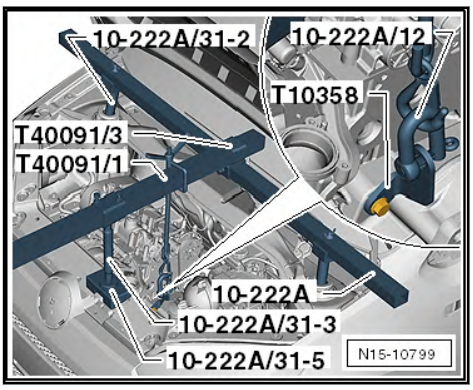

– Attach hook with spindle to shackle and slightly release load from assembly mounting by turning spindle.

2.5.3 Supporting engine in installation position, up!, on camshaft housing (left-side)

Special tools and workshop equipment required

♦ Support bracket -10-222 A-

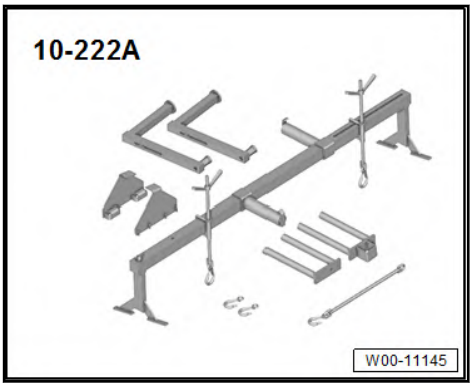

- Adapter -10 - 222 A /3-

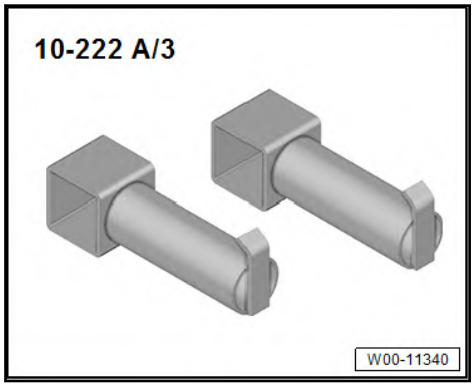

- Adapter -10 - 222 A /31-

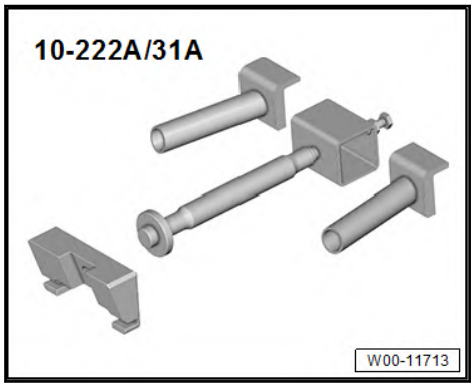

- Joints -T40091/3-

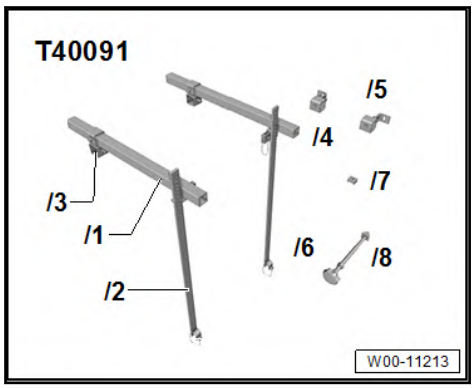

- Square tube -T40091/1-

Check tools, and prepare them as necessary:

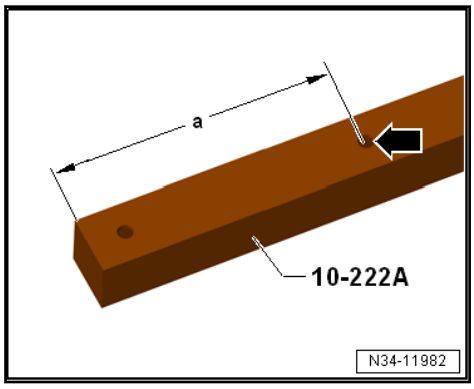

– If engine support bracket -10 - 222 A- does not yet have hole (marked with -arrow-), the hole must now be drilled into engine support bracket.

- Dimension -a- = 225 mm
- Hole ∅ = 12.5 mm.

Procedure

Note

The securing bolts for the assembly mountings must be removed only if the engine is supported in installation position using the support bracket -10-222 A-!

– Unclip coolant hoses from toothed belt guard.

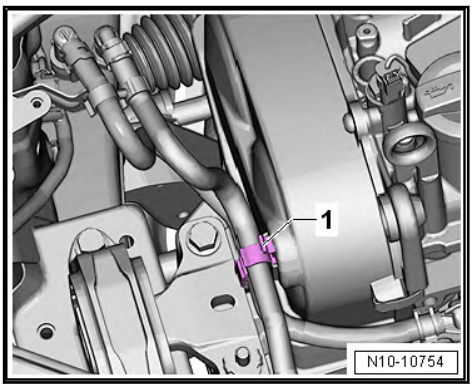

– Remove air filter housing ⇒ page 260 .

– Wiper arms ⇒ Electrical system; Rep. gr. 92; Windscreen wiper system; Removing and installing wiper arms.

– Plenum chamber cover ⇒ General body repairs, exterior; Rep. gr. 50; Bulkhead; Removing and installing plenum chamber cover

– Remove caps from shock absorbers ⇒ Running gear, axles, steering; Rep. gr. 40; Suspension strut, upper suspension link; Assembly overview - suspension strut, upper suspension link.

– Fit adapter -10 - 222 A /31-1- and adapter -10 - 222 A /31-2- onto suspension strut supports.

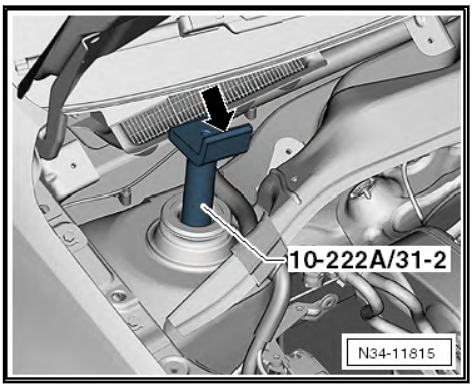

– Uprights -arrow- point towards engine compartment.

– Pull bonnet seal off lock carrier.

– Position support bracket -10-222A/31-5- on lock carrier as shown in illustration.

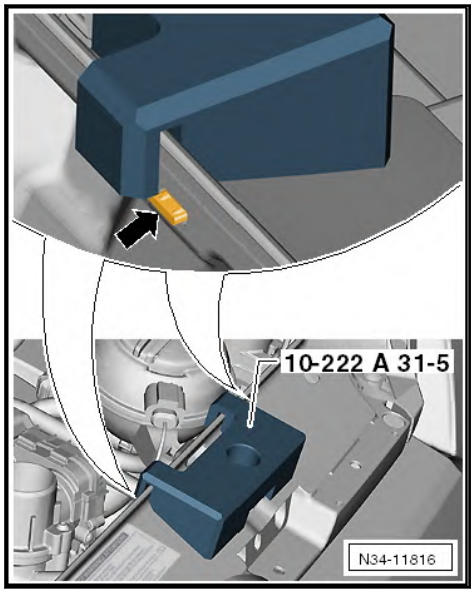

– Observe angled pieces -arrow- on lock carrier.
– Attach support bracket -10-222A/31-5- at rear to lock carrier as shown in illustration.
– Fit support bracket, and attach it to left lifting eye as shown in illustration.

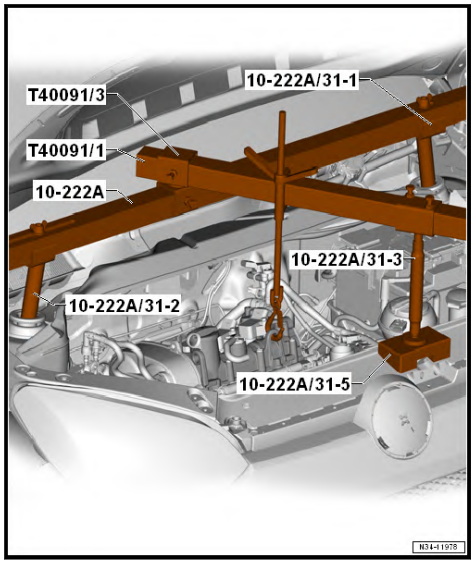

– Slide connector -T40091/3- onto support bracket -10-222 A-.
– Bolt support bracket -10-222 A- to adapter -10 - 222 A /31-1- and to adapter -10 - 222 A /31-2-.
– Push square tube -T40091/1- into mounting of support -10 - 222 A /31-3-.
– Push adapter -10 - 222 A /3- onto square tube -T40091/1-.
– Insert support -10 - 222 A /31-3- into mounting -10-222A/ 31-5- as shown in illustration.
– Screw shackle -10 - 222 A /12- into support eye on left side.
– Attach spindle -10-222A- to adapter -10 - 222 A /3-.
– Attach spindle -10-222A- to shackle -10 - 222 A /12- on left side.

– Align support bracket; support bracket -10-222A/31-5- can be moved on lock carrier during alignment.

– Tighten all threaded connections of support bracket.

– Take up weight of engine/gearbox assembly on spindle.

2.6 Adjusting assembly mountings

Procedure

– Support engine in its installation position ⇒ e2.5.1 ngine in installation position, on camshaft housing (right-side)", page 24 .

– Renew assembly mounting bolts one after the other (if not already carried out), and tighten them by hand.

• The dimension -a- between engine support and right longitudinal member must be even at front and rear.

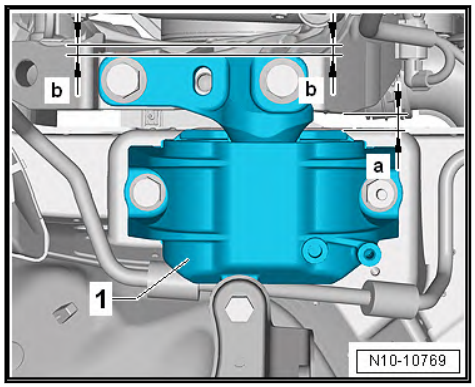

– Tighten bolts for assembly mounting.

The remaining installation steps are carried out in the reverse sequence of removal.

Torque settings

♦ ⇒ a2.7 djustment of assembly mountings", page 35

2.7 Checking adjustment of assembly mountings

Procedure

• The dimension -a- between engine support and right longitudinal member must be even at front and rear.

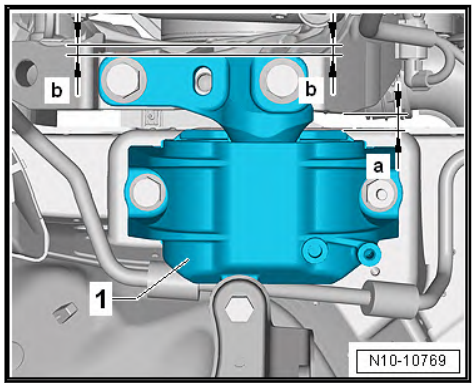

If there is a noise problem (engine or gearbox contacts longitudinal member when travelling around bends)

– Adjusting assembly mountings ⇒ page 35 .

13 – Crankshaft group

1 Cylinder block (pulley end)

⇒ o1.1 verview - poly V-belt drive", page 36

⇒ o1.2 verview - cylinder block (pulley end)", page 36

⇒ a1.3 nd installing poly-V belt", page 38

⇒ a1.4 nd installing engine support", page 41

⇒ c1.5 rankshaft oil seal - belt pulley end", page 43

1.1 Assembly overview - poly V-belt drive

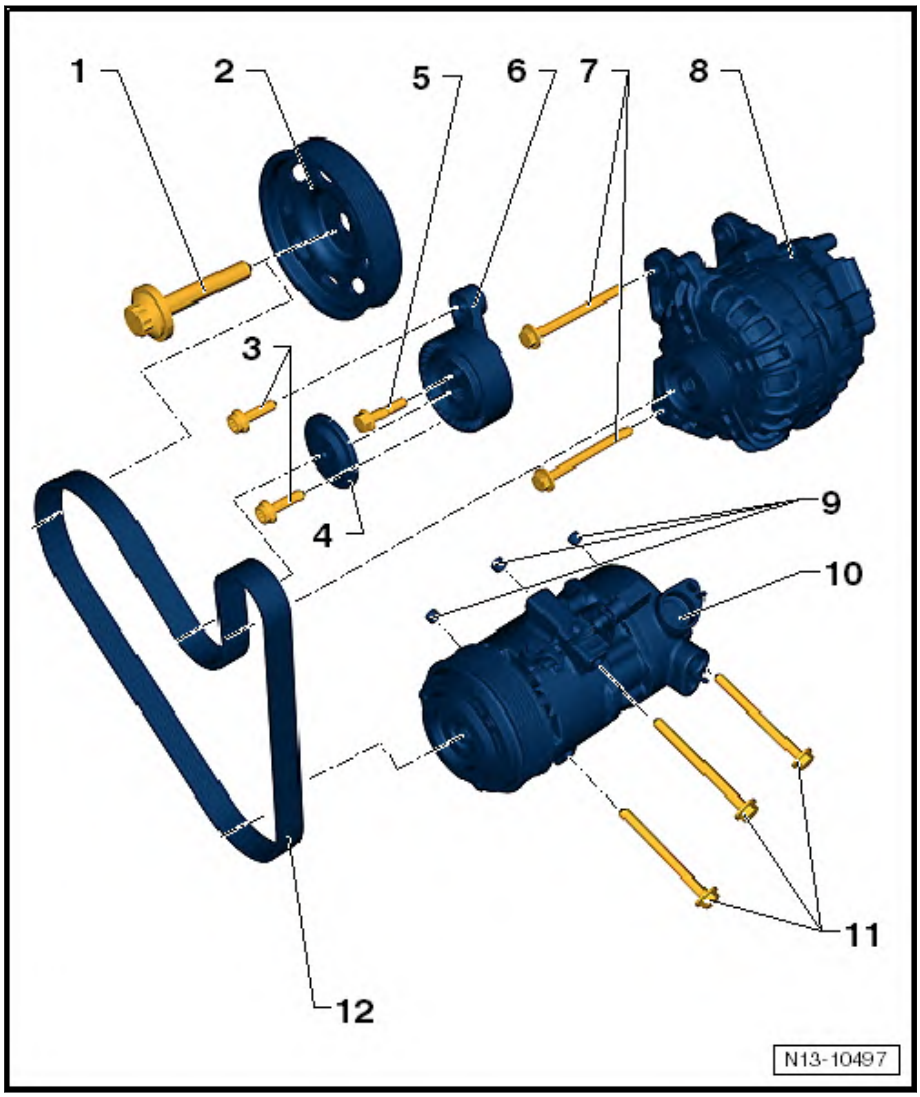

1 - Bolt
- ❑ Renew after removal
- ❑ 150 Nm +180°

2 - Vibration damper
- ❑ For crankshaft
- ❑ Keep straight when installing
- ❑ To remove and install, use counterhold tool - T10475-.

3 - Bolt
- ❑ Renew after removal
- ❑ 20 Nm +90°

4 - Cap

5 - Bolt
- ❑ 30 Nm

6 - Tensioning element

7 - Bolt
- ❑ 23 Nm

8 - Alternator

9 - Guide sleeve

10 - Air conditioner compressor

11 - Bolt
- ❑ 23 Nm

12 - Poly V-belt
- ❑ Mark direction of rotation before removing
- ❑ Removing and installing poly V-belt ⇒ a1.3 nd installing poly-V belt", page 38

1.2 Assembly overview - cylinder block (pulley end)

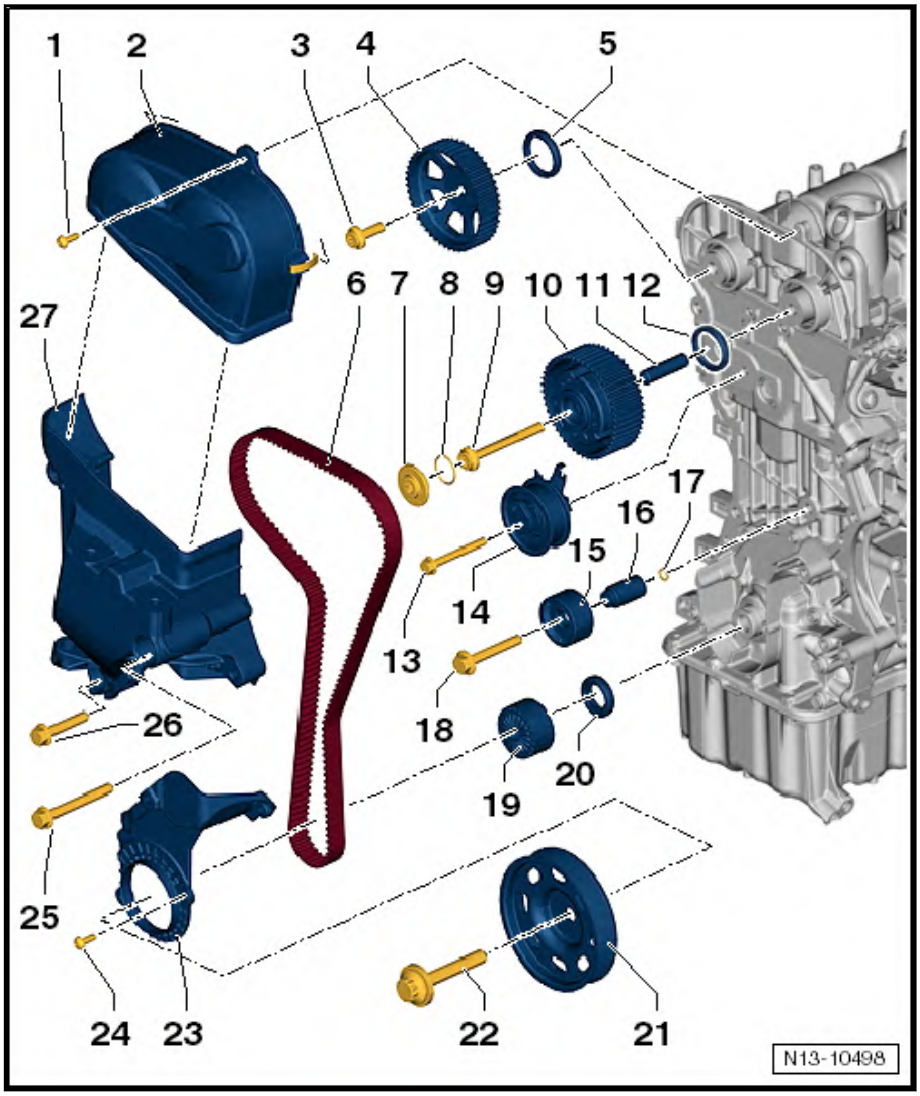

1 - Bolt
- ❑ Upper toothed belt guard
- ❑ 8 Nm

2 - Upper toothed belt guard
- ❑ Make sure that clamps are firmly seated

3 - Bolt
- ❑ Renew after removal
- ❑ 50 Nm +90°

4 - Camshaft sprocket
- ❑ For exhaust camshaft
- ❑ Removing and installing ⇒ a3.4 nd installing toothed belt pulley", page 146

5 - Seal
- ❑ Removing and installing ⇒ a3.5.3 nd installing camshaft oil seal, exhaust camshaft, gearbox end", page 155

6 - Toothed belt
- ❑ Removing and installing ⇒ a2.2 nd installing toothed belt", page 87

7 - Plug
- ❑ 20 Nm

8 - Seal
- ❑ Renew if damaged

9 - Bolt
- ❑ Renew after removal
- ❑ 50 Nm +90°

10 - Camshaft adjuster
- ❑ For inlet camshaft
- ❑ Removing and installing ⇒ a3.3 nd installing camshaft adjuster", page 140

11 - Guide sleeve

12 - Seal
- ❑ Removing and installing ⇒ a3.5.3 nd installing camshaft oil seal, exhaust camshaft, gearbox end", page 155

13 - Bolt
- ❑ 25 Nm

14 - Tensioning pulley
- ❑ From production date WEEK 22.2012 without removing engine bracket

15 - Idler roller

16 - Spacer sleeve
- ❑ Renew if idler roller "item 15" is damaged

17 - Seal

- ❑ Renew if idler roller “item 15” is damaged

18 - Bolt

- ❑ 40 Nm
- ❑ When removing and installing tensioning roller, keep from falling down

19 - Crankshaft

20 - Seal

- ❑ Removing and installing ⇒ c1.5 rankshaft oil seal - belt pulley end”, page 43

21 - Vibration damper

- ❑ For crankshaft
- ❑ Keep straight when installing
- ❑ To remove and install, use counterhold tool -T10475-.

22 - Bolt

- ❑ Renew after removal
- ❑ 150 Nm +180°

23 - Lower toothed belt guard

24 - Bolt

- ❑ 8 Nm

25 - Bolt

- ❑ Renew after removal
- ❑ 40 Nm +90°

26 - Bolt

- ❑ Renew after removal
- ❑ 40 Nm +90°

27 - Engine support

- ❑ Removing and installing ⇒ a1.4 nd installing engine support”, page 41

1.3 Removing and installing poly-V belt

⇒ a1.3.1 nd installing poly V-belt, vehicles with air conditioner compressor”, page 38

⇒ a1.3.2 nd installing poly V-belt, vehicles without air conditioner compressor”, page 40

1.3.1 Removing and installing poly V-belt, vehicles with air conditioner compressor

Special tools and workshop equipment required

- ♦ Torque wrench -V.A.G 1331-

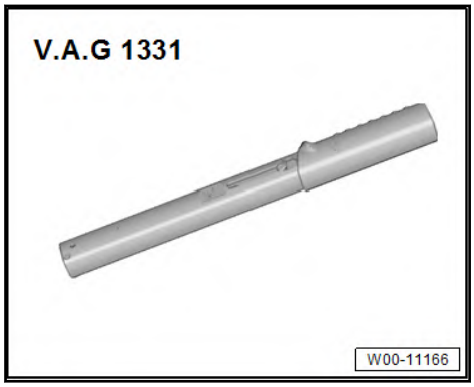

Removing

– If fitted, remove front noise insulation ⇒ General body repairs, exterior; Rep. gr. 66; Noise insulation; Assembly overview - noise insulation.

– Mark the direction of rotation of the poly V-belt with a marker.

– Lever off belt tensioner cap -arrow- using a screwdriver.

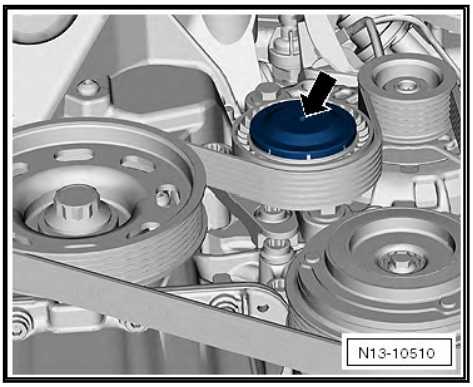

– Loosen securing bolt -1-.

– Turn belt tensioner -2- in -direction of arrow- past TDC using a socket.

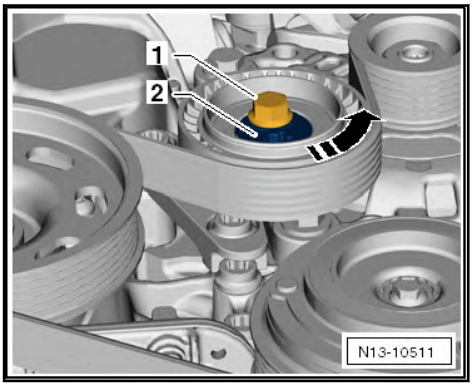

– Remove poly V-belt.

Installing

Note

When installing the poly V-belt, ensure that the belt is properly seated in the vibration damper and the belt pulleys.

– Fit poly V-belt over vibration damper pulley and pulleys of alternator and air conditioner compressor.

– Push belt onto belt tensioner.

– Turn belt tensioner -2- in -direction of arrow- past TDC using a socket.

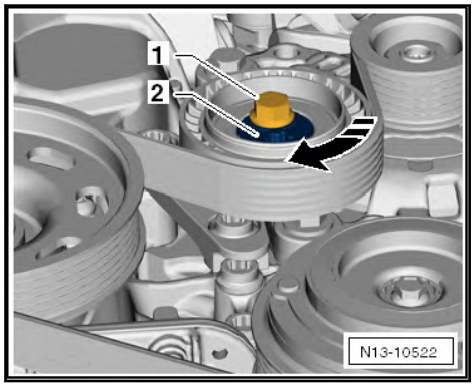

– Tighten securing bolt -1- to 30 Nm.

Poly V-belt routing

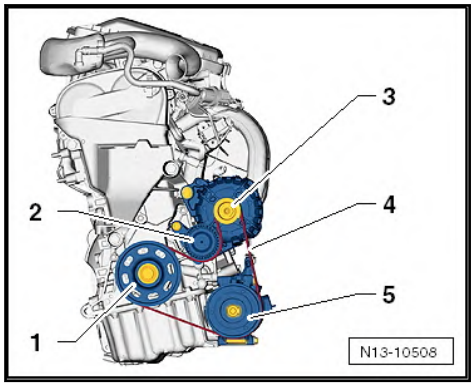

1 - Vibration damper/crankshaft

2 - Tensioning pulley

3 - Alternator pulley

4 - Poly V-belt

5 - Air conditioner compressor pulley

1.3.2 Removing and installing poly V-belt, vehicles without air conditioner compressor

Special tools and workshop equipment required

♦ Poly V-belt repair kit with assembly tools ⇒ Electronic Parts Catalogue (ETKA)

Procedure

Note

The poly V-belt repair kit with assembly tool contains the assembly tool -T10367/2- and instructions.

– If fitted, remove front noise insulation ⇒ General body repairs, exterior; Rep. gr. 66; Noise insulation; Assembly overview - noise insulation.

– Cut through poly V-belt.

Proceed as described in the instructions provided with the repair kit.

Poly V-belt routing

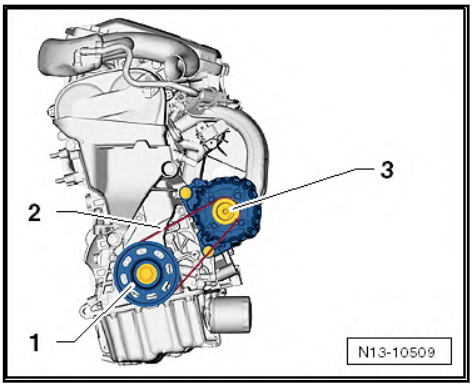

1 - Vibration damper/crankshaft

2 - Poly V-belt

3 - Alternator pulley

1.4 Removing and installing engine support

Removing

– Support engine in its installation position ⇒ e2.5.1 ngine in installation position, on camshaft housing (right-side)", page 24 .

– Open line guide -3- and remove hoses.

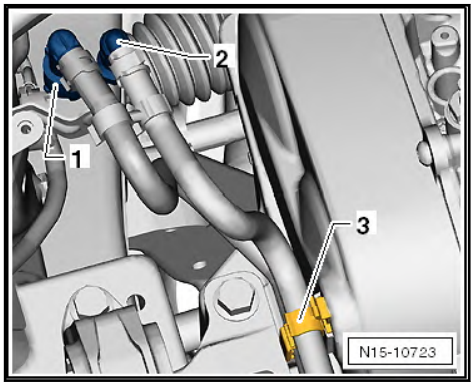

– Detach clips -arrows-.

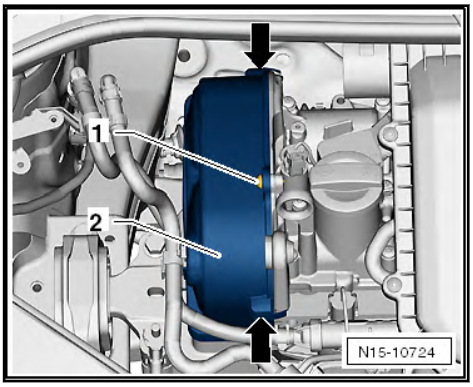

– Unscrew securing bolt -1-, and detach cover -2-.

– Unscrew earth wire -1-.

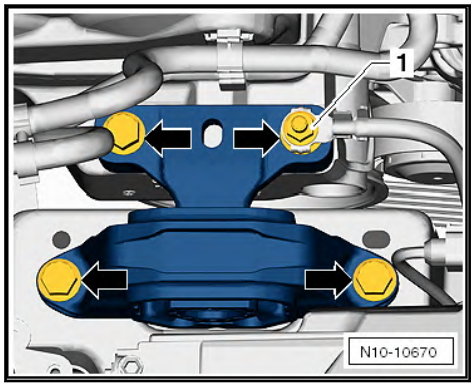

– Unscrew securing bolts -arrows- and remove assembly mounting on engine side.

– Remove poly V-belt. ⇒ a1.3 nd installing poly-V belt", page 38

– Unscrew securing bolt -1- and swivel alternator in -direction of arrow-.

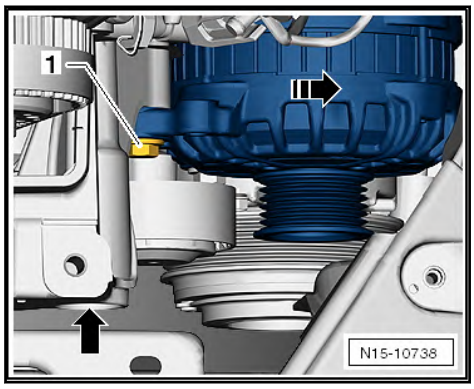

– Lift motor up sufficiently by turning spindle in order to allow for unscrewing securing bolt of engine mounting bracket.

– Unscrew securing bolts -2- of engine mounting bracket and 3 bolts -1- of lower toothed belt guard.

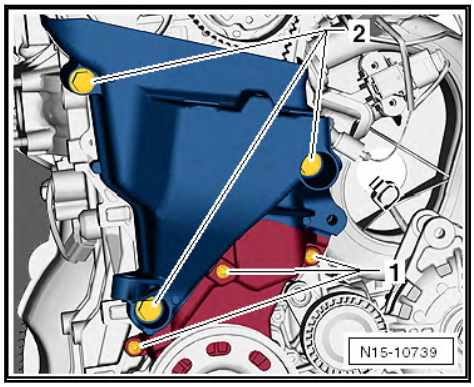

– Lift out engine mounting bracket upwards.

Installing

Further installation is carried out in reverse order of removal, observing the following:

– Plenum chamber cover ⇒ General body repairs, exterior; Rep. gr. 50; Bulkhead; Removing and installing plenum chamber cover

– Wiper arms ⇒ Electrical system; Rep. gr. 92; Windscreen wiper system; Removing and installing wiper arms.

– Install and adjust assembly mounting. ⇒ a2.6 ssembly mountings", page 35

– Remove air filter housing ⇒ a3.2 nd installing air filter housing", page 260 .

Torque settings

- Securing bolts of toothed belt guard and engine support ⇒ o1.2 verview - cylinder block (pulley end)", page 36
- Securing bolts for alternator ⇒ Rep. gr. 27; Alternator; Assembly overview - alternator
- Securing bolts of assembly mounting ⇒ o2.1 verview - assembly mountings", page 20

1.5 Renewing crankshaft oil seal - belt pulley end

Special tools and workshop equipment required

- Assembly tool -T10485/1-3-

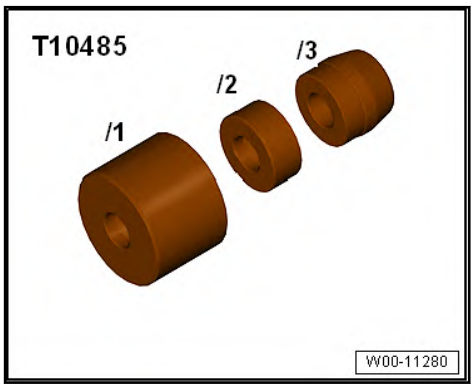

- Extractor hook -T20143-

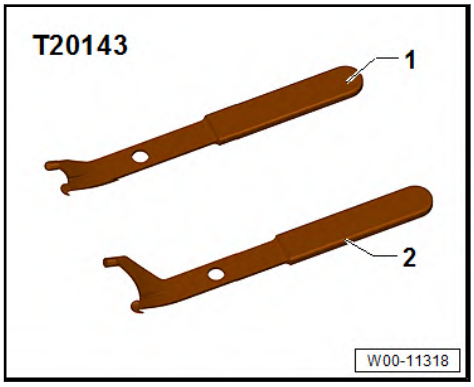

Removing

– Remove toothed belt ⇒ a2.2 nd installing toothed belt", page 87 .

– Remove seal -1- using extractor hook -T20143/1-.

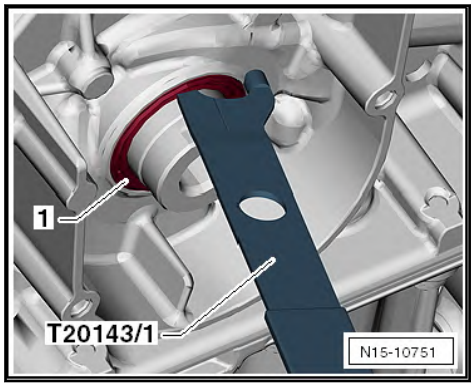

Installing

– Put together assembly sleeves -T10485/2- and -T10485/3- in -direction of arrow-.
– Fit new seal in -direction of arrow- onto assembly sleeve -T10485/2-.

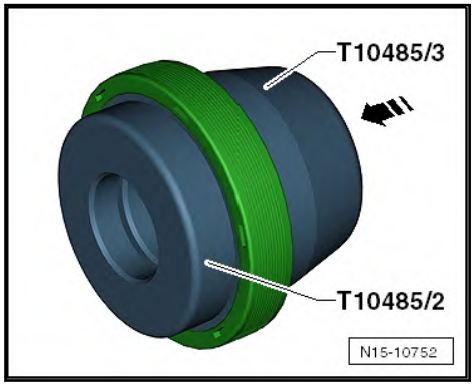

– Pull off assembly sleeve -T10485/3- in -direction of arrow-.

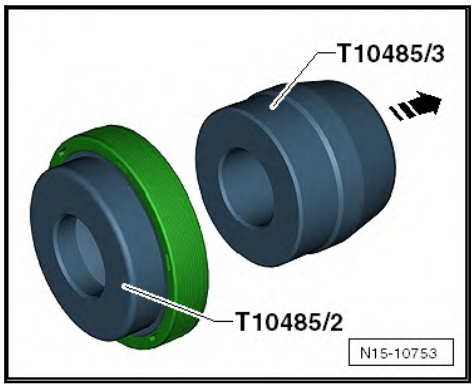

– Fit assembly sleeve -T10485/2- with seal -1- onto crankshaft stub.
– Draw in thrust piece -T10485/1- to stop with securing bolt of vibration damper -2-.

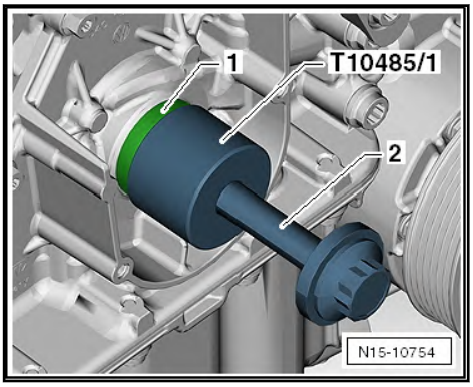

– Install toothed belt ⇒ a2.2 nd installing toothed belt", page 87 .

• After completing work, it is essential to ensure that the locking pin -T10340- and the camshaft clamp -T10477- have been removed.

Further assembly is basically a reverse of the dismantling sequence.

Torque settings

Bolt	Torque setting
Crankcase plug	30 Nm

2 Cylinder block, gearbox end

⇒ o2.1 verview - cylinder block, gearbox end", page 46

⇒ a2.2 nd installing flywheel", page 47

⇒ a2.3 nd installing sealing flange on gearbox side", page 48

2.1 Assembly overview - cylinder block, gearbox end

1 - Engine speed sender - G28-

- ❑ Removing and installing ⇒ a1.5 nd installing engine speed senderG28", page 310
- ❑ 5 Nm

2 - Connector

3 - Sealing flange with sender wheel and oil seal

- ❑ Renew sealing flange complete with oil seal and sender wheel only.
- ❑ Removing and installing ⇒ a2.3 nd installing sealing flange on gearbox side", page 48

4 - Bolt

- ❑ 8 Nm

5 - Flywheel

6 - Bolt

- ❑ Renew after removal
- ❑ 60 Nm +90°

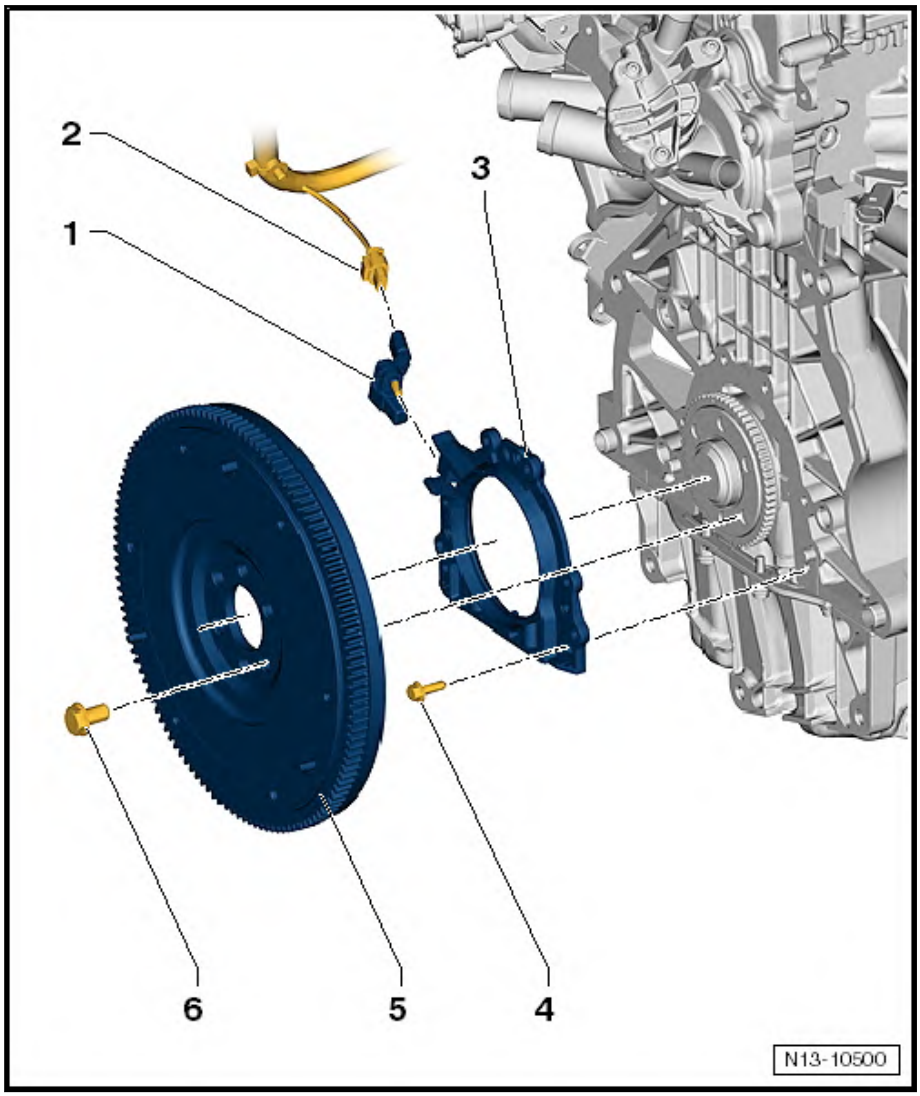

Sealing flange on gearbox side - specified torque and tightening sequence

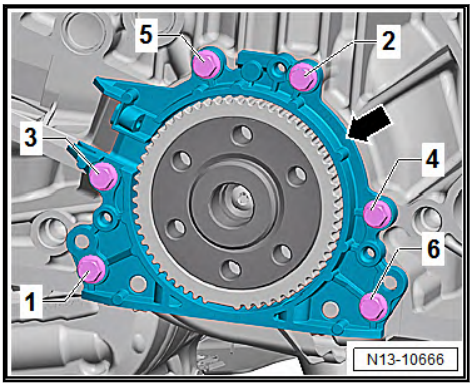

– Tighten bolts -1- to -6- in stages as follows:

Stage	Bolts	Torque setting
1)	-1 to 6-	Screw onto stop by hand
2)	-1 to 6-	In diagonal sequence and in stages; final torque 10 Nm

Install intermediate plate.

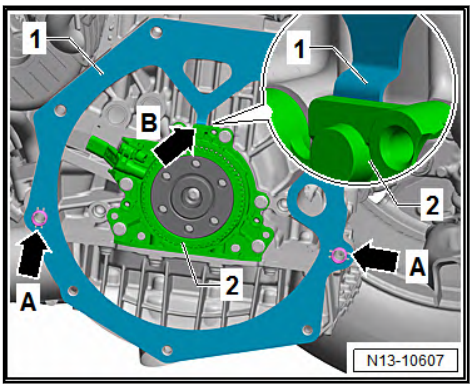

– Attach intermediate plate -1- to sealing flange -2- -arrow B-.

– Slide intermediate plate onto dowel sleeves -arrows A-.

2.2 Removing and installing flywheel

Special tools and workshop equipment required

♦ Counterhold tool -3067-

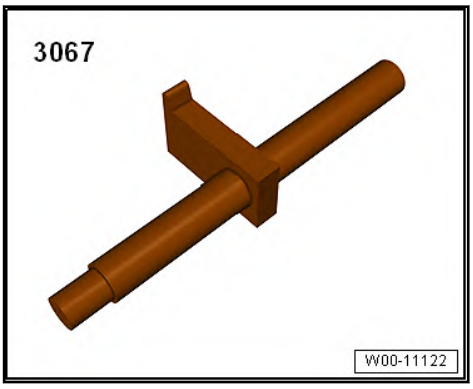

Removing

• Gearbox removed

– Insert counterhold tool -3067- into hole in cylinder block -item B-.

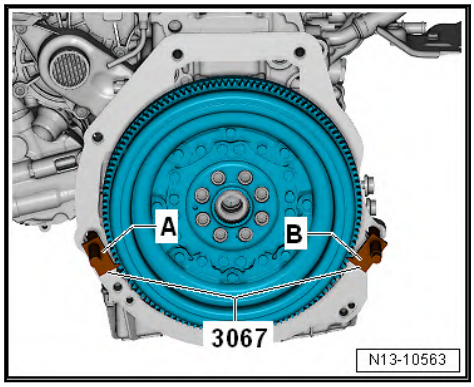

– Loosen and remove flywheel bolts.

Installing

Install in reverse order of removal, observing the following:

Note

- *Renew bolts that are tightened with turning further angle.*
- *Flywheel with sender wheel can only be fitted in one position.*

– Insert counterhold -3067- in hole in cylinder block -item A-.

Torque settings

- ⇒ o2.1 verview - cylinder block, gearbox end", page 46

2.3 Removing and installing sealing flange on gearbox side

Special tools and workshop equipment required

- Ring spanner insert -V.A.G 1332/11-

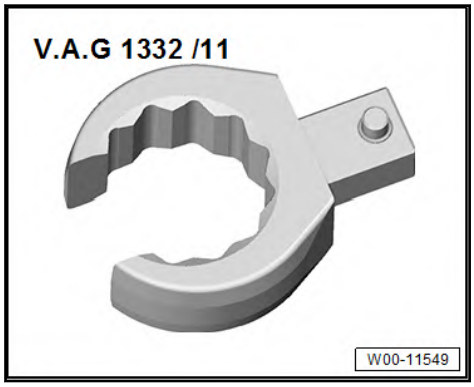

- Depth gauge -VAS 6082-

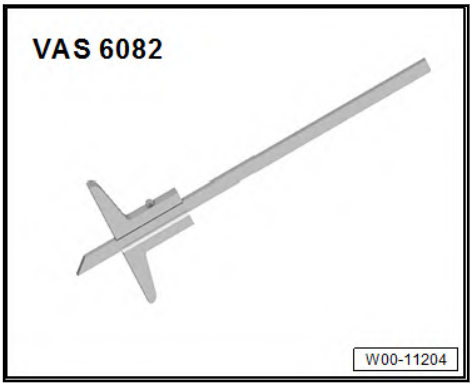

- Assembly tool -T10134-

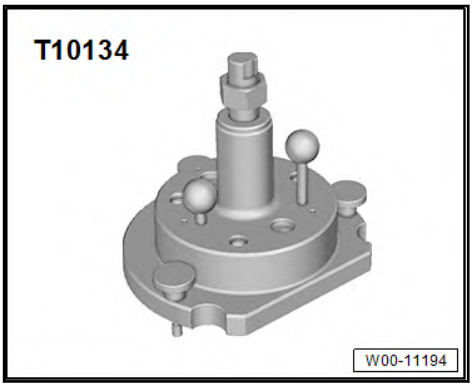

- Locating bolt -T10340-

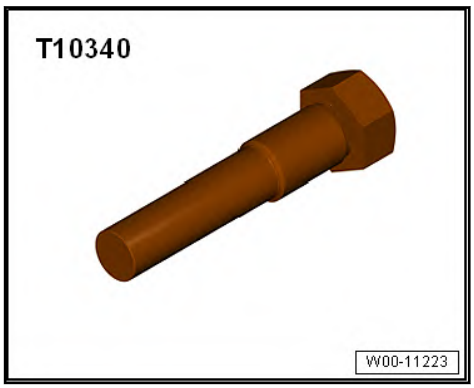

- Bolt M6x35 (3x)
- Spark plug socket, e.g. -3122 B-
- Screwdriver with a shaft length of at least 250 mm
- Hexagon key

Procedure

Note

For reasons of clarity, illustration shows work procedure with engine removed.

– Removing gearbox ⇒ Rep. gr. 34; Removing and installing gearbox.

– Remove clutch ⇒ Rep. gr. 30; Removing and installing clutch.

– Remove flywheel ⇒ a2.2 nd installing flywheel", page 47 .

– Remove intermediate plate -1- from dowel sleeves -arrows A-.

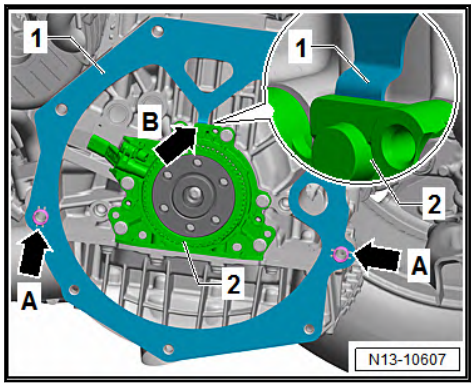

– Guide intermediate plate -1- upwards.

– While doing so, pull retaining lug -arrow B- of intermediate plate -1- out of recess behind sealing flange.

– Set piston of cylinder no. 1 to “TDC” position ⇒ p4.4 iston to TDC position”, page 66 .

– Remove sump ⇒ a1.3 nd installing sump”, page 176 .

– Remove engine speed sender -G28- -arrow- ⇒ a1.5 nd installing engine speed senderG28”, page 310 .

– Unscrew bolts -arrows- for sealing flange -1-.

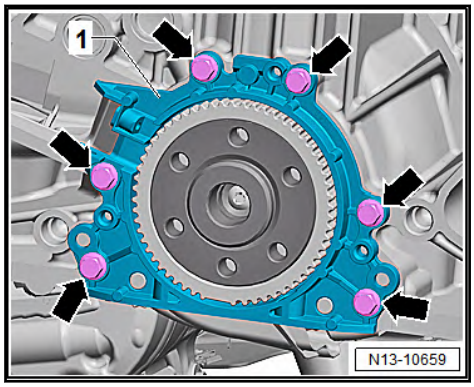

– To press off, screw 3 bolts M6 x 35 into sealing flange -1- -arrows-.

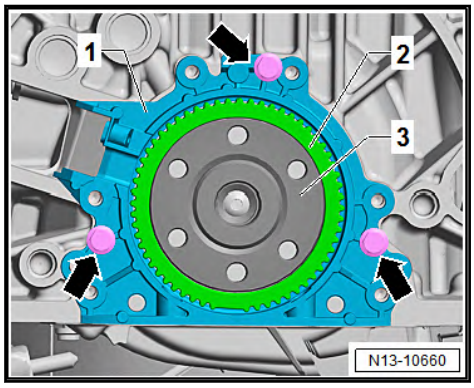

Note

The sealing flange -1- is pressed off crankshaft -3- together with the sender wheel -2-.

– Screw bolts alternately into sealing flange not more than $^{1}/_{2}$ turn at a time.
– Remove sealing flange -1- together with sender wheel -2-.

Pressing in sealing flange with sender wheel

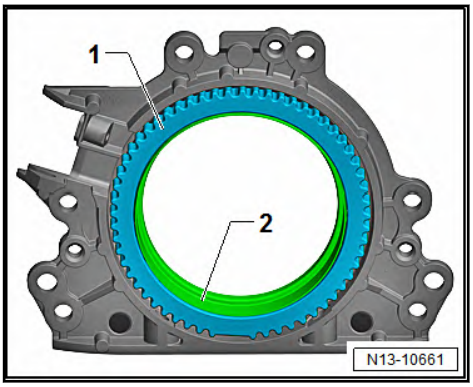

Note

- *The sealing flange with a PTFE seal is equipped with a sealing lip support ring -2-. This support ring serves as a fitting sleeve and must not be removed prior to installation.*
- *Sealing flange and sender wheel -1- must not be separated after removal from packaging.*
- *The sender wheel is held in its installation position on the locating pin of assembly tool -T10134-* *⇒ page 52* *.*
- *Sealing flange and oil seal form one unit and must only be renewed together with the sender wheel.*
- *The assembly tool -T10134- is held in its position relative to the crankshaft by a guide pin inserted into a hole in the crankshaft* *⇒ page 52* *.*

Set-up of assembly tool -T10134-:

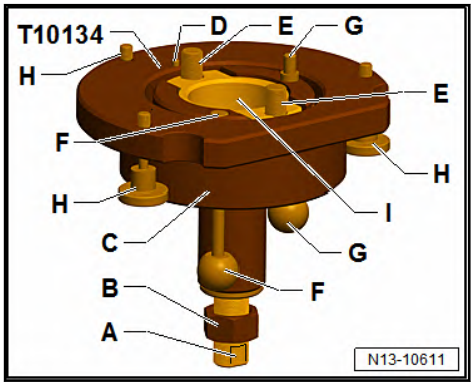

A - Clamping surface

B - Nut

C - Assembly housing

D -
Locating pin

E - Hexagon socket head bolt (qty. 2)

F -
Guide pin for petrol engines (red knob)

G - Guide pin for diesel engines (black knob)

H - Knurled screws (qty. 3)

I - Core

Fitting sealing flange with sender wheel on assembly tool - T10134-:

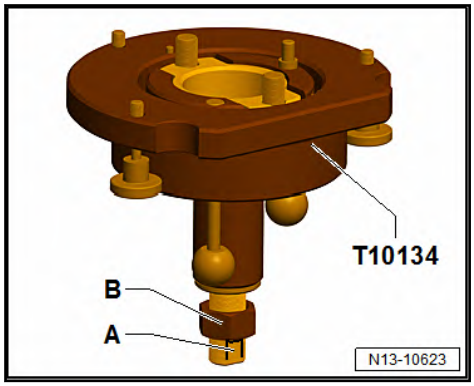

– Screw on nut -B- until just before it touches the clamping surface -A- of the threaded spindle.

– Clamp assembly device -T10134- at clamping surface -A- of threaded spindle in a vice -1-.

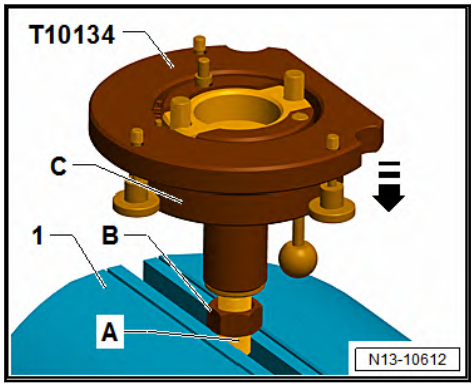

– Push assembly housing -C- downwards until it rests against nut -B-.

• Inner part of assembly tool and assembly housing must be at same height.

– If fitted, remove securing clip -arrow- from new sealing flange.

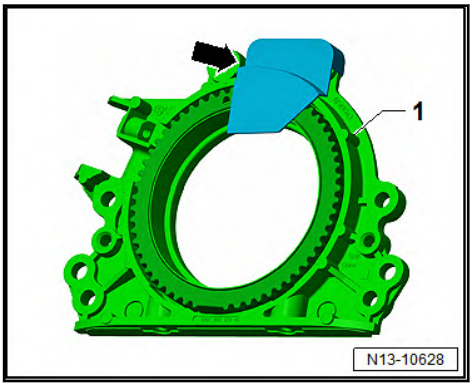

Note

Do not take the sender wheel out of the sealing flange or rotate it out of position.

– Place sealing flange with front side facing down on a clean level surface.

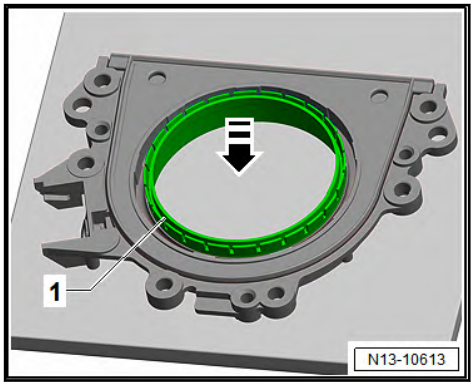

– Push sealing lip support ring -1- downwards in -direction of arrow- until it rests against flat surface.

• Upper edge of sealing lip support ring -1- and front edge of sealing flange -2- must align -arrows-.

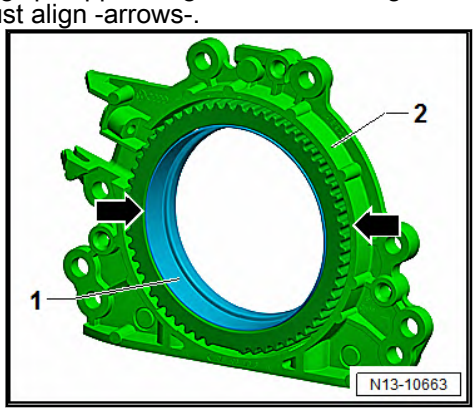

– Place sealing flange -1- with front side facing downwards onto assembly tool -T10134- so that locating pin -D- is seated in hole -3- in sender wheel hole -2-.

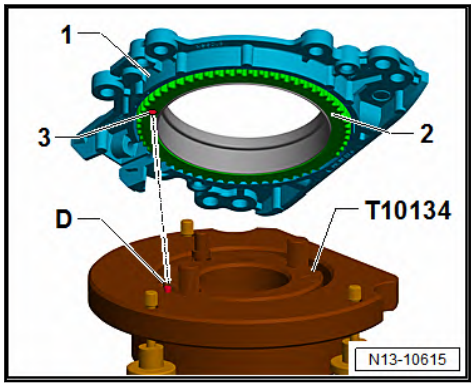

Note

- *The sealing flange can be supplied in different versions.*
- *On some versions, the »TDC position hole« -3- is not in the requisite TDC position -D-.*

– If the position -3- is not correct in relation to the locating pin -D-, carefully rotate the sender wheel -2- with support ring.

• The sealing flange must rest flat against the assembly tool.

– Screw knurled screws -H- into sealing flange -1-.

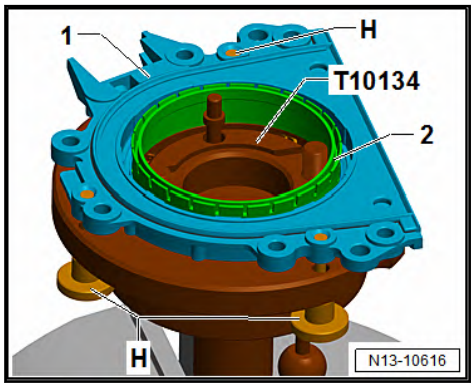

– Press sealing flange -1- and sealing lip support ring -2- against surface of assembly tool -T10134- whilst tightening knurled screws.

– This prevents the locating pin from slipping out of the sender wheel hole.

– When installing sealing flange, ensure that sender wheel remains fixed in assembly tool.

Mounting assembly tool -T10134- with sealing flange -1- on crankshaft flange:

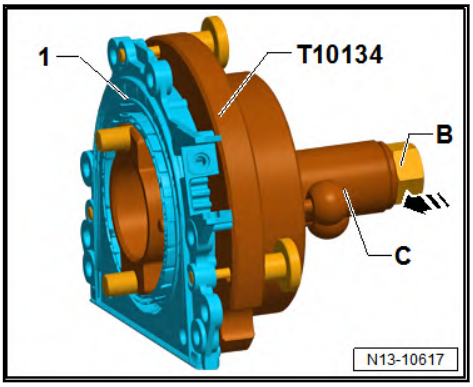

- The crankshaft flange must be free of grease and oil.
- Engine is at “TDC” position.

– Screw on nut -B- until it reaches end of threaded spindle.

– Press threaded spindle of assembly tool -T10134- in -direction of arrow-, until nut -B- rests against assembly housing -C-.

– Align flat side of assembly housing to sealing surface of cylinder block on sump side.

– Attach assembly tool -T10134- together with sealing flange -1- to crankshaft flange -2-.

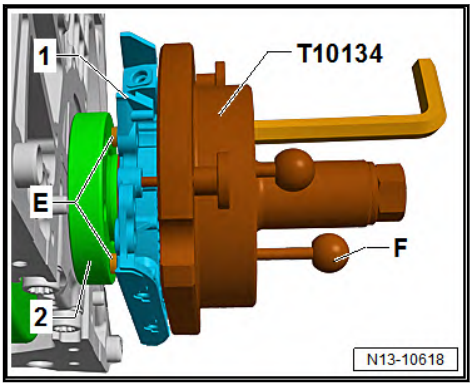

– To do this, screw hexagon socket head bolts -E- into crankshaft flange (approx. 5 full turns) using a hexagon key.

– Push guide pin for petrol engines (red knob) -F- into crankshaft flange.

– To guide sealing flange -1-, screw two M6×35 mm bolts -2- into cylinder block.

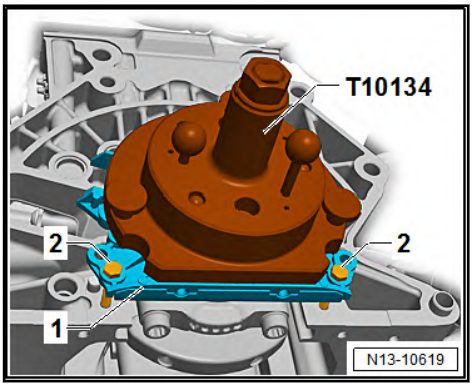

Bolting assembly tool -T10134- onto crankshaft flange:

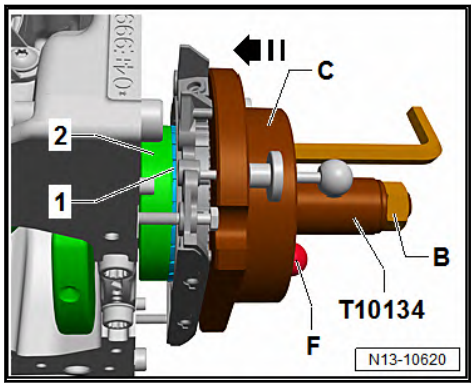

– Push assembly housing -C- by hand in -direction of arrow- until sealing lip support ring -1- rests against crankshaft flange -2-.

– Make sure that guide pin for petrol engines (red knob) -F- is properly seated in hole in crankshaft. This ensures that the sender wheel reaches its final installation position.

Note

The guide pin for diesel engines (black knob) must not be inserted in threaded hole of crankshaft.

– Tighten the two hexagon socket head bolts of assembly tool hand-tight.

– Screw nut -B- by hand onto threaded spindle until it rests against assembly housing -C-.

Pressing sender wheel onto crankshaft flange using assembly tool -T10134-:

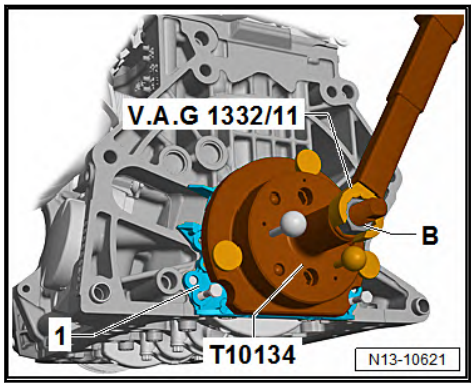

– Tighten nut -B- of assembly tool -T10134- to 35 Nm.

• After the nut has been tightened to 35 Nm, a small air gap must still be present between cylinder block and sealing flange -1-.

Checking sender wheel installation position on crankshaft:

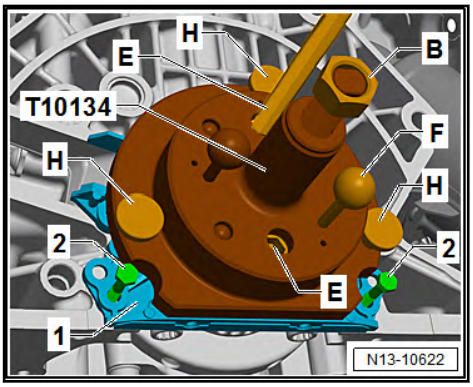

- Screw on nut -B- until it reaches end of threaded spindle.
- Unscrew the two bolts -2- from cylinder block.
- Pull guide pin for petrol engines (red knob) -F- out of crankshaft flange.
- Unscrew knurled screws -H- from sealing flange -1-.
- Unbolt assembly tool -T10134- from crankshaft flange, unscrewing hexagon socket head bolts -E- from crankshaft flange.
- Remove sealing lip support ring.
- Position depth gauge -VAS 6082- on crankshaft flange -2-.

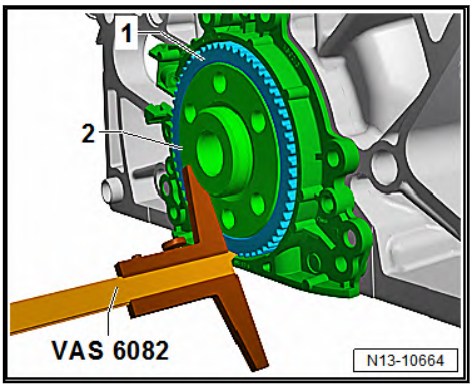

- Measure distance between crankshaft flange -2- and sender wheel -1-.
- Measure distance -a- between crankshaft flange -2- and sender wheel -1-.

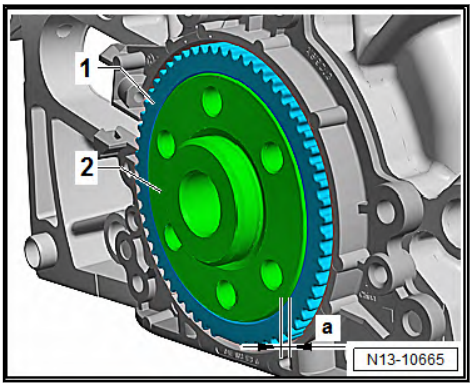

- Specification: dimension -a- = 0.5 mm

– If specification is not achieved, press sender wheel further in ⇒ page 58 .

– If specification is achieved, proceed with subsequent work steps ⇒ page 58 .

Re-pressing sender wheel:

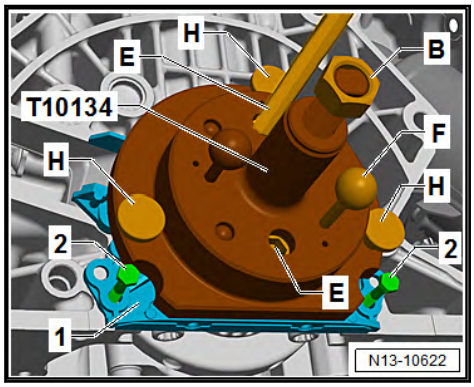

– Secure assembly tool -T10134- on crankshaft flange -2-.

– Make sure that locating pin of assembly tool -T10134- is properly seated in sender wheel hole.

– Tighten hexagon socket head bolts -E- by hand.

– Push assembly tool -T10134- by hand against sealing flange -1-.

– Screw nut -B- by hand onto threaded spindle until it rests against assembly tool -T10134-.

– Push guide pin for petrol engines (red knob) -F- into crankshaft flange.

– Screw knurled screws -H- into sealing flange -1-.

– To guide sealing flange, screw two M6×35 mm bolts -2- into cylinder block.

– Tighten nut -B- of assembly tool -T10134- to 40 Nm.

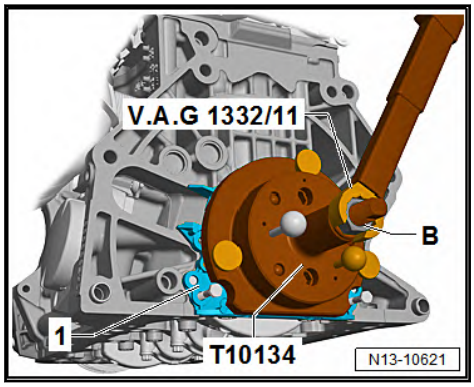

– Check sender wheel installation position on the crankshaft again ⇒ page 57 .

– If the specification is not achieved, tighten nut of assembly tool -T10134- to 45 Nm.

– Check sender wheel installation position on the crankshaft again ⇒ page 57 .

Assembling

– Tighten bolts for sealing flange (vehicles with manual gearbox) ⇒ page 46 .

– Install sump ⇒ a1.3 nd installing sump", page 176 .

– Install intermediate plate (vehicles with manual gearbox) ⇒ page 47 .

– Install flywheel (vehicles with manual gearbox) ⇒ a2.2 nd installing flywheel", page 47 .

Torque settings

- ⇒ Fig. ""Sealing flange on gearbox side - specified torque and tightening sequence"", page 46
- ⇒ o2.1 verview - cylinder block, gearbox end", page 46
- ⇒ o1.1 verview - ignition system", page 303
- ⇒ General body repairs, exterior; Rep. gr. 66; Noise insulation; Assembly overview - noise insulation
- ⇒ Rep. gr. 34; Removing and installing gearbox; Specified torques for gearbox

3 Crankshaft

⇒ d3.1 imensions", page 60

3.1 Crankshaft dimensions

NOTICE

Risk of damage to bearing pedestals when the crankshaft is removed.

If the bolts of the crankshaft bearing cap are loosened, the bearing pedestals of the cylinder block will be deformed, and damage to the bearings will result.

– **Never remove the crankshaft.**

Note

- *Risk of deformation of bearing pedestals.*
- *The crankshaft must not be removed.*
- *Just loosening the main bearing caps will cause deformation of the cylinder block bearing pedestals.*
- *This deformation will cause a reduction of the bearing clearance.*
- *Even if the bearing shells are not renewed bearing damage could occur due to a different bearing clearance.*
- *If the bearing cap bolts are loosened, the cylinder block must be renewed complete with the crankshaft.*

Measuring the crankshaft bearing clearance is not possible with normal workshop equipment.

Honing dimension in mm	Crankshaft main journal ∅	Conrod journal ∅
Basic dimension	---	-0.022 42.00 -0.037

4 Pistons and conrods

4.1 Assembly overview - pistons and conrods

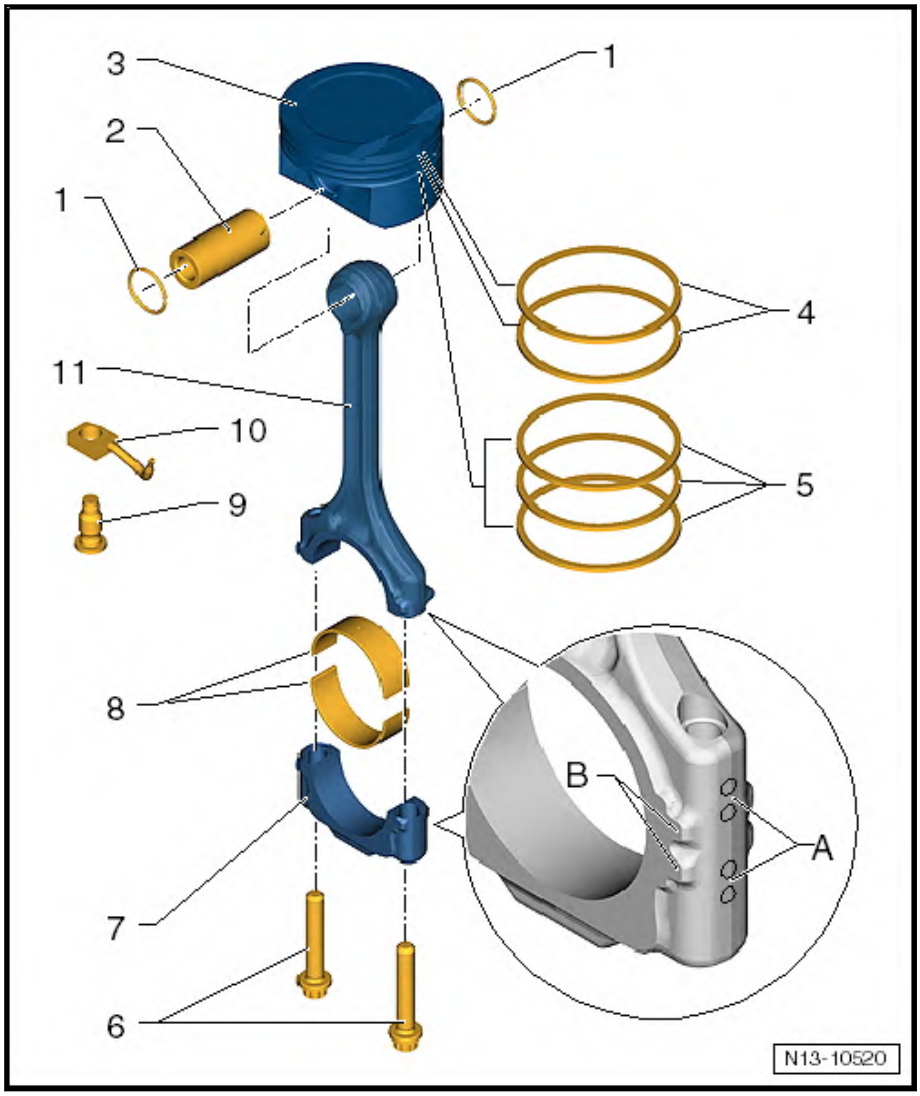

1 - Locking ring

2 - Piston pin

- ❑ If difficult to remove, heat piston to 60°C.
- ❑ Remove and install using drift -10 - 14-.

3 - Piston

- ❑ Checking ⇒ p4.2 istons and cylinder bores", page 63
- ❑ Mark installation position and cylinder number.
- ❑ Arrow on piston crown points to belt pulley end.
- ❑ Install using piston ring clamp.

4 - Compression rings

- ❑ Offset gaps by 120°
- ❑ Remove and install compression rings with piston ring pliers.
- ❑ "TOP" faces towards piston crown.
- ❑ Checking ring gap ⇒ p4.2 istons and cylinder bores", page 63 .
- ❑ Checking ring-to-groove clearance ⇒ p4.2 istons and cylinder bores", page 63 .

5 - Oil scraper rings

- ❑ Carefully remove and install 3-part oil scraper rings by hand.
- ❑ Checking ring gap ⇒ p4.2 istons and cylinder bores", page 63 .
- ❑ Ring-to-groove clearance not measurable.

6 - Conrod bolt

- ❑ Oil threads and contact surface
- ❑ To measure radial clearance, tighten to corresponding specified torque but not further.
- ❑ Renew after removal
- ❑ 30 Nm +90°

7 - Conrod bearing cap

- ❑ The caps only fit in one position and only on the appropriate conrod due to the cracking procedure separating the cap from the conrod.
- ❑ Mark with cylinder number prior to removal -A-.
- ❑ Installation position: Mark -B- points to belt pulley end (if mark is missing, mark before removing).

8 - Bearing shell

- ❑ Do not interchange used bearing shells.
- ❑ Insert bearing shells centrally.

Checking radial clearance with Plastigage:

- ❑ New: 0.020 … 0.060 mm

- ❑ Wear limit: 0.070 mm
- ❑ Do not rotate crankshaft when checking radial clearance.

9 - Bolt with pressure relief valve

- ❑ Opening pressure of pressure relief valve: 1.8 … 2.2 bar
- ❑ 27 Nm

10 - Oil spray jet

- ❑ For piston cooling.

11 - Connecting rod

- ❑ Renew as set only.
- ❑ Mark with cylinder number -A-.
- ❑ Installation position: Mark -B- points to belt pulley end (if mark is missing, mark before removing).
- ❑ Guided axially by piston.

4.2 Checking pistons and cylinder bores

Checking piston

Special tools and workshop equipment required

♦ External micrometer 50-75 mm -VAS 6070-

– Using an external micrometre, measure approx. 10 mm from lower edge, offset 90° from piston pin axis.

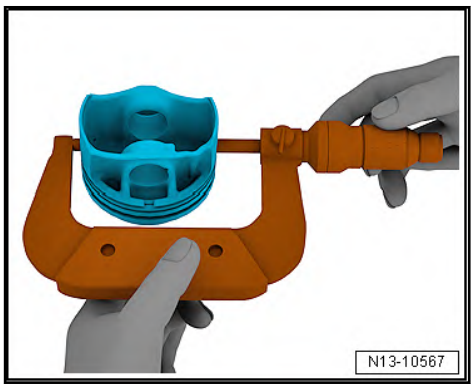

- Maximum deviation from nominal dimension: -0.04 mm.

Piston diameter, mm	
Specification	74.454 … 74.482 mm

Checking piston ring gap

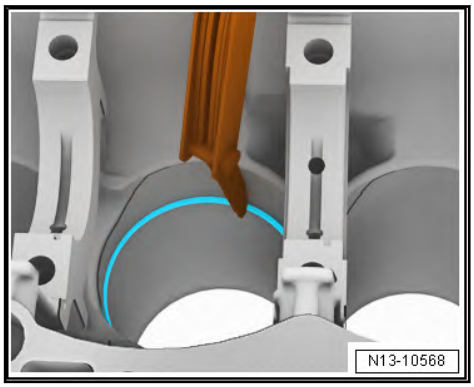

– Push ring squarely from above down into cylinder bore to approx. 15 mm from bottom end of cylinder.

Piston ring dimensions in mm	New	Wear limit
1st compression ring	0.20 to 0.35	1.0
2nd compression ring	0.40 to 0.60	1.0
Oil scraper ring	0.20 to 0.90	---[1]

1) No wear limit details available

Checking ring-to-groove clearance

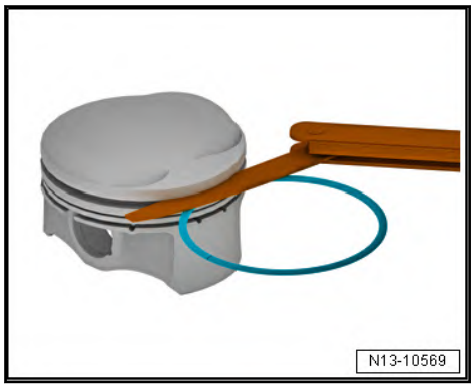

Clean annular groove before check.

Piston ring dimensions in mm	New	Wear limit
1st compression ring	0.04 to 0.08	0.15
2nd compression ring	0.02 to 0.06	0.15
Oil scraper ring	Cannot be measured	

Measuring cylinder bore

Special tools and workshop equipment required

- ♦ Cylinder gauge -VAS 6078-
- • Do not measure cylinder bores when cylinder block is mounted on engine and gearbox support -VAS 6095-, as measurements may be incorrect.
- – Using cylinder gauge -VAS 6078- take measurements at 3 positions diagonally in lateral direction -A- and longitudinal direction -B-.

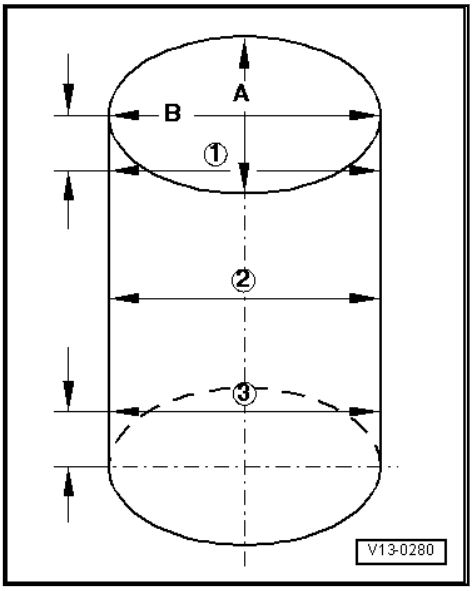

- Maximum deviation from nominal dimension: 0.08 mm.

Cylinder bore diameter, mm	
Specification mm	74.505 … 74.515 mm
Permissible deviation	-15 … +30 µm

4.3 Separating new conrod

On new conrods it is possible that the breaking point is not fully separated. Proceed as follows if the conrod bearing cap cannot be removed by hand:

– Mark the cylinder to which the conrod belongs ⇒ Item 11 (page 63) .

– Clamp conrod -1- in a vice below the dashed line using aluminium vice clamps.

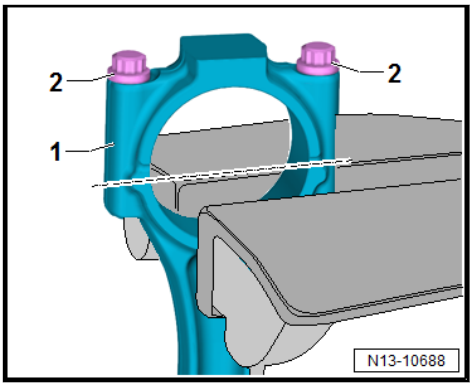

Note

♦ *Only clamp the conrod lightly in order to avoid damaging it.*

♦ *Conrod is clamped below the dashed line.*

– Unscrew both bolts -arrows- about 5 turns.

– Using a plastic hammer, carefully knock against conrod bearing cap in -direction of arrow- until it is loose.

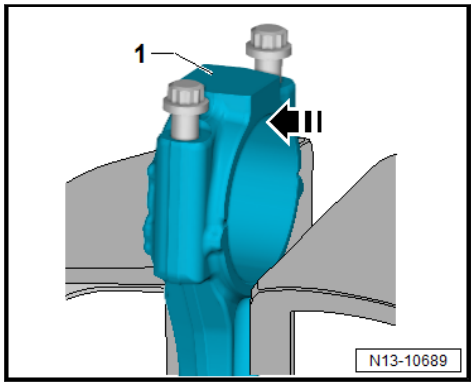

Torque setting

- Securing bolts for conrod bearing cap ⇒ o4.1 verview - pistons and conrods", page 61

4.4 Setting piston to TDC position

Special tools and workshop equipment required

- Locating bolt -T10340-

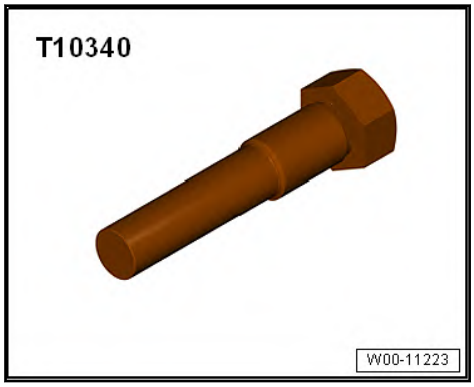

Procedure

– Remove noise insulation ⇒ General body repairs, exterior; Rep. gr. 66; Noise insulation; Assembly overview - noise insulation.

– Unscrew plug -arrow- from crankcase.

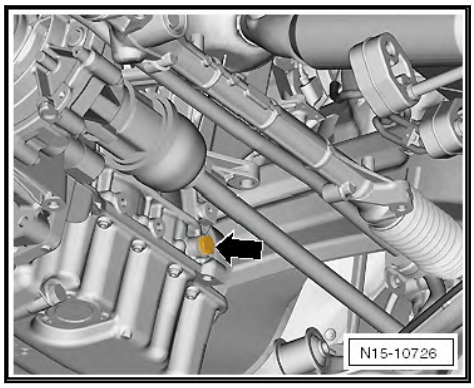

– Lower lifting platform completely.

Note

- *The lifting platform must be lowered completely so that the locking pin -T10340- can be screwed into the crankcase.*
- *When the vehicle is raised, the hole is hidden behind the drive shaft.*

– Screw locking pin -T10340- into crankcase from above as far as it will go.

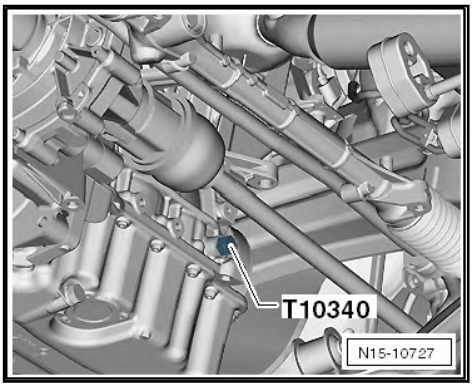

– The bolt head of locking pin -T10340- must contact cylinder block when doing this.
– If locking pin -T10340- cannot be screwed in as far as stop, this indicates that crankshaft is not in the correct position!
– Unscrew locking pin -T10340-.
– Turn crankshaft 90° in direction of rotation of engine.
– Screw locking pin -T10340- into cylinder block as far as stop and tighten to 30 Nm.
– Rotate crankshaft in normal direction of rotation as far as stop. The locking pin -T10340- now rests against the crank web.

Note

Locking pin -T10340- locks crankshaft in direction of engine rotation only.

– Unclip line guide from cover.

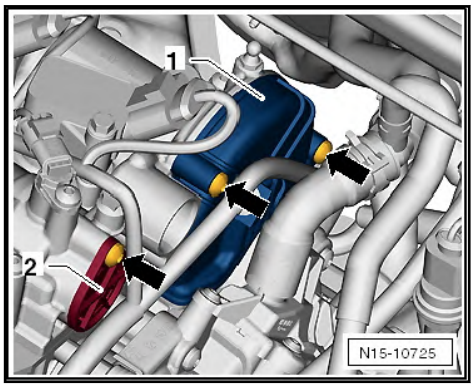

– Remove cover -1- and cover -2-.

- Grooves -1- of inlet camshaft -3- are positioned above the horizontal camshaft centre line -2-.

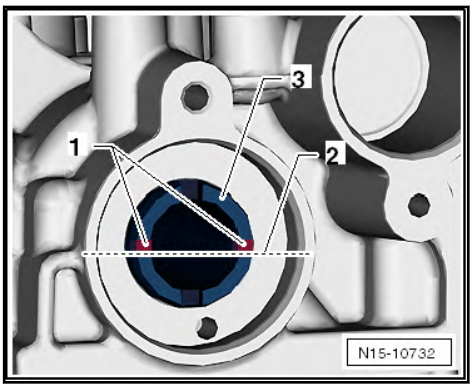

- Grooves -1- of exhaust camshaft are positioned above horizontal camshaft centre line -2-.
- The centre-line of the holes close to hub of the gear -3- is slightly above the grooves.

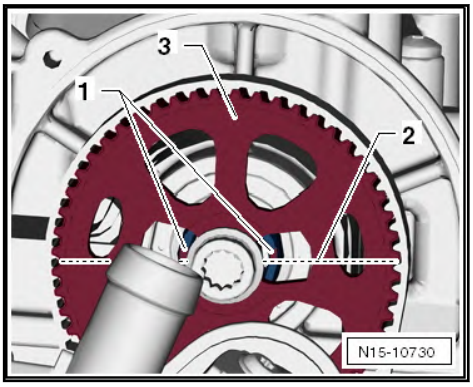

– If the grooves of the camshafts are not in the specified position, turn the crankshaft 360° further in the direction of engine rotation and check the positions again.

Specified torque:

♦ ⇒ o1.1 verview - cylinder head", page 69

15 – Cylinder head, valve gear

1 Cylinder head

⇒ o1.1 verview - cylinder head", page 69

⇒ a1.2 nd installing cylinder head", page 72

⇒ a1.3 nd installing camshaft housing", page 78

⇒ c1.4 ompression", page 83

1.1 Assembly overview - cylinder head

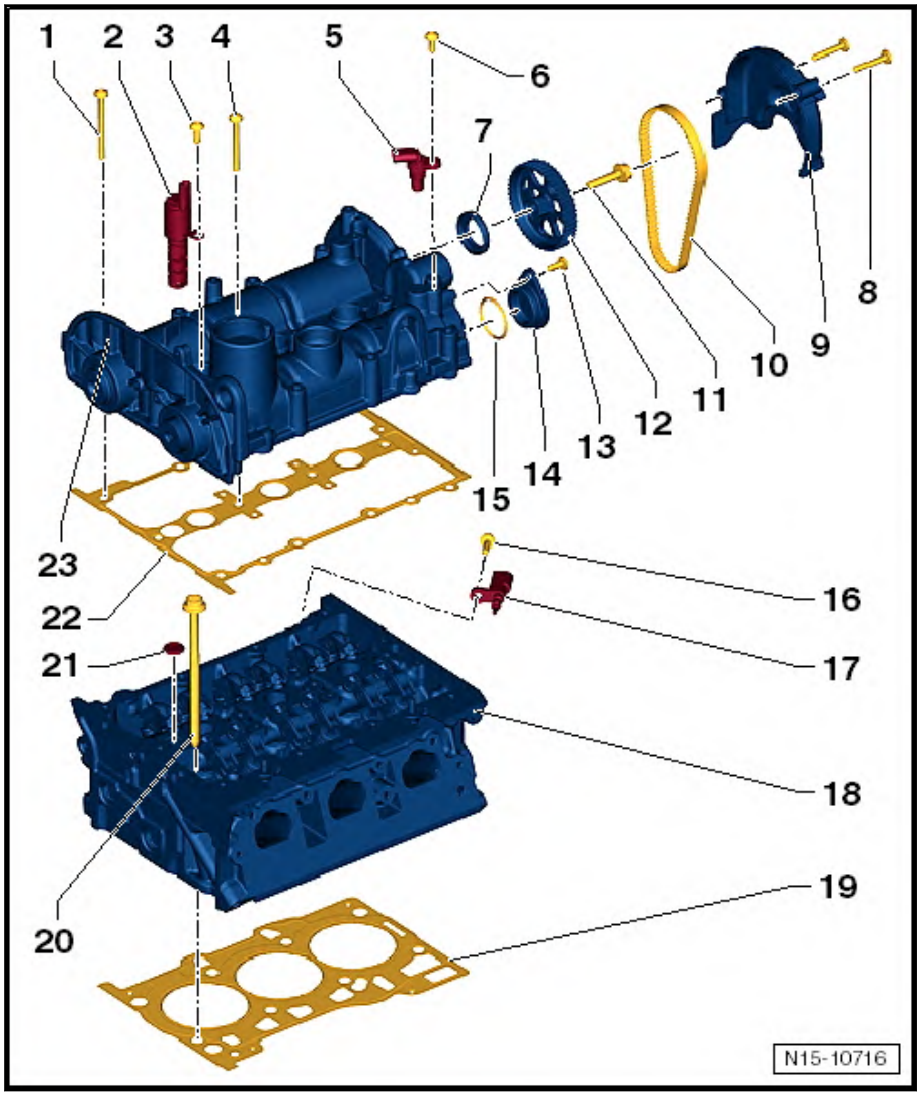

1 - Bolt

- ❑ Renew after removal
- ❑ Observe tightening sequence ⇒ a1.3 nd installing camshaft housing", page 78
- ❑ 10 Nm +180°

2 - Inlet camshaft control valve 1 -N205-

- ❑ Check O-ring for damage.
- ❑ If it is damaged, renew it together with camshaft control valve 1 -N205-.
- ❑ The O-ring cannot be renewed individually.

3 - Bolt

- ❑ 8 Nm

4 - Bolt

- ❑ Renew after removal
- ❑ Observe tightening sequence ⇒ a1.3 nd installing camshaft housing", page 78
- ❑ 10 Nm +180°

5 - Hall sender -G40-

6 - Bolt

- ❑ 8 Nm

7 - Seal

- ❑ Removing and installing ⇒ a3.5.3 nd installing camshaft oil seal, exhaust camshaft, gearbox end", page 155

8 - Bolt

- ❑ 8 Nm

9 - Toothed belt guard

10 - Poly V-belt

- ❑ For coolant pump
- ❑ Renew after removal

11 - Bolt

- ❑ 20 Nm +90°
- ❑ Renew

12 - Crankshaft

- ❑ For coolant pump drive

13 - Bolt

- ❑ 8 Nm

14 - Cap

15 - O-ring

- ❑ Renew if damaged

16 - Bolt

- ❑ 8 Nm

17 - Radiator outlet coolant -G62-

18 - Cylinder head

- ❑ Removing and installing ⇒ a1.2 nd installing cylinder head", page 72
- ❑ Reworking the valve seat is not permitted.
- ❑ Machining the cylinder head sealing surface on the cylinder block ⇒ a3.2 xial play of camshaft", page 139

19 - Seal

- ❑ Renew after removal

20 - Cylinder head bolt

- ❑ Renew after removal
- ❑ Follow installation instructions and sequence when loosening and tightening ⇒ Fig. ""Cylinder head - specified torque and sequence"", page 71 .

21 - Oil strainer

- ❑ Renew after removal
- ❑ Inserted into cylinder head

Note

- *Versions with or without oil strainers are used depending on production date.*
- *If no strainer was installed at the factory, a strainer is instead integrated in camshaft control valve 1 -N205-.*
- *Damage may result if the strainer is installed in both locations!*

22 - Seal

- ❑ Renew after removal

23 - Camshaft case

- ❑ Removing and installing ⇒ a1.3 nd installing camshaft housing", page 78

Note

- *The camshafts cannot be removed.*
- *If repair is required, the camshaft housing and the camshafts need to be renewed as a complete unit.*

Cylinder head - specified torque and sequence

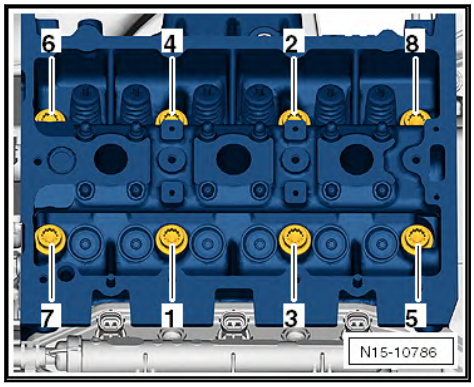

Bolt	Torque setting	Note
1st stage	40 Nm	Renew bolts
2nd stage	Turn 90° further	With rigid spanner
3rd stage	Turn 90° further	With rigid spanner
4th stage	Turn 90° further	With rigid spanner

Checking cylinder head for distortion

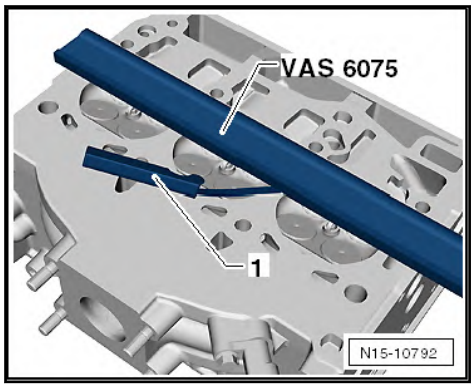

Check with 500 mm straight edge -VAS 6075- and feeler gauge -1-.

Max. permissible distortion: 0.05 mm

1.2 Removing and installing cylinder head

Special tools and workshop equipment required

- Torque wrench -V.A.G 1332-

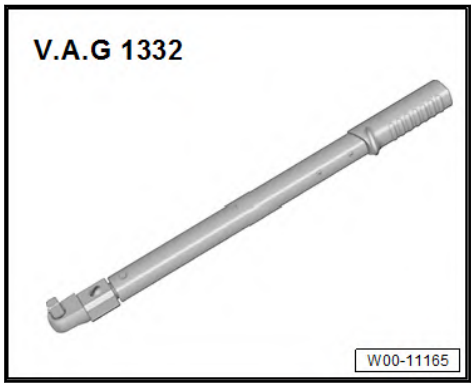

◆ Bracket -T10358-

- A modified toothed belt tensioning roller is installed on vehicles manufactured as of week 22 of 2012.
- Due to the modified tensioning roller, the engine no longer needs to be supported by means of the support bracket when removing the cylinder head.
- The removal and installation of the assembly mountings, the engine mounting bracket and the lower toothed belt guard are eliminated.

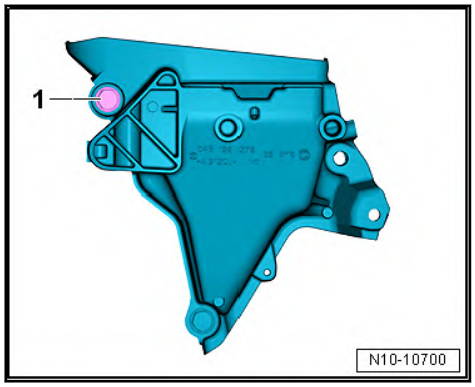

- Unscrew bolt -1- from engine support.
- The engine must be no more than warm to touch.

Removing

– Remove camshaft housing ⇒ a1.3 nd installing camshaft housing", page 78 .

– Unscrew securing bolts -1-.

– Unscrew fastening bolt from catalytic converter and remove bracket -2-.

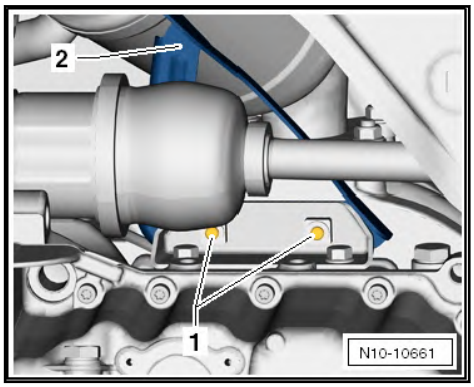

– Remove securing nuts -arrows- and pull catalytic converter off stud bolts.

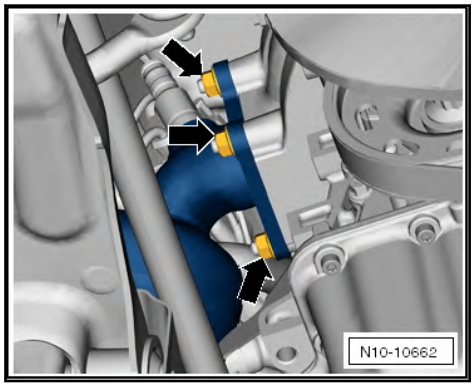

– Unscrew intake manifold support securing bolt -arrow-.
– Unclip wiring harness -1- under intake manifold.

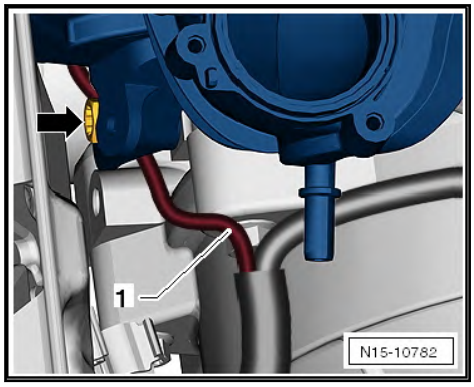

– Remove rocker fingers -1- and -2- and place them on a clean surface.

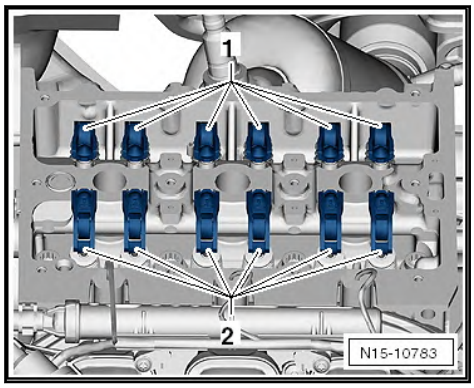

– Disconnect connectors -1- from injectors.
– Disconnect connectors -2- from activated charcoal filter solenoid valves 1 -N80-.

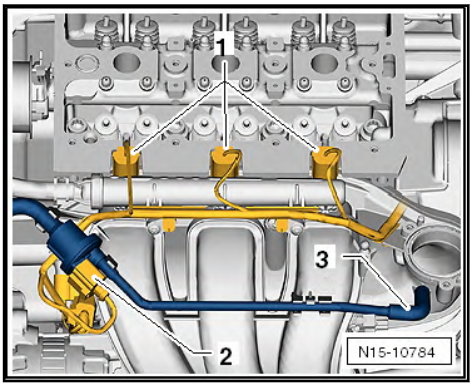

– Also disconnect connectors -arrow- from oil pressure switch and intake manifold.

– Disconnect hose -3- from intake manifold and unclip cable of activated charcoal filter solenoid valves 1 -N80-.

– Loosen cylinder head bolts -1- through -8- in sequence given and then remove completely.

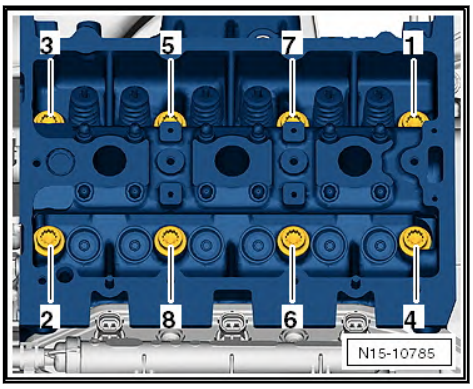

– Remove cylinder head together with intake manifold.

– Remove cylinder head gasket.

Installing

Note

- *Do not use sanding or abrasive media such as sandpaper, grinding wheels, abrasive or scour pads, or similar.*
- *Sealing surface (see photo) must not project.*
- *Discolouration (dark spots, see photo) need not be removed.*

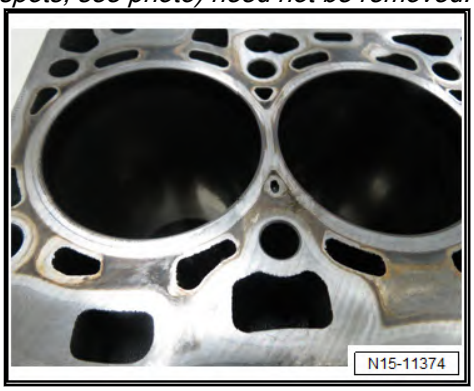

- *When removing the sealant residue, make sure no loose particles get into the open channels of the engine.*
- *Ensure that all adjacent workspaces are clean, and that none of the above mentioned sanding or abrasive media are used.*
- *Using unauthorised sanding or abrasive media may lead to secondary damage such as, for example, damage to the turbocharger or the conrod bearings.*
- *No oil or coolant must be allowed to remain in the blind holes for the cylinder head bolts in the cylinder block.*
- *Carefully remove sealant residue from cylinder head and cylinder block.*
- *Ensure that no long scores or scratches are made on the surfaces.*
- *Carefully remove remains of emery and abrasives.*
- *Do not remove new cylinder head gasket from packaging until it is ready to be fitted.*
- *Handle the cylinder head gasket very carefully to prevent damage to the silicone coating or the indented area of the gasket.*
- *Renew bolts that are tightened with turning further angle.*
- *Renew self-locking nuts as well as gaskets, seals and O-rings.*
- *If an exchange cylinder head is installed, the contact surfaces between the hydraulic compensation elements, roller rocker fingers and running surfaces of cams must be moistened with oil before fitting the camshaft housing.*
- *Secure all hose connections with hose clips corresponding to the series equipment ⇒ Electronic parts catalogue.*
- *When cylinder head or cylinder head gasket is renewed, the entire coolant and the engine oil must be changed.*

– Only remove sealant residue from cylinder head and cylinder block using scraper -VAS 852 005- or a commercially available ceramic glass scraper.

– Set no. 1 cylinder piston to top dead centre and then turn crankshaft back slightly.

– Place new cylinder head gasket -1- onto centring bushes -arrows-. Inscription (Part No.) -2- must be readable.

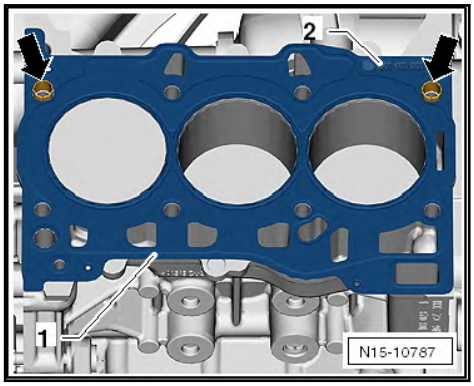

– Fit cylinder head, install 8 new cylinder head bolts and tighten by hand.

– Tighten cylinder head bolts -1- through -8- in sequence given ⇒ Fig. ""Cylinder head - specified torque and sequence"", page 71 .

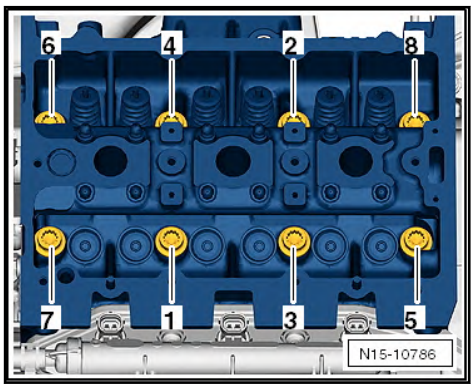

Note

- *Avoid damage to valves and piston crowns.*
- *When camshaft is turned, crankshaft must not be at TDC.*

– Install camshaft housing ⇒ a1.3 nd installing camshaft housing", page 78 .

– Adjust valve timing ⇒ v2.5 alve timing", page 120 .

– Install coolant pump ⇒ a2.3 nd installing coolant pump ", page 212 .

– Change engine oil ⇒ Maintenance; Booklet 819.

– Fill cooling system with fresh coolant ⇒ a1.3 nd adding coolant", page 198 .

Further assembly is basically a reverse of the dismantling sequence.

Torque settings

- ⇒ o1.1 verview - cylinder head", page 69
- ⇒ o2.1 verview – emission control", page 296
- ⇒ o2.1 verview - coolant pump", page 206
- ⇒ o4.1 verview – intake manifold", page 262

1.3 Removing and installing camshaft housing

Note

- *The camshafts cannot be removed.*
- *If repair is required, the camshaft housing and the camshafts need to be renewed as a complete unit.*
- *A modified tensioning roller is installed in vehicles from week 22, 2012.*
- *Removal of the engine support is no longer necessary with the modified tensioning roller.*

Special tools and workshop equipment required

- Special wrench -T10499A-

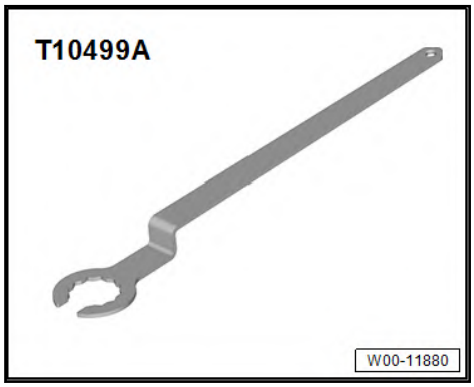

- Insert tool -T10500-

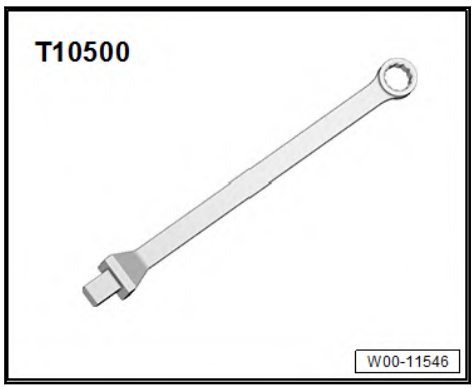

- Assembly tool -T10476A-

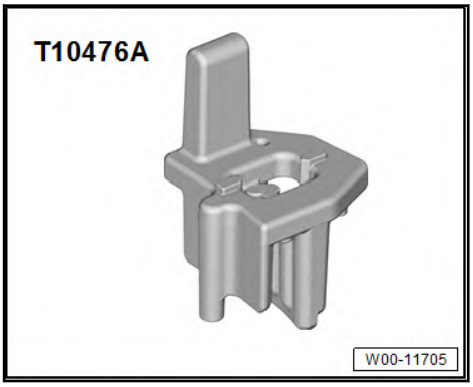

- Locating bolt -T10340-

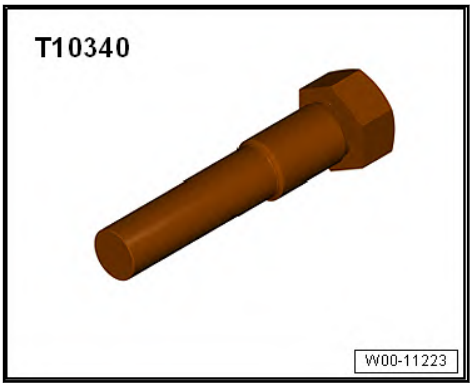

- Camshaft clamp -T10477-

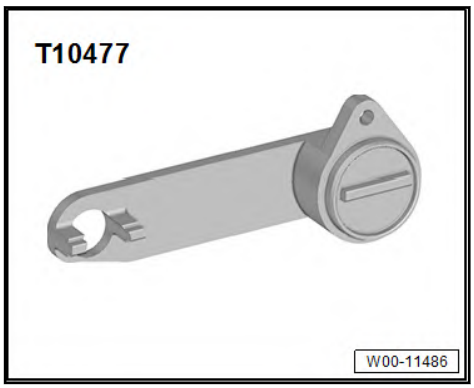

- Counter-hold tool -T10172A-

Removing

– Disconnect battery earth strap with ignition switched off.

Procedure for vehicles manufactured up to week 22 of 2012

– Support engine in its installation position ⇒ e2.5.2 ngine in installation position, on crankcase", page 27 .

Continued for all vehicles

– Detach toothed belt from camshafts. ⇒ t2.6 oothed belt from camshaft", page 131

– Disconnect connector -arrows- and unclip line guide from camshaft housing.

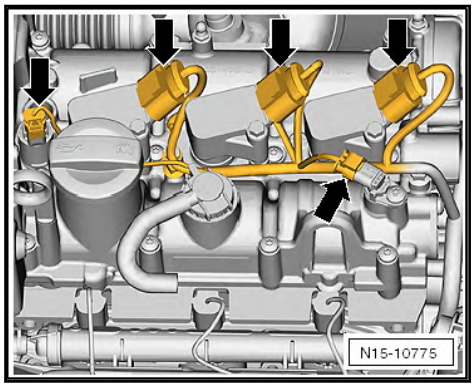

– Pull out oil dipstick -1- and unscrew securing bolts -2- of ignition coils with output stages.

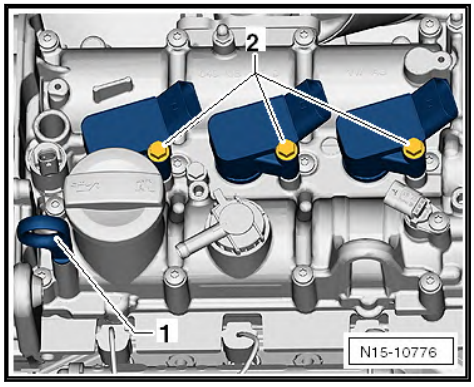

– Pull off ignition coils with output stages from spark plugs.

– Loosen securing bolts -1- through -12- of camshaft housing in sequence given and then remove completely.

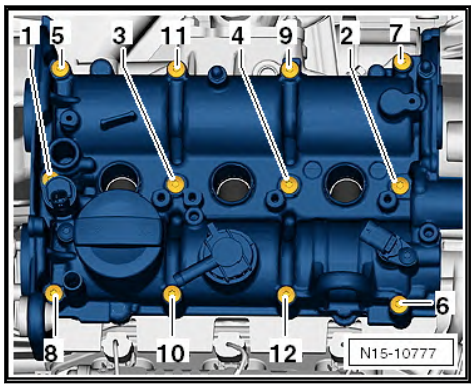

– Lift off camshaft housing vertically from cylinder head.

– Remove gasket.

– Clean sealing surfaces. They must be free of oil and grease.

Installing

Condition

- The pistons cannot be positioned at TDC.

Note

If a piston is at TDC, the valves could strike the piston when the camshafts turn.

– Ensure that all roller rocker fingers are correctly clipped into the valve stem ends -1- and into their respective support elements -2-.

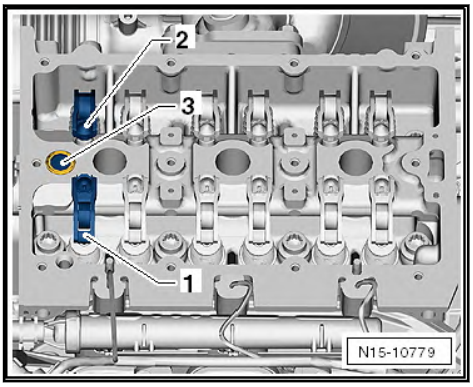

Note

- *Versions with or without oil strainers are used depending on production date.*
- *If no strainer was installed at the factory, a strainer is instead integrated in camshaft control valve 1 -N205-.*
- *Damage may result if the strainer is installed in both locations!*

– Renew seal and oil strainer -3-.

– Fit new gasket -1- onto dowel pins -2-.

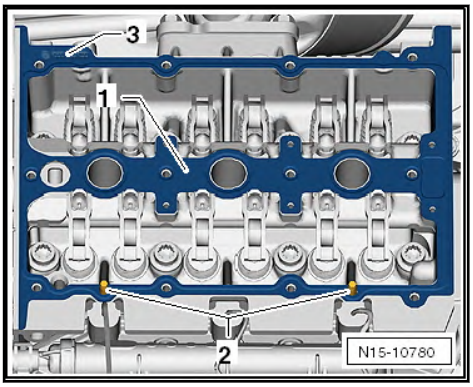

Part number -3- of gasket must be readable from above.

Note

- *Risk of roller rocker fingers slipping off valve stem ends and compensation elements.*
- *Slowly fit camshaft housing vertically from above onto cylinder head.*

– Carefully fit camshaft housing vertically from above onto dowel pins -arrows-.

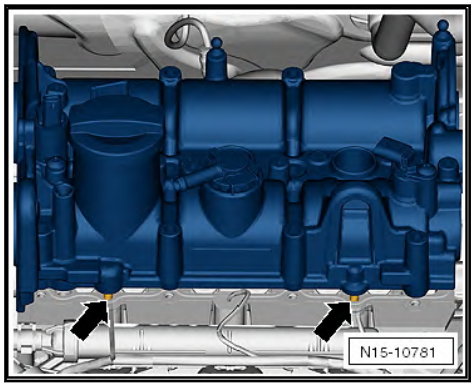

Note different bolt lengths.

– Tighten new securing bolts of camshaft housing in specified sequence -1- through -12-.

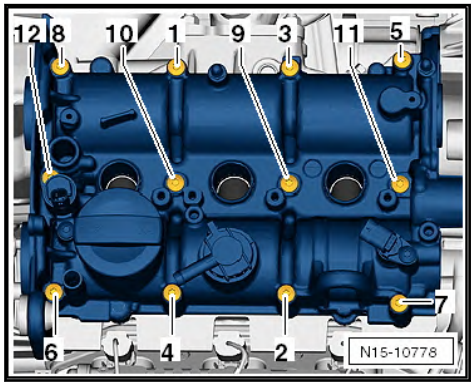

– Tighten securing bolt -arrow- of earth strap.

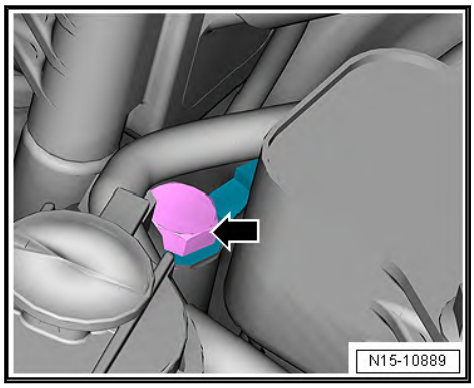

Bolt	Torque settings
-Arrow-	8 Nm

– Fit toothed belt onto camshafts. ⇒ t2.6 oothed belt from camshaft", page 131

Fit thermostat cap ⇒ a2.4.2 nd installing thermostat for main coolant circuit (radiator)", page 220 .

– Add coolant ⇒ a1.3 nd adding coolant", page 198 .

Further assembly is basically a reverse of the dismantling sequence.

Torque settings

- Securing bolts for assembly mountings ⇒ o2.1 verview - assembly mountings", page 20
- Securing bolts of ignition coil with final output stage ⇒ o1.1 verview - ignition system", page 303

1.4 Checking compression

Special tools and workshop equipment required

- Spark plug socket -3122 B-

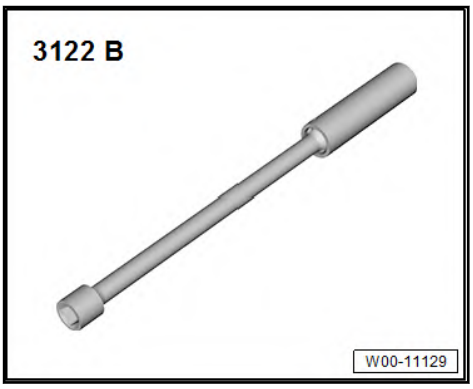

- Compression tester -V.A.G 1763-

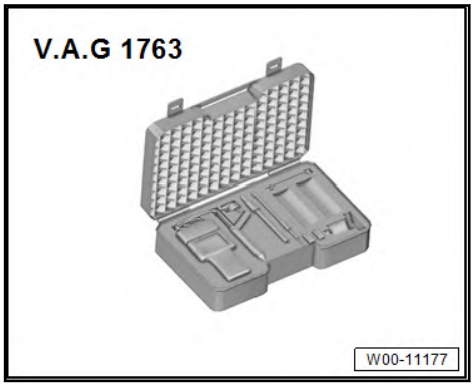

- Adapter -V.A.G 1763 /12- (not shown)

Prerequisites for check

- The engine oil temperature must be at least 30°C.

Test sequence

– Remove air filter housing ⇒ a3.2 nd installing air filter housing", page 260 .

– Disconnect connectors -1- from ignition coils.

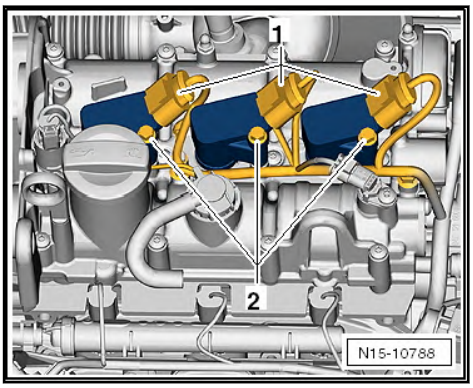

– Unscrew securing bolts -2- and pull off ignition coils from spark plugs.

– Unscrew spark plugs using spark plug socket and extension -3122 B-.

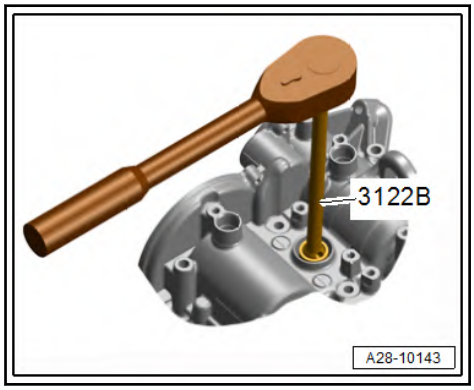

– Remove fuse for injectors. Fuse assignment ⇒ Current flow diagrams, Electrical fault finding and Fitting locations

– Screw adapter -V.A.G 1763 /12- into spark plug thread, and tighten it slightly.

– Bolt compression tester -V.A.G 1763- to adapter -V.A.G 1763 /12-.

– Check compression pressure using compression tester -V.A.G 1763-; refer to ⇒ Operating instructions.

– Operate starter until tester shows no further pressure increase.

Compression pressures

Compression pressures	bar
New	10 … 15 bar
Wear limit	7 bar
Permissible deviation between cylinders	3 bar

Assembling

Assembly is carried out in reverse sequence; note the following:

– Install spark plugs ⇒ Maintenance; Booklet 819.

– Install ignition coils ⇒ a1.2 nd installing ignition coils with output stage", page 305 .

– Clear any entries in event memory which may have been stored when checking ⇒ Vehicle diagnostic tester, `Read event memory`, then `Generate readiness code`.

2 Toothed belt drive

⇒ o2.1 verview - toothed belt", page 85
⇒ a2.2 nd installing toothed belt", page 87
⇒ a2.3 nd installing valve timing tool", page 108
⇒ v2.4 alve timing", page 116
⇒ v2.5 alve timing", page 120
⇒ t2.6 oothed belt from camshaft", page 131

2.1 Assembly overview - toothed belt

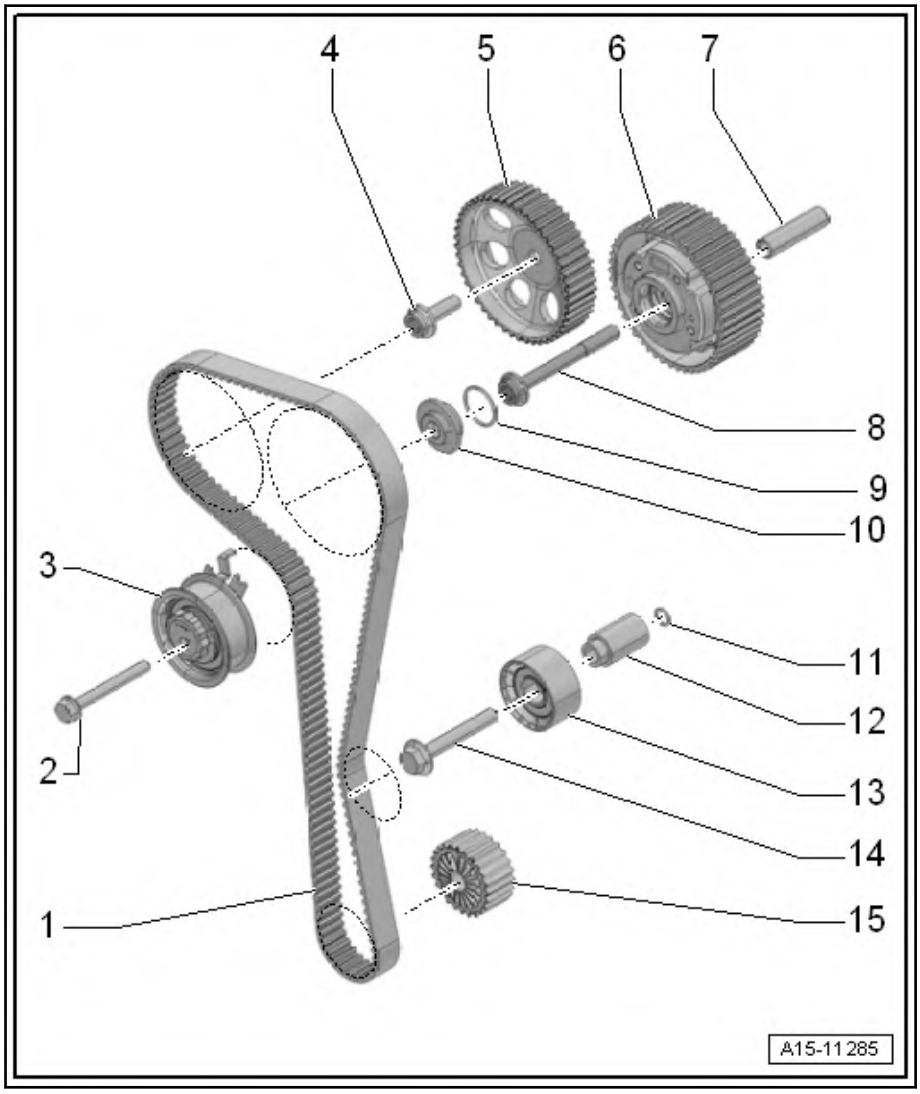

1 - Toothed belt

- ❑ Before removing, mark direction of rotation with chalk or felt-tipped marker pen.
- ❑ Removing and installing ⇒ a2.2 nd installing toothed belt", page 87
- ❑ Adjusting valve timing ⇒ v2.5 alve timing", page 120

2 - Bolt

- ❑ 25 Nm

3 - Tensioning pulley

- ❑ Removal and installation involve removing engine support ⇒ a1.4 nd installing engine support", page 41 .

4 - Bolt

- ❑ Renew
- ❑ 50 Nm +90°

5 - Exhaust camshaft toothed belt pulley

- ❑ Removing and installing ⇒ a3.4 nd installing toothed belt pulley", page 146

6 - Inlet camshaft toothed belt pulley

- ❑ With camshaft adjuster
- ❑ Removing and installing camshaft adjuster ⇒ a3.3 nd installing camshaft adjuster", page 140

7 - Guide sleeve

8 - Bolt

- ❑ Renew
- ❑ 50 Nm +90°

9 - O-ring

- ❑ Check for damage, and renew if necessary; see ⇒ Electronic parts catalogue (ETKA)

10 - Plug

- ❑ 20 Nm
- ❑ Renew

11 - O-ring

- ❑ Captive, supplied with "item 13".
- ❑ Renew

12 - Spacer sleeve

- ❑ Supplied with item "13".
- ❑ Renew

13 - Idler roller

14 - Bolt

- ❑ 40 Nm

15 - Crankshaft pulley

- ❑ Contact surface between toothed belt pulley and crankshaft must be free from oil
- ❑ Can only be fitted in one position

Plug for “TDC” drilling in cylinder block - specified torque

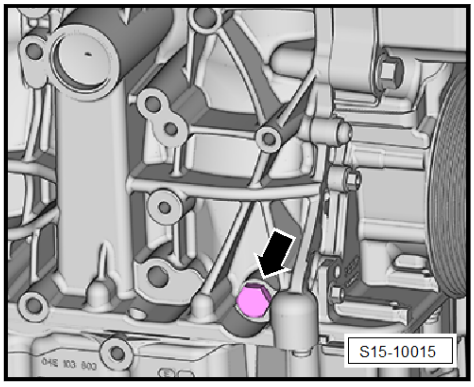

Note

Renew O-ring if damaged.

– Tighten bolt -arrow- to 30 Nm.

2.2 Removing and installing toothed belt

⇒ a2.2.1 nd installing toothed belt, ▸22.2012”, page 87

⇒ a2.2.2 nd installing toothed belt, 22.2012▸”, page 97

2.2.1 Removing and installing toothed belt, ▸22.2012

Note

From week 22 of 2012, a modified belt tensioner which simplifies the adjustment of the valve timing is installed.

Special tools and workshop equipment required

- ♦ Assembly tool -T10476A-

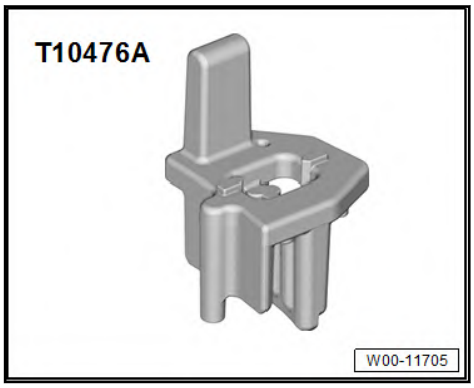

- Locating bolt -T10340-

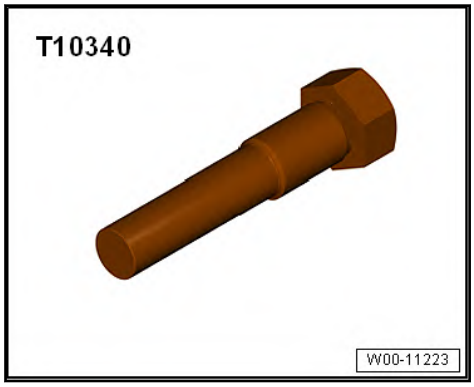

- Torque wrench -V.A.G 1332-

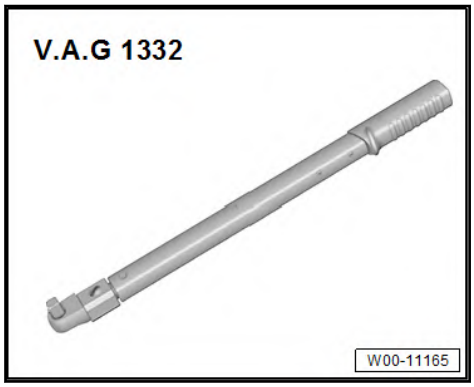

- Counterhold tool -T10475-

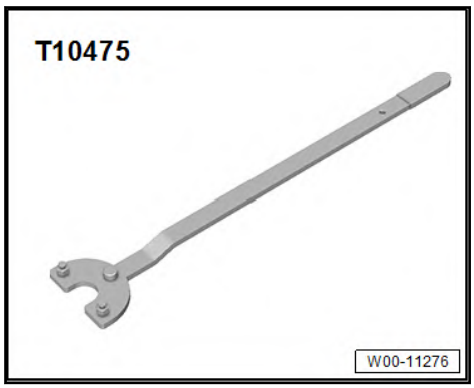

Removing

– Set piston of cylinder no. 1 to “TDC” position. ⇒ p4.4 iston to TDC position”, page 66

– Remove poly V-belt ⇒ a1.3 nd installing poly-V belt”, page 38 .

– Support engine in installation position. ⇒ e2.5.1 ngine in installation position, on camshaft housing (right-side)”, page 24

– Unscrew earth wire -1-.

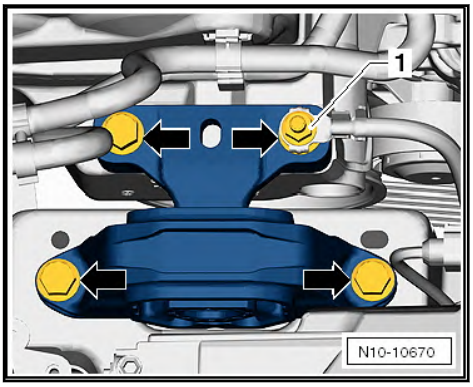

– Unscrew securing bolts -arrows- and remove assembly mounting on engine side.

– Unscrew securing bolt -1- and swivel alternator in -direction of arrow-.

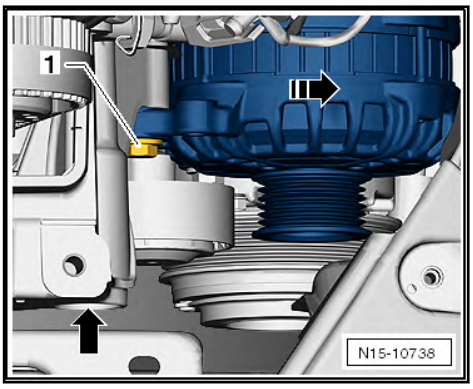

• Lift motor up sufficiently by turning spindle in order to allow for unscrewing securing bolt of engine mounting bracket.

– Unscrew securing bolts -2- of engine mounting bracket and 3 bolts -1- of lower toothed belt guard.

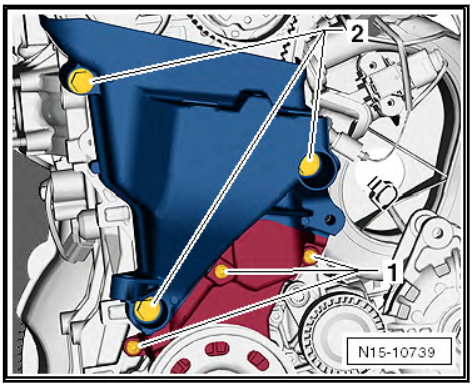

– Lift out engine mounting bracket upwards.

NOTICE

Risk of damage to camshaft caused by improper handling.

– **Never use the camshaft clamp for counter holding.**

– Mark direction of rotation of toothed belt with marker.

Note

- *A small amount of oil can leak out while loosening the plug.*
- *To prevent the toothed belt from coming into contact with engine oil, place a cloth underneath the plug when loosening it.*

– Loosen plug of securing bolt for camshaft adjuster and unscrew ⇒ a3.3 nd installing camshaft adjuster", page 140 .

Note

When adjusting the valve timing, both camshaft pulleys must be loose.

- Securing bolts -1- and -2- must have been loosened.

– Loosen camshaft adjuster and toothed belt pulley. ⇒ a3.3 nd installing camshaft adjuster", page 140

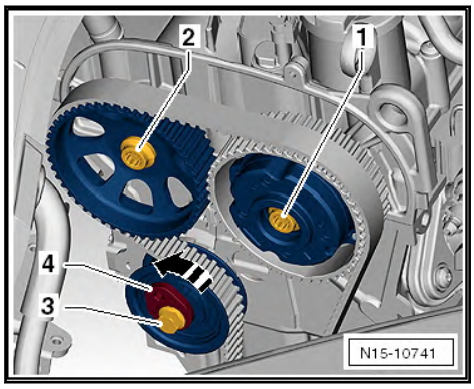

– Loosen securing bolt -3- of belt tensioner, and relieve tension of belt tensioner by turning eccentric -4- (hexagon socket insert) in -direction of arrow-.

Bend radius of toothed belt

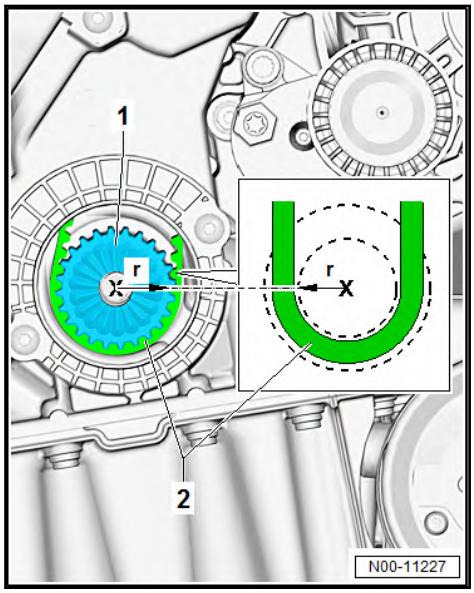

NOTICE

Risk of damage to toothed belt by bending it excessively. The toothed belt is made of glass fibre fabric which will be damaged if it is bent excessively.

– **Never bend toothed belt to a radius less than r = 25 mm.**

Never kink any toothed belts, regardless of whether they are used or new.

The bend radius -r- on the toothed belt -2- should therefore never be below 25 mm (approx. half diameter of gear -1- on crankshaft) ⇒ page 90 .

– Push toothed belt from camshaft pulleys.

– Hold vibration damper using counter-hold tool -T10475-.

– Unscrew bolts -1- and remove vibration damper.

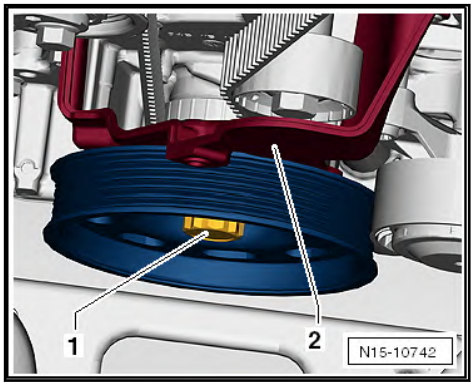

– Unscrew bolts -arrows-, remove lower toothed belt guard -2-.

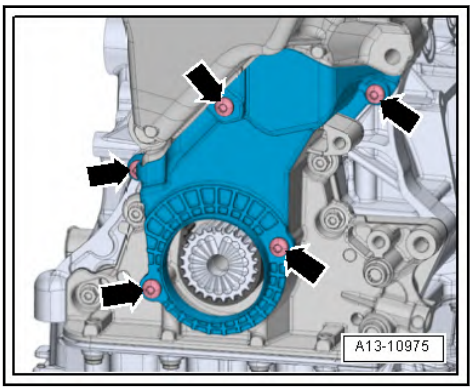

– Remove toothed belt -1- together with crankshaft sprocket -2- from crankshaft stub.

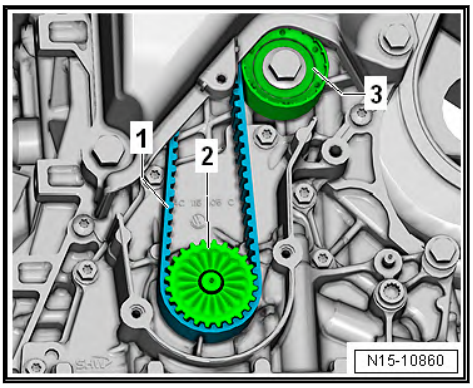

Disregard item -3-.

Installing

– Push crankshaft sprocket onto crankshaft stub to stop.

Milled surface of crankshaft sprocket -arrow- must be positioned on milled surface of crankshaft stub.

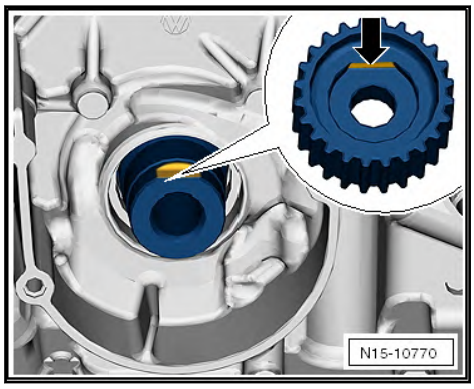

– Fit toothed belt -1- onto toothed belt pulley -2-.

When existing toothed belt is reused:

Note arrow for direction of rotation.

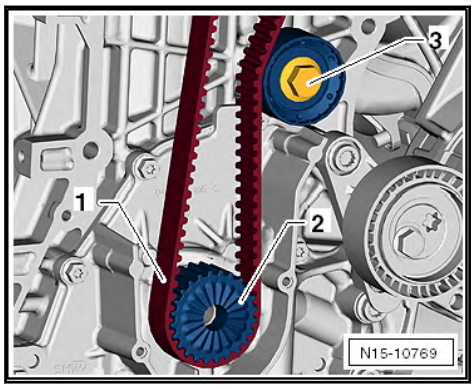

Specified torque for idler pulley -3-: 45 Nm

– Install toothed belt guard -2-, and tighten the two lower securing bolts.

Remaining toothed belt guard securing bolts will be installed later.

NOTICE

Risk of damage to camshaft caused by improper handling.

– **Never use the camshaft clamp for counter holding.**

– Tighten securing bolt -1- of crankshaft vibration damper.

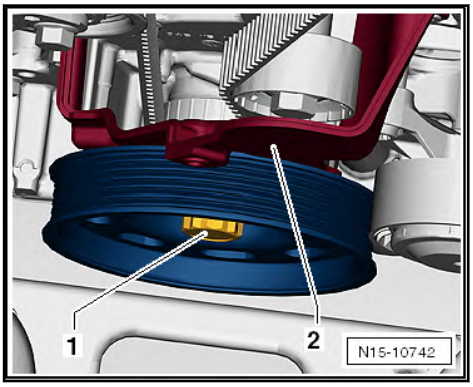

– Loosen securing bolts of camshaft pulleys -1- and -2- until pulleys can be rotated easily by hand.

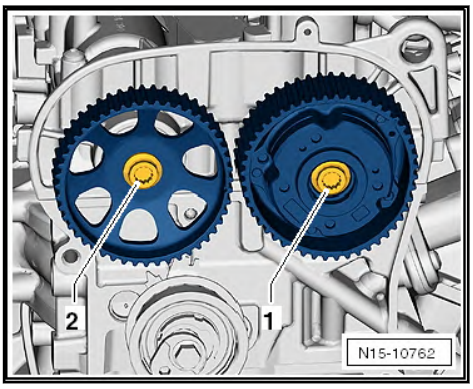

Note

- *The camshaft pulleys are not circular.*
- *If one or both camshaft pulleys have been loosened, they must be properly aligned with each other.*
- *It should just be possible to turn camshaft pulleys on camshafts but no rocking is permissible.*
- *The toothed belt has not yet been fitted.*

Align marked gap -1- in teeth of camshaft adjuster -3- with lug -2- of camshaft housing.

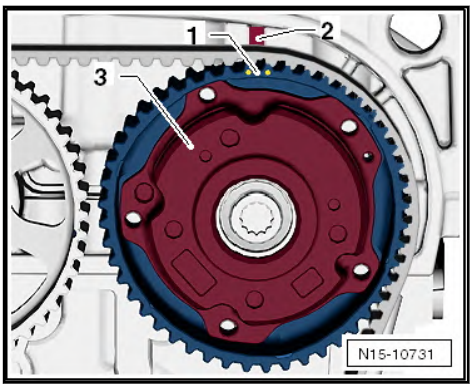

Align marked tooth -1- of exhaust camshaft pulley -3- with lug -2- of camshaft housing.

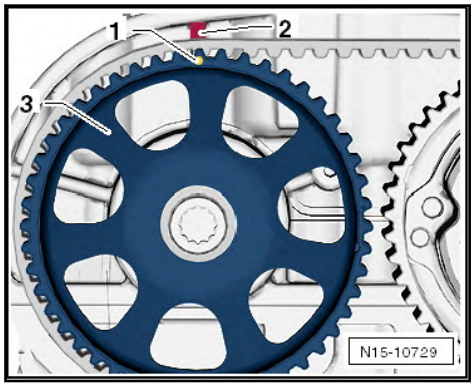

– Markings -1- and -2- on camshaft pulleys are aligned as shown.

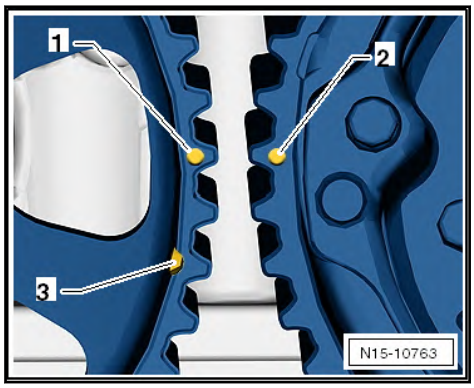

Groove -3- for assembly tool -T10476A- is located on exhaust camshaft pulley.

– Insert assembly tool -T10476A- between camshaft pulleys.

– Arrows -1- on assembly tool are aligned with marks -2- on camshaft pulleys.

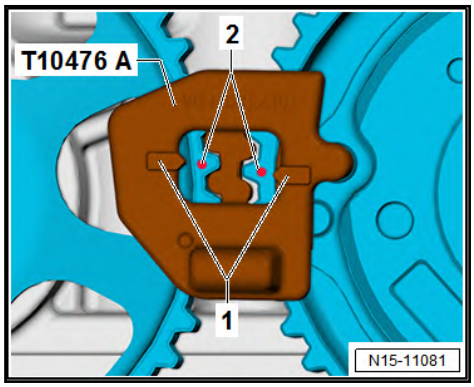

Note

When the assembly tool -T10476A- is inserted, the marks -2- on the camshaft pulleys are slightly offset.

– Dowel pin -1- of assembly tool -T10476A- must engage in groove -2- of exhaust camshaft pulley.

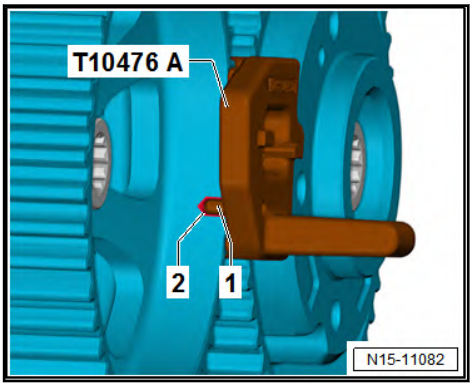

– Hand-tighten tensioning roller -3- on cylinder head.
– Hook -1- must be positioned in recess -2-.

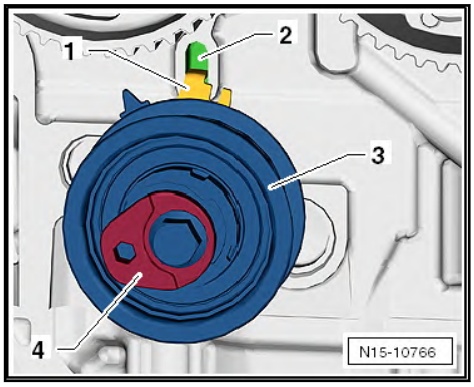

– Orientation of eccentric -4- of tensioning roller must be as shown.

Note

- *In this position, the tensioning roller is completely free of tension.*
- *When installing the toothed belt, ensure that the assembly tool -T10476A- is correctly positioned between the camshaft pulleys.*

– Toothed belt must make full contact with crankshaft pulley.
– Check that crankshaft is set to TDC for No. 1 cylinder.

The crankshaft must make contact with the locking pin -T10340- in direction of engine rotation.

– Fit toothed belt -1- onto belt tensioner -5- and camshaft pulley -2-.

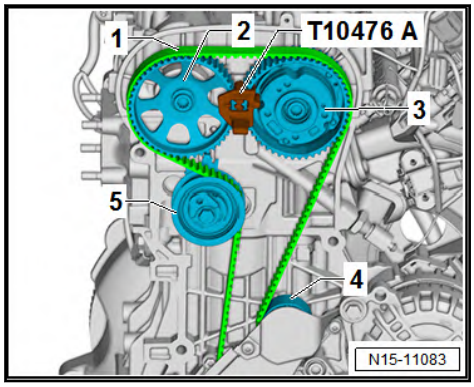

– Then fit toothed belt on camshaft adjuster -3- and on idler pulley -4-.
– Remove assembly tool -T10476A- from camshaft pulleys.
– First, rotate eccentric -1- in -direction of arrow- until adjustment pointer -2- is located approx. 10 mm to the right from adjustment window -3-.
– Then, rotate eccentric of belt tensioner back using hexagon socket insert at position -1- until adjustment pointer -2- is exactly centred in adjustment window -3-.

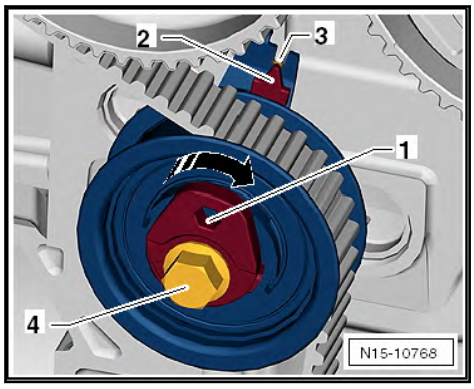

– Hold eccentric in that position using hexagon socket insert at position -1-.
– Tighten securing bolt -4- to 25 Nm.

Note

- *When the engine has been rotated by hand or by engine operation, the position of the adjustment pointer -2- might be slightly offset from the adjustment window -3-.*
- *However, this has no relevant influence on the valve timing. The toothed belt does not need to be retensioned.*

– Install lower toothed belt guard ⇒ o1.2 verview - cylinder block (pulley end)", page 36 .
– Adjust valve timing ⇒ v2.5 alve timing", page 120 .

Note

After completing work, it is essential to make sure that the locking pin -T10340- has been removed.

Further assembly is basically a reverse of the dismantling sequence.

Torque settings

- ⇒ o2.1 verview - toothed belt", page 85
- ⇒ o1.2 verview - cylinder block (pulley end)", page 36 .
- ⇒ o2.1 verview - assembly mountings", page 20 .

2.2.2 Removing and installing toothed belt, 22.2012▸

Note

From week 22 of 2012, a modified belt tensioner which simplifies the adjustment of the valve timing is installed.

Special tools and workshop equipment required

- Counterhold -T10172A- with adapter -T10172/1- and -T10172/2-

- Locating bolt -T10340-

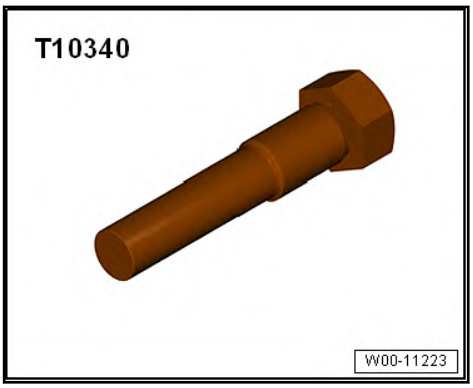

- Counterhold tool -T10475-

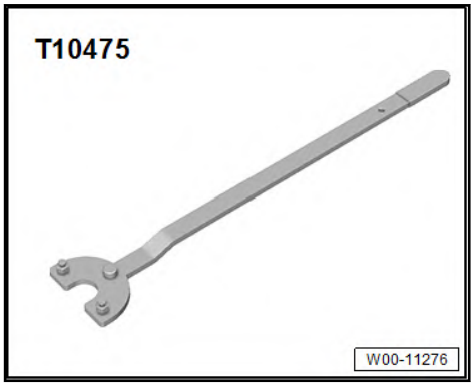

- Special wrench, 30 mm -T10499A-

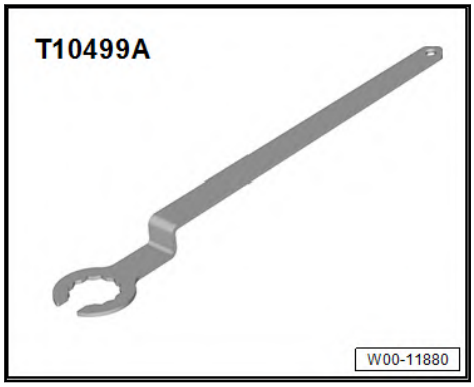

- Insert tool -T10500-

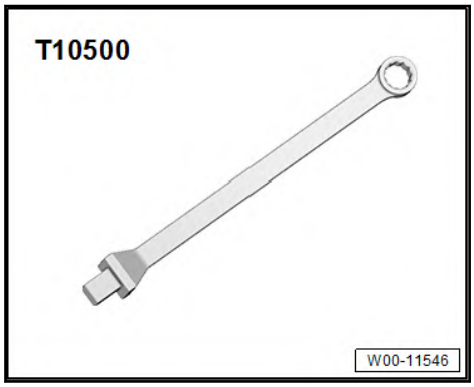

- Assembly tool -T10487-

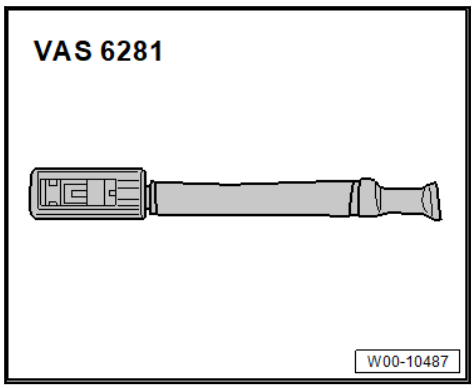

Removing

– Set piston of cylinder no. 1 to “TDC” position. ⇒ p4.4 iston to TDC position”, page 66

– Mark direction of rotation of toothed belt with marker.

– Remove poly V-belt ⇒ a1.3 nd installing poly-V belt”, page 38 .

– Unscrew securing bolt -1- and swivel alternator in -direction of arrow-.

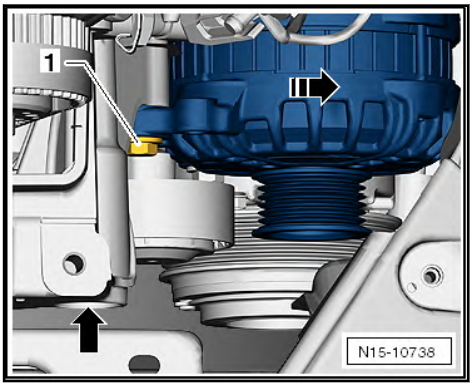

NOTICE

Risk of damage to camshaft caused by improper handling.

– **Never use the camshaft clamp for counter holding.**

– Mark direction of rotation of toothed belt with marker.

Note

- *A small amount of oil can leak out while loosening the plug.*
- *To prevent the toothed belt from coming into contact with engine oil, place a cloth underneath the plug when loosening it.*

– Loosen plug of securing bolt for camshaft adjuster and unscrew ⇒ a3.3 nd installing camshaft adjuster", page 140 .

Note

When adjusting the valve timing, both camshaft pulleys must be loose.

– Loosen securing bolt of camshaft adjuster ⇒ a3.3 nd installing camshaft adjuster", page 140 .

– Loosen securing bolt of toothed belt pulley ⇒ a3.4 nd installing toothed belt pulley", page 146 .

– Loosen bolt -1- with tool insert -T10500-.

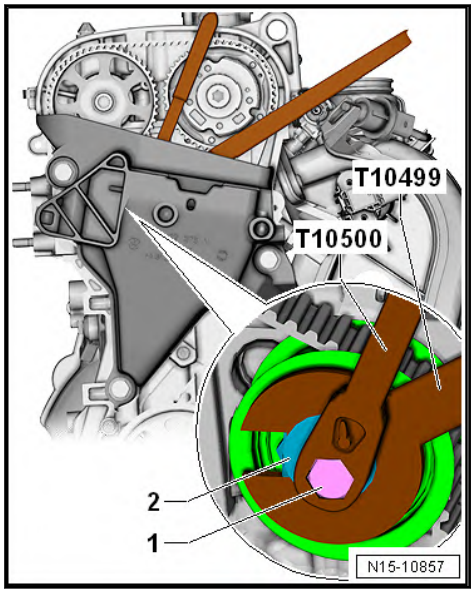

– Relieve tension on tensioning roller at eccentric -2- using wrench -T10499- or wrench -T10499A-.

Bend radius of toothed belt

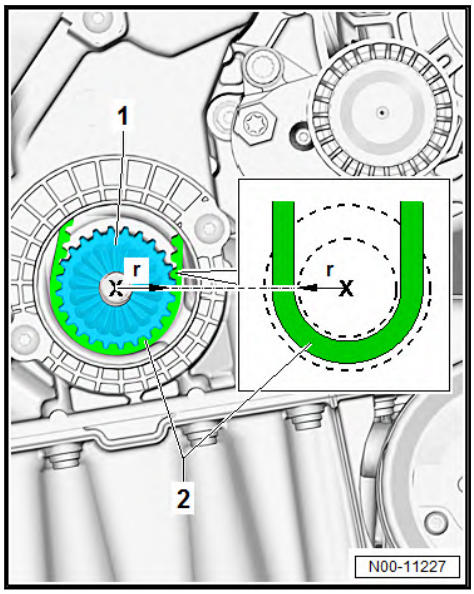

NOTICE

Risk of damage to toothed belt by bending it excessively. The toothed belt is made of glass fibre fabric which will be damaged if it is bent excessively.

– **Never bend toothed belt to a radius less than r = 25 mm.**

Never kink any toothed belts, regardless of whether they are used or new.

The bend radius -r- on the toothed belt -2- should therefore never be below 25 mm (approx. half diameter of gear -1- on crankshaft) ⇒ page 100 .

– Push toothed belt from camshaft pulleys.

– Hold vibration damper using counter-hold tool -T10475-.

– Unscrew bolts -1- and remove vibration damper.

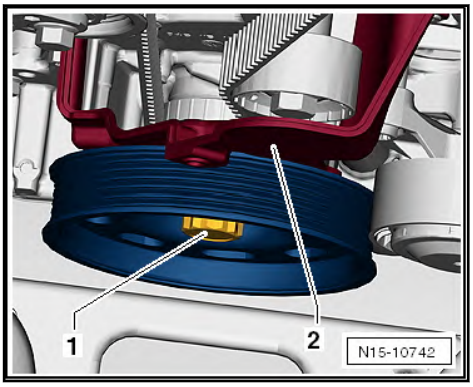

– Unscrew bolts -arrows-, remove lower toothed belt guard -2-.

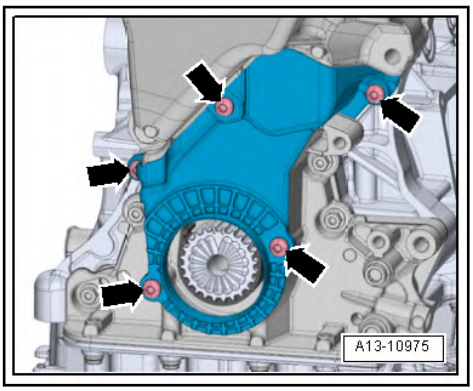

– Remove toothed belt -1- together with crankshaft sprocket -2- from crankshaft stub.

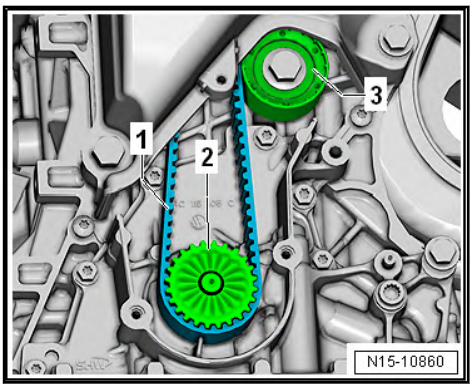

Disregard item -3-.

Installing

The sheet-metal tab -arrow- of the tensioning roller must engage in the cast notch in the cylinder head.

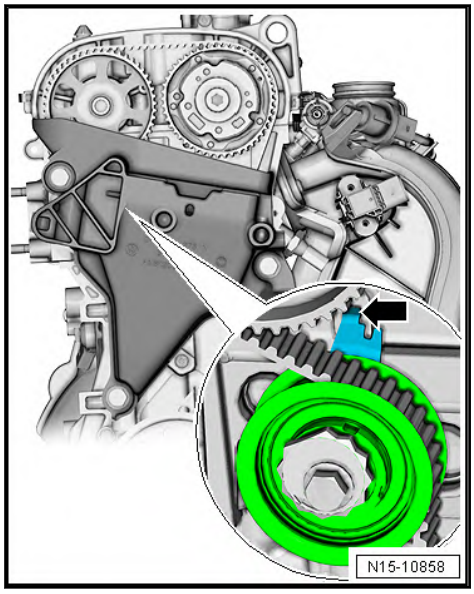

– Push crankshaft sprocket onto crankshaft stub to stop.

Milled surface of crankshaft sprocket -arrow- must be positioned on milled surface of crankshaft stub.

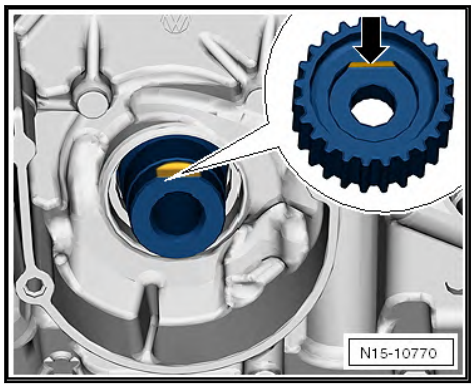

– Fit toothed belt -1- onto toothed belt pulley -2-.

When existing toothed belt is reused:

Note arrow for direction of rotation.

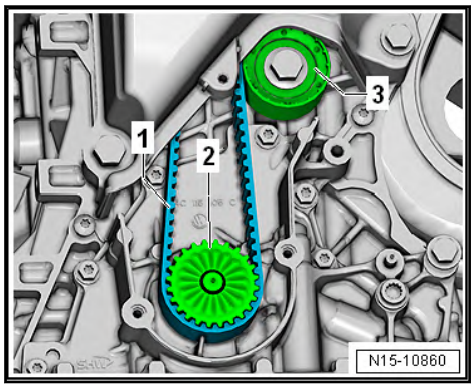

– Guide toothed belt to camshaft pulleys through console for engine mounting bracket.

Specified torque for idler pulley -3-: 45 Nm

– Fit toothed belt guard, and tighten securing bolts -arrows- to 8 Nm.

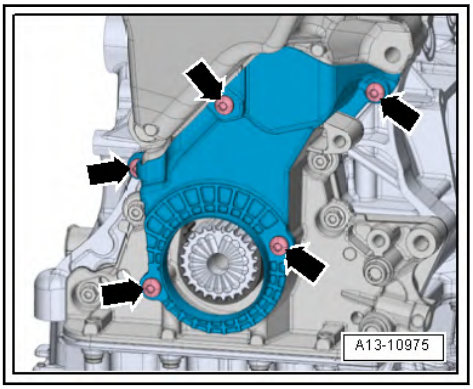

– Install vibration damper.

NOTICE

Risk of damage to camshaft caused by improper handling.

– **Never use the camshaft clamp for counter holding.**

– Tighten securing bolt -1- of crankshaft vibration damper.

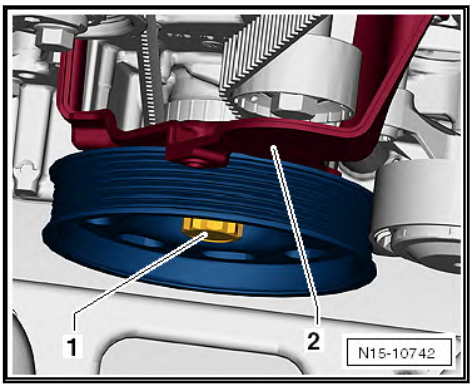

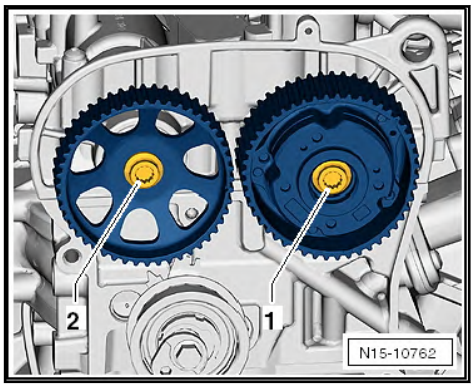

- Securing bolts of camshaft pulleys -1- and -2- must have been loosened sufficiently to enable pulleys to be rotated easily by hand.

Note

- *The camshaft pulleys are not circular.*
- *If one or both camshaft pulleys have been loosened, they must be properly aligned with each other.*
- *It should just be possible to turn camshaft pulleys on camshafts but no rocking is permissible.*
- *The toothed belt has not yet been fitted.*

Align marked gap -1- in teeth of camshaft adjuster -3- with lug -2- of camshaft housing.

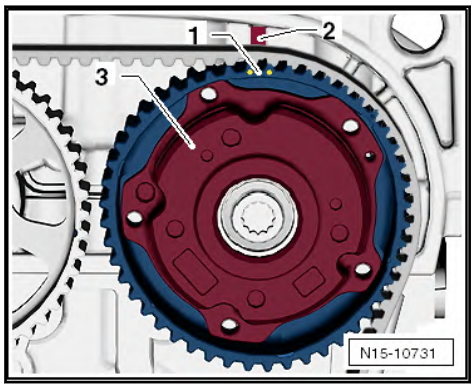

Align marked tooth -1- of exhaust camshaft pulley -3- with lug -2- of camshaft housing.

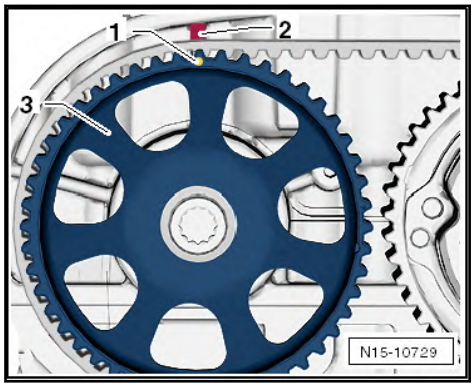

– Markings -1- and -2- on camshaft pulleys are aligned as shown.

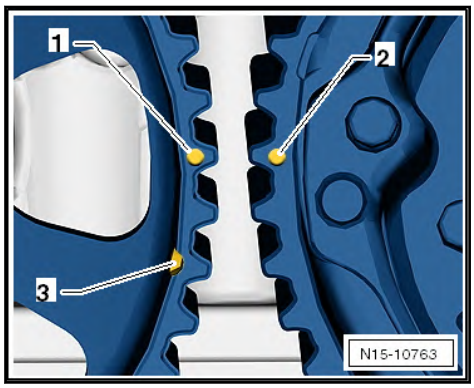

Groove -3- for assembly tool -T10476A- is located on exhaust camshaft pulley.

– Insert assembly tool -T10476A- between camshaft pulleys.
– Arrows -1- on assembly tool are aligned with marks -2- on camshaft pulleys.

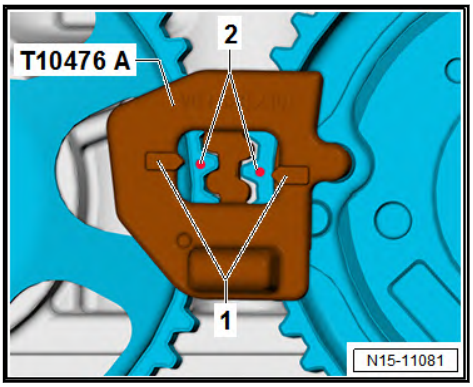

Note

When the assembly tool -T10476A- is inserted, the marks -2- on the camshaft pulleys are slightly offset.

– Dowel pin -1- of assembly tool -T10476A- must engage in groove -2- of exhaust camshaft pulley.

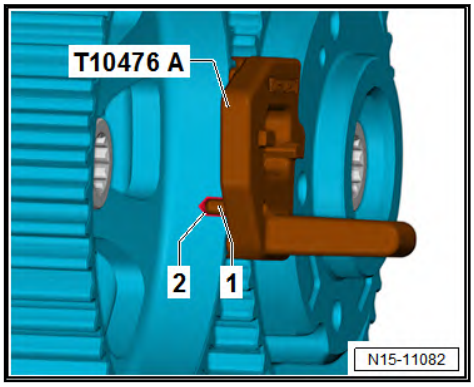

– Hand-tighten belt tensioner on cylinder head.

The sheet-metal tab -arrow- of the tensioning roller must engage in the cast notch in the cylinder head.

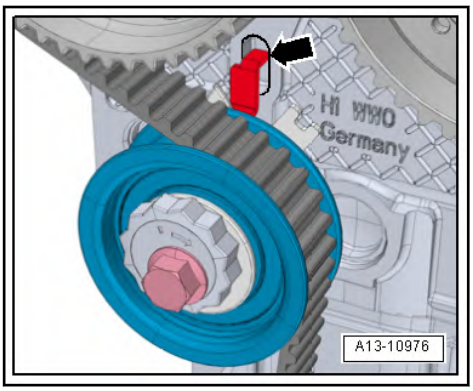

Note

When installing the toothed belt, ensure that the assembly tool -T10476A- is correctly positioned between the camshaft pulleys.

– Toothed belt must make full contact with crankshaft pulley.

– Check that crankshaft is set to TDC for No. 1 cylinder.

The crankshaft must make contact with the locking pin -T10340- in direction of engine rotation.

– Fit toothed belt -1- onto belt tensioner -5- and camshaft pulley -2-.

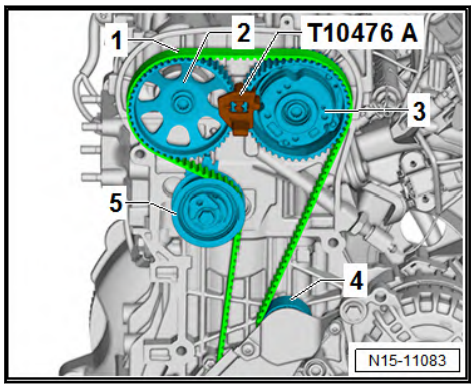

– Then fit toothed belt on camshaft adjuster -3- and on idler pulley -4-.

– Remove assembly tool -T10476A- from camshaft pulleys.

– Rotate eccentric -2- of belt tensioner using tensioning spanner -T10499- in -direction of arrow- until adjustment pointer -3- is located approx. 10 mm to the right from adjustment window.

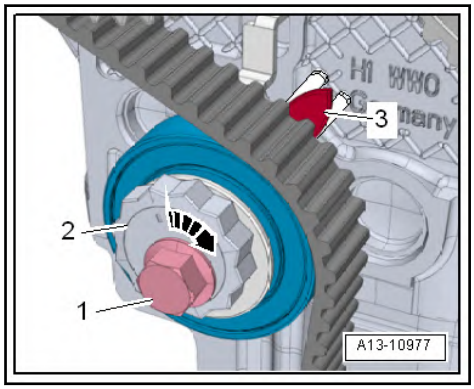

– Then rotate eccentric of belt tensioner back on 12-point surface -2- until adjustment pointer -3- is exactly centred in adjustment window.

– Hold eccentric on 12-point surface -2- in this position.

Note

- *Risk of damage to engine due to incorrect tightening torque.*
- *Torque wrench -VAS 6583- must be used for tightening.*
- *When setting the specified torque on the torque wrench -VAS 6583-, the length indicated on insert tool, 13 mm -T10500- must be entered in the torque wrench.*

– Tighten securing bolt -1- to 25 Nm.

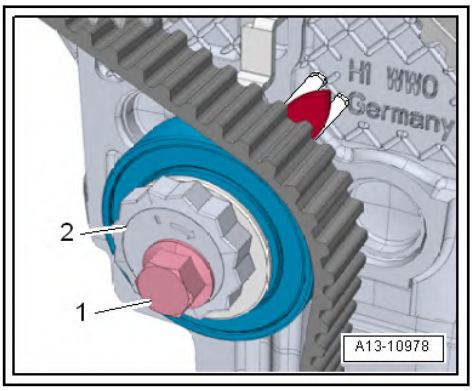

Note

- *When the engine has been rotated by hand or by engine operation, the position of the adjustment pointer -2- might be slightly offset from the adjustment window -3-.*
- *However, this has no relevant influence on the valve timing. The toothed belt does not need to be retensioned.*

– Install lower toothed belt guard ⇒ o1.2 verview - cylinder block (pulley end)", page 36 .

– Adjust valve timing ⇒ v2.5 alve timing", page 120 .

Note

After completing work, it is essential to make sure that the locking pin -T10340- has been removed.

Further assembly is basically a reverse of the dismantling sequence.

Torque settings

- ⇒ o2.1 verview - toothed belt", page 85
- Assembly overview - cylinder block (pulley end) ⇒ o1.2 verview - cylinder block (pulley end)", page 36 .

2.3 Preassembling and installing valve timing tool

⇒ v2.3.1 alve timing tool", page 108

⇒ t2.3.2 est toolVAS 611 007", page 111

⇒ i2.3.3 n test toolVAS 611 007 electronically and performing basic setting", page 114

2.3.1 Preassembling valve timing tool

Special tools and workshop equipment required

- Tester for checking elongation of chain links -VAS 611 007-

- Supplement set for MPI engines testing tool -VAS 611 007/18-

Test tool -VAS 611 007-:

A - Angle sensor -VAS 611 007/1-

B - Lock ring -VAS 611 007/2-

C - Clamping ring -VAS 611 007/3-

D - Adapter for camshaft housing -VAS 611 007/11- for 1.0 l engine MPI

E - Adapter for angle sensor -VAS 611 007/12- and adapter for angle sensor -VAS 611 007/13-

- ❑ Adapter for angle sensor -VAS 611 007/12- blue, for inlet camshaft
- ❑ Adapter for angle sensor -VAS 611 007/13- red, for exhaust camshaft

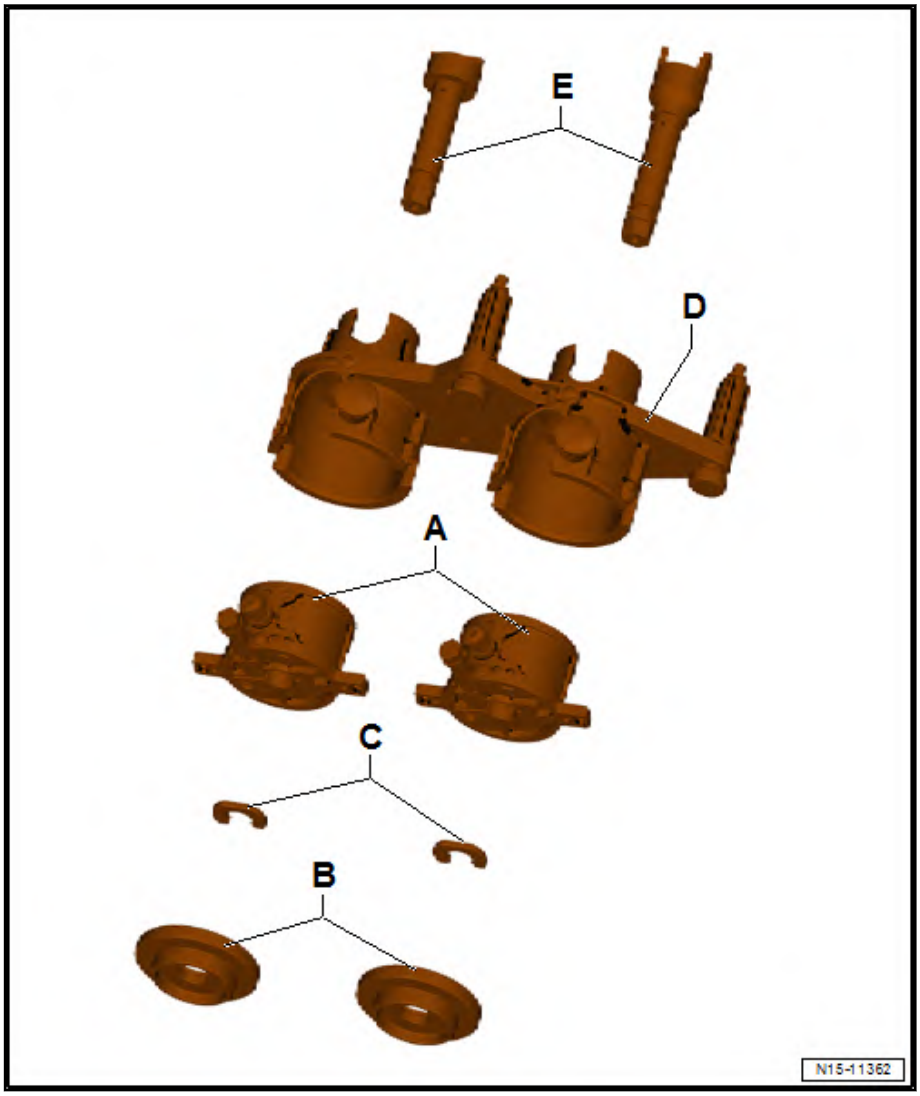

Preassembling test tool -VAS 611 007-:

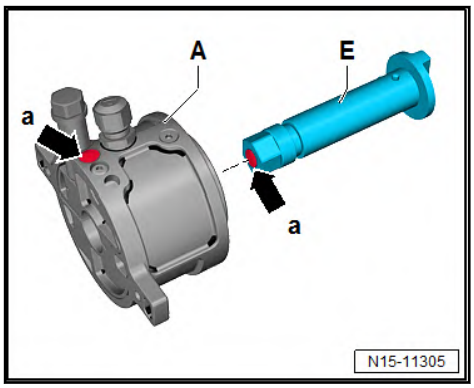

Note

The shape of the adapter for angle sensor -E- may differ depending on the engine.

– Before inserting adapter for angle sensor -VAS 611 007/12- and adapter for angle sensor -VAS 611 007/13- -E- in angle

sensors -VAS 611 007/1- -A-, verify correct allocation in accordance with colour coding -a-.

– Insert adapter for angle sensor -VAS 611 007/912- and adapter for angle sensor -VAS 611 007/13- -E- in angle sensors -VAS 611 007/1- -A-.

– Note position of dowel pins -a- when installing.

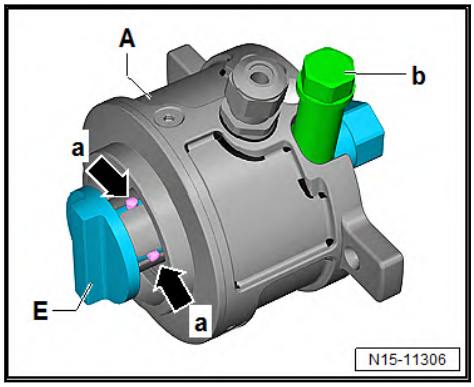

– The adapters for angle sensor -VAS 611 007/12- and -VAS 611 007/13- -E- can only be fitted in one position.

– Make sure that brake -b- is released. Do not apply force.

– Insert adapters for angle sensor -VAS 611 007/12- and -VAS 611 007/13- -E- to stop into angle sensor -VAS 611 007/1- -A-.

– Fit clamping ring -VAS 611 007/3- -C- in groove -a- of adapter for angle sensor -VAS 611 007/12- and -VAS 611 007/13- -E-, and clip it in until it can be heard to engage.

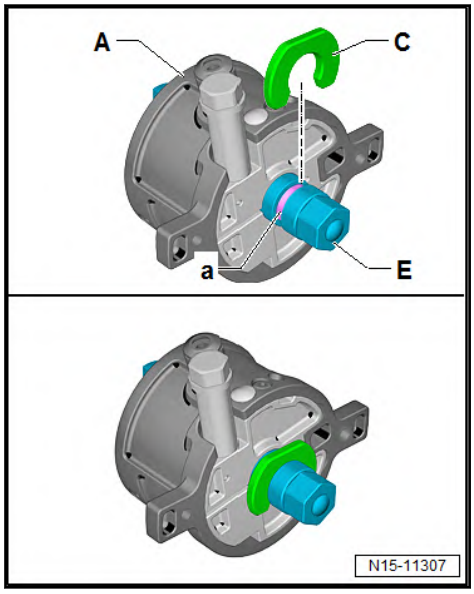

– Insert angle sensor -VAS 611 007/1- -A- with the red colour coding on the side marked in red -arrows a- of adapter for camshaft housing -VAS 611 007/11- -D-.

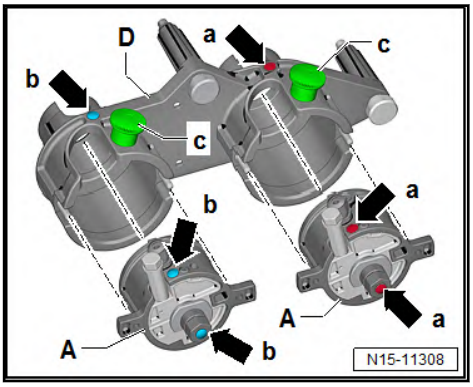

– To do this, release locking pins -c- by pulling them upwards.
– Insert angle sensor -VAS 611 007/1- -A-, and push it in until locking pin can be heard to engage.
– Repeat the procedure with the angle sensor -VAS 611 007/1- -A- with blue colour coding -arrows b-.
– Screw in securing rings -VAS 611 007/2- -B- approx. 2 turns.

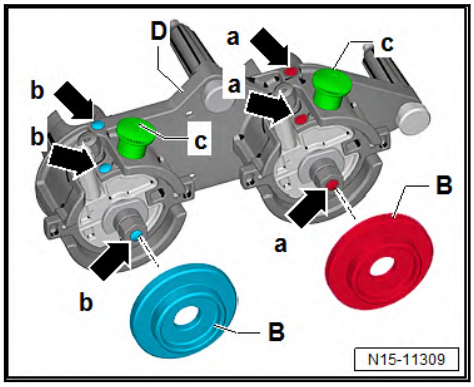

– Note colour coding -arrows a- and -arrows b- when doing this.
– Make sure that the shafts are free to move. It must be possible to turn adapter for angle sensor -VAS 611 007/12- and -VAS 611 007/13- -E-.

2.3.2 Installing test tool -VAS 611 007-

Special tools and workshop equipment required

♦ Tester for checking elongation of chain links -VAS 611 007-

♦ Supplement set for MPI engines testing tool -VAS 611 007/18-

Procedure

- Preassemble test tool -VAS 611 007- ⇒ page 109 .
- Teach in test tool -VAS 611 007- electronically, and perform basic setting ⇒ page 114 .
- Turn the two adapter for angle sensor -VAS 611 007/12- and -VAS 611 007/13- in such a way that the display shows approx. »0°«.
- Perform the preliminary work for checking the valve timing ⇒ v2.4 alve timing", page 116 .
- Make sure that the piston in cylinder no. 1 is at "TDC" position for repair work on toothed belt drive ⇒ p4.4 iston to TDC position", page 66 .

Note

Before positioning the test tool -VAS 611 007- against the camshaft housing, the grooves of the camshafts must be checked for damage.

- Align adapter for angle sensor -E- by hand with grooves of camshafts -arrows-.

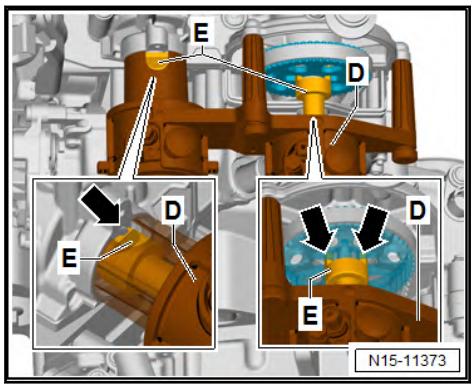

- Check proper alignment through recess, and adapt position by turning.
- Fit adapter for camshaft housing -VAS 611 007/11- -D- to camshaft housing, and slide it on.

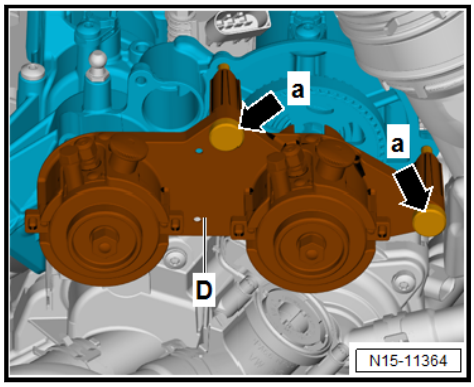

- Tighten knurled screws -arrows a- alternately by hand.
- Make sure that adapter for camshaft housing -VAS 611 007/11- -D- is properly seated.

Note

- *If camshaft housing adapter -VAS 611 007/11- -D- touches the housing of the coolant pump, the basic setting of the coolant pump is incorrect.*
- *In this case, correct adjustment or testing of the valve timing is not possible.*
- *The coolant pump must be removed and readjusted* ⇒ *a2.3 nd installing coolant pump ", page 212* .

- Test tool -VAS 611 007- must rest flush against camshaft housing.

– Make sure that brakes on angle sensor -VAS 611 007/1- are released on both sides ⇒ page 110 .

– Tighten locking ring -VAS 611 007/2- -B- on both sides evenly by hand. When doing this, ensure that camshaft housing adapter -VAS 611 007/11- -D- always lies flat against camshaft housing -1-.

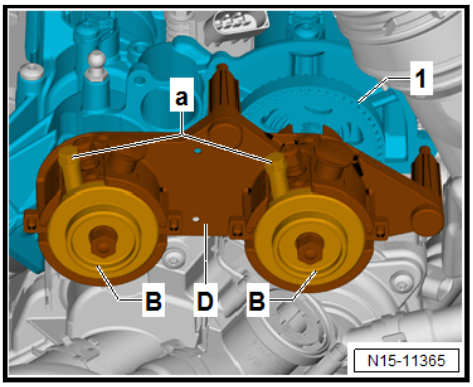

- Camshaft housing adapter -VAS 611 007/11- -D- should not lift off of camshaft housing -1-.

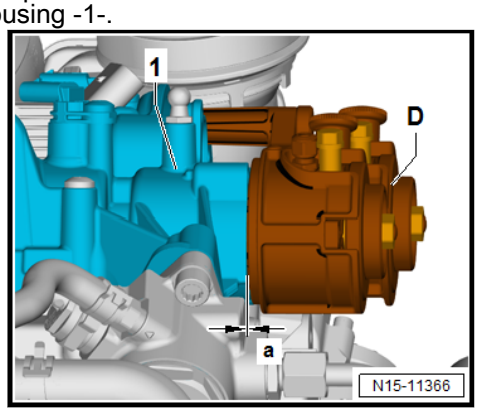

Note

- *The correct preload is achieved when the camshaft housing adapter -VAS 611 007/11- lies flat against the camshaft housing.*
- *If the locking ring -VAS 611 007/2- is tightened too much, the camshaft housing adapter -VAS 611 007/11- will lift off of the camshaft housing. This will falsify the result of the measurement.*

– Make sure that brakes -a- are released on both sides.

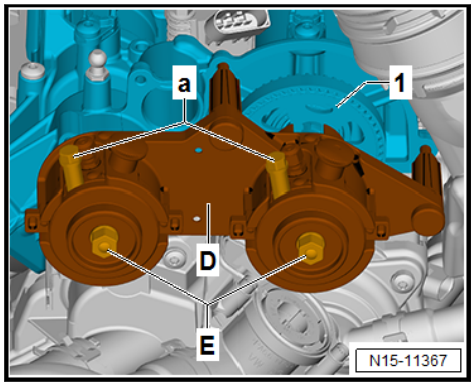

2.3.3 Teaching in test tool -VAS 611 007- electronically and performing basic setting

Special tools and workshop equipment required

- Tester for checking elongation of chain links -VAS 611 007-

- Supplement set for MPI engines testing tool -VAS 611 007/18-

– Connect electronic measuring equipment of test tool -VAS 611 007- ⇒ Operating manual.

– Perform software installation of test tool -VAS 611 007- ⇒ Operating manual.

– Start test program ⇒ Operating manual.

– If the angle sensors are not connected, the message shown in the illustration is displayed.

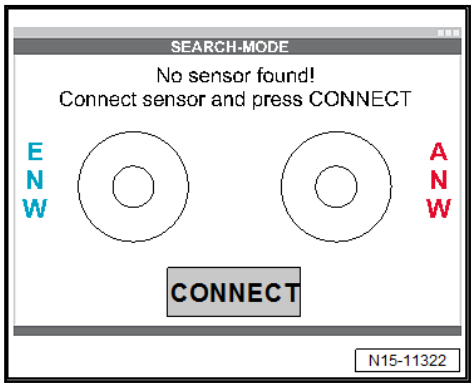

– Connect test tool -VAS 611 007-, and press CONNECT.

– If the test tool -VAS 611 007- is connected, the display is as shown in the illustration.

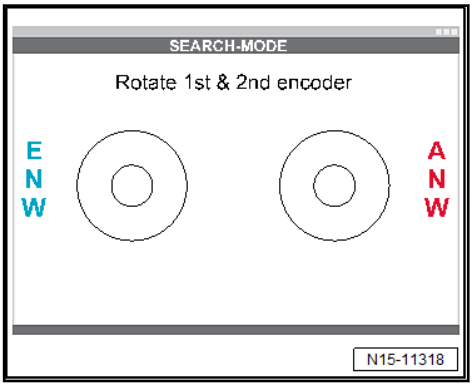

ANW - Exhaust camshaft, red

ENW - Inlet camshaft, blue

– Turn adapter for angle sensor -VAS 611 007/13- -E- of exhaust camshaft.

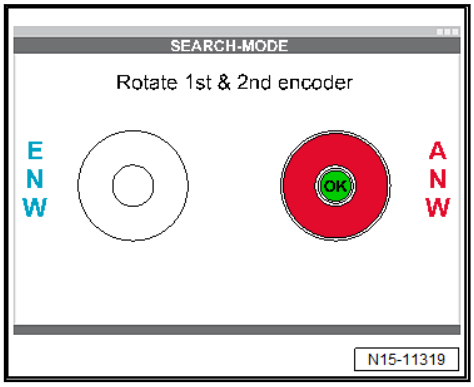

– If »OK« is displayed, the exhaust camshaft has been taught-in.

– Turn adapter for angle sensor -VAS 611 007/12- -E- of inlet camshaft.

– If the display is as shown in the illustration, the exhaust camshaft has been taught-in.

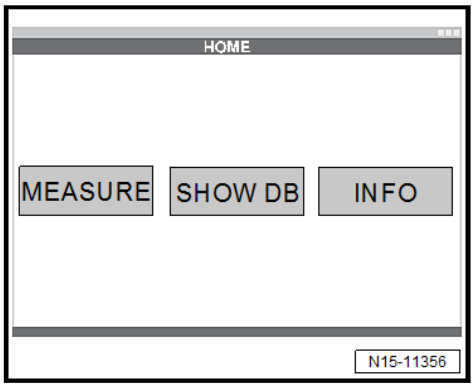

– Select function MEASURE.

– When the angle display appears, the valve timing can be checked or adjusted ⇒ v2.4 alve timing", page 116 .

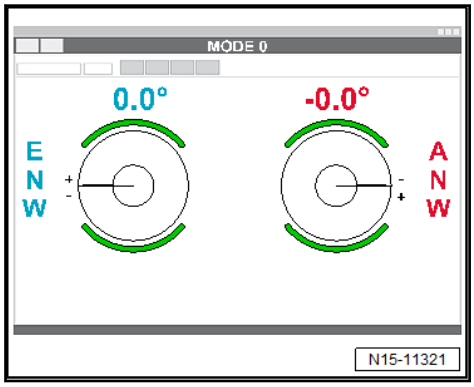

– Make sure that the brake indicator on the display is »green«.

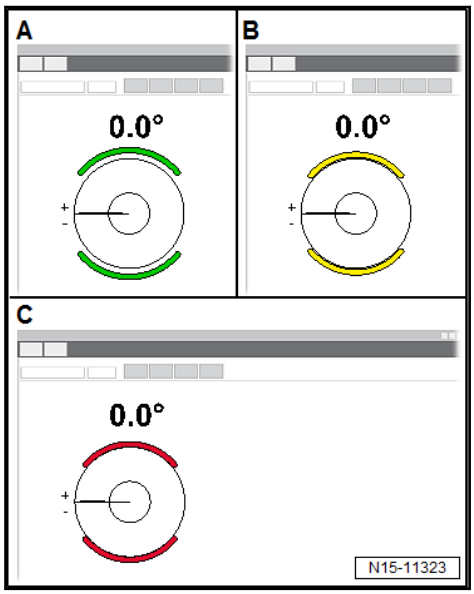

– Display must not be »yellow« or »red«.

A - »Green«, brake is released

B - »Yellow«, brake is applied

C - »Red«, brake has been tightened to final torque

2.4 Checking valve timing

Special tools and workshop equipment required

♦ Tester for checking elongation of chain links -VAS 611 007-

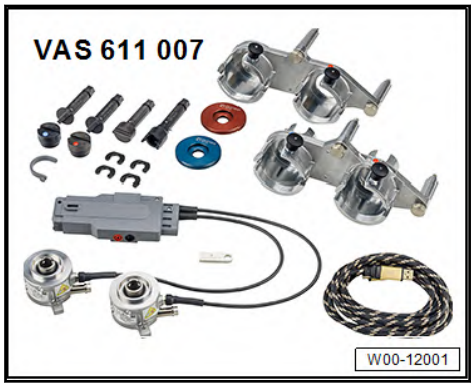

♦ Supplement set for MPI engines testing tool -VAS 611 007/18-

- Locating bolt -T10340-

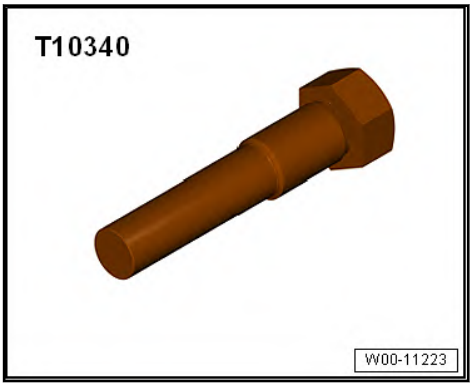

- Engine bung set -VAS 6122-

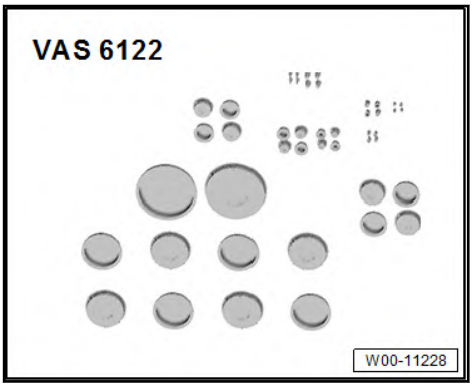

Preliminary work for the procedure:

– Remove air filter housing ⇒ a3.2 nd installing air filter housing", page 260 .

– Remove upper part of toothed belt guard ⇒ o1.2 verview - cylinder block (pulley end)", page 36 .

– Remove vacuum line -1- from intake manifold -2-.

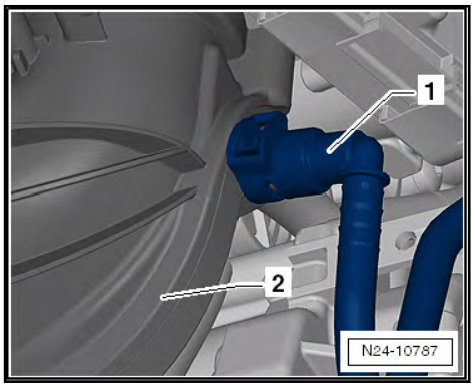

– Lay vacuum line to one side.

– Loosen clamp -4- and disconnect hose -3-.

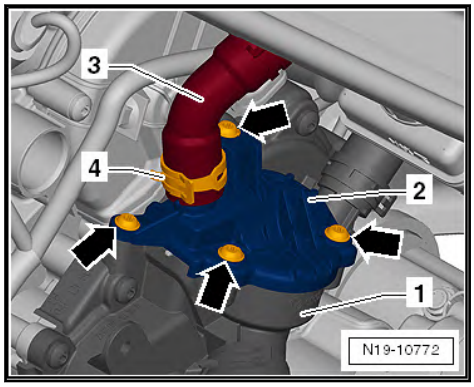

– Unscrew bolts -arrows-.
– Remove cover -2-.
– Set piston in cylinder no. 1 to “TDC” position for repair work on toothed belt drive ⇒ p4.4 iston to TDC position”, page 66 .
– Preassemble test tool -VAS 611 007- ⇒ v2.3.1 alve timing tool”, page 108 .
– Install test tool -VAS 611 007- ⇒ page 111 .

Checking valve timing:

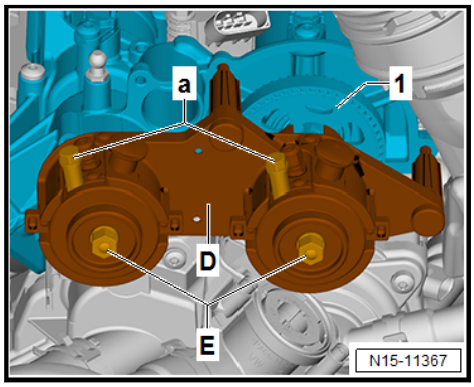

– Make sure that brakes -a- on test tool -VAS 611 007- are released on both sides.
– Make sure that the brake indicator on the display is »green« -A-.

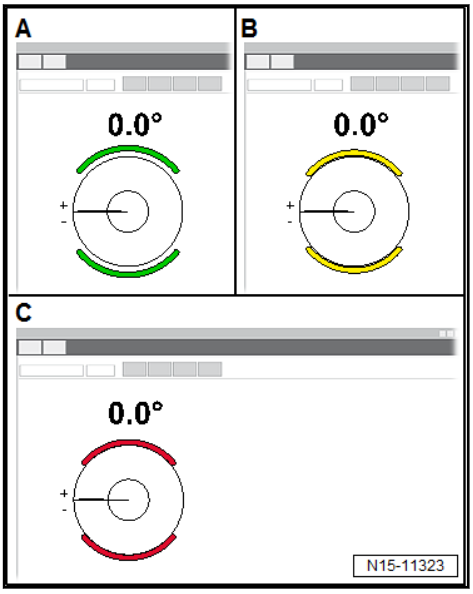

– Display must not be »yellow« or »red«.
– Unscrew locking pin -T10340-.

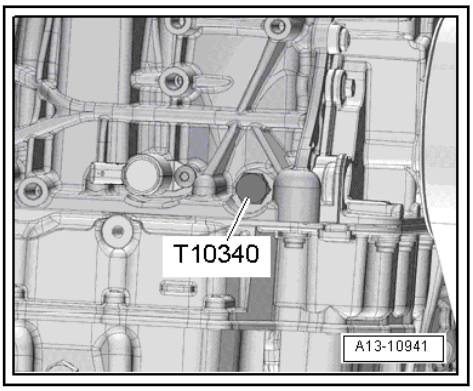

– Turn crankshaft 2 turns in direction of rotation of engine.
– Screw in locking pin -T10340-.
– Set piston for cylinder no. 1 to »TDC« position ⇒ p4.4 iston to TDC position", page 66 .
– Read valve timing angles on display, and compare values with specifications.

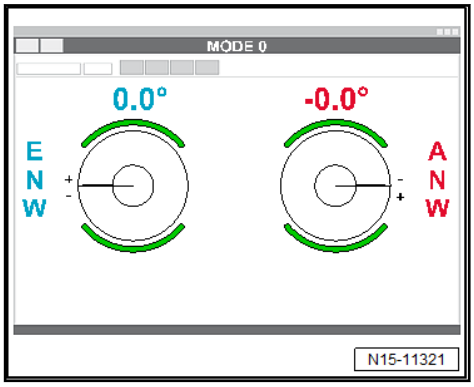

Specified angle in °	Inlet camshaft	Exhaust camshaft
	0.0°±1.5°	-0.5°±1.5°

NOTICE

Adjust valve timing as precisely as possible. The settings must be as close to the specifications as possible.

The valve timing must not be outside the tolerance limits.

– If the valve timing is not OK, adjust valve timing ⇒ v2.5 alve timing", page 120 .

Assemble in reverse order of dismantling. The following should be observed:

– Add coolant ⇒ a1.3 nd adding coolant", page 198 .

– Install upper toothed belt guard ⇒ o1.2 verview - cylinder block (pulley end)", page 36 .

– Install air filter housing ⇒ a3.2 nd installing air filter housing", page 260 .

Note

Renew bolts that are tightened with turning further angle.

– Renew O-rings, seals and gaskets after each removal.

Torque settings

- ⇒ o2.1 verview - toothed belt", page 85
- ⇒ Fig. ""Plug for TDC drilling in cylinder block - specified torque"", page 87
- ⇒ o1.1 verview - cylinder head", page 69
- ⇒ o2.2 verview - thermostat", page 209

2.5 Adjusting valve timing

Special tools and workshop equipment required

- Tester for checking elongation of chain links -VAS 611 007-

- Supplement set for MPI engines testing tool -VAS 611 007/18-

- Locating bolt -T10340-

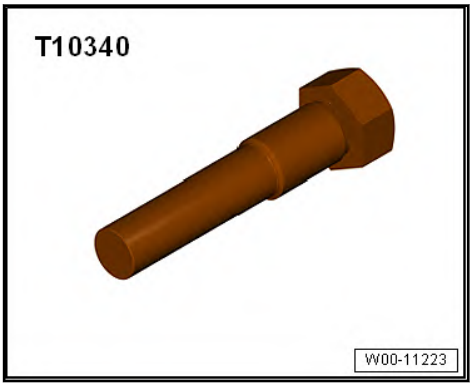

- Engine bung set -VAS 6122-

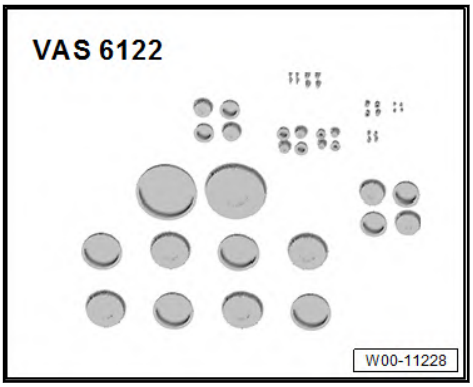

Procedure

- Toothed belt installed ⇒ a2.2 nd installing toothed belt", page 87 .

– Check valve timing ⇒ v2.4 alve timing", page 116 .

– Do not relieve tension from toothed belt, and do not remove toothed belt from camshafts when adjusting valve timing. Only loosen camshaft adjuster.

– Loosen camshaft adjuster on inlet side ⇒ a3.3 nd installing camshaft adjuster", page 140 .

– Loosen toothed belt sprocket on exhaust side ⇒ a3.4 nd installing toothed belt pulley", page 146 .

NOTICE

Risk of damage to engine caused by incorrect valve timing.

– **Do not turn crankshaft out of TDC position.**

Note

- *Place a cloth under the camshaft adjusters and over tensioning roller to catch the engine oil which runs out.*
- *The contact points between the toothed belt and components - such as camshaft pulleys, tensioning roller and idler pulley - must be kept free of oil.*
- *Catch any engine oil which runs out immediately, and remove it.*
- *Remove any engine oil which ran out from camshaft adjusters after the engine has been cranked.*

– Place a cloth under the camshaft adjusters and over tensioning roller to catch the engine oil which runs out.

– Make sure that the piston in cylinder no. 1 is at “TDC” position for repair work on toothed belt drive ⇒ p4.4 iston to TDC position”, page 66 .

– Renew bolts -1- and -2- and screw in loosely ⇒ a3.3 nd installing camshaft adjuster”, page 140 .

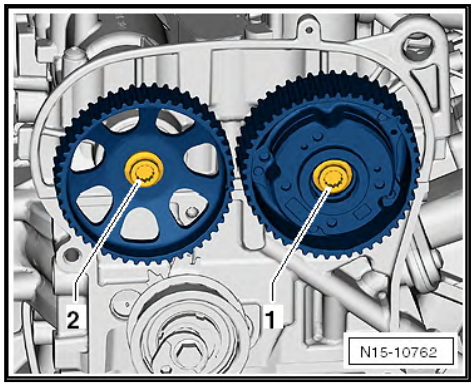

– It should still be possible to turn the camshaft adjuster and toothed belt sprocket on the camshafts.

Setting camshafts to »0°«:

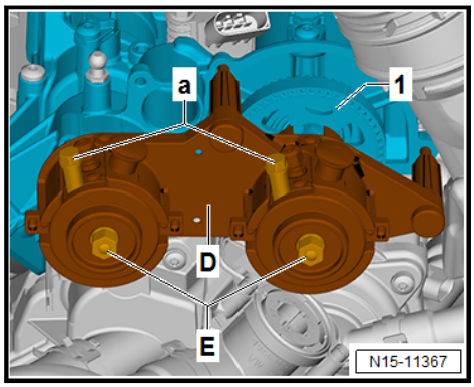

– Make sure that bolts -a- for brakes on test tool -VAS 611 007- are released on both sides.

– Make sure that the brake indicator on the display is »green« -A-.

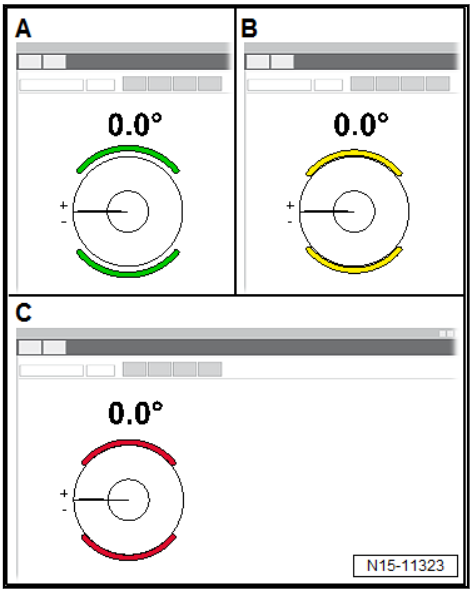

– Display must not be »yellow« or »red«.
– Set both camshafts to »0.0°«.

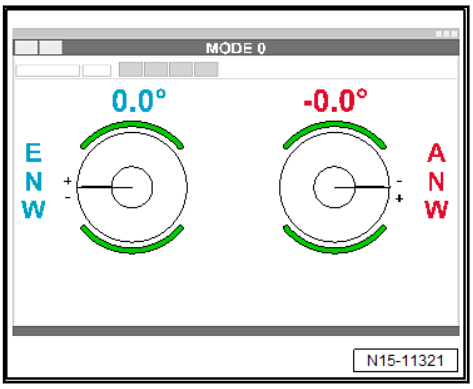

– To do this, turn camshafts with adapter for angle sensor -VAS 611 007/12- and -VAS 611 007/13- -E-.

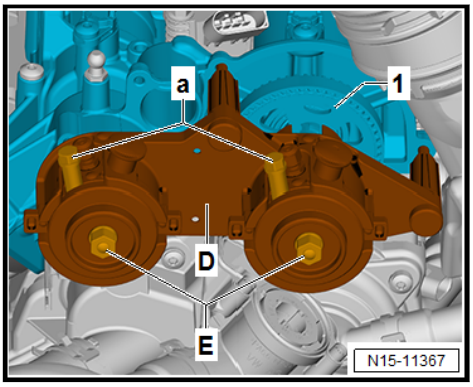

– Hold camshafts in »0.0°« position using adapters for angle sensor -VAS 611 007/12- and -VAS 611 007/13- -E- and a hexagon key.

Note

- *The camshafts tend to turn.*
- *Use a hexagon key to hold the camshafts in »0.0°« position.*
- *Always remove the hexagon key after the camshafts have been tightened.*

– Tighten brakes after adjustment has been completed.

– Tighten bolts -a- for brakes on test tool -VAS 611 007- to 11 Nm on both sides.

– Make sure that the brake indicator on the display is »red« -C-.

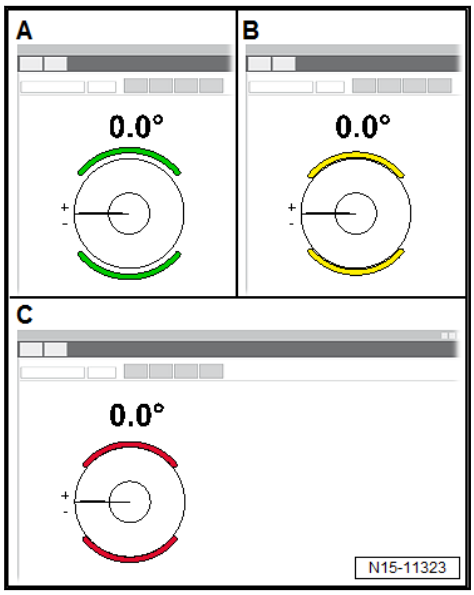

– Display must not be »yellow« or »green«.

– Unscrew locking pin -T10340-.

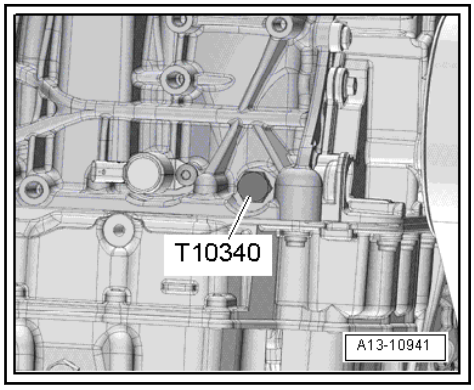

– Tighten camshaft adjuster on inlet camshaft to specified initial torque ⇒ page 143 .

– Tighten toothed belt sprocket of exhaust camshaft to specified initial torque ⇒ page 143 .

– Make sure that brakes -a- on test tool -VAS 611 007- are released on both sides.

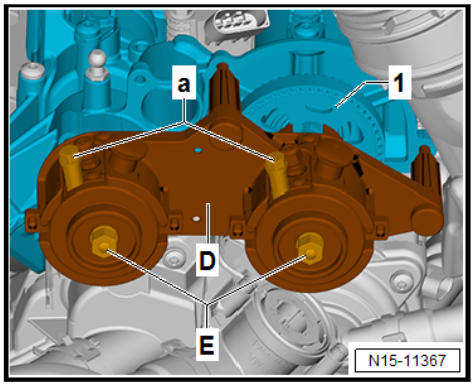

– Make sure that the brake indicator on the display is »green« -A-.

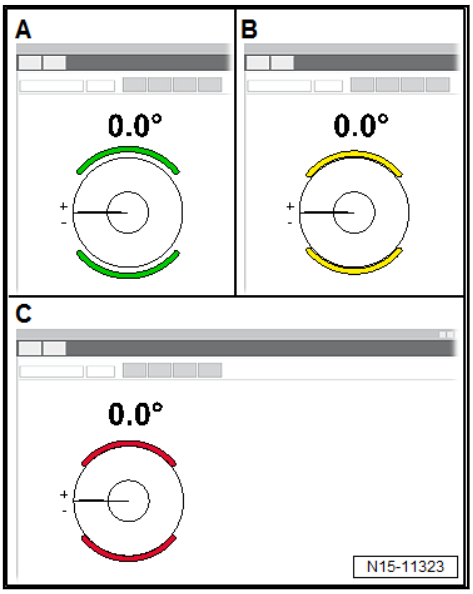

– Display must not be »yellow« or »red«.

– Seal camshaft adjusters -2-, as shown, using suitable plugs -A- from engine bung set -VAS 6122-.

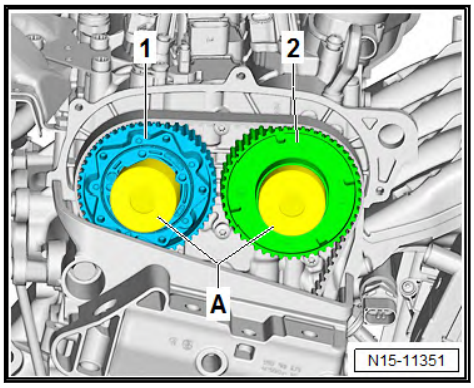

– Fit a piece of paper into plugs to catch the engine oil.

– Insert plugs into camshaft adjusters with the open side facing towards front, as shown in illustration.

– Turn crankshaft 2 turns in direction of rotation of engine.

Determining correction angle:

– Screw in locking pin -T10340-.

– Set piston for cylinder no. 1 to »TDC« position ⇒ p4.4 iston to TDC position", page 66 .

– Read valve timing on display and write down values. The illustration shows values as an example.

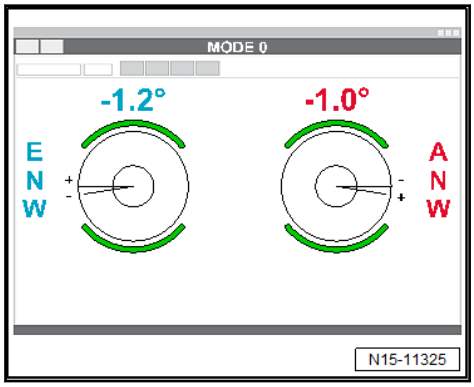

Note

- *The correction angle is determined for each individual vehicle.*
- *The value read after the engine has been cranked is used for determining the correction angle.*
- *Note the algebraic signs of the values.*
- *The correction angle results from the difference between the specification and the value which has been read after the crankshaft has been cranked twice.*
- *The correction angle is used to adjust the valve timing.*
- *The difference between the actual value (read after 2 full revolutions of the engine) and the specification (see table) is calculated.*
- *The result is the correction angle to be set, with the corresponding algebraic sign/direction of rotation.*

Example:

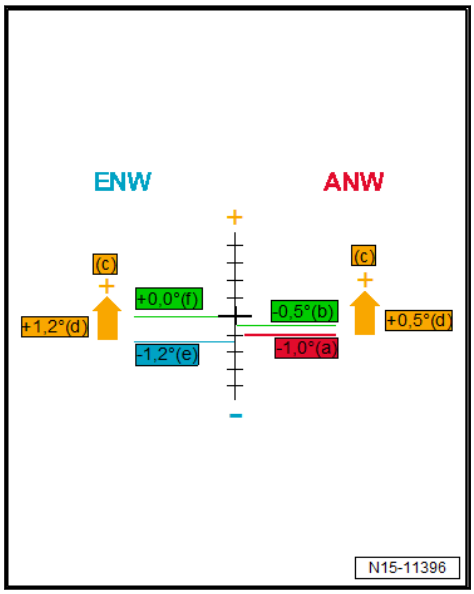

Index	Explanation
e	Inlet camshaft - actual value (after 2 full revolutions of the engine)
f	Inlet camshaft - specification (+/- tolerance)
c	Direction of correction (+/-)
d	Correction value - correction angle
a	Exhaust camshaft - actual value (after 2 full revolutions of the engine)
b	Exhaust camshaft - specification (+/- tolerance)

Angle in °	Inlet camshaft	Exhaust camshaft
Specified value	0.0°±1.5°	-0.5°±1.5°

– Set determined correction angle for camshafts.

Setting valve timing with correction angle:

– Place a cloth underneath camshaft adjuster to catch any engine oil which runs out.

– Remove plugs taken from engine bung set -VAS 6122- from camshaft adjuster.

– Remove paper from plugs and camshaft adjusters.

– Clean camshaft adjusters with a cleaning cloth, and remove as much engine oil as possible.

– Loosen camshaft adjuster on inlet side ⇒ a3.3 nd installing camshaft adjuster", page 140 .

– Loosen toothed belt sprocket on exhaust side ⇒ a3.4 nd installing toothed belt pulley", page 146 .

NOTICE

Risk of damage to engine caused by incorrect valve timing.

– **Do not turn crankshaft out of TDC position.**

– Make sure that the piston in cylinder no. 1 is at "TDC" position for repair work on toothed belt drive ⇒ p4.4 iston to TDC position", page 66 .

– Make sure that bolts -a- for brakes on test tool -VAS 611 007- are released on both sides.

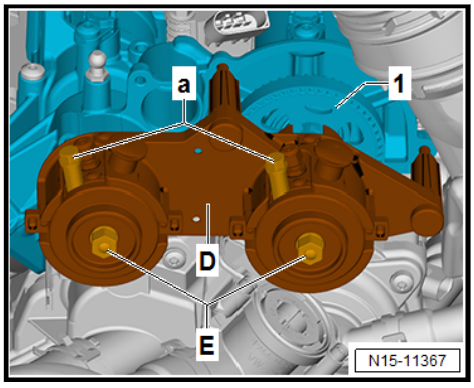

– Make sure that the brake indicator on the display is »green« -A-.

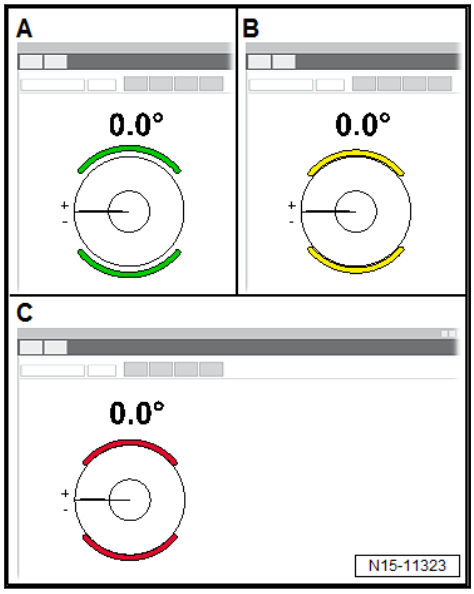

– Display must not be »yellow« or »red«.
– Set the two camshafts to the determined correction angle ⇒ page 125 .
– To do this, turn camshafts with adapter for angle sensor -VAS 611 007/12- and -VAS 611 007/13- -E-.

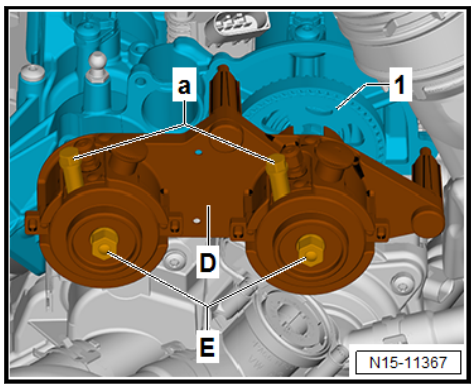

If the valve timing has been set:

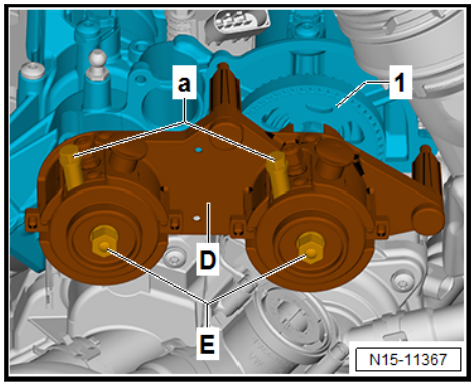

– Tighten bolts -a- for brakes on test tool -VAS 611 007- to 11 Nm on both sides.
– Make sure that the brake indicator on the display is »red« -C-.

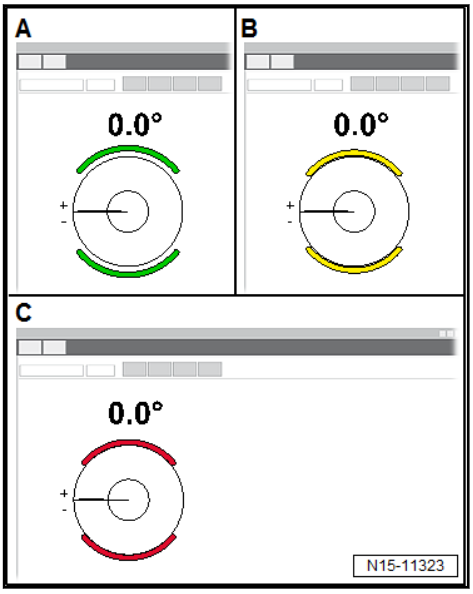

– Display must not be »yellow« or »green«.
– Unscrew locking pin -T10340-.

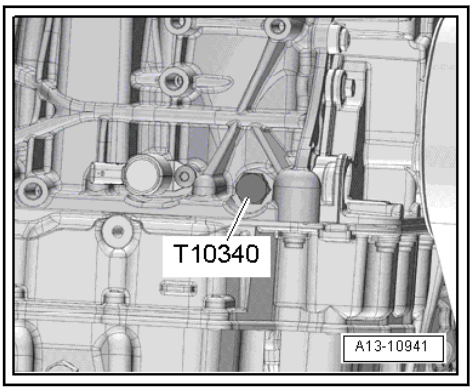

– Tighten camshaft adjuster on inlet camshaft to specified initial torque ⇒ page 143 .
– Tighten toothed belt sprocket of exhaust camshaft to specified initial torque ⇒ page 143 .
– Release brakes -a- on test tool -VAS 611 007- on both sides.

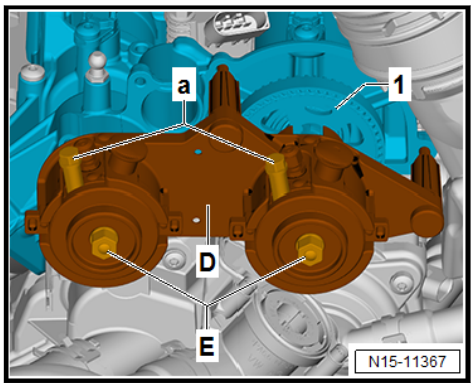

– Make sure that the brake indicator on the display is »green« -A-.

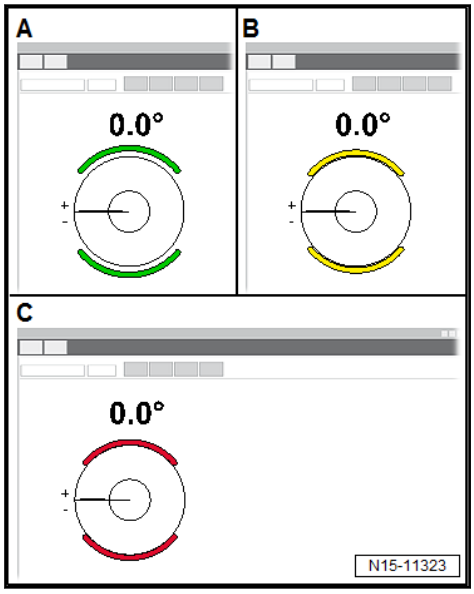

– Display must not be »yellow« or »red«.
– Seal camshaft adjusters -2- again, as shown, using suitable plugs -A- from engine bung set -VAS 6122-.

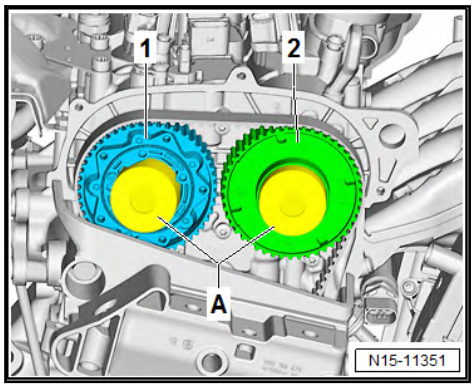

– Fit a new piece of paper into plugs -A- to catch the engine oil.
– Turn crankshaft 2 turns in direction of rotation of engine.
– Screw in locking pin -T10340-.
– Set piston for cylinder no. 1 to »TDC« position ⇒ p4.4 iston to TDC position", page 66 .
– Check valve timing ⇒ v2.4 alve timing", page 116 .

NOTICE

Adjust valve timing as precisely as possible. The settings must be as close to the specifications as possible.

The valve timing must not be outside the tolerance limits.

– Read valve timing, and compare it with specifications.

Specified angle in °	Inlet camshaft	Exhaust camshaft
	0.0°±1.5°	-0.5°±1.5°

– If the valve timing is not OK, adjust valve timing again ⇒ v2.5 alve timing", page 120 .

Assembly is carried out in reverse sequence; note the following:

– Unscrew locking pin -T10340-.

– Make sure that brakes on test tool -VAS 611 007- are released on both sides.

– Tighten camshaft adjuster on inlet camshaft to specified final torque ⇒ page 144 .

– Tighten toothed belt sprocket of exhaust camshaft to specified final torque ⇒ page 144 .

Torque settings

- ⇒ o2.1 verview - toothed belt", page 85
- ⇒ Fig. ""Plug for TDC drilling in cylinder block - specified torque"", page 87
- ⇒ o1.1 verview - cylinder head", page 69
- ⇒ o2.1 verview - crankcase breather system", page 184
- ⇒ o2.2 verview - thermostat", page 209

2.6 Removing toothed belt from camshaft

Special tools and workshop equipment required

- Counterhold -T10172A- with adapter -T10172/1- and -T10172/2-

- Locating bolt -T10340-

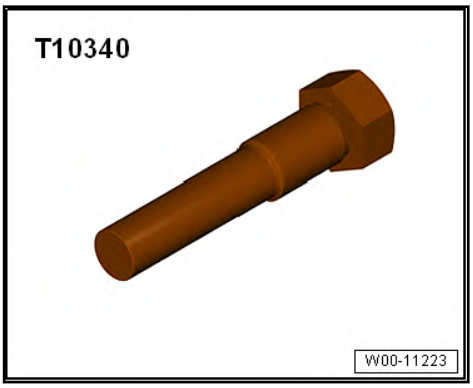

- Counterhold tool -T10475-

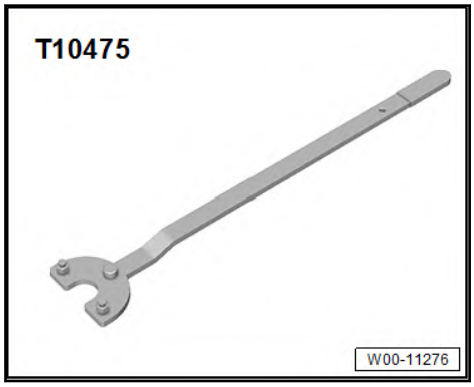

- Special wrench, 30 mm -T10499A-

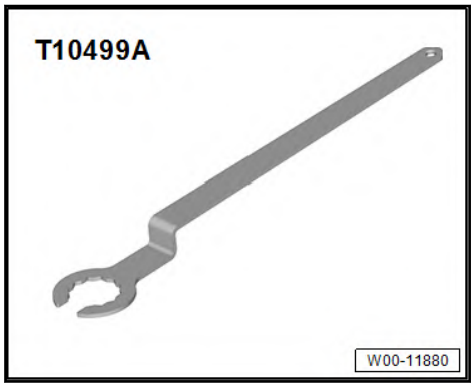

- Insert tool -T10500-

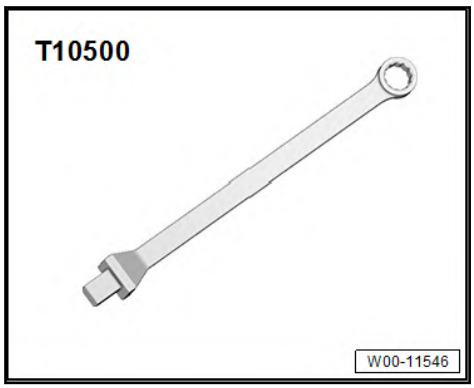

- Assembly tool -T10487-

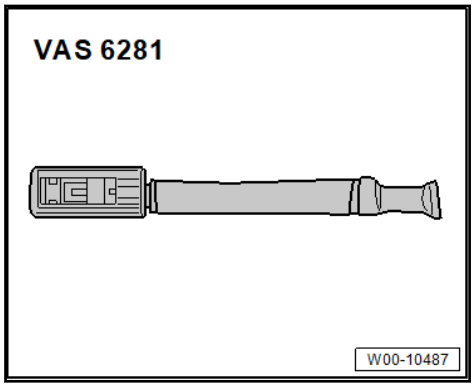

Procedure

– Set piston in cylinder no. 1 to TDC position. ⇒ p4.4 iston to TDC position", page 66

– Remove upper part of toothed belt guard ⇒ o1.2 verview - cylinder block (pulley end)", page 36 .

– Loosen securing bolt for camshaft adjuster on inlet side ⇒ a3.3 nd installing camshaft adjuster", page 140 .

– Loosen securing bolt of toothed belt pulley on exhaust side ⇒ a3.4 nd installing toothed belt pulley", page 146 .

– Loosen bolt -1- with tool insert -T10500-.

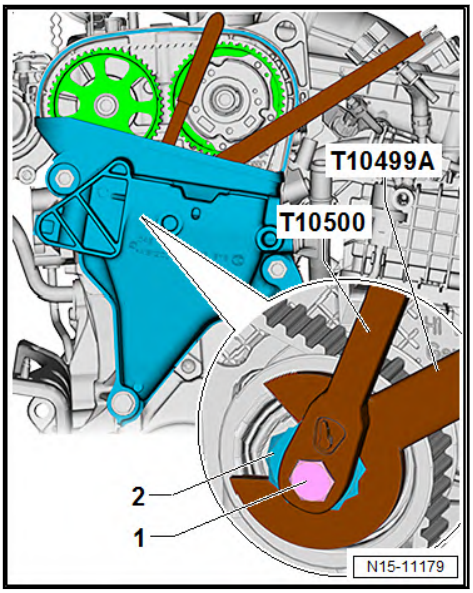

– Release tension on tensioning roller at eccentric -2- using wrench -T10499-.

– Remove toothed belt from camshaft pulleys.

Installing

Note

- *The camshaft pulleys are not circular.*
- *If one or both camshaft pulleys have been loosened, they must be properly aligned with each other.*
- *It should just be possible to turn camshaft pulleys on camshafts but no rocking is permissible.*
- *The toothed belt has not yet been fitted.*

Align marked gap -1- in teeth of camshaft adjuster -3- with lug -2- of camshaft housing.

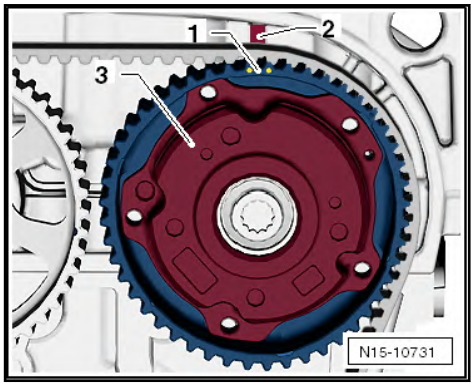

Align marked tooth -1- of exhaust camshaft pulley -3- with lug -2- of camshaft housing.

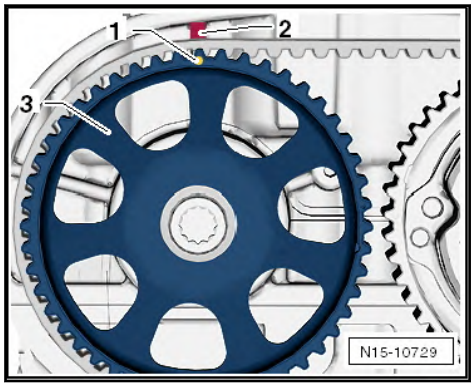

– Markings -1- and -2- on camshaft pulleys are aligned as shown.

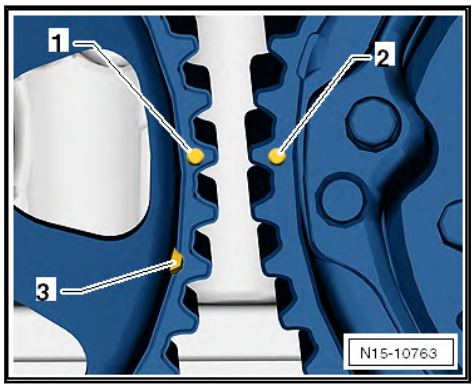

Groove -3- for assembly tool -T10476A- is located on exhaust camshaft pulley.

– Insert assembly tool -T10476A- between camshaft pulleys.

– Arrows -1- on assembly tool are aligned with marks -2- on camshaft pulleys.

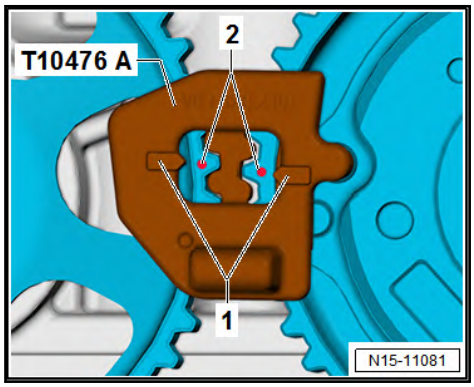

Note

When the assembly tool -T10476A- is inserted, the marks -2- on the camshaft pulleys are slightly offset.

– Dowel pin -1- of assembly tool -T10476A- must engage in groove -2- of exhaust camshaft pulley.

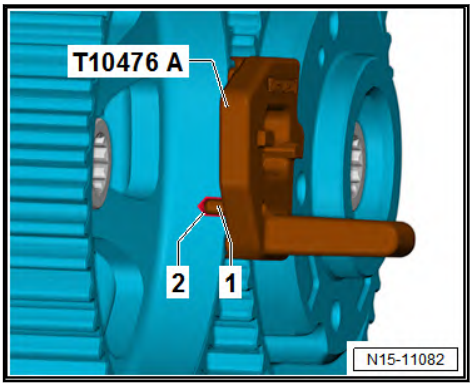

– Hand-tighten belt tensioner on cylinder head.

The sheet-metal tab -arrow- of the tensioning roller must engage in the cast notch in the cylinder head.

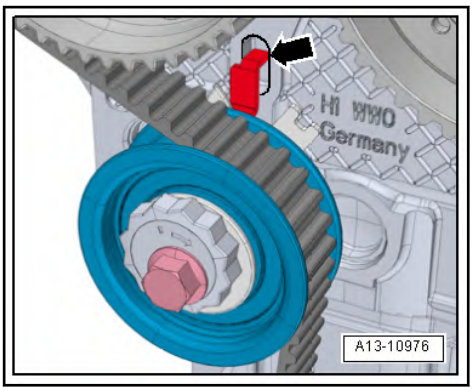

Note

When installing the toothed belt, ensure that the assembly tool -T10476A- is correctly positioned between the camshaft pulleys.

– Toothed belt must make full contact with crankshaft pulley.

– Check that crankshaft is set to TDC for No. 1 cylinder.

The crankshaft must make contact with the locking pin -T10340- in direction of engine rotation.

– Fit toothed belt -1- onto belt tensioner -5- and camshaft pulley -2-.

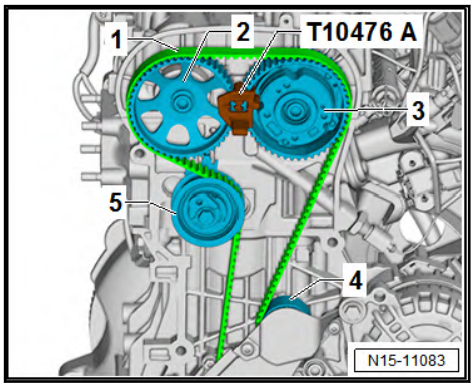

– Fit toothed belt on camshaft adjuster -3-, then push onto idler or guide pulley -4-.

– Remove assembly tool -T10476A- from camshaft pulleys.

– Rotate eccentric -2- of belt tensioner using tensioning spanner -T10499A- in -direction of arrow- until adjustment pointer -3- is located approx. 10 mm to the right from adjustment window.

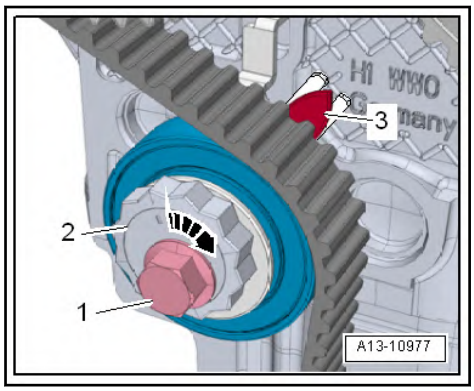

– Then rotate eccentric of belt tensioner back on 12-point surface -2- until adjustment pointer -3- is exactly centred in adjustment window.

– Hold eccentric on 12-point surface -2- in this position.

Note

When setting the specified torque on the torque wrench -VAS 6583-, the length indicated on insert tool, 13 mm -T10500- must be entered in the torque wrench.

– Tighten securing bolt -1- to 25 Nm.

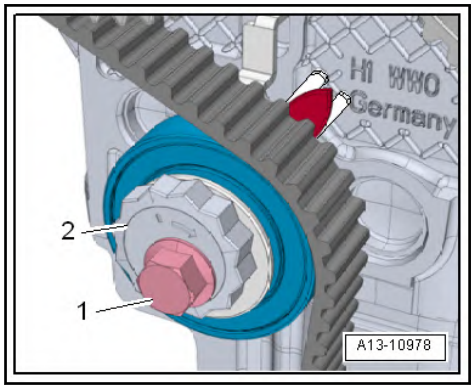

Note

- *When the engine has been rotated by hand or by engine operation, the position of the adjustment pointer might be slightly offset from the adjustment window.*
- *However, this has no relevant influence on the valve timing. The toothed belt does not need to be retensioned.*

– Tighten camshaft adjuster and toothed belt pulley in 2 stages.

– Use counter-hold tool -T10554/1- and counter-hold tool -T10172- to hold camshaft in position (apply force »anti-clockwise«).

– Tighten bolt -1- to initial specified torque ⇒ page 143 .

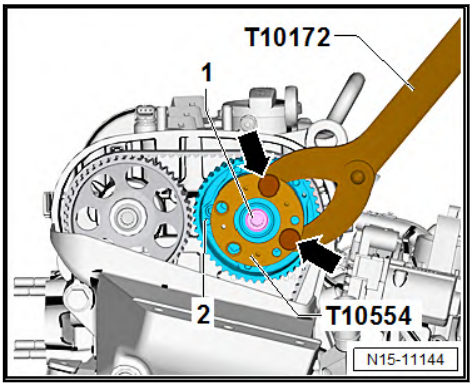

– Tighten bolt -1- to initial specified torque ⇒ page 143 using counter-hold tool -T10172- with adapters -T10172/2- and -T10172/1-.

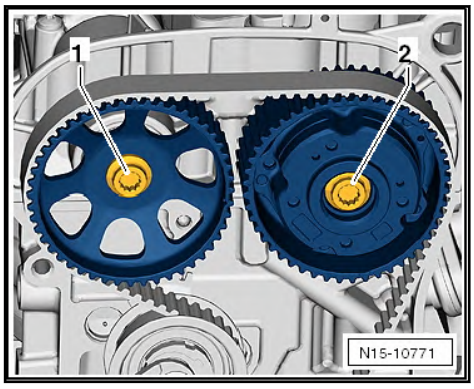

Note

The securing bolts will be tightened further at the end of the work sequence after the valve timing has been checked.

– Adjust valve timing ⇒ v2.5 alve timing", page 120 .

Note

After completing work, make sure that the locking pin -T10340- has been removed.

Continue installation in reverse order of removal.

Torque settings

- ⇒ o1.2 verview - cylinder block (pulley end)", page 36
- ⇒ o2.1 verview - toothed belt", page 85
- ⇒ Fig. ""Plug for TDC drilling in cylinder block - specified torque"", page 87
- ⇒ o2.2 verview - thermostat", page 209
- ⇒ o1.1 verview - poly V-belt drive", page 36
- ⇒ General body repairs, exterior; Rep. gr. 66; Noise insulation; Assembly overview - noise insulation

3 Valve gear

3.1 Assembly overview - valve gear

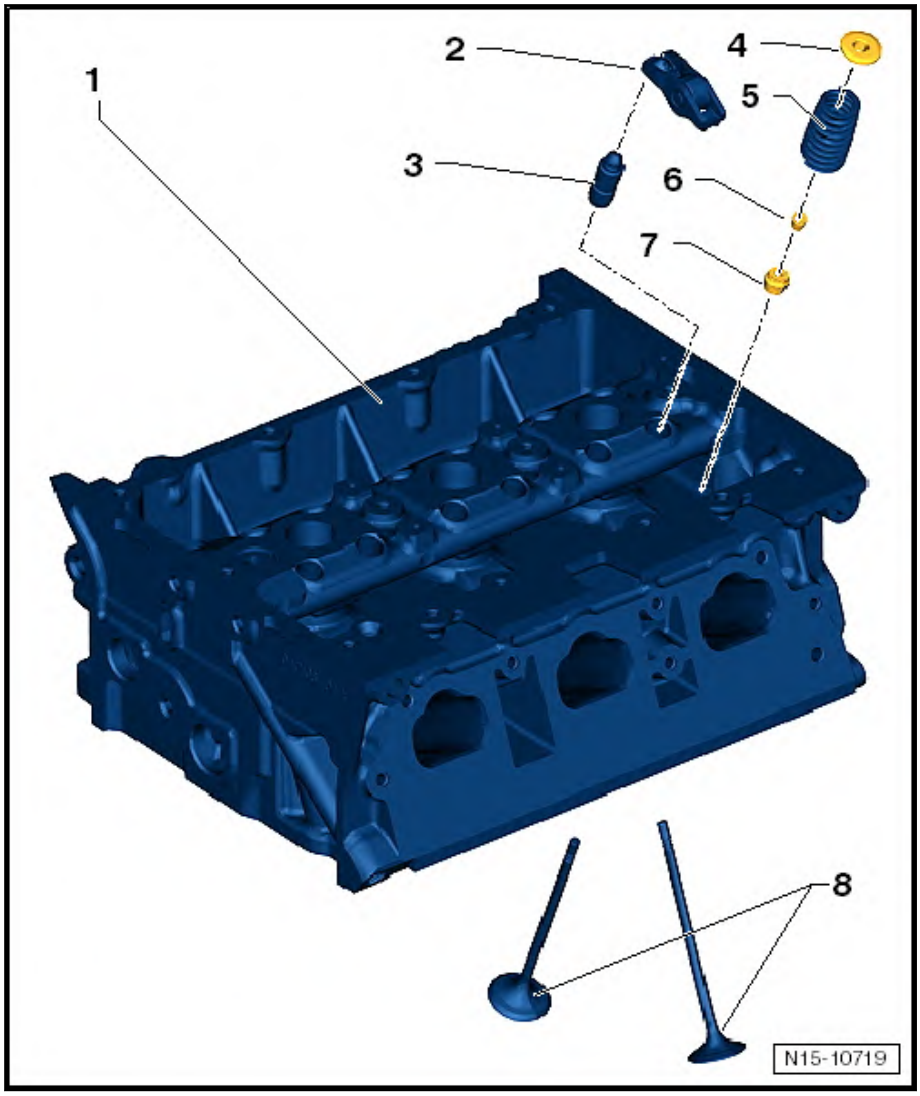

1 - Cylinder head

- ❑ Removing and installing ⇒ a1.2 nd installing cylinder head", page 72
- ❑ Machining the cylinder head sealing surface on the cylinder block ⇒ a3.2 xial play of camshaft", page 139

2 - Roller rocker fingers

- ❑ Check roller bearing for ease of movement.
- ❑ Before assembly, lightly oil contact surfaces to valves and rollers.
- ❑ When installing, secure to supporting element using securing clip.

3 - Support element

- ❑ Do not interchange
- ❑ With hydraulic valve clearance compensation.
- ❑ Oil contact surface

4 - Valve spring plate

5 - Valve springs

- ❑ Removing and installing ⇒ a3.6 nd installing valve stem seals", page 160

6 - Cotters

7 - Valve stem seal

- ❑ Renewing ⇒ a3.6 nd installing valve stem seals", page 160

8 - Valves

- ❑ Do not rework
- ❑ Lapping in valve seats is permitted
- ❑ Before assembly, lightly oil valve stems and ends of valves

3.2 Measuring axial play of camshaft

Special tools and workshop equipment required

- Universal dial gauge holder -VW 387-
- Dial gauge

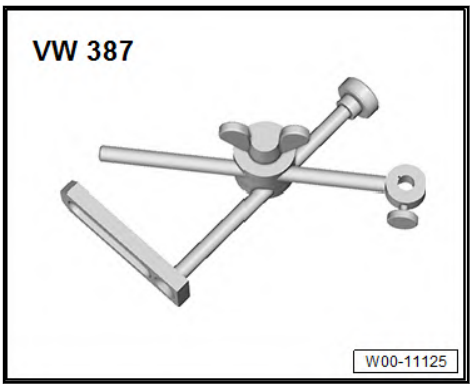

Checking camshaft axial clearance

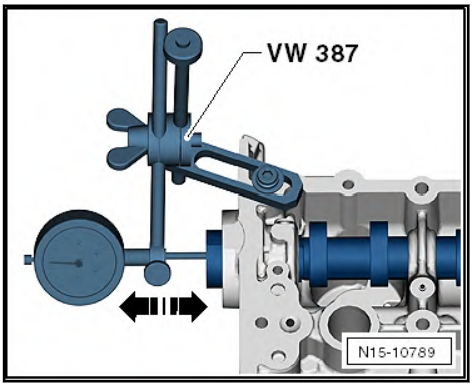

Take measurements with camshaft housing removed.

– Apply thumb pressure to one of the middle cams of the camshaft and move camshaft back and forth to check axial play.

Wear limit: max. 0.25 mm

Machining cylinder head sealing surface on cylinder block

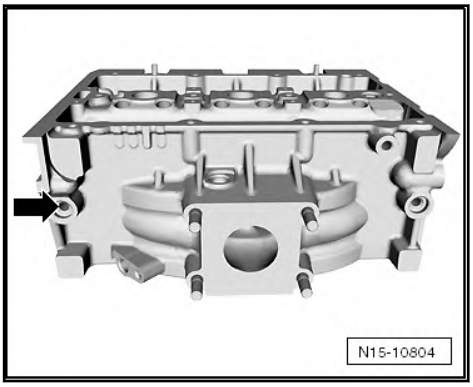

- The dimension reference point is the centre of hole -arrow-.

Measure

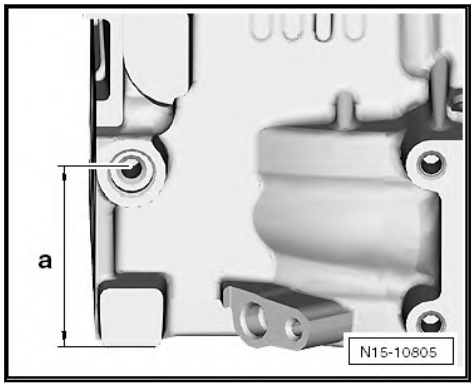

Reworking dimension of cylinder head: a (centre of hole 14H7 to combustion chamber surface of cylinder head) = 58 mm ± 0.1 mm.

Note

If the dimension is less than -a-, machining the cylinder head is not permitted!

3.3 Removing and installing camshaft adjuster

Camshaft adjuster for inlet camshaft

Special tools and workshop equipment required

- Torque wrench -VAS 6583-

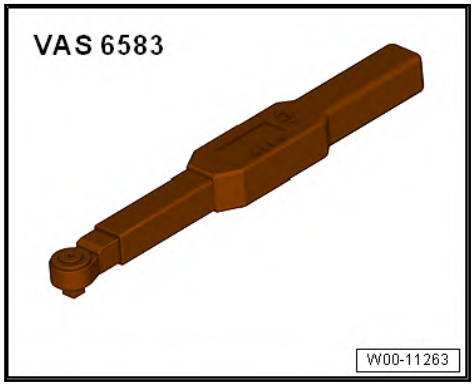

- Counterhold tool -T10554/1-

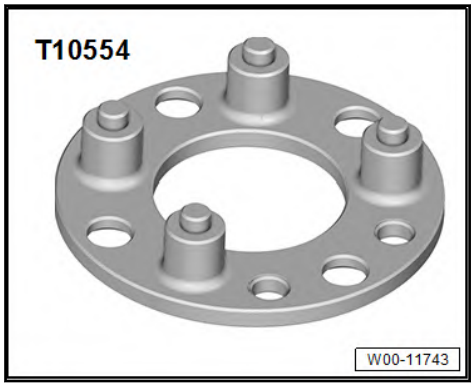

- Knurled screws -T10554/2- (not illustrated)

- Counterhold tool -T10172A-

Preparing tool

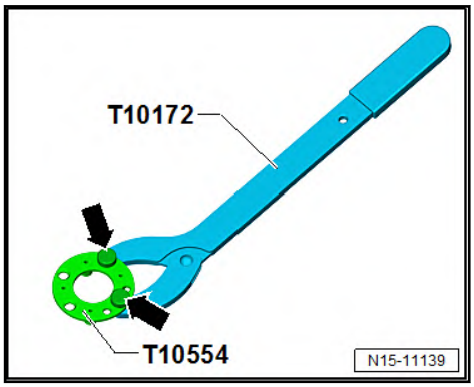

– Bolt on counter-hold tool -T10172- and counter-hold tool -T10554/1- using knurled screws -T10554/2- -arrows-.

Removing

Note

- *Place a cloth under the camshaft adjuster and tensioning roller to catch the engine oil which runs out.*
- *The contact points between the toothed belt and components - such as camshaft pulleys, tensioning roller and idler pulley - must be kept free of oil.*

– Set piston of cylinder no. 1 to TDC position ⇒ p4.4 iston to TDC position", page 66

Fitting counter-hold tool -T10554-

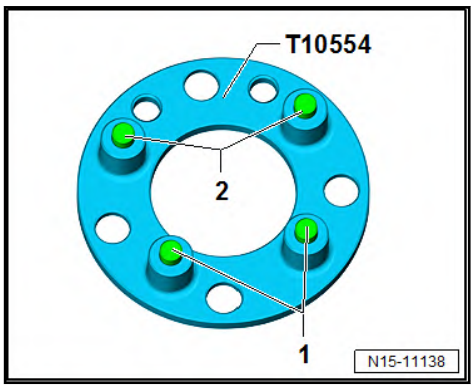

- The contours of pins -1- and -2- of counter-hold tool -T10554/1- are not distributed evenly on the bolt circle.

- They correspond to the contour of the bolt circle in the camshaft adjuster.

Note

- *When opening the plug on the inlet camshaft, a small amount of oil may escape.*
- *The contact points between the toothed belt and components - such as camshaft pulleys, tensioning roller and idler pulley - must be kept free of oil.*
- *Therefore, cover the area around the plug with a cloth.*

– Use counter-hold tool -T10554/1- and counter-hold tool -T10172- to lock camshaft in position (push in »clockwise direction«).

– Loosen plug -1-, and unscrew it.

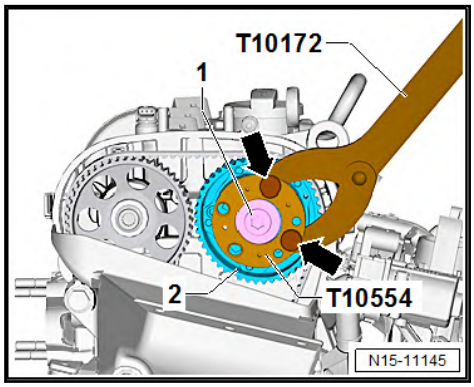

– Fit counter-hold tool -T10554/1- with counter-hold tool -T10172- again, to loosen securing bolt -1- of camshaft adjuster.

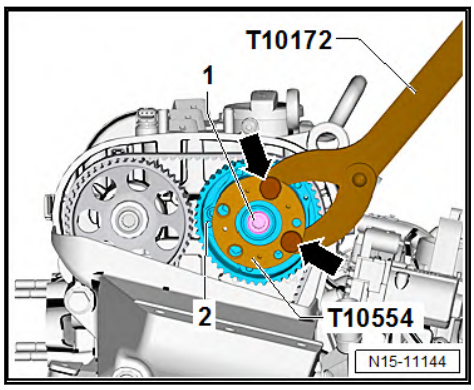

– Loosen bolt -1- of camshaft adjuster -2-.

– Loosen securing bolt of toothed belt pulley on exhaust side. ⇒ a3.4 nd installing toothed belt pulley", page 146

– Detach toothed belt from camshafts. ⇒ t2.6 oothed belt from camshaft", page 131

– Unscrew securing bolt for camshaft adjuster and remove camshaft adjuster.

Installing

- Camshafts are located in "TDC" position.
- The camshaft pulleys are properly aligned with each other.

- Crankshaft is in “TDC position”.

Note

- *Renew bolts that are tightened with turning further angle.*
- *Renew O-ring of plug if damaged.*
- *Make sure to reinstall the guide sleeve ⇒ Item 7 (page 86) .*

– Renew bolt -1- for camshaft adjuster on inlet side, and screw it in to stop by hand.

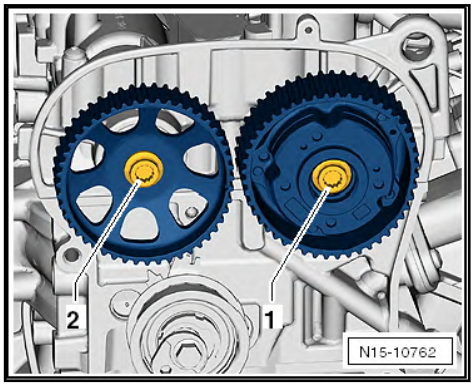

– Renew bolt -2- for toothed belt pulley on exhaust side, and screw it in to stop by hand.

- It should just be possible to turn camshaft pulleys on camshafts but no rocking is permissible.

– Fit toothed belt onto camshafts ⇒ t2.6 oothed belt from camshaft”, page 131 .

Pre-tightening

Note

- *If the camshafts are turned when pre-tightening with the crankshaft fixed in place using the locking pin -T10340-, the valve timing will be changed.*
- *If the crankshaft is not locked in place, the deviations that occur when counter holding will be transferred to the crankshaft via the toothed belt.*
- *The valve timing will not be affected in this case.*

– Before pre-tightening, unscrew locking pin -T10340-.

– Hold inlet camshaft in position using counter-hold tool -T10554- and counter-hold tool -T10172-.

– Pre-tighten bolt -1- to specified pre-tightening torque in two stages.

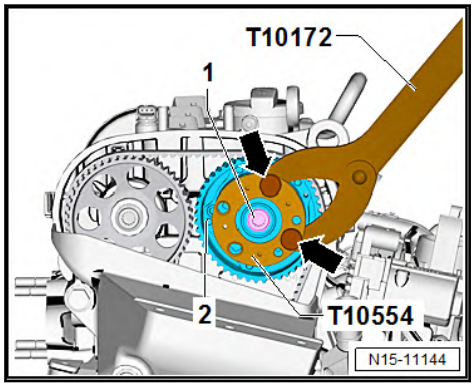

Stage	Securing bolt for camshaft adjuster	Torque setting
1)	-1-	18 Nm
2)	-1-	50 Nm

– Hold inlet camshaft in position using counter-hold tool -T10172- and adapter -T10172/1-.

– Pre-tighten bolt -1- to specified pre-tightening torque in two stages.

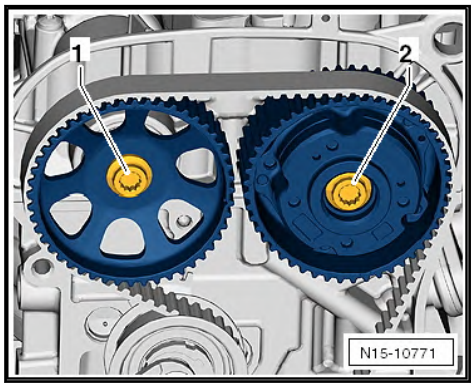

Stage	Securing bolt for toothed belt pulley	Torque setting
1)	-1-	18 Nm
2)	-1-	50 Nm

Tightening to final specified torque

– Screw locking pin -T10340- back in.

– Tighten bolt -1- for camshaft adjuster to final torque.

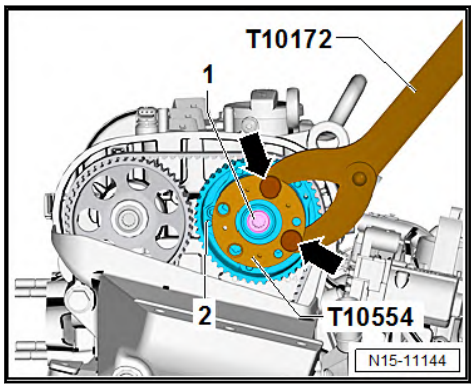

Stage	Securing bolt for camshaft adjuster	Angle to turn bolts
1)	-1-	90°

– Tighten securing bolt for toothed belt pulley on exhaust side to final specified torque.

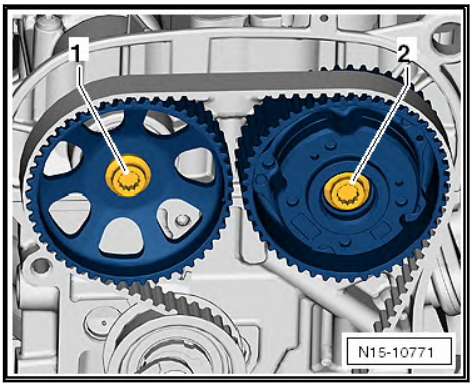

Stage	Securing bolt for toothed belt pulley	Angle to turn bolts
1)	-1-	90°

– Screw in plug -1-, and tighten it to specified torque.

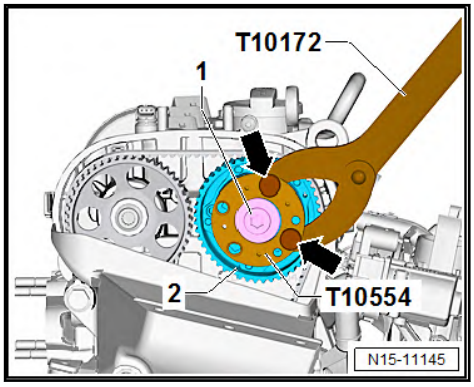

– Hold inlet camshaft in position using counter-hold tool -T10172A- and counter-hold tool -T10554-.

Stage	Plug for camshaft adjuster	Torque setting
1)	-1-	20 Nm

Further assembly is performed in the reverse order of removal.

Torque settings

- ⇒ o1.2 verview - cylinder block (pulley end)", page 36
- ⇒ o1.1 verview - poly V-belt drive", page 36
- ⇒ o2.1 verview - assembly mountings", page 20
- ⇒ o1.1 verview - cylinder head", page 69
- ⇒ o2.2 verview - thermostat", page 209
- ⇒ o2.1 verview - toothed belt", page 85

3.4 Removing and installing toothed belt pulley

Toothed belt pulley for exhaust camshaft

Special tools and workshop equipment required

- Torque wrench -VAS 6583-

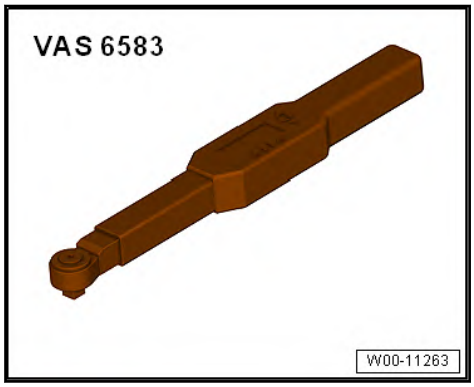

- Counterhold tool -T10554/1-

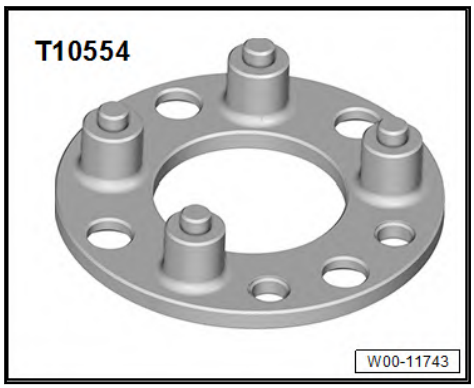

- Knurled screws -T10554/2- (not illustrated)
- Counterhold tool -T10172A-

Removing

– Set piston in cylinder no. 1 to TDC position. ⇒ p4.4 iston to TDC position", page 66

– Loosen securing bolt -2- for camshaft adjuster on inlet side. ⇒ a3.3 nd installing camshaft adjuster", page 140

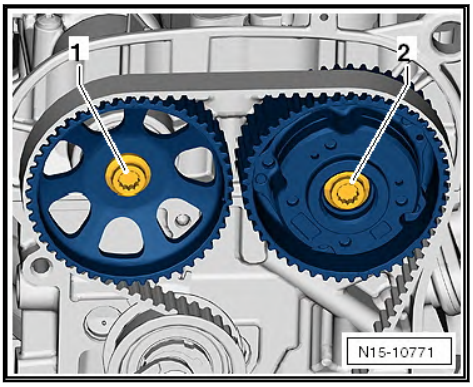

– Loosen bolts -1- approx. 1 turn using counter-hold tool -T10172- with adapter -T10172/2- and -T10172/1-.

– Detach toothed belt from camshafts. ⇒ t2.6 oothed belt from camshaft", page 131

– Unscrew bolt for toothed belt pulley on exhaust side, and remove toothed belt pulley.

Installing

- Camshafts are located in "TDC" position.
- The camshaft pulleys are properly aligned with each other.
- Crankshaft is in "TDC position".

Note

♦ *Renew bolts that are tightened with turning further angle.*

♦ *Renew O-ring of plug if damaged.*

– Renew bolt -1- for camshaft adjuster on inlet side, and screw it in to stop by hand.

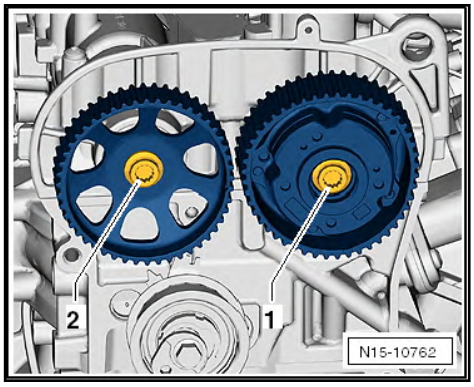

– Renew bolt -2- for toothed belt pulley on exhaust side, and screw it in to stop by hand.

- It should just be possible to turn camshaft pulleys on camshafts but no rocking is permissible.

– Fit toothed belt onto camshafts. ⇒ t2.6 oothed belt from camshaft", page 131

Pre-tightening

– Hold inlet camshaft in position using counter-hold tool -T10554- and counter-hold tool -T10172-.

– Pre-tighten bolt -1- to specified pre-tightening torque in two stages.

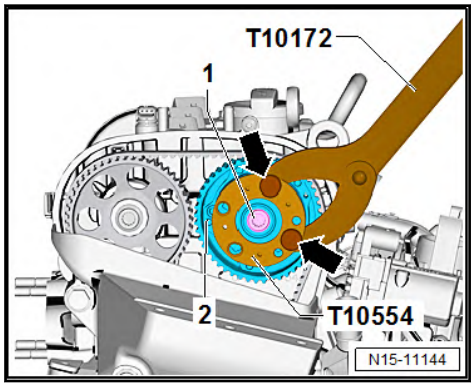

Stage	Securing bolt for camshaft adjuster	Torque setting
1)	-1-	18 Nm
2)	-1-	50 Nm

– Hold inlet camshaft in position using counter-hold tool -T10172- and adapter -T10172/1-.

– Pre-tighten bolt -1- to specified pre-tightening torque in two stages.

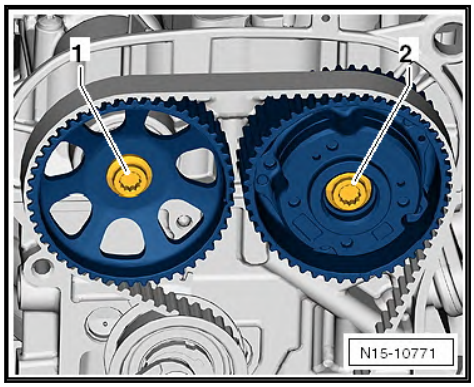

Stage	Securing bolt for toothed belt pulley	Torque setting
1)	-1-	18 Nm
2)	-1-	50 Nm

Tightening to final specified torque

– Tighten bolt -1- for camshaft adjuster to final torque.

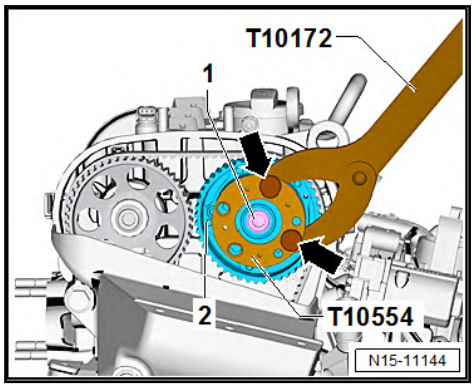

Stage	Securing bolt for camshaft adjuster	Angle to turn bolts
1)	-1-	90°

– Tighten securing bolt for toothed belt pulley on exhaust side to final specified torque.

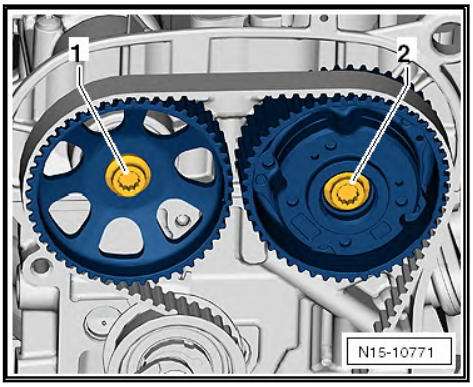

Stage	Securing bolt for toothed belt pulley	Angle to turn bolts
1)	-1-	90°

– Screw in plug -1-, and tighten it to specified torque.

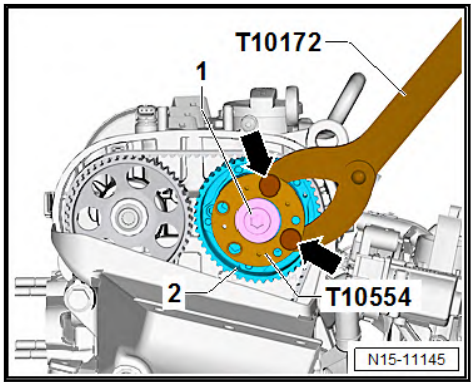

– Hold inlet camshaft in position using counter-hold tool -T10172A- and counter-hold tool -T10554-.

Stage	Plug for camshaft adjuster	Torque setting
1)	-1-	20 Nm

Further assembly is performed in the reverse order of removal.

Specified torques:

- ⇒ o1.2 verview - cylinder block (pulley end)", page 36
- ⇒ o1.1 verview - poly V-belt drive", page 36
- ⇒ o2.1 verview - assembly mountings", page 20
- ⇒ o1.1 verview - cylinder head", page 69
- ⇒ o2.2 verview - thermostat", page 209
- ⇒ o2.1 verview - toothed belt", page 85

3.5 Removing and installing camshaft oil seal

⇒ a3.5.1 nd installing camshaft oil seal, pulley end, ▸ 22.2012", page 150

⇒ a3.5.2 nd installing camshaft oil seal, pulley end, 22.2012 ▸", page 153

⇒ a3.5.3 nd installing camshaft oil seal, exhaust camshaft, gear-box end", page 155

3.5.1 Removing and installing camshaft oil seal, pulley end, ▸ 22.2012

Special tools and workshop equipment required

- Extractor hook -T20143/1-

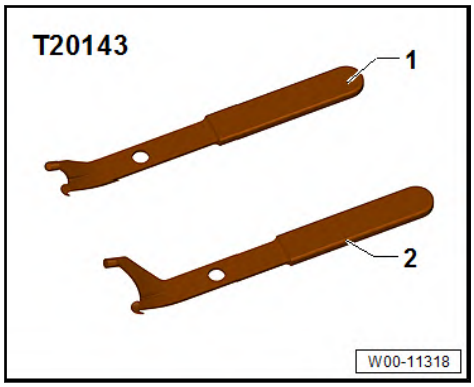

- Assembly tool -T10478 B-

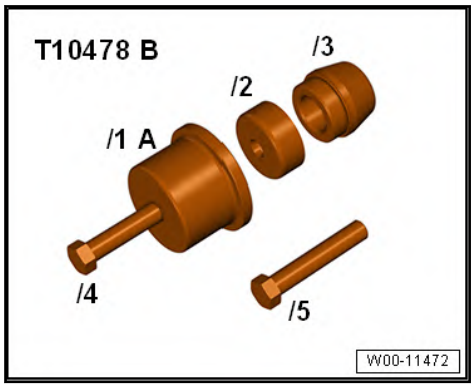

- Counterhold tool -T10172A-

Removing

– Support engine in installation position. ⇒ e2.5.1 ngine in installation position, on camshaft housing (right-side)", page 24

– Set piston of cylinder no. 1 to “TDC” position. ⇒ p4.4 iston to TDC position”, page 66

– Remove engine support. ⇒ a1.4 nd installing engine support”, page 41

– Mark direction of rotation of toothed belt with marker.

– Loosen plug of camshaft adjuster and unscrew. ⇒ a3.3 nd installing camshaft adjuster”, page 140

– Loosen securing bolts of toothed belt pulley and camshaft adjuster. ⇒ a3.3 nd installing camshaft adjuster”, page 140

Note

♦ *When adjusting the valve timing, both camshaft pulleys must be loose.*

♦ *Therefore, both camshaft pulleys must be loosened even if only one seal is being renewed.*

– Unscrew securing bolts for camshaft pulley and remove gear wheel.

– Remove seal -1- using extractor hook -T20143/1-.

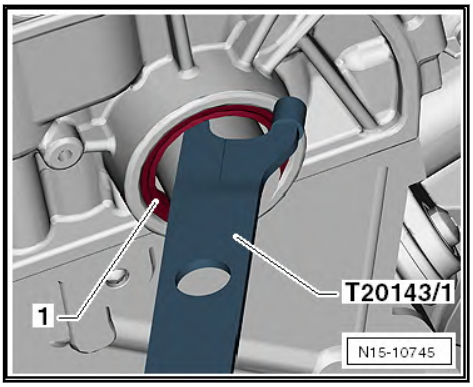

Installing

Note

Do not lubricate new seal.

– Put together assembly sleeves -T10478/2- and -T10478/3- in -direction of arrow-.

– Fit new seal in -direction of arrow- onto assembly sleeve -T10478/2-.

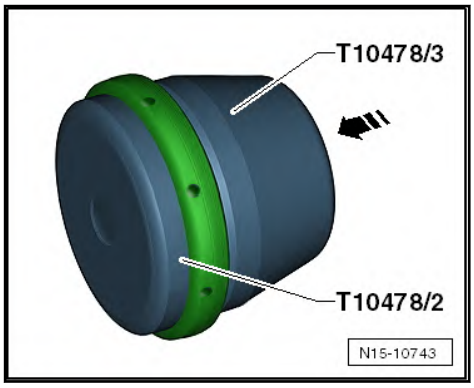

– Pull off assembly sleeve -T10478/3- in -direction of arrow-.

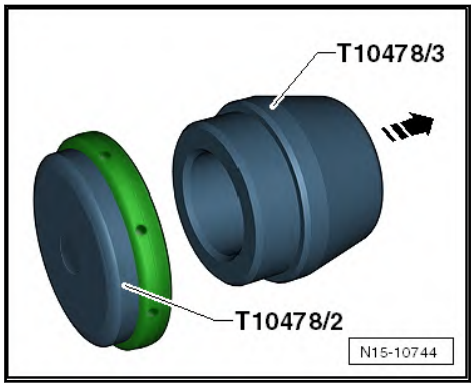

– Fit assembly sleeve -T10478/2- with seal -1- on camshaft.
– Draw in thrust piece -T10478/1- onto stop using old securing bolt of camshaft adjuster -2-.

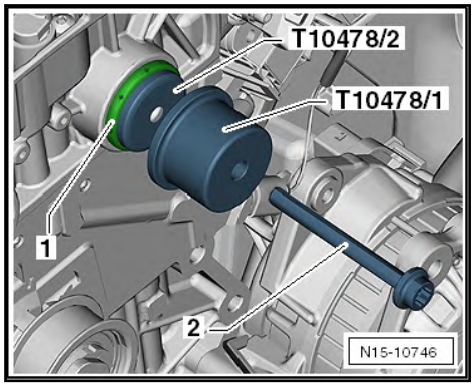

Note

When installing the seal of the exhaust camshaft, bolt -T10478/4- is used for this purpose.

– Adjust valve timing ⇒ v2.5 alve timing", page 120 .

Further assembly is basically a reverse of the dismantling sequence.

Torque settings

- Cover for coolant pump toothed belt ⇒ o1.1 verview - cylinder head", page 69
- Securing bolts for camshaft pulleys and tensioning roller ⇒ o1.2 verview - cylinder block (pulley end)", page 36

Component	Torque setting
Crankcase plug	30 Nm

3.5.2 Removing and installing camshaft oil seal, pulley end, 22.2012 ▸

Note

On vehicles as of week 22 of 2012, a modified tensioning roller is installed which simplifies the process of renewing the camshaft oil seal.

Special tools and workshop equipment required

- Extractor hook -T20143/1-

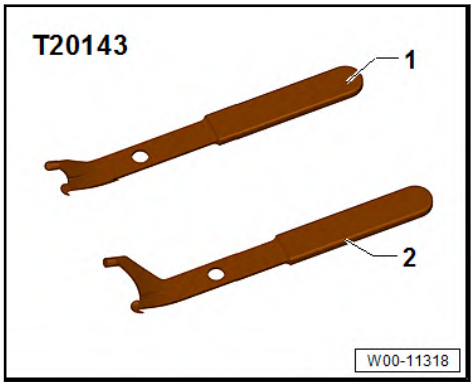

- Assembly tool -T10478B-

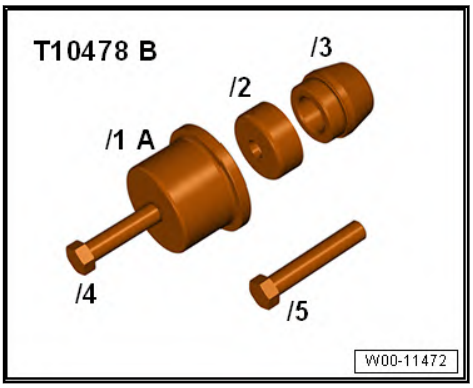

- Counterhold tool -T10172A-

Removing

– Set piston of cylinder no. 1 to “TDC” position. ⇒ p4.4 iston to TDC position”, page 66

– Mark direction of rotation of toothed belt with marker.

– Loosen plug of camshaft adjuster and unscrew. ⇒ a3.3 nd installing camshaft adjuster”, page 140

– Loosen securing bolts of toothed belt pulley and camshaft adjuster. ⇒ a3.3 nd installing camshaft adjuster", page 140

Note

- *When adjusting the valve timing, both camshaft pulleys must be loose.*
- *Therefore, both camshaft pulleys must be loosened even if only one seal is being renewed.*

– Unscrew securing bolts for camshaft pulley and remove gear wheel.

– Remove seal -1- using extractor hook -T20143/1-.

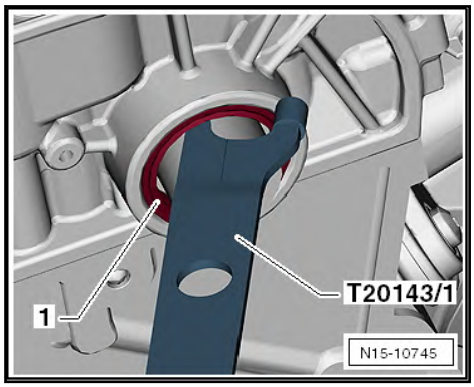

Installing

Note

Do not lubricate new seal.

– Put together assembly sleeves -T10478/2- and -T10478/3- in -direction of arrow-.

– Fit new seal in -direction of arrow- onto assembly sleeve -T10478/2-.

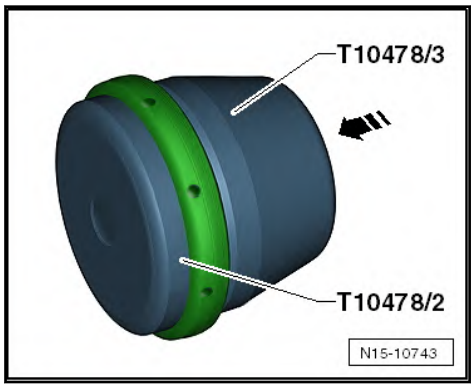

– Pull off assembly sleeve -T10478/3- in -direction of arrow-.

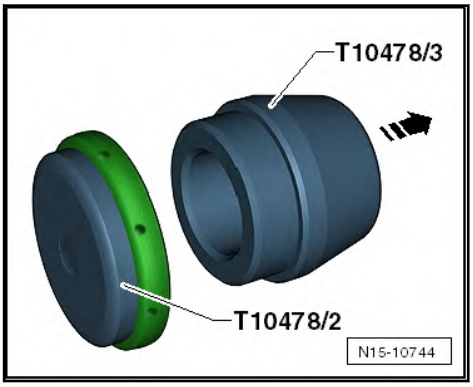

– Fit assembly sleeve -T10478/2- with seal -1- on camshaft.
– Draw in thrust piece -T10478/1- onto stop using old securing bolt of camshaft adjuster -2-.

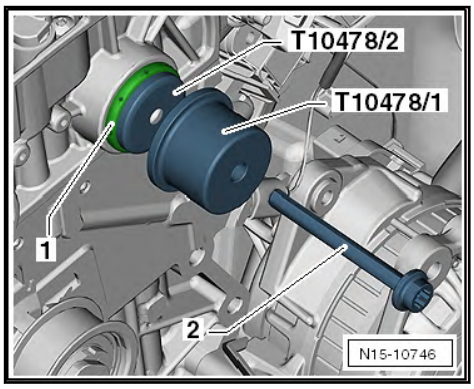

Note

When installing the seal of the exhaust camshaft, bolt -T10478/4- is used for this purpose.

– Adjust valve timing ⇒ v2.5 alve timing", page 120 .

Further assembly is basically a reverse of the dismantling sequence.

Torque settings

- Cover for coolant pump toothed belt ⇒ o1.1 verview - cylinder head", page 69
- Securing bolts for camshaft pulleys and tensioning roller ⇒ o1.2 verview - cylinder block (pulley end)", page 36

Component	Torque setting
Crankcase plug	30 Nm

3.5.3 Removing and installing camshaft oil seal, exhaust camshaft, gearbox end

Special tools and workshop equipment required

- Counter-hold tool -T10172A-

- Locating bolt -T10340-

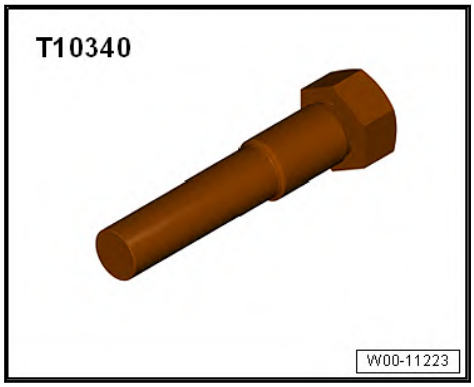

- Extractor hook -T20143/1-

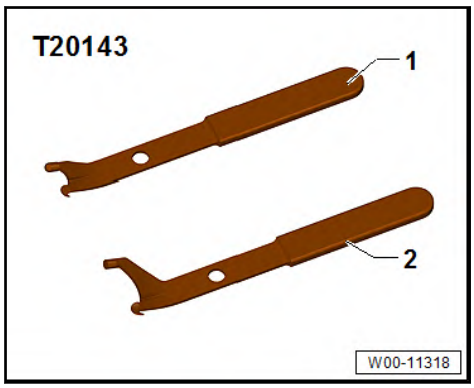

- Assembly tool -T10479-

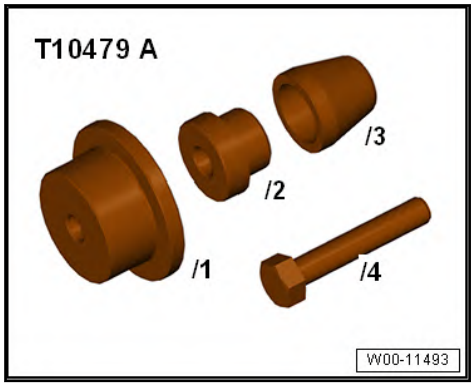

Removing

– Drain coolant ⇒ a1.3 nd adding coolant", page 198 .

– Disconnect all coolant hoses -1- from coolant pump.

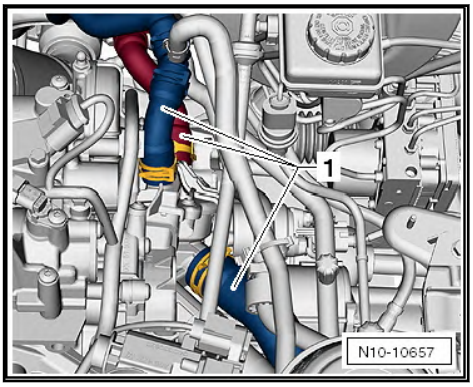

– Set piston of cylinder no. 1 to “TDC” position. ⇒ p4.4 iston to TDC position”, page 66

– Mark position of coolant pump gear -1- with a marker -2- at lug -3-.

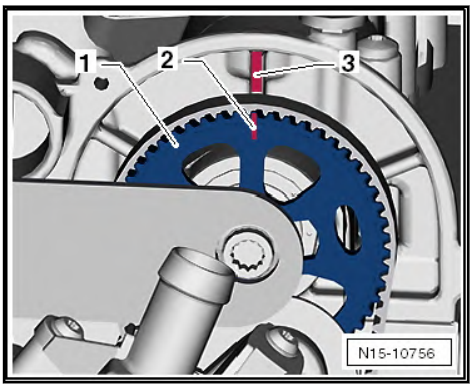

Note

The marking will be used for installing the gear at the correct position at a later point.

– Remove retaining ring -arrow- of gear selector cable.

– Remove gear selector cable -1- from selector lever and lay to side.

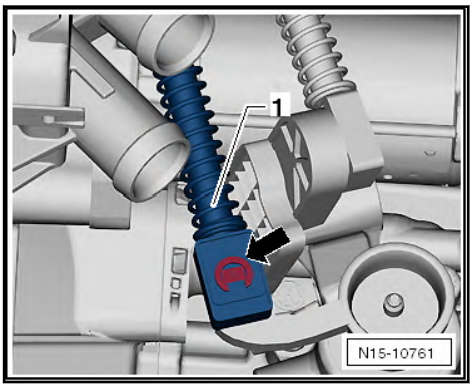

– Unscrew securing bolts -1- through -5- of coolant pump in sequence given.

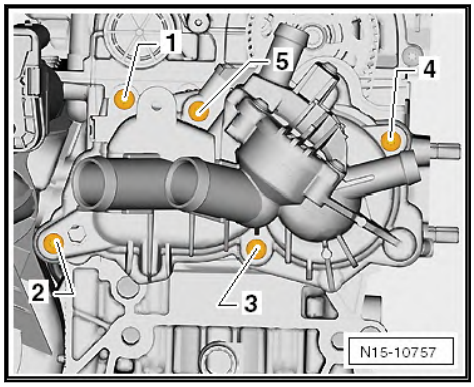

– Detach coolant pump with toothed belt.

Note

- *The toothed belt must be renewed.*
- *The toothed belt for the coolant pump cannot be reused because it will no longer develop the necessary pretension.*

– Secure toothed belt pulley -2- with counterhold tool -T10172A- and unscrew securing bolt -1-.

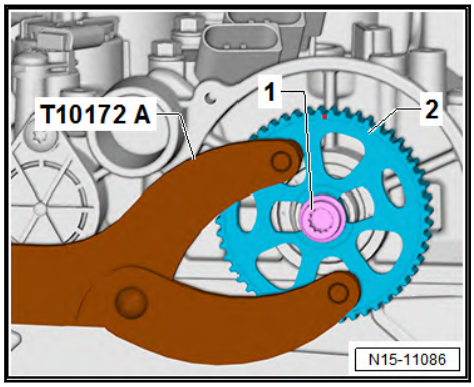

– Remove toothed belt pulley.

– Carefully fit extractor hook -T20143/1- between camshaft and seal -1-.

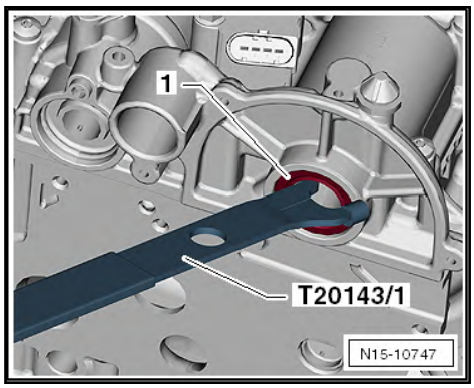

– Lever out seal -1-.

Installing

Note

Do not lubricate new seal.

– Put together assembly sleeves -T10479/2- and -T10479/3-.

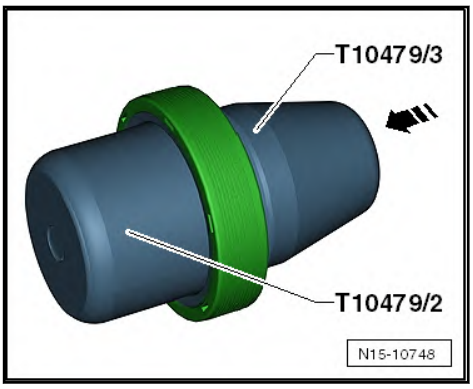

– Fit new seal in -direction of arrow- onto assembly sleeve -T10479/2-.
– Disconnect assembly sleeves -T10479/2- and -T10479/3- in -direction of arrow-.

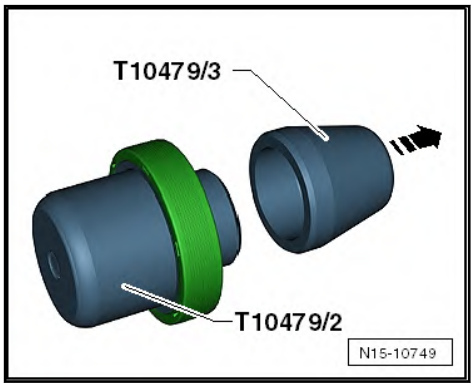

– Fit assembly sleeve -T10479/2- with seal -1- on camshaft.

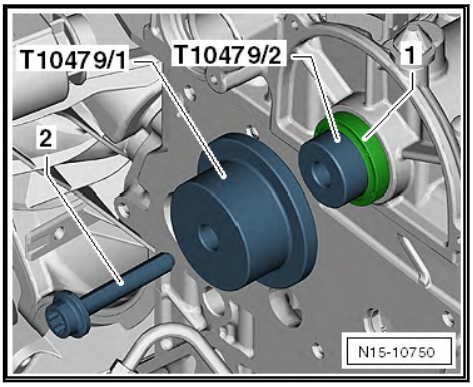

– Fit thrust piece -T1047971- onto assembly sleeve and draw it in to stop with securing bolt -2-.
– Mount toothed belt pulley -2- on camshaft with securing bolt -1-.

Marking on toothed belt pulley must be aligned with lug.

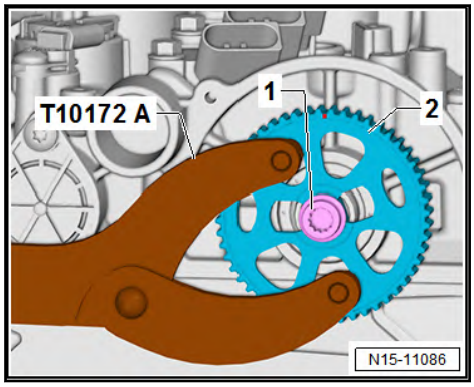

– Secure toothed belt pulley -2- with counterhold tool - T10172A-.
– Tighten securing bolt -1-.
– Moisten coolant pump seal with coolant.
– Fit toothed belt centrally onto camshaft pulley and coolant pump toothed belt pulley.
– Install coolant pump ⇒ a2.3 nd installing coolant pump ", page 212 .

• After completing work, it is essential to ensure that the locking pin -T10340- and the camshaft clamp -T10477- have been removed.

Further assembly is basically a reverse of the dismantling sequence.

– Install selector mechanism to gearbox: ⇒ Rep. gr. 34; Selector mechanism; Overview - selector mechanism.
– Add coolant ⇒ a1.3 nd adding coolant", page 198 .
– Install air filter housing ⇒ a3.2 nd installing air filter housing", page 260 .

Torque settings

♦ ⇒ o2.1 verview - coolant pump", page 206
♦ Crankcase plug: 30 Nm
♦ Camshaft housing cover ⇒ Item 13 (page 70)

3.6 Removing and installing valve stem seals

⇒ a3.6.1 nd installing valve stem seals (cylinder head installed)", page 160

⇒ a3.6.2 nd installing valve stem seals (cylinder head removed)", page 165

3.6.1 Removing and installing valve stem seals (cylinder head installed)

Special tools and workshop equipment required

- Spark plug socket -3122 B-

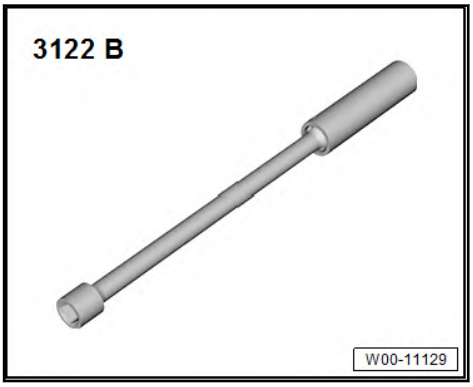

- Removal and installation device for valve cotters -VAS 5161A- with guide plate -VAS 5161A/32-32-.

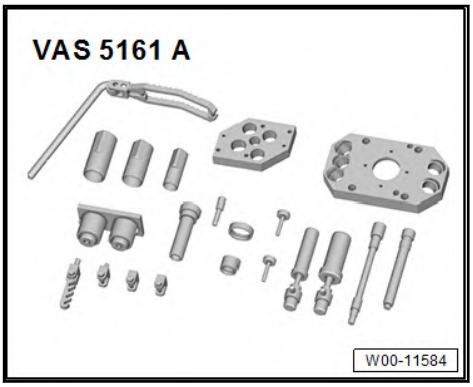

- Compressed air adapter -VAS 5161 A/35- (not illustrated)
- Valve stem seal fitting tool -3365-

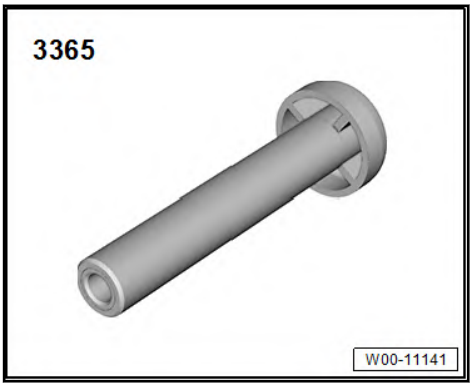

- Valve stem pliers -VAS 6770-

Procedure

– Remove camshaft housing ⇒ a1.3 nd installing camshaft housing", page 78 .

– Mark allocation of roller rocker fingers -1-, hydraulic compensation element -4- and valves -3- for reinstallation.

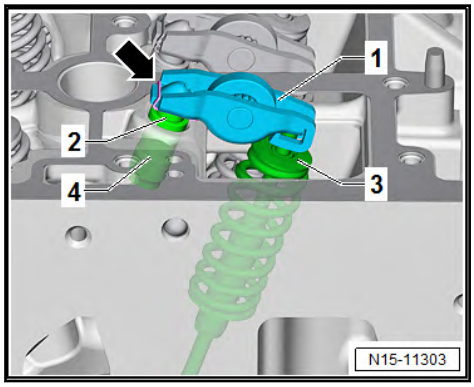

– Remove roller rocker fingers together with compensation elements and place them on a clean surface.

– Unscrew spark plugs with spark plug socket -3122 B-.

– Unscrew locking pin -T10340-.

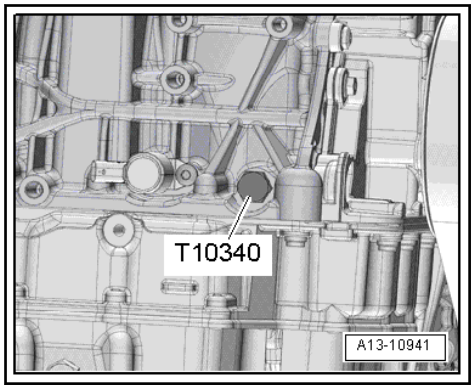

– Set piston of respective cylinder to “bottom dead centre”.

Note

- *The pistons of cylinders no. 1 and no. 4 are at »TDC« position after the camshaft housing has been removed.*
- *The pistons of cylinders no. 2 and no. 3 are at »bottom dead centre« position after the camshaft housing has been removed.*
- *Crank engine via crankshaft half a turn in direction of engine rotation. The pistons for cylinders no. 1 and no. 4 are at »bottom dead centre« position.*
- *When cranking the engine, hold and guide the toothed belt by hand to prevent it from being damaged.*

– Fit guide plate -VAS 5161A/32-1- onto cylinder head and secure with knurled screws -VAS 5161/12-.

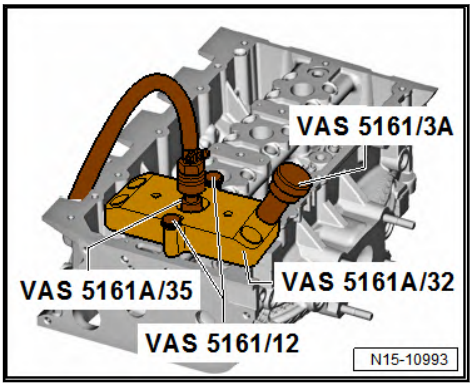

– Screw compressed air adapter -VAS 5161 A/35- into the respective park plug thread hand-tight.

– Connect adapter to compressed air supply using a commercially available union and apply pressure continuously.

• Minimum pressure: 6 bar.

– Insert punch -VAS 5161/3A- into guide plate. Use a plastic hammer to knock loose the firmly seated valve cotters.

– Screw toothed piece -VAS 5161/6- with hooking fork -VAS 5161/5- into guide plate.

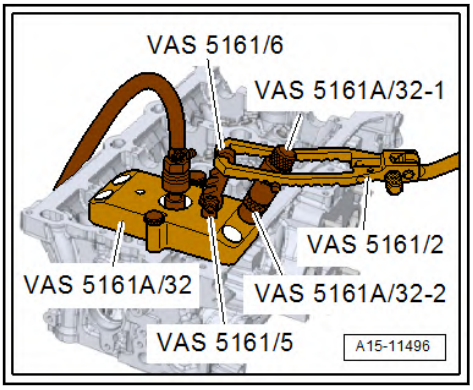

– Slide sleeve -VAS 5161A/32-2- onto assembly cartridge and insert cartridge into guide plate -VAS 5161A/32-3-.

– Attach pressure fork -VAS 5161/2- to toothed piece at a suitable angle and press assembly cartridge down.

– At the same time, turn knurled screw of assembly cartridge clockwise until tips engage in valve cotters.

– Move knurled screw back and forth to press apart valve cotters and capture them in assembly cartridge.

– Release pressure fork.

– Remove installation cartridge.

– Unbolt guide plate and move to side.

• The compressed air hose remains connected.

– Remove valve spring and valve spring plate.

– Pull off valve stem seal using valve stem pliers -VAS 6770-.

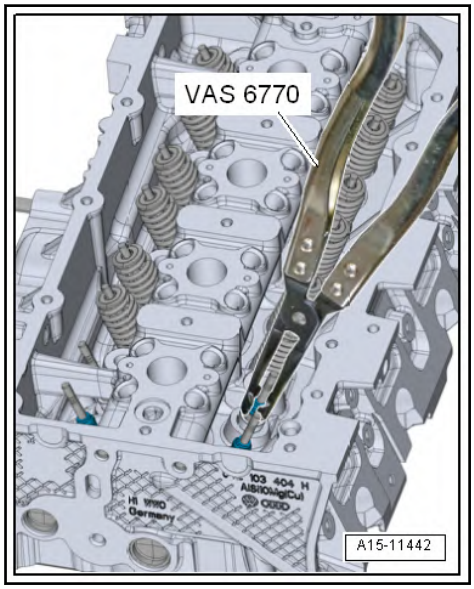

Note

Risk of damage when installing valve stem seals.

– Lightly oil sealing lip of valve stem seal -A-.

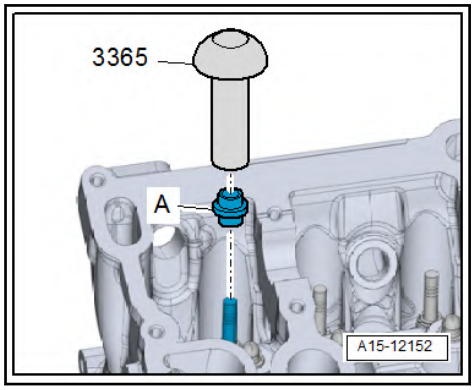

– Carefully press valve stem oil seal -A- onto valve guide using valve stem seal fitting tool -3365-.

If valve cotters have been removed from assembly cartridge:

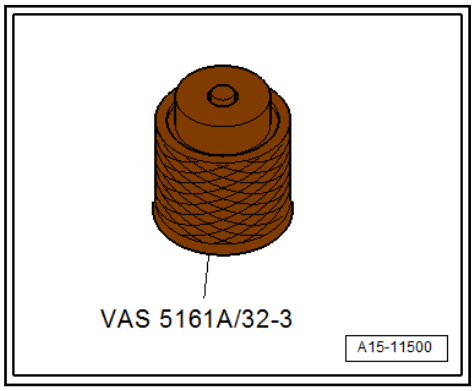

– First, insert valve cotters into insertion device -VAS 5161 A/32-3-.

– Press down spring washer until three grooves are visible.

– Fit valve cotters into grooves.

• Larger diameter of valve cotters faces upwards.

– Release the spring washer. The spring force pushes the washer back upwards and holds the valve cotters in place.

– Press assembly cartridge -VAS 5161A/32-1- onto insertion device from above and pick up valve cotters.

– To do this, move knurled screw back and forth to press apart valve cotters and capture them in assembly cartridge.

– Bolt guide plate -VAS 5161A/32-1- onto cylinder head again.

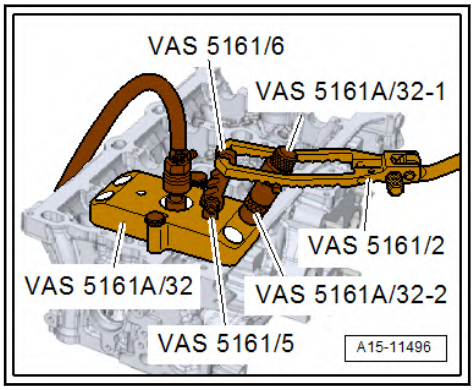

– Insert assembly cartridge -VAS 5161A/32-2- with sleeve -VAS 5161A/32-3- into guide plate.

– Press pressure fork downwards and pull knurled screw upwards, turning it clockwise and anticlockwise. This inserts the valve cotters.

– Reduce pressure on pressure fork whilst pulling on knurled screw.

– Repeat procedure on each valve.

Assembling

Assembly is carried out in reverse sequence; note the following:

– Install spark plugs ⇒ Maintenance; Booklet .

– Install camshaft housing ⇒ a1.3 nd installing camshaft housing", page 78 .

Torque settings

♦ ⇒ o1.1 verview - cylinder head", page 69

3.6.2 Removing and installing valve stem seals (cylinder head removed)

Special tools and workshop equipment required

- Removal and installation device for valve cotters -VAS 5161A- with guide plate -VAS 5161A/32-32-.

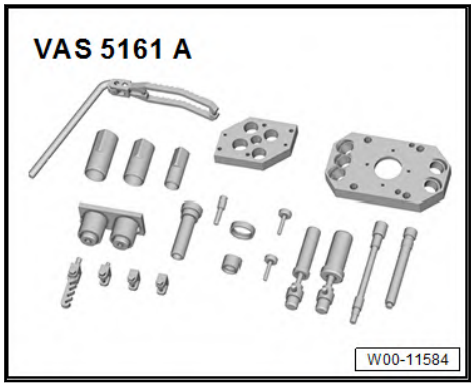

- Engine and gearbox support -VAS 6095-

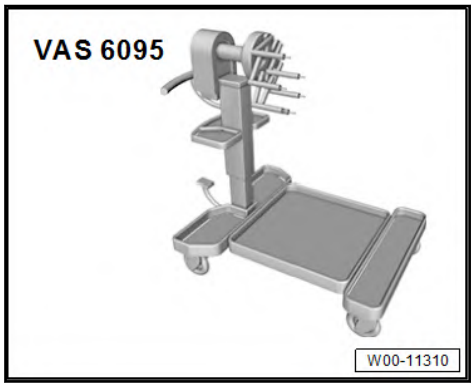

- Cylinder head tensioning device -VAS 6419-

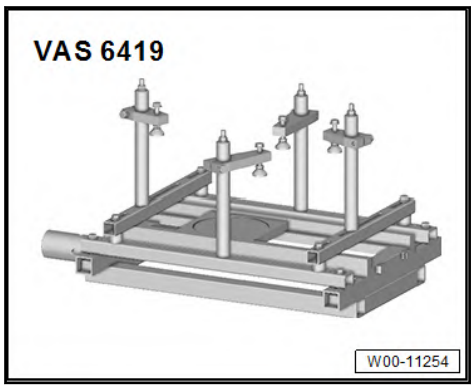

- Valve stem pliers -VAS 6770-

- Valve stem seal fitting tool -3365-

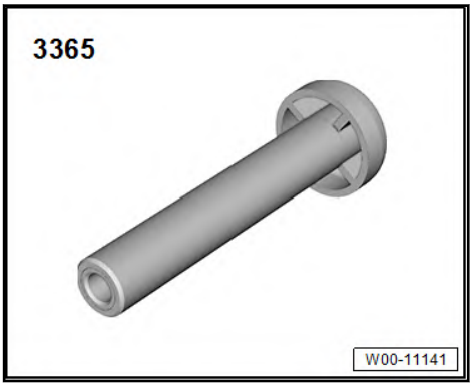

Procedure

– Remove cylinder head ⇒ a1.2 nd installing cylinder head", page 72 .

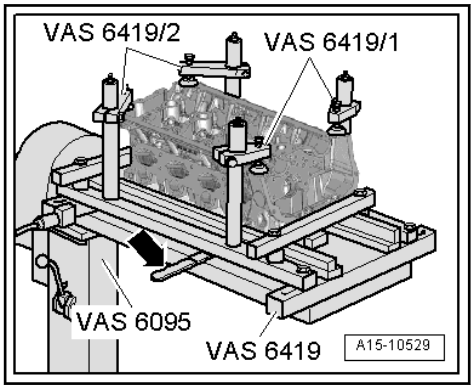

– Insert cylinder head tensioning device -VAS 6419- into engine and gearbox support -VAS 6095-.
– Tension cylinder head on cylinder head tensioning device as shown in illustration.
– Connect cylinder head tensioning device to compressed air.
– Use lever -arrow- to slide air cushion under combustion chamber from which valve stem seals are to be removed.
– Allow compressed air to flow into air cushion until it lies against valve disc.
– Fit guide plate -VAS 5161A/32-1- onto cylinder head and secure with knurled screws -VAS 5161/12-.

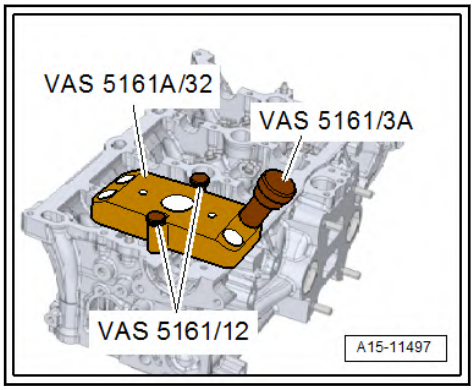

– Insert punch -VAS 5161/3A- into guide plate. Use a plastic hammer to knock loose the firmly seated valve cotters.

– Screw toothed piece -VAS 5161/6- with hooking fork -VAS 5161/5- into guide plate.

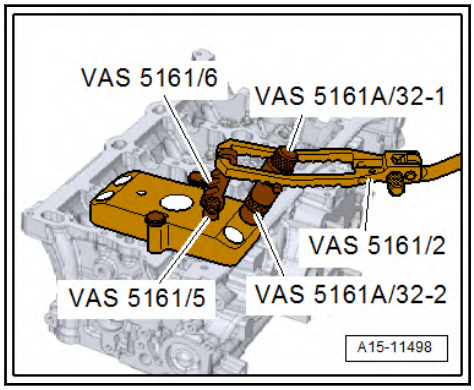

– Slide sleeve -VAS 5161A/32-2- onto assembly cartridge and insert cartridge into guide plate -VAS 5161A/32-3-.
– Attach pressure fork -VAS 5161/2- to toothed piece and press assembly cartridge down.
– At the same time, turn knurled screw of assembly cartridge clockwise until tips engage in valve cotters.
– Move knurled screw back and forth to press apart valve cotters and capture them in assembly cartridge.
– Release pressure fork.
– Remove installation cartridge.
– Unbolt guide plate and move to side.
– Remove valve spring and valve spring plate.
– Pull off valve stem seal using valve stem pliers -VAS 6770-.

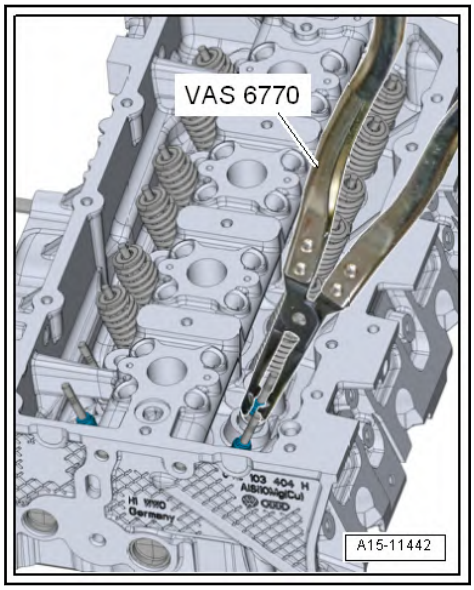

Note

Risk of damage when installing valve stem seals.

– Lightly oil sealing lip of valve stem seal -A-.

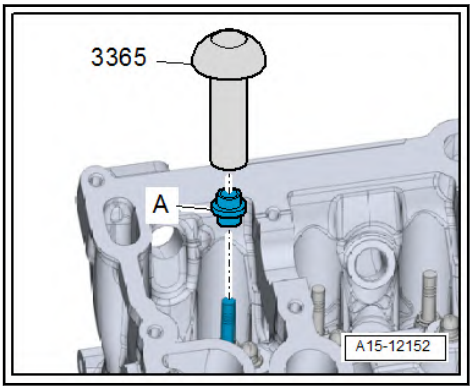

– Carefully press valve stem oil seal -A- onto valve guide using valve stem seal fitting tool -3365-.

If valve cotters have been removed from assembly cartridge:

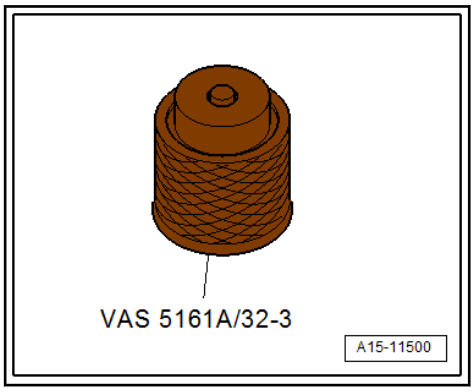

– First, insert valve cotters into insertion device -VAS 5161 A/32-3-.

– Press down spring washer until three grooves are visible.

– Fit valve cotters into grooves.

• Larger diameter of valve cotters faces upwards.

– Release the spring washer. The spring force pushes the washer back upwards and holds the valve cotters in place.

– Press assembly cartridge -VAS 5161A/32-1- onto insertion device from above, and pick up valve cotters.

– To do this, move knurled screw back and forth to press apart valve cotters and capture them in assembly cartridge.

– Bolt guide plate -VAS 5161A/32-1- onto cylinder head again.

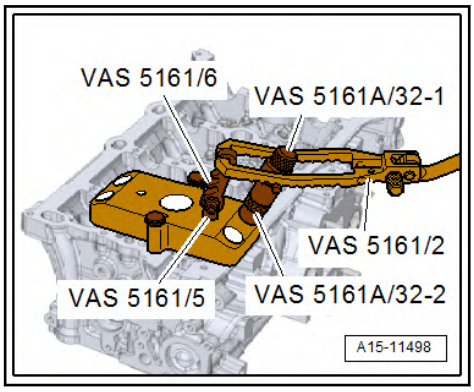

– Insert assembly cartridge -VAS 5161A/32-2- with sleeve -VAS 5161A/32-3- into guide plate.

- Press pressure fork downwards and pull knurled screw upwards, turning it clockwise and anticlockwise. This inserts the valve cotters.
- Reduce pressure on pressure fork whilst pulling on knurled screw.
- Repeat procedure on each valve.
- Install cylinder head ⇒ a1.2 nd installing cylinder head", page 72 .

4 Inlet and exhaust valves

⇒ v4.1 alve guides", page 171

4.1 Checking valve guides

Special tools and workshop equipment required

- Universal dial gauge holder -VW 387-
- Dial gauge

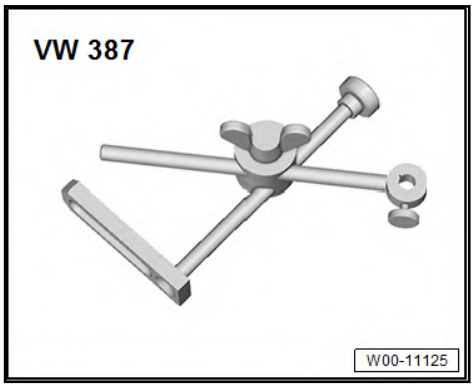

Test sequence

– Insert new valve in guide. The end of the valve stem must be flush with the guide. On account of differing stem diameters, only use inlet valve in inlet guide and exhaust valve in exhaust guide.

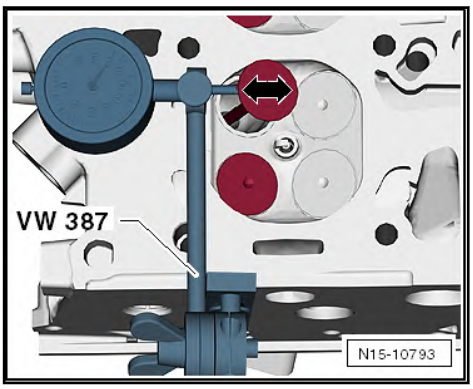

– Determine lateral play by moving valve in -direction of arrow-.

Wear limit: 0.5 mm

If wear limit is exceeded:

– Repeat measurement with a new valve.

If wear limit is exceeded again:

– Renew cylinder head.

17 – Lubrication

1 Sump, oil pump

1.1 Assembly overview - sump/oil pump

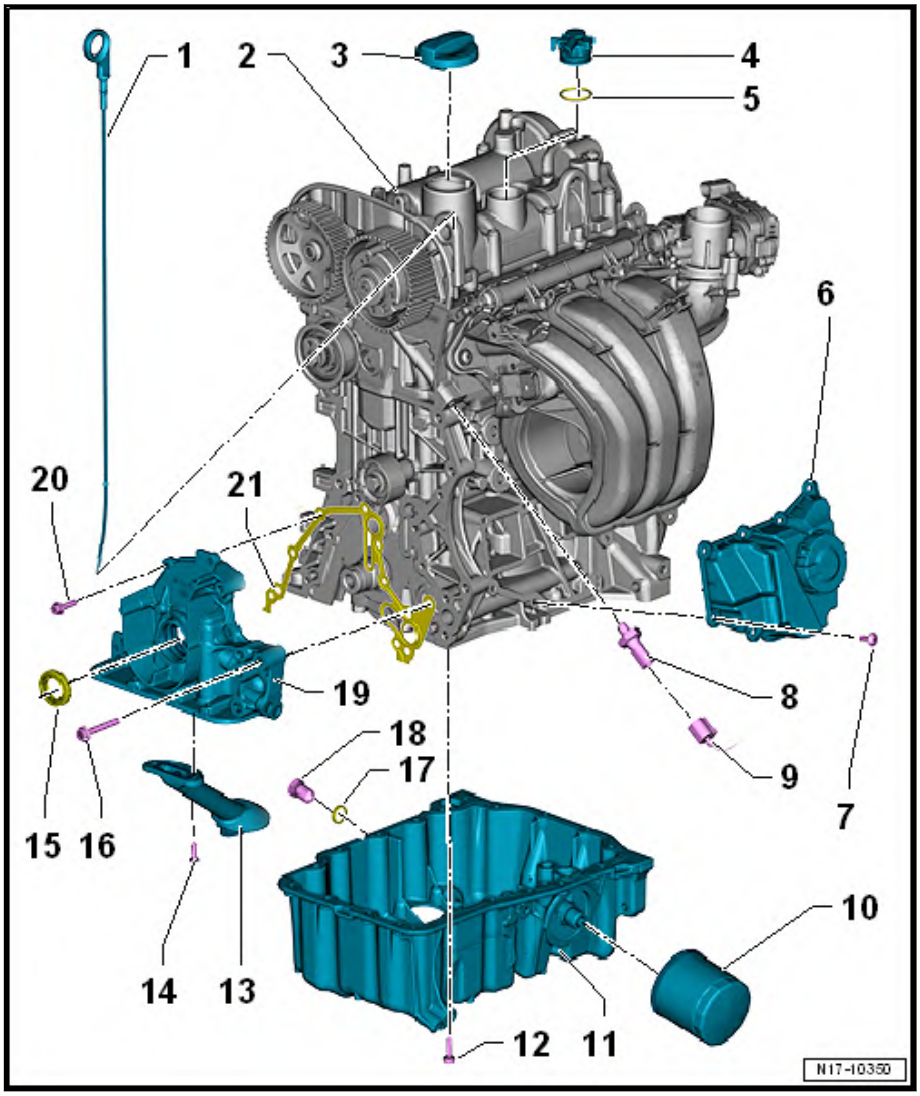

1 - Oil dipstick

- ❑ Oil capacities ⇒ Maintenance; Booklet ; Engine oil: capacities and specifications
- ❑ Check engine oil level (min. and max. marks) ⇒ Maintenance; Booklet ; Engine oil level: check.

2 - Camshaft case

3 - Cap

- ❑ Renew seal if damaged.

4 - Non-return valve

5 - Seal

- ❑ Renew if damaged

6 - Oil separator

- ❑ To remove, intake manifold must be removed ⇒ a4.2 nd installing intake manifold", page 264 .
- ❑ Install with sealant D 176 501 A1

7 - Bolt

- ❑ 9 Nm

8 - Oil pressure switch -F1-

- ❑ Renew O-ring after each removal
- ❑ Removing and installing ⇒ page 189
- ❑ For pressure range of 0.3 … 0.6 bar
- ❑ Checking oil pressure switch ⇒ o3.2 il pressure and oil pressure switch", page 190 .
- ❑ 20 Nm

Note

- ♦ *The oil pressure switch is fitted with a captive seal.*
- ♦ *The seal is not designed for repeated use.*

9 - Connector

10 - Oil filter

- ❑ Observe fitting instructions on oil filter
- ❑ Remove and install with oil filter tool -3417-.
- ❑ If the connecting union for oil filter in sump became loose ⇒ page 174
- ❑ 20 Nm

11 - Sump

- ❑ Removing and installing ⇒ a1.3 nd installing sump", page 176
- ❑ Tighten loosened connecting union for oil filter ⇒ page 174

- ❑ Clean sealing surface before fitting.
- ❑ Install with silicone sealant D 176 501 A1

12 - Bolt

- ❑ Renew after removal
- ❑ 8 Nm +90°

13 - Suction line

- ❑ With integrated seal

14 - Bolt

- ❑ 8 Nm

15 - Seal

- ❑ Renew if damaged
- ❑ Removing and installing ⇒ c1.5 rankshaft oil seal - belt pulley end", page 43

16 - Bolt

- ❑ 20 Nm

17 - Seal

- ❑ Renew after removal

Note

New procedure for all other service types *⇒ page 175*

18 - Oil drain plug

Note

Needs to be renewed only on 1st oil change after assembly in factory *⇒ page 175* .

- ❑ 30 Nm

19 - Oil pump

- ❑ Renew only as complete unit
- ❑ Removing and installing ⇒ a1.4 nd installing oil pump", page 181

20 - Bolt

- ❑ Renew after removal
- ❑ 8 Nm +90°

21 - Seal

- ❑ Renew after removal

Tightening connecting union for oil filter

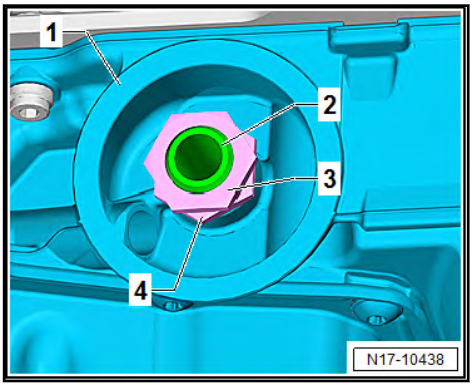

- If the connecting union -2- in the sump -1- became loose, retighten it as described below.

Use only the two nuts -3 and 4- for this procedure.

- Hexagon nut -068 115 723-, qty. 2, ⇒ Electronic Parts Catalogue

– Screw nuts -3- and -4- onto connecting union -2-, and counterlock them.

– Tighten connecting union -2- using nut -3-.

– Loosen the two nuts and remove them, taking care not to loosen the connecting union.

Torque settings

Connecting union	Torque setting
-2-	50 Nm

Oil drain plug with captive seal (factory-installed)

– On first oil change, oil drain plug with captive seal -1- is disposed of.

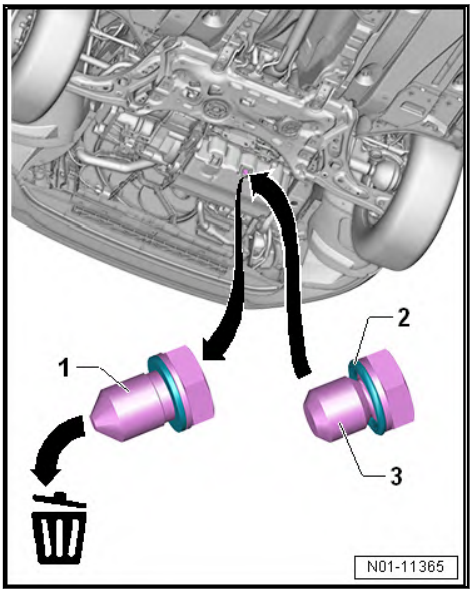

– Install a new oil drain plug -3- with renewable seal -2-.

Oil drain plug with renewable seal (all future oil change services)

– Unscrew oil drain plug -2-, and dispose of old seal -3-.

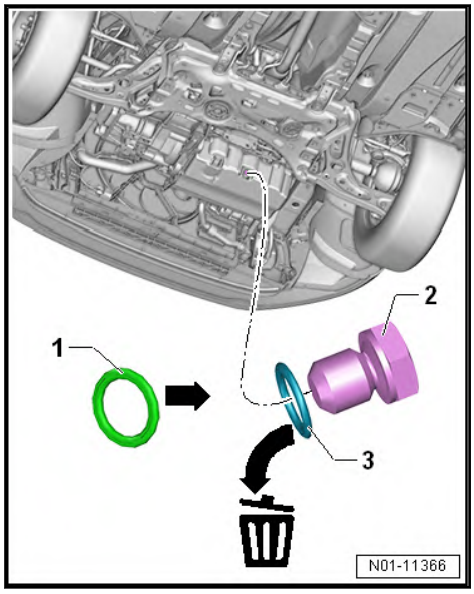

– New oil seal -1- can be renewed individually when oil is changed in the future.

1.2 Engine oil:

Note

- *Risk of damage to catalytic converter.*
- *Oil level must not be above “max.” mark.*

Capacities and specifications ⇒ Maintenance; Booklet ; Engine oil: Capacities and specifications.

Check engine oil level ⇒ Maintenance; Booklet ; Engine oil level: Checking.

1.3 Removing and installing sump

Special tools and workshop equipment required

- Oil filter tool -3417-

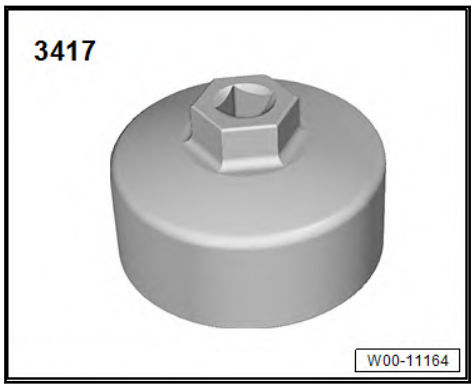

- Multi-point bit -T10058-

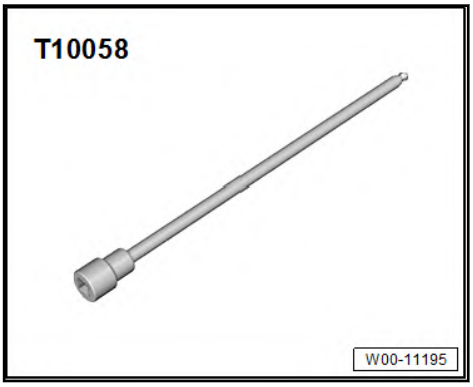

- Torque wrench -V.A.G 1331-

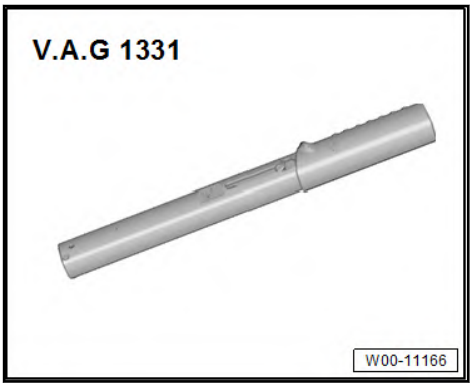

- Hand drill with plastic brush
- Scraper
- Applicator gun -VAS 6966-

- Silicone sealant D 176 501 A1

Removing

– Drain engine oil.

– Remove oil filter with oil filter tool -3417-.

Only vehicles with air conditioner

Note

- *The air conditioning system lines must not be opened.*
- *Prevent damage to condenser and refrigerant lines and hoses.*
- *Do NOT stretch, kink or bend lines and hoses.*

Remove poly V-belt ⇒ a1.3 nd installing poly-V belt", page 38 .

– Remove air conditioner compressor: ⇒ Heating, air conditioning; Rep. gr. 87; Air conditioner compressor; Removing and installing air conditioner compressor.

– Secure air conditioner compressor on lock carrier.

Make sure lines are not kinked.

– Remove securing bolts -arrows- for gearbox.

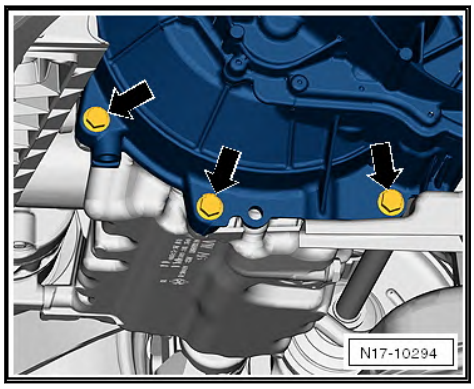

– Unscrew all sump securing bolts -arrows-.

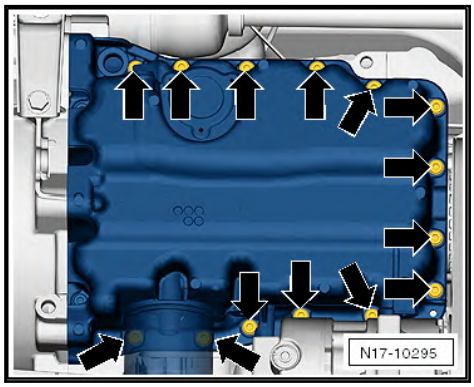

– Unscrew sump securing bolts on gearbox side -arrows- using Allen key, long reach 5 mm -T10058-.

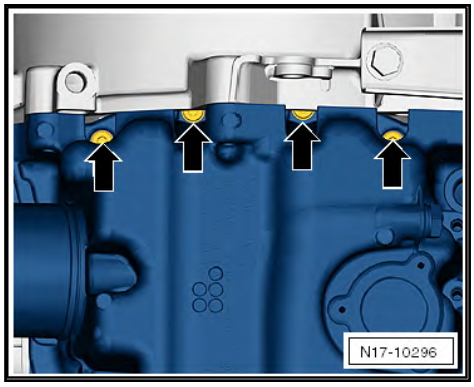

Note

- *The sump is sealed with liquid sealant.*
- *When hardened, the sealant has a high adhesive strength.*

– Carefully lever off sump from cylinder block at recess -arrow- using assembly lever.

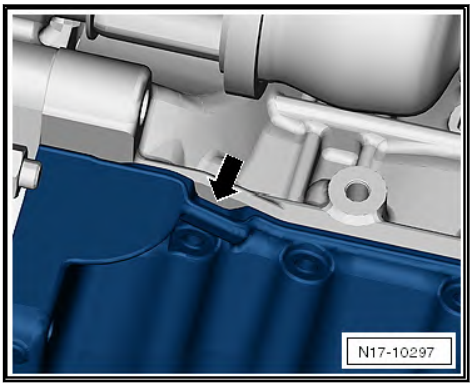

– Remove sump. Loosen sump with light blows of a rubber headed hammer if necessary.

– Remove sealant residues from cylinder block with a flat scraper.

– Remove sealant residues on sump with a rotating brush, e.g. an electric drill with plastic brush attachment (wear eye protection).

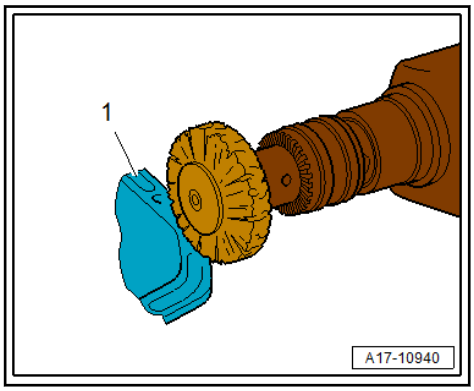

– Clean sealing surfaces. They must be free of oil and grease.

Installing

Note

- *Observe use-by-date of sealant.*
- *The sump must be installed within 5 minutes of applying silicone sealing compound.*
- *The sump can be positioned more easily and with greater security if M6 studs are inserted into the cylinder block flange at two positions as guides.*

– Cut off nozzle on tube at front marking (∅ of nozzle approx. 3 mm).

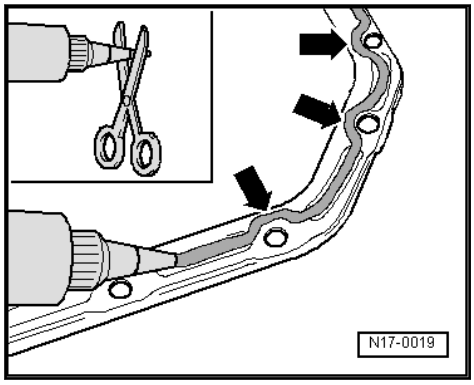

– Using applicator gun -VAS 6966-, apply silicone sealant to clean sealing surface of sump as shown in illustration.

Sealant bead must be:

- 2 to 3 mm thick
- Run bead along inner side of bolt holes -arrows-.

Note

The sealing compound bead cannot be thicker, or excessive sealing compound will enter the sump and may block the oil suction pipe strainer.

– Fit sump immediately and lightly tighten all sump securing bolts.

– Tighten new sump bolts.

Specified torque for gearbox bolts:

Note

Let sealing compound dry for approx. 30 minutes after installing oil sump. Only then fill with engine oil.

– Fill oil filter with engine oil and tighten it with oil filter tool -3417-.

– Replenish engine oil.

Engine oil capacity ⇒ o1.2 il:", page 176 .

– Install air conditioner compressor: ⇒ Heating, air conditioning; Rep. gr. 87; Air conditioner compressor; Removing and installing air conditioner compressor.

Install poly V-belt (only applies for vehicles equipped with air conditioning system) ⇒ a1.3 nd installing poly-V belt", page 38 .

Further assembly is basically a reverse of the dismantling sequence.

Torque settings

- Specified torques for gearbox bolts: ⇒ Rep. gr. 34; Removing and installing gearbox; Specified torques for gear box
- ⇒ o1.1 verview - sump/oil pump", page 172

1.4 Removing and installing oil pump

Removing

- Disconnect battery ⇒ Electrical system; Rep. gr. 27; Battery; Disconnecting and connecting battery.
- Remove alternator ⇒ Electrical system; Rep. gr. 27; Alternator; Removing and installing alternator.
- Take off toothed belt. ⇒ a2.2 nd installing toothed belt", page 87
- Remove sump ⇒ a1.3 nd installing sump", page 176 .
- Remove crankshaft oil seal on belt pulley end ⇒ c1.5 rankshaft oil seal - belt pulley end", page 43 .
- Unscrew securing bolts -arrows- and remove tensioning element.

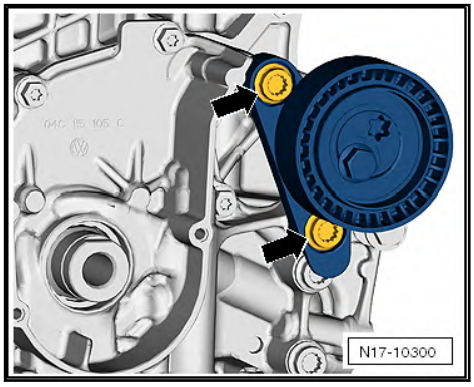

- Unscrew oil pump securing bolts -1- and -2-.

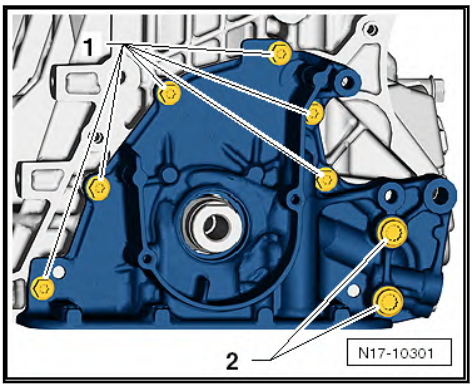

- Pull oil pump in a straight line off dowel pins on cylinder block.
- Remove gasket -1- from dowel pins -arrows-.

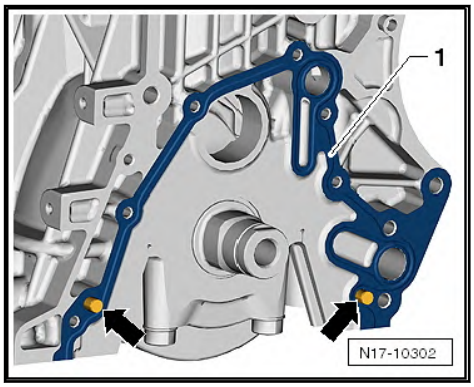

Installing

– Fit new gasket -1- onto dowel pins -arrows-.

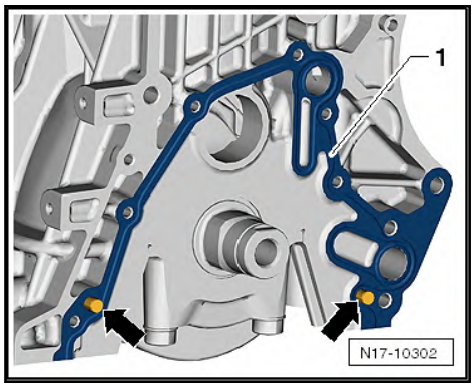

– Rotate oil pump gear to a position where 2 opposing notches -arrows- are aligned vertically.

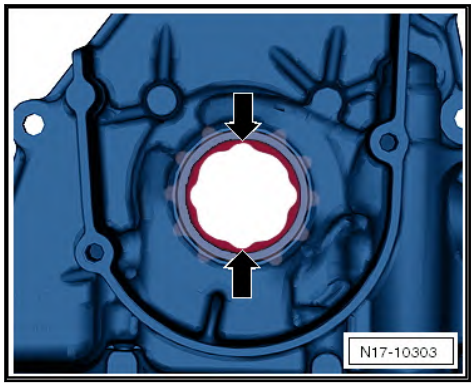

– Fit oil pump onto dowel pins.

– Tighten new securing bolts -1- to specified torque ⇒ page 183 .

– Tighten securing bolts -2- to specified torque ⇒ page 183 .

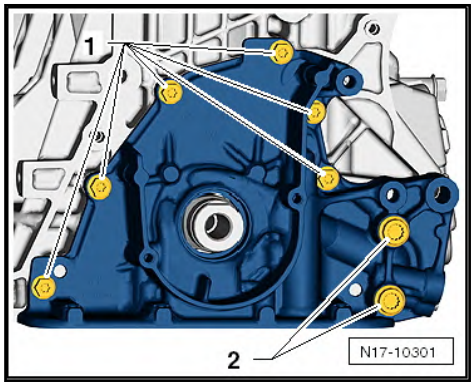

– Install new crankshaft oil seal on belt pulley end ⇒ page 43 .

– Fit tensioning element with new securing bolts -arrows-, and tighten securing bolts to specified torque ⇒ page 183 .

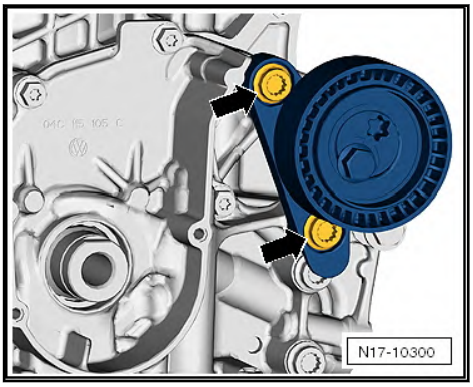

– Install sump ⇒ a1.3 nd installing sump", page 176 .
– Install toothed belt ⇒ a2.2 nd installing toothed belt", page 87 .
– Install alternator ⇒ Electrical system; Rep. gr. 27; Alternator; Removing and installing alternator.

Torque settings

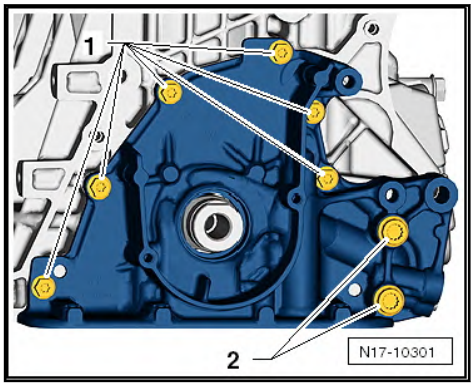

Component	Torque setting	Note	Qty.
Securing bolts for oil pump -1-	8 Nm +90°	Renew	Qty. 6
Securing bolts for oil pump -2-	20 Nm		Qty. 2
Securing bolts for tensioning elements	20 Nm +90°	Renew	Qty. 2

2 Crankcase ventilation

⇒ o2.1 verview - crankcase breather system", page 184

⇒ a2.2 nd installing oil separator", page 185

2.1 Assembly overview - crankcase breather system

1 - Oil separator

- ❑ Removing and installing ⇒ a2.2 nd installing oil separator", page 185
- ❑ Renew if damaged

2 - O-ring

- ❑ Renew after removal
- ❑ Moisten with oil before installing

3 - Hose

- ❑ For crankcase ventilation.

4 - Union

- ❑ Check for correct positioning

5 - Bolt

- ❑ Self-locking
- ❑ Renew after removal
- ❑ 9 Nm

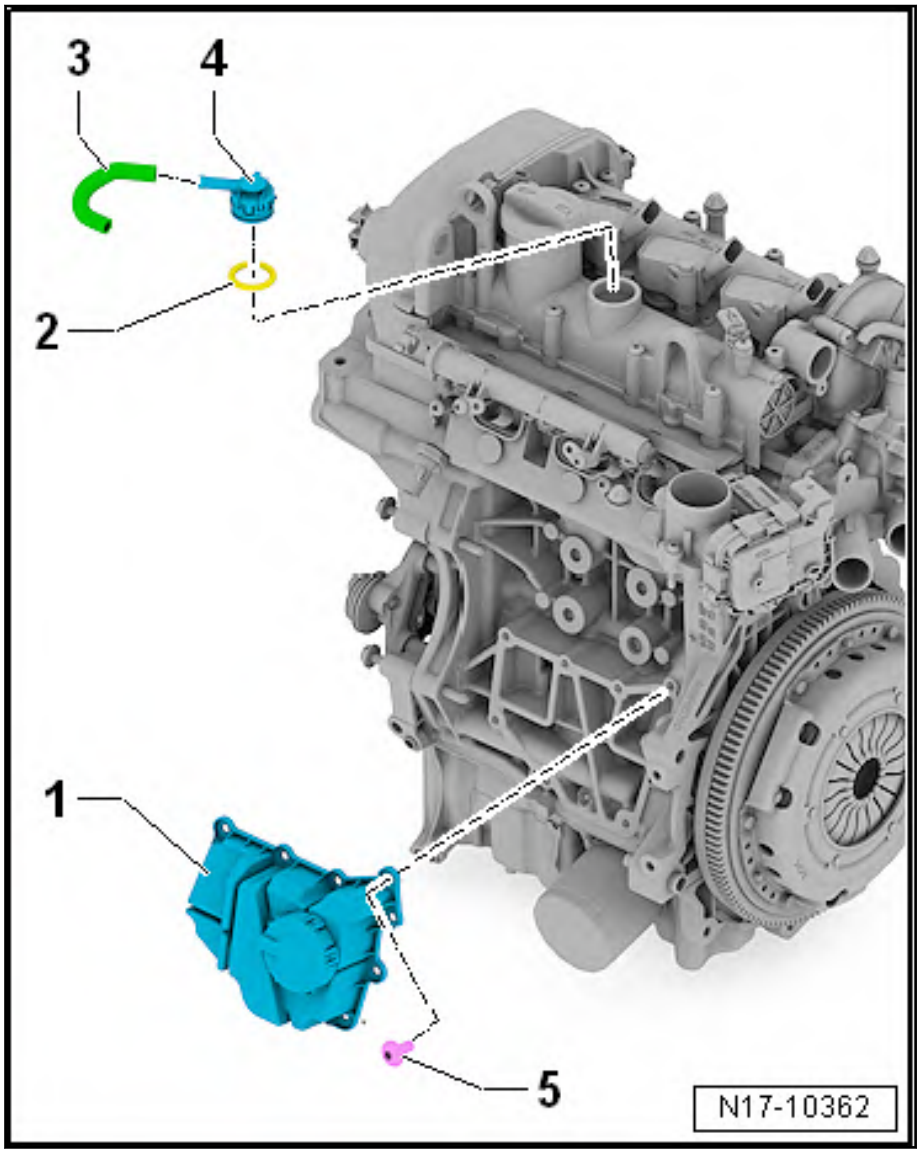

Oil separator - tightening torque and sequence

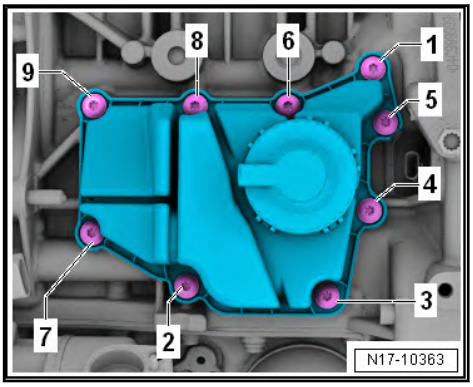

– Tighten bolts in the sequence -1 … 9-.

Bolt	Torque setting
-1 to 9-	9 Nm

2.2 Removing and installing oil separator

Special tools and workshop equipment required

- Commercially available sealant remover
- Applicator gun -VAS 6966-

- Sealant ⇒ Electronic Parts Catalogue

Removing

Note

The throttle valve module -GX3- need not be removed for this procedure!

– Remove intake manifold ⇒ a4.2 nd installing intake manifold", page 264 .

– Loosen and unscrew bolts in the sequence -9 to 1-.

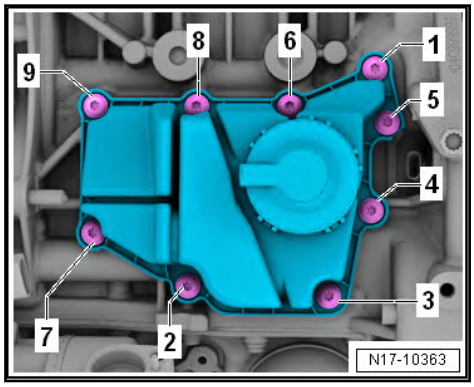

– Carefully release oil separator from bonded joint.

Installing

Install in reverse order of removal, observing the following:

Note

- *Avoid damage to sealing surfaces.*
- *Carefully remove sealant residue from cylinder head and cylinder block.*
- *Ensure that no long scores or scratches are made on the surfaces.*

– Thoroughly clean sealing surfaces on cylinder block and on oil separator using commercially available sealant remover.

– Remove any oil and grease from sealing surfaces.

– Screw 2 studs a few turns into holes -arrows-.

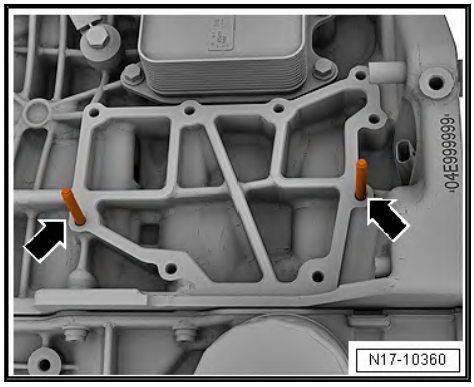

Note

Observe use-by-date of sealant.

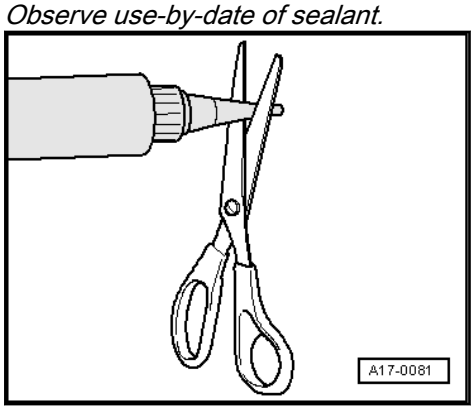

– Cut off nozzle on tube at front marking (∅ of nozzle approx. 1.5 mm).

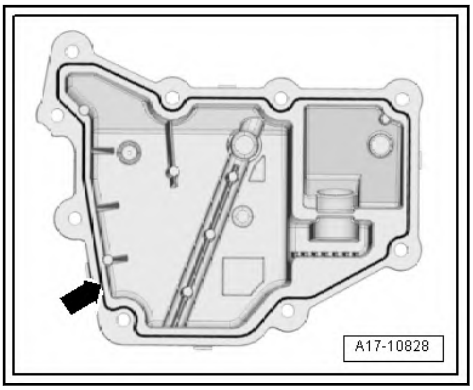

Note

- *Danger of blocking lubrication system with excess sealant.*
- *Do not apply sealant bead thicker than specified.*

– Apply bead of sealant -arrow- onto clean sealing surface of oil separator using applicator gun -VAS 6966- as illustrated.

- Width of sealant bead: 2 mm.

The oil separator must be installed within 5 minutes of sealant being applied.

– Fit oil separator onto studs, and position it on crankcase.

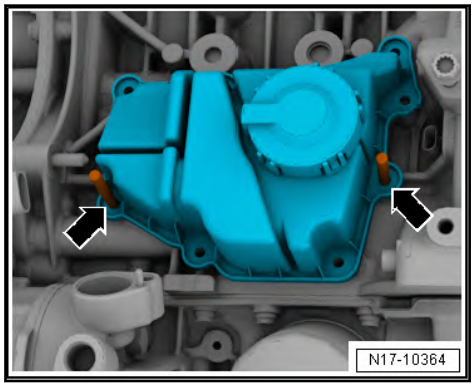

– Unscrew studs.

– Tighten bolts to specified torque observing specified tightening sequence. ⇒ page 184

Further installation is carried out in reverse order of removal, observing the following:

– Install intake manifold ⇒ a4.2 nd installing intake manifold", page 264 .

Torque settings

♦ Securing bolts for oil separator ⇒ page 184 .

♦ Securing bolts for intake manifold ⇒ a4.2 nd installing intake manifold", page 264

3 Oil filter, oil pressure switch

⇒ a3.1 nd installing oil pressure switchF1", page 189
⇒ o3.2 il pressure and oil pressure switch", page 190
⇒ a3.3 nd installing oil filter housing", page 192

3.1 Removing and installing oil pressure switch -F1-

Special tools and workshop equipment required

- Torque wrench -V.A.G 1331-

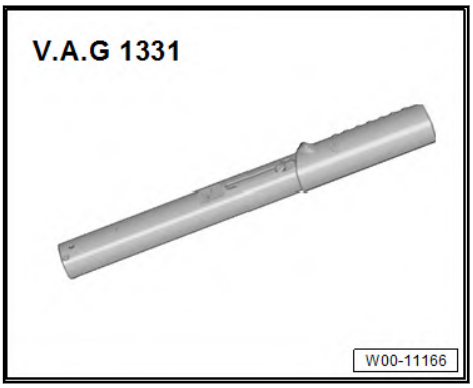

Removing

– Unplug connector -1-.

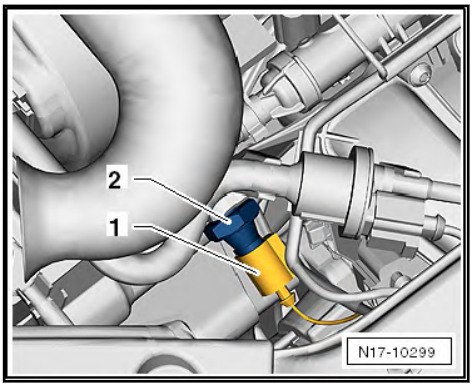

Note

- *Risk of damage caused by escaping engine oil.*
- *Cover alternator with a cloth.*
- *The oil pressure switch is fitted with a captive seal.*
- *The seal is not designed for repeated use.*

– Unscrew oil pressure switch -2- from cylinder head.

Installing

– Cut open the captive seal to renew it.
– Screw oil pressure switch -2- into cylinder head and tighten.
– Connect connector -1-.

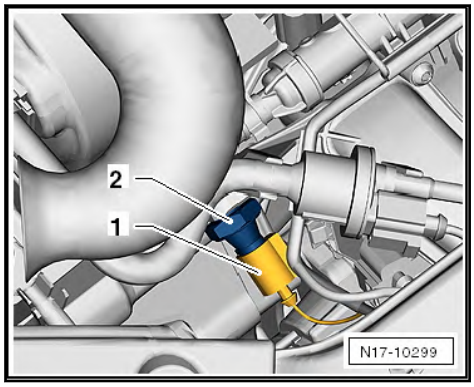

– Remove cloth from alternator.

Specified torque for oil pressure switch

♦ ⇒ page 172

3.2 Checking oil pressure and oil pressure switch

Special tools and workshop equipment required

♦ Oil pressure tester -V.A.G 1342-

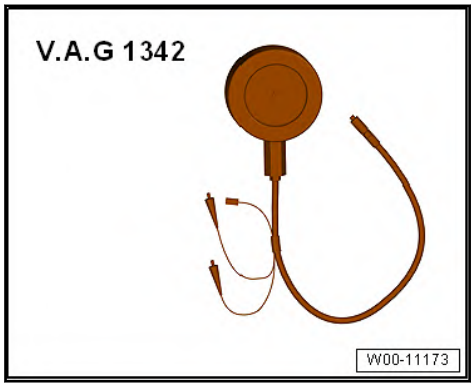

♦ Voltage tester -V.A.G 1527 B-

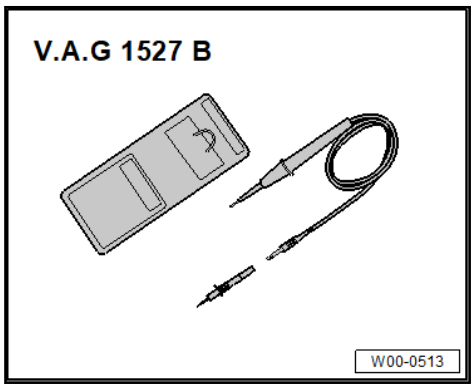

- Adapter set -V.A.G 1594C-

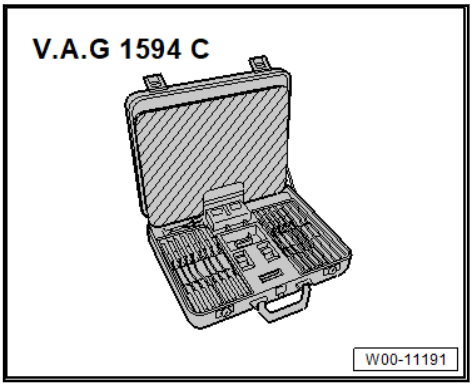

Note

Functional check and repair of the optical and acoustic oil pressure warning: ⇒ Current flow diagrams, Electrical fault finding and Fitting locations

Test sequence

Note

- *Risk of damage caused by escaping engine oil.*
- *Cover alternator with a cloth.*

– Unplug connector -1-.

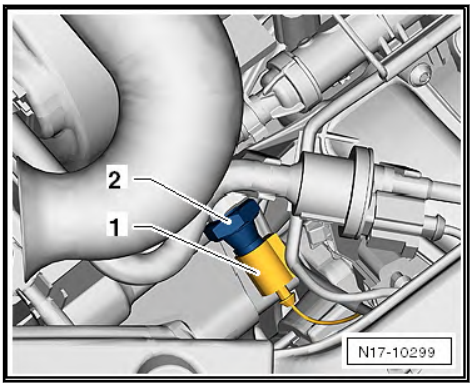

– Unscrew oil pressure switch -F1- -2- from cylinder head ⇒ page 189 .

Note

- *The oil pressure switch is fitted with a captive seal.*
- *The seal is not designed for repeated use.*

– Screw oil pressure switch -F1- into tester.

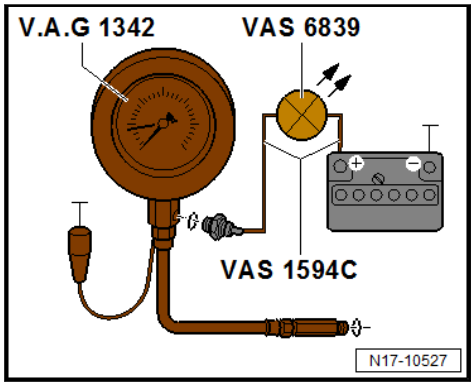

– Screw tester into cylinder head in place of oil pressure switch.
– Connect brown wire of tester to earth (-).
– Connect voltage tester -V.A.G 1527B- to battery positive (+) and oil pressure switch using cables from auxiliary measuring set -V.A.G 1594C-.
– Start engine and increase revolutions slowly. At 0.3… 0.6 bar, the LED must light up, otherwise the oil pressure switch must be renewed.
– Increase engine speed further. At 2,000 rpm and an oil temperature of 80°C; the oil pressure should be at least 2.0 bar.

At higher engine speeds, the oil pressure must not exceed 7.0 bar.

Installing:

– Cut open the captive seal to renew it.
– Install oil pressure switch -F1- ⇒ page 189 .

Torque settings

♦ Specified torque for oil pressure switch ⇒ page 190

3.3 Removing and installing oil filter housing

Special tools and workshop equipment required

♦ Oil filter tool -3417-

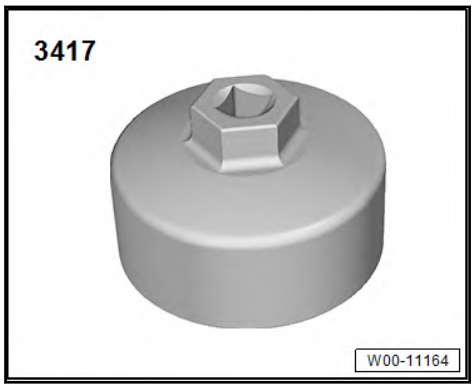

Removing

– Drain engine oil.
– Remove oil filter -arrow- with oil filter tool -3417-.

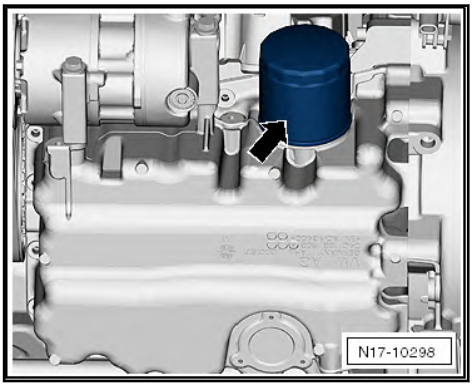

Installing

– Fill oil filter with engine oil and tighten it to specified torque using oil filter tool -3417- ⇒ page 193 .

• If connecting union -2- in sump -1- became loose, retighten it as described below ⇒ page 174 .

– Replenish engine oil.

Engine oil capacities ⇒ Maintenance; Booklet “Capacities and specifications”

Specified torque for oil filter

Component	Torque setting	Conditions
Oil filter	20 Nm	Coat gasket with engine oil.

19 – Cooling

1 Cooling system/coolant

⇒ d1.1 iagram - coolant hoses", page 194

⇒ c1.2 ooling system for leaks", page 194

⇒ a1.3 nd adding coolant", page 198

1.1 Connection diagram - coolant hoses

1 - Heat exchanger for heater

2 - Expansion tank

- ❑ Check for leaks ⇒ c1.2 ooling system for leaks", page 194 .

3 - Radiator/cooler

- ❑ Removing and installing ⇒ a3.2 nd installing radiator", page 234

4 - Intake manifold

- ❑ Removing and installing ⇒ a4.2 nd installing intake manifold", page 264

5 - Cylinder head and cylinder block

6 - Thermostat housing with coolant pump

- ❑ Removing and installing ⇒ a2.3 nd installing coolant pump ", page 212

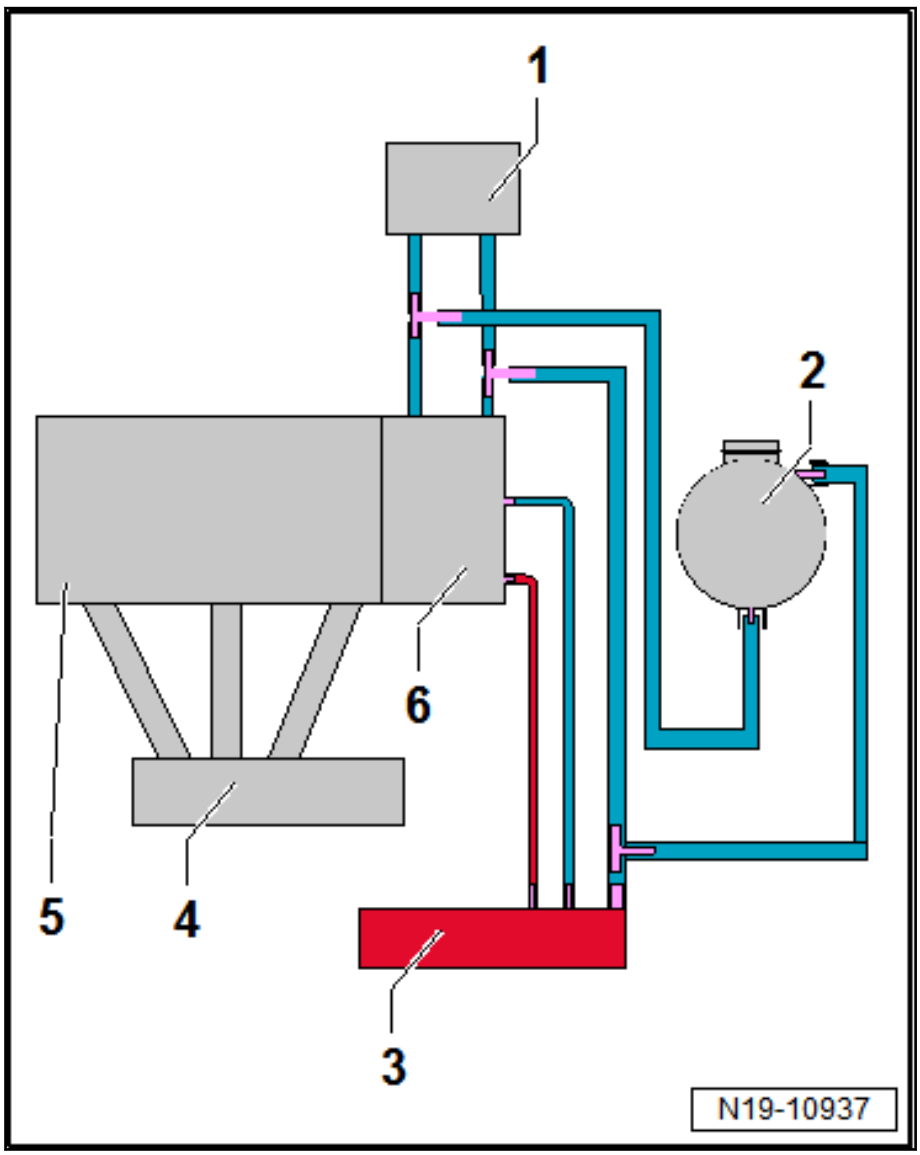

1.2 Checking cooling system for leaks

Special tools and workshop equipment required

- Cooling system tester -V.A.G 1274 B-

- Adapter for cooling system tester -V.A.G 1274/8-

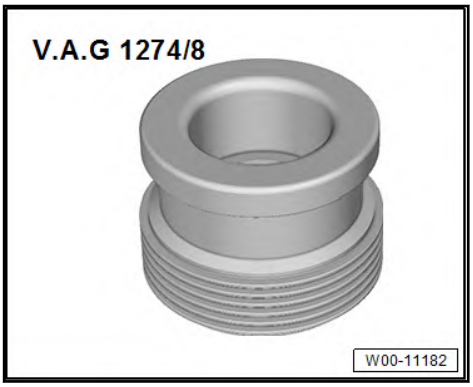

- Adapter for cooling system tester -V.A.G 1274/9-

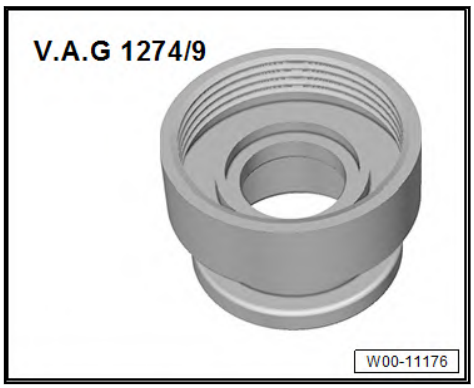

- Adapter for cooling system tester -V.A.G 1274/10-

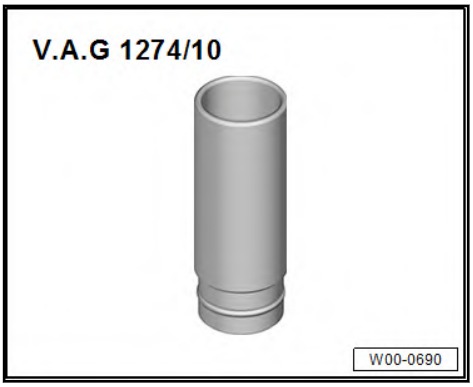

Prerequisites for check

- Engine at operating temperature.

Test sequence:

Self-test of cooling system tester -V.A.G 1274 B-

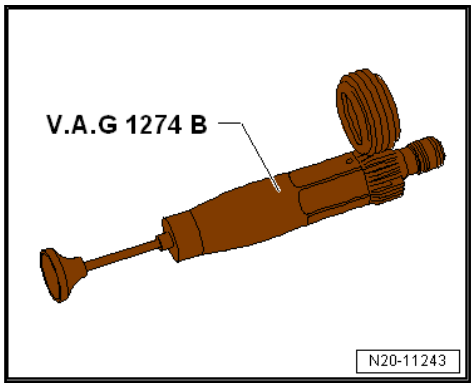

– Operate cooling system tester -V.A.G 1274 B- several times.
– Build up a pressure of 3.0 bar on cooling system tester.

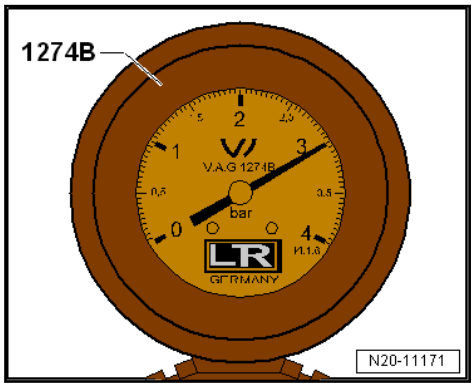

– Observe pressure on pressure gauge of cooling system tester for 30 seconds.

If no pressure builds up or if the pressure drops again:

The cooling system tester -V.A.G 1274 B- is leaking and should not be used.

Checking cooling system for leaks

CAUTION

The cooling system could be under pressure. Hot steam/hot coolant can escape - risk of scalding.

Skin and other parts of the body may be scalded.

- **Wear protective gloves.**
- **Wear protective goggles.**
- **Reduce excess pressure by covering cap of coolant expansion tank with suitable cloth and opening it carefully.**

– Open filler cap on coolant expansion tank.
– Screw adapter for cooling system tester -V.A.G 1274/8- into coolant expansion tank -1-.

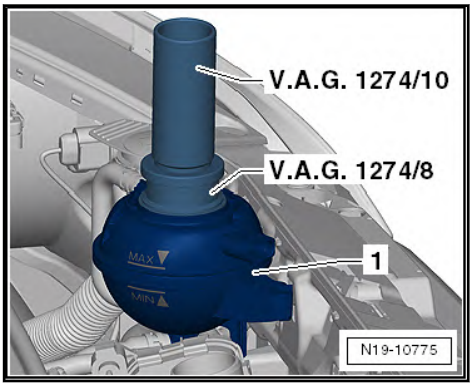

– Screw adapter for cooling system tester -V.A.G 1274/10- into adapter for cooling system tester -V.A.G 1274/8-.
– Clamp connector -V.A.G 1274 B/1- into adapter for cooling system tester -V.A.G 1274/10-.
– Connect connector -V.A.G 1274 B/1- to cooling system tester -V.A.G 1274 B- using supplied hose.
– Using hand pump of tester, build up a pressure of approx. 1.5 bar.
• The pressure must not drop by more than 0.2 bar within 10 minutes.
– If pressure drops by more than 0.2 bar, locate leaks and rectify faults.

Note

♦ *A pressure drop of 0.2 bar within 10 minutes is caused by the coolant cooling down.*
♦ *The colder the engine, the lower the pressure loss.*
♦ *If necessary, repeat the check while the engine is cold.*

CAUTION

Danger of scalding by steam and hot coolant.
Skin and other parts of the body may be scalded.
– **Relieve pressure: press pressure relief valve on cooling system tester until pressure gauge shows value “0”.**

Check pressure relief valve in cap.

Note

The cap may have a different shape depending on the model year.

– Screw cap -1- into adapter for cooling system tester -V.A.G 1274/9- -2-.

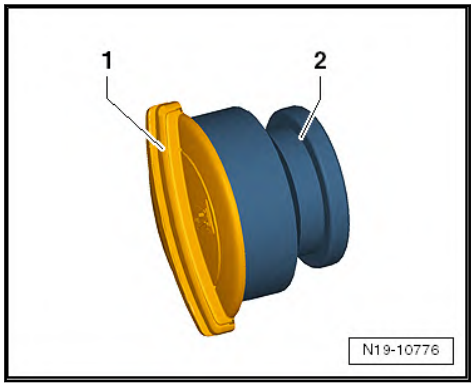

– Clamp connector -V.A.G 1274 B/1- into adapter for cooling system tester -V.A.G 1274/9-.
– Connect connector -V.A.G 1274 B/1- to cooling system tester -V.A.G 1274 B- using supplied hose.
– Build up pressure using hand pump of cooling system tester.

Blue cap

♦ The pressure relief valve must open at a pressure of 1.4 bar.

Black cap

♦ The pressure relief valve must open at a pressure of 1.6 to 1.8 bar.

If the pressure relief valve opens prematurely:

– Renew cap.

1.3 Draining and adding coolant

⇒ c1.3.1 oolant", page 198
⇒ w1.3.2 ith coolant", page 200

1.3.1 Draining coolant

Special tools and workshop equipment required

♦ Refractometer -T10007 A-

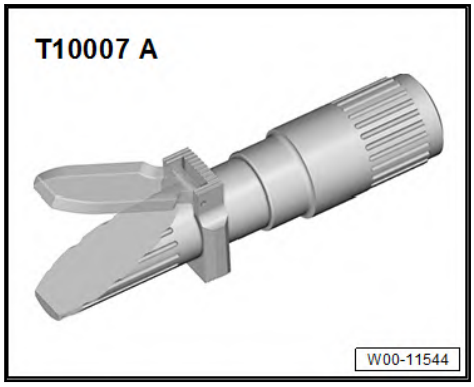

- Drip tray for workshop hoist -VAS 6208-

- Hose clamp pliers -VAS 6340-

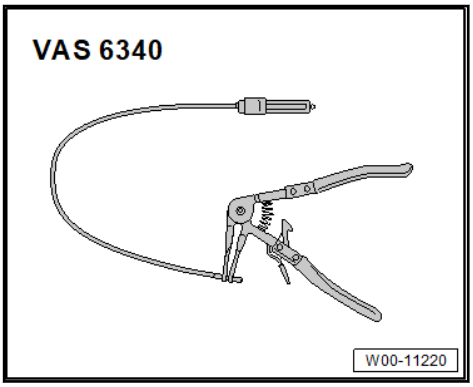

- Cooling system charge unit -VAS 6096-

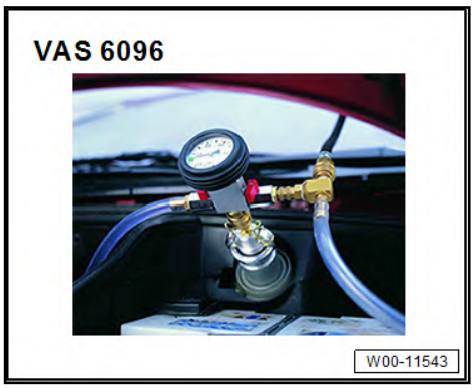

- Adapter for cooling system tester -V.A.G 1274/8-

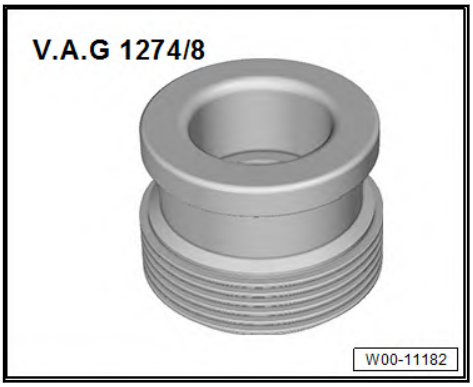

CAUTION

The cooling system could be under pressure. Hot steam/hot coolant can escape - risk of scalding.

Skin and other parts of the body may be scalded.

- **Wear protective gloves.**
- **Wear protective goggles.**
- **Reduce excess pressure by covering cap of coolant expansion tank with suitable cloth and opening it carefully.**

Note

The cap may have a different shape depending on the model year.

- Open filler cap on coolant expansion tank -1-.

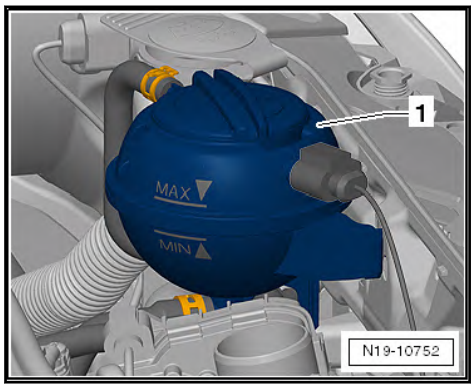

- Loosen hose clamp -arrow- and pull off coolant hose -1- from radiator ⇒ d1.1 iagram - coolant hoses", page 194 .

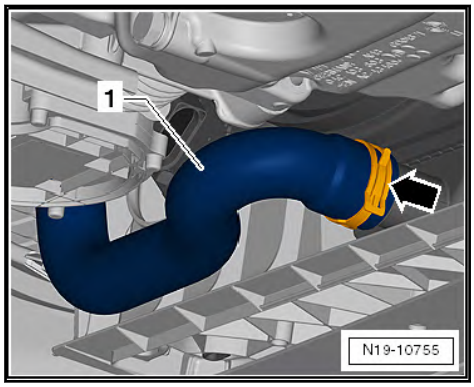

- Drain coolant.

Note

Please observe regulations for disposal!

1.3.2 Filling with coolant

Special tools and workshop equipment required

- Refractometer -T10007 A-

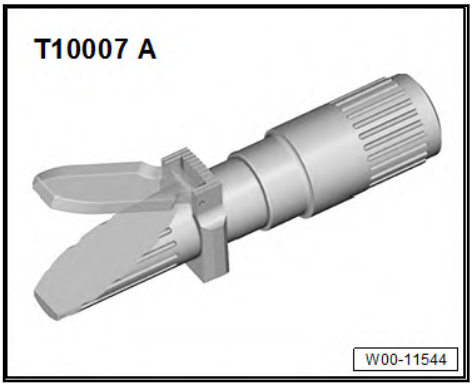

- Drip tray for workshop hoist -VAS 6208-

- Hose clamp pliers -VAS 6340-

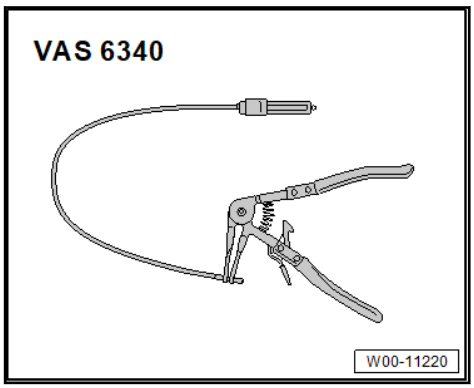

- Cooling system charge unit -VAS 6096-

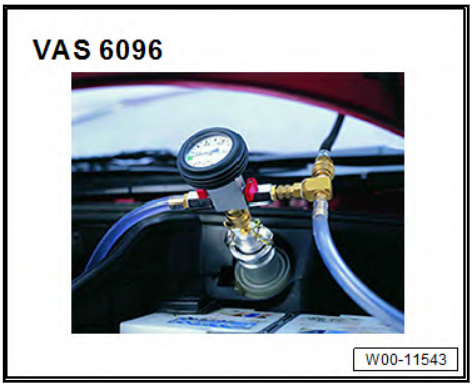

- Adapter for cooling system tester -V.A.G 1274/8-

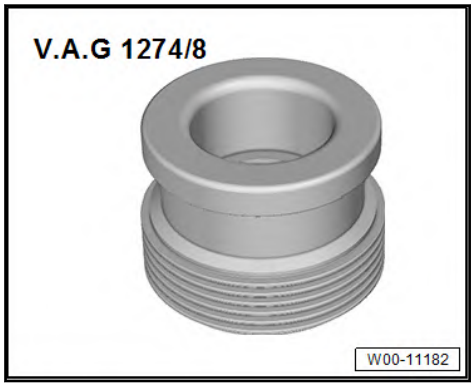

Note

- *The water used for mixing has a major influence on the effectiveness of the coolant. Because the water quality differs from country to country and even from region to region, the quality of the water to be used in the cooling system has been specified by Volkswagen. Distilled water satisfies all requirements. Therefore, only ever use distilled water when mixing coolant for topping up or renewing coolant.*
- *Use only coolant additives as per ⇒ Electronic parts catalogue (ETKA). Other coolant additives may reduce corrosion protection substantially. The resulting damage could lead to loss of coolant and subsequent severe damage to the engine.*
- *Mixed in the proper proportions, coolant inhibits frost and corrosion damage as well as scaling. Additives also raise the boiling point of the coolant. Therefore, the cooling system must be filled all year round with coolant additive.*
- *Because of its high boiling point, coolant improves engine reliability under heavy loads, particularly in countries with tropical climates.*
- *The refractometer -T10007A- or refractometer -T10007B- must be used to determine the current anti-freeze value.*

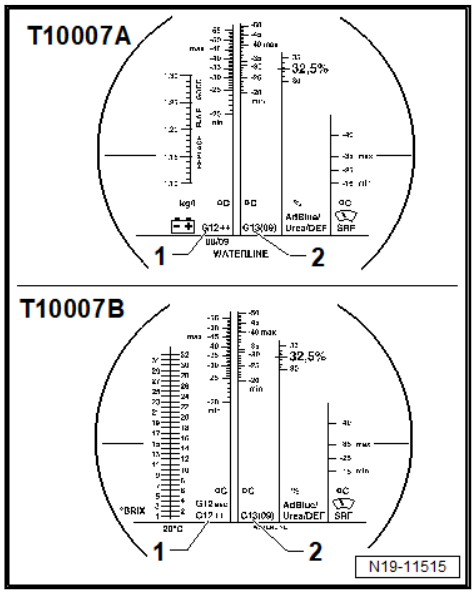

- *The scale -1- of the refractometer is calibrated for the coolant additives G12++ and G12evo.*
- *The scale -2- of the refractometer is calibrated for the coolant additive G13.*
- *If it is not possible to ensure that the same type of coolant additive is filled: always determine anti-freeze protection using the scale for G13.*
- *Anti-freeze protection must be guaranteed down to -25°C as a minimum and, in countries with arctic conditions, down to approx. -36°C. Increasing the anti-freeze protection is permissible only if climatic conditions require stronger anti-freeze protection. It may, however, be increased only to a maximum of -48°C. Otherwise, the cooling effect will be impaired.*
- *Do not reduce the coolant concentration by adding water even in warmer seasons and in warmer countries. An-*

ti-freeze protection must be guaranteed down to at least -25°C.

- *The temperature reading on the refractometer corresponds to the »ice flocculation point«. Flakes of ice may start forming in the coolant below this temperature.*
- *Never reuse old coolant.*
- *Use only a water/coolant additive mixture as a slip agent for coolant hoses.*

Recommended mixing ratios (use only distilled water for mixing):

Frost protection to	Coolant additive
-25°C	40%
-36°C	50%

1) The quantity of coolant can vary depending on the vehicle equipment.

– Connect coolant hose -1- and secure with hose clamp -arrow-.

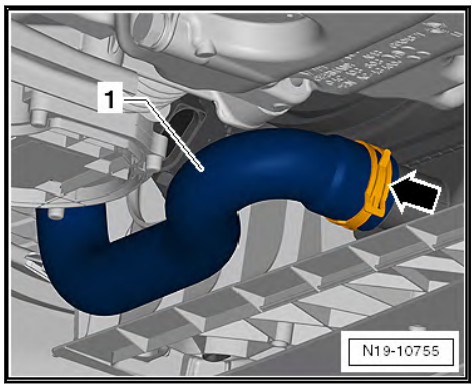

– Screw adapter for cooling system tester -V.A.G 1274/8- onto expansion tank.
– Fill coolant circuit using cooling system charge unit -VAS 6096- ⇒ Operating instructions for cooling system charge unit VAS 6096.
– Fill with coolant up to max. mark on expansion tank.

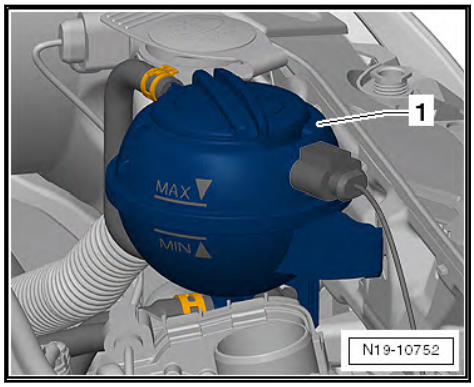

– Fit cooling system tester -V.A.G 1274 B- onto coolant expansion tank, and apply pressure of 1.5 bar to cooling system ⇒ page 194 .
– Fill with coolant up to edge -arrow- on expansion tank.

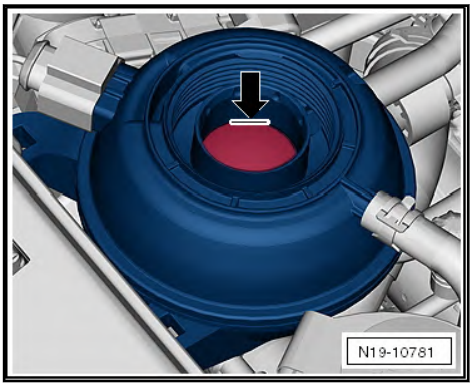

– Fit expansion tank cap.
– If fitted, switch off air conditioning system.
– Switch off heater controls.
– Start engine and let it warm up.
– Run engine at approx. 3,800 rpm until radiator fan cuts in.
– Once fan cuts in, run engine for a further 5 minutes at approx. 3,800 rpm.
– Switch off the engine.

CAUTION

The cooling system could be under pressure. Hot steam/hot coolant can escape - risk of scalding.

Skin and other parts of the body may be scalded.

– **Wear protective gloves.**
– **Wear protective goggles.**
– **Reduce excess pressure by covering cap of coolant expansion tank with suitable cloth and opening it carefully.**

– Check coolant level and top up as needed.

- When the engine is at operating temperature, it is permissible that the coolant level is at the “max. mark” or above.
- Coolant level must be between “min. mark” and “max. mark” when engine is cold.

2 Coolant pump, regulation of cooling system

2.1 Assembly overview - coolant pump

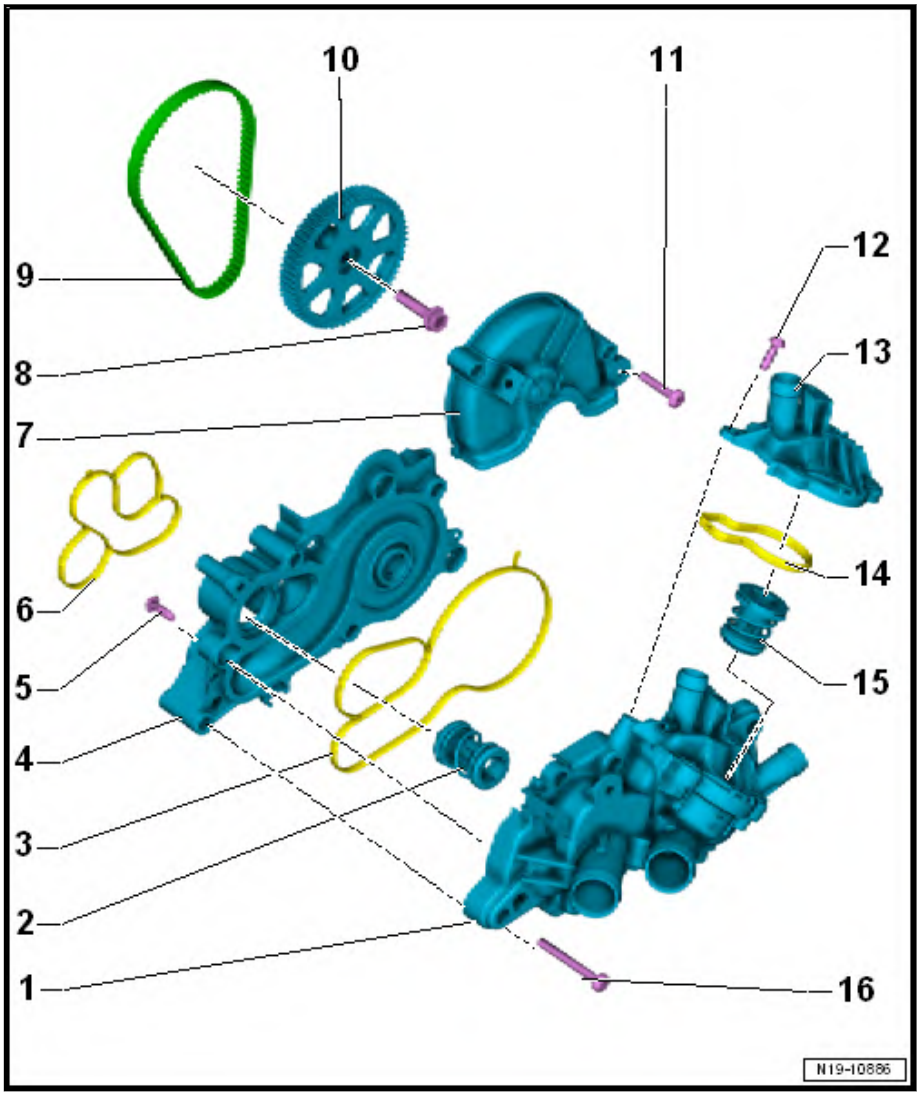

1 - Thermostat housing

- ❑ Removing and installing ⇒ a2.4.1 nd installing thermostat for cylinder block coolant circuit", page 217
- ❑ Observe tightening sequence when tightening to coolant pump ⇒ page 209 .

2 - Thermostat

- ❑ Removing and installing ⇒ a2.4.1 nd installing thermostat for cylinder block coolant circuit", page 217

3 - Seal

- ❑ Renew after removal
- ❑ Observe proper seating of gasket ⇒ page 208 .
- ❑ Lightly coat with coolant before installing.

4 - Coolant pump

- ❑ Removing and installing ⇒ a2.3 nd installing coolant pump ", page 212

5 - Bolt

- ❑ Thread-cutting
- ❑ Fit and screw in bolt by hand to ensure it is screwed into old thread. Then tighten bolt to specified torque.
- ❑ Specified torque and tightening sequence ⇒ page 209

6 - Seal

- ❑ Renew after removal

7 - Toothed belt guard

- ❑ For toothed belt for coolant pump

8 - Bolt

- ❑ Renew
- ❑ 20 Nm +90° further

9 - Toothed belt

- ❑ Renew
- ❑ For coolant pump drive
- ❑ Removing and installing ⇒ a2.5 nd installing toothed belt for coolant pump", page 223

10 - Camshaft sprocket

- ❑ For coolant pump drive

Note

- ♦ *Before removing, set No. 1 cylinder to TDC.*

- *Mark position of camshaft pulley relative to camshaft housing before removing ⇒ a3.5 nd installing camshaft oil seal", page 150 .*

11 - Bolt

- ❑ 8 Nm

12 - Bolt

- ❑ Thread-cutting
- ❑ Fit and screw in bolt by hand to ensure it is screwed into old thread. Then tighten bolt to specified torque.
- ❑ Specified torque and tightening sequence ⇒ page 209

13 - Cover

- ❑ For thermostat

14 - Seal

- ❑ Renew after removal

15 - Thermostat

- ❑ For main coolant circuit (radiator)
- ❑ Version I: commencement of opening approx. 87°C
- ❑ Version II: commencement of opening approx. 97°C
- ❑ Removing and installing ⇒ a2.4 nd installing thermostat", page 217
- ❑ Fitting position ⇒ page 208

16 - Bolts

- ❑ 12 Nm
- ❑ Observe tightening sequence ⇒ a2.3 nd installing coolant pump ", page 212

Installation position of thermostat for large cooling circuit

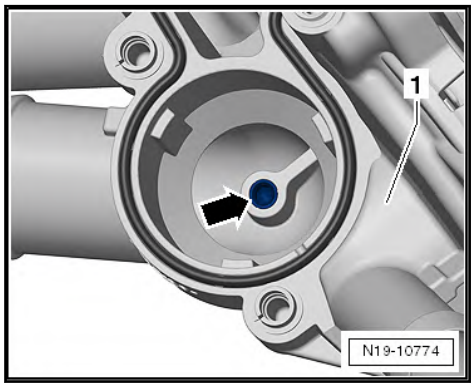

- Must be positioned with centring pin in guide -arrow- in thermostat housing.

Installation position of gaskets

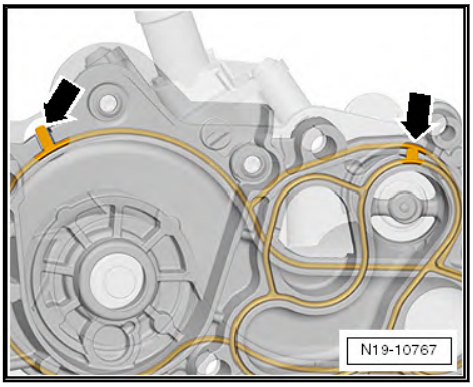

– Ensure proper seating -arrows-.

Tightening sequence for tightening thermostat housing to coolant pump

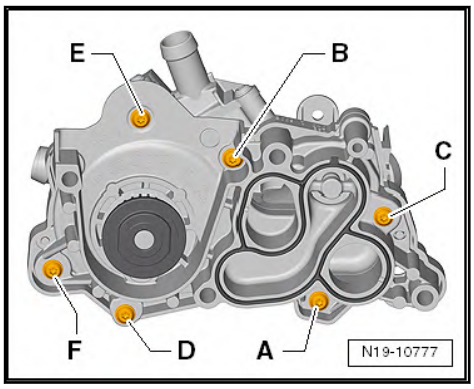

– Tighten securing bolts -A- through -F- in sequence given.

Cover for thermostat to thermostat housing - specified torque

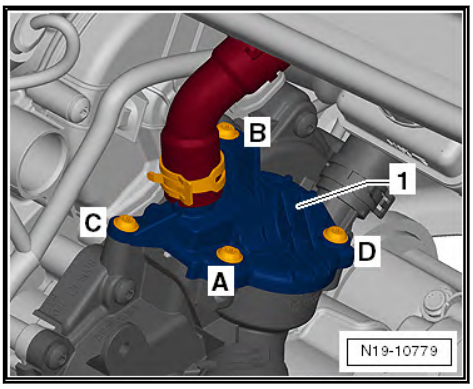

– Tighten bolts for cap -1- in sequence -A … D- to 7 Nm.

2.2 Assembly overview - thermostat

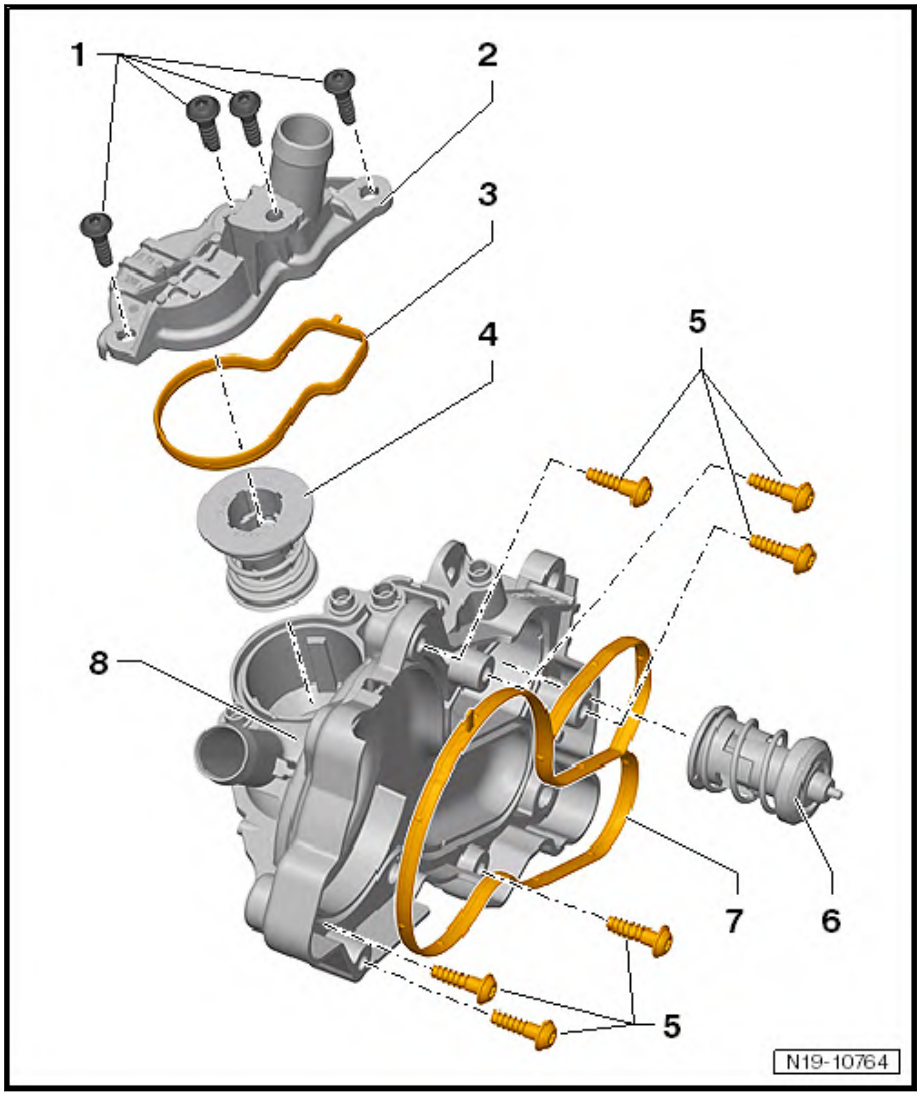

1 - Bolt

- ❑ Observe tightening sequence ⇒ page 211
- ❑ 7 Nm

2 - Thermostat cover

3 - Seal

- ❑ Ensure proper seating
- ❑ Renew after removal

4 - Thermostat

- ❑ For main coolant circuit (radiator)
- ❑ Opening begins at approx. 80°C
- ❑ Removing and installing ⇒ a2.4.2 nd installing thermostat for main coolant circuit (radiator)", page 220
- ❑ Note installation position ⇒ page 211

5 - Bolt

- ❑ For installing thermostat housing to coolant pump
- ❑ Observe tightening sequence ⇒ page 210
- ❑ 8 Nm

6 - Thermostat

- ❑ For cylinder block coolant circuit
- ❑ Opening begins at approx. 105°C
- ❑ Removing and installing ⇒ a2.4.1 nd installing thermostat for cylinder block coolant circuit", page 217
- ❑ Note installation position ⇒ page 211

7 - Seal

- ❑ Renew after removal
- ❑ Check for proper seating ⇒ page 211
- ❑ Clean sealing surface thoroughly.

8 - Thermostat housing

- ❑ Removing and installing ⇒ a2.4.1 nd installing thermostat for cylinder block coolant circuit", page 217

Tightening sequence for tightening thermostat housing to coolant pump

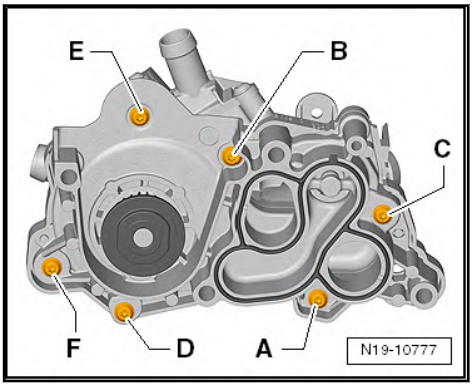

– Tighten securing bolts -A- through -F- in sequence given.

Tightening sequence for tightening thermostat cover to thermostat housing

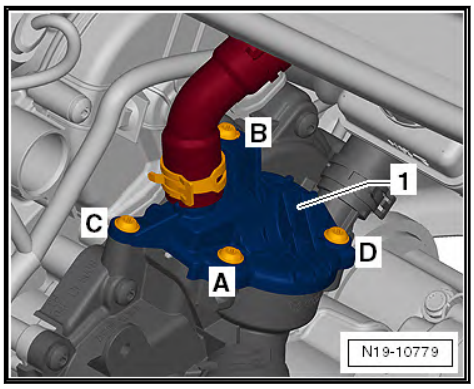

– Tighten securing bolts -A- through -D- in sequence given.

Installation position of gaskets

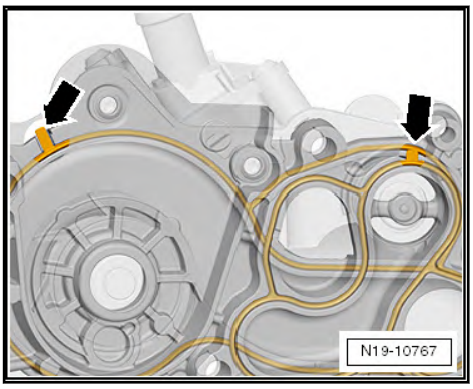

– Ensure proper seating -arrows-.

Installation position of thermostat

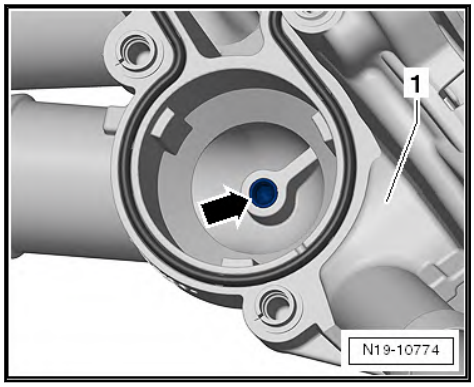

– Centring pin of thermostat must be fitted into guide -arrow-.

2.3 Removing and installing coolant pump

Special tools and workshop equipment required

♦ Refractometer -T10007 A-

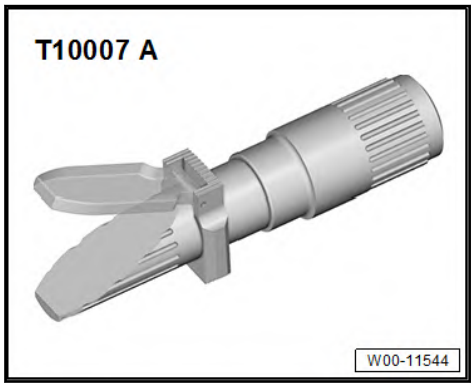

♦ Drip tray for workshop hoist -VAS 6208-

♦ Hose clamp pliers -VAS 6340-

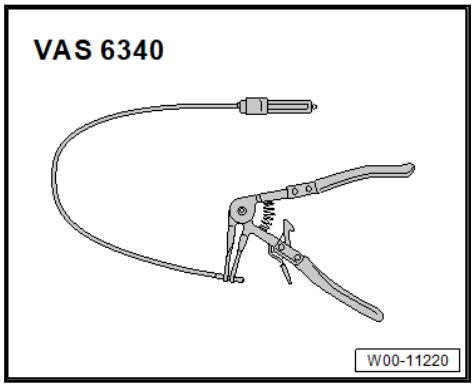

♦ Cooling system charge unit -VAS 6096-

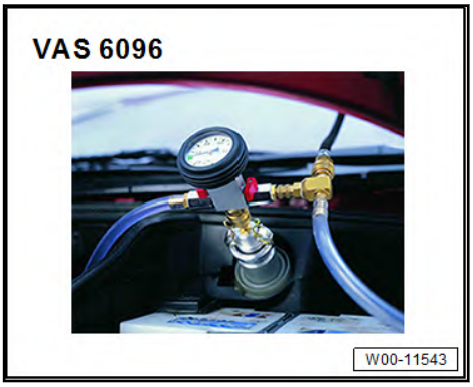

♦ Adapter for cooling system tester -V.A.G 1274/8-

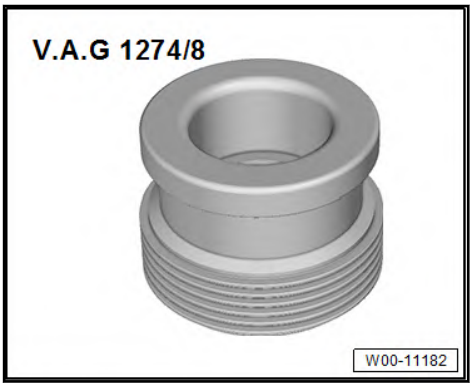

Removing

– Drain coolant ⇒ a1.3 nd adding coolant", page 198 .

– Pull hose -1- off air filter housing.

– Pull air filter housing upwards off studs at positions -2- and -3-.

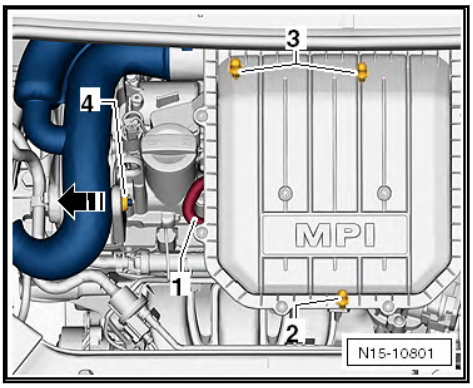

– Push air filter housing and intake connecting pipe in -direction of arrow- out of mounting -4-.

– Remove air filter housing from engine compartment.

– Unscrew securing bolts -arrows- of cover -1-.

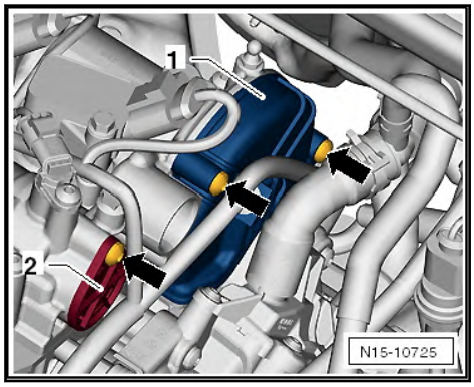

– Unclip line guide from cover.
– Detach cover -1-.
– Disconnect all coolant hoses -1- from coolant pump.

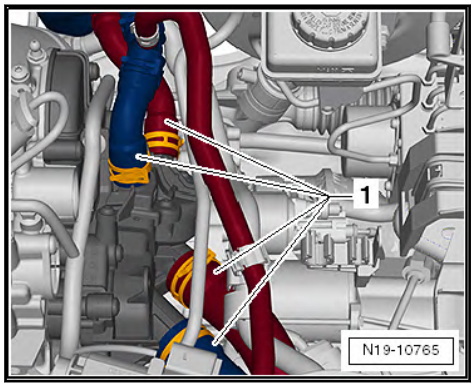

– Remove retaining ring -arrow- of gear selector cable.

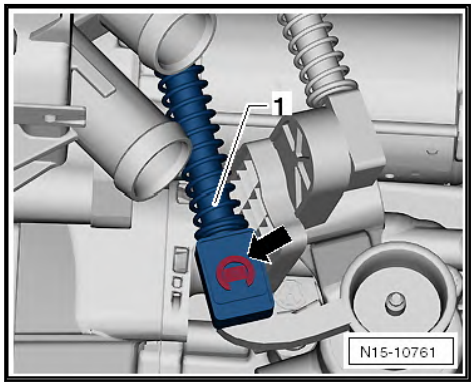

– Remove gear selector cable -1- from selector lever and lay to side.
– Unscrew securing bolts -1- through -5- of coolant pump in sequence given.

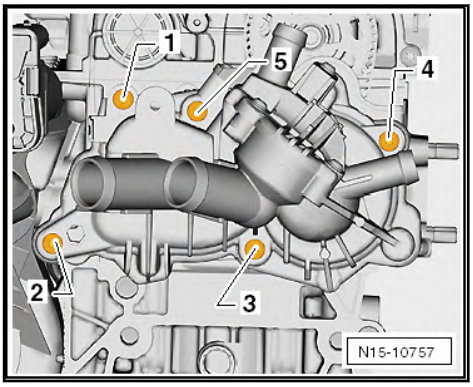

– Remove coolant pump and thermostat housing.

If the coolant pump is to be renewed:

– Remove thermostat housing ⇒ a2.4.1 nd installing thermostat for cylinder block coolant circuit", page 217 .

Installing

Install in reverse order of removal. When doing this, observe the following:

- The housing gasket -arrow- must always be renewed.

– If coolant pump has been renewed, install thermostat housing ⇒ a2.4.1 nd installing thermostat for cylinder block coolant circuit", page 217 .

– Ensure proper seating of gaskets -arrows-.

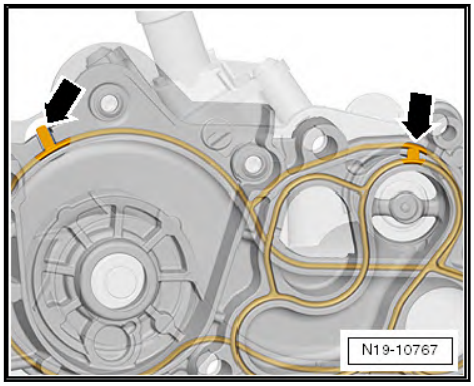

– Moisten gasket with coolant.

Note

♦ *Risk of premature wear of toothed belt or coolant pump.*

♦ *Always adhere to the sequence of work steps given below when installing the coolant pump.*

♦ *This ensures that the toothed belt is correctly tensioned.*

♦ *The following work steps must be carried out with the aid of a 2nd mechanic.*

- Always renew the toothed belts in conjunction with the fitting of a new coolant pump.

– Set cylinder no. 1 to "TDC" position ⇒ p4.4 iston to TDC position", page 66 .

– Fit toothed belt centrally onto camshaft pulley and coolant pump toothed belt pulley.
– Mount coolant pump on cylinder head with securing bolts.
– First tighten securing bolts in sequence -1- to -5- to 10 Nm.
– Then, loosen all bolts by 360°.

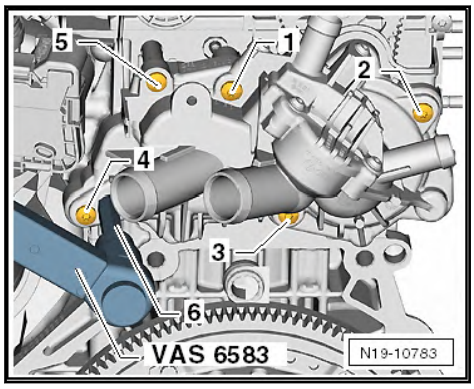

– Using hexagon on coolant pump, preload coolant pump in clockwise direction to 30 Nm using 10 mm hexagon socket, item -6-, extension and torque wrench -VAS 6583-.
– For ease of use, fit torque wrench -VAS 6583- on vertically.

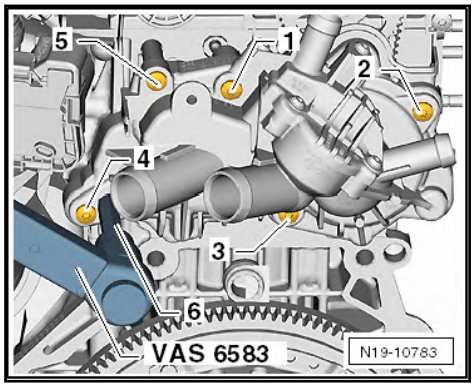

– Constantly keep torque wrench -VAS 6583- pushed to that torque. The torque wrench may not be supported by the other hand when doing this.

• To ensure the V-belt is not over tensioned, do not “over tension” the torque wrench -VAS 6583-.
• Have a second mechanic tighten securing bolts -2-, -1- and -5- to specified torque, while holding the torque wrench -VAS 6583- to the specified torque.

– Tighten securing bolts -2-, -1- and -5- to 10 Nm
– Tighten securing bolts, in sequence, -3-, -4-, -5-, -1- and -2- to 12 Nm.
– Install gearbox selector mechanism ⇒ Rep. gr. 34; Selector mechanism.
– Add coolant ⇒ a1.3 nd adding coolant”, page 198 .
– Install air filter housing ⇒ a3.2 nd installing air filter housing”, page 260 .

Torque settings

Component	Torque setting
Thermostat housing to coolant pump	8 Nm

Component	Torque setting
Coolant pump	12 Nm
Toothed belt guard	8 Nm

2.4 Removing and installing thermostat

⇒ a2.4.1 nd installing thermostat for cylinder block coolant circuit", page 217

⇒ a2.4.2 nd installing thermostat for main coolant circuit (radiator)", page 220

2.4.1 Removing and installing thermostat for cylinder block coolant circuit

Special tools and workshop equipment required

- Refractometer -T10007 A-

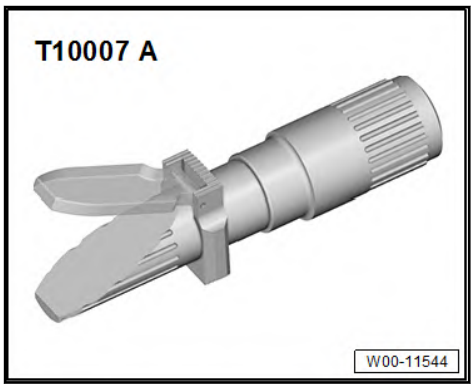

- Drip tray for workshop hoist -VAS 6208-

- Hose clamp pliers -VAS 6340-

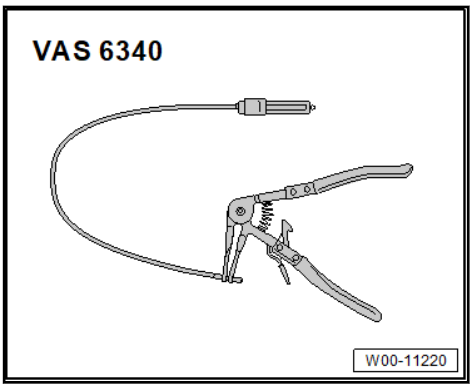

♦ Cooling system charge unit -VAS 6096-

♦ Adapter for cooling system tester -V.A.G 1274/8-

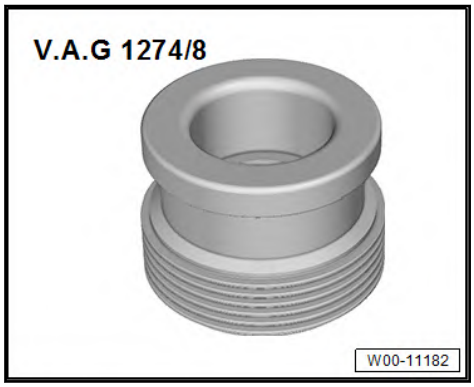

Removing

– Drain coolant ⇒ c1.3.1 oolant", page 198 .

– Remove coolant pump -1- ⇒ a2.3 nd installing coolant pump ", page 212 .

– Unscrew bolts -arrows-.

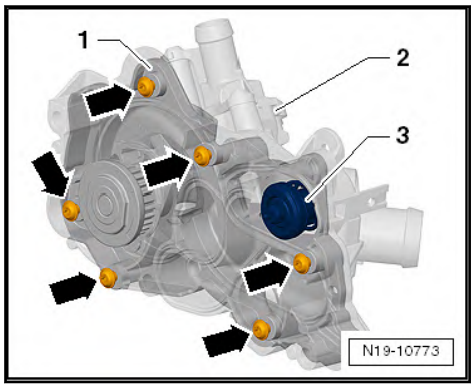

– Remove coolant pump -1- from thermostat housing -2-.

– Remove thermostat -3-.

Installing

Install in the reverse order of removal, observing the following:

– Fit thermostat to coolant pump.

– Centring pin of thermostat must be fitted into guide on coolant pump.

– Ensure proper seating of gaskets -arrows-.

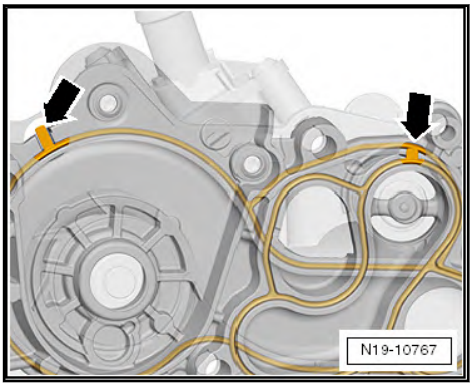

– Moisten gasket with coolant.
– Fit thermostat housing to coolant pump.

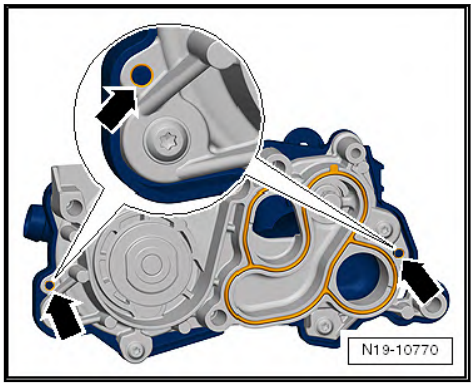

– Ensure proper seating of thermostat studs in guides -arrows- of coolant pump.

Note

If the guide pins have broken off, it is necessary to renew the coolant pump.

– Thread and tighten securing bolts -A- through -F- in sequence given.

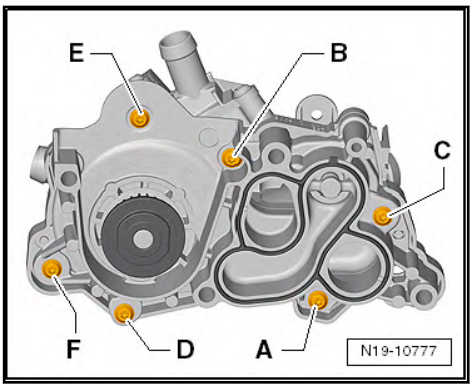

– Install coolant pump -1- ⇒ a2.3 nd installing coolant pump ", page 212 .
– Install selector mechanism to gearbox: ⇒ Rep. gr. 34; Selector mechanism; Overview - selector mechanism.
– Add coolant ⇒ a1.3 nd adding coolant", page 198 .

– Install air filter housing ⇒ a3.2 nd installing air filter housing", page 260 .

Torque settings

Component	Torque setting
Thermostat housing to coolant pump	8 Nm
Coolant pump	12 Nm, observing tightening sequence ⇒ a2.3 nd installing coolant pump ", page 212

2.4.2 Removing and installing thermostat for main coolant circuit (radiator)

Special tools and workshop equipment required

♦ Refractometer -T10007 A-

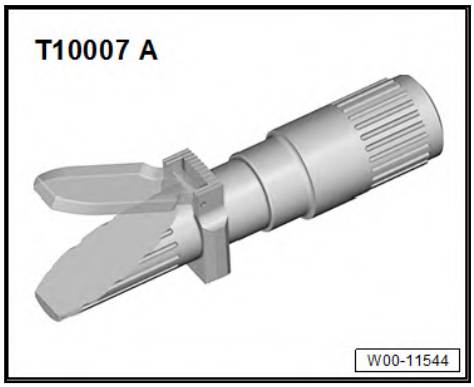

♦ Drip tray for workshop hoist -VAS 6208-

♦ Hose clamp pliers -VAS 6340-

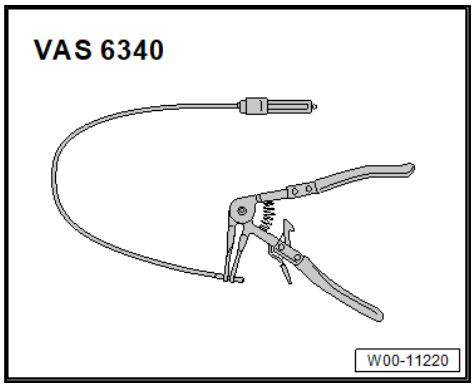

♦ Cooling system charge unit -VAS 6096-

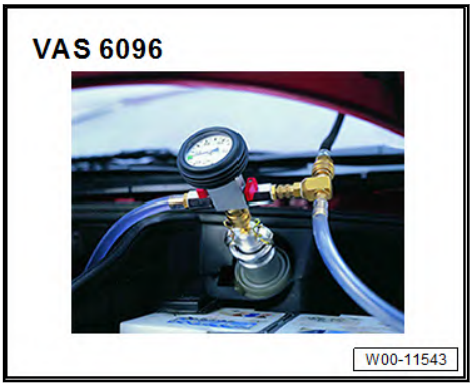

♦ Adapter for cooling system tester -V.A.G 1274/8-

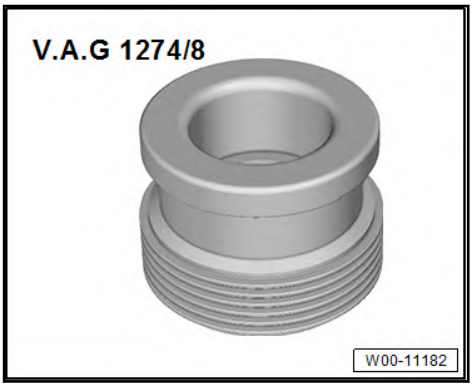

Removing

– Drain coolant ⇒ a1.3 nd adding coolant", page 198 .

– Pull hose -1- off air filter housing.

– Pull air filter housing upwards off studs at positions -2- and -3-.

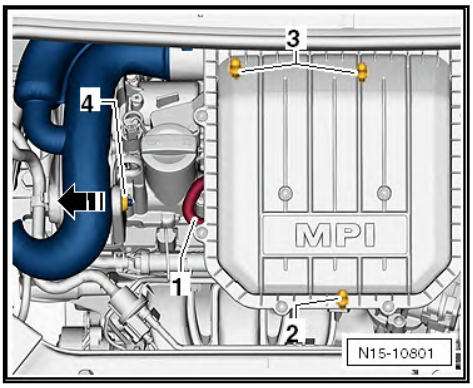

– Push air filter housing and intake connecting pipe in -direction of arrow- out of mounting -4-.

– Remove air filter housing from engine compartment.

– Loosen clamp -4- and disconnect hose -3-.

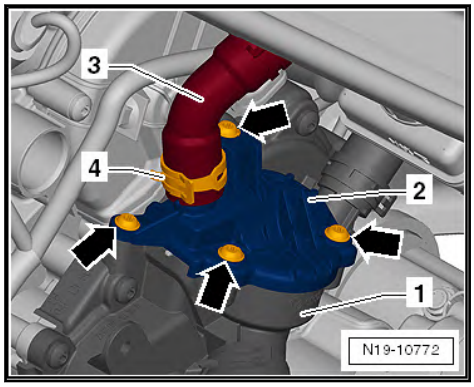

– Unscrew bolts -arrows-.
– Remove cover -2-.
– Remove thermostat using special wrench -T10508-.

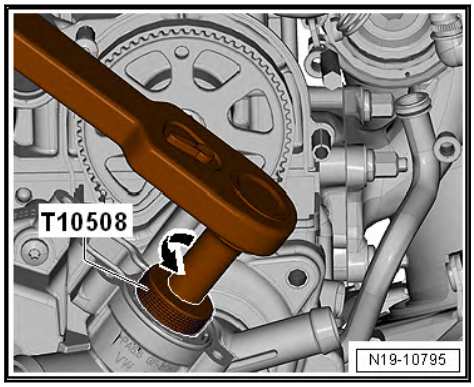

– Slightly push down special wrench -T10508- and turn it in -direction of arrow- while doing so.

Installing

Install in the reverse order of removal, observing the following:

– Centring pin of thermostat must accurately be fitted into guide -arrow- on thermostat housing -1-.

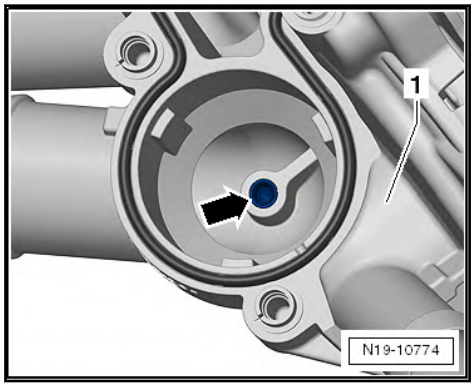

– Install thermostat using special wrench -T10508-.

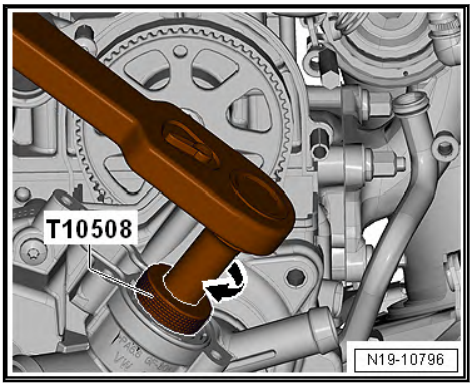

- Slightly push down special wrench -T10508- and turn it to stop in -direction of arrow- while doing so.
- Ensure proper seating of gasket.
- Moisten gasket with coolant.
- Fit cover -1- on thermostat housing.

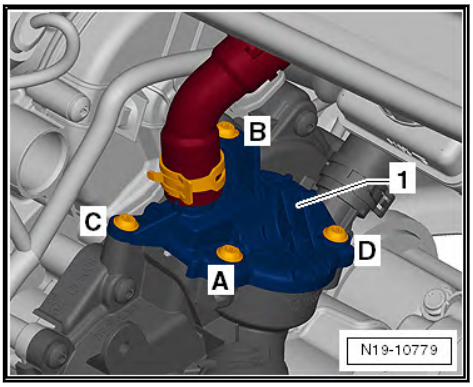

- Thread and tighten securing bolts -A- through -D- in sequence given.
- Add coolant ⇒ a1.3 nd adding coolant", page 198 .
- Install air filter housing ⇒ a3.2 nd installing air filter housing", page 260 .

Torque settings

Component	Torque setting
Cover on thermostat housing	7 Nm

2.5 Removing and installing toothed belt for coolant pump

Special tools and workshop equipment required

- Refractometer -T10007 A-

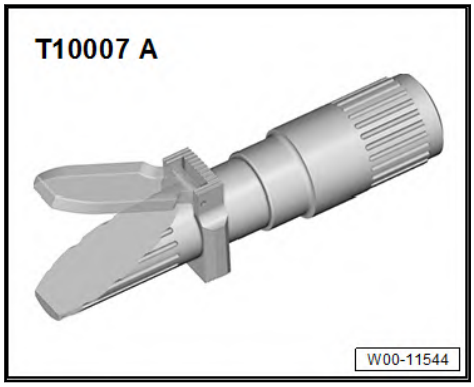

- Drip tray for workshop hoist -VAS 6208-

- Hose clamp pliers -VAS 6340-

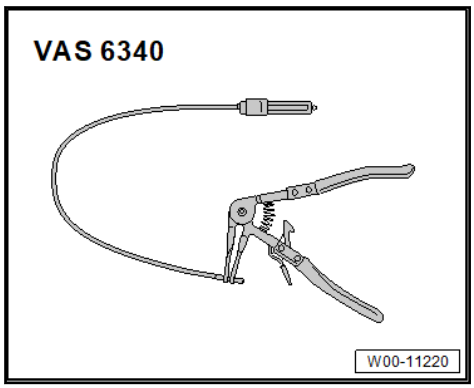

- Cooling system charge unit -VAS 6096-

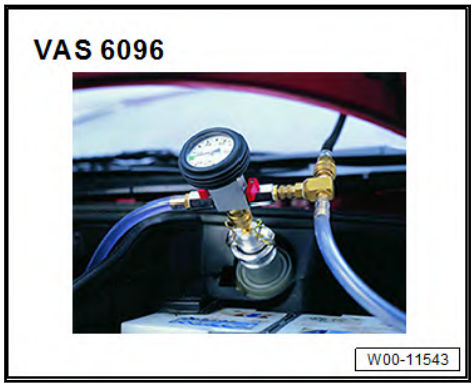

- Adapter for cooling system tester -V.A.G 1274/8-

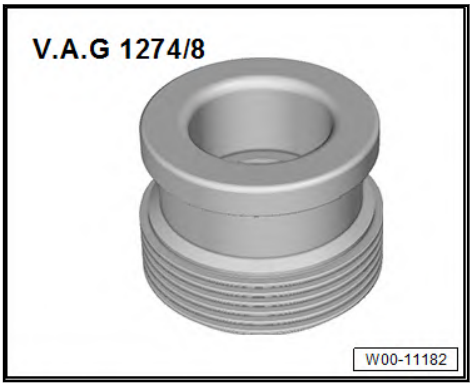

Note

The toothed belt must be renewed if it has been removed.

Removing

– Drain coolant ⇒ c1.3.1 oolant", page 198 .

– Pull hose -1- off air filter housing.

– Pull air filter housing upwards off studs at positions -2- and -3-.

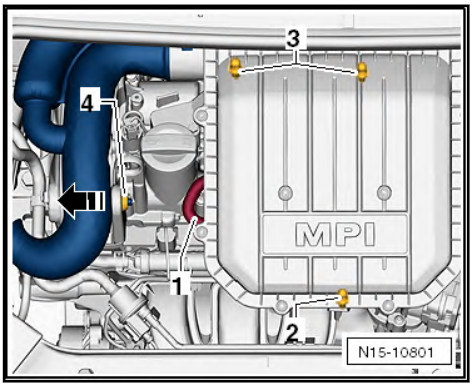

– Push air filter housing and intake connecting pipe in -direction of arrow- out of mounting -4-.

– Remove air filter housing from engine compartment.

– Remove coolant pump -1- and toothed belt guard -2- ⇒ a2.3 nd installing coolant pump ", page 212 .

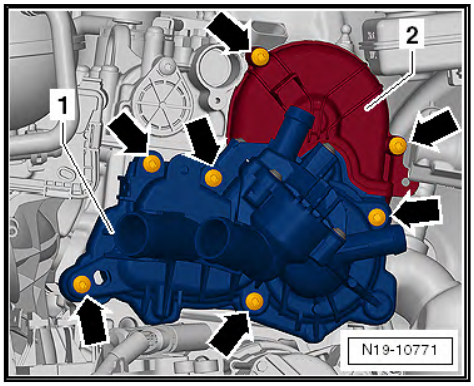

– Remove toothed belt from coolant pump toothed belt pulley.

Installing

Install in the reverse order of removal, observing the following:

– Fit toothed belt centrally onto camshaft pulley and coolant pump toothed belt pulley.

Note

Always make sure to carefully follow the given procedure for installation of the coolant pump.

– Install coolant pump -1- ⇒ a2.3 nd installing coolant pump ", page 212 .

– Add coolant ⇒ c1.3.1 oolant", page 198 .

– Install air filter housing ⇒ a3.2 nd installing air filter housing", page 260 .

Torque settings

Component	Torque setting
Coolant pump	12 Nm
Toothed belt guard	8 Nm

2.6 Removing and installing coolant temperature sender -G62-

Special tools and workshop equipment required

♦ Refractometer -T10007 A-

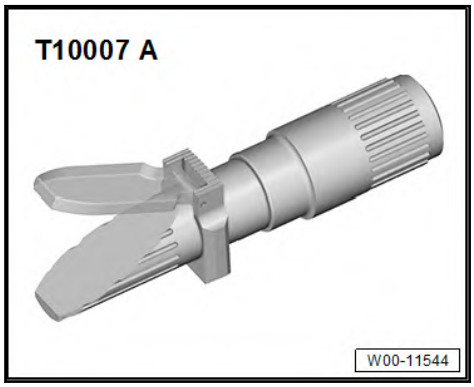

♦ Drip tray for workshop hoist -VAS 6208-

- Hose clamp pliers -VAS 6340-

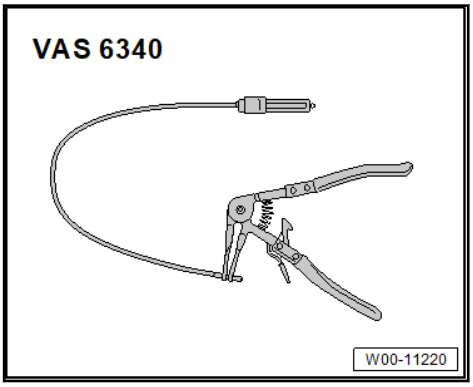

- Cooling system charge unit -VAS 6096-

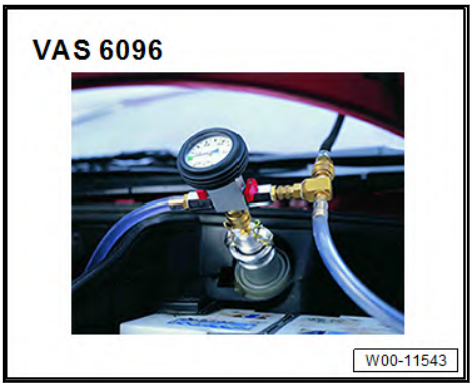

- Adapter for cooling system tester -V.A.G 1274/8-

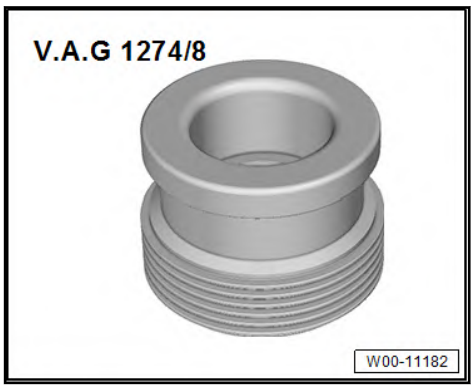

Removing

Fitting location: ⇒ Item 17 (page 71)

- Engine cold.

CAUTION

The cooling system could be under pressure. Hot steam/hot coolant can escape - risk of scalding.

Skin and other parts of the body may be scalded.

– Wear protective gloves.
– Wear protective goggles.
– Reduce excess pressure by covering cap of coolant expansion tank with suitable cloth and opening it carefully.

Note

The cap may have a different shape depending on the model year.

– Briefly open filler cap -1- of coolant expansion tank in order to relieve remaining pressure from cooling system.

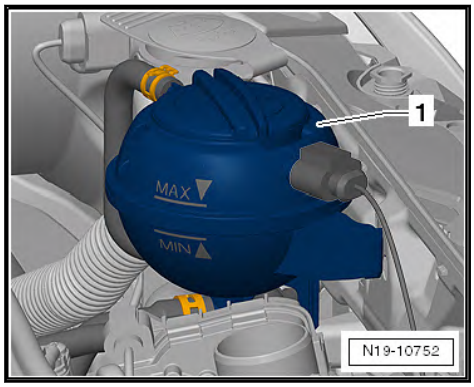

– Unlock and disconnect connector -2- from coolant temperature sender -G62- -1-.

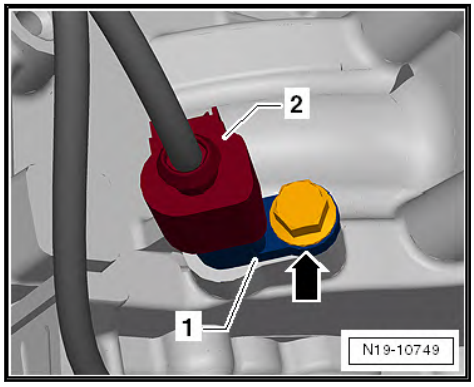

– Place a cloth under connecting piece to absorb escaping coolant.

Note

Insert new coolant temperature sender -G62- immediately into cylinder head in order to avoid loss of coolant.

– Unscrew bolt -arrow-.

Installing

Install in reverse order of removal. When doing this, observe the following:

– Check coolant level ⇒ a1.3 nd adding coolant", page 198 .

Torque settings

Component	Torque setting
Coolant temperature sender -G62-	8 Nm

2.7 Removing and installing radiator fan thermal switch -F18-

Special tools and workshop equipment required

- Refractometer -T10007 A-

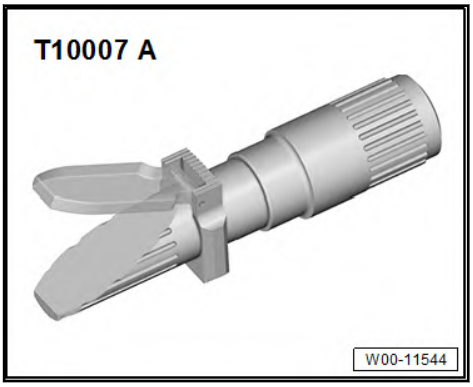

- Drip tray for workshop hoist -VAS 6208-

- Hose clamp pliers -VAS 6340-

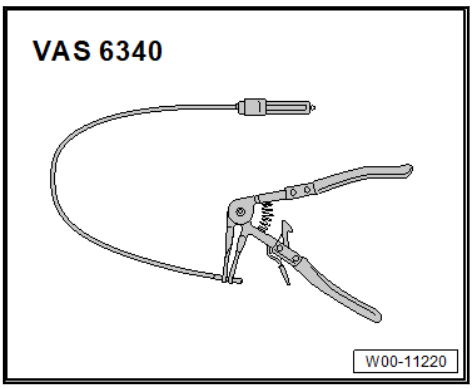

- Cooling system charge unit -VAS 6096-

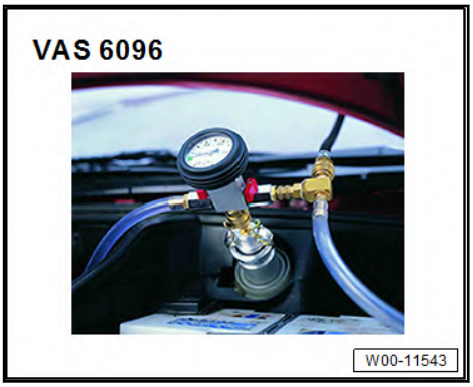

♦ Adapter for cooling system tester -V.A.G 1274/8-

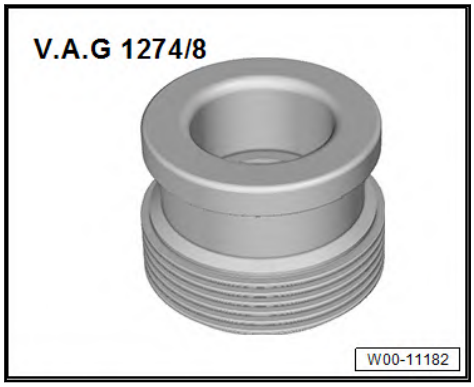

Removing

- Always observe ⇒ p1.4 recautions when working on the cooling system", page 2 .

Fitting location: ⇒ Item 12 (page 234)

CAUTION

The cooling system could be under pressure. Hot steam/hot coolant can escape - risk of scalding.

Skin and other parts of the body may be scalded.

- **Wear protective gloves.**
- **Wear protective goggles.**
- **Reduce excess pressure by covering cap of coolant expansion tank with suitable cloth and opening it carefully.**

– Drain coolant ⇒ a1.3 nd adding coolant", page 198 .

– Release and pull off connector -1- on radiator fan thermal switch -F18- -2-.

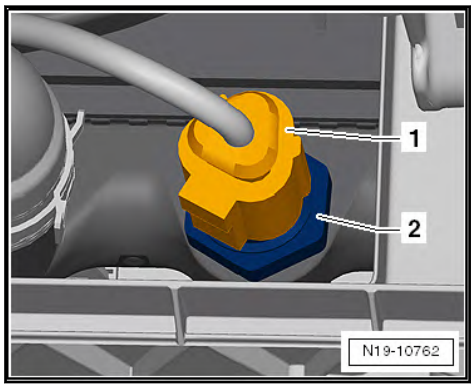

– Unscrew radiator fan thermal switch -F18- -2-.

Installing

Install in reverse order of removal. When doing this, observe the following:

Note

Renew seal.

– Add coolant ⇒ a1.3 nd adding coolant", page 198 .

Specified torque:

Component	Torque setting
Thermal switch to radiator	50 Nm

3 Radiator, radiator fan

⇒ o3.1 verview - radiator/radiator fan", page 232

⇒ a3.2 nd installing radiator", page 234

⇒ a3.3 nd installing radiator cowl with radiator fan", page 239

⇒ a3.4 nd installing radiator fanV7", page 241

3.1 Assembly overview - radiator/radiator fan

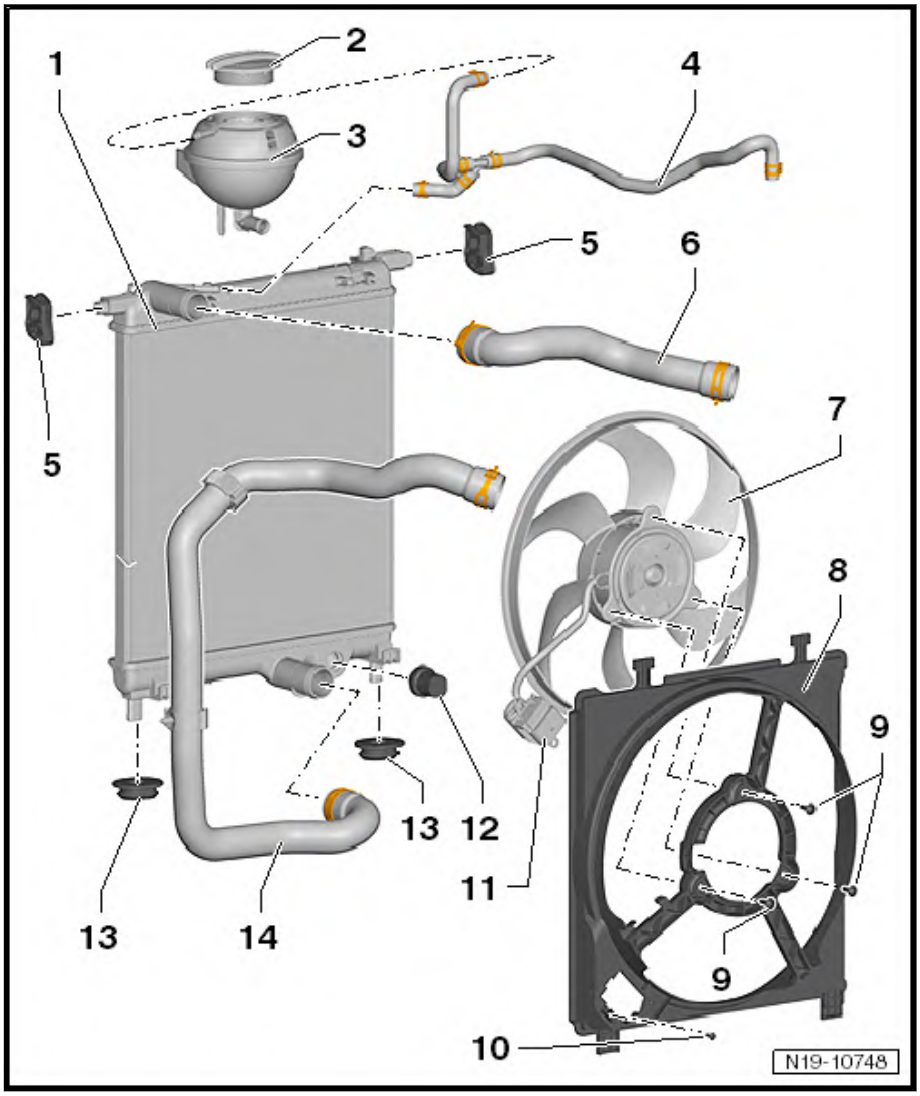

1 - Radiator/cooler

- ❑ Removing and installing ⇒ a3.2 nd installing radiator", page 234
- ❑ Connection diagram for coolant hoses ⇒ d1.1 iagram - coolant hoses", page 194
- ❑ After renewing, renew entire coolant ⇒ a1.3 nd adding coolant", page 198

2 - Cap

- ❑ Checking ⇒ c1.2 ooling system for leaks", page 194
- ❑ Check using cooling system tester -V.A.G 1274 B- and adapter for cooling system tester -V.A.G 1274/9-
- ❑ Test pressure: 1.4 to 1.6 bar

3 - Expansion tank

- ❑ Check for leaks ⇒ c1.2 ooling system for leaks", page 194
- ❑ Check cooling system for leaks using cooling system tester -V.A.G 1274 B- and adapter for cooling system tester -V.A.G 1274/8-
- ❑ Connection diagram for coolant hoses ⇒ d1.1 iagram - coolant hoses", page 194

4 - Coolant hose

- ❑ Connection diagram for coolant hoses ⇒ d1.1 iagram - coolant hoses", page 194
- ❑ Check for firm seating

5 - Radiator mounting

- ❑ For radiator
- ❑ Observe installation position
- ❑ Note locking mechanism ⇒ page 234 .

6 - Upper coolant hose

- ❑ Connection diagram for coolant hoses ⇒ d1.1 iagram - coolant hoses", page 194
- ❑ Check for firm seating

7 - Radiator fan

- ❑ Removing and installing ⇒ a3.4 nd installing radiator fanV7", page 241

8 - Cowling

- ❑ Removing and installing ⇒ a3.3 nd installing radiator cowl with radiator fan", page 239

9 - Bolt

- ❑ Installation radiator fan on cowling
- ❑ 10 Nm

10 - Bolt

- ❑ Coupling point connector
- ❑ 3 Nm

11 - Connector

12 - Radiator fan thermal switch -F18-

- ❑ For radiator fan
- ❑ Only vehicles with no air conditioning system

Switching temperatures

- ❑ 1st stage on: 92 … 97°C; off: 84 … 91°C
- ❑ 2nd stage on: 99 … 105°C; off: 91 … 98°C
- ❑ 50 Nm

13 - Radiator mounting

- ❑ Ensure proper seating

14 - Lower coolant hose

- ❑ Connection diagram for coolant hoses ⇒ d1.1 iagram - coolant hoses", page 194
- ❑ Check for firm seating

Locking mechanism of radiator mounting

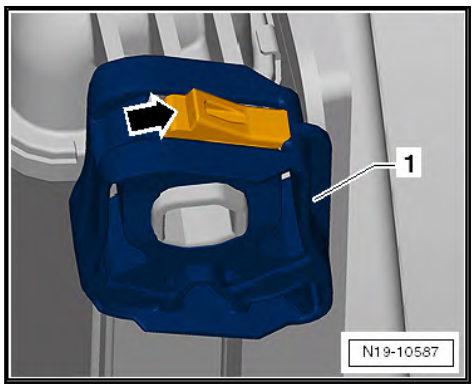

– Lift up locking lug -arrow- in order to release radiator mounting -1- from lock carrier.

3.2 Removing and installing radiator

Special tools and workshop equipment required

♦ Refractometer -T10007 A-

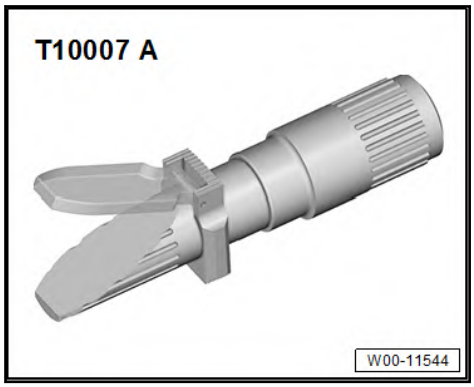

- Drip tray for workshop hoist -VAS 6208-

- Hose clamp pliers -VAS 6340-

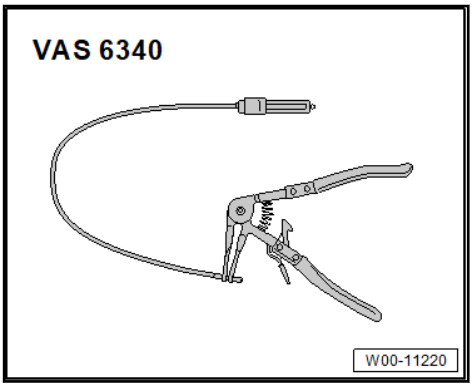

- Cooling system charge unit -VAS 6096-

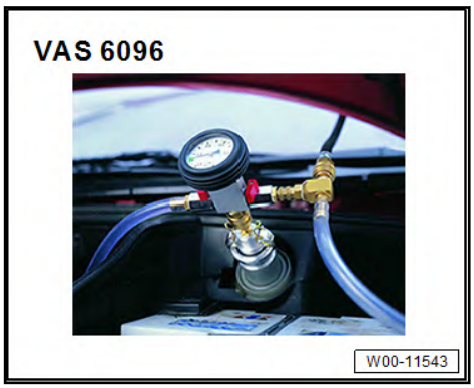

- Adapter for cooling system tester -V.A.G 1274/8-

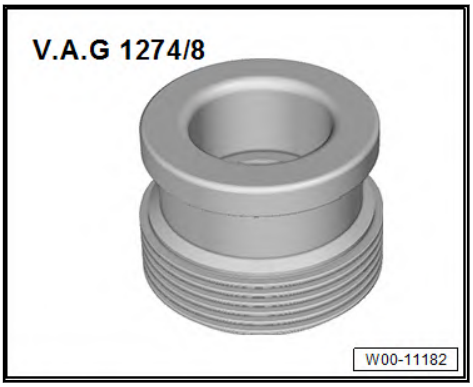

Removing

– Install front bumper ⇒ General body repairs, exterior; Rep. gr. 63; Front bumper.

– Drain coolant ⇒ a1.3 nd adding coolant", page 198 .

CAUTION

Danger of injury; the radiator fans can run at any time.

- **Separate electrical connectors.**

CAUTION

Risk of injury to hands caused radiator fan which may start automatically at any time.

- **Do not reach into radiator fan when disconnecting connector.**

- Disconnect connector -2- from wiring harness -1- of radiator fan -2-.

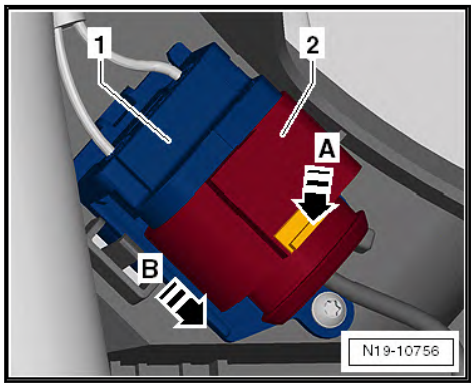

- To do this, unlock locking tab -arrow A-.
- Disconnect connector -2- in -direction of arrow B-.

Vehicles with radiator fan thermal switch -F18-

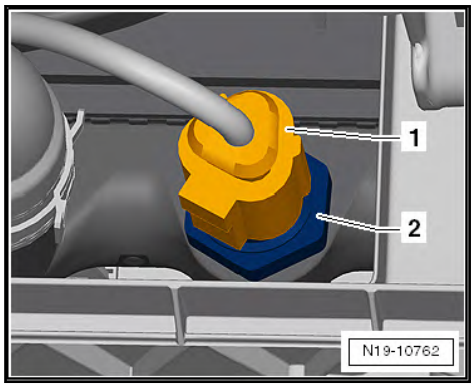

- Unlock and disconnect connector -1- from radiator fan thermal switch -F18-.

Continued for all vehicles

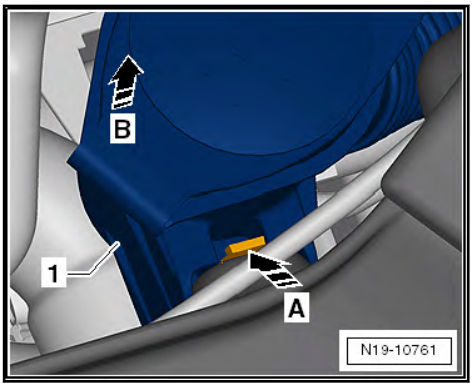

– Unlock locking tab -1- on filler neck of washer fluid reservoir in -direction of arrow A-.
– Pull filler neck -1- of washer fluid reservoir off in -direction of arrow B-.
– Loosen clamps -arrows- and disconnect coolant hoses -1- at top of radiator.

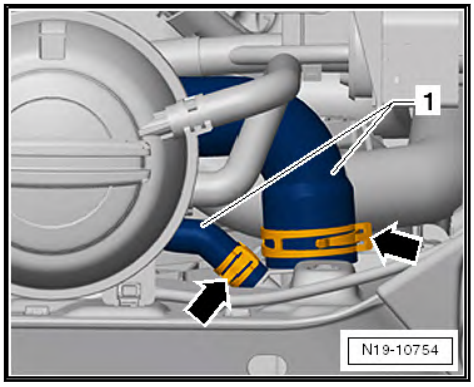

– Pull connectors off thermal switch and radiator fan.
– Remove front left headlights ⇒ Electrical system; Rep. gr. 94; Headlights; Removing and installing headlights

Vehicles with air conditioning system

Note

To prevent damage to condenser, refrigerant lines or hoses, ensure that lines and hoses are not stretched, kinked or bent.

– Remove condenser ⇒ Heating, air conditioning; Rep. gr. 87; Refrigerant circuit; Removing and installing condenser.

Continued for all vehicles

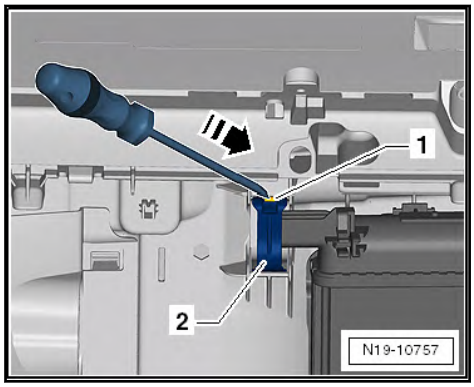

– Unlock retainers -2- on left and right side by pushing locking tab -1- in -direction of arrow- using a screwdriver.

– Tilt radiator -1- in -direction of arrow A-.

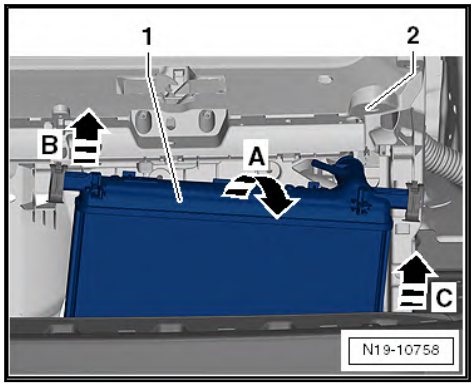

– Pull right side of radiator -1- upwards in -direction of arrow B-.

– Tilt radiator -1- further forwards in -direction of arrow A- to release it from lock carrier.

– Pull radiator -1- out of bottom mountings in -direction of arrow C-.

If the radiator is to be renewed:

– Remove radiator cowl with radiator fan ⇒ a3.3 nd installing radiator cowl with radiator fan", page 239 .

– Remove radiator fan thermal switch -F18-.

Installing

Install in reverse order of removal. When doing this, observe the following:

Vehicles with air conditioning system

Note

To prevent damage to condenser, refrigerant lines or hoses, ensure that lines and hoses are not stretched, kinked or bent.

– Install condenser ⇒ Heating, air conditioning; Rep. gr. 87; Refrigerant circuit; Removing and installing condenser.

– Add coolant ⇒ a1.3 nd adding coolant", page 198 .

– Observe electrical connections and routing ⇒ Current flow diagrams, Electrical fault finding and Fitting locations.

– Install front bumper ⇒ General body repairs, exterior; Rep. gr. 63; Front bumper.

3.3 Removing and installing radiator cowl with radiator fan

Special tools and workshop equipment required

♦ Refractometer -T10007 A-

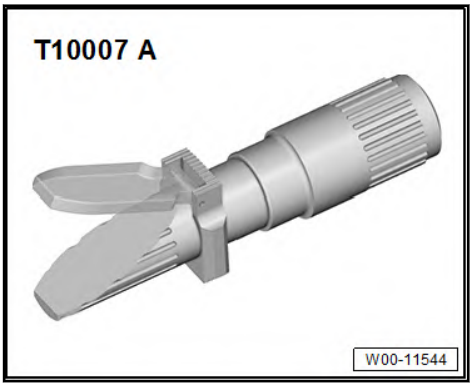

♦ Drip tray for workshop hoist -VAS 6208-

♦ Hose clamp pliers -VAS 6340-

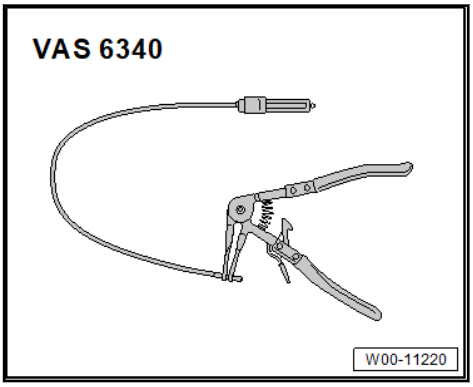

- Cooling system charge unit -VAS 6096-

- Adapter for cooling system tester -V.A.G 1274/8-

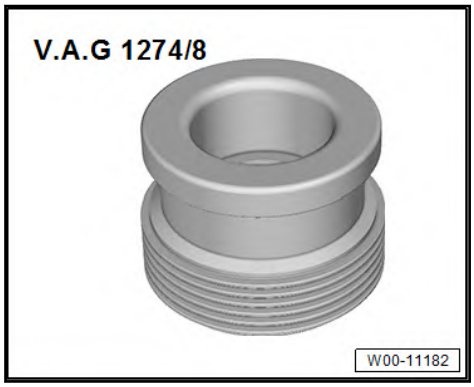

CAUTION

Danger of injury; the radiator fans can run at any time.

– **Separate electrical connectors.**

CAUTION

Risk of injury to hands caused radiator fan which may start automatically at any time.

– **Do not reach into radiator fan when disconnecting connector.**

Removing

– Drain coolant ⇒ a1.3 nd adding coolant", page 198 .

– Install front bumper ⇒ General body repairs, exterior; Rep. gr. 63; Front bumper.

– Removing radiator ⇒ a3.2 nd installing radiator", page 234 .

– Push locking tab in -direction of arrow A- in order to unlock radiator cowl -1-.

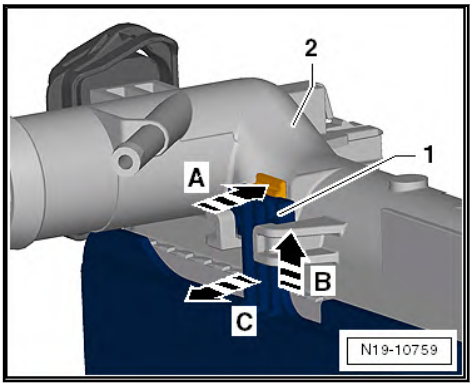

– Pull radiator cowl -1- in -direction of arrow B- out of retainer -2- on radiator.

– Tilt radiator cowl -1- in -direction of arrow C- and pull it out of bottom mountings.

– Remove radiator cowl -1-.

If the radiator cowl is to be renewed:

– Removing radiator fan ⇒ a3.3 nd installing radiator cowl with radiator fan", page 239 .

Installing

Install in reverse order of removal. When doing this, observe the following:

– Add coolant ⇒ a1.3 nd adding coolant", page 198 .

– Observe electrical connections and routing ⇒ Current flow diagrams, Electrical fault finding and Fitting locations.

– Install front bumper ⇒ General body repairs, exterior; Rep. gr. 63; Front bumper.

3.4 Removing and installing radiator fan -V7-

Special tools and workshop equipment required

♦ Refractometer -T10007 A-

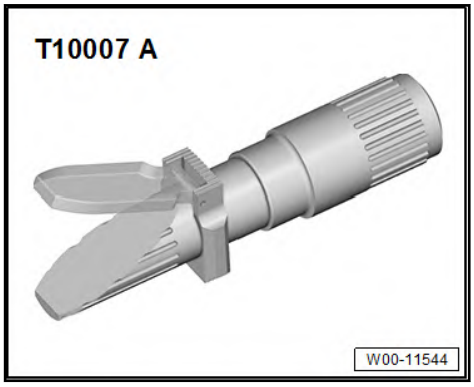

- Drip tray for workshop hoist -VAS 6208-

- Hose clamp pliers -VAS 6340-

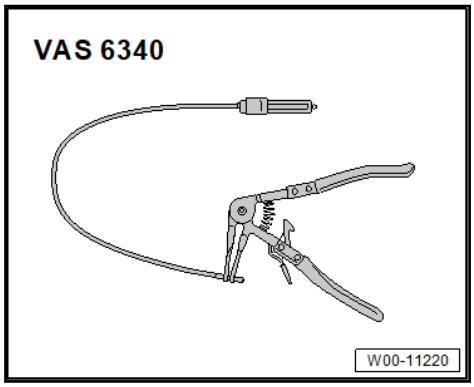

- Cooling system charge unit -VAS 6096-

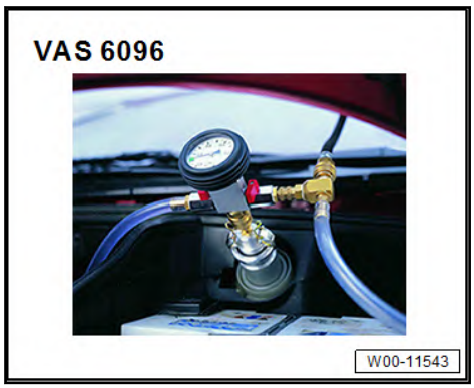

- Adapter for cooling system tester -V.A.G 1274/8-

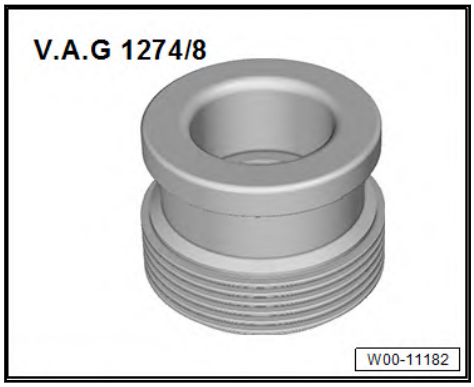

⚠ CAUTION

Danger of injury; the radiator fans can run at any time.
– Separate electrical connectors.

CAUTION

Risk of injury to hands caused radiator fan which may start automatically at any time.

- **Do not reach into radiator fan when disconnecting connector.**

Removing

- Drain coolant ⇒ a1.3 nd adding coolant", page 198 .
- Install front bumper ⇒ General body repairs, exterior; Rep. gr. 63; Front bumper.
- Removing radiator ⇒ a3.2 nd installing radiator", page 234 .
- Remove radiator cowl with radiator fan ⇒ a3.3 nd installing radiator cowl with radiator fan", page 239 .
- Unscrew bolt -1- from radiator cowl -2-.

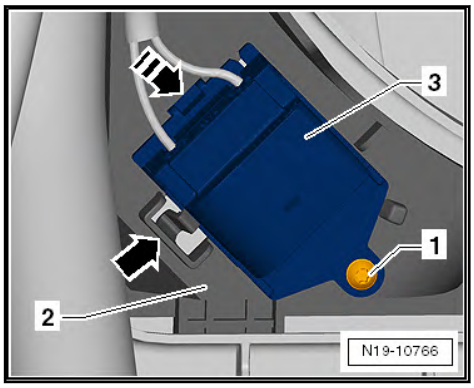

- Press locking tab in -direction of arrow- to unlock wiring harness -3-.
- Push wiring harness -3- in -direction of arrow- and remove.
- Unscrew bolts -arrows-.

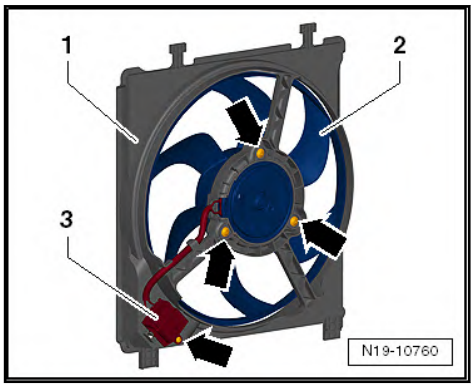

- Remove wiring harness -3- from wiring guides of radiator cowl -2-.
- Remove radiator fan -2-.

Installing

Install in reverse order of removal. When doing this, observe the following:

- Add coolant ⇒ a1.3 nd adding coolant", page 198 .
- Observe electrical connections and routing ⇒ Current flow diagrams, Electrical fault finding and Fitting locations.

– Install front bumper ⇒ General body repairs, exterior; Rep. gr. 63; Front bumper.

Torque settings

- ⇒ o3.1 verview - radiator/radiator fan", page 232
- ⇒ General body repairs, exterior; Rep. gr. 63; Front bumper.

24 – Mixture preparation - injection

1 Injection system

⇒ o1.1 f fitting locations - injection system", page 245

⇒ o1.2 verview - fuel system", page 248

1.1 Overview of fitting locations - injection system

Overview of fitting locations - engine compartment

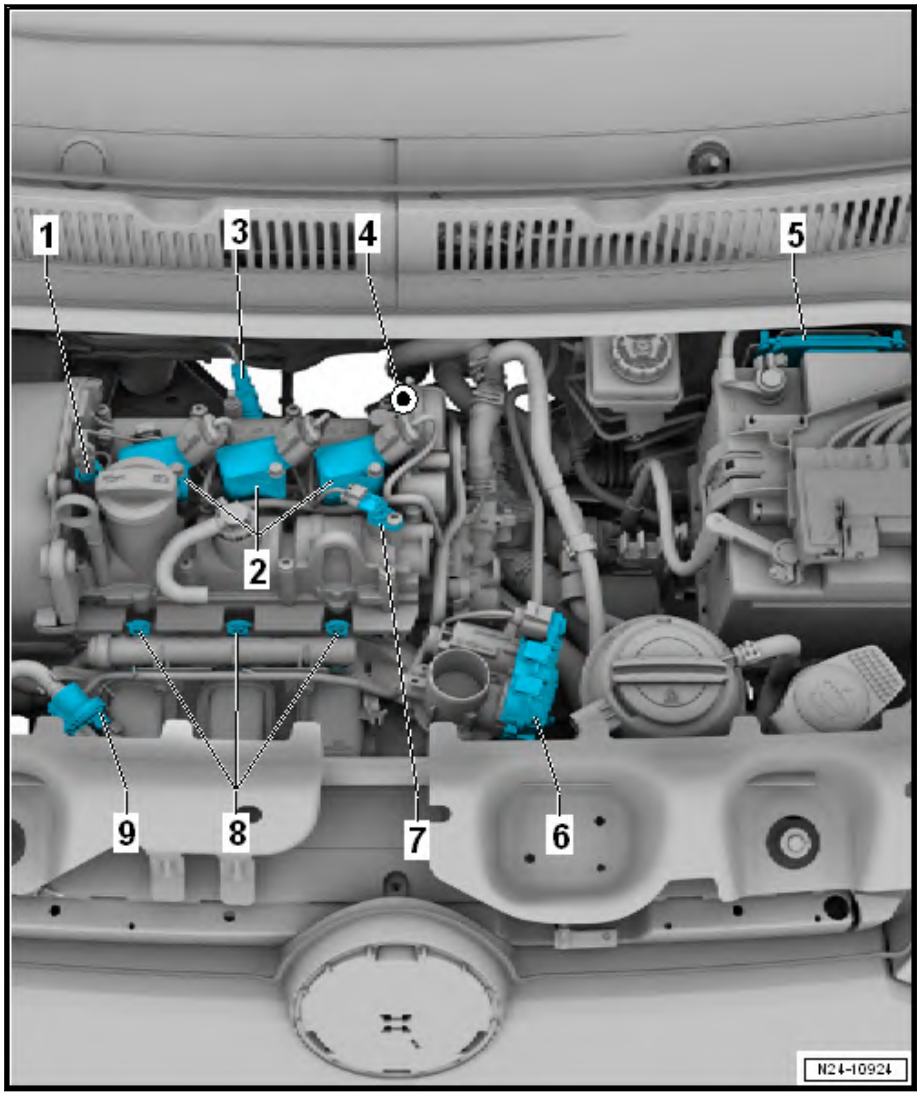

1 - Inlet camshaft control valve 1 -N205-

2 - Ignition coils with output stages

- ♦ Ignition coil 1 with output stage -N70-
- ♦ Ignition coil 2 with output stage -N127-
- ♦ Ignition coil 3 with output stage -N291-
  - ❑ Removing and installing ⇒ a1.2 nd installing ignition coils with output stage", page 305

3 - Lambda probe 1 before catalytic converter -GX10-

- ❑ Consisting of

  Lambda probe before catalytic converter -G39-

  Lambda probe heater -Z19-
- ❑ Removing and installing ⇒ a7.2.1 nd installing Lambda probe 1 before catalytic converterGX10", page 284

4 - Lambda probe 1 after catalytic converter -GX7-

- ❑ Consisting of:

  Lambda probe after catalytic converter -G130-

  Lambda probe 1 heater after catalytic converter -Z29-
- ❑ Removing and installing ⇒ a7.2.2 nd installing Lambda probe 1 after catalytic converterGX7", page 285

5 - Engine control unit -J623-

- ❑ Removing and installing ⇒ a6.2 nd installing engine control unitJ623", page 274

6 - Throttle valve module -GX3-

- ❑ Consisting of:

  Throttle valve module -J338-

  Throttle valve drive for electronic power control -G186-

  Throttle valve drive angle sender 1 for electronic power control -G187-

  Throttle valve drive angle sender 2 for electronic power control -G188-
- ❑ Removing and installing ⇒ a4.3 nd installing throttle valve moduleGX3", page 267
- ❑ Cleaning ⇒ page 269

7 - Hall sender -G40-

- ❑ Removing and installing ⇒ a1.4 nd installing Hall sender", page 309

8 - Injectors

- ♦ Injector, cylinder 1 -N30-

- Injector, cylinder 2 -N31-
- Injector, cylinder 3 -N32-
  - Removing and installing ⇒ a2.2 nd installing injectors", page 251
  - Checking ⇒ i2.3 njectors", page 253

9 - Activated charcoal filter solenoid valve 1 -N80-

Installation location overview, intake side

1 - Oil pressure switch -F1-

- Removing and installing ⇒ page 189
- Checking oil pressure and oil pressure switch ⇒ page 190 .

2 - Intake manifold sender -GX9-

- Consisting of

  Intake air temperature sender 2 -G299-

  Intake manifold pressure sender -G71-
- Removing and installing ⇒ a5.1 nd installing intake manifold senderGX9", page 271

3 - Engine speed sender -G28-

- Removing and installing ⇒ a1.5 nd installing engine speed senderG28", page 310

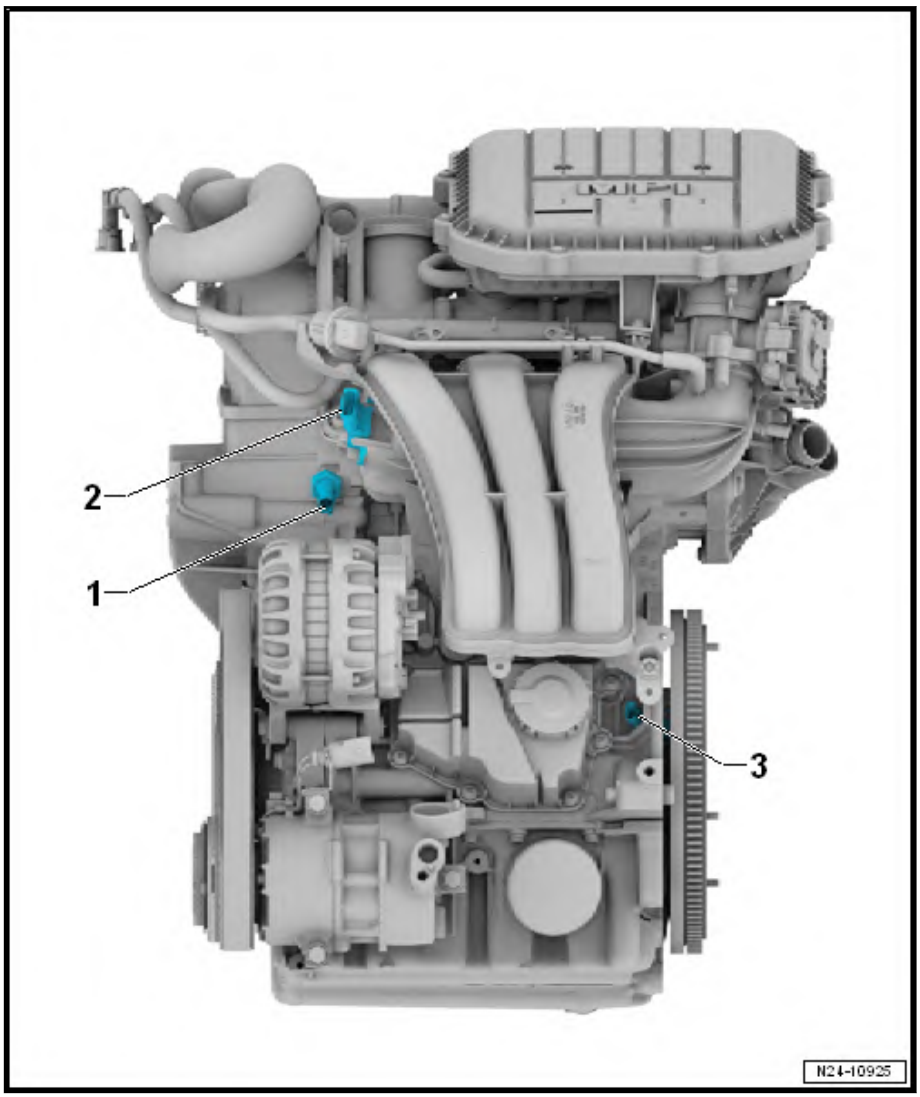

Installation location overview, exhaust side

1 - Knock sensor 1 -G61-

- ❑ Removing and installing ⇒ a1.3 nd installing knock sensor 1G61", page 308

2 - Radiator outlet coolant - G62-

- ❑ Removing and installing ⇒ page 226

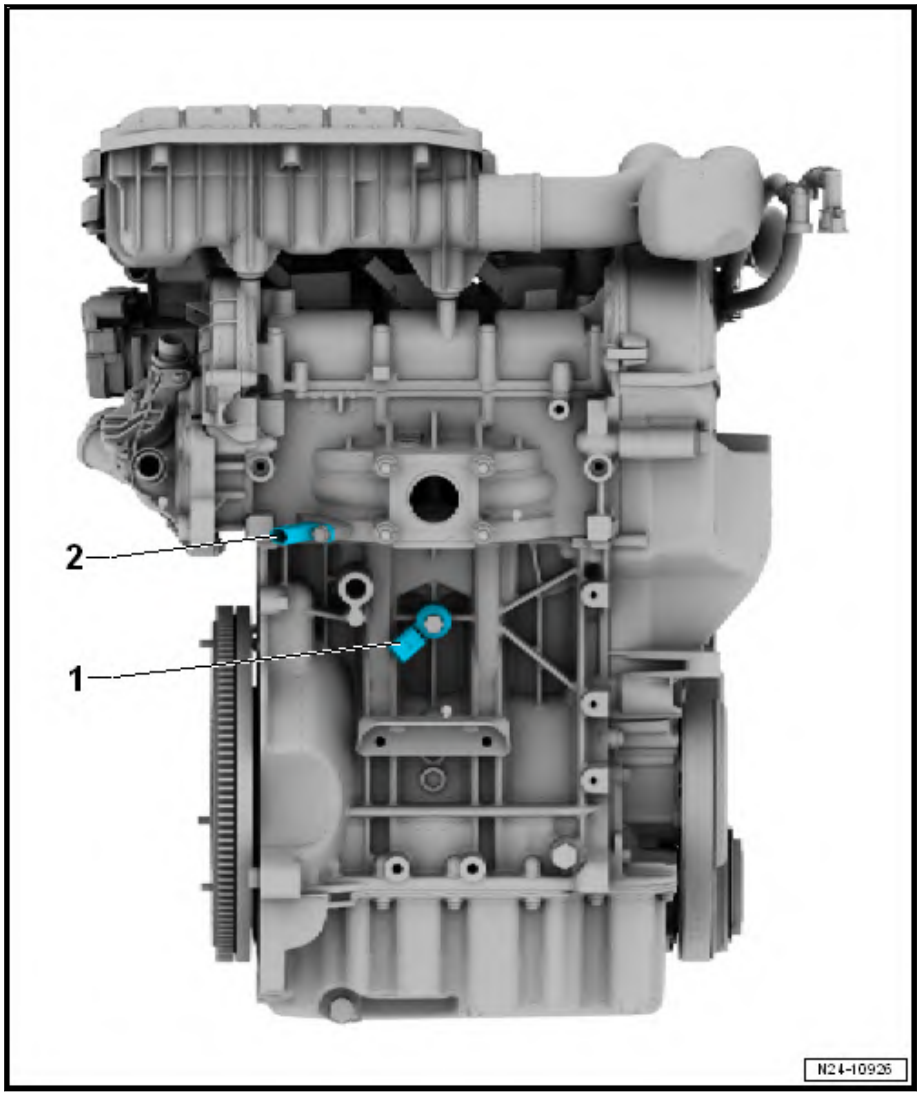

1.2 Assembly overview - fuel system

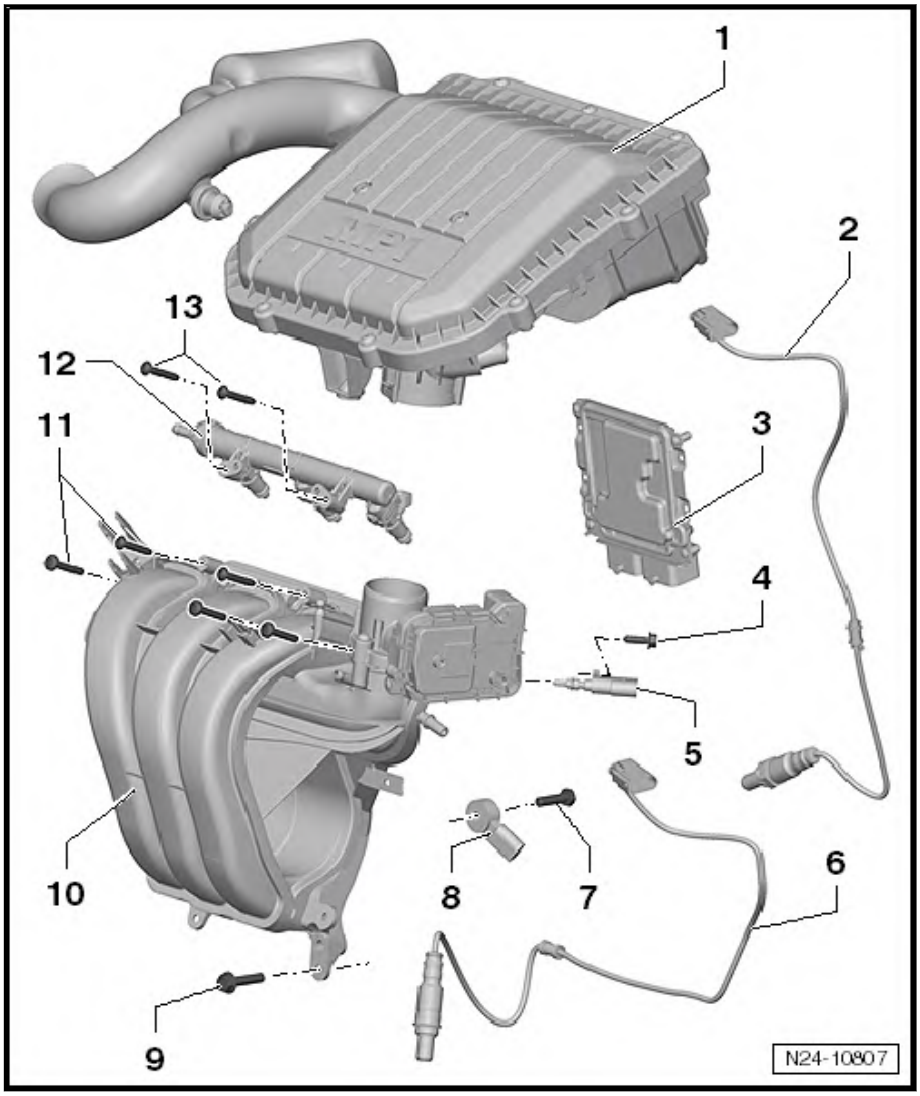

1 - Air filter

- ❑ Removing and installing ⇒ a3.2 nd installing air filter housing", page 260

2 - Lambda probe 1 before catalytic converter -GX10-

- ❑ Consisting of

  Lambda probe before catalytic converter -G39-

  Lambda probe heater -Z19-

- ❑ Grease only the threads with "G 052 112 A3"; "G 052 112 A3" cannot get into the slots on the probe body.
- ❑ Removing and installing ⇒ a7.2.1 nd installing Lambda probe 1 before catalytic converterGX10", page 284
- ❑ 50 Nm

3 - Engine control unit -J623-

- ❑ Removing and installing ⇒ a6.2 nd installing engine control unitJ623", page 274

If the engine control unit -J623- needs to be renewed, connect ⇒ Vehicle diagnostic tester and perform "Guided functions, Renewing engine control unit".

- ❑ If renewed, adapt engine control unit -J623- to electronic immobiliser ⇒ Vehicle diagnostic tester "Guided functions".

4 - Bolt

- ❑ For engine speed sender -G28-.
- ❑ 8 Nm

5 - Radiator outlet coolant -G62-

- ❑ Removing and installing ⇒ page 226
- ❑ Before removing, release pressure in cooling system if necessary.

6 - Lambda probe 1 after catalytic converter -GX7-

- ❑ Consisting of:

  Lambda probe after catalytic converter -G130-

  Lambda probe 1 heater after catalytic converter -Z29-

- ❑ Grease only the threads with "G 052 112 A3"; "G 052 112 A3" cannot get into the slots on the probe body.
- ❑ Remove and install with ⇒ a7.2.2 nd installing Lambda probe 1 after catalytic converterGX7", page 285 .
- ❑ 50 Nm

7 - Bolt

- ❑ For knock sensor
- ❑ 20 Nm

8 - Knock sensor

- ❑ Removing and installing ⇒ a1.3 nd installing knock sensor 1G61", page 308

9 - Bolt

- ❑ 20 Nm

10 - Intake manifold

- ❑ Removing and installing ⇒ a4.2 nd installing intake manifold", page 264

11 - Bolt

- ❑ 8 Nm
- ❑ Qty. 5

12 - Fuel rail with injectors

- ❑ Injector, cylinder 1 -N30-
- ❑ Injector, cylinder 2 -N31-
- ❑ Injector, cylinder 3 -N32-
- ❑ Removing and installing ⇒ o2.1 verview - fuel rail with injectors", page 251

13 - Bolt

- ❑ 7 Nm

2 Injectors

⇒ o2.1 verview - fuel rail with injectors", page 251

⇒ a2.2 nd installing injectors", page 251

⇒ i2.3 njectors", page 253

⇒ i2.4 njectors", page 258

2.1 Assembly overview - fuel rail with injectors

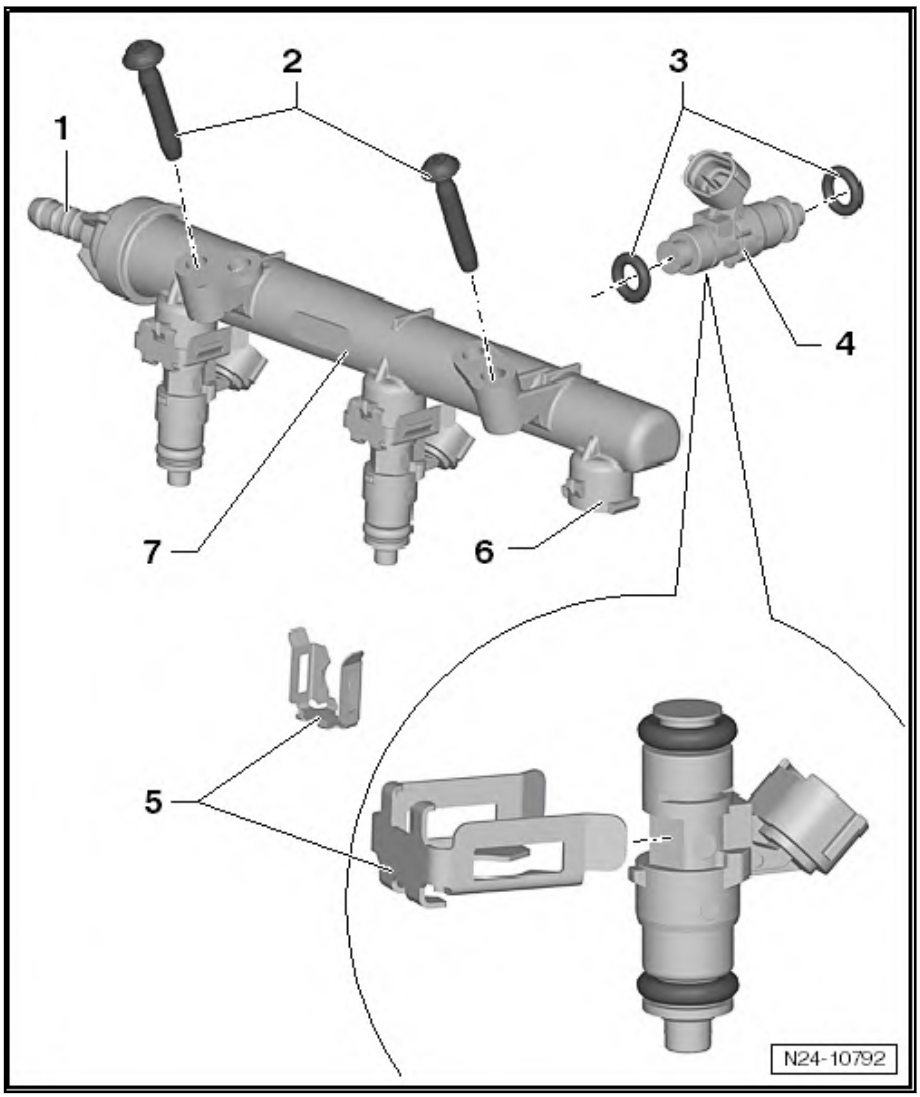

1 - Supply line

- ❑ Black with white marks.
- ❑ Secure with spring-type clips
- ❑ Ensure firm seating
- ❑ From fuel filter.

2 - Bolt

- ❑ 7 Nm

3 - O-ring

- ❑ Renew
- ❑ Before installing, moisten lightly with clean engine oil.

4 - Injector

- ❑ Injector, cylinder 1 - N30-
- ❑ Injector, cylinder 2 - N31-
- ❑ Injector, cylinder 3 - N32-
- ❑ Removing and installing ⇒ a2.2 nd installing injectors", page 251
- ❑ Checking injectors for leaks and quantity injected ⇒ i2.3 njectors", page 253

5 - Retaining clip

- ❑ Ensure correct seating on injector and fuel rail

6 - Injector seat

- ❑ Ensure proper seating of retaining clip on fuel rail.

7 - Fuel rail with injectors

- ❑ Checking injectors for leaks and quantity injected ⇒ i2.3 njectors", page 253

2.2 Removing and installing injectors

Special tools and workshop equipment required

♦ Torque wrench -V.A.G 1331-

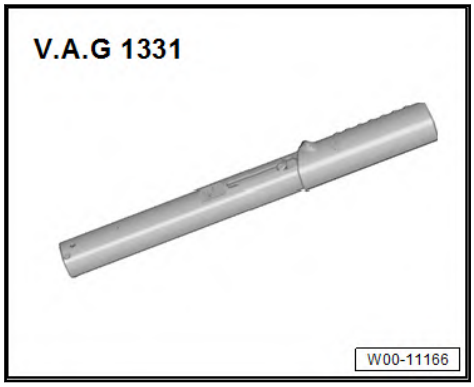

Removing

– Pull hose -1- off air filter housing.

– Pull air filter housing upwards off studs at positions -2- and -3-.

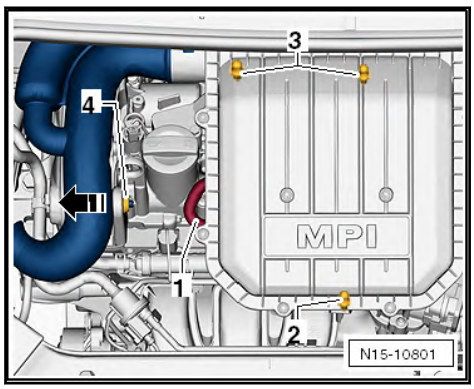

– Push air filter housing and intake connecting pipe in -direction of arrow- out of mounting -4-.

– Remove air filter housing from engine compartment.

– Release and pull off connectors -1- and -2-.

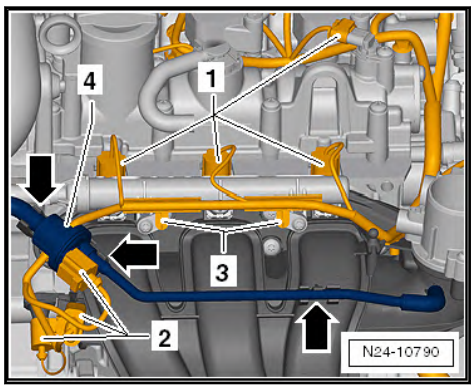

– Unclip retaining clips -3- for wiring harness from fuel rail.

– Release and pull off fuel supply line -1- ⇒ Rep. gr. 20; Plug-in connectors; Disconnecting plug-in connectors.

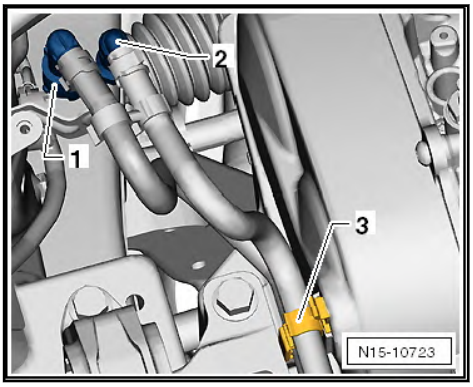

– Open line guide -3- and remove hoses.
– Seal line so that fuel system is not contaminated by dirt.
– Unscrew bolts -2- from intake manifold.

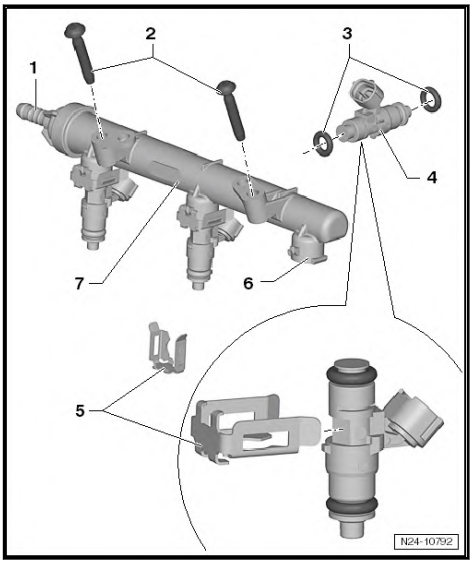

– Pull fuel rail -7- with injectors -4- out of the intake manifold.
– Carefully remove retaining clip -5- of injector to be removed.
– Pull off injector from fuel rail.

Installing

Install in reverse order of removal. When doing this, observe the following:

– Renew seals.
– Before installing, lightly coat seals with clean engine oil.
– Ensure proper seating of seals.
– Observe installation position of retaining clips.
– Ensure proper seating of injectors -4- on injector seat -6-.

Component	Torque setting
Fuel rail to intake manifold	7 Nm

2.3 Checking injectors

Special tools and workshop equipment required

- Remote control for V.A.G 1348 -V.A.G 1348/3A-

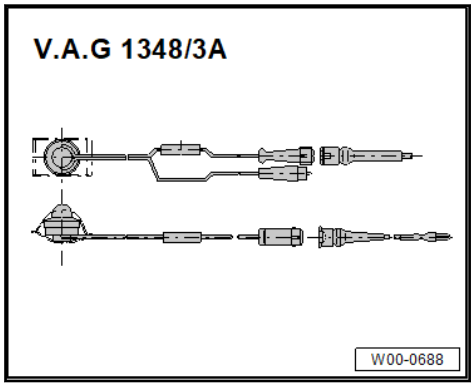

- Adapter line -V.A.G 1348/3-2-
- Adapter set -V.A.G 1594 C-

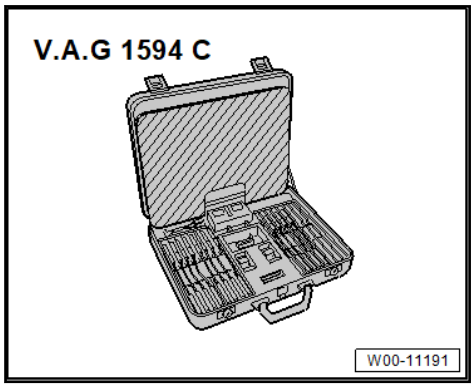

- Injection rate tester -V.A.G 1602-

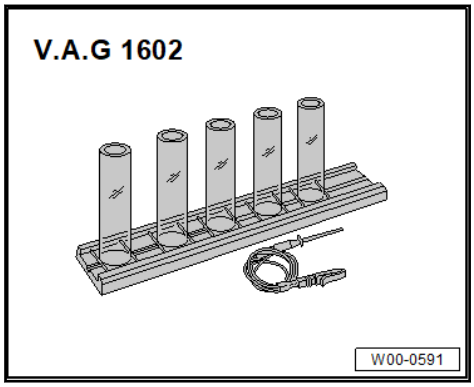

- Digital potentiometer -V.A.G 1630-

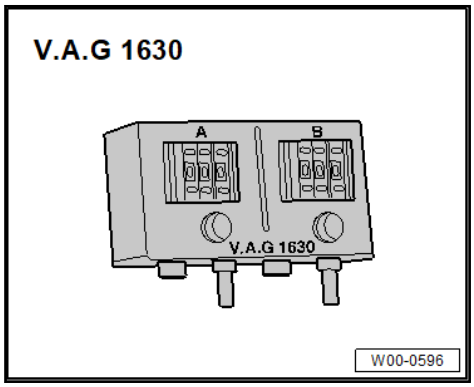

Checking injection quantity and spray pattern of injectors

Prerequisites for check

- Fuel pressure OK ⇒ Rep. gr. 20; Fuel pump; Checking fuel system pressurisation pump G6

Test sequence

– Pull hose -1- off air filter housing.

– Pull air filter housing upwards off studs at positions -2- and -3-.

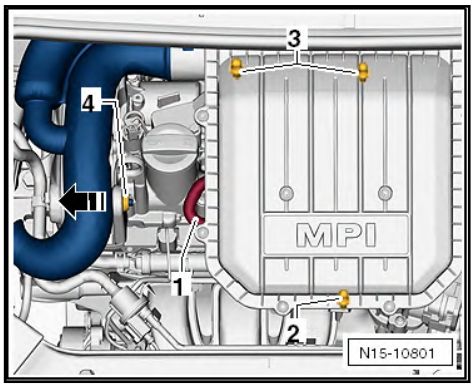

– Push air filter housing and intake connecting pipe in -direction of arrow- out of mounting -4-.

– Remove air filter housing from engine compartment.

– Remove fuel rail together with injectors ⇒ a2.2 nd installing injectors", page 251 .

Note

Insert fuel rail loosely in intake manifold to prevent any dirt from entering when the test equipment is being connected.

- Do not disconnect fuel hoses.
- Injectors are not being removed from fuel rail.
- All connectors for the injectors must be disconnected.

– Connect one contact of injector to be checked to remote control -V.A.G 1348/3-2- using test lead (adapter cable -V.A.G 1348/3A-).

– Connect other contact of injector to be checked to engine earth using auxiliary measuring set -V.A.G 1594C-.

– Connect earth wire to measuring cables -V.A.G 1594/2-, measuring cables -V.A.G 1594/19- and pick-up clamp -V.A.G 1594/14-.

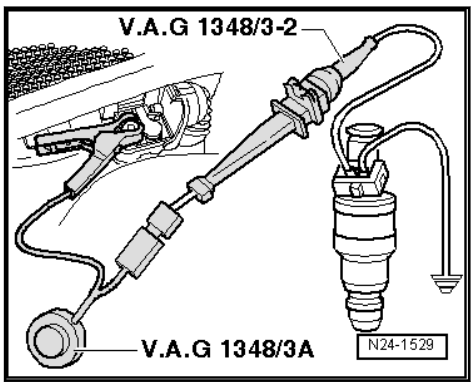

– Connect crocodile clip to positive battery pole in engine compartment.

– For injection rate measurement, take three measuring glasses from injection rate tester -V.A.G 1602-.
– Use one measuring glass for each injector to be tested.
– Connect ⇒ Vehicle diagnostic tester.

Note

- *During final control diagnosis, the relay for electronic fuel pump will only be activated for 30 seconds.*
- *The button on the remote control -V.A.G 1348/3A- must be pressed at the same moment as the final control diagnosis begins.*
- *The remote control of V.A.G 1348 -V.A.G 1348/3A- must be operated until no more fuel escapes from the injector.*

– Switch on ignition.
– Connect a ⇒ Vehicle diagnostic tester.
– Switch on ignition, and select following menu options on⇒ Vehicle diagnostic tester:

- `Vehicle self-diagnosis`
- `01 - Engine electronics`
- `005 - Final control diagnosis`
- `Fuel pump relay`
- `Start`

Note

- *After the check of one of the injectors has been completed, switch the ignition off, on and off again, before beginning the check of another injector.*
- *If the ignition is not switched off, on and off again in the intervals between the checks, it might not be possible to perform the final control diagnosis more than once.*

– Repeat check on other injectors.
– After all injectors have been activated, place measuring beakers on a level surface and compare the quantity injected.

Note

- *At the end of the final control diagnosis, there is still a small quantity of fuel in the system which needs to be taken into account.*
- *This quantity of approx. 6 ml of fuel needs to be subtracted from the total quantity during calculation.*
- *A sample calculation is provided in the table below.*

Total quantity in measuring glass after check is completed	Remaining quantity in system after check is completed (constant value)	Actual value
e.g.: 87 ml	- 6 ml	= 81 ml

Specification: 76…82 ml per injector

If the measured values of one or more injectors are above or below the prescribed specifications:

– Renew defective injector ⇒ o1.2 verview - fuel system", page 248 .

Check for leaks

Prerequisites for check

- Fuel pressure OK.
- Engine and fuel temperature: approx. 20°C.
- Fuel rail is removed.
- Connectors of all injectors are disconnected.

– As a precaution, place a measuring glass -V.A.G 1602/1- under each injector.

Note

♦ *During the leakage test, pressure will build up in the fuel system.*

♦ *Injectors will not be actuated.*

♦ *If fuel escapes from a valve, the valve is defective.*

– Connect ⇒ Vehicle diagnostic tester.

– Switch on ignition.

– Press following buttons on display one after the other:

♦ `Vehicle self-diagnosis`

♦ `01 - Engine electronics`

♦ `005 - Final control diagnosis`

♦ `Fuel pump relay`

♦ `Start`

– Switch off ignition.

Specification: No more than 2 drops must escape during final control diagnosis.

If the fuel loss is greater:

– Renew defective injector ⇒ o1.2 verview - fuel system", page 248 .

Install injectors in the reverse order of removal, observing the following:

– Renew O-rings on all injectors and lightly moisten with clean engine oil.

Specified torques:

♦ Fit fuel rail with secured injectors onto intake manifold and tighten evenly ⇒ o1.2 verview - fuel system", page 248 .

2.4 Cleaning injectors

Special tools and workshop equipment required

♦ Ultrasonic cleaning unit -VAS 6418-

♦ Mounting plate for injection modules -VAS 6418/1-

♦ Cleaning fluid ⇒ Electronic Parts Catalogue

Note

The ultrasonic unit must be filled with cleaning agent to upper edge of holes (see detail).

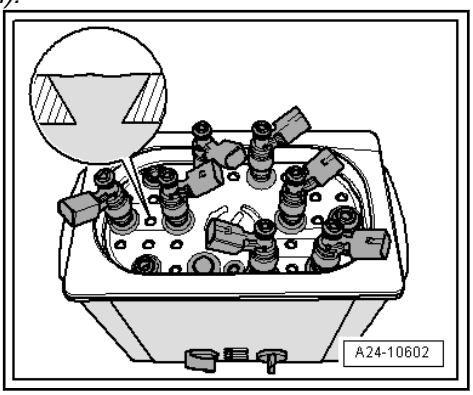

Observe ultrasonic unit safety regulations and operating instructions.

Cleaning

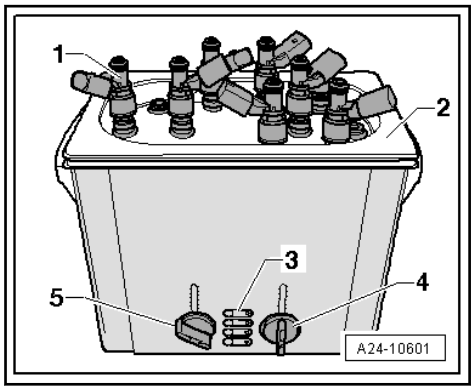

– Remove injectors ⇒ page 251 .

– Insert injectors -1- all the way into mounting plate for injection modules -VAS 6418/1- -item 2-.

– Immerse injectors together with mounting plate for injection modules -VAS 6418/1- into cleaning fluid -VAS 6418/2-.

– Set rotary knob -4- to a temperature of 50°C.

– Set a cleaning time of 30 minutes with the rotating knob -5-.
– Switch on ultrasonic cleaning unit with button -3-.

Note

The time set starts to elapse as soon as a cleaning temperature of 50°C has been attained.

– Immediately after cleaning, remove water residues from the injectors.
– After cleaning, renew all seals on every injector.
– Installing injectors ⇒ page 251

3 Air filter

⇒ o3.1 verview - air filter housing", page 260

⇒ a3.2 nd installing air filter housing", page 260

3.1 Assembly overview - air filter housing

1 - Intake hose

2 - Bolt
- ❑ Qty. 11
- ❑ 1.6 Nm

3 - Air filter upper part

4 - Air filter element
- ❑ ⇒ Maintenance; Booklet 808

5 - Air filter lower part

6 - Rubber mounting
- ❑ Ensure it is properly seated

7 - Seal
- ❑ Ensure it is properly seated

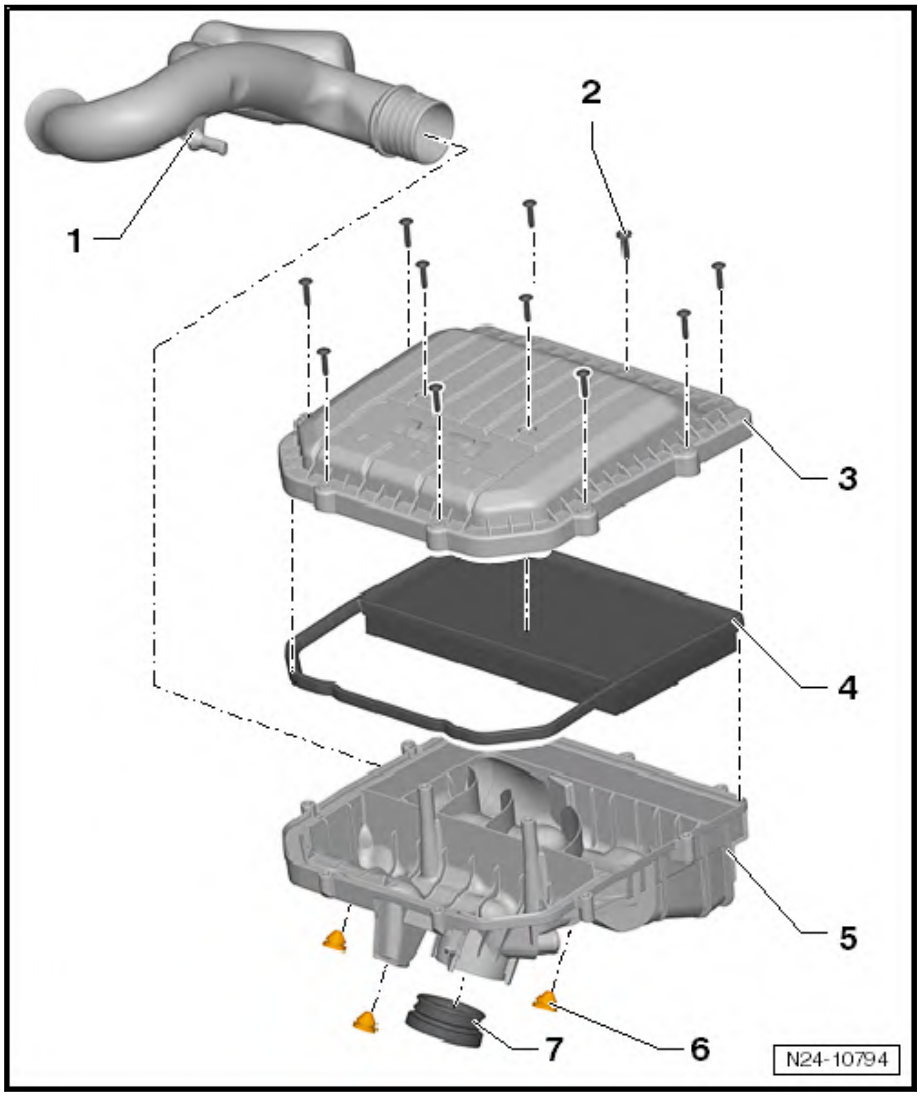

3.2 Removing and installing air filter housing

Note

- *Self-tapping bolts are used in production to fasten the upper part of the air filter to the lower part of the air filter. When these screws are loosened or tightened using a power tool, the threads in the intake manifold or the lower part of air filter may be damaged.*
- *For this reason, the use of a power tool is only permitted if the tool speed is max. 200 rpm and a max. specified torque of 1.6 Nm is set.*

Removing

– Pull hose -1- off air filter housing.

– Pull air filter housing upwards off studs at positions -2- and -3-.

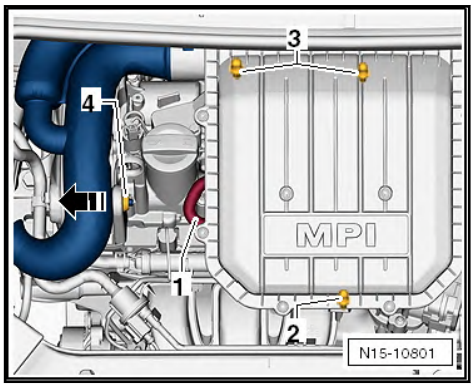

– Push air filter housing and intake connecting pipe in -direction of arrow- out of mounting -4-.

– Remove air filter housing from engine compartment.

– Unscrew bolts ⇒ Item 2 (page 260) for dismantling.

Installing

Install in reverse order of removal. When doing this, observe the following:

– Ensure proper seating of gasket.

– When installing engine cover panel, make sure that rubber buffers are correctly inserted into mountings.

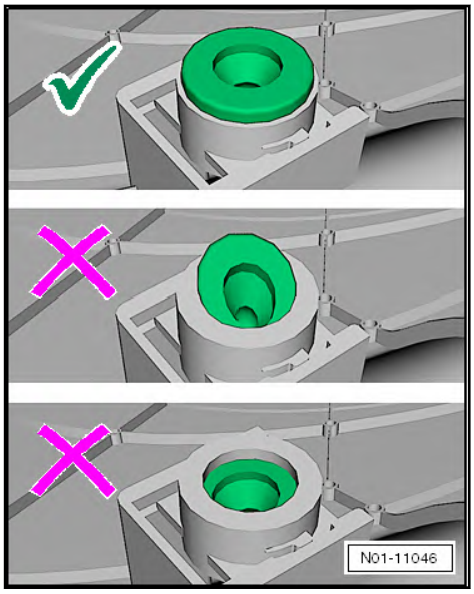

– Ensure proper seating of air filter.

4 Intake manifold

4.1 Assembly overview – intake manifold

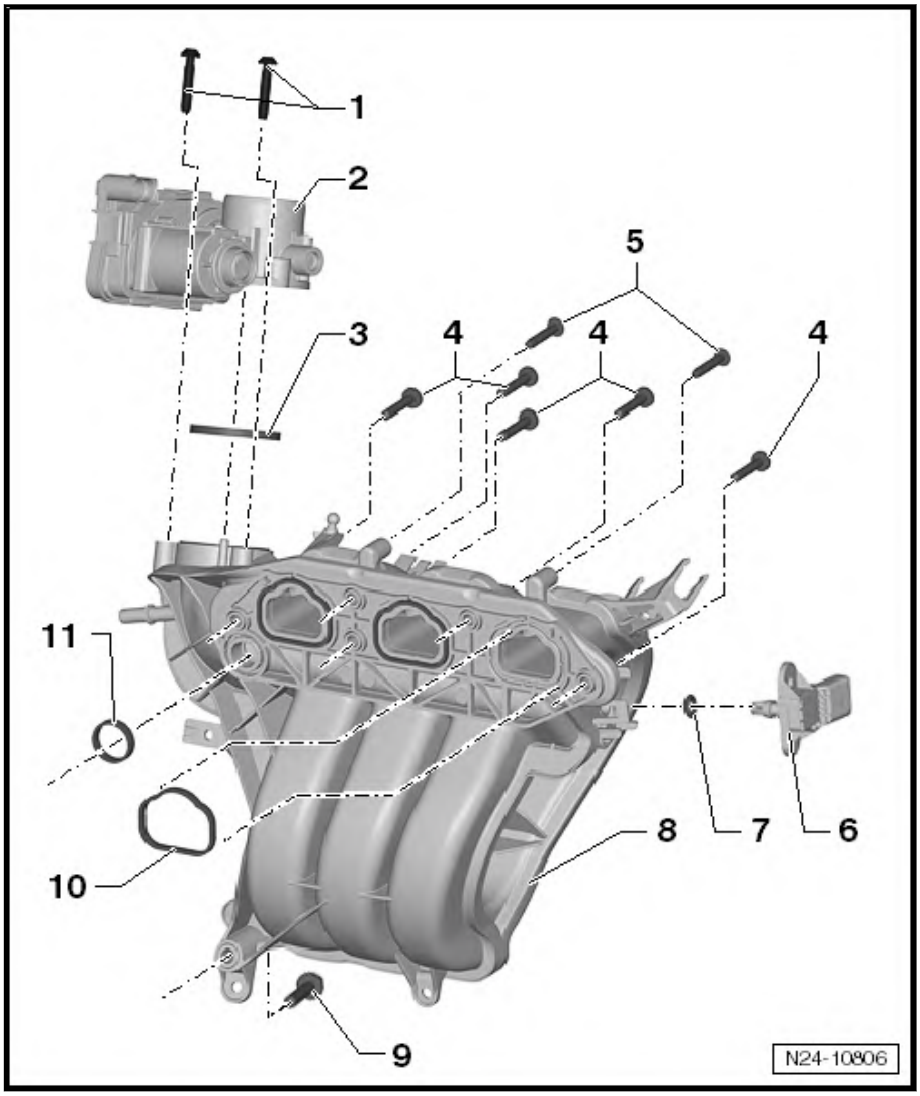

1 - Bolt

- ❑ Qty. 3
- ❑ 7 Nm

2 - Throttle valve module -GX3-

- ❑ Consisting of:

  Throttle valve module -J338-

  Throttle valve drive for electronic power control -G186-

  Throttle valve drive angle sender 1 for electronic power control -G187-

  Throttle valve drive angle sender 2 for electronic power control -G188-

- ❑ Cleaning ⇒ page 269
- ❑ 6-pin connector
- ❑ Gold-plated contacts
- ❑ Removing and installing ⇒ a4.3 nd installing throttle valve moduleGX3", page 267
- ❑ If renewed, adapt engine control unit -J623- to throttle valve module -GX3- ⇒ Vehicle diagnostic tester "Guided functions"

3 - Seal

- ❑ Renew if damaged

4 - Bolt

- ❑ Qty. 5
- ❑ 8 Nm

5 - Bolt

- ❑ For fuel rail
- ❑ 7 Nm

6 - Intake manifold sender -GX9-

- ❑ Consisting of

  Intake air temperature sender 2 -G299-

  Intake manifold pressure sender -G71-

- ❑ Removing and installing ⇒ a5.1 nd installing intake manifold senderGX9", page 271
- ❑ Repairing solution for missing locking tab ⇒ a5.1 nd installing intake manifold senderGX9", page 271
- ❑ 4-pin connector
- ❑ Gold-plated contacts
- ❑ 3 Nm

7 - O-ring

- ❑ Renew if damaged

8 - Intake manifold

- ❑ Removing and installing ⇒ a4.2 nd installing intake manifold", page 264

9 - Bolt

- ❑ 20 Nm

10 - Seal

- ❑ Renew if damaged

11 - Seal

- ❑ Renew if damaged

4.2 Removing and installing intake manifold

Special tools and workshop equipment required

- ♦ Torque wrench -V.A.G 1331-

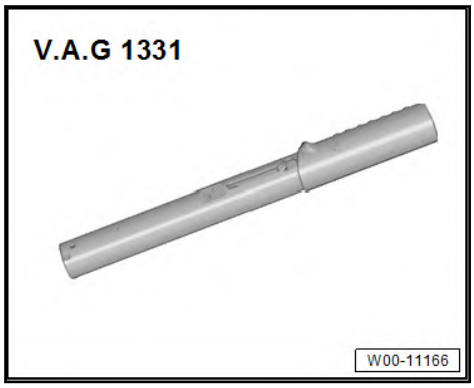

- ♦ Release lever -80 - 200-

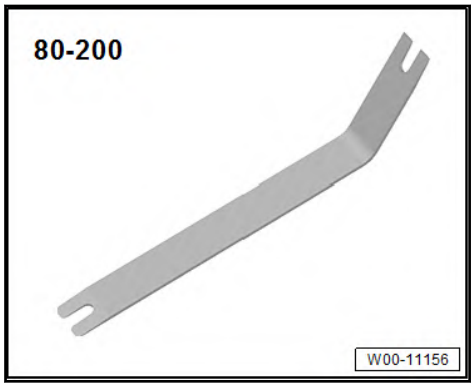

Removing

– Pull hose -1- off air filter housing.

– Pull air filter housing upwards off studs at positions -2- and -3-.

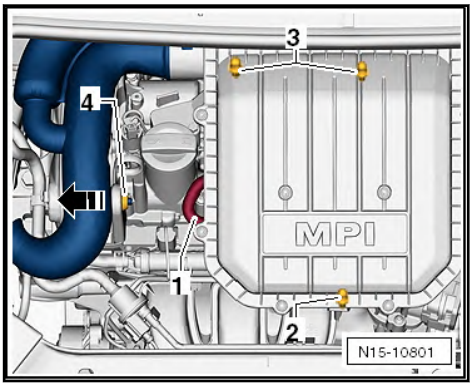

– Push air filter housing and intake connecting pipe in -direction of arrow- out of mounting -4-.
– Remove air filter housing from engine compartment.
– Bring lock carrier into service position ⇒ General body repairs, exterior; Rep. gr. 50; Lock carrier.
– Release connector -2- and pull off.

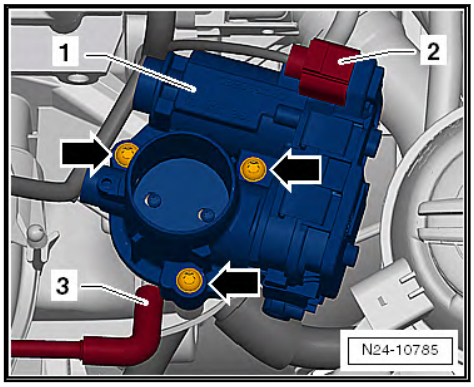

– Disconnect hose -3- from throttle valve module -GX3-.
– Disconnect line -4-.
– Release and pull off connectors -1- and -2-.

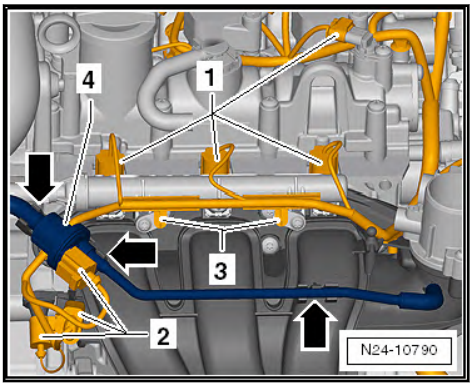

– Unclip wiring harness from retainers -3- on fuel rail and lay to side.
– Unclip line -4- from retainers -arrows-.
– Remove line -4- together with activated charcoal filter system solenoid valve 1 -N80- and lay to side.

Note

- *The fuel line does not need to be disconnected.*
- *Do not remove injectors from fuel rail.*

– Remove fuel rail together with injectors and lay to side ⇒ a2.2 nd installing injectors", page 251 .

– Remove wiring harness -1- from retainers -arrows- on intake manifold.

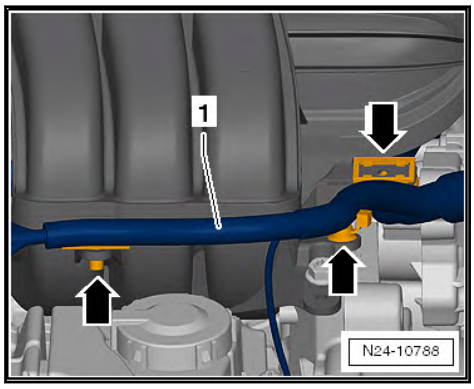

– Remove vacuum line -1- from intake manifold -2-.

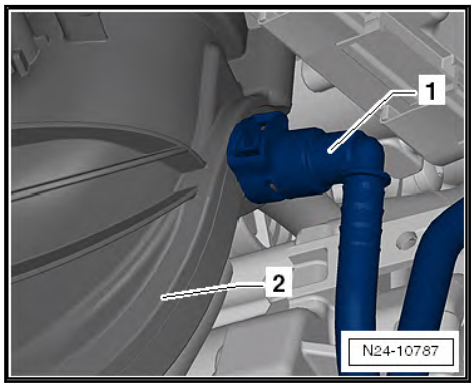

– Unscrew lower bolt -arrow- from intake manifold.

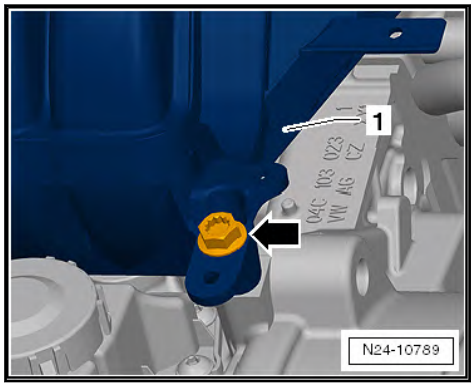

– Unscrew bolts -arrows-.

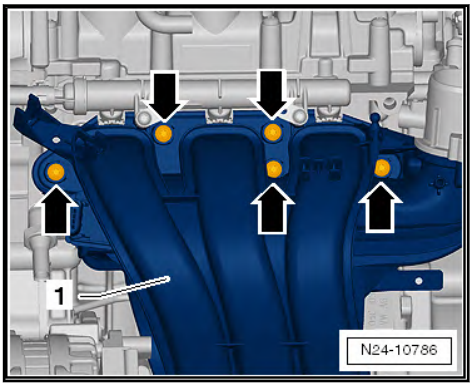

– Remove intake manifold -1-.

– If intake manifold is to be renewed, remove throttle valve module -GX3- ⇒ a4.3 nd installing throttle valve moduleGX3", page 267 .

Installing

Install in reverse order of removal. When doing this, observe the following:

– Ensure proper seating of gaskets.

Torque settings

♦ ⇒ o4.1 verview – intake manifold", page 262

4.3 Removing and installing throttle valve module -GX3-

Throttle valve module -GX3- consists of

♦ Throttle valve module -J338-

♦ Throttle valve drive for electronic power control -G186-

♦ Throttle valve drive angle sender 1 for electronic power control -G187-

♦ Throttle valve drive angle sender 2 for electronic power control -G188-

Special tools and workshop equipment required

♦ Torque wrench -V.A.G 1331-

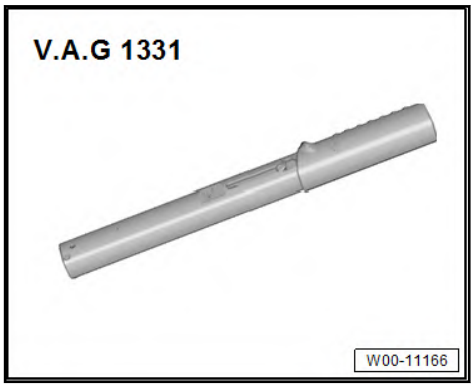

Removing

– Pull hose -1- off air filter housing.

– Pull air filter housing upwards off studs at positions -2- and -3-.

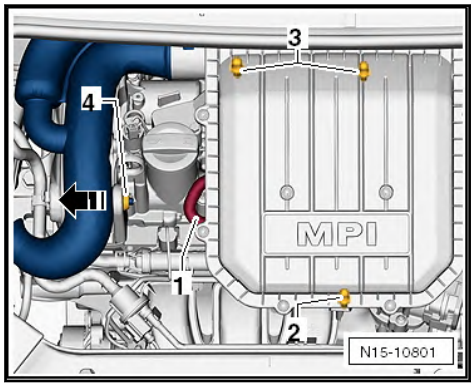

– Push air filter housing and intake connecting pipe in -direction of arrow- out of mounting -4-.
– Remove air filter housing from engine compartment.
– Release and disconnect connector -2- from throttle valve module -1-.

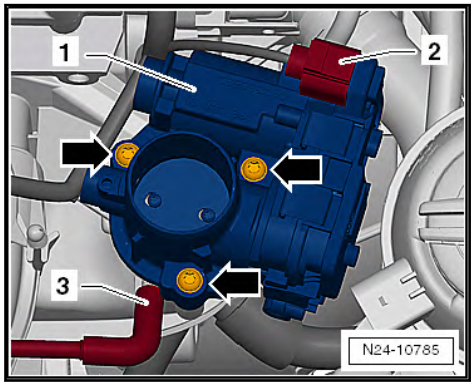

– Pull off hose -3-.
– Remove bolts -arrows- and detach throttle valve module -GX3-.

Installing

Install in reverse order of removal. When doing this, observe the following:

– Check throttle valve module -GX3- for cleanliness.
– Ensure proper seating of gasket.
– Ensure proper seating of guides -arrows-.

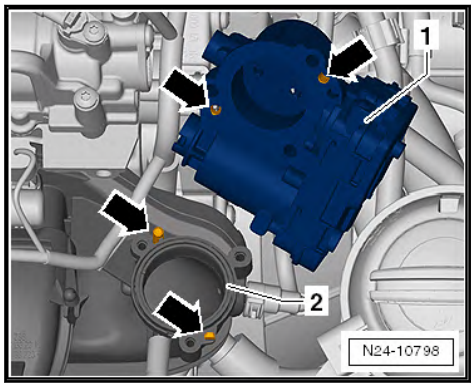

– Throttle valve module -GX3- -1- must accurately be fitted onto intake manifold -2-.

– After throttle valve control module -GX3- has been replaced, it must be re-adapted to engine control unit -J623-.

– Connect a ⇒ Vehicle diagnostic tester.

– Switch on ignition, and select and carry out following menu options on⇒ Vehicle diagnostic tester:

◆ `0001 - Clear learnt values`

◆ `0001 - Adaption of throttle valve module - J338`

Torque settings

◆ ⇒ o4.1 verview – intake manifold", page 262

4.4 Cleaning throttle valve module -GX3-

Note

◆ *If a new engine control unit -J623- is installed, the throttle valve module must be adapted.*

◆ *Contamination and coking in end stop can result in incorrect adaptation values.*

◆ *When cleaning the throttle valve housing, take care not to scratch it.*

Special tools and workshop equipment required

◆ Acetone (commercially available)

◆ Brush

Procedure

– Remove throttle valve module -GX3- ⇒ page 267 .

– Open throttle valve by hand and lock it in open position with a wedge (plastic or wood) -arrow-.

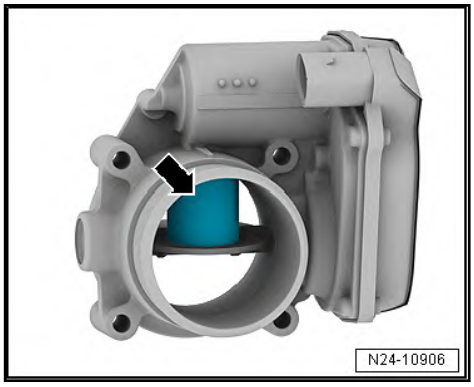

CAUTION

Risk of injury caused by acetone. Acetone is highly flammable and may cause eye and skin irritation.

– **Wear protective goggles.**

– **Wear protective gloves.**

– Clean throttle valve housing thoroughly, especially around the points -arrows- where the throttle valve closes, using commercially available acetone and a small brush.

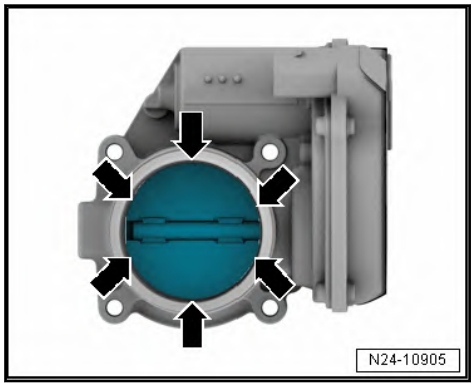

- Wipe the inside of the throttle valve housing with a lint-free cloth.
- Allow acetone to dry off completely.
- Install throttle valve module -GX3- ⇒ page 267 .
- After throttle valve control module -GX3- has been replaced, it must be re-adapted to engine control unit -J623-.
- Connect a ⇒ Vehicle diagnostic tester.
- Switch on ignition, and select and carry out following menu options on⇒ Vehicle diagnostic tester:

◆ `0001 - Clear learnt values`

◆ `0001 - Adaption of throttle valve module - J338`

5 Senders and sensors

⇒ a5.1 nd installing intake manifold senderGX9", page 271

5.1 Removing and installing intake manifold sender -GX9-

Intake manifold sender -GX9- consists of:

- Intake air temperature sender 2 -G299-
- Intake manifold pressure sender -G71-

Special tools and workshop equipment required

- Torque wrench -V.A.G 1783-

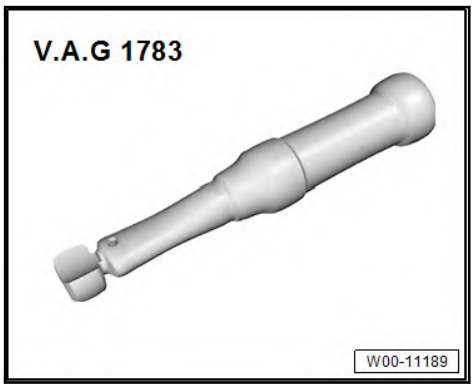

Removing

– Release and pull off connector on intake manifold sender -GX9- -2-.

– Carefully release locking lug -arrow-, and remove intake manifold sender -GX9- -2-.

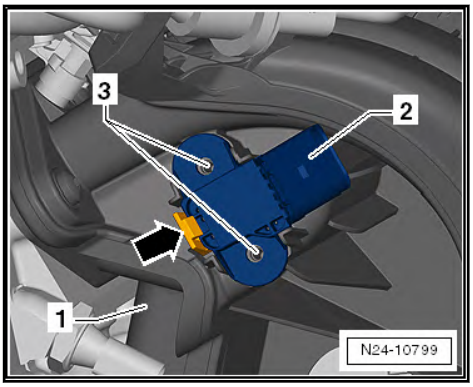

Note

- *If lug -arrow- breaks off, securing bolts ⇒ Electronic Parts Catalogue (ETKA) may be used instead.*
- *The intake manifold sender -GX9- -2- may then also be bolted to intake manifold -1-.*
- *In this case unscrew the bolts from holes -3-.*

Installing

Install in reverse order of removal. When doing this, observe the following:

– Check seal for damage and renew if necessary.

Ensure that intake manifold sender -GX9- is properly seated and securely engaged in intake manifold.

Note

- *The intake manifold sender -GX9- may also be bolted to intake manifold -1-.*
- *Observe allocation of bolts ⇒ Electronic Parts Catalogue (ETKA).*

Torque settings

Component	Torque setting
Intake manifold sender -GX9- to intake manifold	3 Nm

6 Engine control unit

⇒ o6.1 verview – motor control unit", page 273

⇒ a6.2 nd installing engine control unitJ623", page 274

⇒ a6.3 nd installing engine (motor) control unitJ623 with protective housing", page 278

6.1 Assembly overview – motor control unit

⇒ o6.1.1 verview – engine control unit, in engine compartment", page 273

⇒ o6.1.2 verview – engine control unit, in wing", page 273

6.1.1 Assembly overview – engine control unit, in engine compartment

1 - Bracket

- ❑ Bracket secured to battery tray

2 - Bolt without theft protection

- ❑ For vehicle without theft protection
- ❑ Installed on left and right
- ❑ Allocation ⇒ Electronic parts catalogue (ETKA)
- ❑ 9 Nm

3 - Engine control unit -J623-

- ❑ Removing and installing without theft protection ⇒ page 274
- ❑ Removing and installing with theft protection ⇒ page 278

4 - Rivets

- ❑ For securing bracket to engine control unit
- ❑ Allocation ⇒ Electronic parts catalogue (ETKA)

5 - Bolt with theft protection

- ❑ For vehicles with theft protection
- ❑ Installed on left and right
- ❑ Tighten shear-head screws evenly until head shears off.
- ❑ Allocation ⇒ Electronic parts catalogue (ETKA)

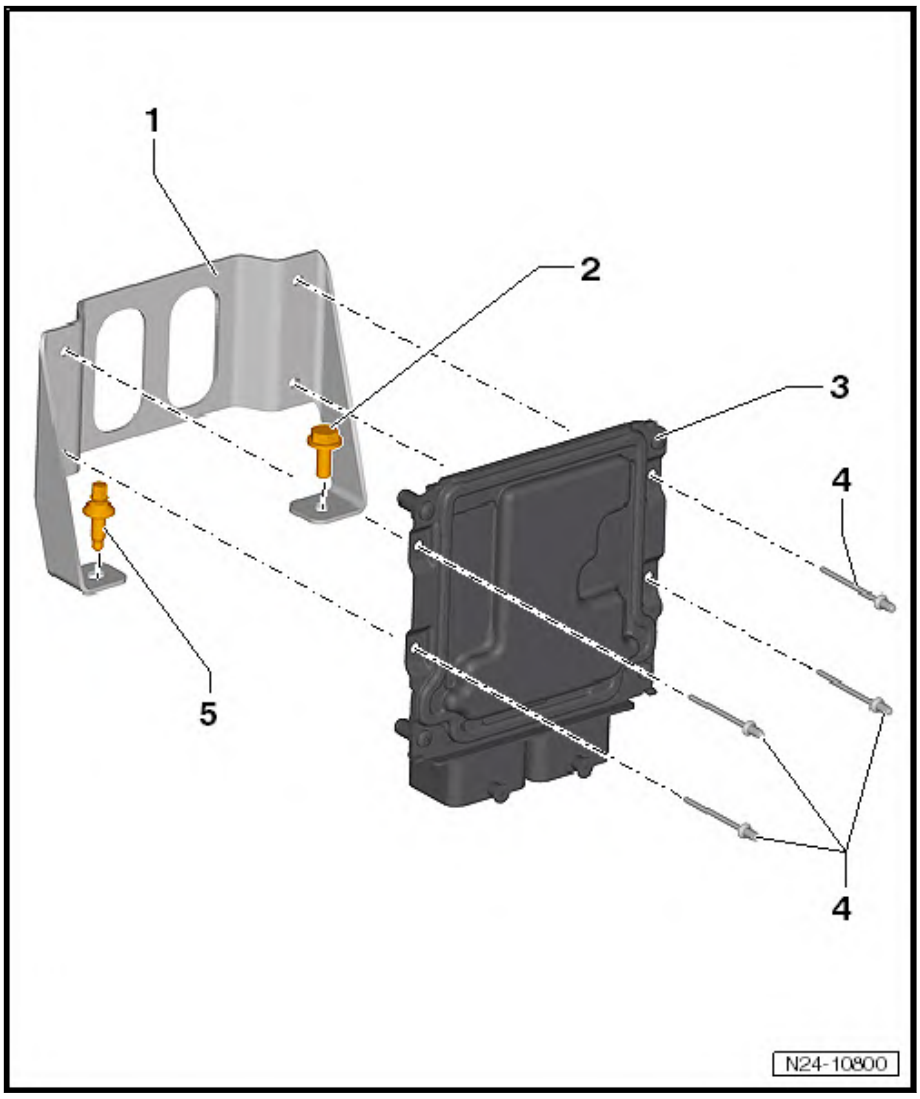

6.1.2 Assembly overview – engine control unit, in wing

1 - Bracket

2 - Engine control unit -J623-

- ❑ Removing and installing ⇒ page 276

3 - Bolt

- ❑ 9 Nm

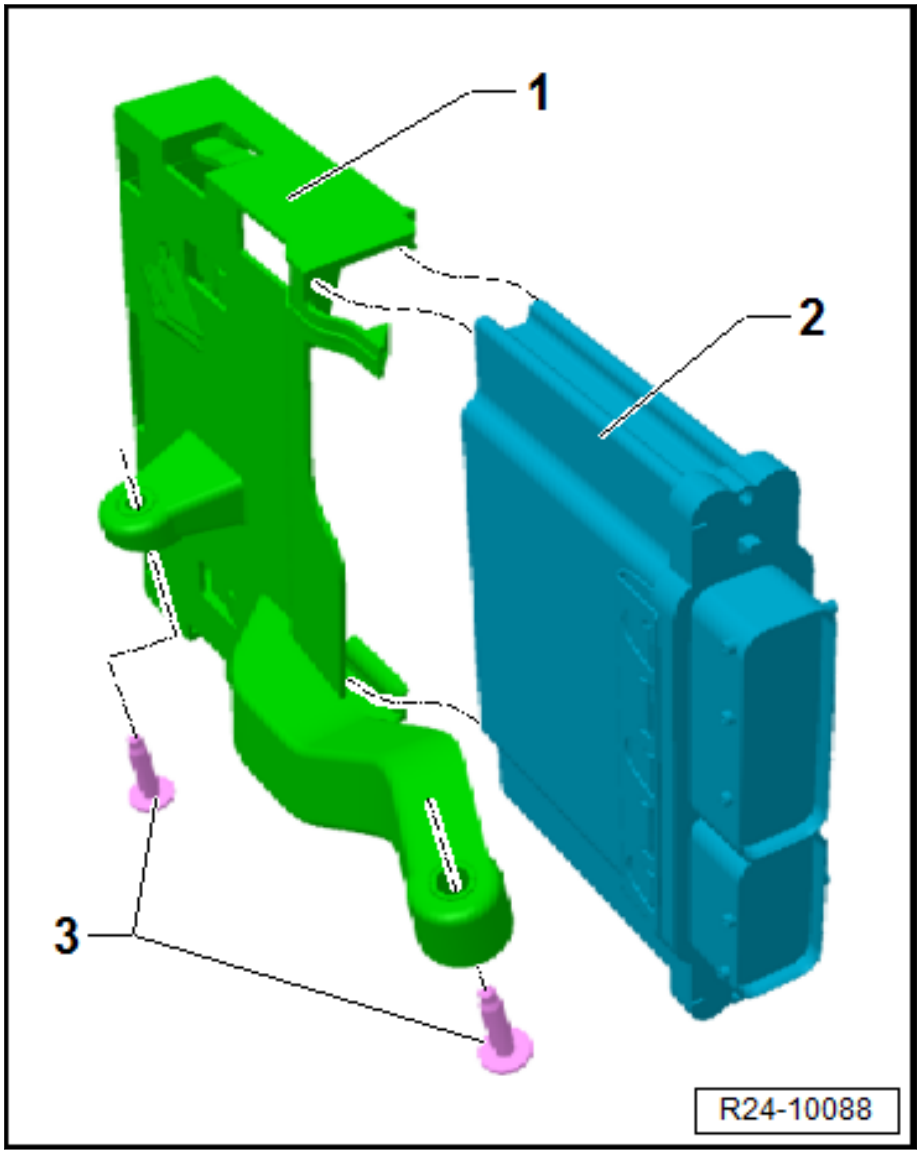

6.2 Removing and installing engine control unit -J623-

⇒ a6.2.1 nd installing engine control unitJ623, in engine compartment", page 274

⇒ a6.2.2 nd installing engine control unitJ623, in wing", page 276

6.2.1 Removing and installing engine control unit -J623-, in engine compartment

Special tools and workshop equipment required

- Torque wrench -V.A.G 1331-

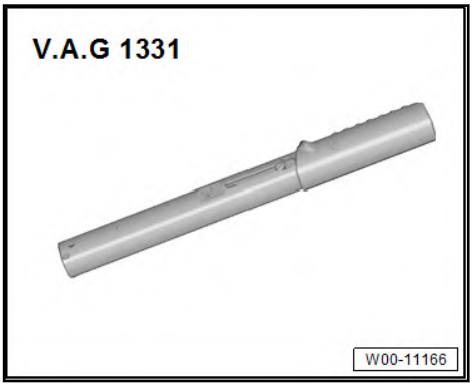

Removing

- If the engine control unit -J623- needs to be renewed, connect ⇒ Vehicle diagnostic tester, and perform function 0001 - Renew engine control unit.
- Switch off ignition.
- Remove battery ⇒ Electrical system; Rep. gr. 27; Battery; Removing and installing battery.
- Unscrew bolts -arrows- from battery tray -2-.

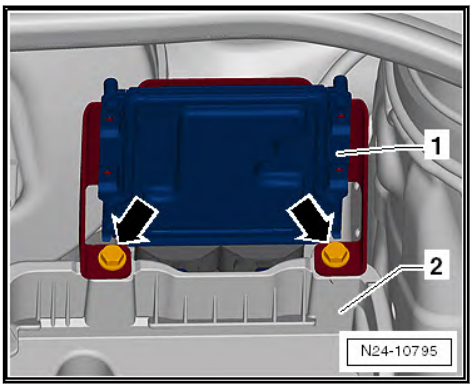

- Tilt engine control unit -1- forwards together with bracket.
- Push locking mechanism -1- with a screwdriver in -direction of arrow- and keep pushed.

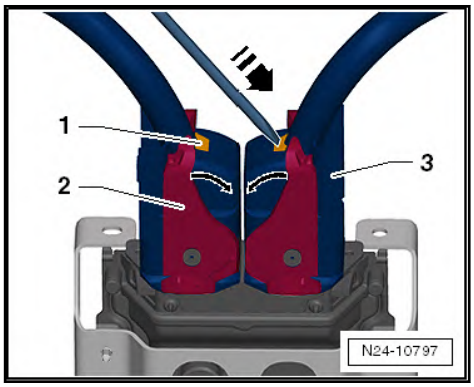

- Unlock connector -3- from engine control unit using locking bar -2-.
- To do this, push locking bar -2- in -direction of arrow-.
- Remove engine control unit together with bracket.

Installing

Install in reverse order of removal. When doing this, observe the following:

After installing a new engine control unit, the following operations must be performed:

– Connect ⇒ Vehicle diagnostic tester.

– Switch on ignition, and select and carry out following menu options on⇒ Vehicle diagnostic tester:

♦ `0001 - Renew engine control unit`

♦ `0001 - Adapt new engine control unit to immobiliser`

Torque settings

Component	Torque setting
Engine control unit to battery tray	9 Nm

♦ ⇒ Electrical system; Rep. gr. 27; Battery; Removing and installing battery.

6.2.2 Removing and installing engine control unit -J623-, in wing

Removing

– If engine control unit is renewed, select `0001 - Renew engine control unit` function in ⇒ Vehicle diagnostic tester.

– Switch off ignition and remove key from ignition lock.

– Remove front left wheel housing liner ⇒ General body repairs, exterior; Rep. gr. 66; Wheel housing liner; Assembly overview – front wheel housing liner.

– Unscrew bolts -arrows-.

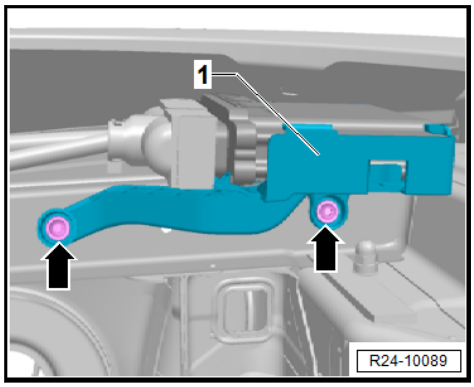

– Remove engine control unit -J623- with bracket -1-.

– Release and pull off connectors for engine (motor) control unit -J623-.

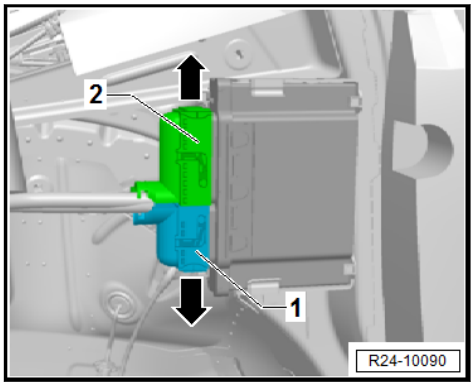

1 - Connector for vehicle wiring harness

2 - Connector for engine wiring harness

– To do this, pull out catch in direction of -arrow-.

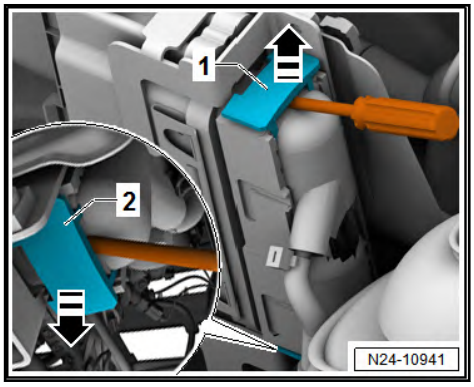

– Press down locking element -arrows-.

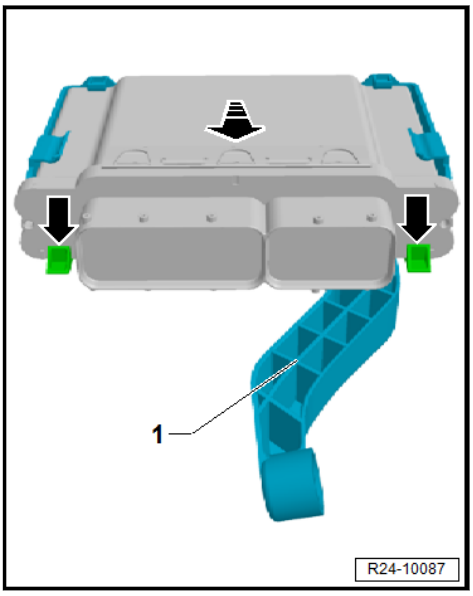

– Pull off engine control unit -J623- from bracket in direction of -arrow-.

Installing

Install in reverse order of removal, observing the following:

After installing a new engine control unit, the following operations must be performed:

– Connect ⇒ Vehicle diagnostic tester.

– Switch on ignition, select and execute following menu option on ⇒ Vehicle diagnostic tester:

♦ `0001 - Renew engine control unit`

Specified torque:

♦ ⇒ o6.1.2 verview – engine control unit, in wing", page 273

6.3 Removing and installing engine (motor) control unit -J623- with protective housing

Special tools and workshop equipment required

♦ Torque wrench -V.A.G 1331-

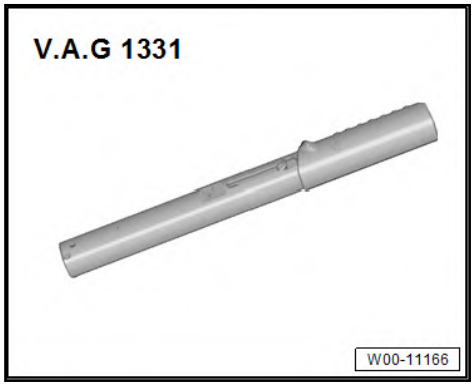

Removing

– If the engine control unit -J623- needs to be renewed, connect ⇒ Vehicle diagnostic tester, and perform function `0001 - Renew engine control unit`.

– Switch off ignition.

– Remove battery ⇒ Electrical system; Rep. gr. 27; Battery; Removing and installing battery.

– Remove shear-head bolts -arrows- with suitable workshop equipment.

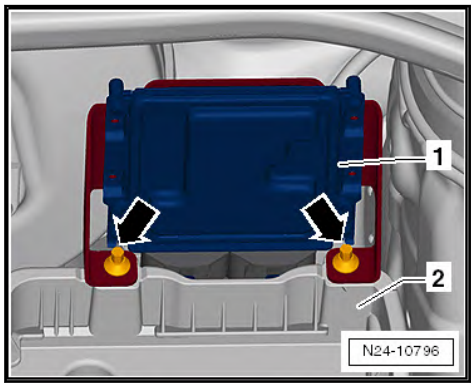

– Unscrew bolts -arrows- from battery tray -2-.

– Tilt engine control unit -1- forwards together with bracket.

– Push locking mechanism -1- with a screwdriver in -direction of arrow- and keep pushed.

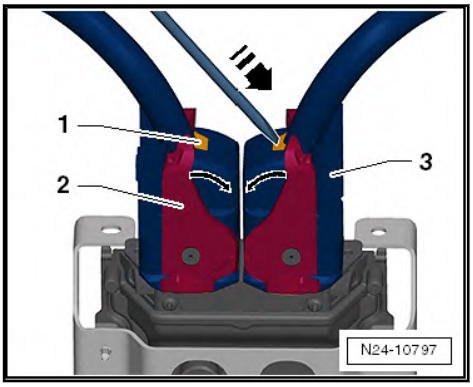

– Unlock connector -3- from engine control unit using locking bar -2-.
– To do this, push locking bar -2- in -direction of arrow-.
– Remove engine control unit together with bracket.

Installing

Install in reverse order of removal. The following should be observed:

– Tighten shear-head screws evenly until head shears off.

After installing a new engine control unit, the following operations must be performed:

– Connect ⇒ Vehicle diagnostic tester.
– Switch on ignition, and select and carry out following menu options on⇒ Vehicle diagnostic tester:

♦ `0001 - Renew engine control unit`

♦ `0001 - Adapt new engine control unit to immobiliser`

Torque settings

Component	Torque setting
Engine control unit to battery tray	9 Nm

♦ ⇒ Electrical system; Rep. gr. 27; Battery; Removing and installing battery.

7 Lambda probe

⇒ o7.1 verview - Lambda probe", page 280

⇒ a7.2 nd installing Lambda probe", page 284

7.1 Assembly overview - Lambda probe

⇒ o7.1.1 verview - lambda probe, vehicles with close-coupled emission control", page 280

⇒ o7.1.2 verview - lambda probe, vehicles with emission control on underbody", page 282

7.1.1 Assembly overview - lambda probe, vehicles with close-coupled emission control

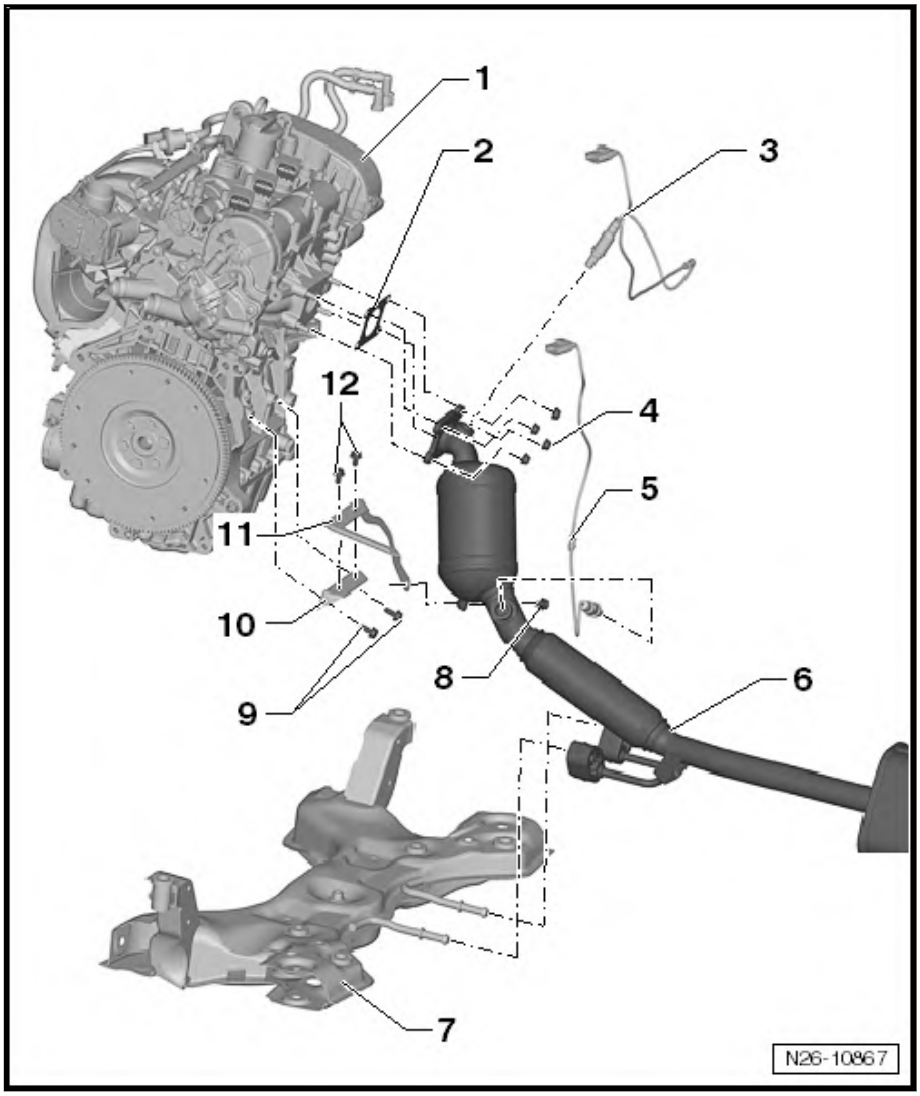

1 - Engine

2 - Seal

- ❑ Renew after removal

3 - Lambda probe 1 before catalytic converter -GX10-

Consisting of:

Lambda probe -G39-

Lambda probe heater -Z19-

- ❑ Grease only the threads with "G 052 112 A3"; "G 052 112 A3" cannot get into the slots on the probe body.
- ❑ Removing and installing ⇒ a7.2.1 nd installing Lambda probe 1 before catalytic converterGX10", page 284
- ❑ If seal is leaking, nip open and renew.
- ❑ 50 Nm

4 - Nut

- ❑ Observe assembling procedure ⇒ page 298
- ❑ 23 Nm

5 - Lambda probe 1 after catalytic converter -GX7-

Consisting of:

Lambda probe after catalytic converter -G130-

Lambda probe 1 heater after catalytic converter -Z29-

- ❑ Grease only the threads with "G 052 112 A3"; "G 052 112 A3" cannot get into the slots on the probe body.
- ❑ Removing and installing ⇒ a7.2.2 nd installing Lambda probe 1 after catalytic converterGX7", page 285
- ❑ If seal is leaking, nip open and renew.
- ❑ 50 Nm

6 - Front exhaust pipe

- ❑ Removing and installing ⇒ page 299

7 - Subframe with bracket

- ❑ Removing and installing ⇒ Running gear, axles, steering; Rep. gr. 40; Subframe; Removing and installing subframe without steering rack.

8 - Bolt

- ❑ Catalytic converter to bracket
- ❑ 23 Nm

9 - Bolt

- ❑ Bracket to cylinder block
- ❑ 23 Nm

10 - Bracket

- ❑ to cylinder block
- ❑ Observe assembling procedure ⇒ page 298

11 - Bracket

- ❑ Observe assembling procedure ⇒ page 298

12 - Bolt

- ❑ 23 Nm

7.1.2 Assembly overview - lambda probe, vehicles with emission control on underbody

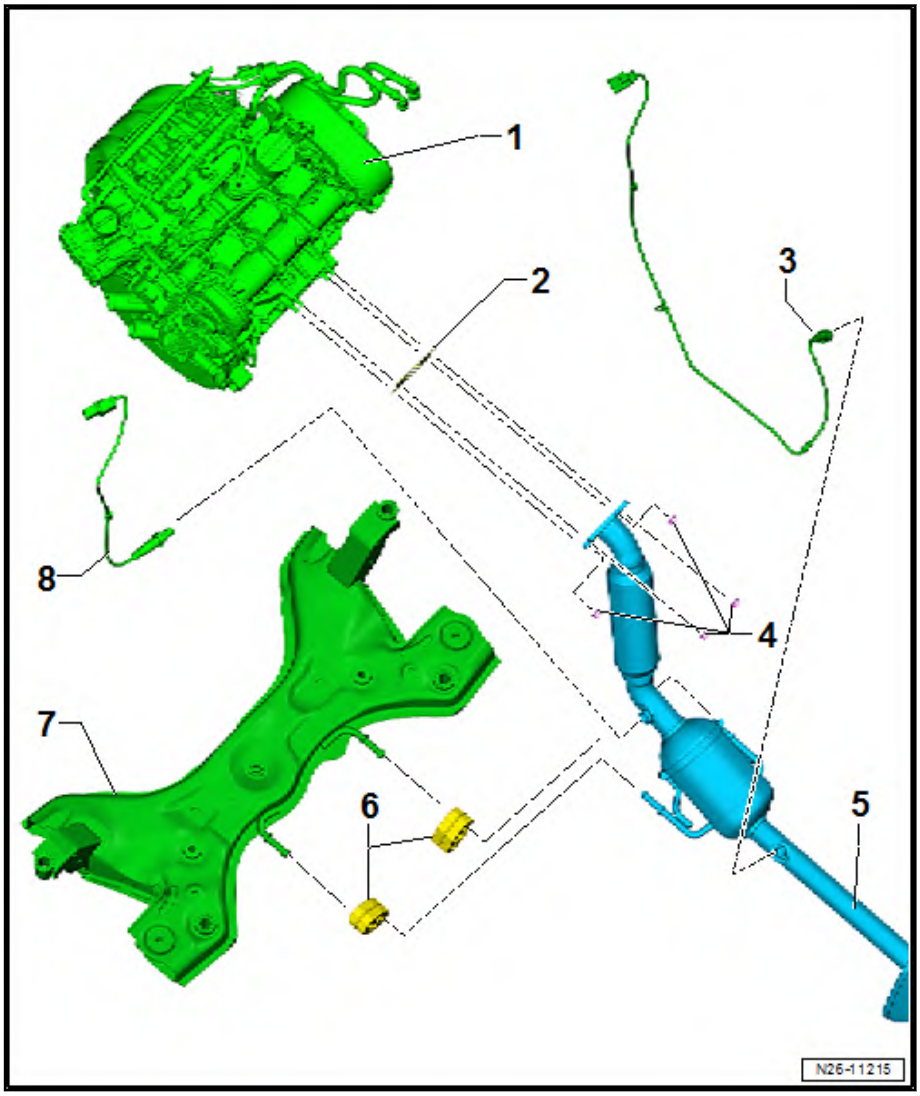

1 - Engine

2 - Seal

- ❑ Renew after removal

3 - Lambda probe 1 after catalytic converter -GX7-

Consisting of:

Lambda probe after catalytic converter -G130-

Lambda probe 1 heater after catalytic converter -Z29-

- ❑ Grease only the threads with “G 052 112 A3”; “G 052 112 A3” cannot get into the slots on the probe body.
- ❑ Removing and installing
- ❑ If seal is leaking, nip open and renew.
- ❑ 50 Nm

4 - Nut

- ❑ 23 Nm

5 - Front exhaust pipe

- ❑ Removing and installing ⇒ page 299

6 - Mounting

- ❑ Renew if damaged

7 - Subframe with bracket

- ❑ Removing and installing ⇒ Running gear, axles, steering; Rep. gr. 40; Subframe; Removing and installing subframe without steering rack.

8 - Lambda probe 1 before catalytic converter -GX10-

Consisting of:

Lambda probe -G39-

Lambda probe heater -Z19-

- ❑ Grease only the threads with “G 052 112 A3”; “G 052 112 A3” cannot get into the slots on the probe body.
- ❑ Removing and installing
- ❑ If seal is leaking, nip open and renew.
- ❑ 50 Nm

7.2 Removing and installing Lambda probe

⇒ a7.2.1 nd installing Lambda probe 1 before catalytic converterGX10", page 284

⇒ a7.2.2 nd installing Lambda probe 1 after catalytic converterGX7", page 285

⇒ a7.2.3 nd installing lambda probe, vehicles with emission control on underbody", page 286

7.2.1 Removing and installing Lambda probe 1 before catalytic converter -GX10-

Lambda probe 1 before catalytic converter -GX10- consists of

- Lambda probe -G39-
- Lambda probe heater -Z19-

Special tools and workshop equipment required

- Lambda probe open ring spanner set -3337-

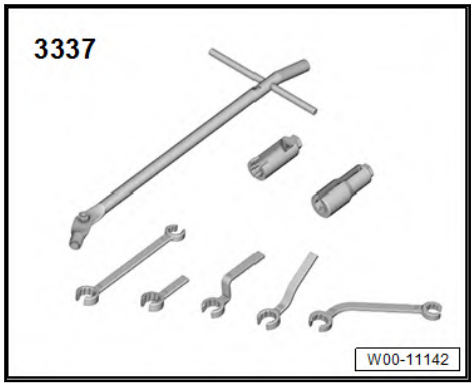

Removing

– Pull hose -1- off air filter housing.

– Remove air filter housing ⇒ page 260 .

– Release and pull off lower connectors of lambda probe 1 before catalytic converter -GX10- -arrow-.

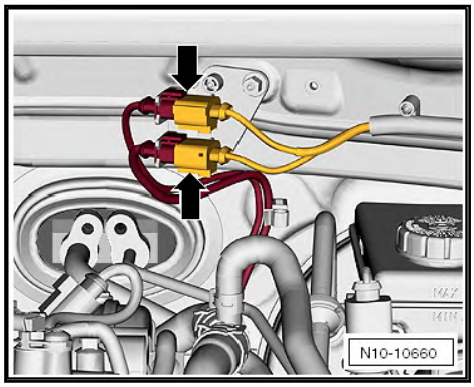

Steckerfarbe braun - Lambda probe 1 before catalytic converter -GX10-

Steckerfarbe schwarz - Lambda probe 1 after catalytic converter -GX7-

– Remove wiring harness from guides.

– Unscrew lambda probe 1 before catalytic converter -GX10- -1- from catalytic converter -2-.

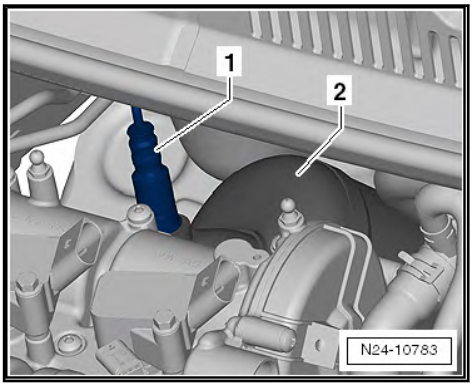

Installing

Install in reverse order of removal. When doing this, observe the following:

Grease only the threads with “G 052 112 A3”; “G 052 112 A3” must not get into the slots on the probe body.

If seal is leaking, nip open and renew.

Torque settings

- ⇒ o7.1 verview - Lambda probe”, page 280

7.2.2 Removing and installing Lambda probe 1 after catalytic converter -GX7-

Lambda probe 1 after catalytic converter -GX7- consists of

- Lambda probe after catalytic converter -G130-
- Lambda probe 1 heater after catalytic converter -Z29-

Special tools and workshop equipment required

- Lambda probe open ring spanner set -3337-

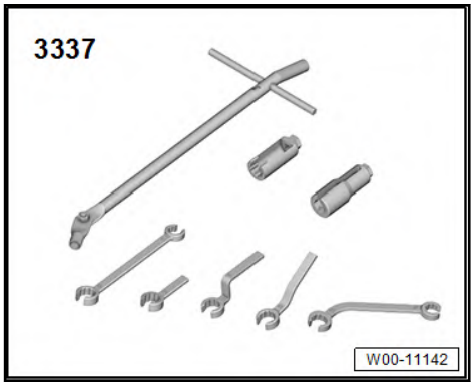

Removing

– Release and pull off upper connectors of lambda probe 1 after catalytic converter -GX7- -arrow-.

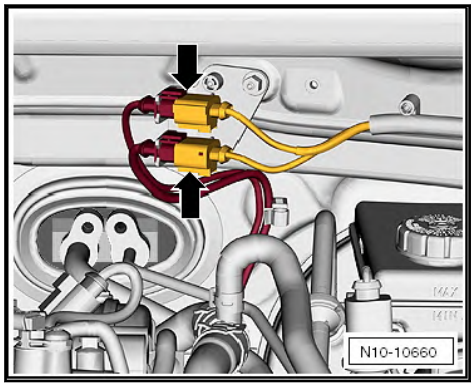

Steckerfarbe braun - Lambda probe 1 before catalytic converter -GX10-

Steckerfarbe schwarz - Lambda probe 1 after catalytic converter -GX7-

– Remove wiring harness from guides.
– Unscrew lambda probe 1 after catalytic converter -GX7- -1- from catalytic converter -2- from below.

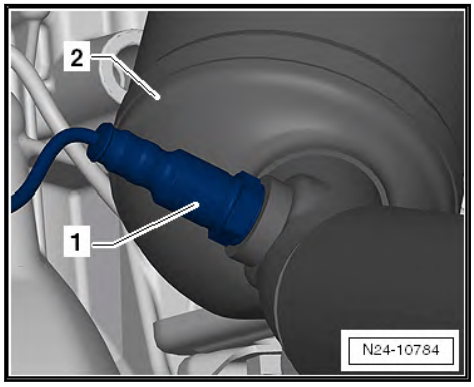

Installing

Install in reverse order of removal. When doing this, observe the following:

Grease only the threads with “G 052 112 A3”; “G 052 112 A3” must not get into the slots on the probe body.

If seal is leaking, nip open and renew.

Torque settings

♦ ⇒ o7.1 verview - Lambda probe”, page 280

7.2.3 Removing and installing lambda probe, vehicles with emission control on underbody

Special tools and workshop equipment required

- Lambda probe open ring spanner set -3337-

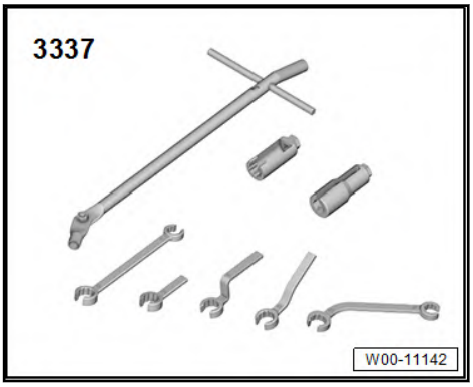

Removing

– Release and pull off relevant connectors -arrow-.

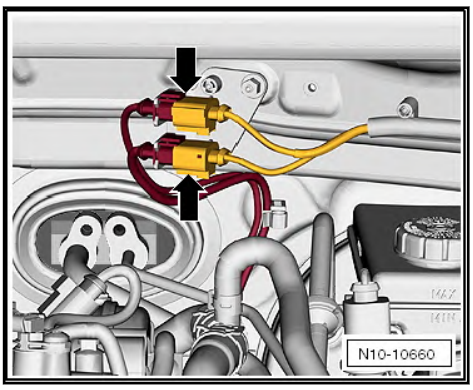

Steckerfarbe braun - Lambda probe 1 before catalytic converter -GX10-

Steckerfarbe schwarz - Lambda probe 1 after catalytic converter -GX7-

– Unclip connector from relevant bracket.

– Remove wiring harness from guides.

– Unscrew respective lambda probe from catalytic converter -1-.

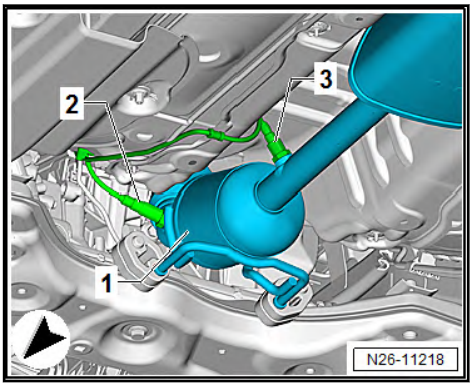

2 - Lambda probe 1 before catalytic converter -GX10-

3 - Lambda probe 1 after catalytic converter -GX7-

Installing

Install in reverse order of removal. When doing this, observe the following:

Grease only the threads with “G 052 112 A3”; “G 052 112 A3” must not get into the slots on the probe body.

If seal is leaking, nip open and renew.

Torque settings

- ⇒ o7.1 verview - Lambda probe”, page 280

26 – Exhaust system

1 Exhaust pipes and silencers

⇒ o1.1 verview – silencers", page 289

⇒ e1.2 xhaust pipes from silencers", page 290

⇒ a1.3 nd installing silencer", page 291

⇒ e1.4 xhaust system for leaks", page 293

⇒ p1.5 osition of clamp", page 294

1.1 Assembly overview – silencers

1 - Silencer with exhaust tail pipe

2 - Tunnel cross-piece

- ❑ Note installation position (mark before removal, if necessary).

3 - Nut

- ❑ 20 Nm

4 - Rear mounting

- ❑ Renew if damaged

5 - Bolt

- ❑ 23 Nm

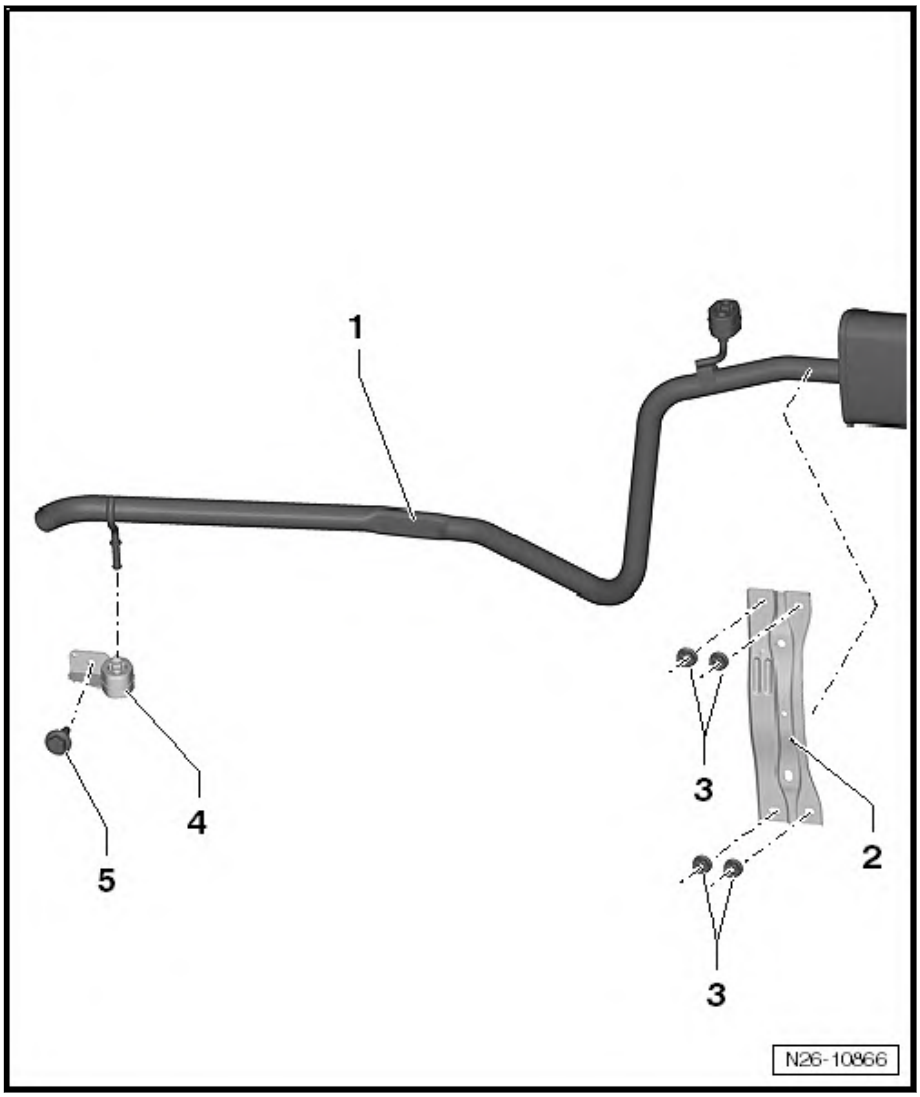

1.2 Separating exhaust pipes from silencers

Note

- *After working on the exhaust system, ensure that the system is not under tension*
- *and that there is sufficient clearance to the bodywork.*
- *If necessary, loosen double clamp(s). Align silencer and exhaust pipe so that sufficient clearance is maintained to the bodywork and the support rings are evenly loaded.*
- *Renew self-locking nuts.*
- *Before installing, coat threads of lock nuts and stud bolts with high-temperature paste -N 052.112.00- according to TL 521 12.*

Special tools and workshop equipment required

- Chain pipe cutter -VAS 6254-

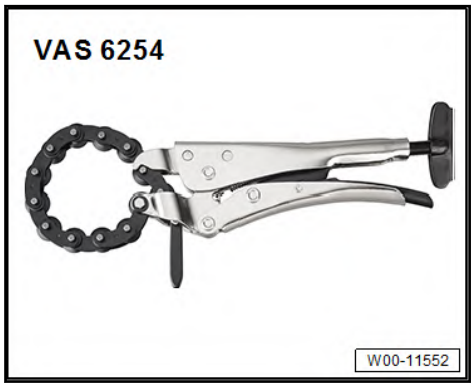

- Pneumatic sabre saw -V.A.G 1523A-

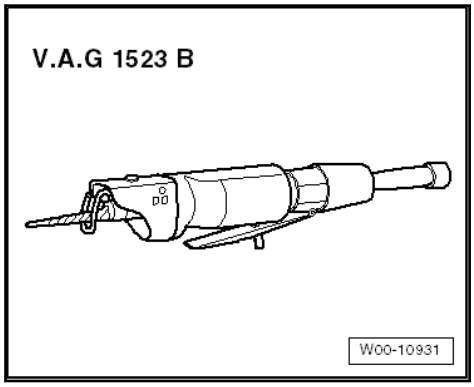

- Torque wrench -V.A.G 1331-

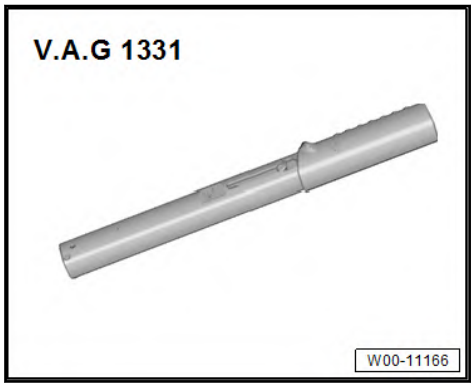

CAUTION

Risk of injury from swarf being flung into air.
Irritation and injury to skin and eyes possible.
- **Wear protective goggles.**
- **Wear protective gloves.**

- Separating points are provided in the exhaust system for the individual removal of exhaust system parts.
- The separating points are indicated with markings on the outside of the exhaust pipe.

Separating point on the front silencer

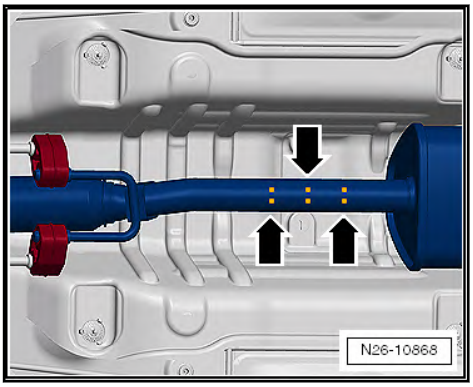

- Cut through exhaust pipe at centre separating point -upper arrow- at right angles, e.g. with pneumatic sabre saw -V.A.G 1523A- or chain pipe cutter -VAS 6254-.
- Position repair double clamp centrally between outer markings -lower arrow-.
- Take installation position of clamp into account ⇒ p1.5 osition of clamp", page 294 .

Separating point on exhaust pipe

- Cut through exhaust pipe at centre separating point -right arrow- at right angles e.g. with pneumatic sabre saw -V.A.G 1523A- or chain pipe cutter -VAS 6254-.
- Position repair double clamp centrally between outer markings -left arrow-.

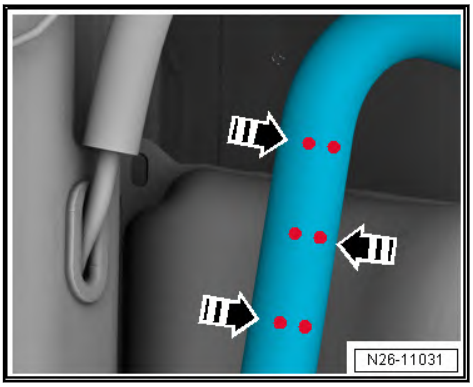

- Take installation position of clamp into account ⇒ p1.5 osition of clamp", page 294 .

1.3 Removing and installing silencer

Special tools and workshop equipment required

♦ Torque wrench -V.A.G 1331-

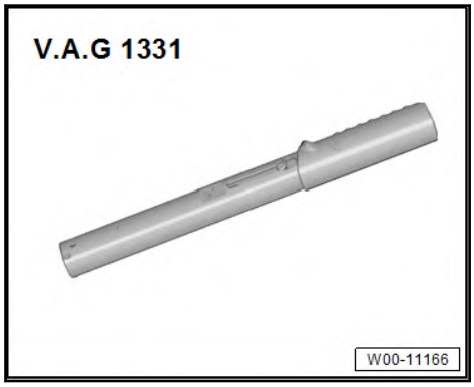

Removing

– If necessary, disconnect exhaust system ⇒ e1.2 xhaust pipes from silencers", page 290 .

– If fitted, loosen clamp -arrows-.

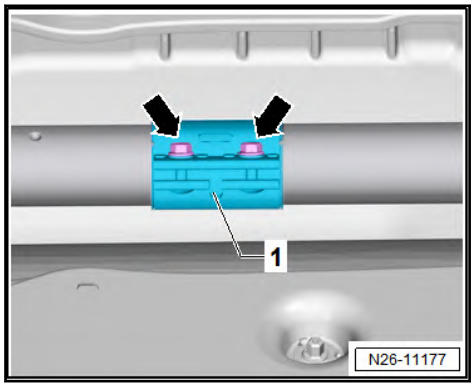

– Remove cross strut -1- from underbody.

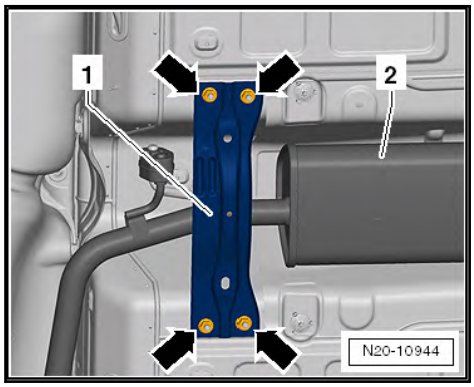

– Remove nuts -arrows-

– Remove rear bracket -1- for exhaust system -2-.

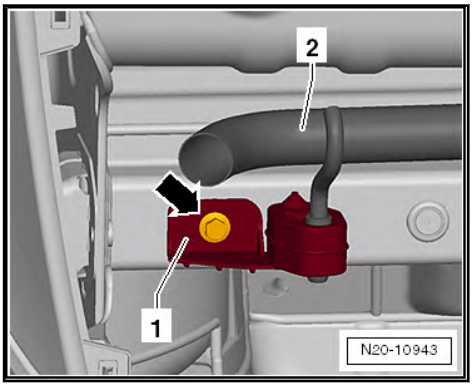

– Unscrew bolt -arrow-.

Note

The aid of a 2nd mechanic is required to remove the silencer.

– Remove silencer.

Installing

Install in reverse order of removal. When doing this, observe the following:

Note installation position of clamp ⇒ p1.5 osition of clamp", page 294 .

Note

- *After working on the exhaust system, ensure that the system is not under stress and that there is sufficient clearance to the bodywork. If necessary, loosen double clamp and align silencer and exhaust pipe so that sufficient clearance is maintained to the bodywork and the support rings are evenly loaded.*
- *Renew self-locking nuts.*
- *Before installing, coat threads of lock nuts and stud bolts with high-temperature paste -N 052.112.00- according to TL 521 12.*

Specified torque:

Component	Torque setting
Nuts	⇒ o1.1 verview – silencers", page 289
Bolt	23 Nm

1.4 Checking exhaust system for leaks

Procedure

– Start engine and run it at idling speed.

– Seal end exhaust pipes with cloths or plugs, for example, for the duration of the leakage test.

– Check (by listening) points of connection between exhaust manifold and the cylinder head, between turbocharger and front exhaust pipe etc. to make sure there are no leaks.

– Repair any leaks found.

1.5 Installation position of clamp

Note

Note introduction of clamps with continuous clip.

Specified torque and mounting dimensions of clamping sleeve.

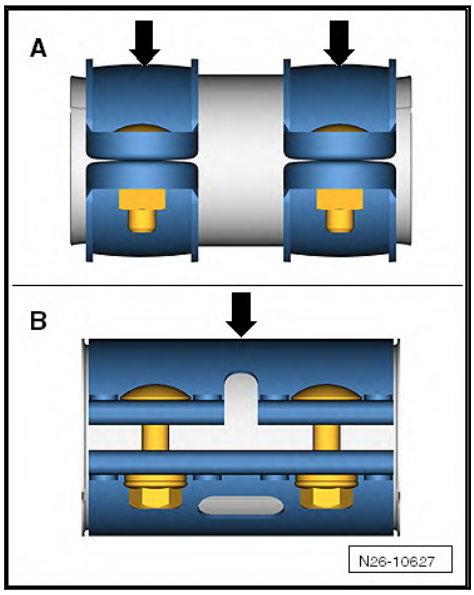

Clamp -A- with 2 individual clips.

Specified torque: 25 Nm.

Installation dimensions -a- 5 mm (only for front clamp)

Clamp -B- with continuous clip.

Specified torque 35 Nm

Installation dimensions -a- 8.5 mm (only for front clamp)

Installation dimension -a- for vehicles with marking on front exhaust pipe

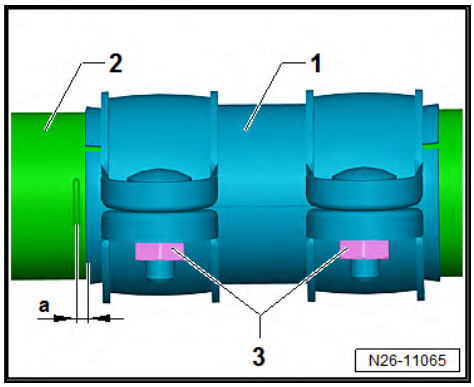

1 - Clamping sleeve

2 - Front exhaust pipe

3 - Securing nut

a - Installation dimension

Installation position of front clamp

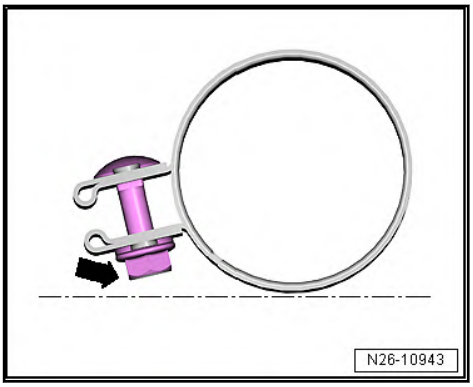

– Install clamping sleeve so that end of bolt -arrow- does not extend beyond lower edge of clamping sleeve.

- Threaded connection faces right

Installation position of rear clamp

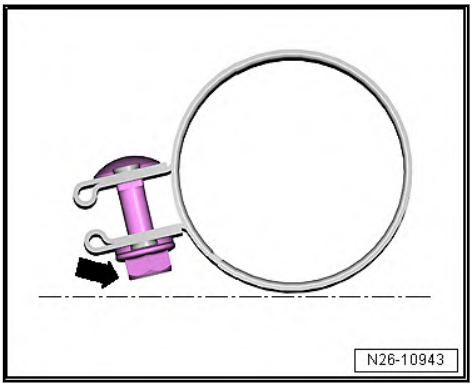

– The clamp should be installed such that the markings on the exhaust pipe -arrow- align with the ends of the clamp.

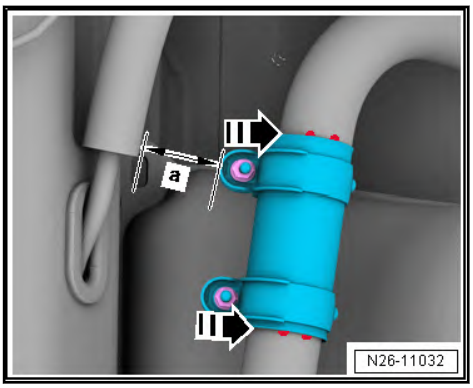

- Bolted connection must point forwards.
- Dimension -a- =26.5 mm must be observed.

2 Emission control

⇒ o2.1 verview – emission control", page 296

⇒ a2.2 nd installing catalytic converter", page 299

2.1 Assembly overview – emission control

⇒ o2.1.1 verview - emission control, vehicles with close-coupled emission control", page 296

⇒ o2.1.2 verview - emission control, vehicles with emission control on underbody", page 298

2.1.1 Assembly overview - emission control, vehicles with close-coupled emission control

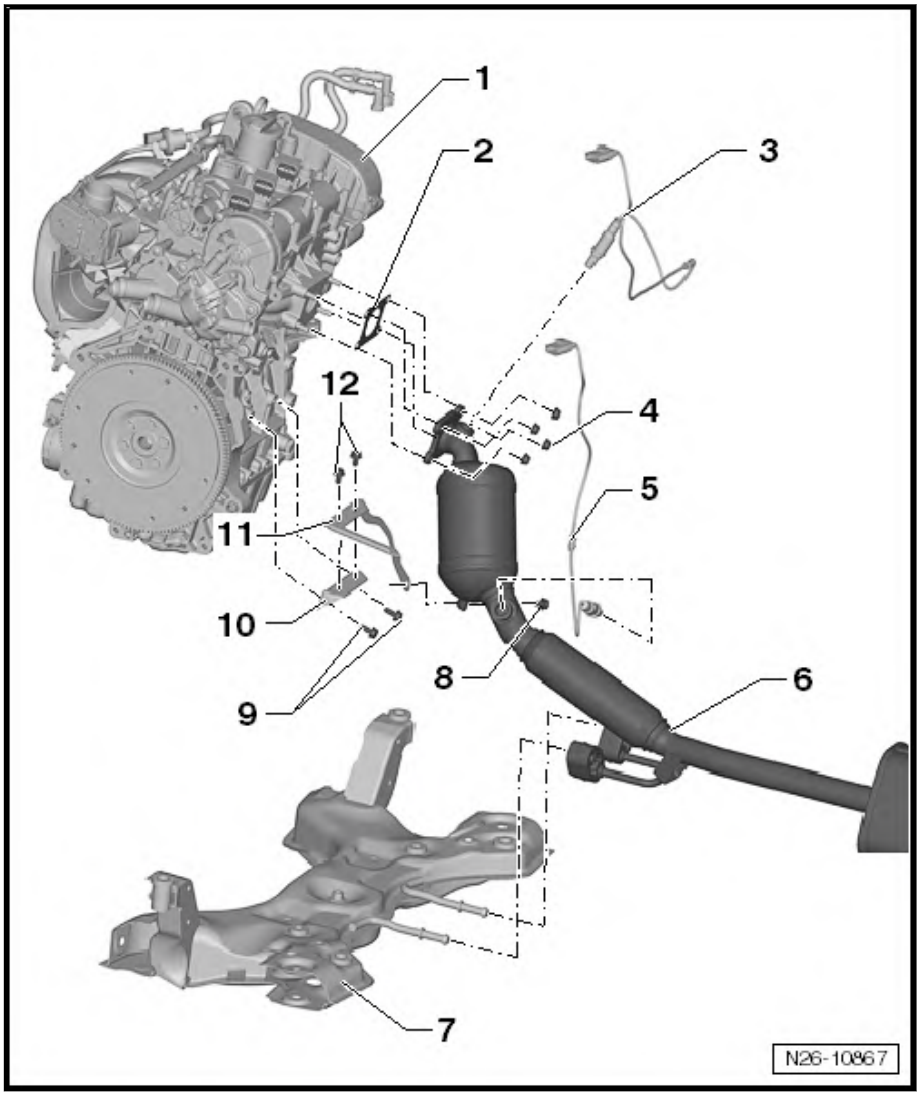

1 - Engine

2 - Seal

- ❑ Renew after removal

3 - Lambda probe 1 before catalytic converter -GX10-

Consisting of:

Lambda probe -G39-

Lambda probe heater -Z19-

- ❑ Grease only the threads with "G 052 112 A3"; "G 052 112 A3" cannot get into the slots on the probe body.
- ❑ Removing and installing ⇒ a7.2.1 nd installing Lambda probe 1 before catalytic converterGX10", page 284
- ❑ If seal is leaking, nip open and renew.
- ❑ 50 Nm

4 - Nut

- ❑ Observe assembling procedure ⇒ page 298
- ❑ 23 Nm

5 - Lambda probe 1 after catalytic converter -GX7-

Consisting of:

Lambda probe after catalytic converter -G130-

Lambda probe 1 heater after catalytic converter -Z29-

- ❑ Grease only the threads with "G 052 112 A3"; "G 052 112 A3" cannot get into the slots on the probe body.
- ❑ Removing and installing ⇒ a7.2.2 nd installing Lambda probe 1 after catalytic converterGX7", page 285
- ❑ If seal is leaking, nip open and renew.
- ❑ 50 Nm

6 - Front exhaust pipe

- ❑ Removing and installing ⇒ page 299

7 - Subframe with bracket

- ❑ Removing and installing ⇒ Running gear, axles, steering; Rep. gr. 40; Subframe; Removing and installing subframe without steering rack.

8 - Bolt

- ❑ Catalytic converter to bracket
- ❑ 23 Nm

9 - Bolt

- ❑ Bracket to cylinder block
- ❑ 23 Nm

10 - Bracket

- ❑ to cylinder block
- ❑ Observe assembling procedure ⇒ page 298

11 - Bracket

- ❑ Observe assembling procedure ⇒ page 298

12 - Bolt

- ❑ 23 Nm

Note

Before installing, coat threads of lock nuts and stud bolts with high-temperature paste -N 052.112.00- according to TL 521 12.

Assembly sequence for mounting catalytic converter to cylinder head

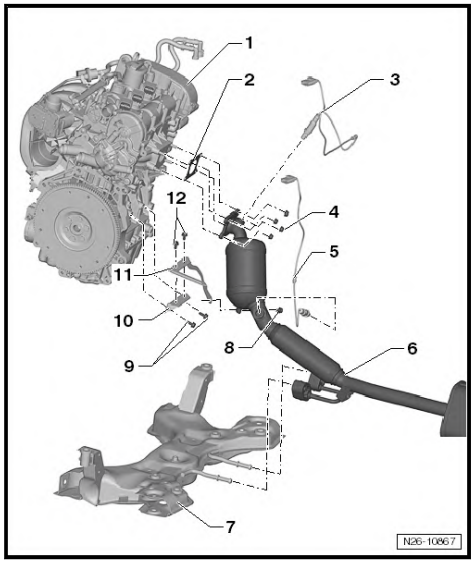

Tightening sequence:

Step (sequence)	Component	Torque setting
1)	Secure bracket -10- to cylinder head.	23 Nm
2)	Loosely bolt bracket -11- to bracket -10-	
3)	Guide gasket -2- onto stud	
4)	Screw on nuts -4- by 2 to 3 full turns	
5)	Tighten the three nuts -4-	23 Nm
6)	Screw bolt -8- onto bracket -11- through hole in catalytic converter	
7)	Tighten bolt -8-	23 Nm
8)	Secure brackets -10- and -11- with bolts -12-	23 Nm
9)	Tighten 4th nut -4-	23 Nm

2.1.2 Assembly overview - emission control, vehicles with emission control on underbody

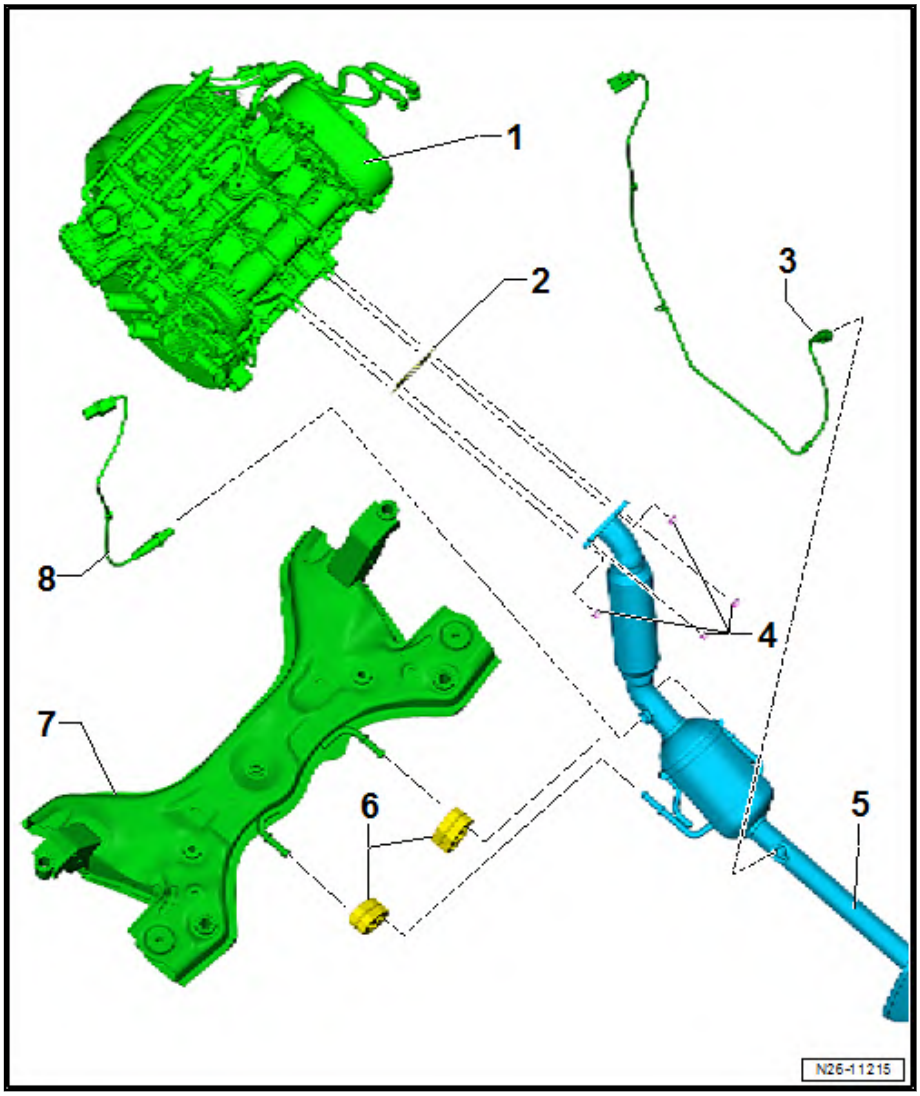

1 - Engine

2 - Seal

- ❑ Renew after removal

3 - Lambda probe 1 after catalytic converter -GX7-

- ❑ Grease only the threads with “G 052 112 A3”; “G 052 112 A3” cannot get into the slots on the probe body.
- ❑ Removing and installing
- ❑ If seal is leaking, nip open and renew.
- ❑ 50 Nm

4 - Nut

- ❑ 23 Nm

5 - Front exhaust pipe

- ❑ Removing and installing ⇒ page 299

6 - Mounting

- ❑ Renew if damaged

7 - Subframe with bracket

- ❑ Removing and installing ⇒ Running gear, axles, steering; Rep. gr. 40; Subframe; Removing and installing subframe without steering rack.

8 - Lambda probe 1 before catalytic converter -GX10-

- ❑ Grease only the threads with “G 052 112 A3”; “G 052 112 A3” cannot get into the slots on the probe body.
- ❑ Removing and installing
- ❑ If seal is leaking, nip open and renew.
- ❑ 50 Nm

2.2 Removing and installing catalytic converter

Special tools and workshop equipment required

♦ Torque wrench -V.A.G 1331-

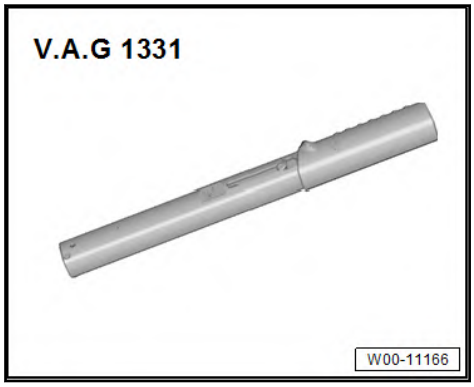

Removing

– Release and pull off connectors of lambda probes -arrows-.

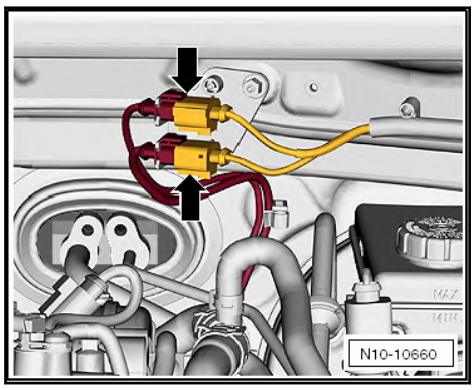

Steckerfarbe braun - Lambda probe 1 before catalytic converter -GX10-

Steckerfarbe schwarz - Lambda probe 1 after catalytic converter -GX7-

– Unclip connector from relevant bracket.

– Remove wiring harness from guides.

– If necessary, disconnect exhaust system ⇒ e1.2 xhaust pipes from silencers", page 290 .

– If fitted, loosen clamp -arrows-.

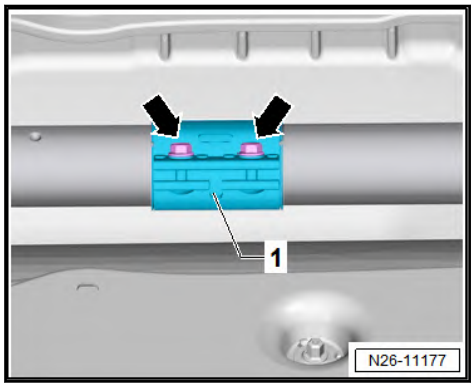

– Remove securing nuts -arrows- and pull catalytic converter off stud bolts.

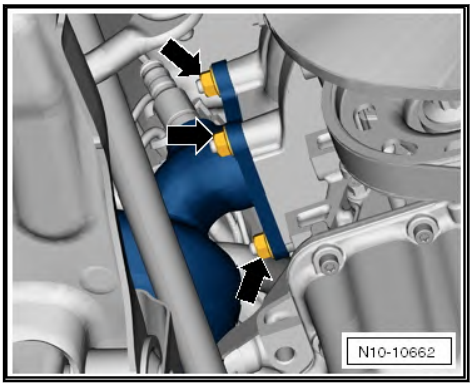

Note

Qty. 4 ⇒ Item 4 (page 297) .

Vehicles with close-coupled emission control:

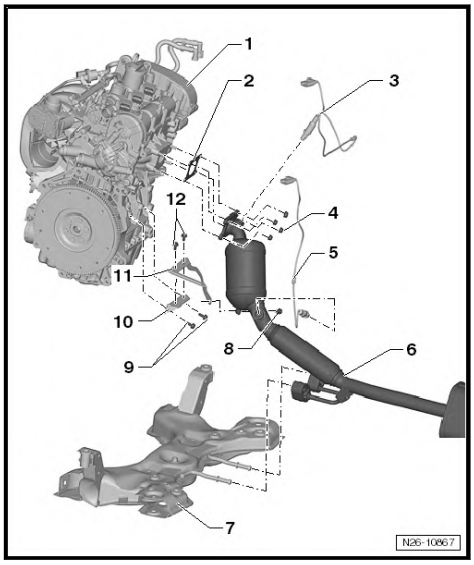

– Unscrew bolt -8-.
– Unscrew securing bolts -1-.

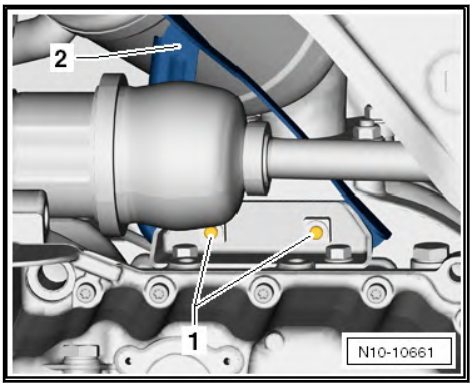

– Remove retainer -2-.

Continued for all vehicles:

– Pull retaining rings -1- for exhaust pipe off subframe -2-.

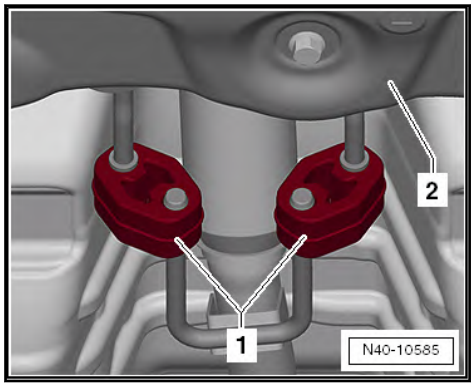

Installing

Install in reverse order of removal. When doing this, observe the following:

Adhere to assembling sequence ⇒ page 298 .

Note installation position of clamp ⇒ p1.5 osition of clamp", page 294 .

Note

- *After working on the exhaust system, ensure that the system is not under stress and that there is sufficient clearance to the bodywork. If necessary, loosen double clamp and align silencer and exhaust pipe so that sufficient clearance is maintained to the bodywork and the support rings are evenly loaded.*
- *Renew self-locking nuts.*
- *Before installing, coat threads of lock nuts and stud bolts with high-temperature paste -N 052.112.00- according to TL 521 12.*

Specified torque:

Component	Torque setting
Catalytic converter	⇒ o2.1 verview – emission control", page 296
Clamping sleeve	⇒ p1.5 osition of clamp", page 294

28 – Ignition system

1 Ignition system

1.1 Assembly overview - ignition system

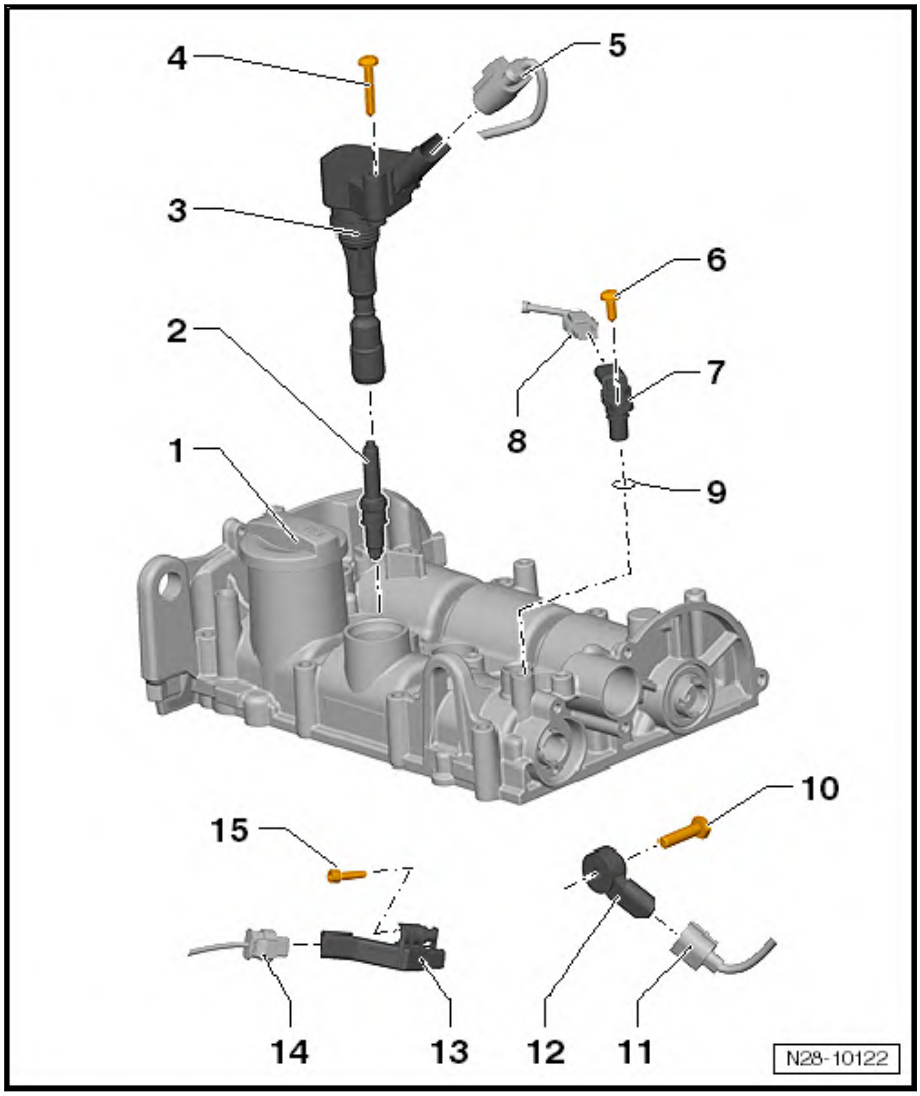

1 - Cylinder head cover

2 - Spark plug

- ❑ Remove and install with spark plug socket and extension -3122 B- ⇒ Maintenance; Booklet 819
- ❑ 22 Nm
- ❑ Change interval ⇒ Maintenance tables

3 - Ignition coil 1 with output stage -N70-

- ❑ Ignition coil 2 with output stage -N127-
- ❑ Ignition coil 3 with output stage -N291-
- ❑ Removing and installing ⇒ a1.2 nd installing ignition coils with output stage", page 305

4 - Bolt

- ❑ 8 Nm

5 - Connector

- ❑ black
- ❑ 4-pin

6 - Bolt

- ❑ For Hall sender -G40-.
- ❑ 10 Nm

7 - Hall sender -G40-

- ❑ Removing and installing ⇒ a1.4 nd installing Hall sender", page 309

8 - Connector

- ❑ black
- ❑ 3-pin
- ❑ For Hall sender -G40-.

9 - Seal

- ❑ Renew if damaged

10 - Bolt

- ❑ The specified torque influences the function of the knock sensor.
- ❑ 20 Nm

11 - Connector

- ❑ black
- ❑ 2-pin
- ❑ For knock sensor 1 -G61-.
- ❑ Connector contacts are gold-plated.

12 - Knock sensor 1 -G61-

- ❑ Removing and installing ⇒ a1.3 nd installing knock sensor 1G61", page 308
- ❑ Connector contacts are gold-plated.

13 - Engine speed sender -G28-

- ❑ Removing and installing ⇒ a1.5 nd installing engine speed senderG28", page 310

14 - Connector

- ❑ black
- ❑ 3-pin
- ❑ For engine speed sender -G28-

15 - Bolt

- ❑ For engine speed sender -G28-
- ❑ 8 Nm

1.2 Removing and installing ignition coils with output stage

Special tools and workshop equipment required

- ♦ Torque wrench -VAS 6854-

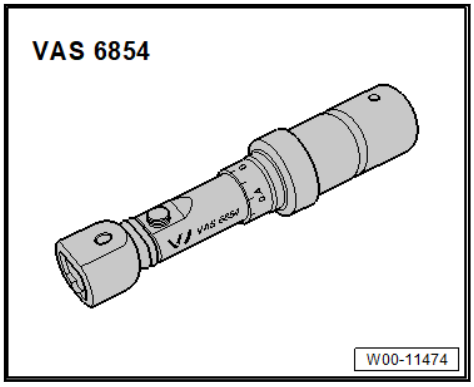

- ♦ Puller -T10530-

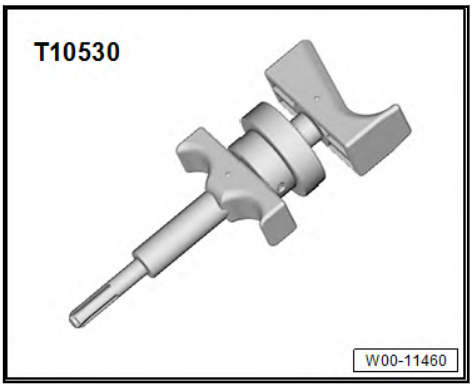

Note

- ♦ *The ignition coils are easier to remove when the engine is warm.*
- ♦ *The grease used during the first installation of the ignition coils will release the spark plug connectors more easily when the engine is warm.*
- ♦ *When installing used ignition coils with output stage, the ignition coils must be lubricated with silicone paste ⇒ Electronic parts catalogue (ETKA).*
- ♦ *Ignition coils with output stage and spark plug connectors are available individually for repairs ⇒ Electronic parts catalogue (ETKA)*

Removing

– Pull hose -1- off air filter housing.

– Pull air filter housing upwards off studs at positions -2- and -3-.

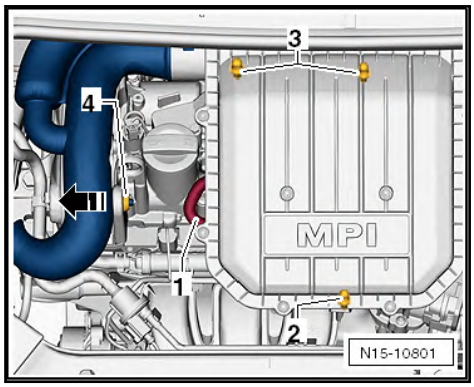

– Push air filter housing and intake connecting pipe in -direction of arrow- out of mounting -4-.

– Remove air filter housing from engine compartment.

– Release connector -1- and pull off.

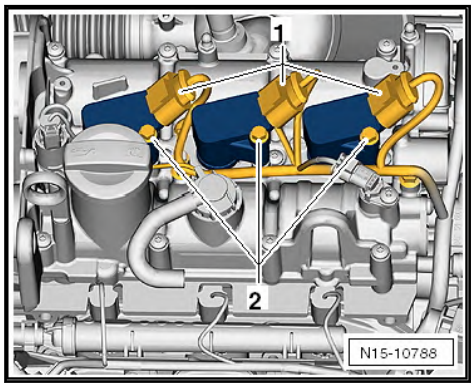

– Unscrew bolts -2-.

– Push puller -T10530- as far as stop into hole of ignition coil -1-.

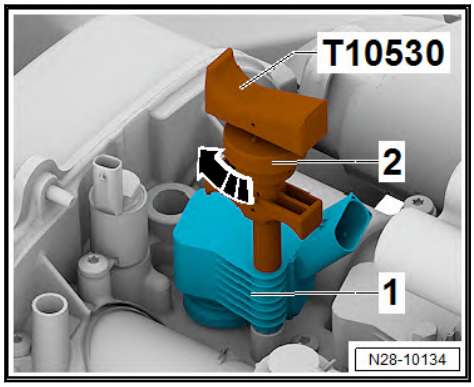

– Tighten knurled nut -2- in -direction of arrow-.

– Pull ignition coil on puller -T10530- in -direction of arrow- out of cylinder head cover.

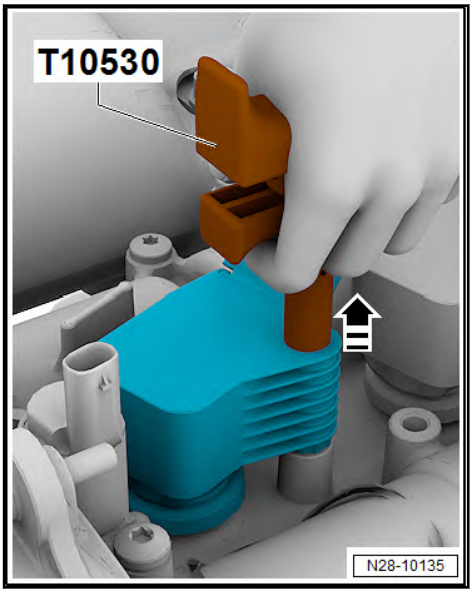

Installing

Install in reverse order of removal. When doing this, observe the following:

– Apply a thin bead of silicone paste around sealing hose of ignition coil ⇒ Electronic parts catalogue (ETKA).

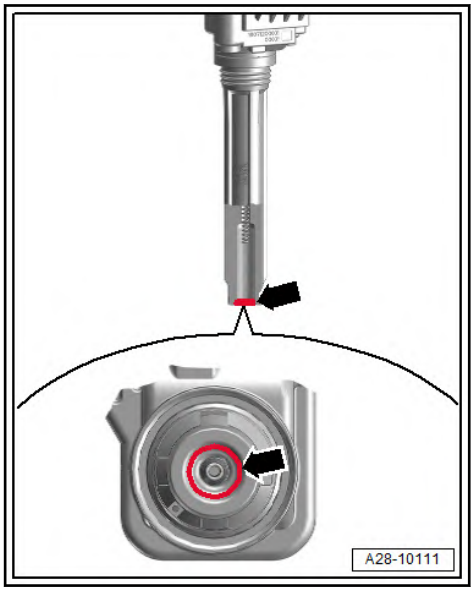

– Slide spark plug connector -1- by hand onto ignition coil as far as stop.

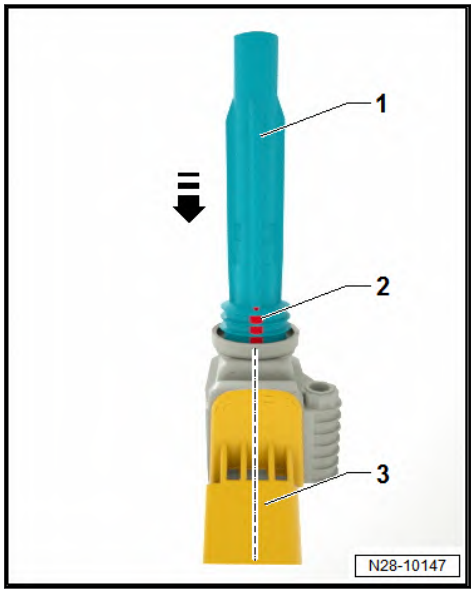

- The vent drilling -2- must be centred relative to connector housing -3- while doing so.

– Insert all ignition coils loosely into spark plug hole.

– Align ignition coils with connectors and simultaneously push all connectors onto ignition coils.

– Press ignition coils evenly onto spark plugs by hand (do not use tools).

– Using torque wrench -VAS 6854-, tighten securing bolt to specified torque ⇒ page 308 .

Torque settings

Component	Torque setting
Ignition coil with output stage	8 Nm

1.3 Removing and installing knock sensor 1 -G61-

Special tools and workshop equipment required

♦ Torque wrench -V.A.G 1331-

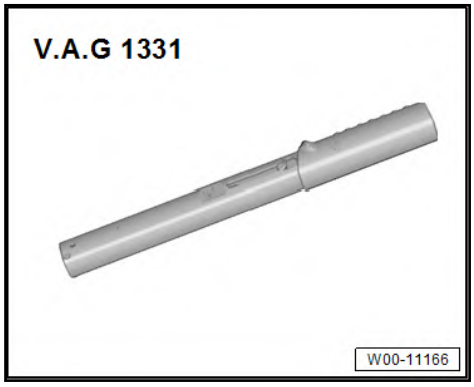

Removing

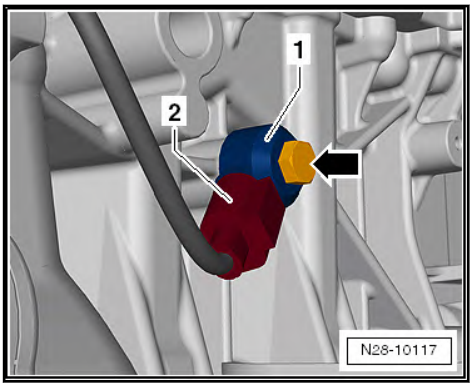

– Release connector -2- and pull off.

– Unscrew bolt -arrow- and remove knock sensor 1 -G61- -1- from engine.

Installing

Install in reverse order of removal. When doing this, observe the following:

The torque specification influences the function of knock sensor 1 -G61-.

Torque settings

Component	Torque setting
Knock sensor 1 -G61-	20 Nm

1.4 Removing and installing Hall sender

Special tools and workshop equipment required

♦ Torque wrench -V.A.G 1331-

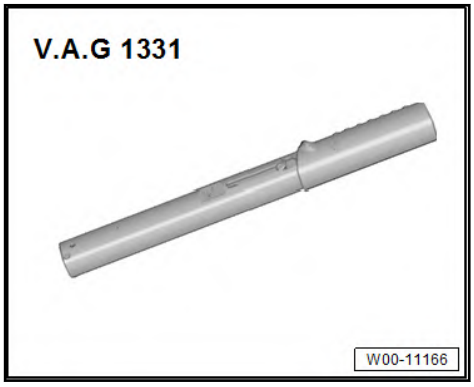

Removing

Fitting location of Hall sender -G40- ⇒ Item 5 (page 70) .

– Pull hose -1- off air filter housing.

– Pull air filter housing upwards off studs at positions -2- and -3-.

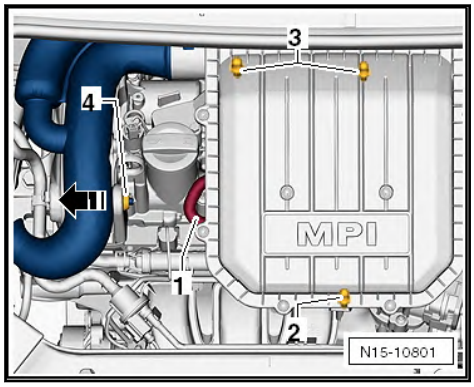

– Push air filter housing and intake connecting pipe in -direction of arrow- out of mounting -4-.
– Remove air filter housing from engine compartment.
– Release connector -2- and pull off.

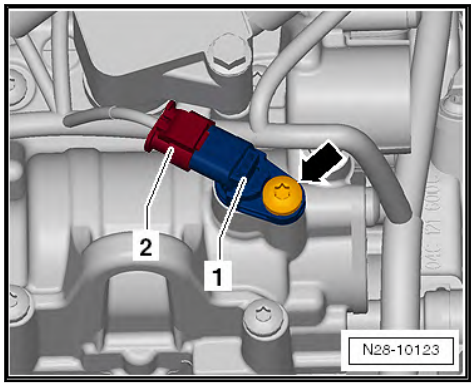

– Unscrew bolt -arrow-.
– Remove Hall sender -G40- -1-.

Installing

Install in reverse order of removal. When doing this, observe the following:

Renew seal ⇒ Item 9 (page 304) if damaged.

Torque settings

Component	Torque setting
Hall sender -G40-	10 Nm
Air filter	⇒ f3 ilter", page 260

1.5 Removing and installing engine speed sender -G28-

Special tools and workshop equipment required

- Torque wrench -V.A.G 1331-

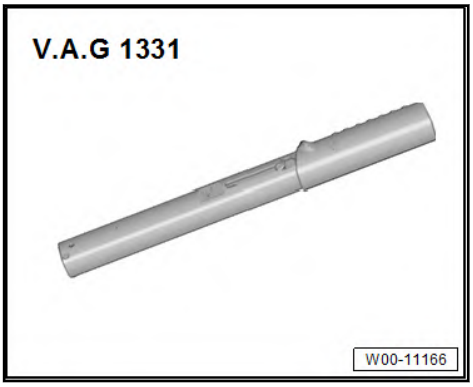

- Tensioning strap -T10038-

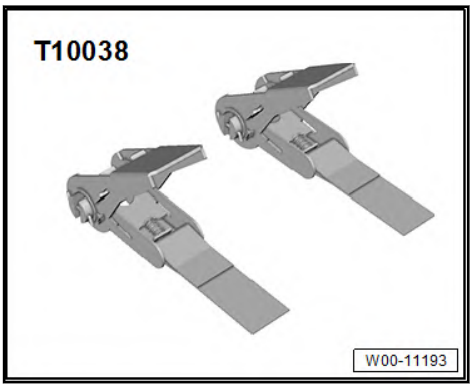

- Socket, 4 mm -T10370-

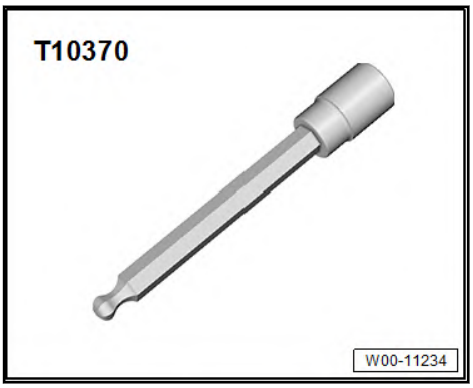

- Assembly tool -T10118-

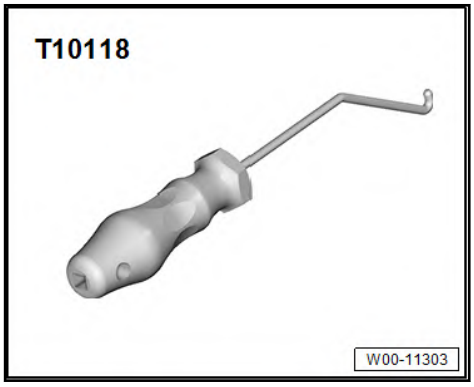

Removing

Fitting location ⇒ Item 1 (page 46) .

– Remove securing bolts -arrows- of pendulum support.

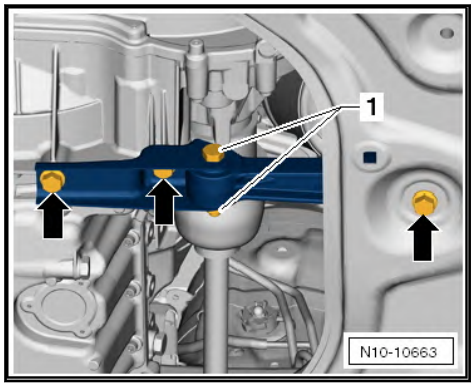

- Bolt -1- must not be loosened.

– Fit tensioning strap -T10038- -3- to engine -1- and subframe -2- as shown.

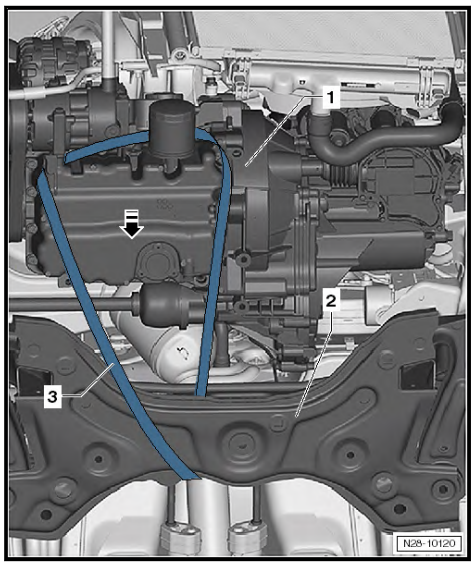

– Pull engine -1- in -direction of arrow- using tensioning strap -T10038-.

- Ensure that there is sufficient clearance to the bodywork.

– Release connector -1- and pull off.

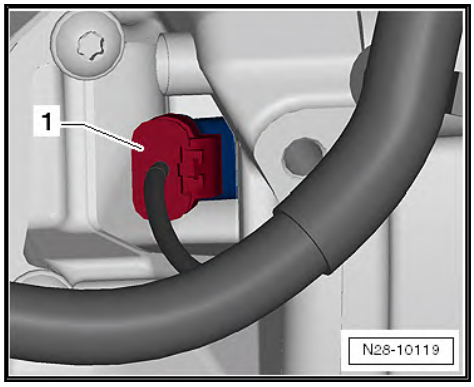

– Unscrew bolt -arrow- using socket insert, 4 mm -T10370-.

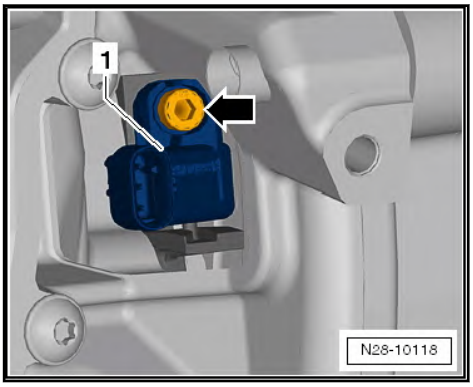

– Remove engine speed sender -G28- -1-.

Installing

Install in reverse order of removal. When doing this, observe the following:

Secure bolt -arrows- against falling.

Torque settings

Component	Torque setting
Engine speed sender -G28-	8 Nm
Pendulum support	⇒ Running gear, axles, steering; Rep. gr. 40; Subframe; Assembly overview - subframe