Back to CD Contents

Repair Instructions No. 6

BMW 8 Series - E31

11/94

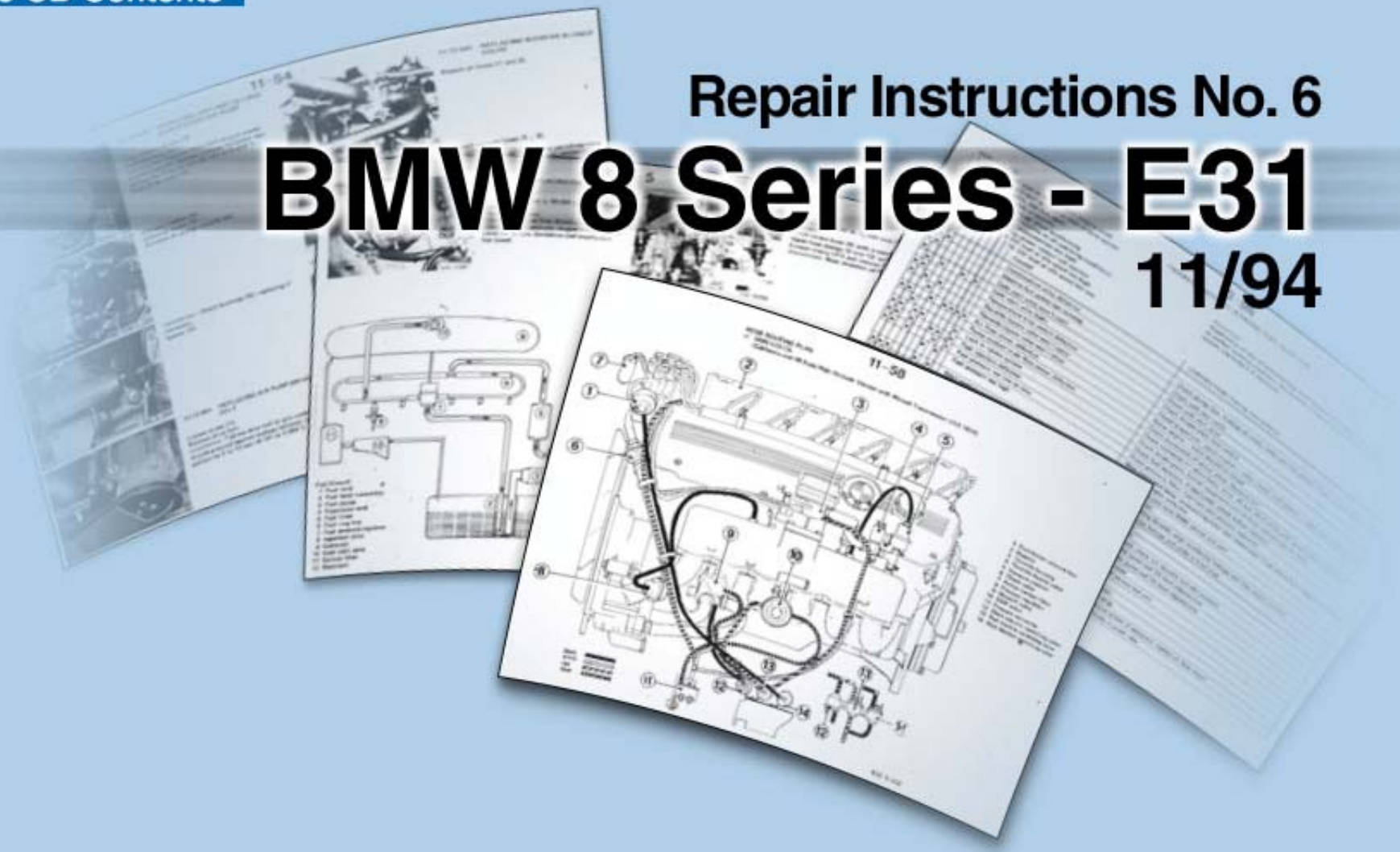

Main contents

00 Maintenance and general data

BMW Maintenance System

The maintenance operations are valid up to model year 93.
From model year 94, see Inspection Sheet.

BMW Maintenance System – USA

Maintenance operations are valid until model year 93.
From model year 94, see Inspection Sheet.

INTRODUCTION

These Repair Instructions are to assist you in performing the necessary maintenance and repair work expertly and correctly. This complements the practical and theoretical training given in our service training schools.

Beginning with 1985 models, Repair Instructions are divided into:

- Repair Instructions for the Series
- The Repair Instructions (3, 5, 6, 7 and 8 Series) describe removal, installation and replacement of construction groups on the vehicle.
- Construction Group Repair Instructions for BMW Automobiles
- The Construction Group Repair Instructions (Main Groups 11, 12, 13, 23, 24 and 33) describe removal, installation and replacement of construction groups on removed assemblies. Testing instructions and troubleshooting charts also feature in the Construction Group Repair Instructions.

For all Technical Data (tightening torques, adjustment values etc.) technical data microfilms are provided.

The Repair Instructions (microfilm or manual) illustrate work which is only possible to perform on standard production cars, i.e. not applicable to cars which have been subsequently modified.

The structure of these Repair Instructions is based on the same numbering system as the flat rate manuals (FR numbers),

Cross references to other FR (Flat Rate) numbers are only intended as assistance and must not be used for extension of the flat rates.

The individual page numbering, for example 64 – 11/8 means:
64 Main Group
11 Sub-group
8 Serial numbers

All the special tools mentioned in the Repair Instructions are summarized in the special tool microfiche, order no. 01 99 9 699 422. The use of special tool is illustrated in the descriptions of various repair operations.

Normally, the Repair Instructions only describe the removal work required for each operation. Installation takes place in reverse order. If it does not, *installation notes* are provided to explain the correct procedure.
In contrast to this, the removal and installation operations for complex tasks are described separately.

The Service Information bulletins provide regular information on improvements and modifications. As an additional source of information, we recommend using the illustrated parts microfiches.

BAYERISCHE MOTOREN WERKE AG
CENTRAL SERVICE DEPARTMENT

Page Cross Reference:
Those pages in the page cross reference plan which are underlined (e.g. 11) are new or revised.

GENERAL INFORMATION

PRECAUTIONS FOR WORKING WITH PARTS CONTAINING ASBESTOS

Inhaling fine asbestos dust could impair health.
Conform with these safety precautions when working with asbestos parts.

- Only work outdoors or in well ventilated rooms.
- Only use manually operated or slow running equipment, with dust extracting equipment if necessary! Only operate fast running equipment with dust extracting attachments.
- Moisten parts prior to machining whenever possible.
- Never blow out brake and clutch parts.
- Moisten dust, fill in containers which can be sealed perfectly and scrap in a manner which prevents danger.
- Asbestos waste and scrapped parts must be collected in perfectly sealed containers marked accordingly and then eliminated without danger for human beings or the environment.

GENERAL INFORMATION

Important When Disconnecting Battery!

Disconnect the battery by disconnecting the ground lead on the battery. Disconnecting the battery will cancel fault memories of control units, so that fault memories must first be interrogated with a tester and, if applicable, faults printed.

Always disconnect both ground wires — otherwise danger of short circuit!

Note after reconnection of the battery!

Re-initialization of the front power windows: Shut the doors, shut the windows using the switch, hold the switch pressed at least 3 seconds.

Re-initialization of the sun roof: shut the sun roof using the switch and hold the switch pressed at least 3 seconds.

Checking initialization: automatic tip closing should work. If not, repeat the above procedures.

Important With Connected Battery!

Working on components, wire connections and so on could cause faults in fault memories of the concerned control units. If disconnection of the battery is specified in the Repair Manual for the carrying out of repairs, there must always be conformance with this in the interest of safety.

Windshield Wipers (Wiper Operating Motor)

Intermittent wiping and wiper speed 1 are switched off by a protector in case of failure. The protector remains active even after eliminating the fault. It can be cancelled by turning the ignition off (terminals 15 and R) for 3 minutes.

Car with Interlock System

If a component of the interlock system was removed and installed or the installed position of the interlock cable changed, the following function check must be carried out.

1. Move selector lever of automatic transmission into "P".
2. Remove ignition key.
3. Press button on selector lever.
4. If the selector lever can be moved out of "P", the interlock cable must be adjusted – refer to Group 25.
5. Switch ignition on.
6. Press button on selector lever.
7. If the selector lever cannot be moved out of "P", the interlock cable must be adjusted – refer to Group 25.

INSTRUCTIONS FOR REMOVING AND INSTALLING ELECTRONIC CONTROL UNITS

Important!

Disconnecting the car's battery will cancel fault memories of control units, so that it is absolutely essential to interrogate fault memories prior to disconnection of the car's battery and to have the faults printed with the BMW Service Tester's printer. Stored faults must then be investigated.

Disconnection and connection of control unit plugs always requires that the ignition be switched off.

Removal and installation of components, relays, fuses, etc. could cause the storage of faults in fault memories of control units capable of self-diagnosis. Consequently after finishing work on the electrical system it is always necessary to interrogate fault memories, investigate stored faults and cancel the fault memories.

INSTRUCTIONS FOR WORKING ON IGNITION, DME (DIGITAL MOTOR ELECTRONICS) AND ENGINE ELECTRICAL SYSTEMS

Caution!

Always switch off the ignition before working on the ignition system — dangerous high tension voltage!

Always remove the DME master relay for the compression test so that the ignition final stages of the DME control unit cannot activate the ignition coils — dangerous high tension voltage!

Always switch off the ignition before connecting and disconnecting the Service tester, other testers, adapters and so on as well as exchanging components.

LIFTING CAR WITH A CAR HOIST

Before driving a car on the platform, make sure that there is sufficient space (clearance) between the hoist and car (spoilers, splash guards, etc.).

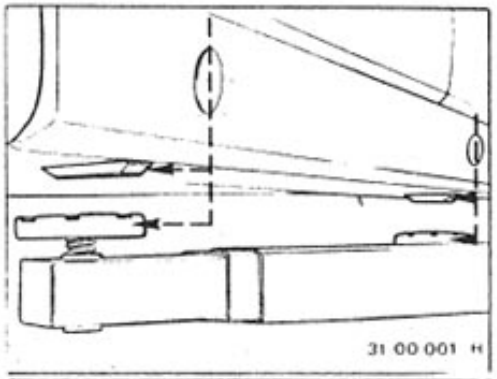

Car hoists must conform with local and national legislative measures concerning accident prevention and maintenance.
Arms of a car hoist must always be applied only on the reinforced points of the frame members.
Make sure that the underside is not damaged.

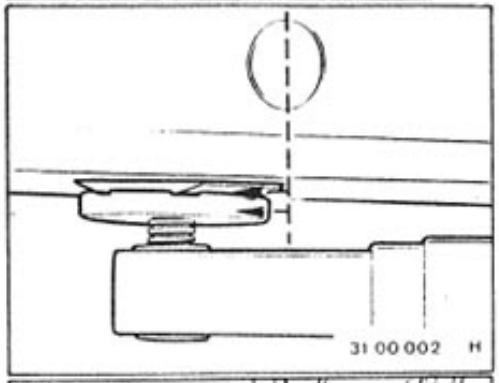

Front:
Apply rubber block of lifting arm on the front reinforcement of the frame member, below a cover for the supplied car's jack.

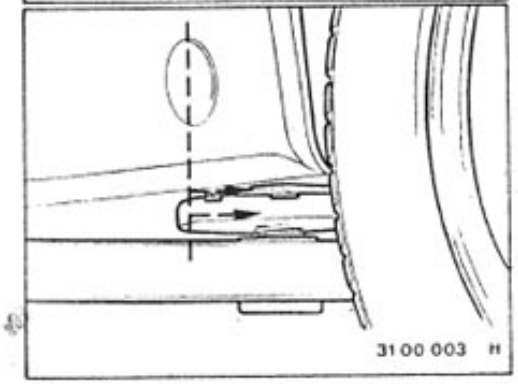

Rear:
Apply rubber block of lifting arm on the rear reinforcement of the frame member, below a cover for the supplied car's jack.

LIFTING CAR WITH A GARAGE JACK

A garage jack may also only be applied for lifting the car on the same take-up points described for the car hoist.
A suitable liner (rubber, wood or plastic) must be used between the jack and car to avoid damage to the undercoating, frame members or floor plate.

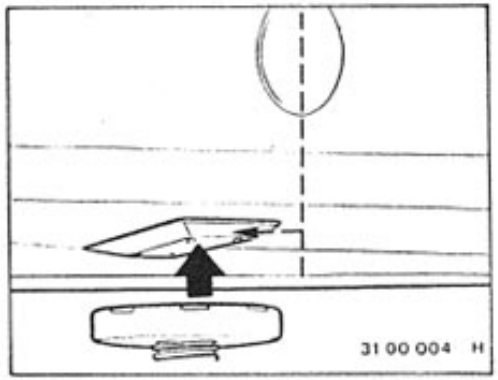

Front Take-up Point

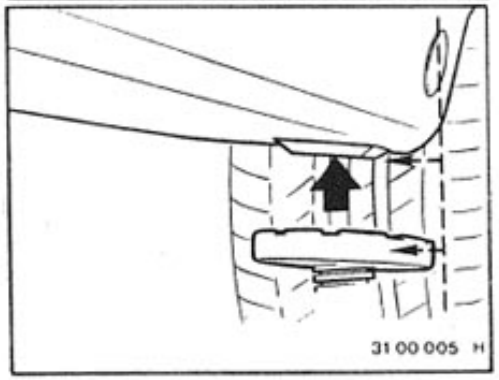

Rear Take-up Point

Important!
Conform with safety precautions and to speed specifications when a car is "driven" on a car hoist or with the rear end jacked up. Also refer to Group 26.

Towing

Always observe applicable legal regulations when towing.

Caution!
Follow instructions in the relevant Owner's Manual.

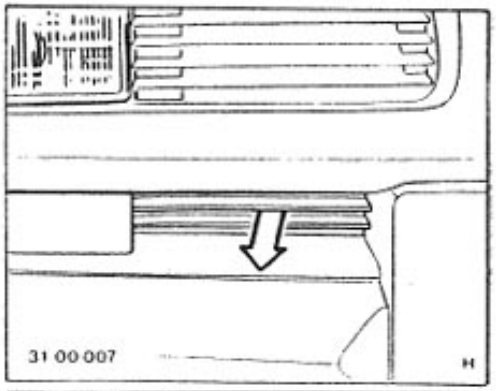

Lift off front right ornamental grille.

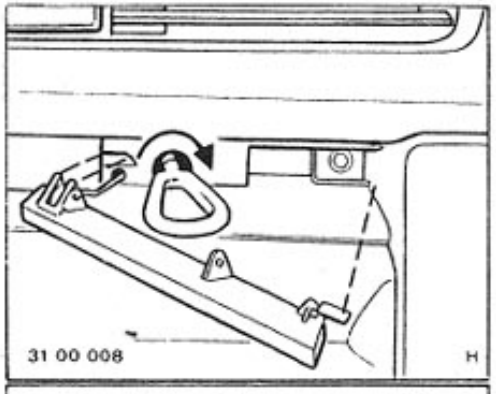

Screw in towing eye at front.

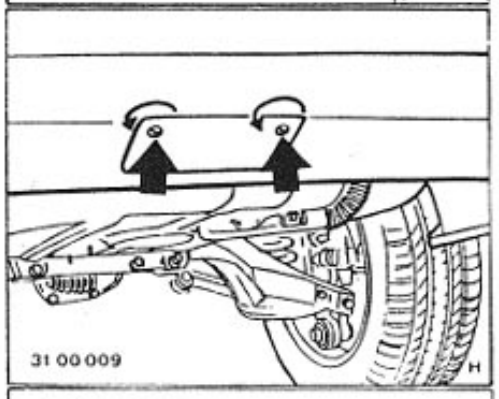

Open flap.

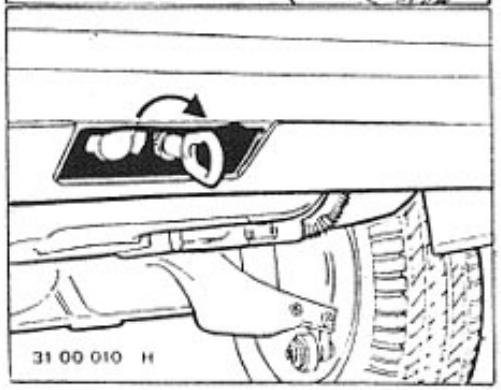

Screw in rear towing eye.

BMW MAINTENANCE SYSTEM

00 00 009 Pre-delivery inspection

	General Information					
	Repair Manual	Technical Data	Nominal Values	Operating Fluids	Owner's Manual	Important Information!
Interrogate fault memories in diagnosing system.						Refer to operating instructions for BMW diagnosing system.
Brief test.						Refer to BMW service tester operating instructions. Further instructions appear on monitor.
Check / correct engine oil level.				Gr. 11		Approved oil only!
Check fuel pipes, tank and hoses for correct routing, condition and leaks.						
Check / correct level of fluid in tank for brakes and clutch.				Gr. 34		Use approved brake fluid.
Check connections and pipes of brake system for leaks, correct position and damage.						
Check / adjust parking brake lever travel.	Gr. 34					
Check wheel bolt tightening torque.		Gr. 36				
Check rim size, tire size and type as well as tire inflation pressure (including spare wheel).		Gr. 36		SI 36		

BMW MAINTENANCE SYSTEM

00 00 009 Pre-delivery Inspection

	General Information					
	Repair Manual	Technical Data	Nominal Values	Operating Fluids	Owner's Manual	Important Information!
Check / correct washing fluid level and antifreeze concentration in supply tank for windshield and headlight cleaners.					+	
Check / correct intensive cleaning fluid level in supply tank.						
Check function of windshield wipers/washer and aiming of water spray nozzles; remove protective sleeves from wiper blades.					+	
Check acid level and charged condition of battery (high current test) and add distilled water if necessary. Charge battery if necessary.	Gr. 61			Gr. 00 SI		
Check lights: headlights/additional headlights, parking lights, brake lights, turn signals, tail lights, backup lights, rear fog lights, license plate lights, passenger compartment lights, glovebox light, engine compartment light and trunk light.					+	
Check horn, headlight flasher and hazard warning lights.					+	
Check instrument and sign lights.					+	
Check control and warning lamps in instrument cluster and check control (incl. ABS, airbag).						
Check heating, ventilating and blower.	Gr. 64					
Check function of headlight cleaners and central locks.					+	
Insert and check function of cigar lighters.						

SI = Service Information

BMW MAINTENANCE SYSTEM 00 00 009 Pre-delivery inspection	General information					Important information!
	Repair Manual	Technical Data	Nominal Values	Operating Fluids	Owner's Manual	
Check function of engine, clutch, transmission, final drive, steering, foot and hand operated brakes. Break in parking brake. Check function of control lamps for ABS and ASC. Check function of speedometer with odometer and daily trip recorder, tachometer, clock, temperature gage and fuel gage. Check engine, transmission, steering, final drive, drive shaft boots, fuel system, clutch and brakes for leaks. Remove seat and other protective covers. *Important!* Reset service indicator only in cars up to production date of 9/90. Reset service indicator after pre-delivery inspection: Switch off all electrical equipment. Switch on ignition – do not run engine. Plug SI-R* with adapter in diagnosis socket. Push in and hold recessed, red INSPECTION button – green lamp (function control) comes on. Red lamp also comes on after approx. 3 seconds and goes out after approx. 12 seconds. Release inspection button – green lamp goes out. Load and time memories are separate and the procedures must always be repeated to reset the time memory. There must be a break of at least 10 seconds between the first and second resettings, and the second resetting can take place,up to 17.5 hours after the first resetting. Checking Service Indicator: All five green light emitting diodes must come on. Yellow and possibly red light emitting diodes as well as INSPECTION sign light must go out. * SI-R = Service indicator resetter, Order No. 62 1 100. Adapter, Order No. 62 1 140. New SI-R, Order No. 62 1 110						

BMW MAINTENANCE SYSTEM

00 00 210 BMW Running-In Check at 2,000 km

	General Information					
	Repair Manual	Technical Data	Nominal Values	Operating Fluids	Owner's Manual	Important Information!
Interrogate fault memories in diagnosing system. Brief test.						Refer to operating instructions for BMW diagnosing system. Refer toBMW service tester operating instructions. Further instructions appear on monitor.
Replace engine oil and oil filter at operating temperature.	Gr. 11	Gr. 11		Gr. 11	+	Use approved oil.
Replace oil in final drive at operating temperature.	Gr. 33	Gr. 33		Gr. 33	+	Use approved oil.
Final inspection with traffic safety test, brakes, steering, control and warning lamps as well as check control reports.						

BMW MAINTENANCE SYSTEM 00 00 220 BMW Inspection I	General Information					
	Repair Manual	Technical Data	Nominal Values	Operating Fluids	Owner's Manual	Important Information!
Interrogate fault memories in diagnosing system. Brief test.						Refer to operating instructions for BMW diagnosing system. Refer toBMW service tester operating instructions. Further instructions appear on monitor.
Replace engine oil and oil filter at operating temperature.	Gr. 11	Gr. 11		Gr. 11		Use approved oil.
Replace spark plugs.		Gr. 12				
Check coolant hoses for leaks; check / correct coolant level and antifreeze concentration.				Gr. 17	+	Replace coolant at least every 2 years.
Check routing and condition of fuel pipes, tank and hoses as well as for leaks.	Gr. 13/16					
Check condition, routing and suspension of exhaust system as well as for leaks.						

BMW MAINTENANCE SYSTEM 00 00 220 BMW Inspection I	General Information					Important Information!
	Repair Manual	Technical Data	Nominal Values	Operating Fluids	Owner's Manual	
Check power steering for leaks; check / correct oil level.				Gr. 32		
Check that steering is without play, adjusting if necessary. Check condition of tie rods and front axle joints. Check steering gear, linkage, joints and dust covers..						
Remove and install front and rear disk brake pads. Check total thickness. Replace pads if necessary. Check surface condition of brake disks. Check brake caliper dust covers for leaks. Lubricate wheel rim centers with grease.	Gr. 34/36					Wheel bolts: use specified torque.
Check connections and pipes of brake system for leaks (also for damage) and correct position. Check that parking brake cables move easily. Adjust parking brake.						*Important!* Use approved brake fluid. Replace brake fluid when indicated by Service Indicator or at least every 2 years. Also refer to Group 00.
Check / correct level of fluid in tank for brakes and clutch.	Gr. 34			Gr. 34		
Check / correct tire pressure (including spare wheel). Check condition of tires (if worn unevenly and customer approves, check and correct wheel alignment and invoice separately).	Gr. 32			SI Gr. 36	+	
Ride level height control: check / correct oil level in tank on unloaded car (car on lifting platform).	Gr. 37			Gr. 37		

SI = Service Information

BMW MAINTENANCE SYSTEM

00 00 220 BMW Inspection I

	General Information					
	Repair Manual	Technical Data	Nominal Values	Service Information	Owner's Manual	Important Information!
Check/correct level and antifreeze concentration in washing fluid tank for windshield and headlights. Check/correct level in intensive cleaning fluid tank.						
Check windshield wipers/washer, wiper blades and aiming of spray nozzles.					+	
Check function of parking lights, turn signals, tail lights, brake lights, backup lights, rear fog lights, license plate lights, passenger compartment lights, glovebox light, engine compartment light and trunk light.					+	
Check function of headlights and additional headlights.					+	
Check horn, headlight flasher and hazard warning lights.					+	
Check instrument and sign lights.					+	
Check acid level in battery and add distilled water if necessary.				Gr. 00	+	
Check charged condition of battery (high current test).	Gr. 61					
Replace microfilter for heater or heater/air conditioner. Shorten replacement intervals if car is operated in extremely dusty regions.	Gr. 64					
Check condition and function of seat belts.	Gr. 72					
Check function of locks for doors, engine hood and trunk lid.						
Check entire body for corrosion,						Refer to Service information of Group 00.

BMW MAINTENANCE SYSTEM 00 00 220 BMW Inspection I	General Information					
	Repair Manual	Technical Data	Nominal Values	Service Information	Owner's Manual	Important Information!
Check all transmissions for leaks.						Visual inspection.
Final inspection with safety test (check ABS and airbag control lamps), brakes: (break in parking brake), steering, clutch or automatic transmission, springs and shock absorbers visually and check function of power steering.	Gr. 34					
Check control and warning lamps in instrument cluster as well as mirrors and heater blower.						
Check reports in check control.						
Important! Reset service indicator after inspection I: Switch off all electrical equipment. Switch on ignition – do not run engine. Plug SI-R* with adapter in diagnosis socket. Push in and hold recessed, red INSPECTION button – green lamp (function control) comes on. Red lamp also comes on after approx. 3 seconds and goes out after approx. 12 seconds. Release inspection button – green lamp goes out.				Gr. 62		
The time-dependent inspection interval is due when the clock symbol lights up together with the INSPECTION sign and has no influence on the green light emitting diodes. If the load and time-dependent inspections occur simultaneously, resetting must be repeated after 10 seconds to have the clock symbol and INSPECTION sign lights go out.						
Important! When the clock symbol lights up in cars since 9/90 only the brake fluid has to be changed.						Replace brake fluid at latest every 2 years.
Checking Service Indicator: All five green light emitting diodes must come on. Yellow and possibly red light emitting diodes as well as INSPECTION sign light must go out.						
SI-R = Service indicator resetter, Order No. 62 1 100. Adapter, Order No. 62 1 140. New SI-r, Order No. 62 1 110						

00 00 230 BMW Inspection II = Inspection I + following operations	General instructions					Important instructions
	Repair Instructions	Technical Data	Service Info	Operating Fluids	Owner's Manual	
Both intake silencers: replace air filter inserts Shorten intervals accordingly for cars operated in dusty regions. Clean both air manifolds (intake volumes).	Gr. 13					
Replace spark plugs (M60 engine)	Gr. 12	Gr. 12			+	
Change oil in automatic transmission at operating temperature	Gr. 24			Gr. 24		Only use approved grades of oil
Change oil in differential at operating temperature	Gr. 33			Gr. 33		Only use approved grades of oil
Check gaiters on output shaft for condition and leaks						Visual inspection
Check thickness of handbrake linings, replacing if necessary	Gr. 34	Gr. 34				
With autom. stability and traction control (ASC + T): Replace filter insert in intake line,	Gr. 34					
At every 2nd inspection II:						
Replace both main fuel filters	Gr. 13					
Check clutch drive plate for wear	Gr. 21					
Change oil in manual transmission at operating temperature	Gr. 23			Gr. 23		Only use approved grades of oil

BMW MAINTENANCE SYSTEM 00 00 230 BMW Inspection II = Inspection I + Additional Work	General Information					Important Information!
	Repair Manual	Technical Data	Nominal Values	Operating Fluids	Owner's Manual	
Check additional heater. If necessary, repair and invoice separately.	Gr. 64					Conform with national and local legislation.
Important! Reset service indicator after inspection II: Switch off all electrical equipment. Switch on ignition – do not run engine. Plug SI-R* with adapter in diagnosis socket. Push in and hold recessed, red INSPECTION button – green lamp (function control) comes on. Red lamp also comes on after approx. 3 seconds and goes out after approx. 12 seconds. Release inspection button – green lamp goes out.						
The time-dependent inspection interval is due when the clock symbol lights up together with the INSPECTION sign and has no influence on the green light emitting diodes. If the load and time-dependent inspections occur simultaneously, resetting must be repeated after 10 seconds to have the clock symbol and INSPECTION sign lights go out.						
Checking Service Indicator: All five green light emitting diodes must come on. Yellow and possibly red light emitting diodes as well as INSPECTION sign light must go out.						
SI-R = Service indicator resetter, Order No. 62 1 100. Adapter, Order No. 62 1 140. New SI-R, Order No. 62 1 110.						

BMW MAINTENANCE SYSTEM BMW Annual Check (Resetting Service Interval Indicator)	General Information					Important Information!
	Repair Manual	Technical Data	Nominal Values	Operating Fluids	Owner's Manual	
Important! When the clock symbol lights up in cars since 9/90 only the brake fluid has to be changed.	Gr. 34			Gr. 34		Replace brake fluid at latest every 2 years.
Reset service indicator for annual check (INSPECTION with clock sysmbol): Switch off all electrical equipment. Switch on ignition – do not run engine. Plug SI-R* with adapter** in diagnosis socket. Push in and hold recessed, red INSPECTION button – green lamp (function control) comes on. Red lamp also comes on after approx. 3 seconds and goes out after approx. 12 seconds. Release inspection button – green lamp goes out.			Gr. 00/62 SI			
Service Indicator with Clock Symbol and Only One Red LED: The time-dependent inspection interval is due when the clock symbol lights up together with the INSPECTION sign and has no influence on the green light emitting diodes. If the load and time-dependent inspections occur simultaneously (clock symbol light and yellow or red LED on), resetting must be repeated after 10 seconds to have the clock symbol and INSPECTION sign lights go out and activate the green light emitting diodes.						
Checking Service Indicator: The number of green light emitting diodes does not change by resetting the time-dependent inspection service indicator. The INSPECTION sign and clock symbol lights must go out.						
* SI-R = Service indicator resetter, Order No. 62 1 100. ** Adapter, Order No. 62 1 140. New SI-R, Order No. 62 1 110. SI = Service Information						

BMW MAINTENANCE SYSTEM 00 00 249 BMW Engine Oil Service	General Information					Important Information!
	Repair Manual	Technical Data	Nominal Values	Operating Fluids	Owner's Manual	
Replace engine oil and oil filter at operating temperature.	Gr. 11			Gr. 11		Use approved oil.
Important! Reset service indicator after Oil Service: Switch off all electrical equipment. Switch on ignition – do not run engine. Plug SI-R* with adapter in diagnosis socket. Push in and hold recessed, yellow OIL SERVICE button** – green lamp (function control) comes on. Yellow lamp also comes on after approx. 10 seconds and goes out after approx. 3 seconds. Release oil service button – green lamp goes out.				Gr. 00/62 SI		
Checking Service Indicator After Approx. 10 Seconds: All five green light emitting diodes must come on. Yellow and possibly red light emitting diodes as well as OIL SERVICE sign light must go out.						

* SI-R = Service indicator resetter, Order No. 62 1 100.
Adapter, Order No. 62 1 140.
New SI-R, Order No. 62 1 110

** *Caution!* Resetting with the wrong button cannot be corrected. Service intervals would be mixed up – also refer to BMW Technik information for Group 62.

SI = Service information

BMW MAINTENANCE SYSTEM 00 00 259 BMW Safety Test	General Information					Important Information!
	Repair Manual	Technical Data	Nominal Values	Operating Fluids	Owner's Manual	
Interrogate fault memories in diagnosing system.						Refer to operating instructions of BMW diagnosing system.
Brief test						Refer to operating instructions of BMW Service Tester.
Steering Test: Steering gear, linkage, coupling, connections, leaks, oil volume.	Gr. 32			Gr. 32		Use approved oil.
Brake Test: Brake pads (remove and install wheels; remove pads), brake disks, pipes, hoses, connections, brake fluid level, parking brake cables, parking brake adjustment: break in parking brake.	Gr. 34					
Important! Replace brake fluid at latest every 2 years.				Gr. 34		Use approved brake fluid.
Tire and Wheel Rim Test: Condition, specified size, tread depth, tire wear pattern, tire pressure (including spare wheel).		Gr. 36		Gr. 36		
Light Test: Headlights, front fog lamps (also aiming), parking lights, tail lights, backup lights, license plate lights, instrument and sign lights, control and warning lamps.	Gr. 63				+	
Warning Equipment Test: Horn, turn signals, hazard warning lights, brake lights, headlight flasher, rear fog light, burglar alarm.					+	
Windshield Wipers/Washer and Headlight Cleaners: Wiper blades, washer (windshield, if applicable headlights), (if applicable fill intensive cleaning fluid tank), supply tank (level/antifreeze), spray nozzle aiming (windshield, if applicable headlights).				Gr. 00 SI	+	
Seat Belt Test: Condition and function.	Gr. 72					
Remarks: Repairs and adjustments are invoiced separately.						
SI = Service Information						

BMW MAINTENANCE SYSTEM	General Information					
	Repair Manual	Technical Data	Nominal Values	Operating Fluids	Owner's Manual	Important Information!
00 11 229 Manual transmission oil change.	Gr. 23			Gr. 23	+	Use approved oil.
00 11 239 Automatic transmission fluid change.	Gr. 24			Gr. 24	+	Use approved ATF.
00 11 259 Final drive oil change.				Gr. 33	+	Use approved oil.

BMW MAINTENANCE SYSTEM

00 00 009 Pre-delivery inspection

	General information					
	Repair Manual	Technical Data	Nominal Values	Operating Fluids	Owner's Manual	Important information!
Check function of other installed special equipment.					+	
Initialize sender of remote control system.						
Check data plate, vehicle identity number and chassis number.						
Compare ordered car equipment against delivered car euipment.						
Tune in radio station and check for interference with engine running by switching all electric equipment on and off.						
Place tools in toolbox and secure jack and wheel bolt wrench.						
Paste label for BMW Emergency Service on lid of toolbox.						
Place owner's manual/service booklet, list of BMW service stations and BMW emergency service stations, spare keys and key case in glovebox.						
Stamp the service booklet and place it in the car.						

BMW Maintenance System - USA

00 00 009 Pre-delivery inspection	General instructions					Important instructions
	Repair Instructions	Technical Data	Service Info	Operating Fluids	Owner's Manual	
Caution! From model 1993, follow Quality Certification Procedure I			Gr. 00			refer to SI 00 24 92 (3660)
Interrogate error memories in diagnosis system. Brief test						refer to operating manual BMW diagnosis systems
Check engine oil level (check lube oil for thinning), if necessary change oil and oil filter.			Gr. 00	Gr. 11	+	Only use approved grades of oil.
Check gasket on filler cover.						
Check coolant hoses for leaks and check routing.						Visual inspection
Check mounting of hose clips.						
Check concentration of coolant and coolant level, topping up if necessary.			Gr. 00	Gr. 17	+	Check long-term anti-freeze and corrosion inhibitor
Check acid level of batteries, topping up with distilled water if required. Check that battery connections are secure.						
Check spark plugs, replace or clean if required and adjust electrode gap.	Gr. 12	Gr. 12				
Check that fuel lines, fuel tank and fuel cap are secure and free of leaks and check fuel filter. Check that injection system is securely mounted and free of leaks.						Visual inspection
Check that exhaust system is correctly fitted.						Visual inspection

00 00 009 Pre-delivery inspection	General instructions					Important instructions
	Repair Instructions	Technical Data	Service Info	Operating Fluids	Owner's Manual	
Tighten nuts and bolts on steering transmission, flexible coupling, track rods and front axle, check self-locking nuts		Gr. 32/34				Check fuses Note tightening torque
Check power steering system for leaks.						Visual inspection
Check/adjust handbrake lever travel	Gr. 34					
Check fluid level in expansion tank for brake and clutch hydraulics.		Gr. 34	Gr. 00	Gr. 34		Always use approved grades of brake fluid.
Check connections and lines in brake system for leaks, damage and correct location.						Visual inspection
Check tire condition, tire size and type and tire pressure (including spare wheel).		Gr. 36	Gr. 36		+	
Check tightening torque on wheel studs. Check rim size and type.		Gr. 36				
Check light system: Check lights: parking lights, tail lights, brake lights, high-beam and low-beam headlights, side marking lights, foglights, reversing lights, license plate lights, inside lights (with delay system), glovebox lights, trunk lights and engine compartment lights, sun visor mirror light, map-reading lights at front and back.					+	
Check headlight alignment and adjust if necessary.	Gr. 63				+	
Check horn, headlight flasher and hazard warning lights with LED's					+	
Reset time.					+	
Program on-board computer (BC) and check function of input keys and remote control system.						

00 00 009 Pre-delivery inspection	General instructions					Important instructions
	Repair Instructions	Technical Data	Service Info	Operating Fluids	Owner's Manual	
Check instrument and sign lights light intensity.					+	
Check indicator and warning lights, clock, warning buzzer and check control: alternator, oil pressure, coolant temperature, indicator lights, brake linings/brake fluid level, foglights, Lambda oxygen sensor, safety belt, ignition key warning buzzer, high-beam headlights, tank clock, ABS and Airbag, check control, gear indicator.						
Fill supply tank for windshield wash system and check anti-freeze level.			Gr. 00		+	If necessary, top up anti-freeze.
Fill container on intensive cleaning system						
Check function of windshield cleaning system.					+	
Check windshield wipe-wash system and spray nozzle adjustment: Remove protective covers from wiper blades.					+	
Check function of intensive cleaning system.						
Check function of rear window heating system.						
Check function of cigarette lighter.						
Radio: check aerial and tuning, set radio stations, suppression when engine running and check all electrical consumers by switching on and off. Also check function of cassette player.	Gr. 65					
Check function of other available items of special equipment: electrical window regulators at front and back, slide/tilt sunroof in all settings, foglights and adjustment of electric radio aerial and speaker balance control. Check function of other items of equipment installed by dealer.						

00 00 009 Pre-delivery inspection	General instructions					Important instructions
	Repair Instructions	Technical Data	Service Info	Operating Fluids	Owner's Manual	
Check outside mirror.						
Check function of central locking system.					+	
Check seat adjustment by hand/electrically.						
Check safety belts.						
Check type plate, chassis and engine number.						
Check order against vehicle to be supplied.						
Place tool kit in vehicle tool box, secure jack and wheel brace.						
Attach sticker with telephone number for BMW breakdown service and date of annual brake fluid change.						
Place Owner's Manual, directory of BMW Service Centers, spare key and key wallet in the glovebox.						
Battery and accessories certificates.						
If applicable, operating manual for radio.						
Factory invoice (Monroney label).						
Cleaning kit for cassette player.						

00 00 009 Pre-delivery inspection	General instructions					Important instructions
	Repair Instructions	Technical Data	Service Info	Operating Fluids	Owner's Manual	
Trial run: Check acceleration, sunroof operation and brake system (before and during the trial run).						*Caution!* Increased braking action from systems with Politex brake linings.
Idle speed (rpm).		+				
Check function of Motronic.						refer to ETM
Check vehicle for wind noise.						
Check drive characteristics and wheel balance.						
Function check of: engine, clutch, transmission, rear axle, steering (wheels in straight-ahead setting); break in handbrake.	Gr. 34					
Check heating, ventilation and air-conditioning system						
Check function of instruments.						
Check cruise control system.						

00 00 009 Pre-delivery inspection	General instructions					Important instructions
	Repair Instructions	Technical Data	Service Info	Operating Fluids	Owner's Manual	
After the trial run:						
Leak check on engine, transmission, steering system, differential, gaiters on input shafts, fuel system, clutch system and brake system as well as cooling system.						Visual inspection
Check and clean inside of vehicle.						
Vehicle washed and polished. Underseal undamaged. Vehicle without scratches or damage.						Visual inspection
Remove seat covers and protective covers.						
Caution! After pre-delivery inspection, reset service interval display: Switch off all consumers. Switch on ignition, do not run the engine. Insert SI-R* into diagnosis receptacle with adapter. Press and hold down red INSPECTION button - green lamp (function display) lights up. After approx. 3 seconds, red lamp also lights up, going out again after approx. 12 seconds. Release inspection button - green lamp goes out.						
Check service interval display: All five green LED's must light up. Yellow LED, and possibly also red LED and INSPECTION panel must go out.						

* SI-R = Reset button for Service Interval Display, Order no. 62 1 100
Adapter Order no. 62 1 140
SI-R new Order no. 62 1 110

BMW Maintenance System - USA

00 00 215 BMW run-in check at 2 000 km (1200 miles)	General instructions					Important instructions
	Repair Instructions	Technical Data	Service Info	Operating Fluids	Owner's Manual	
Caution! From model 1993, follow Quality Certification Procedure II			Gr. 00			refer to SI 00 24 92 (3660)
Interrogate fault memories in diagnosis system. Brief test						
Change engine oil and oil filter at operating temperature.	Gr. 11		Gr. 00	Gr. 11	+	Only use approved grades of oil
Change oil in differential at operating temperature.		Gr. 33	Gr. 00	Gr. 33		Only use approved grades of oil

BMW Maintenance System - USA

00 00 220 BMW Inspection I	General instructions					Important instructions
	Repair Instructions	Technical Data	Service Info	Operating Fluids	Owner's Manual	
Interrogate fault memories in diagnosis system. Brief test						Refer to operating instructions BMW diagnosis system
Change engine oil and oil filter at operating temperature.	Gr. 11		Gr. 00	Gr. 11	+	Only use approved grades of oil
Clean joints and mounting points on throttle valve actuation mechanism, if necessary, oil/grease.			Gr. 13			
Check fuel tank, cap, lines and connections for leaks						Visual inspection
Check cooling system and all connections and heating hoses for leaks; check coolant level and concentration and, if required, top up						*Caution!* Every 2 years (from date of manufacture) coolant must be completely drained and changed.
Check condition, routing, suspension and leaktightness of exhaust system	Gr. 18					
Check oil level in manual transmission and top up if necessary.		Gr. 23	Gr.00	Gr.23		Only use approved grades of oil
Check power steering for leaks and oil level, topping up if necessary.	Gr. 32		Gr. 00	Gr. 32		
Check condition of wheel suspension, track rods, front axle joints, pitman arm and flexible coupling.	Gr. 31/34/36					Observe correct tightening torque Check self-locking nuts
Check steering system for backlash in straight-ahead setting.	Gr. 32					

00 00 220 BMW Inspection I	General instructions					Important instructions
	Repair Instructions	Techn. Data	Service Info	Operating Fluids	Owner's Manual	
Check differential oil level and top up if necessary.			Gr. 00	Gr. 33		Only use approved grades of oil
Remove and install front and rear brake linings, checking total thickness. If necessary, replace linings. Check surface condition of brake discs. Grease wheel hub centers.	Gr. 34	Gr. 34	Gr. 36			
Check fluid level in expansion tank for brake and clutch hydraulic systems, topping up if necessary.	Gr. 34			Gr. 34		Use approved grade of brake fluid
Caution! Change brake fluid no later than every 2 years.	Gr. 34			Gr. 34		
Check brake calipers and gaiters for leaks.	Gr. 34		Gr. 00			Visual inspection
Check connections and lines in brake system for leaks, damage and correct routing. Check ease-of-movement of handbrake cables. Adjust handbrake.	Gr. 34					
Check tire pressure and correct if necessary (including spare wheel).			Gr. 36		+	
Check condition of tires.			Gr. 36			
If tires have worn unevenly: recommend axle alignment check (as separate invoice item).	Gr. 32					

00 00 220 BMW Inspection I	General instructions					Important instructions
	Repair Instructions	Technical Data	Service Info	Operating Fluids	Owner's Manual	
Level control, check hydraulic fluid level with laden vehicle. If necessary, top up hydraulic fluid (not required from 93 model).	Gr. 37			Gr. 37		
Tighten locks on doors, hood and trunk lids and check function.						
Oil door and lid hinges, grease door and lid locks.						
Check acid level in battery and top up with distilled water if necessary.						
Check function of air-conditioning system and check flow of refrigerant.	Gr. 64					
Replace microfilter in heating and air-conditioning system. Shorten intervals accordingly for cars operated in dusty regions.						
Check function of the following items of equipment: lights: headlights, parking lights, reversing lights, license plate lights, inside lights with delay system, glovebox light, engine compartment and trunk lights. Warning equipment: indicator lights, hazard warning lights, brake lights, horn, headlight flasher and headlight low-beam switch. Check/adjust beam alignment of headlights. Check function of Check Control; check indicator lamps for ABS, ASC and SRS systems.	Gr. 63					

00 00 220 BMW Inspection I	General instructions					Important instructions
	Repair Instructions	Technical Data	Service Info	Operating Fluids	Owner's Manual	
Top up container for windshield wash system / check concentration of anti-freeze in system. If necessary, top up fluid in intensive cleaning system.			Gr. 00		+	
Check function of wash-wipe system and check alignment of spray nozzles.						
Check seatbelts for condition and function.						
Final inspection and trial run with inspection of road safety: Brakes, steering system, clutch, automatic transmission control unit and mirrors; Break in handbrake.	Gr. 34					*Caution!* Increased brake force on systems with Politex brake linings. Break in handbrakes - see 34 10 014 in the Repair Instructions.
Check all transmissions for leaks.						Visual inspection
Caution! After Inspection I, reset service interval display: switch off all consumers. Switch on ignition, do not run the engine. Insert SI-R* with adapter in diagnosis receptacle. Press and hold down red INSPECTION button - green lamp (function check) lights up -. After approx. 3 seconds, the red lamp also lights up, going out after approx. 12 seconds. Release inspection button - remove green lamp.						
Check Service Interval Indicator: All five green LED's must light up. Yellow and possibly also red LED and INSPECTION panel must go out.						

* SI-R = reset button for Service Interval Display, order no. 62 1 100
Adapter Order no. 62 1 140
SI-R new Order no. 62 1 110

BMW Maintenance System - USA

00 00 231 BMW Inspection II = Inspection I + Extra Work	General instructions					Important instructions
	Repair Instructions	Technical Data	Service Info	Operating Fluids	Owner's Manual	
Replace spark plugs.	Gr. 12	Gr. 12		+		
Both intake silencers: replace air filter insert. Shorten intervals accordingly for cars operated in dusty regions. Clean both air manifolds (intake volumes)	Gr. 13					
Replace (both) main fuel filters. If dirty fuel is used, shorten interval accordingly. (recommended in California and mandatory in all other States)	Gr. 13				+	
Check clutch drive plate for wear	Gr. 21					
Change oil in automatic transmission at operating temperature	Gr. 24	Gr. 24	Gr. 00	Gr. 24	+	Only use approved grades of oil
Change oil in differential at operating temperature		Gr. 33	Gr. 00	Gr. 33	+	Only use approved grades of oil
Check gaiters on output shaft for condition and leaks						Visual inspection
Check thickness of handbrake linings.	Gr. 34	Gr. 34				
With automatic stability and traction control (ASC+T): Replace filter insert in intake line	Gr. 34					
Inspect entire body for rust damage in accordance with the warranty terms. (at least every 2 years).						
Every 2nd Inspection II:						
Change oil in manual transmission at operating temperature.	Gr. 23	Gr. 23	Gr. 23	Gr. 23	+	Only use approved grades of oil.

00 00 231 BMW Inspection II = Inspection I + Extra Work	General instructions					Important instructions
	Repair Instructions	Technical Data	Service Info	Operating Fluids	Owner's Manual	

Caution!
After Inspection II, reset Service Interval Display:
Switch off all consumers.
Switch on ignition, do not run the engine.
Insert SI-R* with adapter in diagnosis receptacle.
Press and hold down red INSPECTION button - green lamp (function check) lights up -. After approx. 3 seconds, a red lamp also lights up, then goes out after approx. 12 seconds.
Release inspection button - remove green lamp.

Check Service Interval Display:
All five green LED's must light up.
Yellow and possibly also red LED and INSPECTION panel must switch off.

* SI-R = reset button for Service Interval Display,	Order No. 62 1 100
Adapter	Order no. 62 1 140
SI-R new	Order no. 62 1 110

BMW Maintenance System - USA

00 00 249 BMW Engine Oil Service	General instructions					Important instructions
	Repair Instructions	Technical Data	Service Info	Operating Fluids	Owner's Manual	
Change engine oil and oil filter at operating temperature.		Gr. 00	Gr. 11			Only use approved grades of oil
Only during first engine oil service, (from Model '93): Change oil in differential at operating temperature		Gr. 33	Gr. 00	Gr. 33	+	Only use approved grades of oil

Caution!
After oil service, reset Service Interval Display:
Switch off all consumers.
Switch on ignition, do not run the engine.
Insert SI-R** in diagnosis receptacle with adapter.
Press and hold down yellow OILSERVICE*** button - green lamp (function check) lights up -. After approx. 10 seconds, the yellow lamp also lights up and goes out again after approx. 3 seconds.
Release OILSERVICE button - green lamp goes out.

Check Service Interval Display after approx. 10 seconds:
All five green LED's must light up together.
The yellow (and possibly the red) LED and the lettering in OILSERVICE panel must go out.

** SI-R = Reset button for Service Interval Display Order No. 62 1 100
Adapter Order No. 62 1 140
SI-R new Order No. 62 1 110

*** *Caution!*
Reset with the wrong button cannot be corrected.
Service Intervals are confused - also refer to BMW Technik - After-Sales Service Information, Gr. 62.

BMW Maintenance System - USA

	General instructions					Important instructions
	Repair Instructions	Technical Data	Service Info	Operating Fluids	Owner's Manual	
BMW Lambda oxygen sensor service (required every 50 000 miles)						
Replace Lambda oxygen sensor every 50 000 miles	Gr. 11	Gr. 11				
Every 3 years from date of manufacture:						
BMW Airbag system (SRS) inspection						
Visual inspection to ensure that all airbag (SRS) components are still in original condition (no change in shape or position). No unauthorized wiring changes, additional wires or connections on airbag wiring harness are permitted. The airbag trim and ripcords must not be frayed, torn or separated in any other way. The airbag must not be treated with cleaning agent, lubricant or protective agent. Check that the correct labels (2 off) are fitted to front axle carrier and on glovebox.						

00 00 259 Additional scope recommended: separate invoice items	General Instructions					Important instructions
	Repair Instructions	Technical Data	Service Info	Operating Fluids	Owner's Manual	
Check steering system: steering transmission, steering linkages, flexible coupling, screw connections. Check power steering system for leaks, oil fill and condition.	Gr. 32		Gr. 00	Gr. 32		Only use approved grades of oil
Check brakes: brake blocks (remove and refit wheels), brake discs, lines, hoses, connections, fluid level, handbrake.	Gr. 34					
Caution! Change brake fluid at least once a year.			Gr. 00	Gr. 34		Always use approved grade of brake fluid
Check tires and disk wheels: condition, tire pressure, permitted size (including spare wheel).		Gr. 36	Gr. 36			
Check lighting: headlights, auxiliary headlights (including beam alignment), parking lights, tail lights and reversing lights, license plate lights, instrument and info' panel lights, glovebox lights, engine compartment light and trunk light, indicator and hazard warning lights, Check Control, ABS and Airbag warning lights.	Gr. 63					
Check warning system: horn, headlight flasher, indicator lights, hazard warning lights, brake lights.						
Check windshield wipe/wash, headlight cleaning system: wiper blades, wash system (windshield, headlights where appropriate and intensive cleaning system), fluid container (fluid level/anti-freeze), spray nozzle adjustment (windshield and headlights) and, where necessary, fluid level for intensive cleaning system.			Gr. 00		+	
Check safety belts: condition and function.	Gr. 72					
Clean cassette player head and align rollers every 50 - 100 hours or more often if sound quality is poor.						
Final inspection and trial run with inspection for road safety: Brakes, steering unit, clutch, automatic transmission control unit and mirrors.						*Caution!* Increased brake action on systems fitted with Politex brake linings.
Comment: Repair and adjustment work as separate invoice items.						

11 Engine

11 Engine M70

For additional work, refer to “Construction Group Repair Instructions”

General Information

M70

Cylinder configuration:

Cylinders 1 ... 6, viewed in direction of travel, are arranged on the right side of the vehicle, starting with cylinder 1.

Cylinders 7 ... 12, viewed in direction of travel, are arranged on the left side of the vehicle, starting with cylinder 7.

Air manifold, throttle body and air filter with mass air flow sensor for each cylinder bank are arranged on the opposite side to their respective bank.

The operations described apply to both cylinder banks: if special explanations are required, the procedures for each cylinder bank are described separately.

General instructions for operations on valve timing:

If operations on the cylinder head are performed where the camshaft was removed, please note the following:
The hydraulic valve tappets expand without load being applied by the camshaft and, after installation, require some time before they compress back down. This means that, if parts are assembled in rapid sequence, even the "closed" valves may still be open and in direct contact with the piston.

Note the following wait periods between installation of the camshaft and mounting of the cylinder head:

ambient temperature 20° C	4 mins.
10° C - 20° C	11 mins.
0° C - 10° C	30 mins.

After assembly of the camshaft and the timing chain, wait for the following periods before turning the engine crankshaft:

ambient temperature 20° C	after 10 mins.
10° C - 20° C	after 30 mins.
0° C - 10° C	after 75 mins.

General instructions for work involving the gaskets:

Apply a bead of cement to all contact points and a thin, even coat of Hylomar SQ 32M** to determine the location of the gaskets.

** Refer to BMW Parts Service

11 00 039 Checking compression of all cylinders (M70)

Caution!
High voltage – danger of death!
Disconnect power supply from ignition coils.
Disconnect fuel pump relay and DME main relay.
Note instructions on compression check, refer to General Data MG12

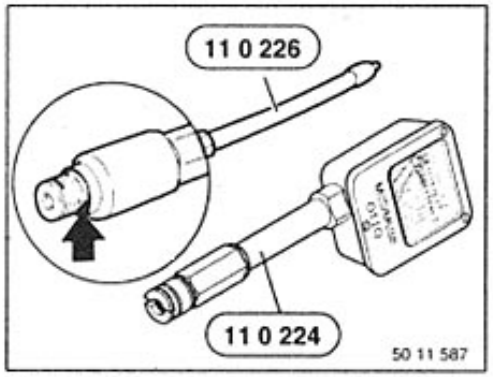

Removing all spark plugs, refer to 12 12 011

Insert special tool 11 0 226 in spark plug thread by hand.

Note:
Check condition of seal and replace if necessary.

Connect up special tool 11 0 224 (compression tester).

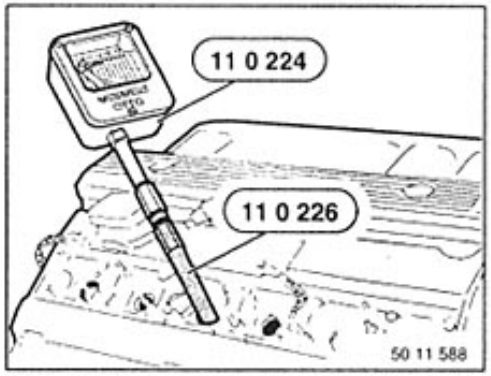

Depress accelerator and actuate starter until compression stops rising.

Compression pressure

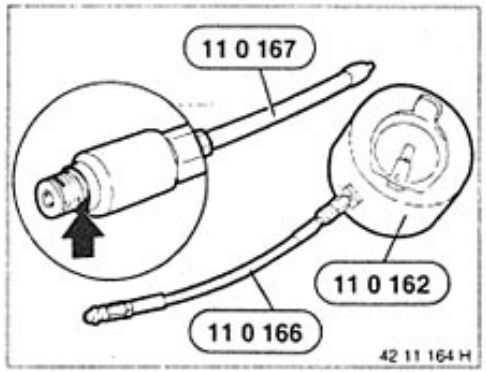

Note:
special tool 11 0 162 / 166 / 167 can still be re-used.

Refer to Technical Data

00 00 249 BMW engine oil service

M70

(change engine oil and oil filter)

The oil change should be performed at operating temperature.

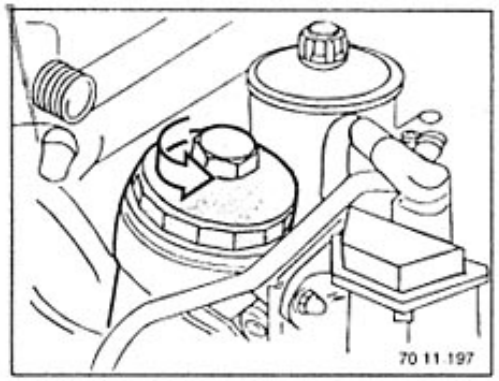

Drain oil from oil filter into oil pan by opening the oil filter cover.

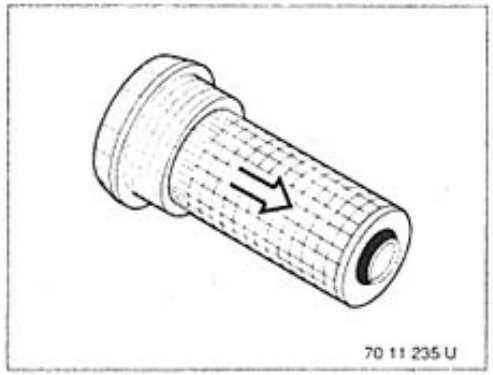

Remove oil filter from oil filter cover.

Installation:
Note installation direction of filter.
Filter must locate in cover.

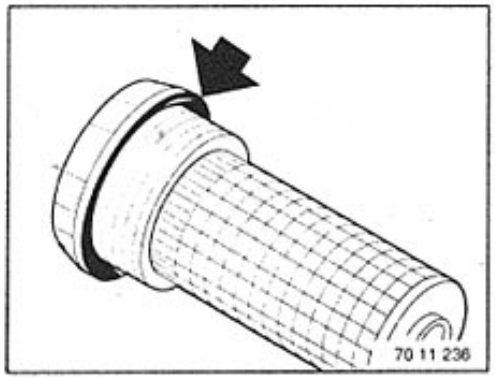

Installation:
Replace O-ring in oil filter cover.
Tightening torque 11 42 2AZ*

* Refer to Technical Data

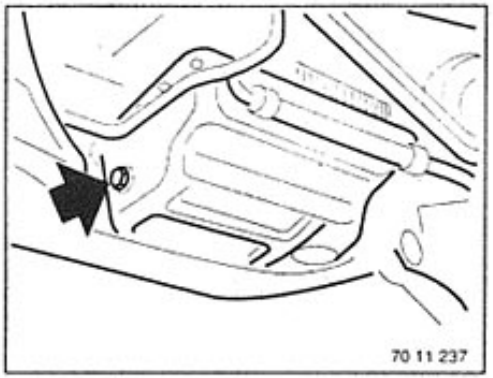

Once oil filter housing has been drained, open oil drain plug.
Drain or draw off the oil.

Installation:
Fit a new seal.
Tightening torque 11 13 1AZ*

Fill with engine oil

Switch on engine and run at idle speed until oil indicator lamp goes out.

Switch off engine and check oil level (vehicle on level ground).
Engine oil grades **

* Refer to Technical Data
** Refer to BMW Operating Fluids

11 00 050 Removing and installing engine

M70

Remove radiator and expansion tank, refer to 17 11 500.

Remove transmission, refer to 23 00 025, 24 00 026.

Caution!
To prevent damage to the heating connections, special tool 00 0 200 or special tool 11 0 010 used for removal of transmission must remain in place until engine is attached to special tool 11 0 100.

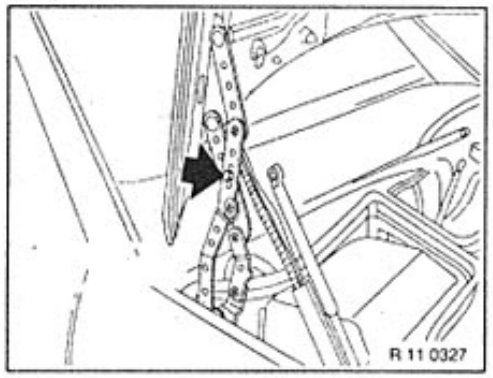

Lift engine hood into assembly position. Disconnect damper strut on engine hood, completely open engine hood and secure with one screw on each side (left and right).

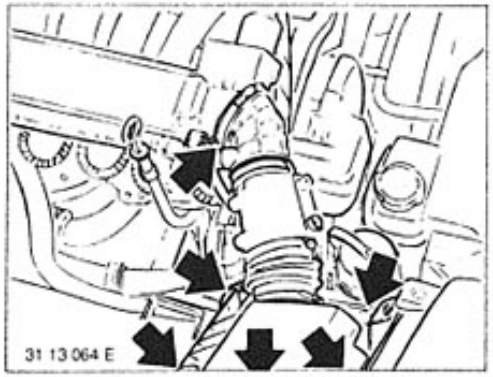

Remove complete mass air flow sensor with suction gaiter and upper section of filter from left and right sides.

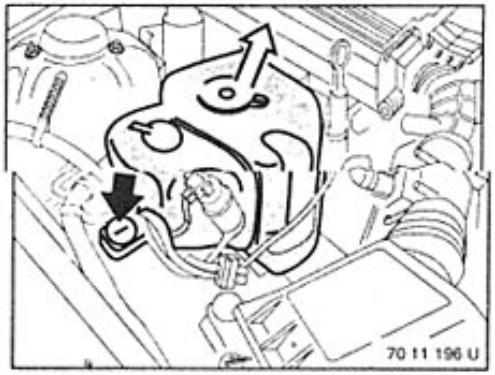

Remove windshield wash container and place to one side.

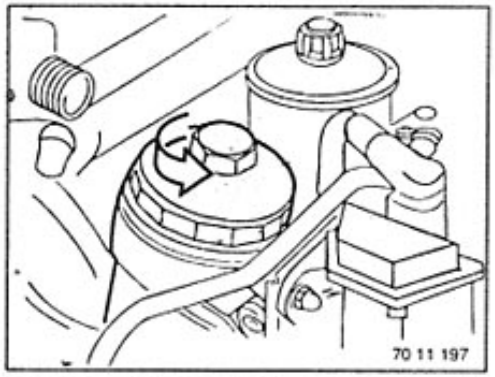

Drain oil from oil filter into the oil pan by opening the oil filter cover.

Installation:
Fit new gasket.

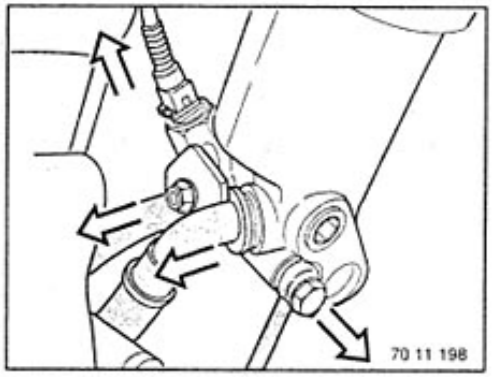

Disconnect oil lines from oil filter. Remove connector.

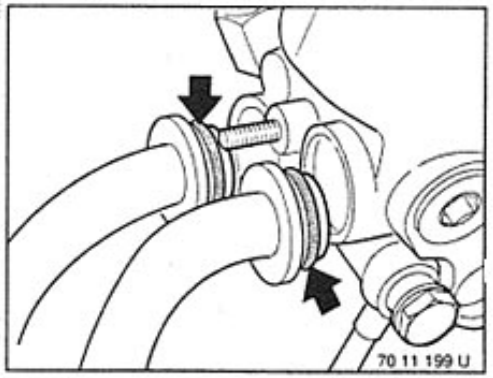

Installation:
Fit new seals.

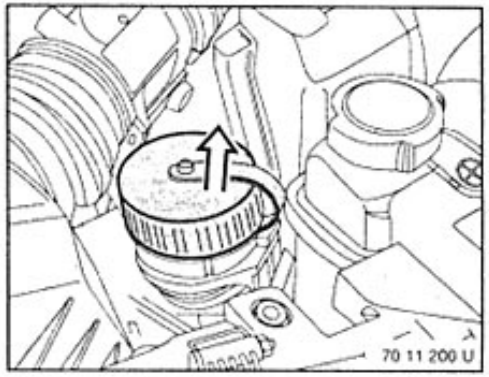

Unclip diagnostic plug.

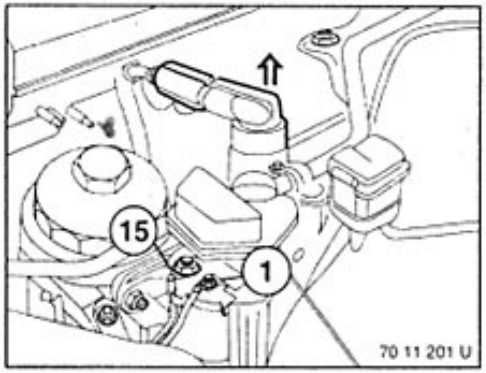

Disconnect ignition leads and connections on left and right ignition coils.

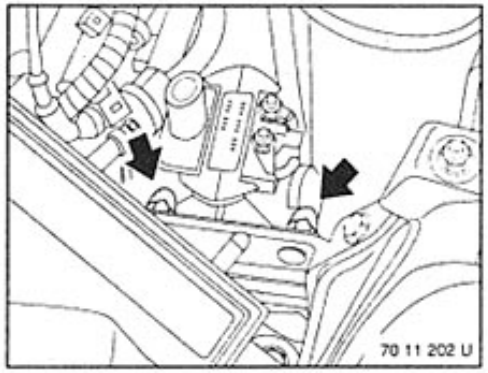

Unscrew right ignition coil.

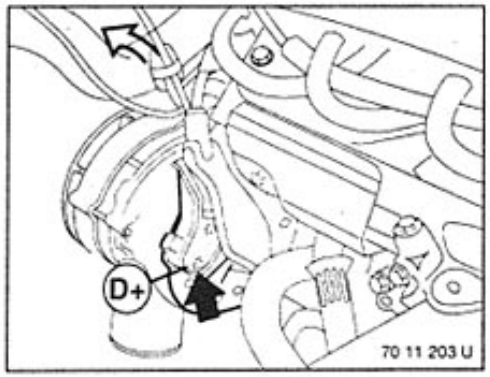

Unscrew lead for D+ (thin lead) on the alternator and pull out of rubber cap.

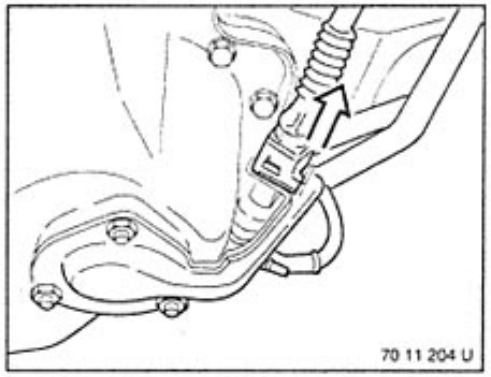

Disconnect oil level sender plug.

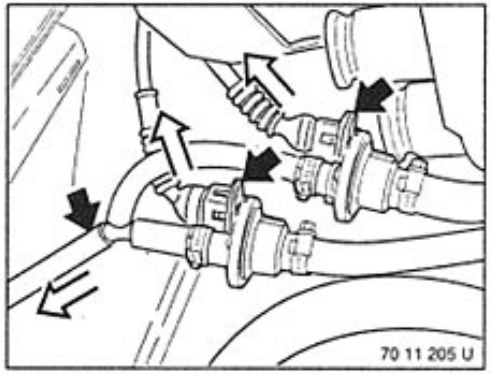

Pull both plugs off of tank venting valves.
Disconnect hose.

Important!
Don't mix up plugs.

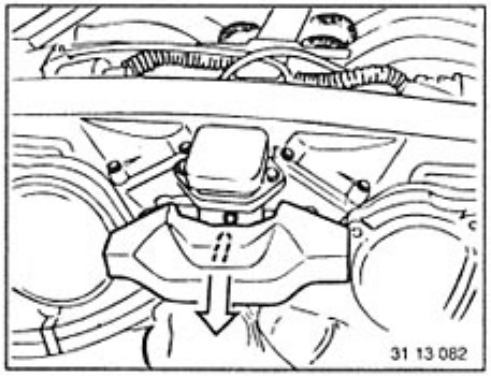

Pull off oil catching tray

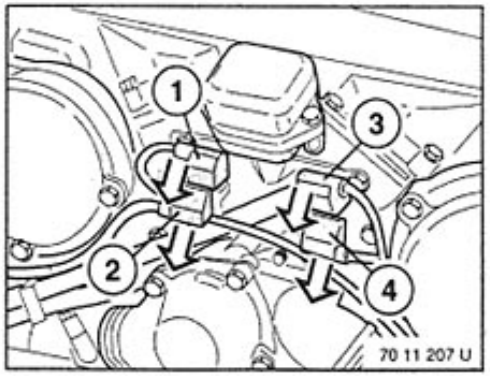

Pull off plugs (1 ... 4).

Installation:

1 = Pulse sender	Cyl. 1 ... 6
2 = Cyl. identifier	Cyl. 1 ... 6
3 = Cyl. identifier	Cyl. 7 ... 12
4 = Pulse sender	Cyl. 7 ... 12

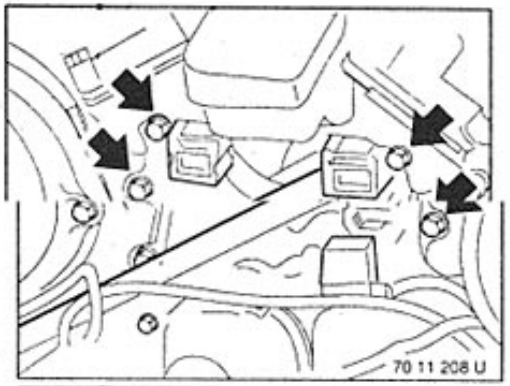

Unscrew bracket.

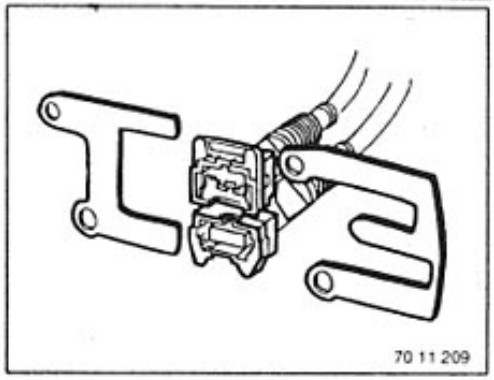

Pull plugs out of holders.

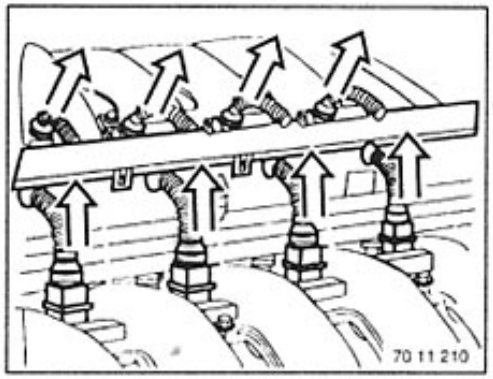

Pull plugs off of fuel injectors.

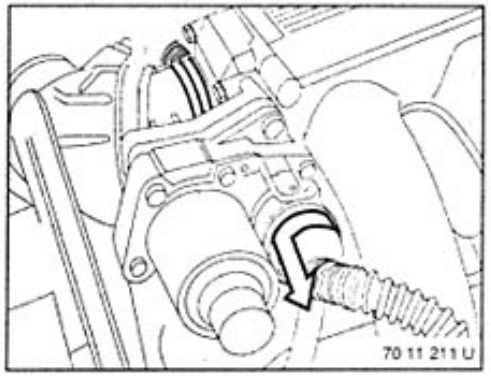

Disconnect plugs on left and right throttle valve assemblies.

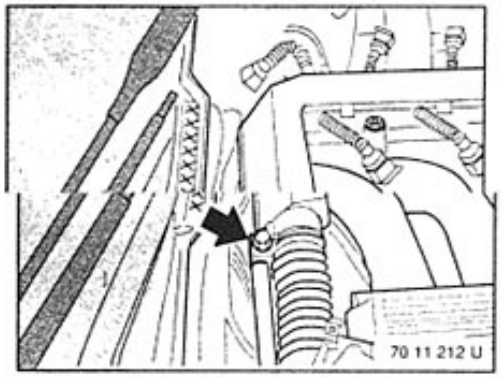

Unscrew electric lead duct on rear end of engine.

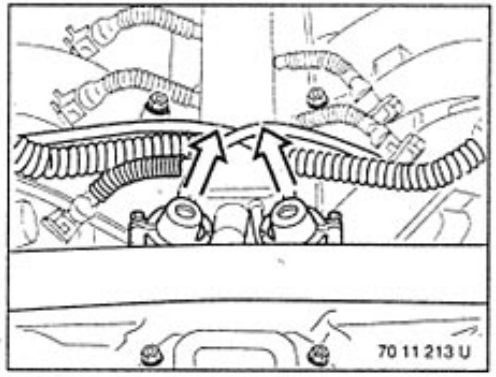

Pull vacuum hoses off of pressure regulators.

Installation:
Note arrangement of hoses.

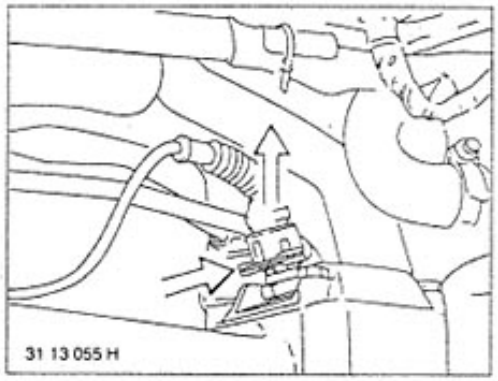

Pull off both plugs on air intake manifolds.

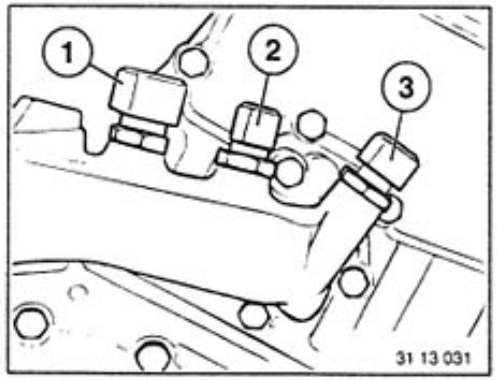

Pull off plugs on temperature sensors on rear end of engine.

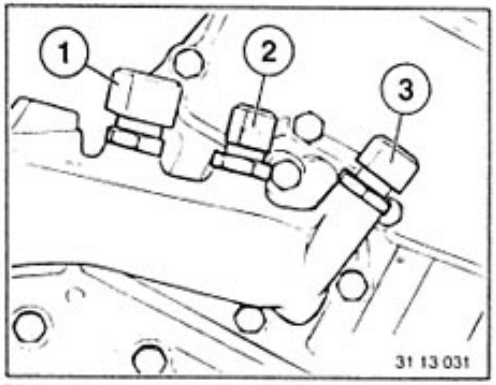

Arrangement:
1 Temperature sensor - DME
2 Temperature sensor - EML
3 Temperature sensor - temp. gage

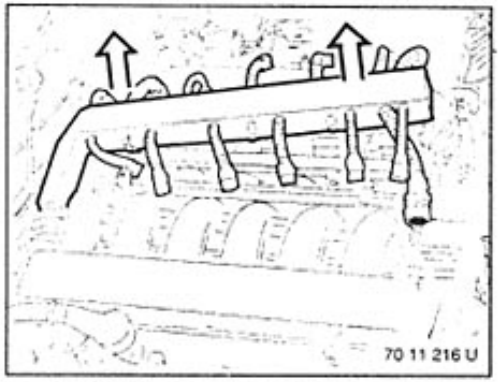

Lift off and move back electric lead duct.

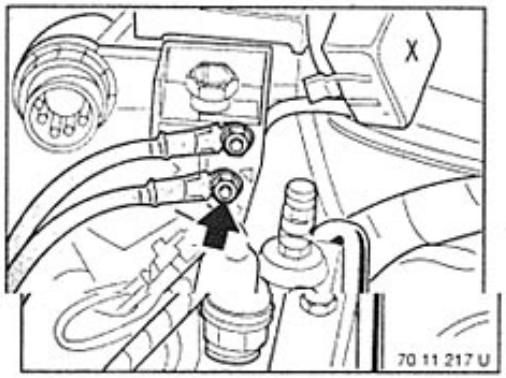

Unscrew connection for alternator on B+ connection point.

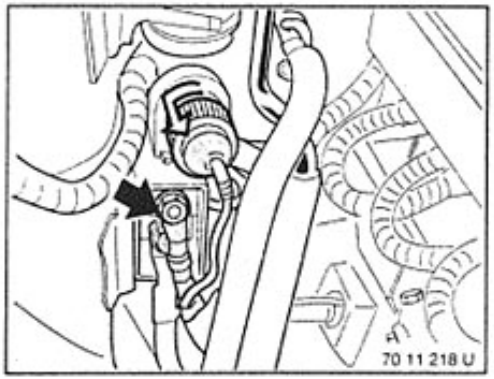

Unscrew connections for starter at connection point on right wheel house.

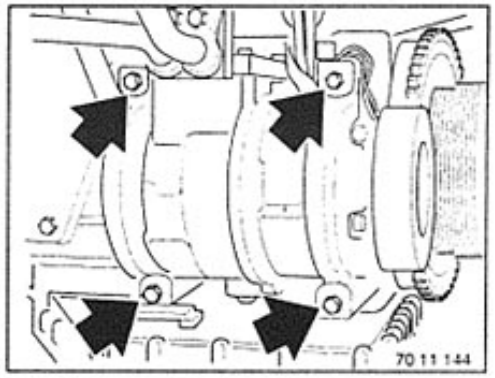

Unscrew AC compressor on engine.

Note:
Hoses remain connected.
Mount side of AC compressor on wheel house.

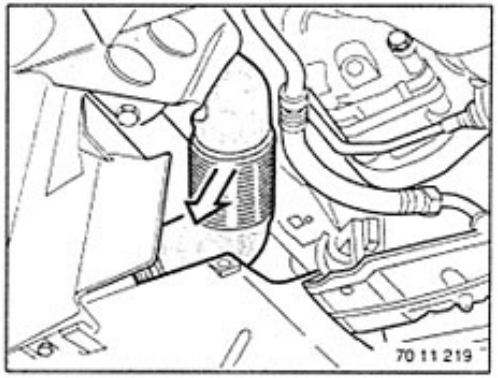

Unscrew cool air guide for alternator.

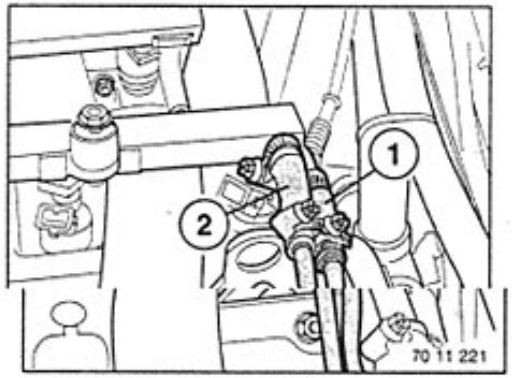

Unscrew fuel pipes (1 ... 2)

Installation:
Arrangement of Fuel Pipes:
1 = Cylinders 1 ... 6
2 = Cylinders 7 ... 12

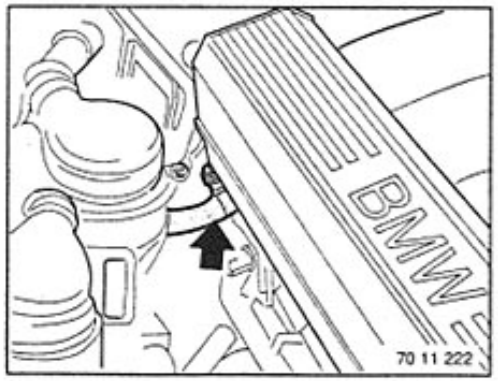

Unscrew fuel return pipe on rear end of engine to the right.

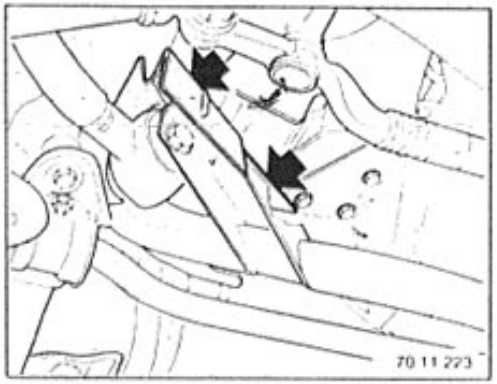

Unscrew heat shields on left and right thrust struts.

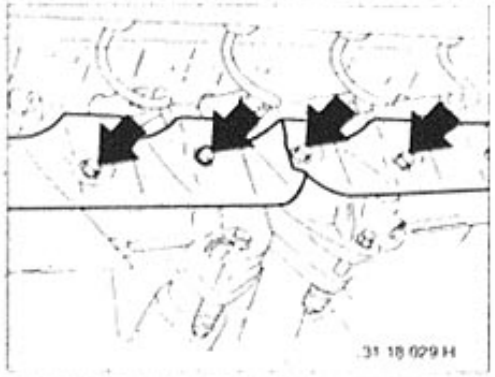

Unscrew heat shields on right exhaust manifolds.

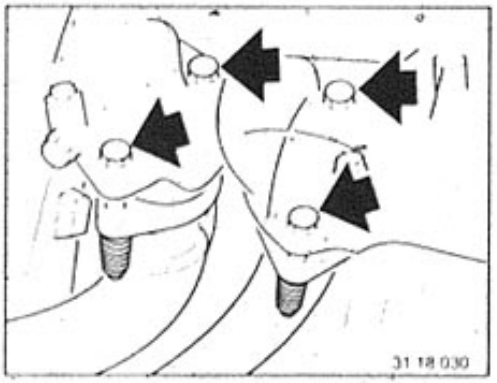

Unscrew right exhaust pipes on exhaust manifolds and remove.

Important!
Tighten exhaust pipes only after installation of the engine and complete exhaust assembly.

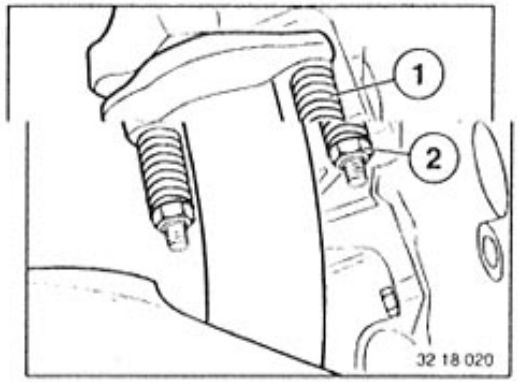

Installation:
Replace self-locking nuts.
Lubricate tapers of flanges with CRC** copper paste.
Press springs (2) flat uniformly by tightening nuts (1) with a torque of 10 Nm (7 ft. lbs.).
Loosen nuts (1) 1 and 1/2 turns afterwards.
Flanges must be parallel to each other after finishing installation.
Springs must not be pressed flat.
The pipe with compensator must be tightened last due to the danger of torsion.

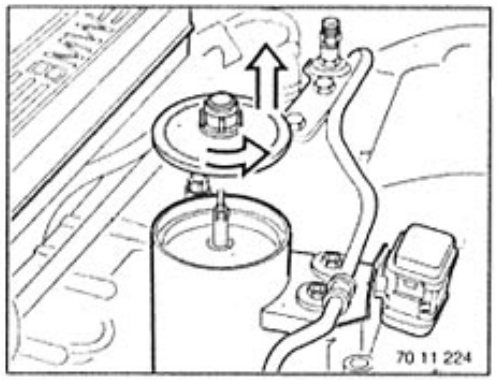

Draw oil out of power steering pump's supply tank.

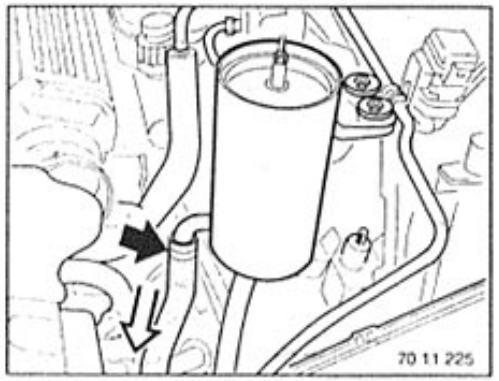

Unscrew hose on supply tank.

** Source of Supply: HWB

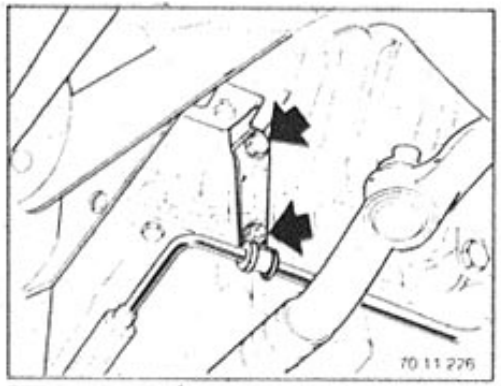

Unscrew bracket for ASC+T line and starter motor support from engine block.
Lift out starter motor.

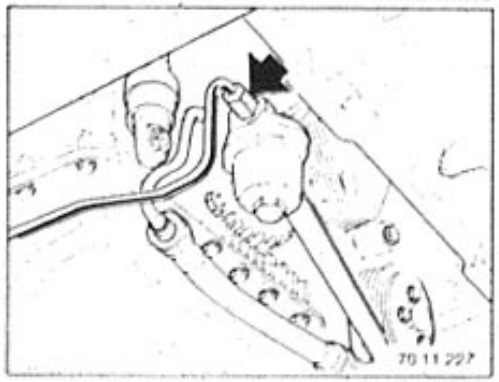

Unscrew ASC+T line from filter.

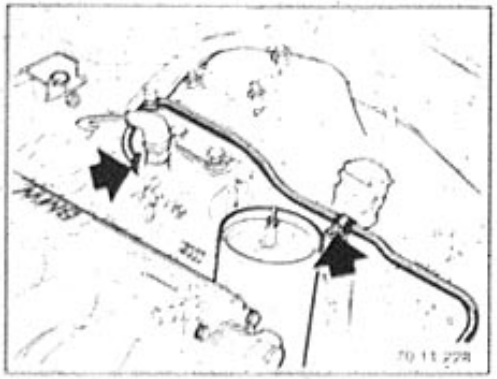

Remove bracket and hydraulic line from 3-phase governor.

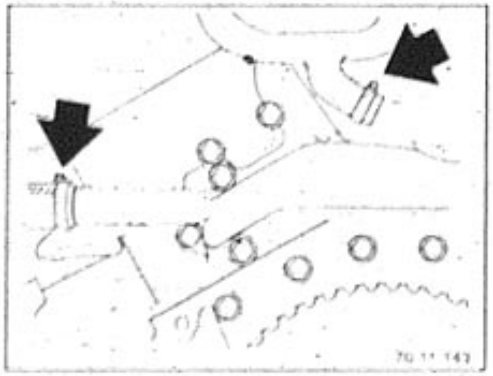

Fit heating hoses from coolant manifold and coolant pipe between heating firewall and engine.

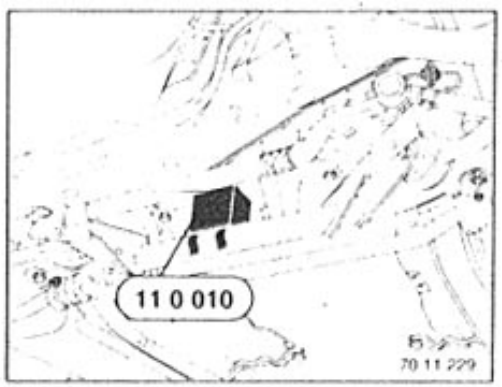

Caution!
Before removing special tool 00 0 200, always install special tool 11 0 010 since otherwise the engine makes contact with the spigot neck of the heating unit, causing damage.
Install special tool 11 0 010.

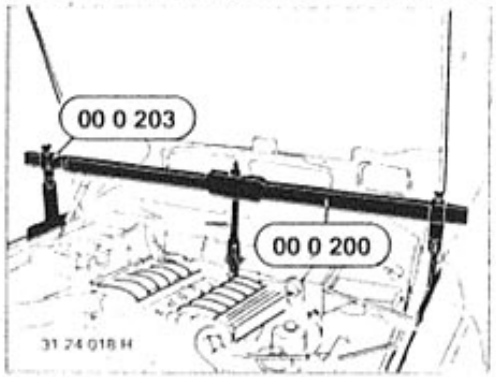

Remove special tool 00 0 200.

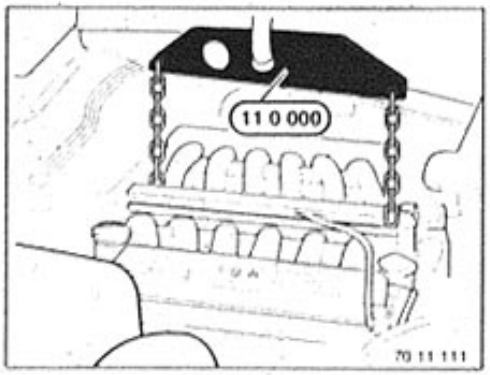

Attach special tool 11 0 000 to the brackets.

Unscrew ground tape from engine support arm.

Unscrew engine mount on left and right sides.

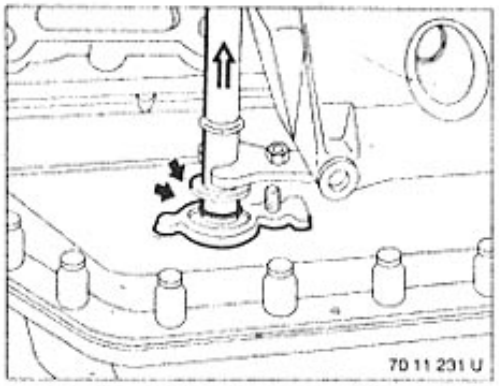

Remove guide tube for oil dipstick.

Installation:
Note arrangement of seal and disc.

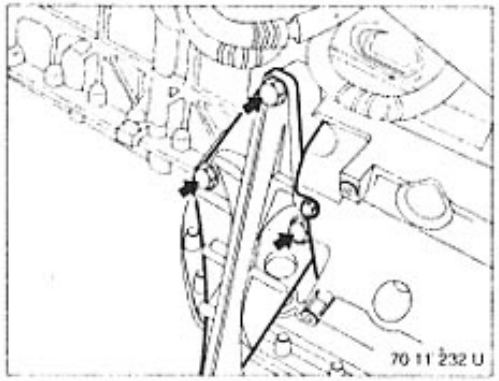

Raise engine slightly and remove right engine support bracket.

Lift engine and turn back to the right.
Guide exhaust pipes to left of steering spindle when lifting out.

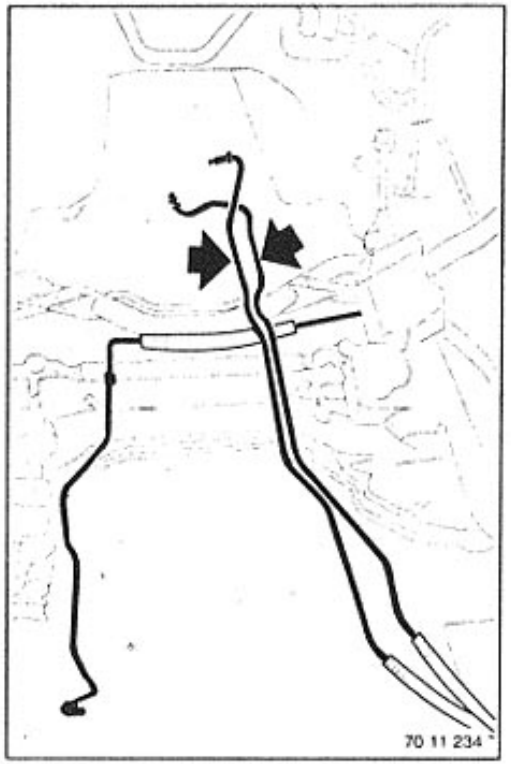

Installation:
On version with automatic transmission:
Before installing the engine, install oil cooler lines in the correct position.

11 12 002 Removing and installing / sealing left or right cylinder head cover

Remove the following components:

- Air intake manifold
  (11 61 056 without "both gasket faces")
- Protective cover for distributor cap and ratchet band
- Cylinder head cover with gasket

11 12 105 Removing and installing left cylinder head

Remove the following components:

- Engine (11 00 050)
- Support arm for left engine mount
- Support for left and right assembly frame
- Engine in assembly frame
- Rear left heat shield on A manifold partially installed
- Flexible hoses on left of manifold
- Injection pipe with E valves on left and right
- Ignition line pipe on left and right manifold
- Left and right distributor caps
- Manifold with noise insulation strip on left and right
- Valve cover with gasket on left and right sides
- Distributor finger housing and adapter housing with gasket on left and right
- Drive belt tensioner for alternator
- Timing case cover with gasket
- Chain tensioner
- Top sliding rail for timing chain
- Sprocket wheel on left and right camshaft
- Engine in TDC position, disconnect, check timing
- Sliding rail for left.timing chain
- Upper timing case with gasket
- Coolant connecting duct with gasket and rear O-ring
- Cylinder head screws on left, torque and torsion angle 120°
- Cylinder head with gasket on left
- Measure amount by which piston protrudes
- Clean crankcase
- Clean cylinder head
- Clean base of piston

11 13 010 REMOVING AND INSTALLING OR REPLACING UPPER OIL PAN SECTION

Remove following parts:

- Transmission (23 00 025, 24 00 024)
- Clutch pressure plate on drive plate (only manual transmissions)
- Windshield washing fluid tank
- Oil dipstick guide tube
- Both nuts on bottom engine mounts
- Splash guard
- Drain and fill engine oil
- Level sender plug
- Lower oil pan section
- Clean sealing surfaces
- Level switch
- O-ring
- AC compressor drive belt tensioner
- Drain hose from oil filter to oil pan
- Flywheel
- Ride level control oil pipe holder
- Power pump holder on oil pump

11 14 102 REMOVING AND INSTALLING, SEALING OR REPLACING UPPER TIMING CASE

Remove following parts:

- Both cylinder head covers
- Oil catch tray on timing case cover
- Fan
- Distributor caps left and right, ignition leads
- Distributor arms, adapters and distributor housings left and right
- Alternator drive belt and tighten
- Alternator drive belt tensioner
- Upper timing case cover and gasket
- Set and hold engine in TDC
- Chain tensioner
- Adjust chain tensioner
- Upper chain guide rail
- Both sprockets
- Check timing
- Left guide rail
- Upper timing case and gasket

11 14 110 REMOVING AND INSTALLING, SEALING OR REPLACING LOWER TIMING CASE COVER

Remove following parts:

- Upper timing case (11 14 102)
- Lower oil pan section
- Coolant hose on thermostat housing left, right, upper
- Coolant hose on expansion tank bottom
- Coolant hoses on radiator
- Fill coolant
- AC compressor drive belt tensioner
- Pulley on water pump
- Vibration damper on hub
- Wrench on hub (ST 11 2 230)
- Central bolt for hub
- Hub with puller (ST 00 7 501)
- Upper oil pan section loosened partially
- Timing case cover with seal and gasket (ST 11 1 210, 11 1 220)

ST = Special Tool

11 14 115 REMOVING AND INSTALLING, SEALING OR REPLACING LOWER TIMING CASE

Remove following parts:

- Upper timing case (11 14 102)
- Lower oil pan section
- Lower timing case cover (11 14 110)
- Water pump
- Replace O-ring
- Tensioning rail and chain
- Lower timing case and gasket (ST 11 1 210, 11 1 220)

ST = Special Tool

11 22 000 Replacing flywheel

M70

Remove transmission,
see 23 00 025

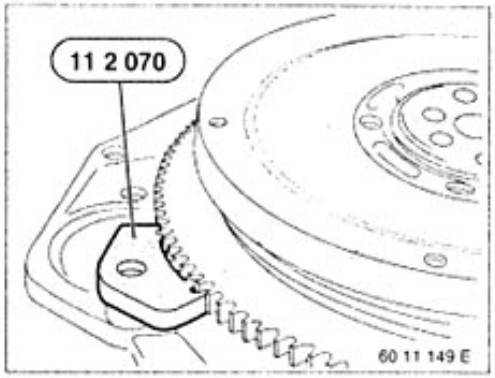

Arrest flywheel with special tool 11 2 070.

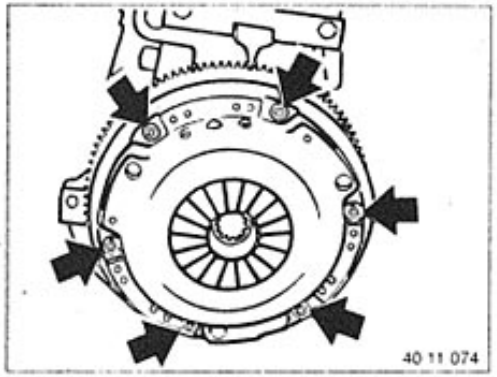

Unfasten screws, applying even pressure.
Remove pressure plate and drive plate.

Installation:
Note dowel pins.
Tightening torque 21 21 1AZ*

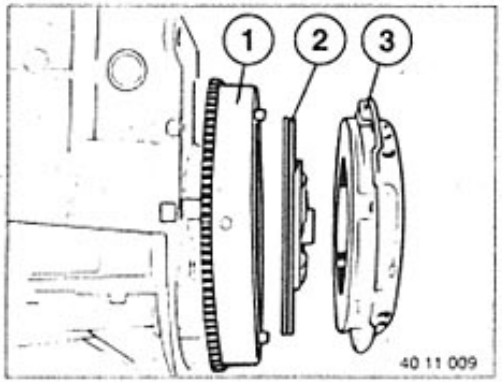

Installation:
1 Flywheel
2 Drive plate
3 Pressure plate

Caution!
Note direction of installation of drive plate.

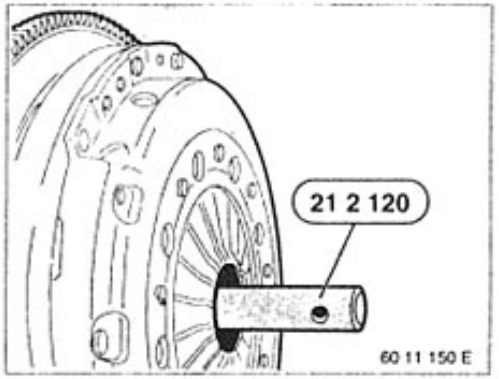

Installation:
Center drive plate with special tool 21 2 120.

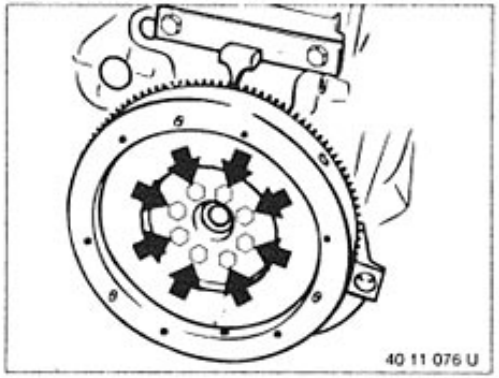

Unfasten flywheel.

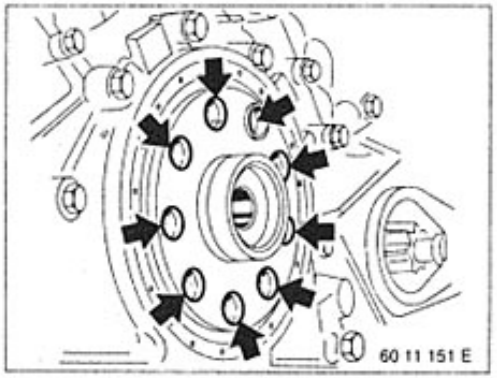

Installation:
Clean thread for flywheel screws in the crankshaft.

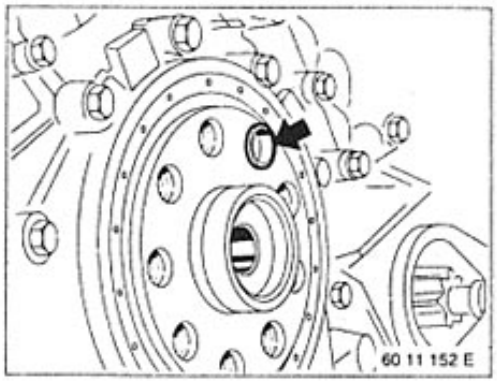

Installation:
Note hollow dowels.
Install new micro-encapsulated screws.
Tightening torque 11 22 1AZ*

* Refer to Technical Data

11 23 031 REPLACING HUB FOR VIBRATION DAMPER

Remove following parts:

- Fan
- Splash guard
- Water pump pulley
- AC compressor drive belt tensioner
- Tighten drive belt
- Alternator drive belt tensioner
- Tighten drive belt
- Vibration damper on hub
- Hub with puller (ST 00 7 501)
- Radial oil seal (with puller)
- Wrench for hub (ST 11 2 230)

ST = Special Tool

11 28 010 REPLACING ALTERNATOR DRIVE BELT

Remove following parts:

- Oil catch tray on timing case
- Fan
- Drive belt

11 31 002 Replacing left or right camshaft

Remove the following components:

- Upper timing case cover
- Finger
- Oil line for camshaft
- Bearing cover for camshaft

11 31 051 Replace timing chain

Remove the following components:

- Lower timing case cover (11 14 110)
- Engine into TDC position
- Tensioning rail and chain

11 33 062 REPLACING ALL HYDRAULIC VALVE CLEARANCE COMPENSATING ELEMENTS

Remove following parts:

- Both cylinder head covers
- Fan
- Drag lever with (ST 11 3 180)
- Hydraulic valve clearance compensating elements

ST = Special Tool

11 51 000 REMOVING AND INSTALLING OR REPLACING WATER PUMP

Remove following parts:

- Splash guard
- Fan
- Alternator drive belt tensioner
- AC compressor drive belt tensioner
- Pulley on water pump
- Coolant hose on thermostat housing left, top and right
- Vibration damper and hub
- Coolant - drain and fill
- Cover for thermostat housing
- Water pump with O-rings

11 53 000 REMOVING AND INSTALLING OR REPLACING COOLANT THERMOSTAT

Remove following parts:

- Splash guard
- Coolant - drain and fill
- Fan
- Cover for thermostat housing

11 61 056 REPLACING SEALING FLANGE FOR LEFT OR RIGHT INTAKE AIR MANIFOLD

Remove following parts:

- Air box complete on firewall
- Cover for fuel injectors
- Upper air cleaner section with air mass sensor
- Plugs on left and right throttle valve assemblies
- Plugs for fuel injectors
- Plugs for pulse sender and cylinder identifier
- Electric plate partially
- Injection pipe complete on manifold
- Fuel feed pipes
- Fuel return pipes
- Fuel injectors with vaseline
- Windshield washing fluid tank if necessary
- Ignition leads on manifold
- Intake air manifold
- Both sealing flanges

11 62 145 REMOVING AND INSTALLING OR REPLACING ALL EXHAUST MANIFOLDS

Remove following parts:

- Upper air cleaner section with air mass sensor left
- Clamp on split pipe left and right
- Heat shields on manifolds left
- Heat shield on steering gear
- * Manifold/split pipe bolts left
- Front manifold with gaskets (left)
- Rear manifold with gaskets (left)
- Nuts on staybolts
- * Staybolts for left manifolds in head
- Upper air cleaner section with air mass sensor right
- Windshield washing fluid tank
- Oil dipstick guide tube
- Heat shields on manifolds right
- Front manifold with gaskets (right)
- Rear manifold with gaskets (right)
- Nuts on staybolts
- Staybolts for right manifolds in head

11 Engine M60

For additional work, refer to “Repair Instructions for 7 Series E38”

General information

M60

Cylinder configuration:

Cylinders 1 ... 4, viewed in direction of travel, are located on the right side of the vehicle, with cylinder 1 at the front.

Cylinders 5 ... 8, viewed in the direction of travel, are located on the left side of the vehicle, with cylinder 5 at the front.

The operations described apply to both cylinder banks: if special explanations are required, the procedures for each cylinder bank are described separately.

General Data for operations on the valve timing system:

If operations on the cylinder head are performed where the camshaft was removed, please note the following:
The hydraulic valve tappets expand without load being applied by the camshaft and, after installation, require some time before they compress back down. This means that, if parts are assembled in rapid sequence, even the "closed" valves may still be open and in direct contact with the piston.

Note the following wait periods between installation of the camshaft and mounting of the cylinder head:

ambient temperature 20° C	4 mins.
10° C - 20° C	11 mins.
0° C - 10° C	30 mins.

After assembly of the camshaft and the timing chain, wait for the following periods before turning the engine crankshaft:

ambient temperature 20° C	after 10 mins.
10° C - 20° C	after 30 mins.
0° C - 10° C	after 75 mins.

General instructions for work involving the gaskets:

Apply a bead of cement to all contact points and a thin, even coat of Hylomar SQ 32M** to determine the location of the gaskets.

** Refer to BMW Parts Service

11 00 039 Checking compression of all cylinders

M60

Caution!
High voltage – danger of death!
Interrupt power supply to ignition coils.
Follow instructions on compression testing,
refer to General Data MG12
Repair Instructions for 7 Series E38

Disconnect fuel pump relay and DME master relay (installation: electronics box),
refer to Electrical Troubleshooting Manual (schematics) 8 Series E31
Directory of components 7000.0

After checking interrogate fault memory and if necessary rectify faults. Cancel fault memory.
Subsequent procedure,
refer to 11 00 039
Repair Instructions Series 7 E38

00 00 249 BMW engine oil service

M60

Change engine oil and oil filter

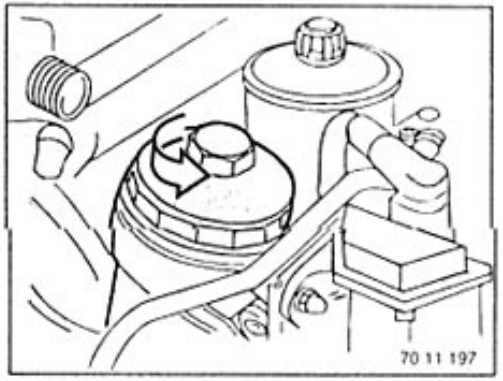

Unscrew and remove oil filter cover.

Note:
Oil flows out of the oil filter housing into the oil pan.

Installation:
Tightening torque 11 42 2AZ*

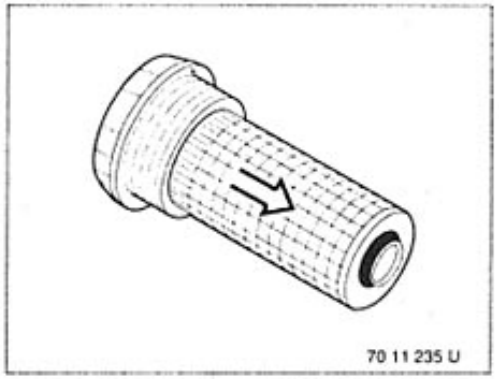

Remove oil filter from the oil filter cover.

Installation:
Note installation direction of the oil filter insert. Oil filter insert must engage in the oil filter cover.

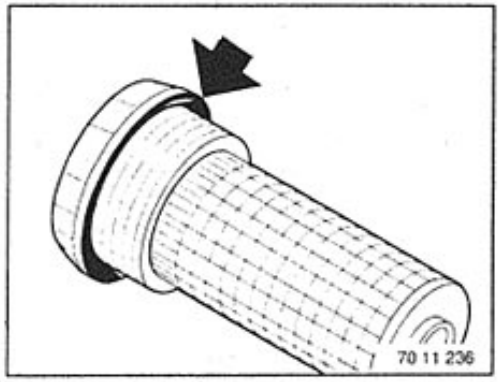

Installation:
Fit new seal.

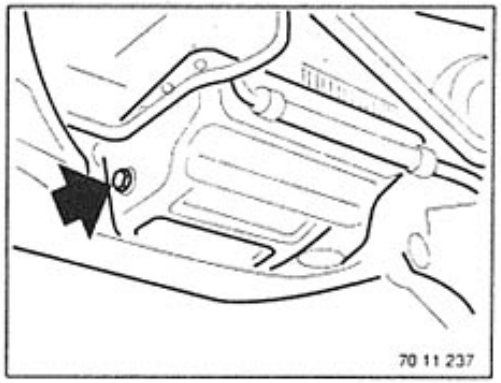

Once the oil has drained out of the oil filter housing, open the oil drain plug or draw off the oil.

Installation:
Replace seal.
Tightening torque 11 13 1AZ*

Top up the engine oil level.

Switch on engine and run at idle speed until the oil display lamp goes out.

Switch off engine and check the oil level.

Note:
Vehicle on level ground.

* Refer to Technical Data

Refer to Technical Data

11 00 050 Removing and installing engine (M60)

Interrogate the fault memory in all the control units.
Follow instructions on disconnecting and connecting battery, refer to General Data HG12
Disconnect battery ground lead.
Remove automatic transmission,
refer to 24 00 026

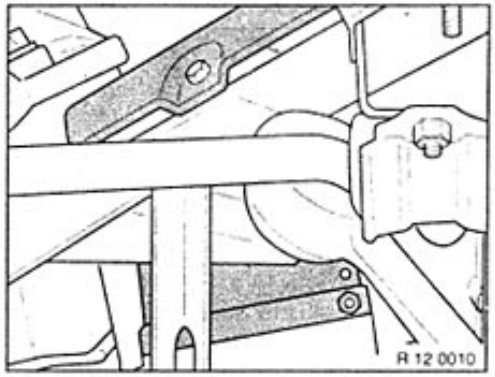

Remove left and right rear heat baffle plates.

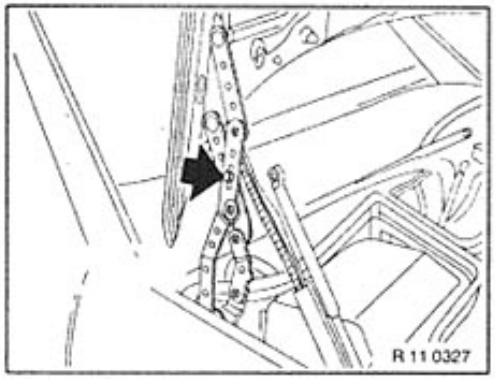

Lift engine hood into assembly position. Fully extend gas strut on engine hood, fully open engine hood and secure with one screw on each side (left and right).

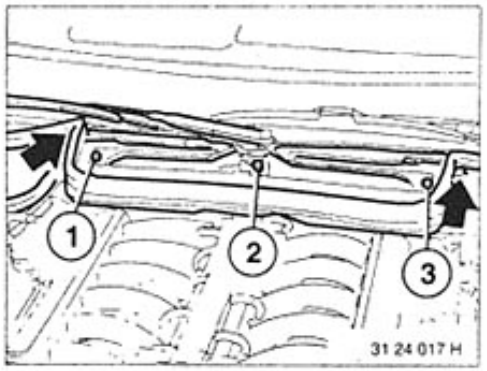

Partially remove rubber seal from air manifold.
Twist mounting (1 ... 3).
Remove screws on left and right sides.

Remove radiator with expansion tank, refer to 17 11 000.

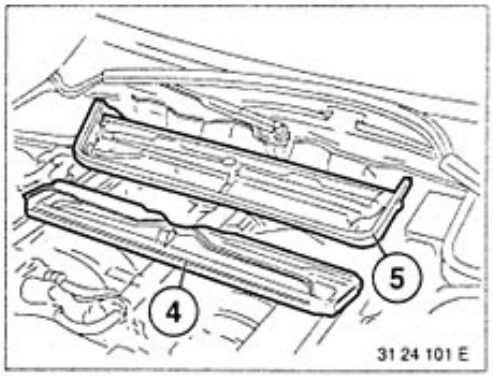

Lift off trim (4) and microfilter (5).

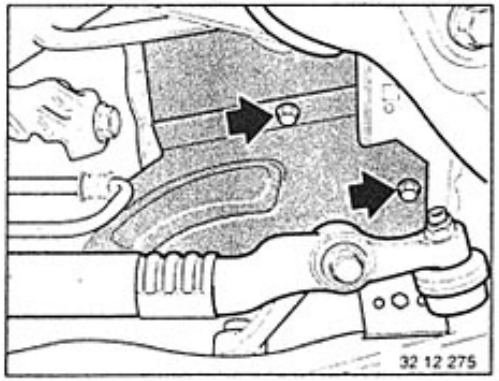

Remove left and right heat baffle plates from front axle carrier.

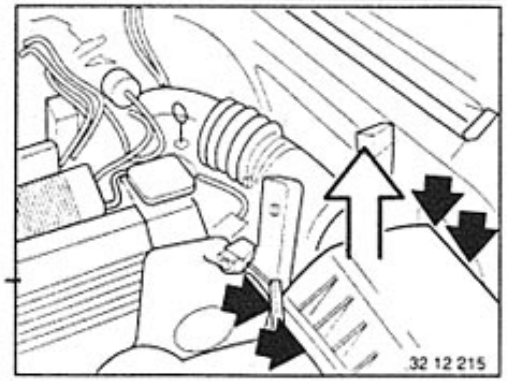

Remove upper section of suction filter with mass air flow sensor.

Remove left and right cable ducts.
These operations are described in the section on Removing Cylinder Head, see 11 12 004.

Note:
If necessary, disconnect the connectors beside the timing cases if this facilitates the task of lifting out the engine.

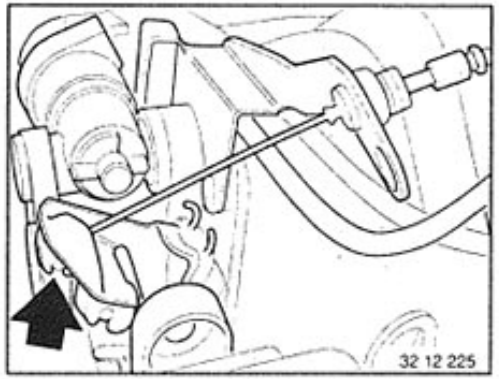

Disconnect accelerator cable.
Press together both lugs on the nipple mount and press out the actuating lever.

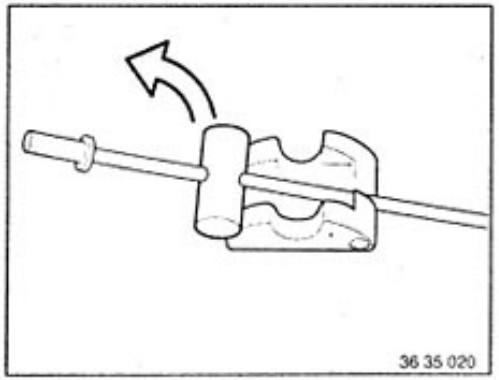

Press nipple out of nipple mount.
Remove Bowden cable from nipple mount.

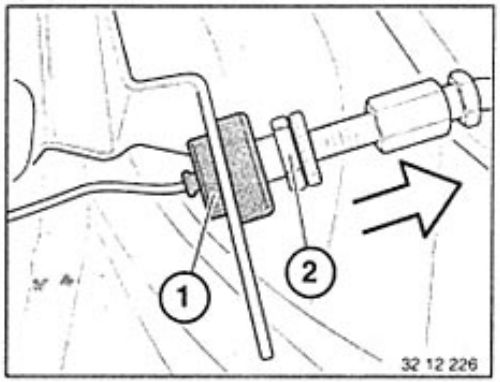

Remove Bowden cable (2) from rubber mount (1).
Press rubber mount (1) out of bracket.

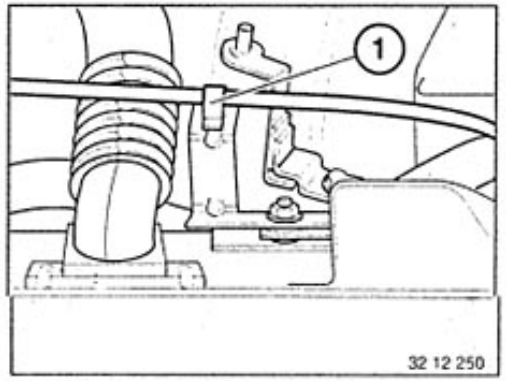

Remove accelerator cable from guide (1) and place to one side.

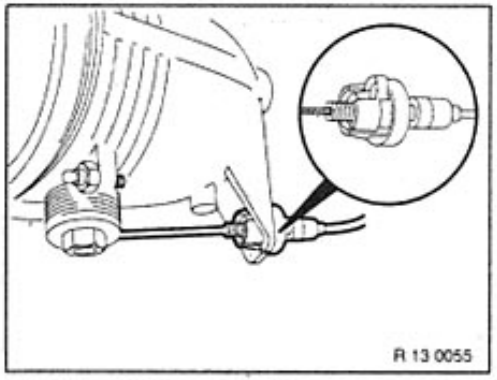

Press plastic locking unit in and remove Bowden cable from ASC throttle valve.

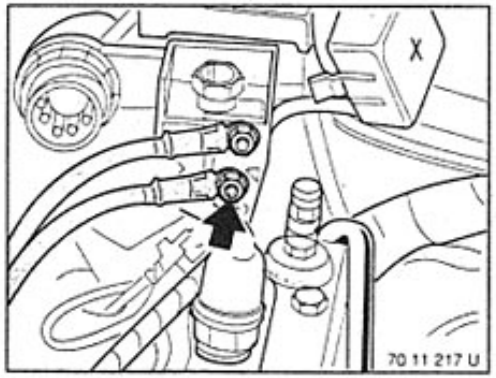

Disconnect cable from positive terminal.

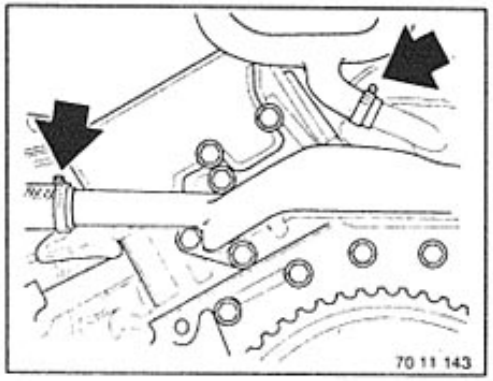

Remove heating hoses from coolant manifold and coolant tube between heating firewall and engine.

Remove 3-phase alternator, see 12 31 020.

Remove complete main flow oil filter, see 11 42 020.

Unfasten vane pump from bracket and tie to one side, see 32 41 060 Repair Instructions for 7 Series E32.

Note:
Lines remain connected.

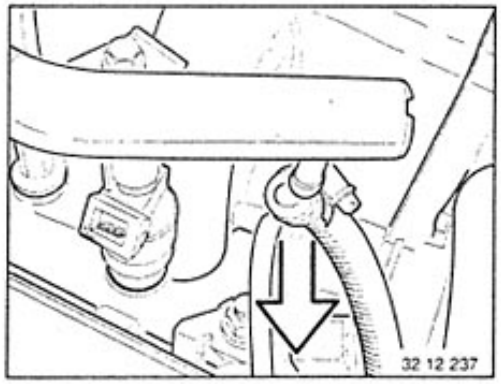

Caution!
Catch fuel as it escapes.

Remove fuel intake and fuel return lines on injection tube.

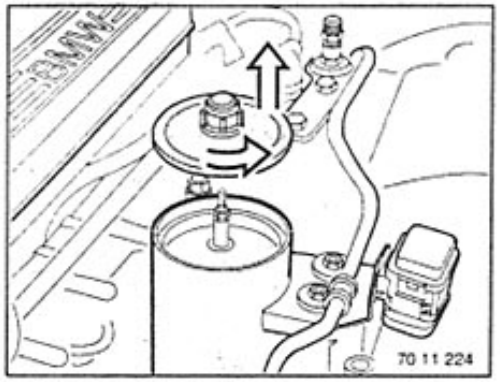

Draw off oil from container for power steering.

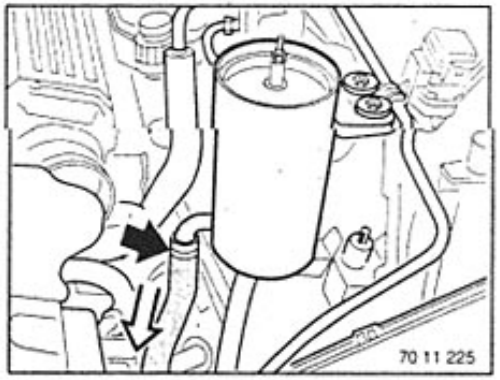

Remove hose from oil container.

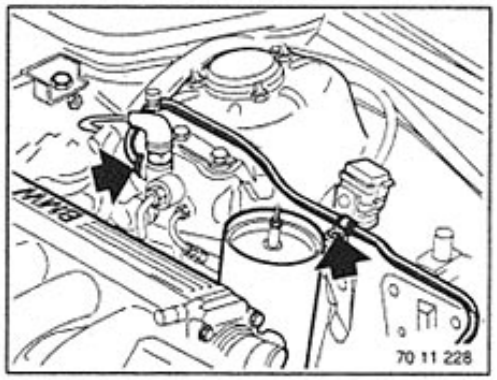

Remove bracket and hydraulic line from 3-phase governor.

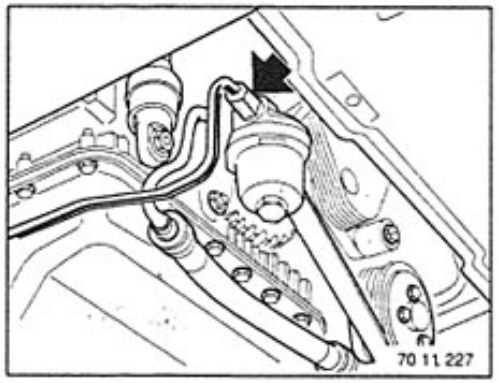

If necessary, remove hydraulic line for ASC+T filter and remove from lower section of oil pan.

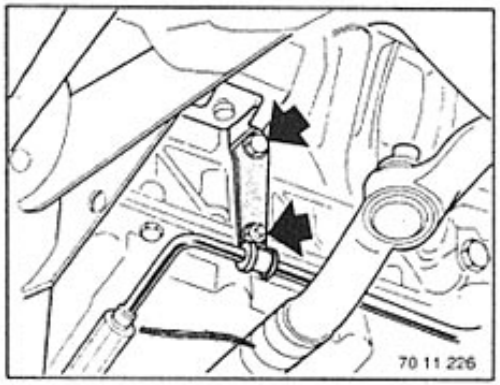

Unfasten hydraulic line from back of lower section of oil pan.

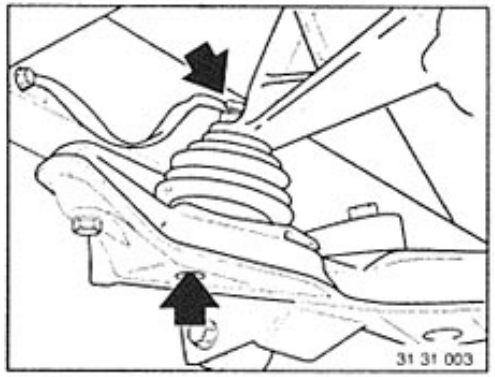

Unfasten left and right engine mounts.
Remove ground tape from engine support arm.

Installation:
Tightening torque 11 81 1AZ / 2AZ*

Unfasten air conditioning compressor from support block, see 64 52 020.

Note:
Lines remain connected.

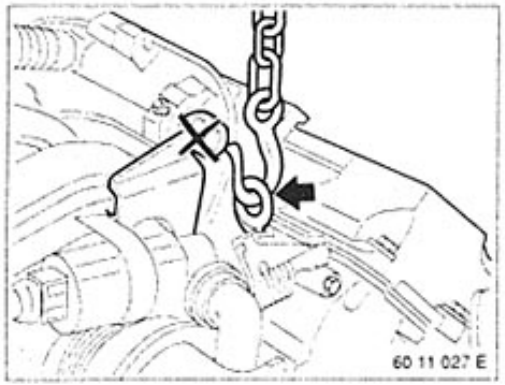

Caution!
Only lift engine using the mounting lugs provided for this purpose.

Arrangement of front engine mounting.

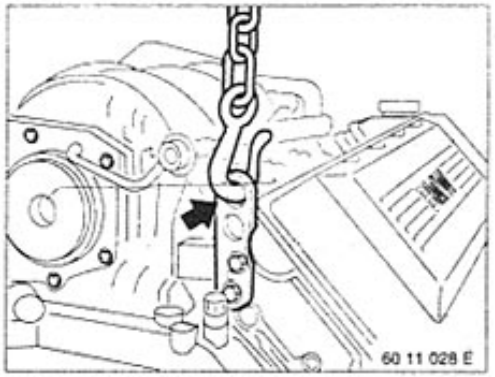

Arrangement of rear engine mounting.

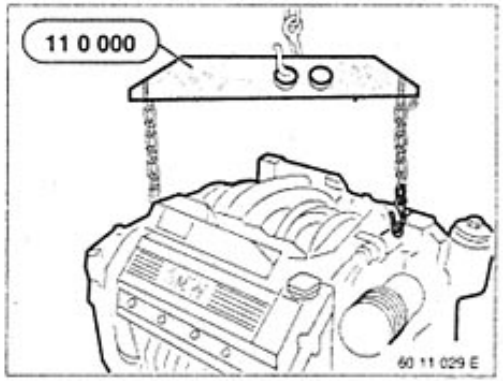

Lift out engine using special tool 11 0 000.

* Refer to Technical Data

11 12 004 Removing and installing / sealing both cylinder head covers

M60

Read out error memories of all control units.
Disconnect battery negative lead.

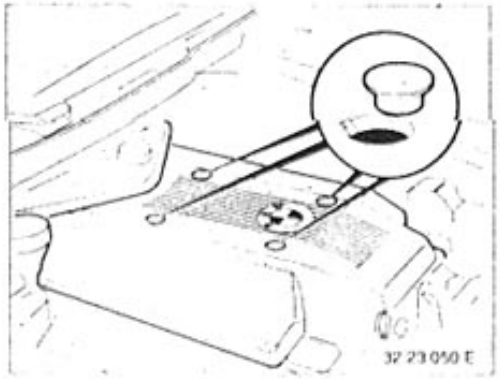

Lever clips off manifold cover.
Unscrew bolts.
Remove cover and insulation material.

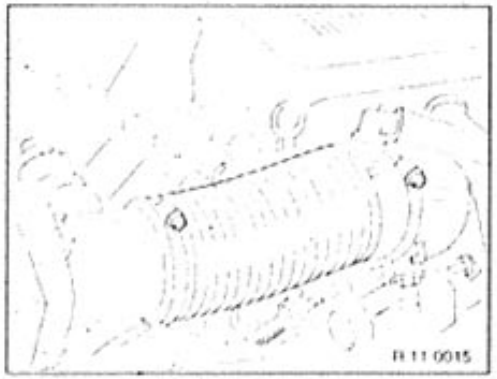

Remove hose to idle speed actuator and remove dust cover between throttle body and mass air flow sensor.

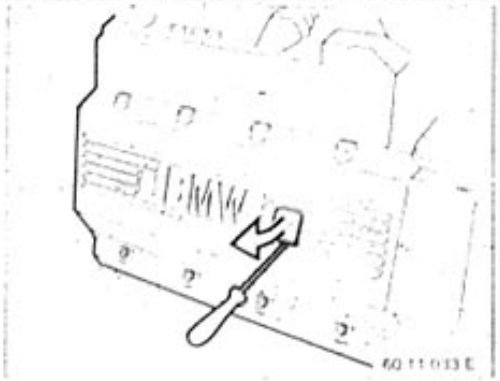

Remove covers from ignition coils.

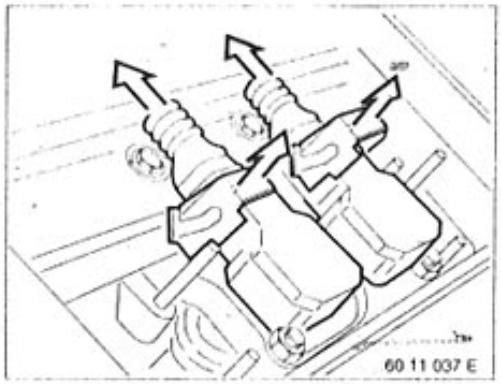

Remove connectors from ignition coils on both cylinder banks.

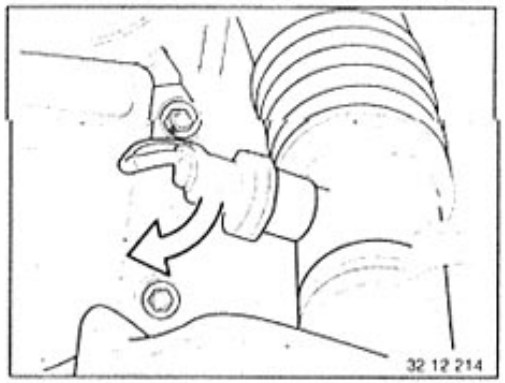

Disconnect plug connection on mass air flow sensor.

Remove tank venting valve from bracket, see 13 90 500.

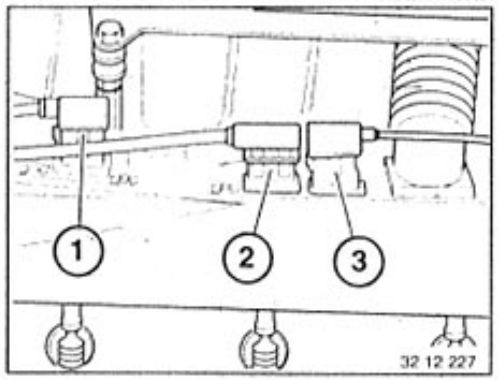

Disconnect all plug connections on left cable duct:
(1) camshaft sensor
(2) and (3) knock sensors

Caution!
Incorrect installation of plug connections (2) and (3) causes engine damage.
Note instructions,
see 12 14 610 / 611.

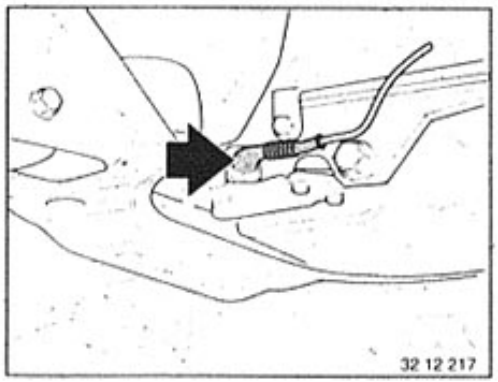

Disconnect plug connection on oil level switch.
Remove cable guide to oil level switch.

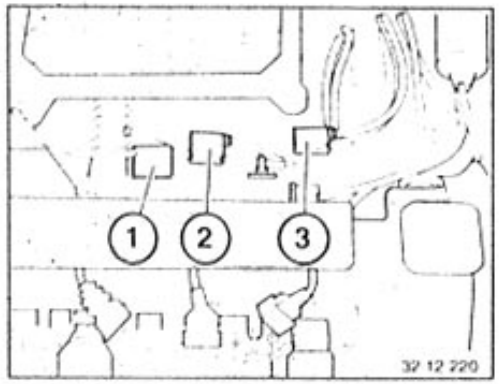

Disconnect all plug connections on right cable duct:
(1) and (2) knock sensors
(3) TDC sensor

Caution!
Incorrect installation of plug connections (1) and (2) causes engine damage.
Note instructions,
see 12 14 610 / 611.

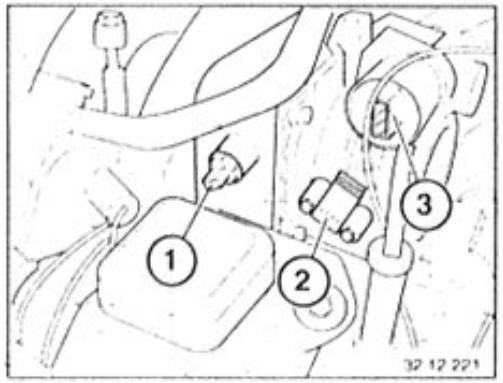

Disconnect plug connections:
(1) temperature sensor for intake air
(2) throttle valve potentiometer
(3) idle speed actuator

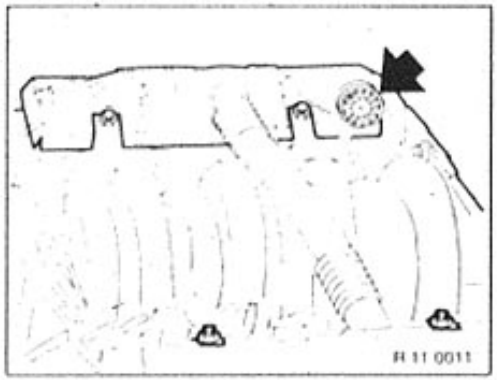

Disconnect engine connector from left and right cable ducts.

Remove left and right cable ducts from bracket and fold to one side.

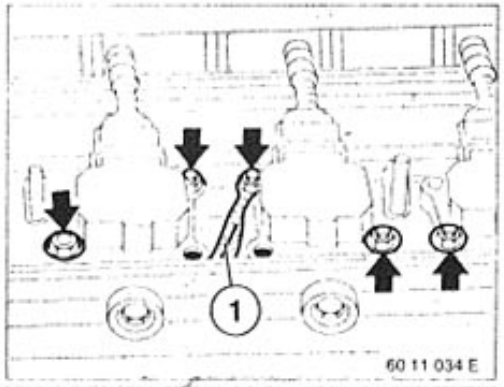

Remove ignition coils from both cylinder banks, see 12 13 011.

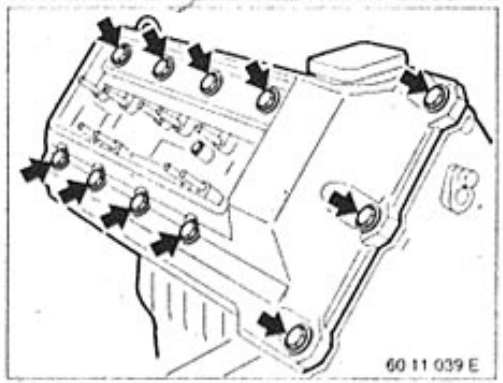

Unfasten left and right retainers.

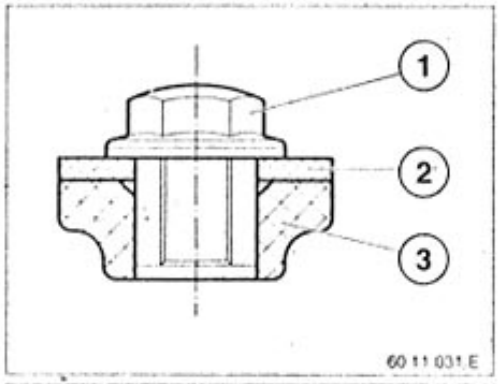

Installation:
Layout of retaining elements:
(1) nut
(2) washer
(3) rubber seal

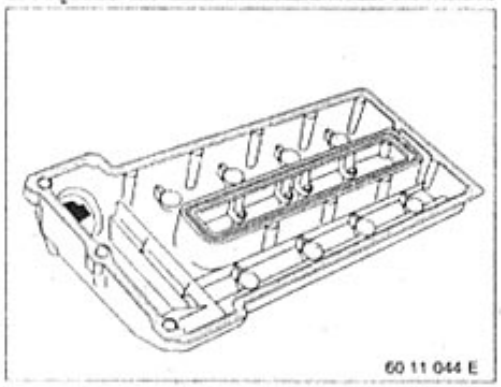

Installation:
Check gasket and replace if necessary.

Coat the entire circumference of the outer and inner groove and the sealing face of the cylinder head cover with rubber anti-friction compound, e.g. glycerine**.
Press the inner gasket into the cover groove with no torsional stress, starting at the four corner radii.

** Source of Supply: BMW Parts Service

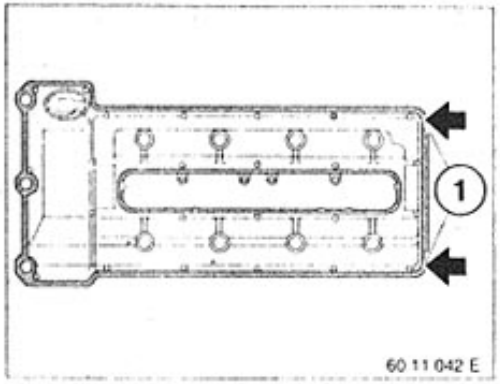

Installation:
Align outer gasket loosely over the cover groove. Secure gasket in the cover groove, starting at the four reverse corners (1) and press into groove with no torsional stress.

Installation:
Coat the contact faces of the joint with Hylomar SQ 32 M** liquid sealing compound.

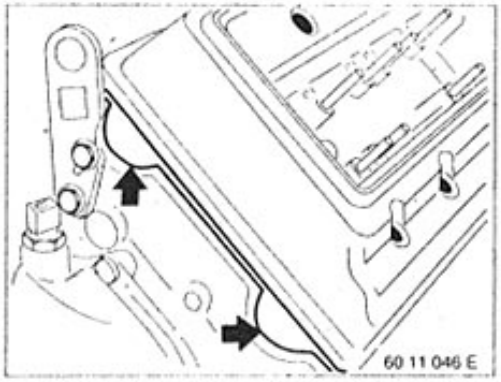

Installation:
Check for correct seating of gasket on back of cylinder head when installing the cylinder head cover.

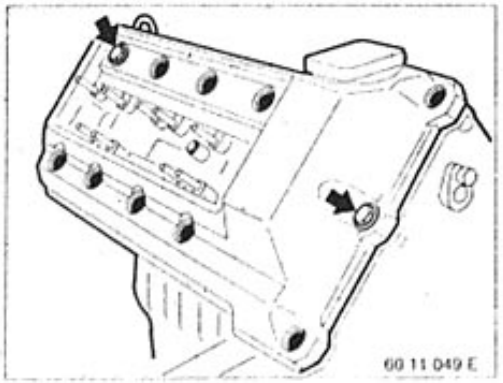

Installation:
Attach two retainers to the locating points, without preload at this stage, and align the cover. Install all the other retaining elements and tighten crosswise, radiating out from the center.

** Source of Supply: BMW Parts Service

11 12 005 Removing and installing / sealing left cylinder head cover

M60

This operation is described in the section on removing and installing / sealing both cylinder heads,
see 11 12 004 .

11 12 006 Removing and installing / sealing right cylinder head cover

M 60

This operation is described in the section on removing and installing / sealing both cylinder heads,
see 11 12 004 .

11 12 105 Removing and installing left cylinder head

M60

Remove right pop-up headlight,
refer to 63 12 460

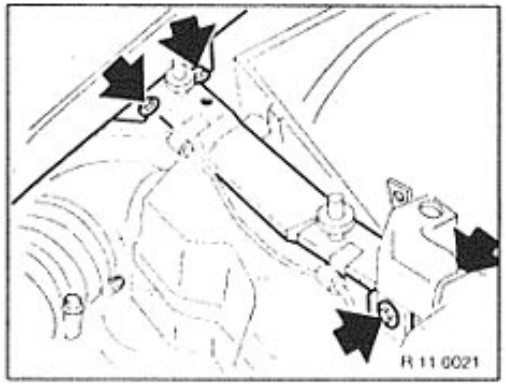

Remove support for pop-up headlights and lower section of intake filter housing.

Remove both cylinder head covers,
refer to 11 12 004

Remove intake air manifold,
refer to 11 61 050

Remove coolant manifold,
refer to 11 53 325

Remove both left exhaust manifolds,
refer to 11 62 142

Unfasten air conditioning compressor from mount,
refer to 64 52 020

Note:
Lines remain connected.

Subsequent procedure.
refer to 11 12 105
Repair Instructions Series 7 E38

11 12 106 Removing and installing right cylinder head

M60

Remove right pop-up headlight,
refer to 63 12 460

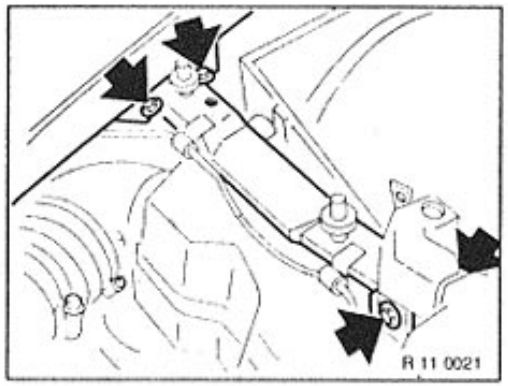

Remove support for pop-up headlights and lower section of intake filter housing.

Remove both cylinder head covers,
refer to 11 12 004

Remove intake air manifold,
refer to 11 61 050

Remove coolant manifold,
refer to 11 53 325

Remove both right exhaust manifolds,
refer to 11 62 143

Unfasten air conditioning compressor from mount,
refer to 64 52 020

Note:
Lines remain connected.

Subsequent procedure.
refer to 11 12 106
Repair Instructions for 7 Series E38

11 12 107 Removing and installing both cylinder heads

M60

This operation is described in section on removing and installing right / left cylinder heads,
refer to 11 12 105 / 106

11 12 110 Replacing left cylinder head gasket

M60

This operation is described in section on removing and installing right / left cylinder heads,
refer to 11 12 105

11 12 111 Replacing right cylinder head gasket

M60

This operation is described in section on removing and installing right / left cylinder heads,
refer to 11 12 106

11 12 112 Replacing both cylinder head gaskets

M60

This operation is described in section on removing and installing both cylinder heads,
refer to 11 12 107

11 13 010 Removing and installing or replacing upper section of oil pan

M 60

Remove exhaust assembly, see 18 00 020.

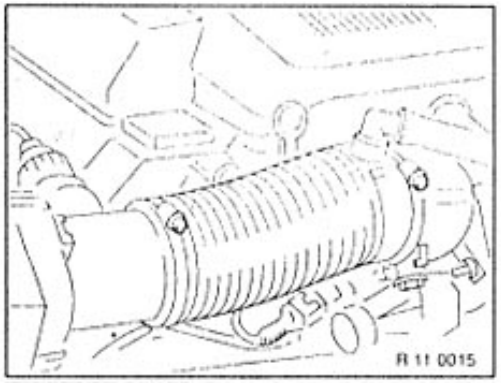

Pull off hose to idle speed actuator and remove dust cover between throttle body and mass air flow sensor.

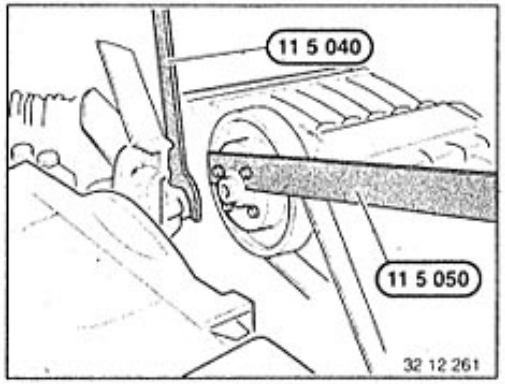

Remove fan.
Use special tools 11 5 040 and 11 5 050.

Caution!
Left-hand threads.

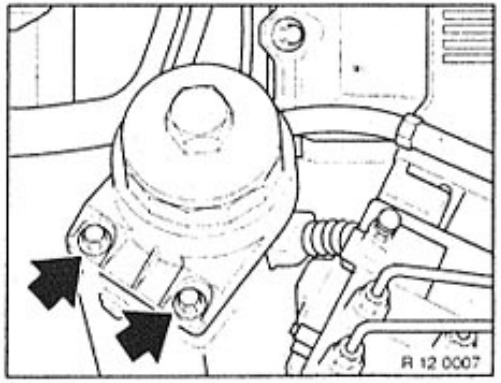

Unfasten full-flow oil filter, lift out of bracket and press forwards.

Note:
Hoses remain connected.

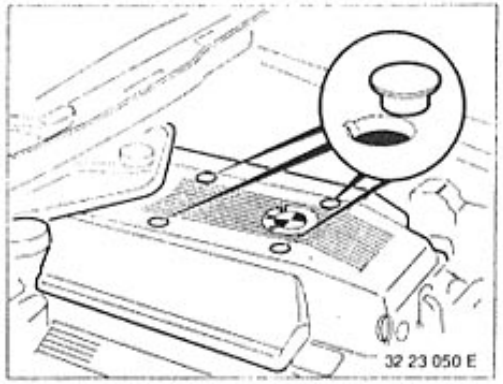

Lever clips out of manifold cover.
Unscrew bolts.
Remove cover together with noise insulation.

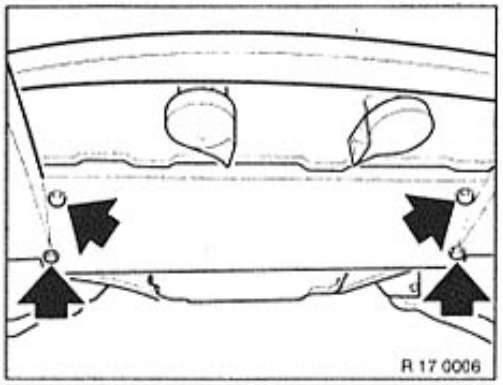

Unscrew and remove splash guard.

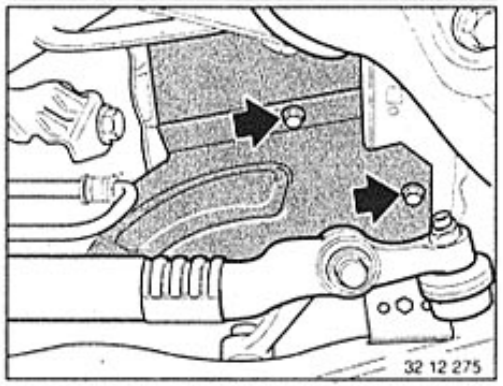

Remove left and right heat baffle plates from front axle carrier.

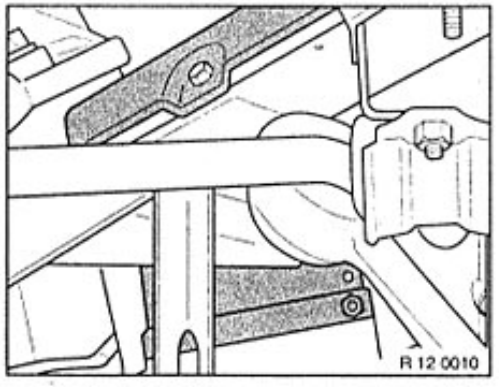

Remove left and right rear heat baffle plates.

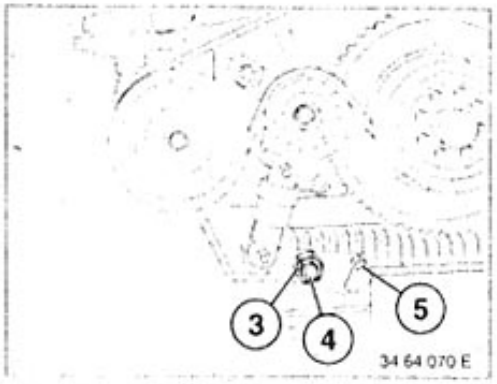

Remove adjustment plate and drive belt from air conditioning compressor, see 64 52 020.

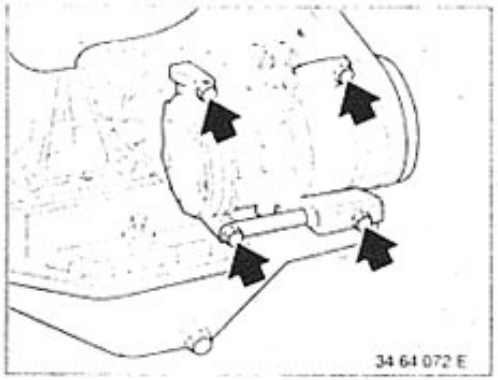

Unfasten air conditioning compressor from mounting bracket, see 64 52 020.

Note:
Lines remain connected.

Remove alternator drive belt, see 11 28 010.

Unfasten vane pump from bracket, see 32 41 060 Repair Instructions for the 7 Series E32.

Note:
Lines remain connected.

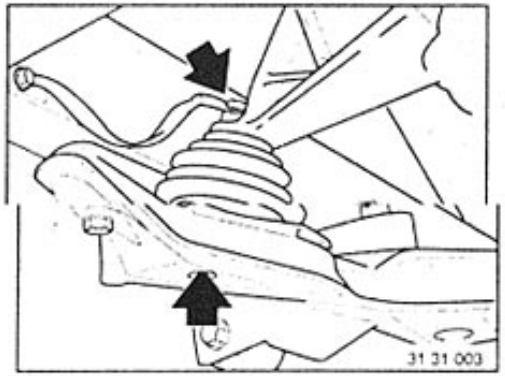

Unscrew left and right engine mounts. Remove ground tape from engine supporting arm.

Installation:
Tightening torque 11 81 1AZ / 2AZ*

* Refer to Technical Data

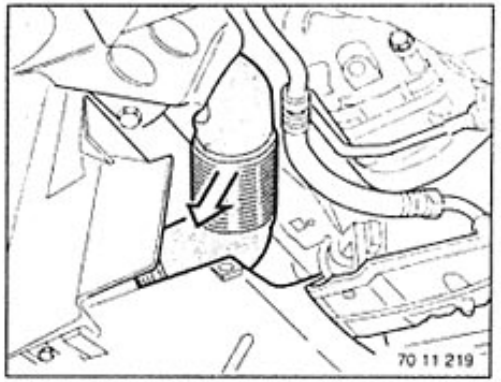

Remove cooling air guide for 3-phase alternator.

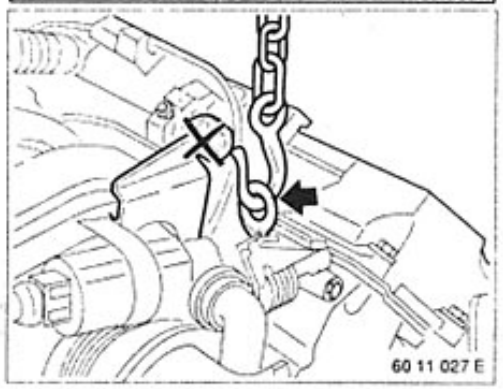

Lift up front of engine with special tool 00 0 200.

Important!
Note gap between engine and splash guard.

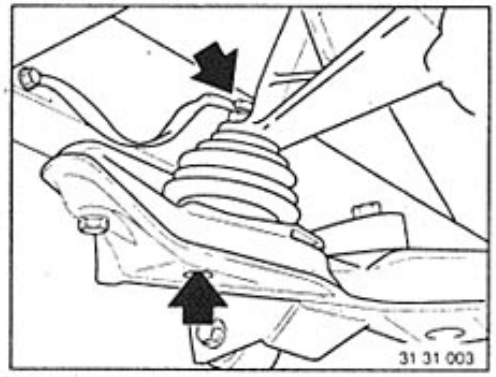

Remove right engine mount.

Unfasten mounting bracket for air conditioning compressor.

Unfasten dip stick guide from oil pan.

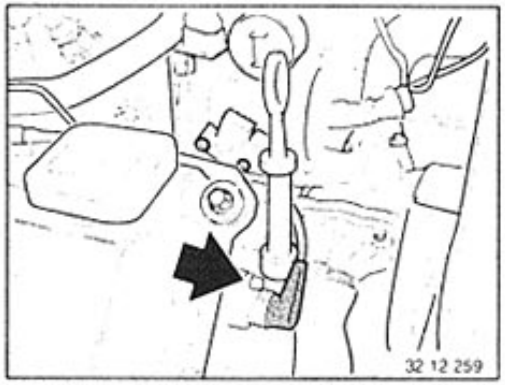

Remove camshaft sensor.

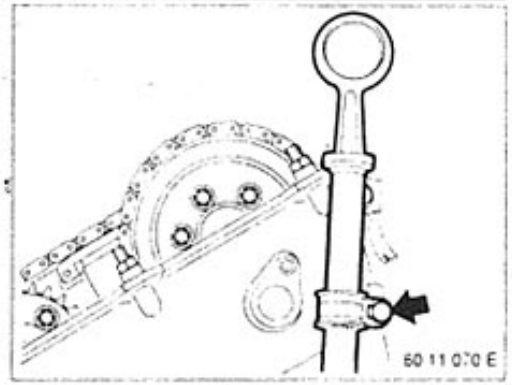

Remove tank venting valve from bracket, see 13 90 500.

Unfasten top of dip stick guide.

Unfasten water hose from bracket between expansion tank and water pump.

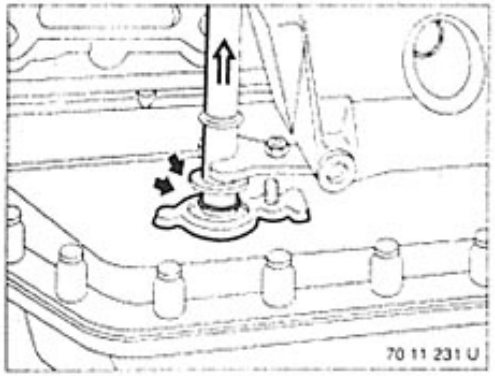

Remove dip stick guide by pulling upwards.

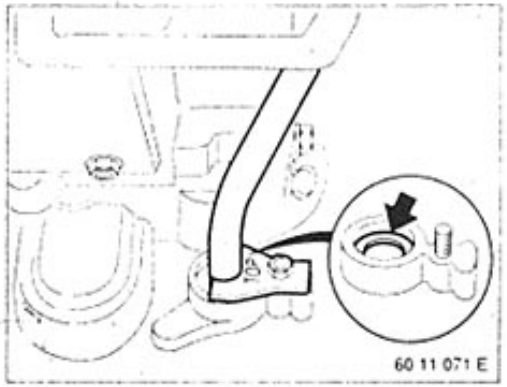

Installation:
Pull water hose to one side.
Place disc and O-ring in oil pan bore.
If necessary, replace O-ring.

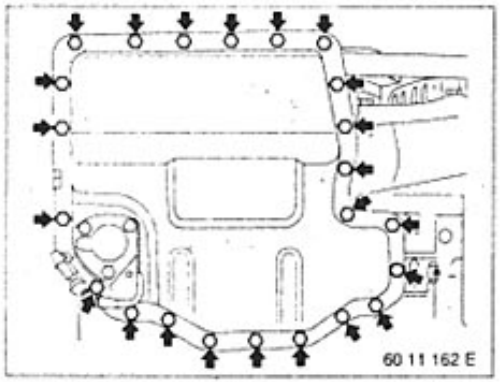

Remove complete lower section of oil pan, see 11 13 020.

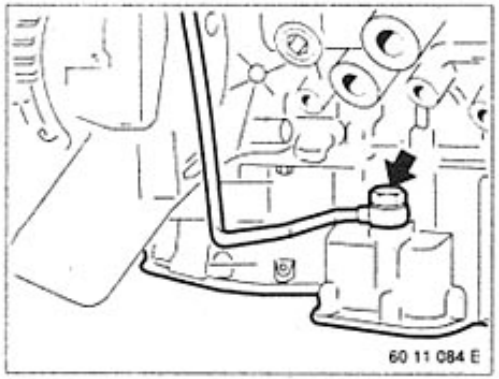

Remove return line between oil filter and oil pan.

Installation:
Replace the sealing ring.

Remove oil lines for automatic transmission from vane pump.

Remove oil pump, see 11 41 000.

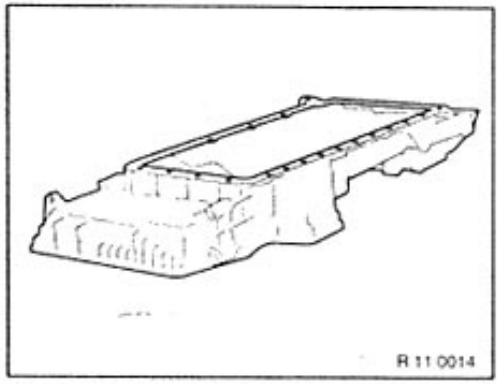

Unfasten screws in oil pan.
Remove upper section of oil pan by pulling forwards.

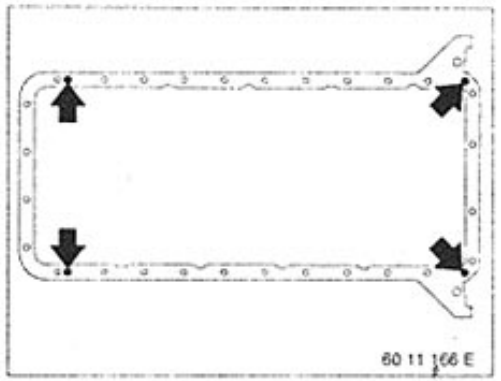

Installation:
Clear sealing faces of gasket residue and clean.
Coat contact edges of sealing face with liquid sealing compound Hylomar SQ 32 M**
Replace seal.

Installation:
Insert all screws in oil pan.
Fit screws on transmission end without preload. Tighten screws on engine end.
Tighten screws on transmission end.

* Source of Supply: BMW Parts Service

11 13 020 Removing and installing or replacing lower section of oil pan

M 60

Drain engine oil.
This operation is described in the section on the BMW engine oil service,
see 00 00 249.

Remove underbody protection from engine.

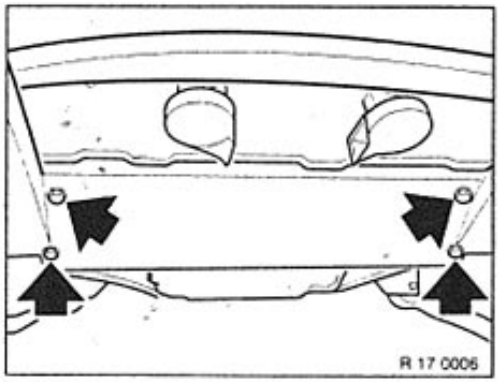

Disconnect plug connection on oil level switch.

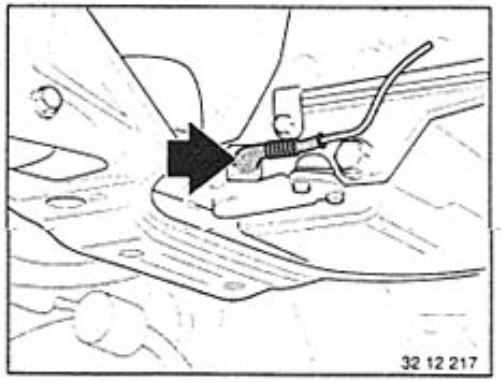

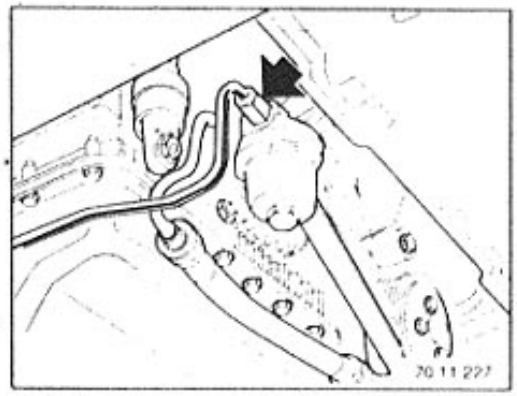

If necessary, unfasten hydraulic line for ASC+T from filter.

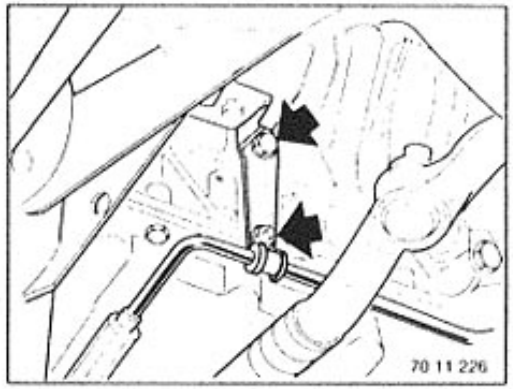

Unfasten hydraulic line from lower section of oil pan.

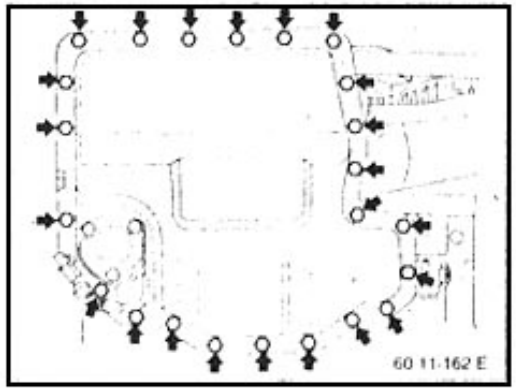

Unfasten screw connection from lower section of oil pan.

Installation:
Clean sealing faces and fit new gasket.

11 14 080 Removing and installing, sealing or replacing top left timing case cover

M60

Remove left cylinder head cover. This operation is described in the section removing and installing / sealing both cylinder head covers, see 11 12 004 .

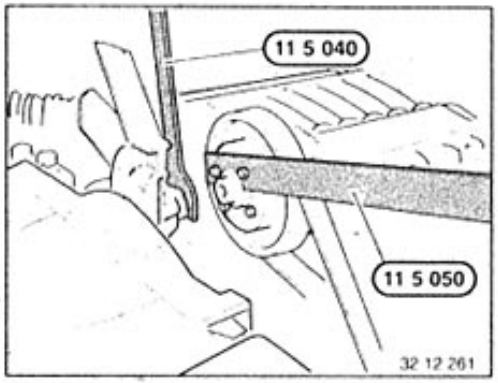

Remove fan cowl.
Use special tool 11 5 040 and 11 5 050.

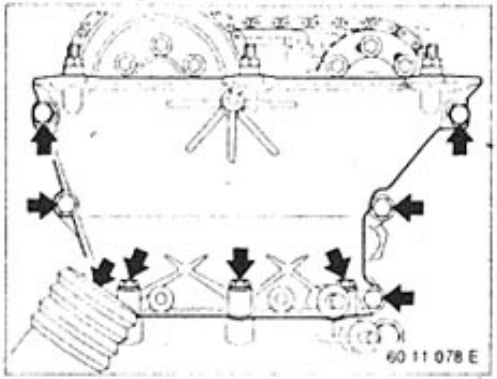

Disconnect positive battery lead from alternator, unfasten retaining screws from protective pipe and place line to one side.

Unscrew bolt connection on timing case cover.

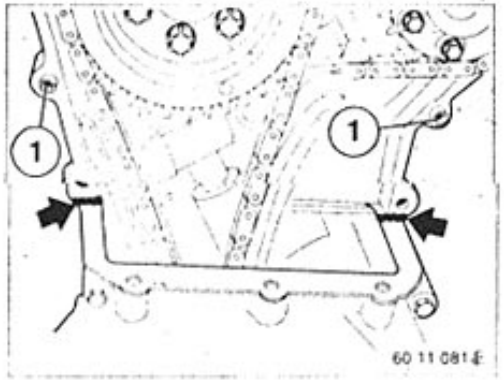

Installation:
Ensure that hollow dowels are correctly located (1).
Coat the edges of the joint between cylinder head and cylinder head gasket with liquid sealing compound Hylomar SQ32 M**.

* Source of Supply: BMW Parts Service

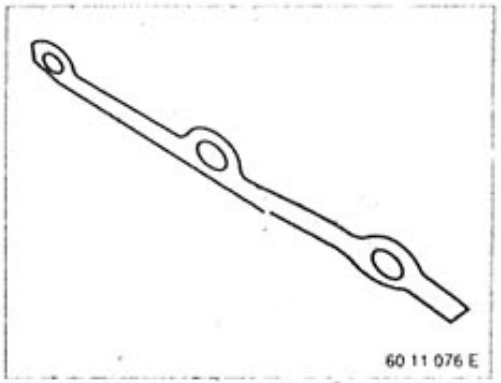

Installation:
Sealing faces clean and free of oil.
Replace gasket.

Caution!
Remove protective film.

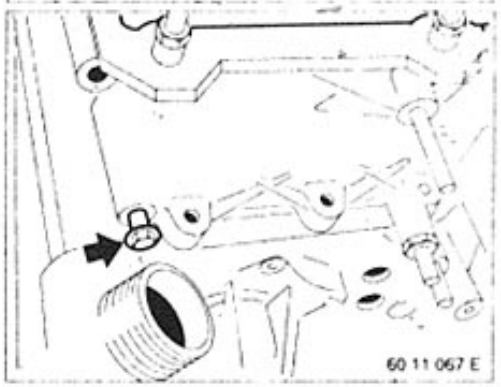

Installation:
Ensure that gaskets are correctly seated, fit timing case cover with screw inserted.

Caution!
It is not possible to install the screw afterwards.

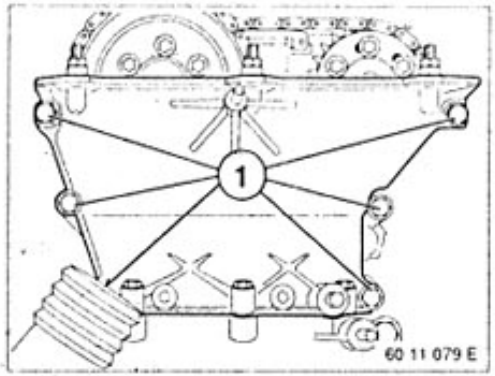

Installation:
Install all screws.
Tighten screw connection (1) until flush with cylinder head.

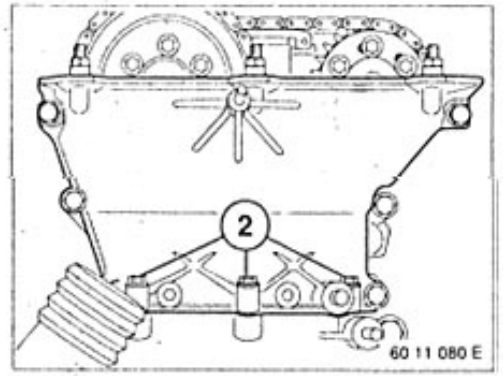

Installation:
Tighten screw connection (2) on timing case cover in two stages.
Then tighten the screw connection to the cylinder head in two stages.

11 14 085 Removing and installing, sealing or replacing top right timing case cover

M60

Remove right cylinder head cover. This operation is described in the section on removing and installing / sealing both cylinder head covers,
see 11 12 004 .

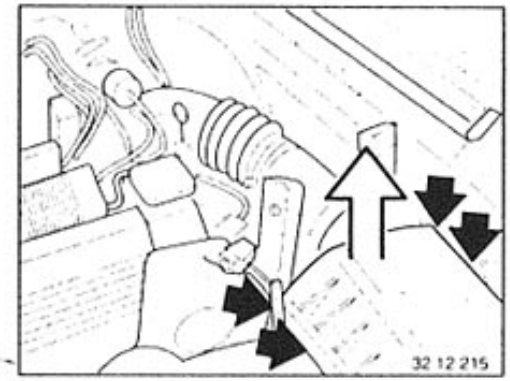

Remove upper section of air intake housing with mass air flow sensor.

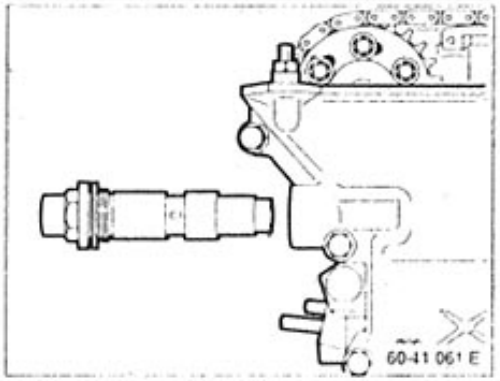

Remove chain tensioner.

Installation:
Replace seal.
Tightening torque 11 31 7AZ*

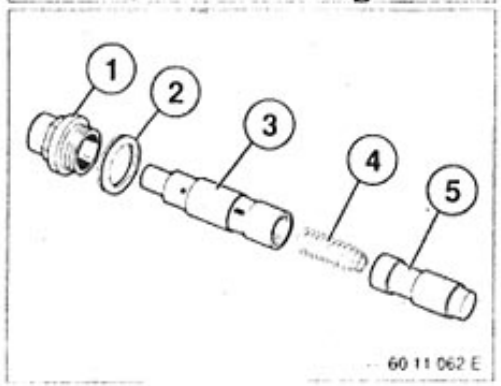

Arrangement of components:
(1) Screw plug
(2) Sealing ring
(3) Sleeve
(4) Recoil spring
(5) Hydraulic piston

Installation:
Tapered end of recoil spring (4) points towards hydraulic piston (5).

* Refer to Technical Data

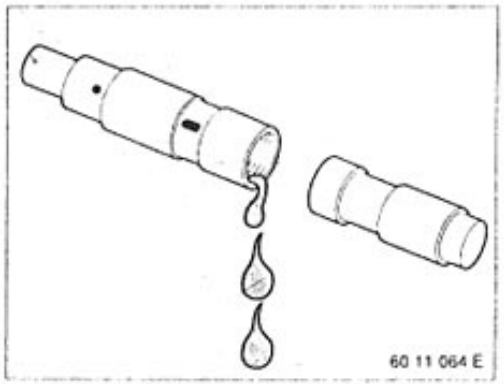

Installation:
To facilitate assembly operation, drain oil chamber between sleeve and hydraulic piston.

Replace the sealing ring.
Tightening torque 11 31 7AZ*

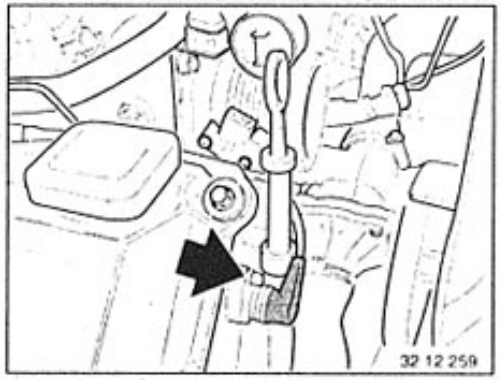

Remove camshaft sensor.

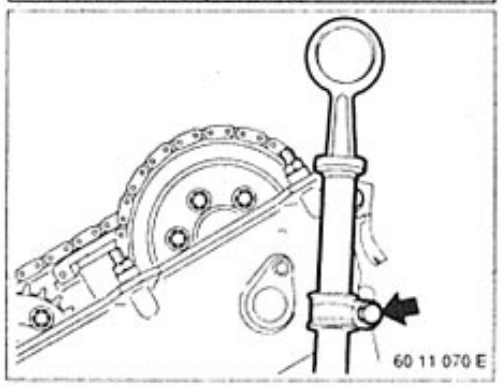

Unfasten upper screw on dipstick guide.

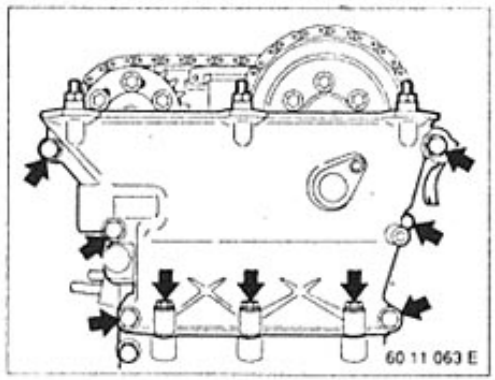

Unfasten screws in timing case cover.

* Refer to Technical Data

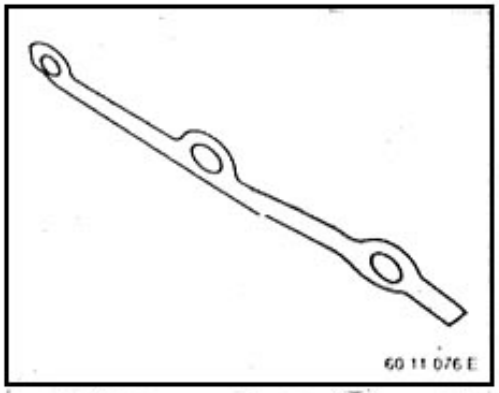

Installation:
Sealing faces clean and free of oil.
Replace gasket.

Caution!
Remove protective film.

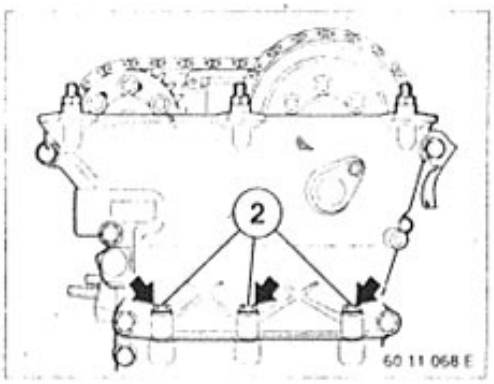

Installation:
Tighten screws on timing case cover (2) in two stages.
Then tighten the remaining screws (1) in two stages.

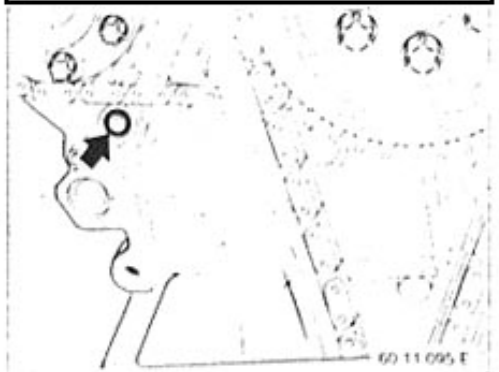

Caution!
Replace sealing ring in cylinder head for oil supply of chain tensioner.

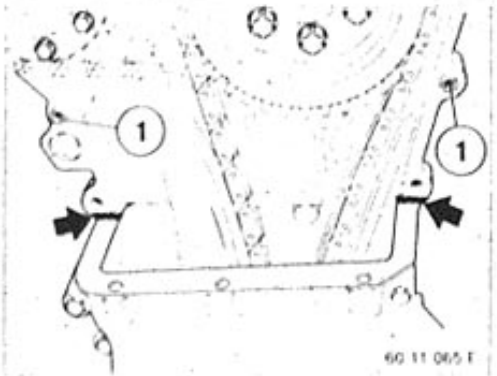

Installation:
Ensure that hollow dowels are correctly located (1).
Coat the edges of the joint between cylinder head and cylinder head gasket with liquid sealing compound Hylomar SQ32 M**.

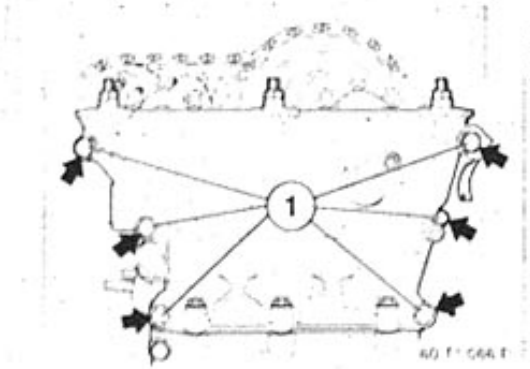

Installation:
Ensure that gaskets are correctly seated.
[illegible]
Fit timing case cover.
Install all screws.

Fit screw connection flush to cylinder head (1).

** Refer to BMW Parts Service

11 14 141 Replacing radial seal in lower timing case cover

M60

Refer to Repair Instructions for the 5 Series E34.

11 14 151 Replacing radial crankshaft seal

Transmission side

M60

Refer to Repair Instructions for the 5 Series E34.

11 22 000 Removing and installing or replacing the flywheel

M60

Refer to Repair Instructions for 5 Series E34.

11 23 010 Removing and installing or replacing vibration damper

M60

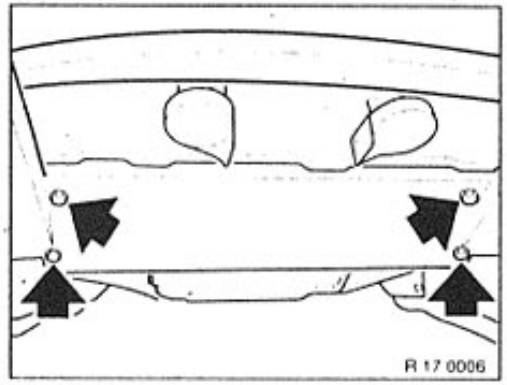

Remove underbody protection from engine.

Subsequent procedure,
see Repair Instructions for 5 Series E34.

11 23 031 Removing and installing or replacing hub for vibration damper

M60

Remove vibration damper,
see 11 23 010.

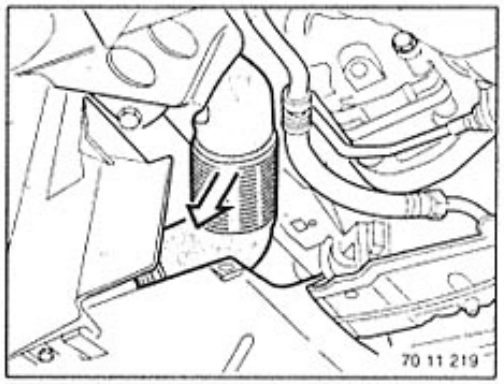

Remove cooling air duct for 3-phase alternator.

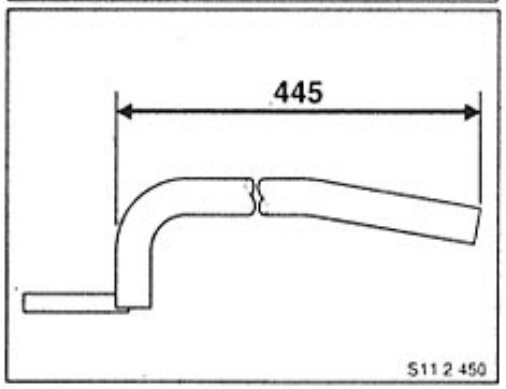

If necessary, shorten end of special tool
11 2 450 to the specified dimension.

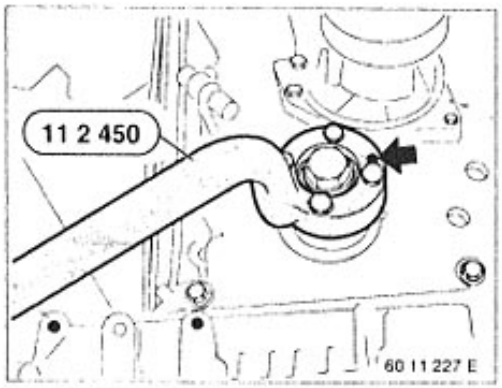

Caution!
Note dowel pin.

Screw special tool 11 2 450 firmly to hub of vibration damper.
Unfasten central screw.

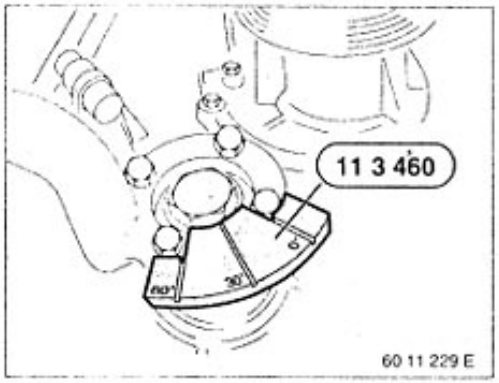

Installation:
Attach special tool 11 3 460 to special tool 11 2 450.

Note:
Special tool 11 3 460 is magnetic.

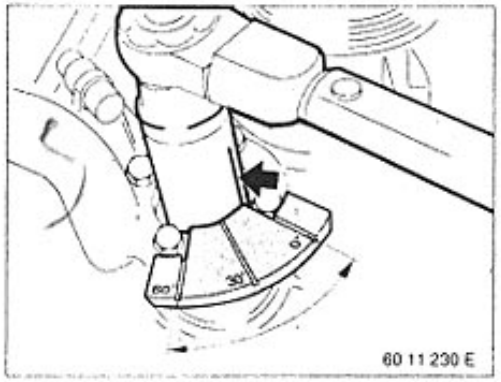

Installation:
Tighten central screw to jointing torque.
Tightening torque 11 23 2AZ*
Select 0° position and mark on the socket head.
Tighten central screw with torsion angle.
Tightening torque 11 23 2AZ*

* Refer to Technical Data

11 28 010 Repiacing drive belt for alternator

M60

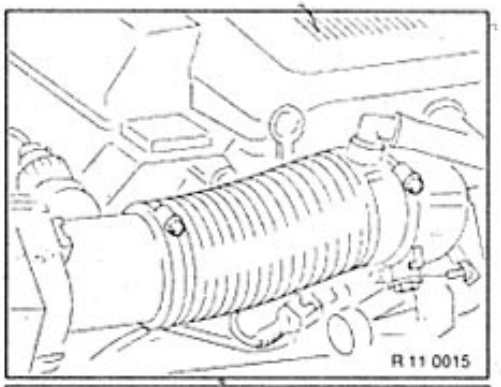

Remove hose from idle speed actuator and remove gaiter between throttle body and mass air flow sensor.

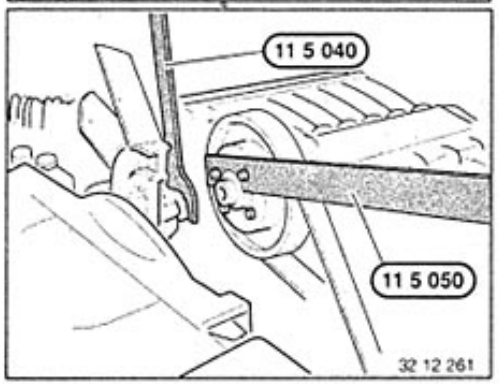

Remove fan.
Use special tools 11 5 040 and 11 5 050.

Caution!
Counterclockwise thread

Installation:
Tightening torque 11 52 1AZ*

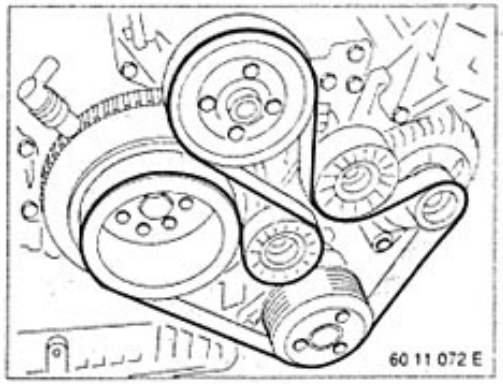

Arrangement of drive belt guide.

* Refer to Technical Data

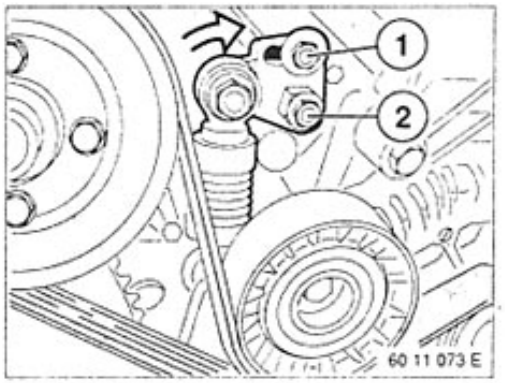

Unfasten nuts (1) and (2) and relieve tension on belt drive.
Remove Vee belt.

Installation:
Check Vee belt for coolant and oil residue, replacing if necessary.

Caution!
Always replace Vee belt if contaminated with hydraulic oil.

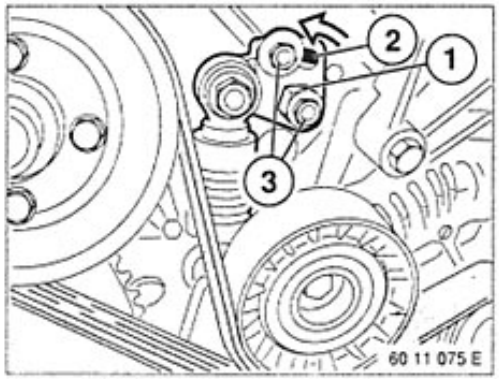

Installation:
Fit Vee belt and check that pulley wheels are correctly located.
Preload adjusting plate on hex head (1) until it contacts the end of the long bore (2) and tighten nuts (3).

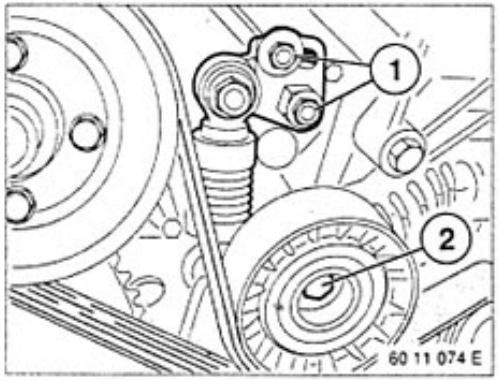

Note:
To remove the complete belt tensioning fixture, unfasten nut (1) and screw (2).

11 31 010 Adjusting timing of camshaft(s)

M60

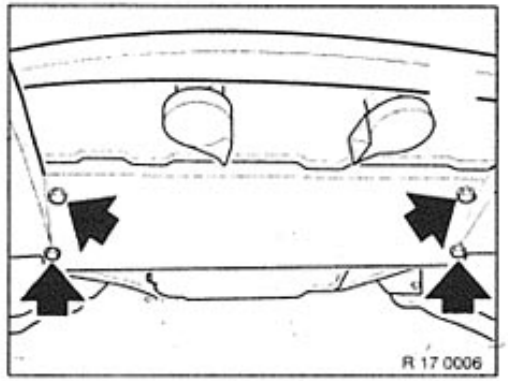

Remove underbody protection from engine.

Unfasten air-conditioning compressor from mounting block,
refer to 64 52 020

Note:
Lines remain connected.

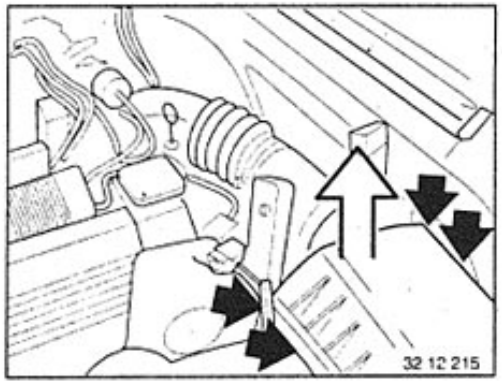

Remove complete upper section of air intake filter together with mass air flow sensor.

Remove active carbon filter,
refer to 16 12 010

Remove pop-up headlights,
refer to 63 12 460

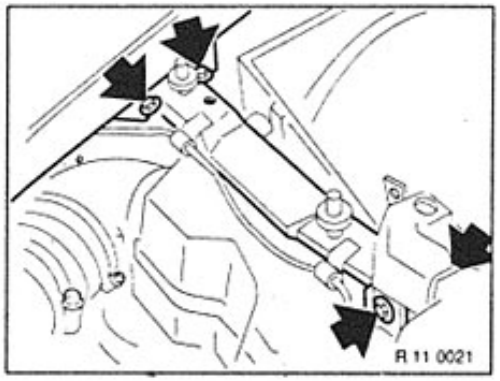

Remove support for pop-up headlights.
Remove complete lower section of air intake filter housing.

Subsequent procedure,
refer to 11 31 010
Repair Instructions for 7 Series E38

11 31 011 Replacing left camshaft

(inlet or exhaust side, as applicable)
Cylinder bank 5 - 8

M60

Preliminary work in accordance with "Adjusting timing of camshaft(s)",
refer to 11 31 010

Subsequent procedure,
refer to 11 31 011
Repair Instructions for 7 Series E38

11 31 015 Replacing right camshaft

(inlet or exhaust side, as applicable)
Cylinder bank 1 - 4

M60

Perform preliminary work in accordance with "Adjusting timing of camshaft(s)"
refer to 11 31 010

Subsequent procedure,
refer to 11 31 015
Repair Instructions for 7 Series E38

11 41 000 Removing and installing or replacing oil pump

M60

see Repair Instructions for 5 Series E34.

11 42 020 Removing and installing, sealing or replacing complete full-flow oil filter

M60

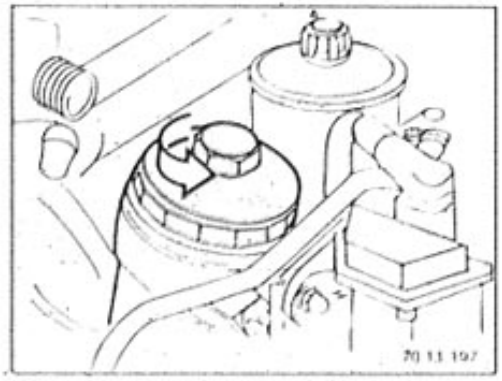

Note:
Do not damage full-flow oil filter cover: only open and tighten using a socket nut.
Unfasten full-flow filter cover to enable engine oil to flow back into the oil pan.

Installation:
Fit new seal.
Tightening torque 11 42 2AZ*

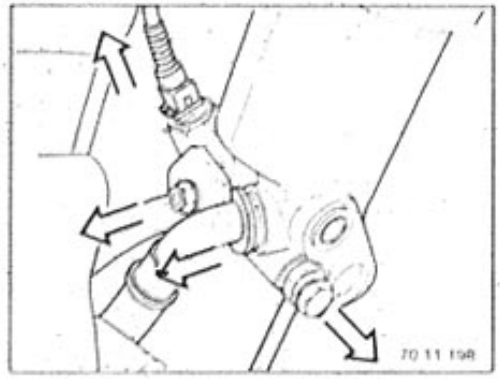

Disconnect plug connection on oil pressure switch

Remove oil lines from full-flow filter housing.

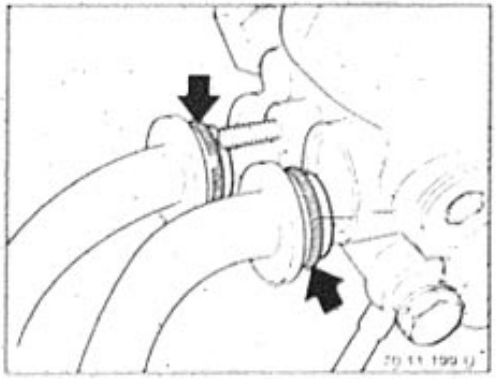

Installation:
Fit new seals.

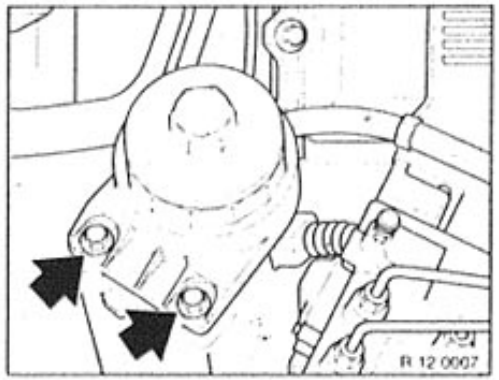

Unfasten full-flow filter housing and lift out of bracket.

Installation:
If necessary, replace oil filter.
Check oil level and top up oil if necessary.

* Refer to Technical Data

11 51 000 Removing and installing or replacing water pump

M60

Remove coolant hose between expansion tank and water pump.

For subsequent procedure,
see Reparair Instructions for 5 Series E34.

11 51 011 Replacing pulley wheel on water pump

M60

see Repair Instructions for 5 Series E34.

11 53 000 Removing and installing or replacing coolant thermostat

M60

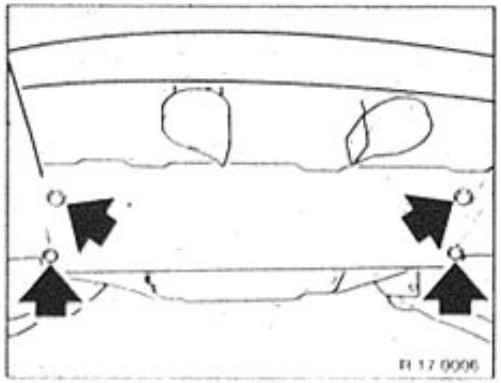

Remove underbody protection from engine.

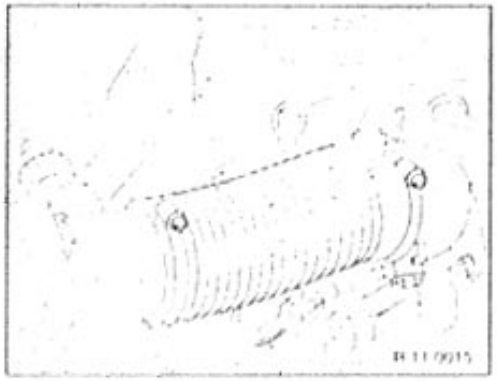

Remove hose to idle speed actuator and remove gaiter between throttle body and mass air flow sensor.

Subsequent procedure,
see Repair Instructions, 5 Series E34.

11 53 325 Removing and installing or replacing coolant manifold

M60

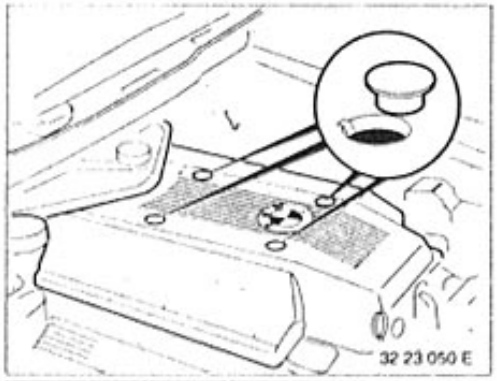

Lever clips off manifold cover.
Unfasten screws.
Remove cover together with acoustic insulation.

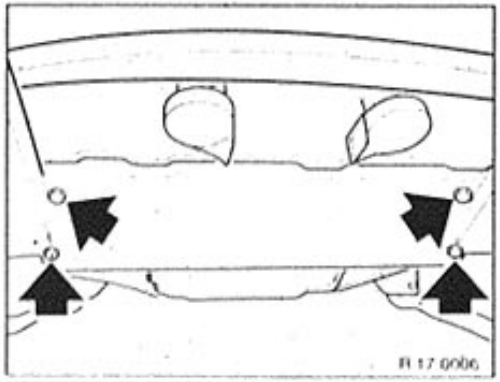

Remove underbody protection from engine.

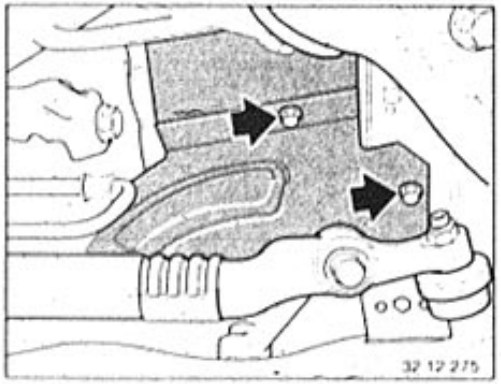

Remove left and right heat baffle plates from front axle carrier.

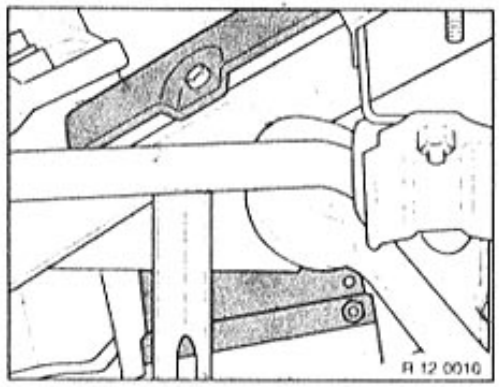

Remove rear left and right heat baffle plates.

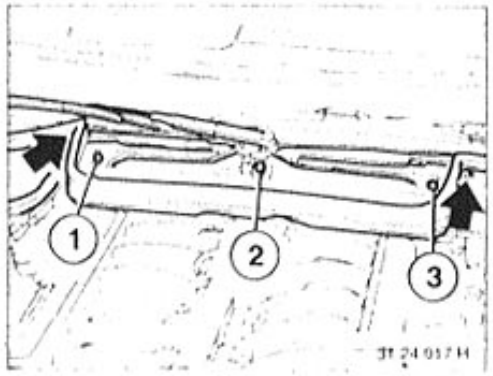

Partially remove rubber seal from air manifold.
Twist retainers (1...3).
Unscrew and remove screws on left and right sides.

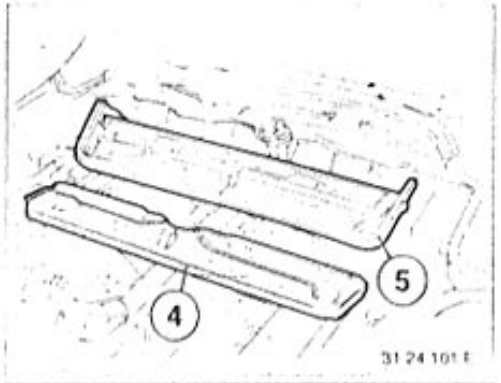

Lift out trim section (4) and microfilter (5).

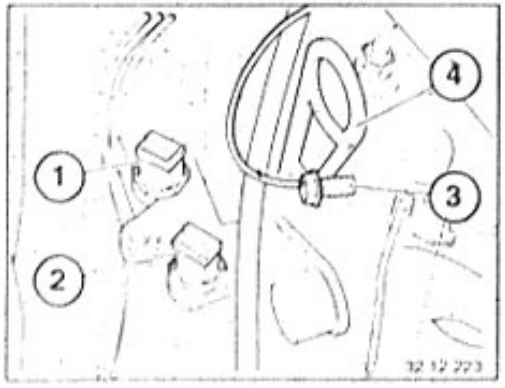

Disconnect plug connections:
(1) Temperature sensor for remote thermometer (black)
(2) Temperature sensor for control unit on Digital Motor Electrics (white)

Unscrew beside engine mount (4) behind shared ground wire for the ignition coils (3).

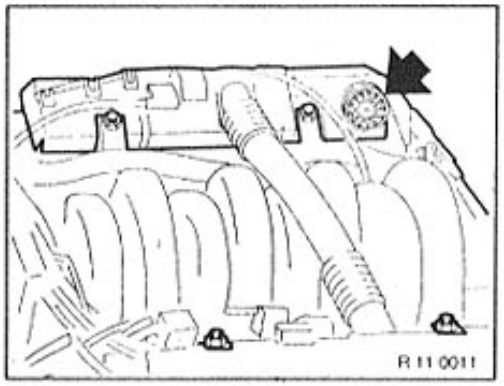

Disconnect engine connector from left and right cable ducts.

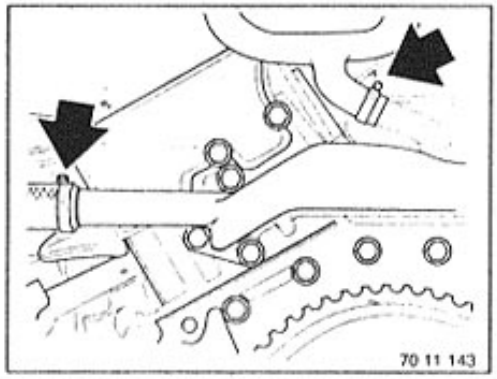

Drain off coolant,
see 17 00 039.

Remove coolant hoses from coolant manifold.

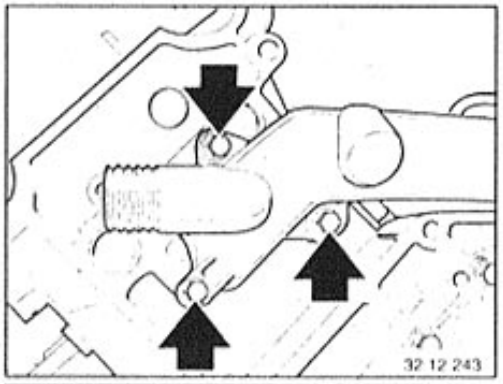

Unfasten screw connection from coolant manifold.

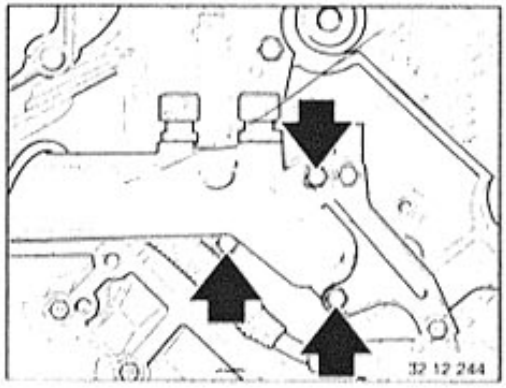

Unfasten screw connection on coolant manifold.

Installation:
Clean sealing faces and replace gaskets.

Top up coolant.
Bleed cooling system and check for leaks,
see 17 00 039.

11 61 050 Removing and installing air intake manifold

M60

Interrogate fault memory.
Switch off ignition.

Remove left and right cable duct.
These operations are described in the section on Removing Both Cylinder Heads,
see 11 12 004.

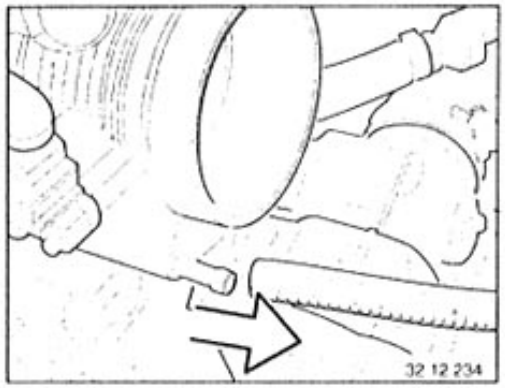

Remove tank vent hose from throttle body.

Disconnect accelerator cable and Bowden cable from ASC throttle valve.
This operation is described in Removing and Installing the Engine,
see 11 00 050.

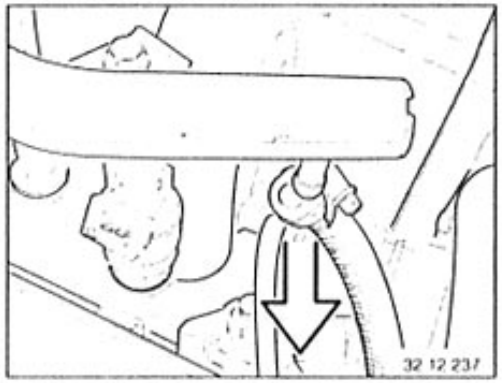

Caution!
Catch escaping fuel.

Remove fuel inlet and return lines from injection tube.

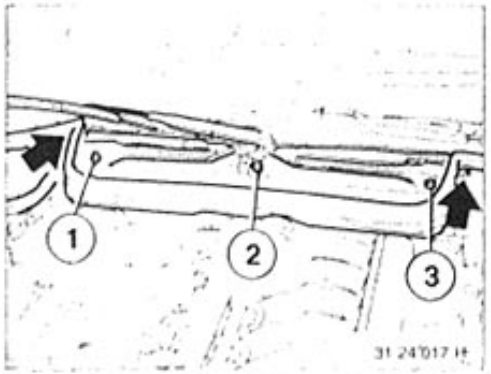

Partially remove rubber seal from air manifold.
Twist retainers (1 ... 3).
Unscrew and remove left and right screws.

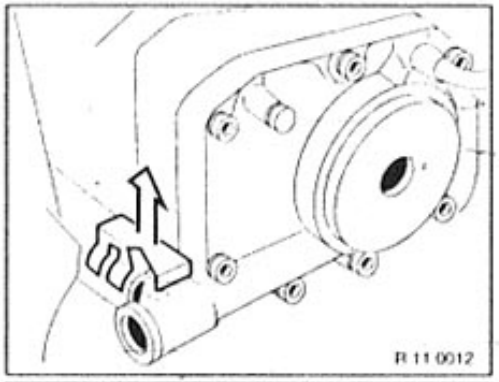

Remove clips and slide tube for engine venting forwards.

Installation:
Check seal and replace if necessary.

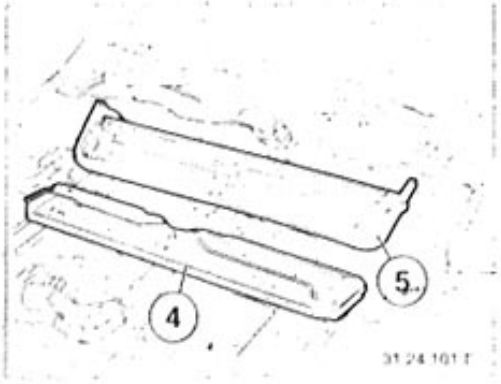

Lift out trim section (4) and microfilter (5).

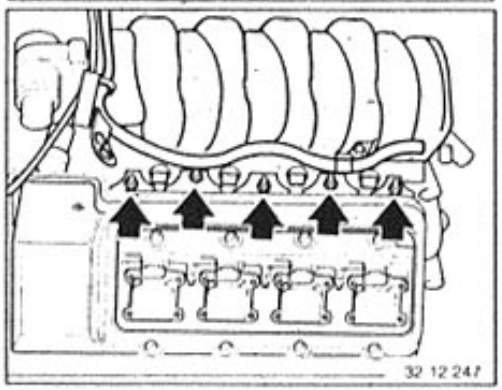

Loosen nuts.
Remove decoupling units, then remove intake air manifold by lifting upwards.

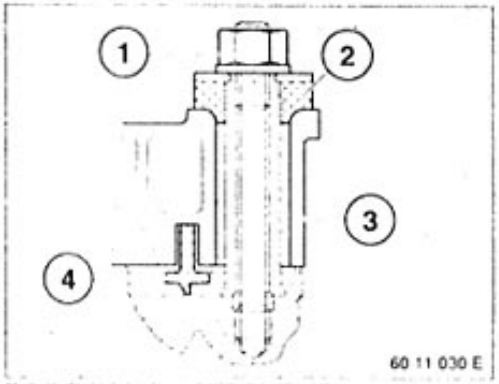

Note:
The intake air manifold is separated from the cylinder head by decoupling units and gaskets (vibration damping).
(1) Nut
(2) Decoupling unit
(3) Intake air manifold
(4) Gasket

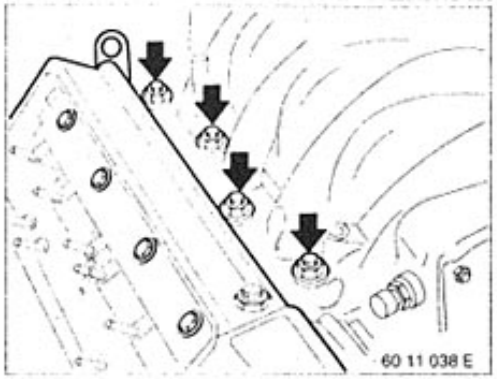

Installation:
Fit two decoupling units on left and right with nut - not under preload - and align the intake air manifold.
Fit all the other decoupling units with nut and tighten crosswise, radiating outwards from the center.
Tightening torque 11 61 1AZ*

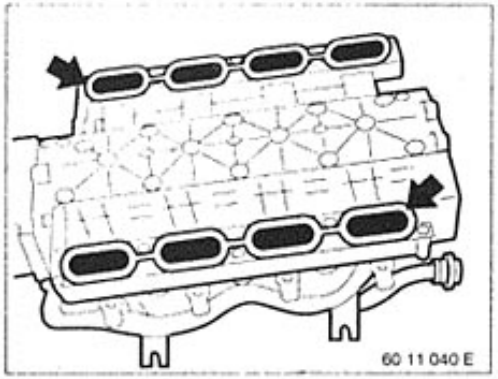

Installation:
Check gaskets and replace if necessary.
Ensure that the gaskets are correctly seated.

*** Refer to Technical Data**

11 62 142 Removing and installing or replacing both left exhaust manifolds

M60

Remove complete exhaust unit, see 18 00 020.

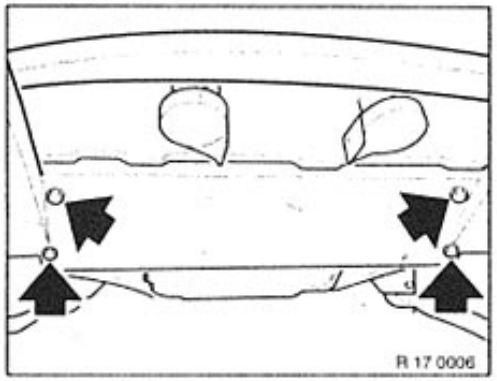

Remove underbody protection from engine.

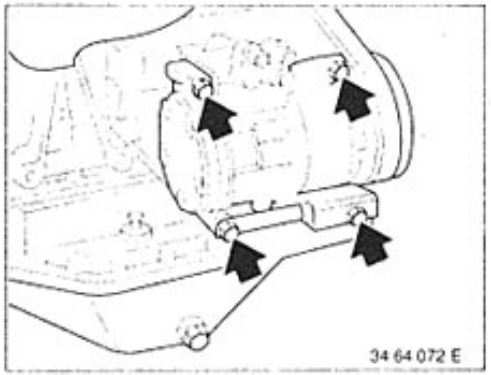

Remove drive belt from air conditioning compressor, see 64 52 020.

Unfasten air conditioning compressor from mount, see 64 52 020.

Note:
Lines remain connected.

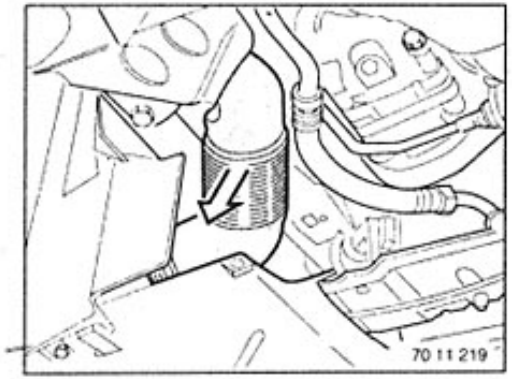

Remove cooling air guide for 3-phase alternator.

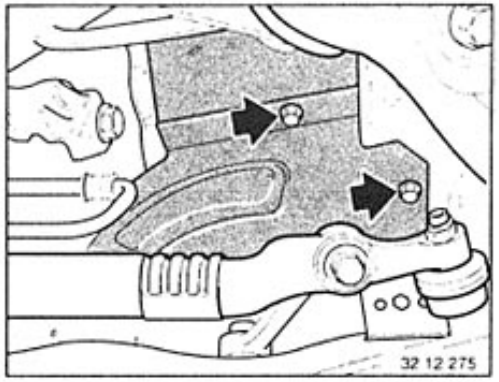

Remove left and right heat baffle plates from front axle carrier.

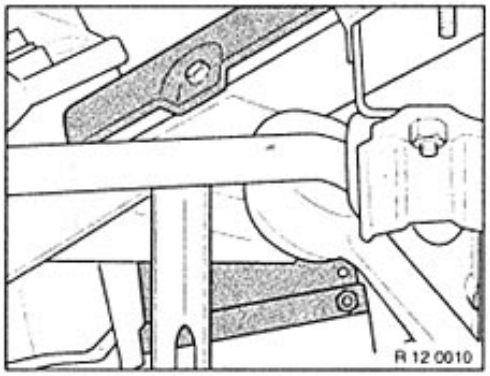

Remove left and right heat baffle plates.

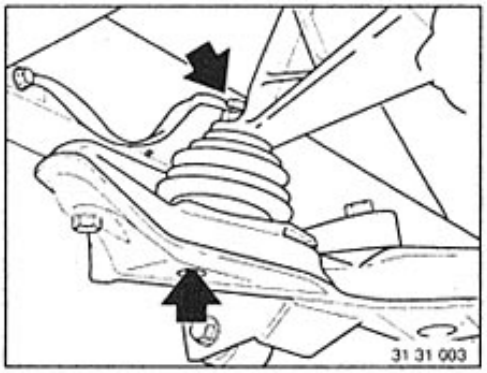

Unfasten left and right engine mount.
Remove ground tape from engine support arm.

Installation:
Tightening torque 11 81 1AZ*

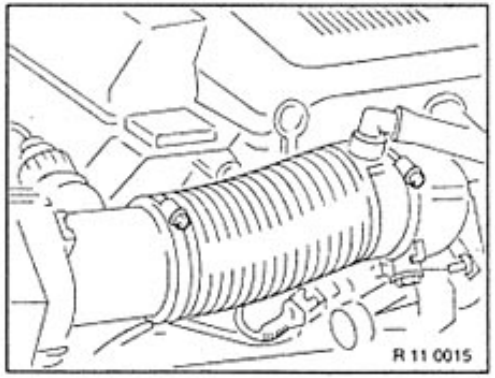

Remove hose to idle speed actuator and remove gaiter between throttle body and mass air flow sensor.

* Refer to Technical Data

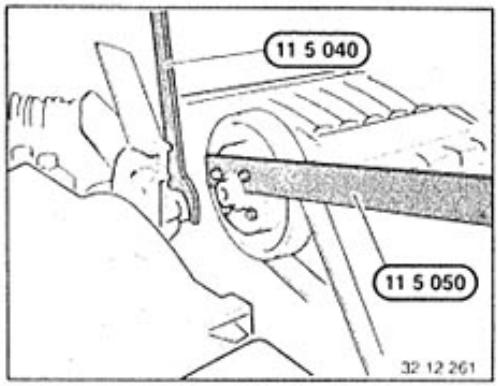

Remove fan wheel.
Use special tool 11 5 040 and 11 5 050.

Caution!
Counterclockwise thread

Installation:
Tightening torque 11 52 1AZ*

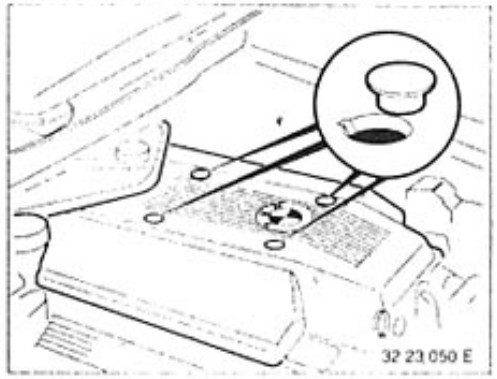

Lever clips out of manifold cover.
Unfasten screws.
Remove cover and acoustic insulation.

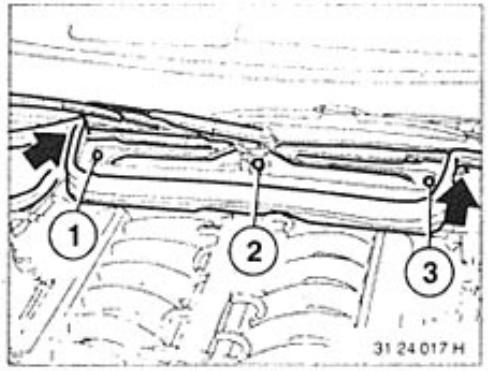

Partially remove rubber seal from air manifold.
Twist retainers (1 ... 3).
Unscrew and remove left and right screws.

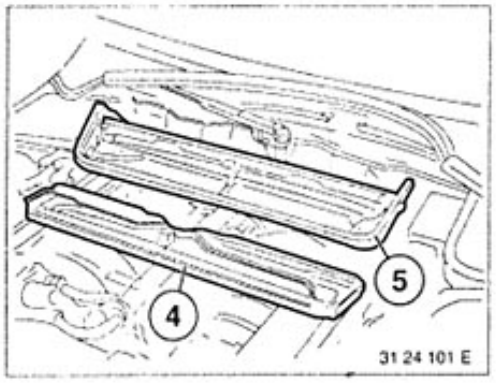

Lift out trim section (4) and microfilter (5).

* Refer to Technical Data

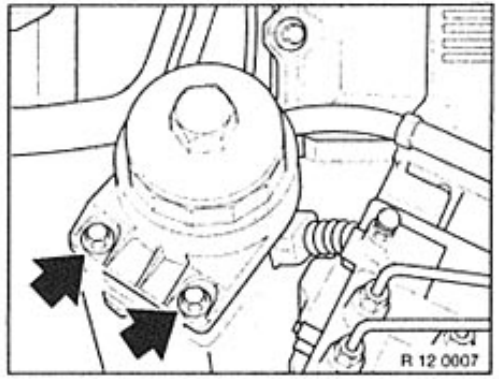

Disconnect full-flow oil filter.

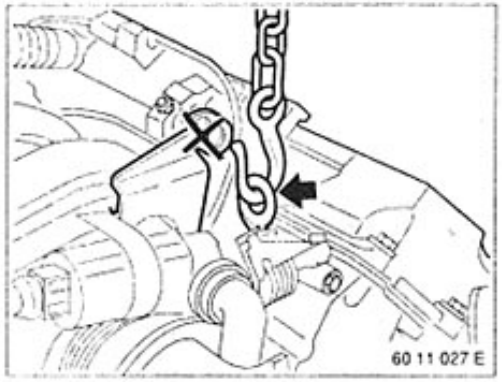

Raise engine at front with special tool 00 0 200.

Caution!
Note distance between engine and splash guard.

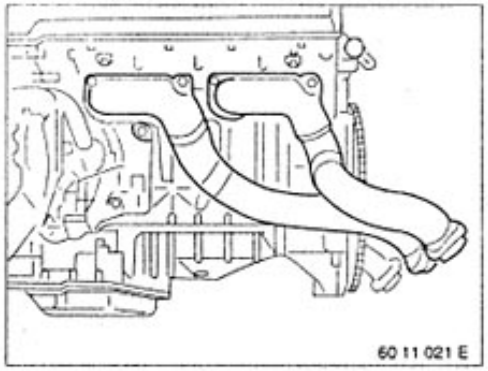

Completely unfasten screw connections on both exhaust manifolds.
Remove both exhaust manifolds from below.

Note:
Unfasten screw connection on exhaust manifold for cylinders 7/8 from below.

Installation:
Tightening torque 11 62 1AZ*

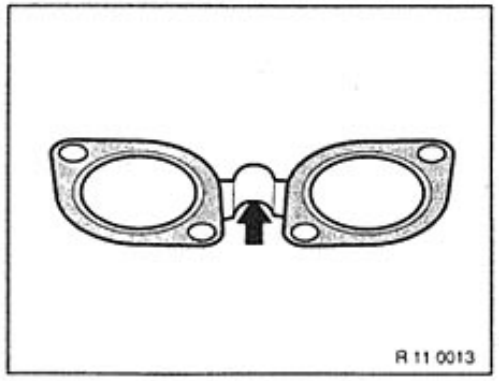

Installation:
Replace gaskets.
Sealing bead faces the exhaust manifold.

* Refer to Technical Data

11 62 143 Removing, installing or replacing both exhaust manifolds

M60

Remove complete exhaust system, see 18 00 020.

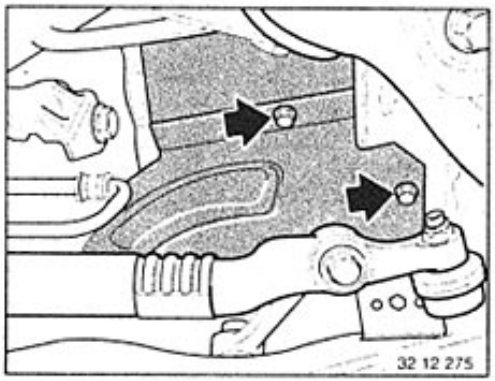

Remove left and right heat baffle plates from front axle carrier.

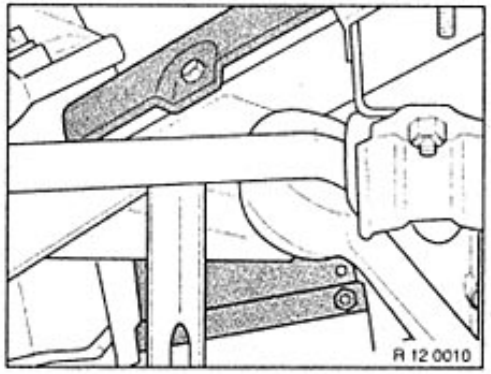

Remove left and right heat baffle plates from rear.

Remove active carbon filter, see 16 12 010.

Remove both heat baffle plates from engine support.

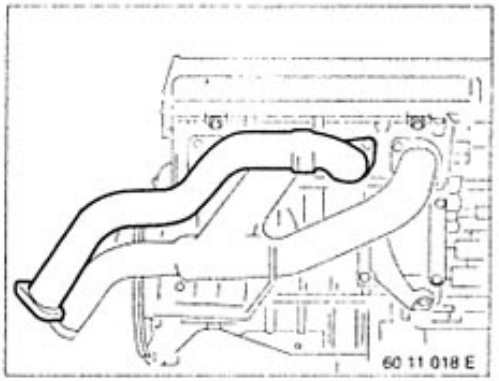

Completely unfasten screw connection on both exhaust manifolds.
Remove both exhaust manifolds by lifting upwards.

Note:
Unfasten screw connection on exhaust manifold for cylinders 2/4 from below.

Installation:
Tightening torque 11 62 1AZ*

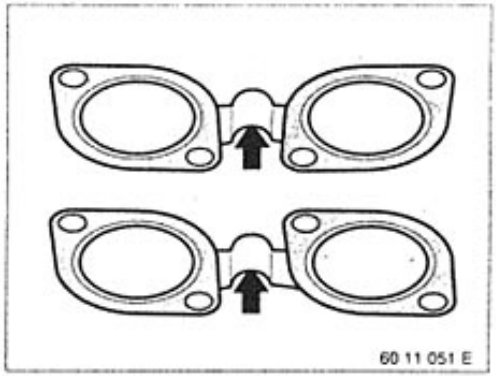

Installation:
Replace gaskets.
Sealing bead faces exhaust manifold.
Install gaskets from below.

* Refer to Technical Data

11 Engine M73

For additional work, refer to “Repair Instructions for 7 Series E38”

00 00 249 BMW engine oil service

M73

Refer to 00 00 249
Repair Instructions for 7 Series E38

11 00 039 Checking compression of all cylinders

M73

Caution!
High voltage – danger of death!
Interrupt power supply to ignition coils.
Note instructions on compression testing,
refer to General Data MG12
Repair Instructions for 7 Series E38

Disconnect fuel pump relay and DME master relay (installation: electronics box),
refer to Electrical Troubleshooting Manual (Schematics) for 8 Series E31
Directory of components 7000.0

After the test, interrogate fault memory and, if necessary, rectify faults. Cancel fault memory.
Subsequent procedure,
refer to 11 00 039
Repair Instructions for 7 Series E38

11 00 050 Removing and installing engine

M73

Note instructions on disconnecting and connecting battery, refer to General Data MG 12: removing battery ground wire.

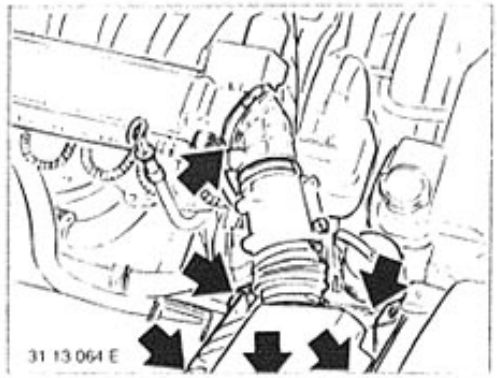

Remove upper section of intake filter housing with left and right mass air flow sensors.

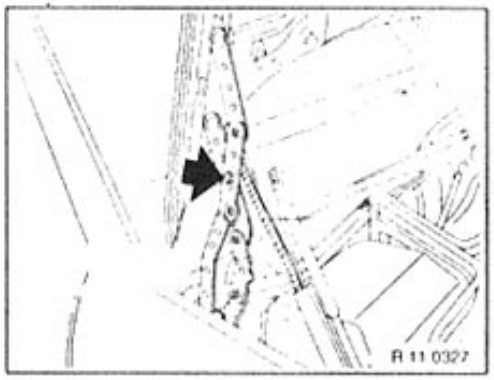

Move engine hood into assembly position. Disconnect damper strut from engine hood, fully open the engine hood and secure with a screw on left and right sides.

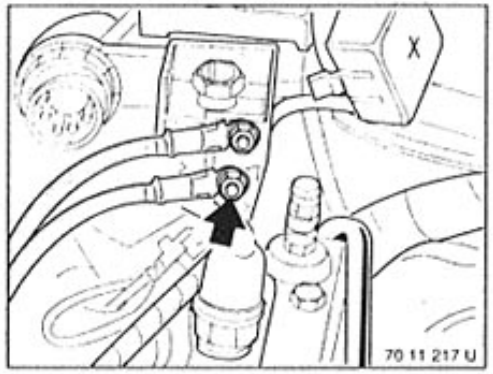

Disconnect positive battery lead from positive battery terminal.

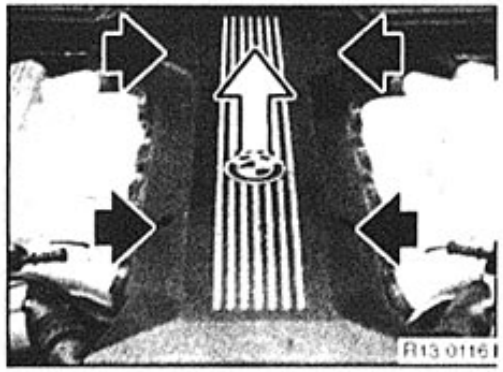

Rotate interlock through 90°. Remove cover.

Remove section of engine wiring harness from engine and place to one side,
refer to 61 11 051

Disconnect plug connection and remove hoses from tank vent valve,
refer to 13 90 500

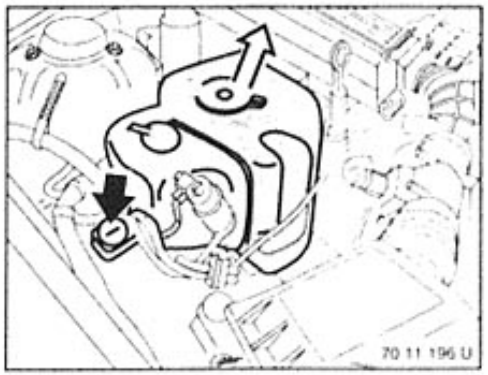

Remove windshield wash container and place to one side.

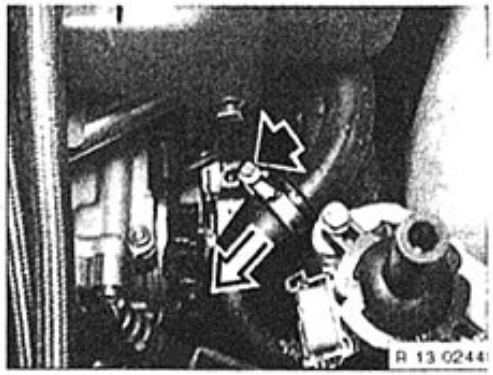

Unfasten hose clip from pressure pipe on air pump. Remove hose.

Remove complete full flow oil filter,
refer to 11 42 020
Repair Instructions for 7 Series E38

Completely remove radiator,
refer to 17 11 000

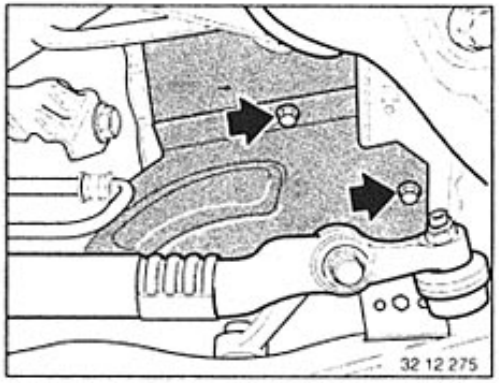

Remove left and right heat baffle plates from front axle carrier.

Remove exhaust pipes from cylinder bank 1 to 6,
refer to 18 31 010
Repair Instructions for 7 Series E38

Remove exhaust pipes from cylinder bank 7 to 12,
refer to 18 31 015
Repair Instructions for 7 Series E38

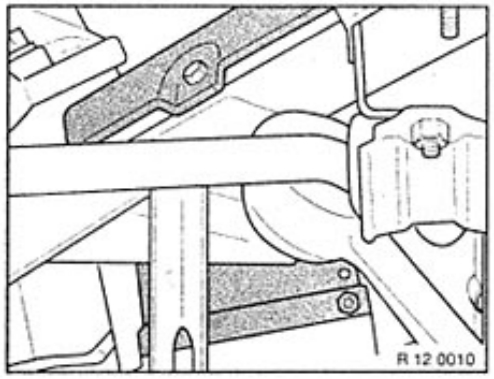

Remove left and right rear heat baffle plates.

Starter motor remove,
refer to 12 41 020

"Removing automatic transmission,"
refer to 24 00 026

Unfasten drain plugs for coolant from left and right sides of engine block.
Drain coolant and dispose of it correctly.

Installation:
Replace sealing rings.
Tightening torque,
refer to Technical Data 11 11 5AZ

Remove alternator drive belt,
refer to 11 28 010
Repair Instructions for 7 Series E38

Remove drive belt for compressor on air conditioner,
refer to 11 28 550
Repair Instructions for 7 Series E38

Remove dipstick tube,
refer to 11 43 000
Repair Instructions for 7 Series E38

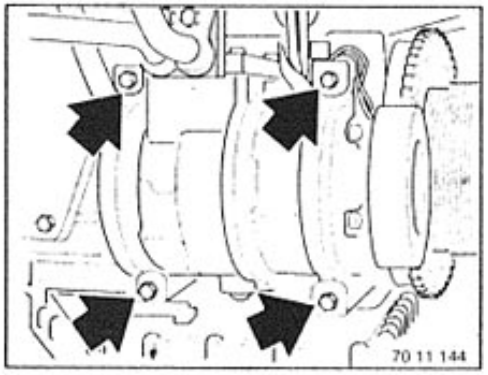

Unfasten air conditioning compressor from mount and tie to one side.

Note:
Lines remain connected.

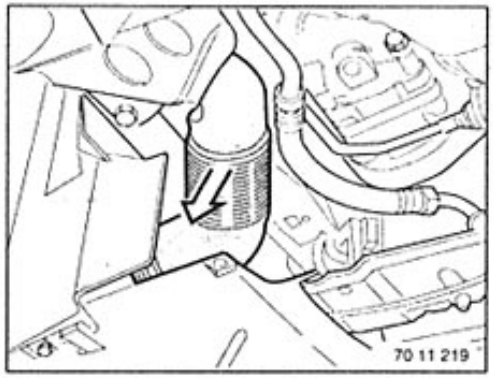

Remove cooling air guide for 3-phase alternator.

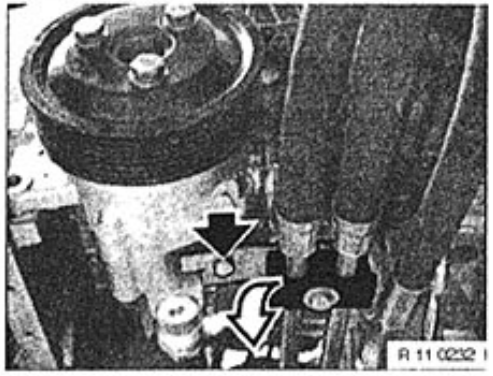

Remove bracket for hydraulic lines from vane pump.

Unfasten hydraulic line from front oil pan.

Remove vane pump,
refer to 32 41 060

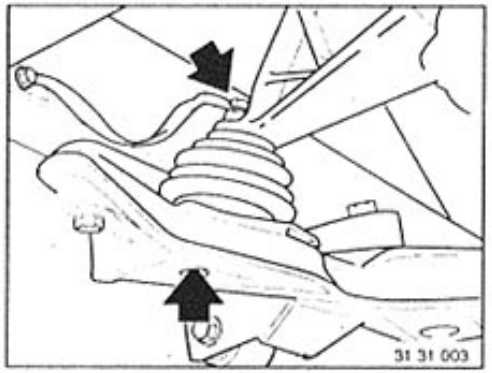

Unfasten ground strap from right engine support arm.

Unfasten both engine mounts on front axle support and on engine support arm.

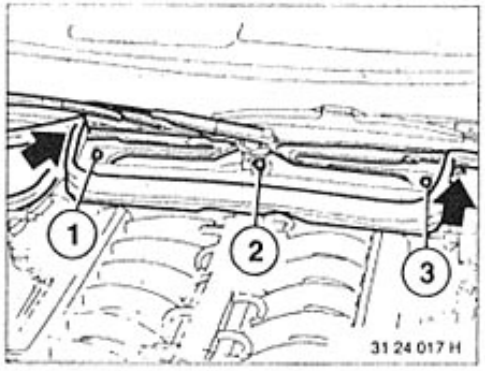

Partially remove rubber seal.
Twist retainers (1 to 3) through 90°.
Unfasten left and right screws.
Loosen top nut in centre.

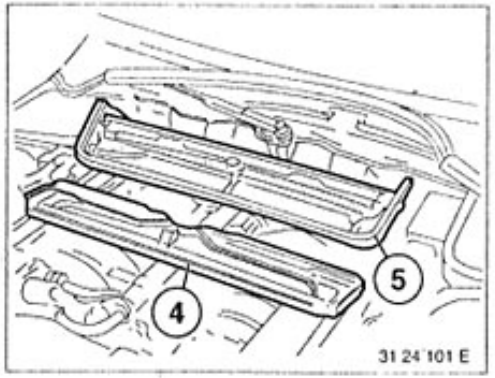

Lift off cover (4) and air manifold box (5).

Caution!
Catch fuel as it flows out and dispose of it correctly.
Remove fuel inlet and outlet lines.
This operation is described in section on replacing all injection valves,
refer to 13 64 541

Installation:
Replace fuel hoses.

Caution!
Lift engine and turn back to the right.
Note narrow gap between exhaust manifold and steering spindle.
Lift out engine carefully.

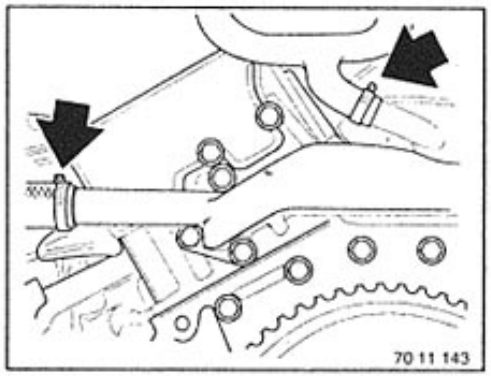

Remove coolant hoses from coolant manifold, coolant pipe and heater.

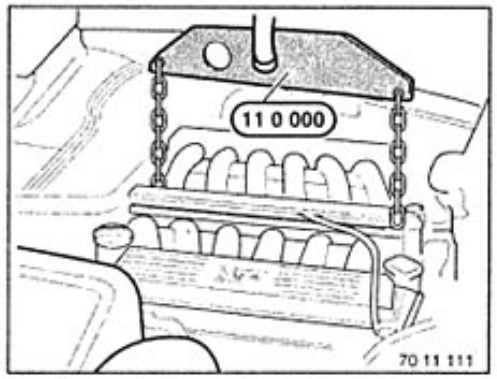

Secure engine on special tool 11 0 000.

Caution!
Only lift engine using the mounting lugs provided for this purpose.

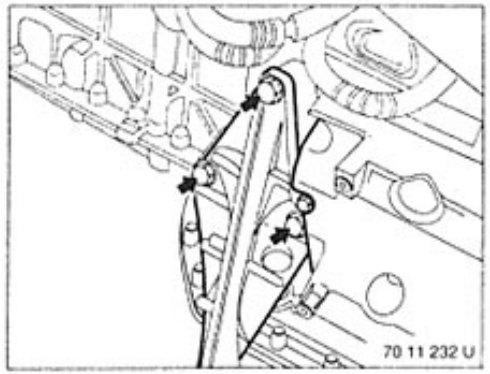

Raise engine slightly and remove right engine support arm.

11 12 004 Removing and installing / sealing both cylinder head covers

M73

Refer to 11 12 004
Repair Instructions for 7 Series E38

11 12 005 Removing and installing / sealing left cylinder head cover

M73

This operation is described in section removing and installing / sealing both cylinder head covers,
refer to 11 12 004
Repair Instructions for 7 Series E38

11 12 006 Removing and installing / sealing right cylinder head cover

M73

This operation is described in section on removing and installing / sealing both cylinder head covers,
refer to 11 12 004
Repair Instructions for 7 Series E38

11 12 105 Removing and installing left cylinder head

M73

Remove engine,
refer to 11 00 050

Subsequent procedure,
refer to 11 12 105
Repair Instructions for 7 Series E38

11 12 106 Removing and installing right cylinder head

M73

Remove engine,
refer to 11 00 050

Subsequent procedure,
refer to 11 12 106
Repair Instructions for 7 Series E38

11 13 010 Removing and installing / replacing upper section of oil pan

M73

Remove fan coupling with fan wheel, refer to 11 52 020 Repair Instructions for 7 Series E38

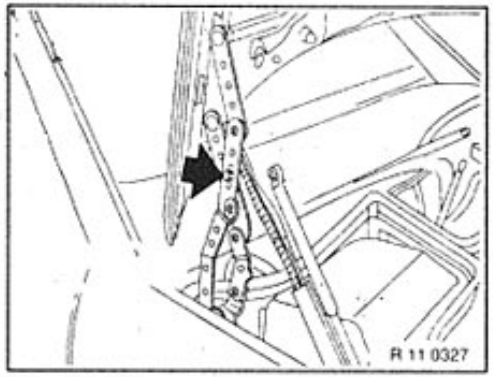

Lift engine hood into assembly position.

Disconnect damper strut on engine hood, open engine hood fully and secure with one screw on left and right sides.

Remove alternator drive belt, refer to 11 28 010 Repair Instructions for 7 Series E38

Relieve tension on drive belt for air conditioner compressor and remove adjustment plate from oil pan, refer to 11 28 550 Repair Instructions for 7 Series E38

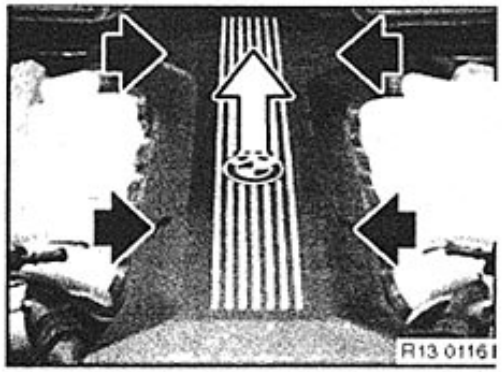

Twist interlock through 90°. Remove cover.

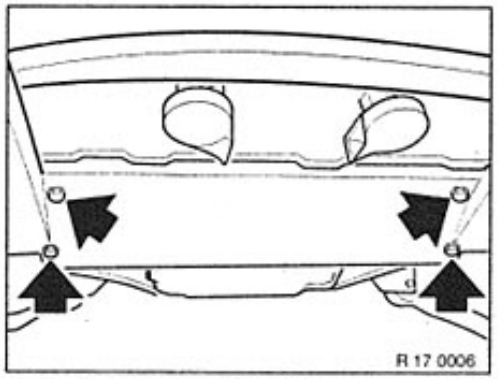

Remove front underbody protection.

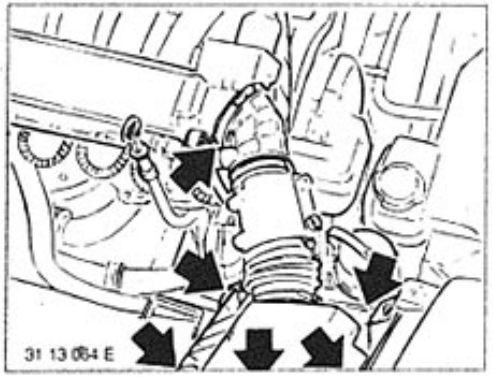

Remove upper section of intake filter housing with left and right mass air flow sensors.

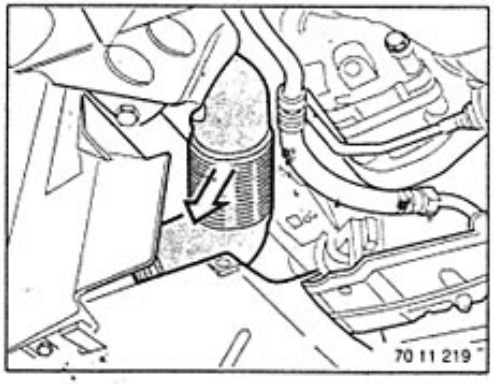

Remove coolant guide on alternator.

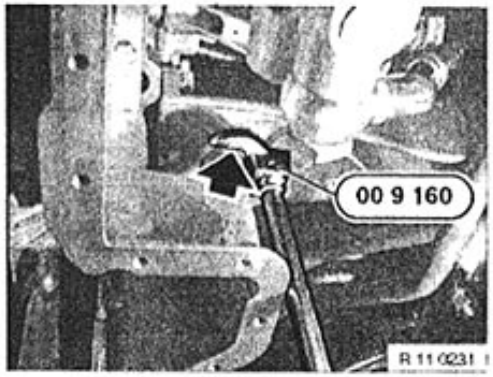

Unfasten return line of main flow fuel filter on oil pan with special tool.

Installation:
Replace sealing ring.
Tightening torque,
refer to Technical Data 11 42 5AZ

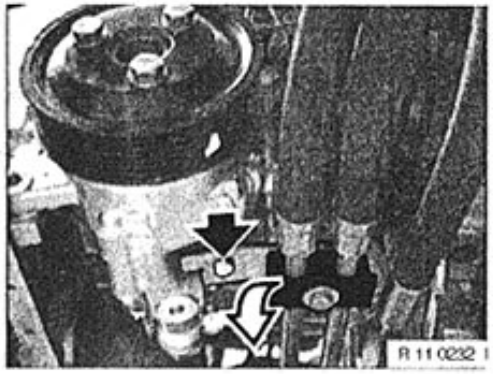

Remove bracket for hydraulic lines from vane pump.

Unfasten hydraulic line from front oil pan.

Remove vane pump,
refer to 32 41 060

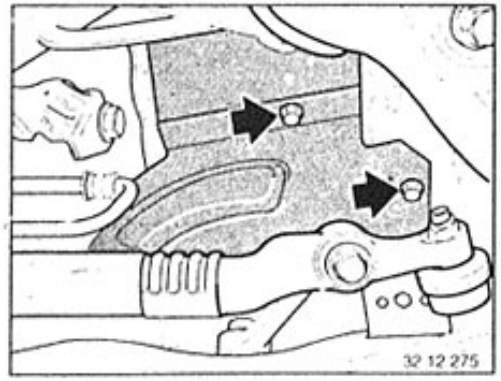

Remove left and right heat baffle plates from front axle carrier.

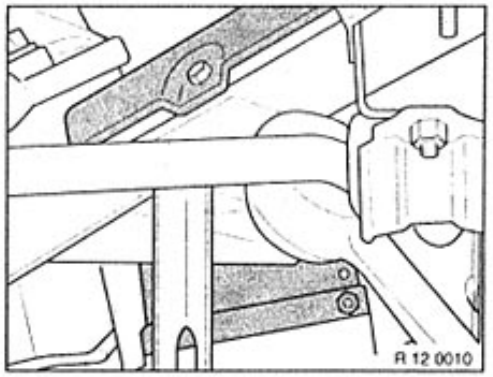

Remove left and right rear heat baffle plates.

Unfasten left and right exhaust pipes from exhaust system,
refer to 18 31 010 / 015
Repair Instructions for 7 Series E38

Remove lower section of oil pan,
refer to 11 13 020
Repair Instructions for 7 Series E38

Remove dipstick tube,
refer to 11 43 000
Repair Instructions for 7 Series E38

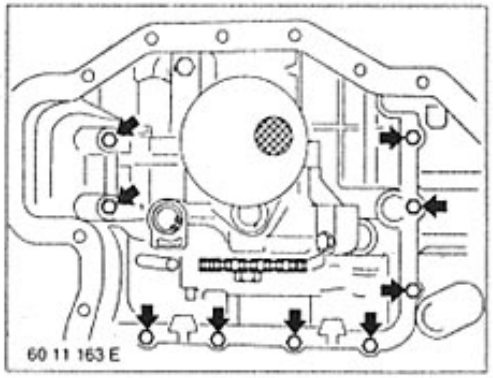

Unfasten screws inside oil pan.

Remove oil pump,
refer to 11 41 000
Repair Instructions for 7 Series E38

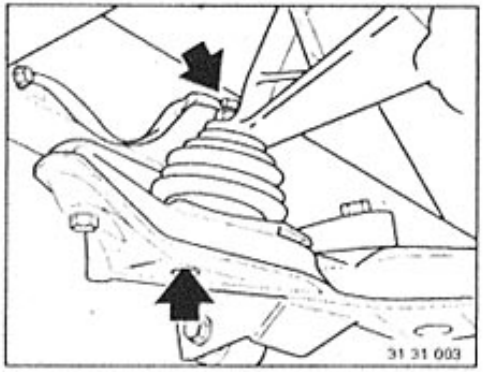

Unfasten left and right lower engine mounts.

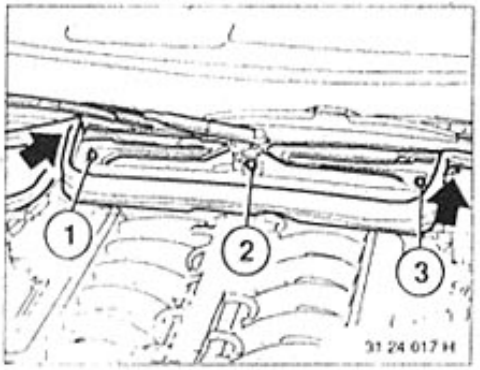

Partially remove rubber seal.
Twist retainers (1 to 3) through 90°.
Unfasten screws on left and right sides.
Loosen top nut in centre.

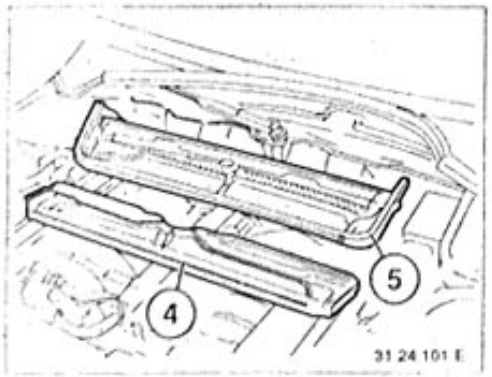

Lift out cover (4) and air manifold box (5).

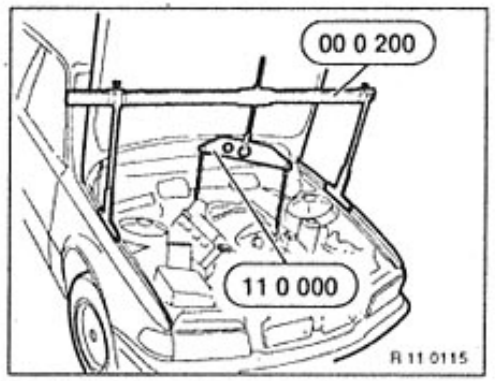

Assemble special tool 00 0 200 with special tool 00 0 2001 / 202 / 204 / 206 and attach.

Note:
Supports must be located on screws in both side panels.
Secure special tool 11 0 000 to special tool 00 0 200.

Caution!
Only attach engine on locating lugs provided.

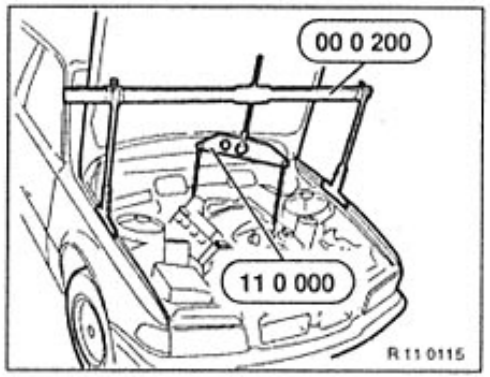

Lift engine with special tool 00 0 200 approx. 40 mm.

Caution!
Note gap between engine, heating connections and end wall.

To obtain more clearance between oil pan and track rod, move steering over to right lock.

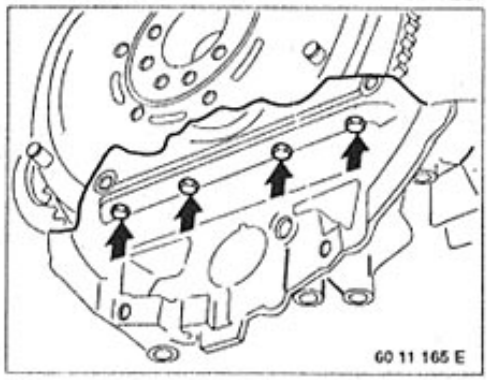

Unfasten screws on end cover.

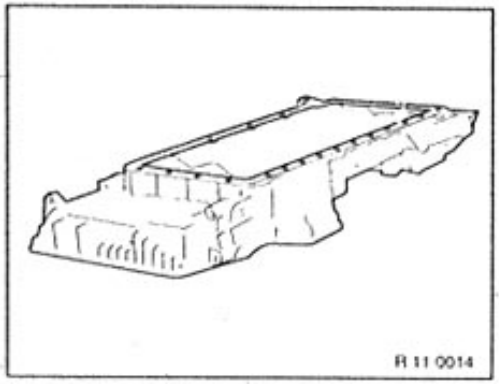

Unfasten remaining screws in oil pan.
Pull upper section of oil pan forwards to remove.

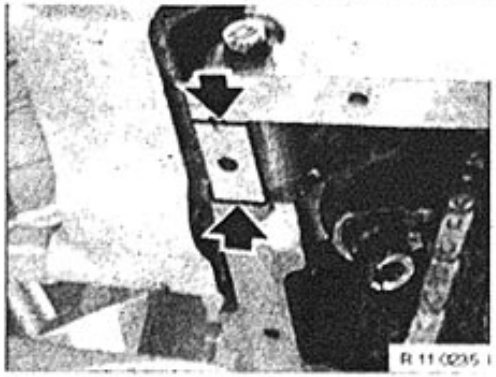

Installation:
Clear gasket debris off left and right sealing faces and clean them.
Coat contact edges of separating plane with liquid sealing compound Hylomar SQ 32 M, refer to BMW Parts Service.

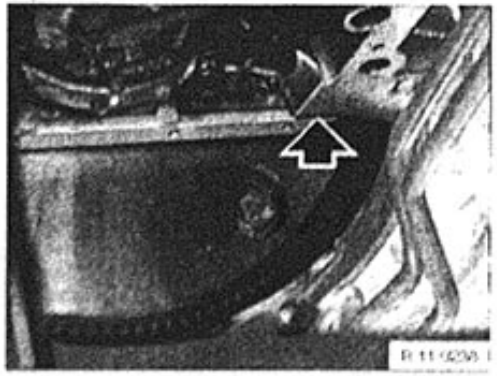

Installation:
Clean gasket debris off sealing faces on left and right end covers.
Coat contact edges of separating plane with liquid sealing compound Hylomar SQ 32 M, refer to BMW Parts Service.

Replace gasket.

Installation:
Install all screws in oil pan.
Fit screws on transmission end without pre-load.
Tighten screws on engine end.
Tighten screws on transmission end.

11 53 325 Removing and installing / replacing coolant manifold

M73

Remove engine,
refer to 11 00 050

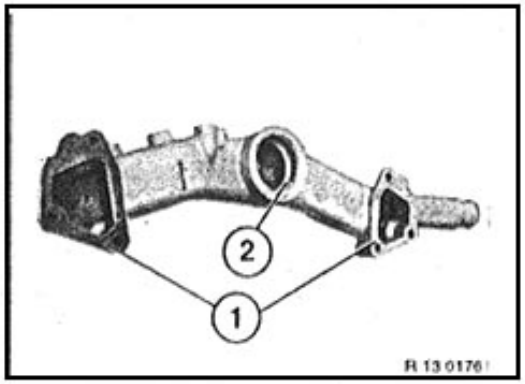

Installation:
Clean sealing faces (1) on back of cylinder heads and on coolant manifold.
Replace gaskets.
Replace O-ring (2).

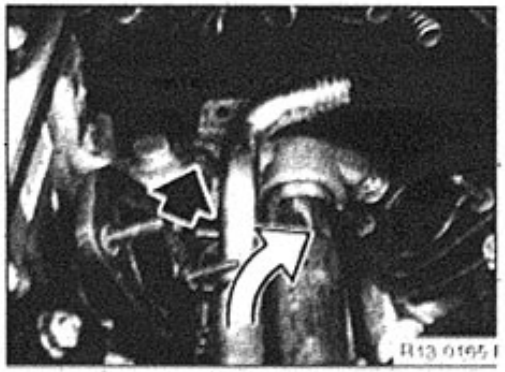

Unfasten hose clips and remove coolant hoses.
Unfasten screw.

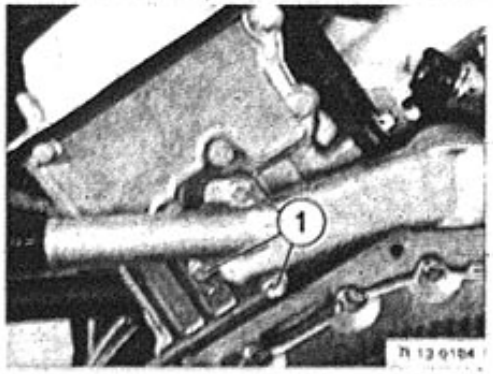

Cylinder head on cylinder bank 7-12:
Unfasten screws (1).

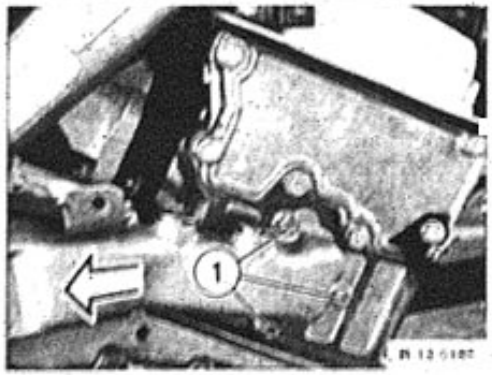

Cylinder head on cylinder bank 1- 6:
Unfasten screws (1)
Remove coolant manifold.

11 62 142 Removing and installing / replacing both left exhaust manifolds

M73

Remove exhaust pipes,
refer to 18 31 010
Repair Instructions for 7 Series E38

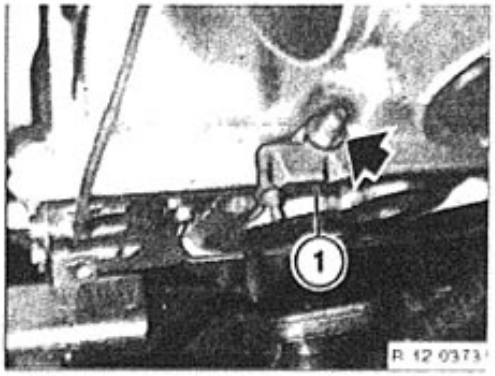

Remove bracket (1) for distributor caps cover.

Remove non-return valve for cylinder bank 7 to 12,
refer to 11 72 054
Repair Instructions for 7 Series E38

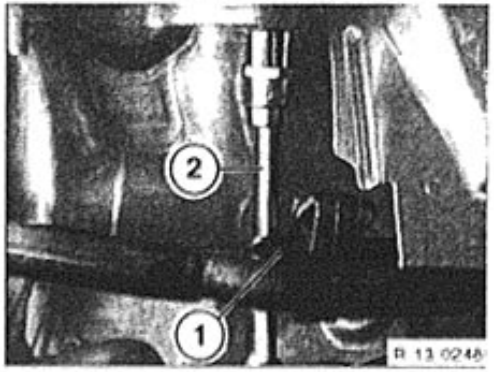

Baffle plate is secured with top nuts in exhaust manifold.

Note:
Insert tool (2) between exhaust manifold and pipe (1).

Remove left distributor cap (cylinder bank 7 to 12),
refer to 12 11 096
Repair Instructions for 7 Series E38

Note:
Do not remove ignition cable from distributor cap

Remove pipe for secondary air induction,
refer to 11 72 194
Repair Instructions for 7 Series E38

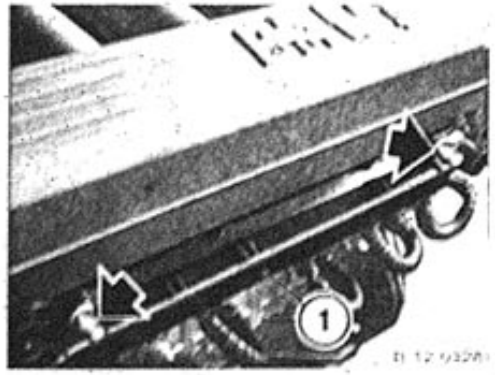

Unfasten screw connection from ignition wiring harness.
Remove spark plug connector.
Place ignition wiring harness (1) and distributor cap to one side.

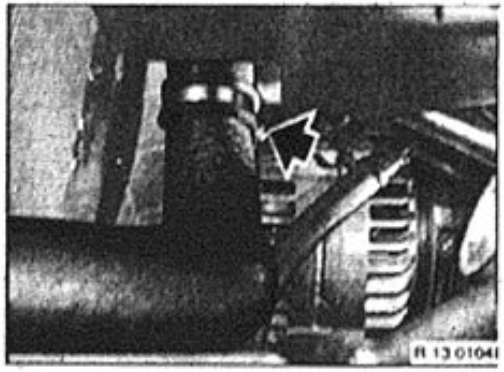

Unfasten bracket for cooling water hose.

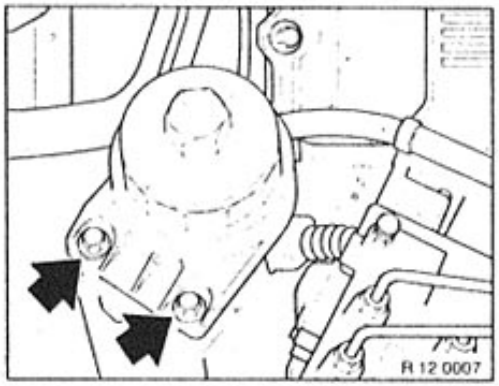

Unfasten full flow oil filter from bracket.

Note:
Lines remain connected.

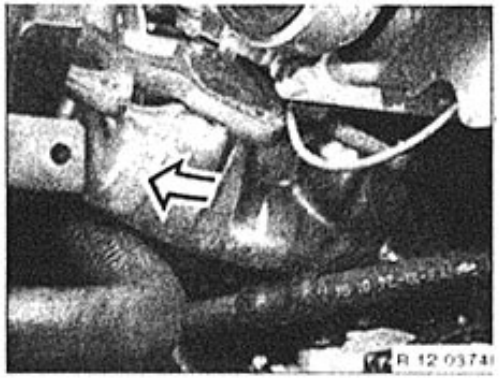

Unfasten exhaust manifold and pull forward to remove.

Subsequent procedure,
refer to 11 62 142
Repair Instructions for 7 Series E38

11 62 143 Removing and installing / replacing both right exhaust manifolds

M73

Refer to 11 62 143
Repair Instructions for 7 Series E38

11 72 000 Removing and installing / replacing air pump

M73

Remove right pop-up headlight, refer to 63 12 460

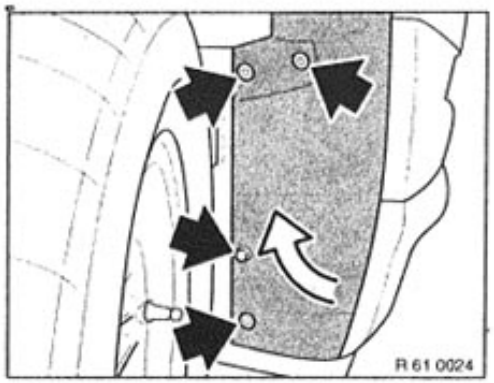

Partially remove internal wheel arch trim.

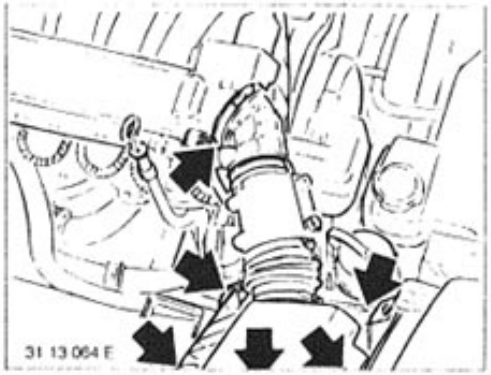

Remove upper right section of intake filter housing.

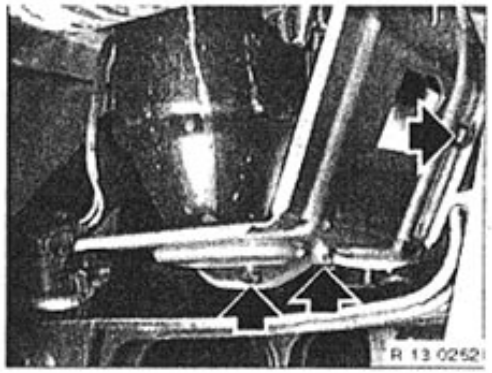

Remove right brake air duct.
Unfasten screws in bracket for air pump.

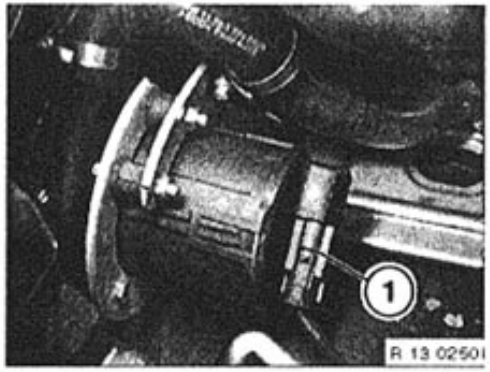

Unfasten plug connection (1).

Lift out air pump from top.

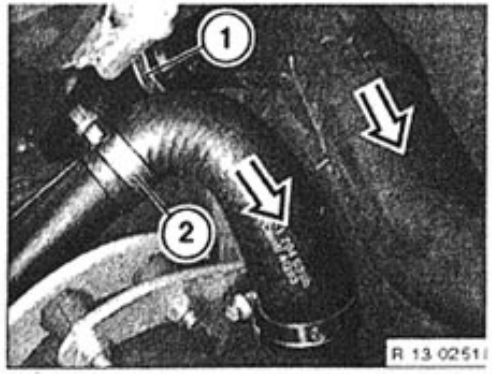

Unfasten hose clips (1 and 2).
Remove hoses.

12 Engine electrical system

For additional work, refer to "Repair Instructions for 7 Series E38"

33 34 545 Replacing filter in spring accumulator unit

Switch off ignition.
Remove spare wheel.
Remove cover of spring accumulator unit.

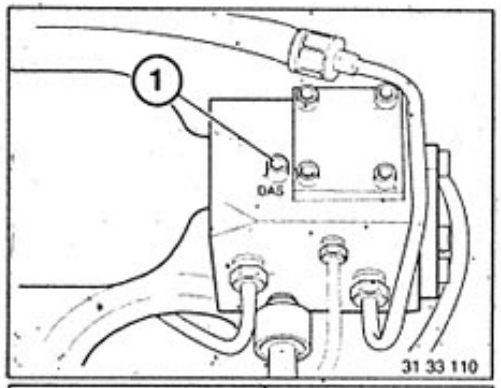

Loosen pressure relief screw (1) half a turn to relieve spring accumulator pressure.

Installation:
Tightening torque 33 34 1AZ*

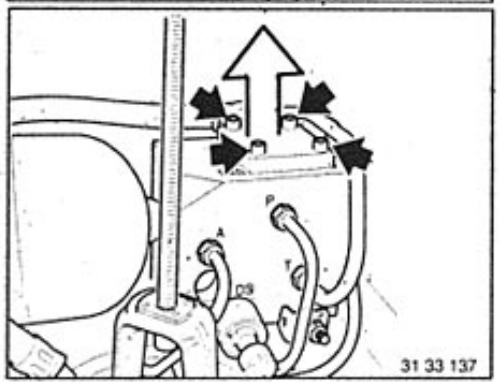

Unfasten screws and remove the filter cover.
Lift out filter element with special tool 11 3 251.

Installation:
Tightening torque 33 34 4AZ*

* Refer to Technical Data

33 34 547 Replacing filter in actuator unit

Switch off ignition.
Remove spare wheel.
Remove cover from spring accumulator unit.

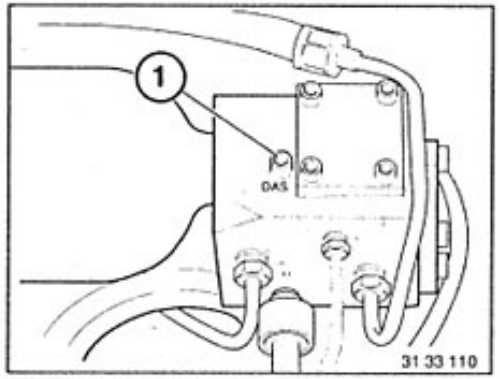

Loosen pressure relief screw (1) half a turn to relieve spring accumulator pressure.

Installation:
Tightening torque 33 34 1AZ*

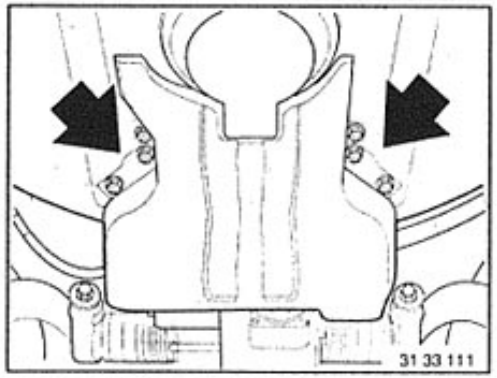

Unfasten nuts and remove protective plate.

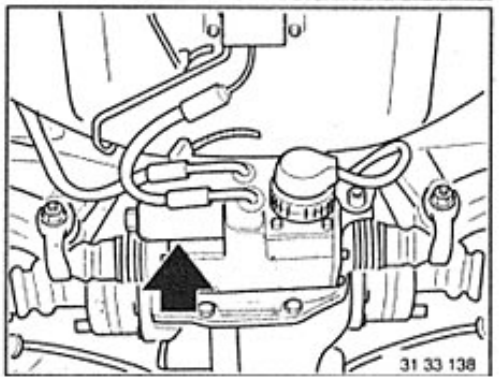

Unfasten filter bell housing and remove filter element.

Installation:
Tightening torque 33 34 7AZ*

* Refer to Technical Data

INSTRUCTIONS FOR WORKING ON IGNITION SYSTEM, DME (DIGITAL MOTOR ELECTRONICS) AND ENGINE ELECTRICAL EQUIPMENT

Caution!
Always switch off ignition before working on ignition system – dangerous high tension!

- Always remove DME master relay for the compression test to avoid activation of ignition coils by ignition final stages of the DME control unit. Dangerous high tenesion!
- Always switch off ignition before connecting / disconnecting Service Tester, other testers and adapters or replacing components!
- Secondary (high tension) side of ignition system must be loaded with at least 4 k-ohms.
- Never start engine after removing distributor cap or disconnecting wire (terminal 4) on ignition coil (terminal 4).
- Never connect a shielded capacitor or test lamp on ignition coil terminal 1.
- Never connect ignition coil terminal 1 wire to ground or B+.
  Consequently terminal 1 wire may not be used to interlock starting when service installing a burglar alarm system.

Direct Ignition System (Without Distributor):

- Engine must never be started after disconnection of the secondary circuit, i.e. disconnection of connectors on spark plugs and ground connection (terminal 4a).
- There is dangerous high tension in or on
  - ignition leads,
  - spark plug connectors,
  - spark plugs,
  - ignition coil terminal 4
    (*Caution!* approx. 40 kV high tension) and
  - terminal 1 wire from ignition coil to DME control unit
    (*Caution!* approx. 350 V high tension at terminal 1).
- Battery as well as wires on alternator and starter may not be disconnected on a running engine.

INSTRUCTIONS FOR REMOVING AND INSTALLING ELECTRONIC CONTROL UNITS

Caution!
Disconnecting the car's battery will cancel the fault memories of control units.
Consequently prior to disconnection of the car's battery fault memories should be interrogated and faults printed by the printer of a BMW Service Tester. Investigate stored faults.
Ignition must always be switched off before disconnecting or connecting control unit plugs.
Removal and installation of components, relays, fuses, etc. could cause the storage of faults in fault memories of control units capable of self-diagnosis. Consequently fault memories must always be interrogated after working on the electrical system. Stored faults must be investigated and cancelled.

Note When Replacing DME (Digital Motor Electronics) Control Unit:

Each control unit is programed with certain basic values, which serve as mean values.
The control unit receives different input values, depending on engine condition, which are compared with the stored values.
The adaptive system compares the input values with the stored map values. Appropriate correction commands are sent to the concerned drive elements.
If, for example, the DME control unit would be without current for a long time (more than an hour), its adaptive system would lose the stored values. After re-operation of a cancelled or installation of a new control unit the input values of a pertinent engine must be read in and stored for the adaptive system.This procedure could lead to erratic idling and disturbed overrunning of the engine after starting. Depending on the engine it could require some time before all values are adapted to the engine condition.

Consequently there must be conformance with the following procedures before replacing a DME control unit or operating a control unit which had been disconnected.

- Run engine to operating temperature.
- Install control unit and drive car.

CHECKING COMPONENTS

Note:
Refer to Construction Group Repair Manual.
Always conform with safety precautions and accident prevention regulations whenever carrying out tests or work on engine electric and electronic components.

Always disconnect plugs of control units or components before checking electric wires.

Testing Aids:
Concerned wiring diagrams and current flow diagrams can be found in the binders for "Car Electric/Electronic Test Plan – 8 Series E 31".

Only use appropriate test leads, adapter leads (refer to concerned repairing instructions), terminals and test clips.

Test values for checking components are contained in the Car Electric / Electronic Test Plan.
Also refer to the Technical Data microfiche for other specifications.

OUTSIDE STARTING AIR AND CAR TELEPHONE

Siemens C 2:
When starting the engine with help of the battery in a different vehicle ensure that the Siemens C 2 telephone is not damaged through overvoltage. Disconnect the sender and receiver from the electrical system prior to starting the engine with outside help.

Siemens C 3 and Motorola C 451:
Senders and receivers of Siemens C 3 and Motorola C 451 car telephones have overvoltage protection, but calls may not be made while starting the engine with outside help.

Always refer to the pertinent operating instructions of other type and other make car telephones. If in doubt, disconnect the sender/receiver from the electrical system.

SYNCHRONIZATION OF BANKS OF M 70 ENGINE CYLINDERS

The following information is important when replacing one or both DME control units.

Each electronic control unit is programmed with certain basic values, which are only mean values.
A control unit, however, receives variable input values depending on the vehicle operating conditions, which are permanently compared with the stored values. The adaptive system first compares them, then determines corrective values required for a pertinent operating condition and finally forwards the latter values to the concerned components such as air volume meters, throttle valve assemblies, Motronic control units and so on.
If, for example, the Motronic control unit were without current for a long period of time (more than 1 hour), its adaptive system would lose the stored values.
The adaptive system would have to find a balanced level between the programmed values and engine-orientated operating condition values after restoring operation of an erased control unit or installing a new control unit.

Consequently there must be conformance with the following procedures before an EML or DME control unit is replaced or after restoring operation of a disconnected control unit.

- Run engine to operating temperature.
- Install new control unit and drive car, whereby the car must coast three times from speeds above 5,000 rpm to the idling range in transmission range 1 (approx. 10 seconds).
- Have engine run at idling speed in transmission range P or N at least 5 minutes.

These procedures serve immediate and precise synchronization of both banks of cylinders in all operating conditions.

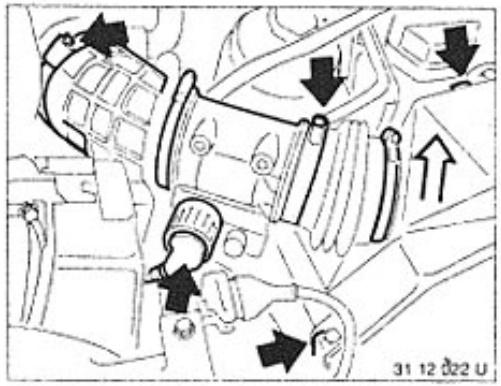

12 11 094 REPLACING BOTH DISTRIBUTOR CAPS

Remove upper air cleaner section complete with air mass sensor.

Note:
Firing order of M 70 engine is 1-7-5-11-3-9-6-12-2-8-4-10.

Numbers of ignition leads for bank of cylinders 7 ... 12 is equal to bank of cylinders 1 ... 6, i.e.
cylinder 7 = ignition lead 1,
cylinder 8 = ignition lead 2
and so on.

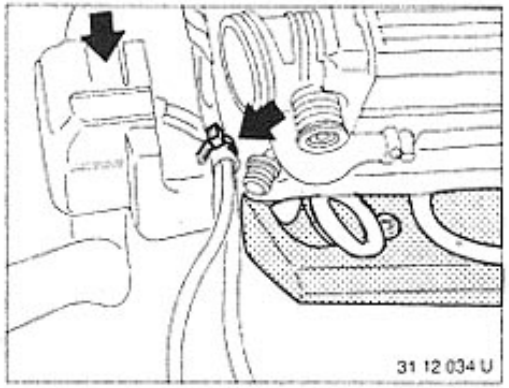

Loosen wire strap.
Take off cover.

Installation:
Engage cover in holder.

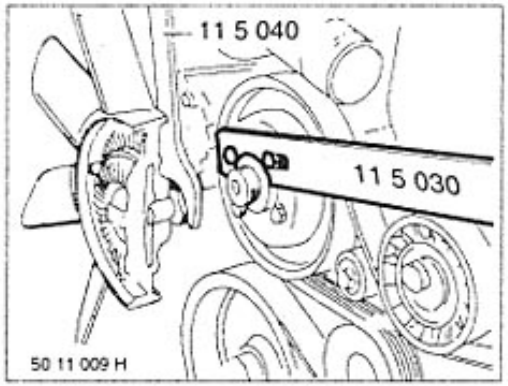

Unscrew fan – left-hand threads!
Use Special Tools 11 5 030 / 040.

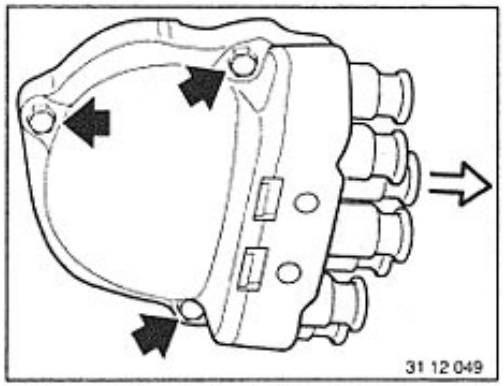

Pull off shielded connector.

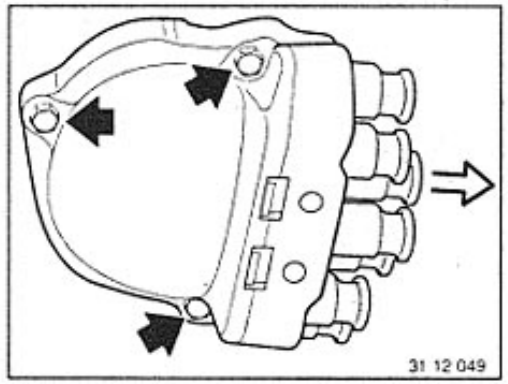

Unscrew screws and take off distributor cap.

Caution!
Danger of cutting hands on radiator fins.

Installation:
Numbers on leads and cap (for example 5) must be the same.

ZS = ignition coil

Installation:
Check seal, replacing if necessary.

12 11 096 Replacing left distributor cap (M73)

Refer to
Repair Instructions for 7 Series E38.

12 11 098 Replacing right distributor cap (M73)

Refer to
Repair Instructions for 7 Series E38.

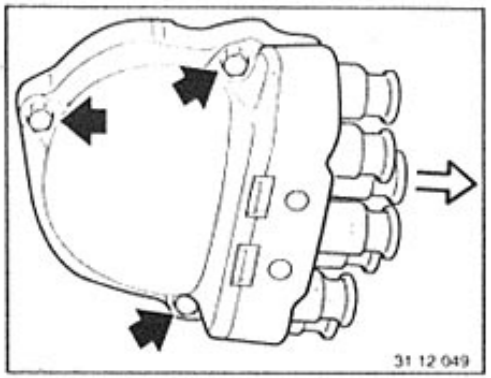

12 11 114 Replacing both distributor rotors

Remove distributor cap – refer to 12 11 096 or 12 11 098,
Repair Instructions for 7 Series E38.

If necessary, remove screenwash container.
Caution!
Risk of injury on radiator fins.

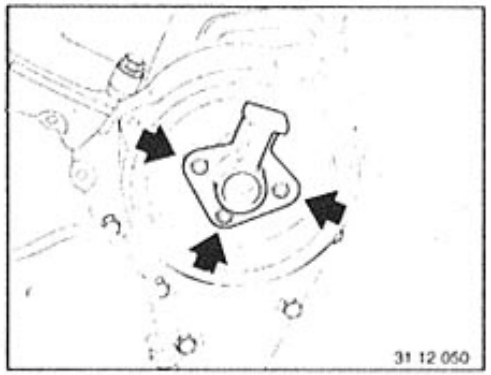

Unfasten screws with socket head cap wrench.

Installation:
Tightening torque,
refer to Technical Data 12 11 2AZ .

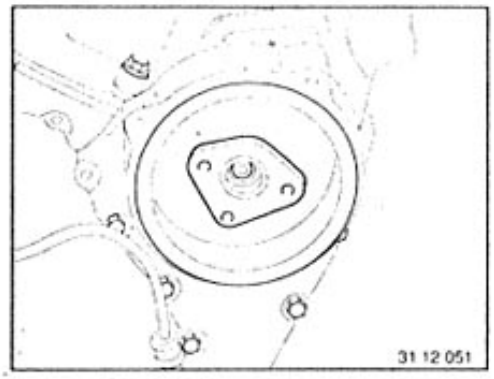

Note:
Measure resistance* and check surface and casting compound for hairline cracks and burn marks.
If unit is affected by these faults, always search for the cause of the fault and replace the relevant component.

12 11 206 Checking distributor cap, ignition leads and ignition line connector on left side

Refer to
Repair Instructions for 7 Series E38.

12 11 208 Checking distributor cap, ignition leads and ignition line connector on right side

Refer to
Repair Instructions for 7 Series E38.

* Refer to Technical Data

12 12 011 Replacing spark plugs (M 70, S 70)

M 70
Remove windshield wash container.
Remove spark plug connector.
Unscrew and remove spark plug with special tool 12 1 170

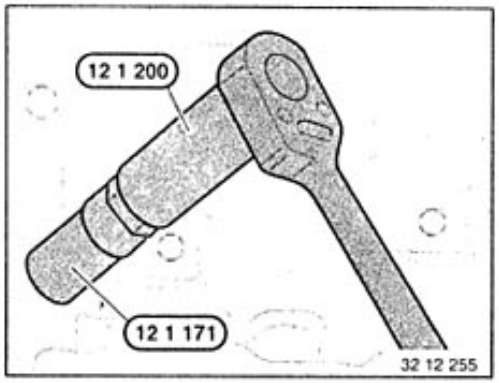

Installation:
Tighten with special tool 12 1 171 and torque limiter 12 1 200.
Complete tool 12 1 170.
Without tool 12 1 200, note tightening torque.
Tightening torque 12 12 1AZ*

* Refer to Technical Data

12 12 011 Replacing spark plugs (M 60)

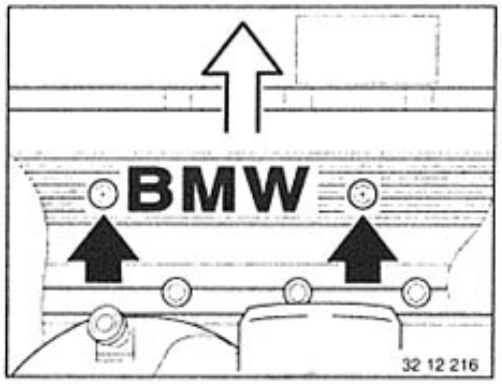

Unclip cover over screws.
Unfasten screws.
Remove cover.

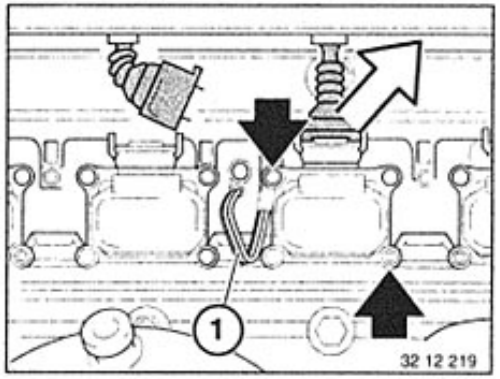

Unfasten screws.
Remove ignition coil.

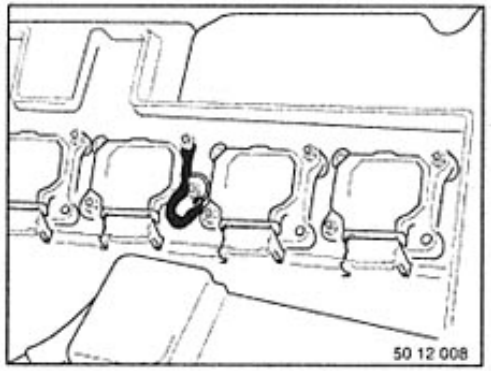

Installation:
With the ignition coils on cylinders 3 and 6, the ground tapes on the cylinder head cover must be secured to the ignition coils.

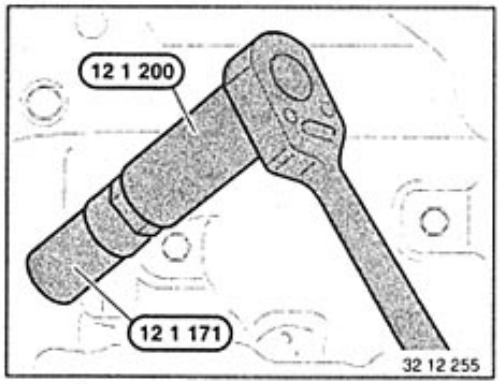

Unscrew and remove spark plugs with special tool 12 1 171.

Installation:
Tighten using special tool 12 1 171 and torque limiter 12 1 200.
Complete tool 12 1 170.
Without tool 12 1 200, note tightening torque.
Tightening torque 12 12 1AZ*

* Refer to Technical Data

12 12 011 Replacing all spark plugs (M73)

Switch off ignition.
Disconnect spark plug connector.

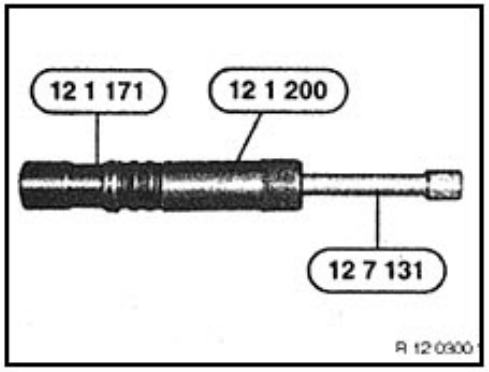

Cylinders 1-8:
Use special tools 12 7 131 and 12 1 171.

Installation:
Tighten down spark plug with special tool 12 1 171 and special tool 12 7 131 (extension) and special tool 12 1 200 (torque limiter). If not using special tool 12 1 200, note tightening torque.

Tightening torque,
refer to Technical Data 12 12 1AZ

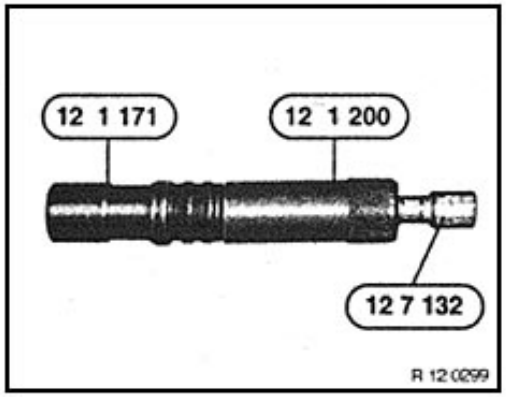

Cylinder 9-12:
Use special tools 12 7 132 and 12 1 171.

Installation:
Tighten down spark plug with special tool 12 1 171 and special tool 12 7 132 (extension) and special tool 12 1 200 (torque limiter). If not using special tool 12 1 200, note tightening torque.

Tightening torque,
refer to Technical Data 12 12 1AZ

12 12 036 Replacing all ignition leads on left side (M73)

Switch off ignition.

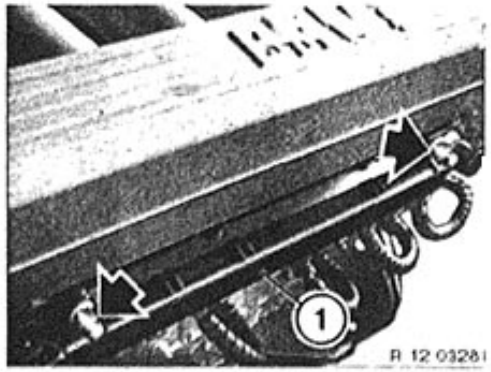

Unfasten screw connection of ignition wiring harness on manifold.

Disconnect spark plug connector.

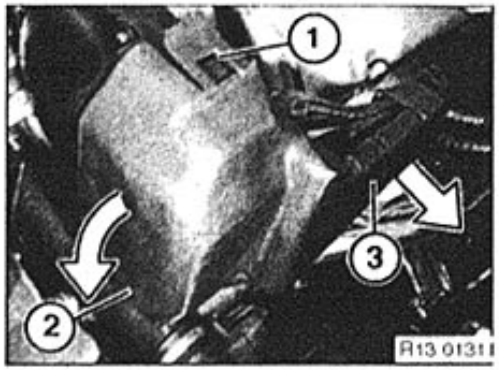

Unfasten cable tie on protective cap on distributor cap.

Unfasten clips (1-3) and remove protective cap.

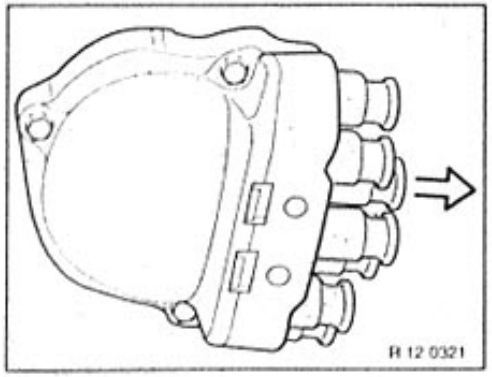

Note sequence of ignition leads on distributor cap and remove ignition leads from distributor cap.

Installation:
Note firing order when fitting the ignition leads.

Firing order,
refer to Technical Data

12 12 038 Replacing all ignition leads on right side (M73)

This operation is described in section 12 12 036.

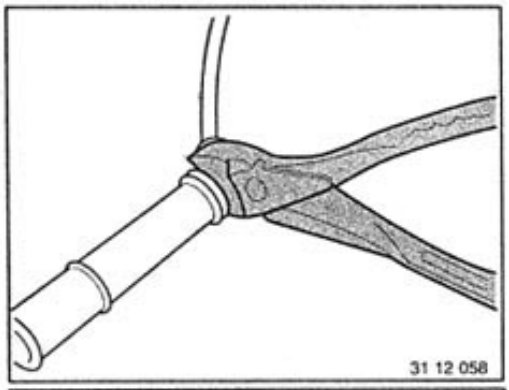

12 12 072 Replacing one spark plug connector

Switch off ignition.
Disconnect ignition lead directly behind the connector.

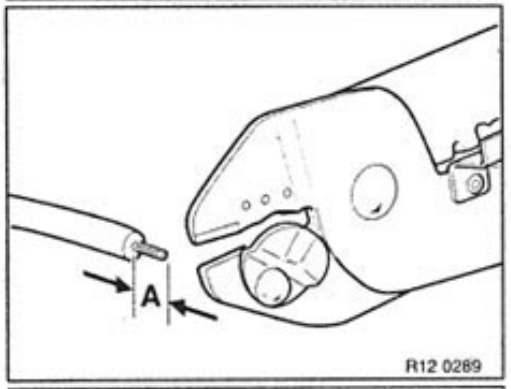

Strip insulation off a 6 mm length (A) of the ignition lead with insulation stripping pliers: wire cross section of 1.5 mm²

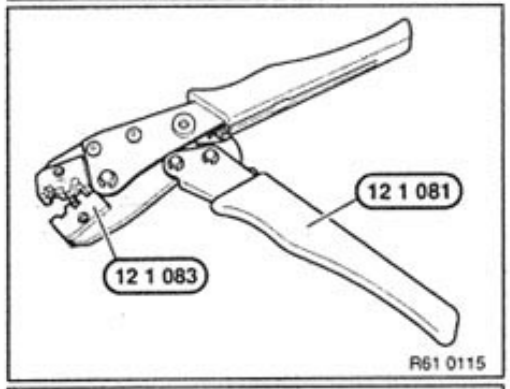

Fit special tool 12 1 083 in special tool 12 1 081.

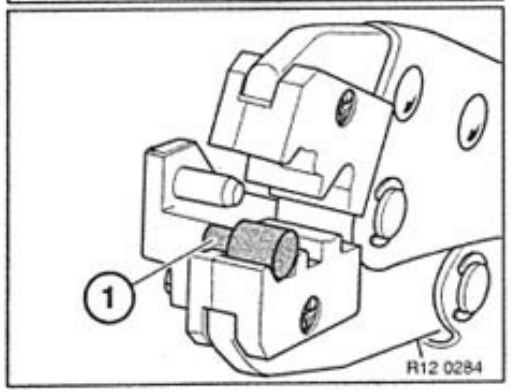

Install adapter (1) in corresponding nest in matrix.

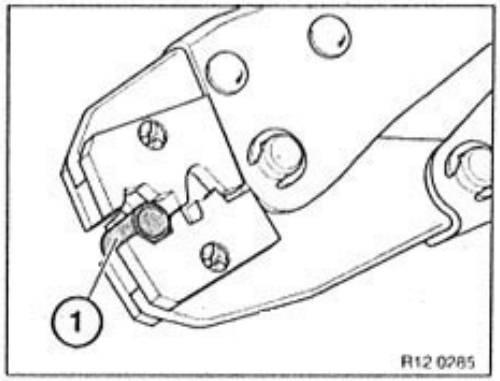

Tighten pliers by pressing handles together. This grips the adapter (1) in the matrix.

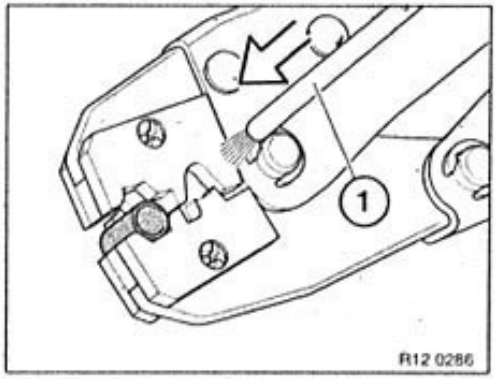

Insert stripped wires (1) firmly home in adapter. Press handles on pliers firmly together. Pliers open.

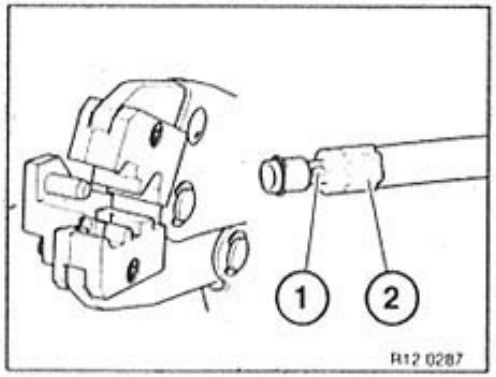

Remove crimped adapter with ignition lead. Wires (1) and insulation (2) (tension relief) must be crimped uniformly around entire circumference of adapter.

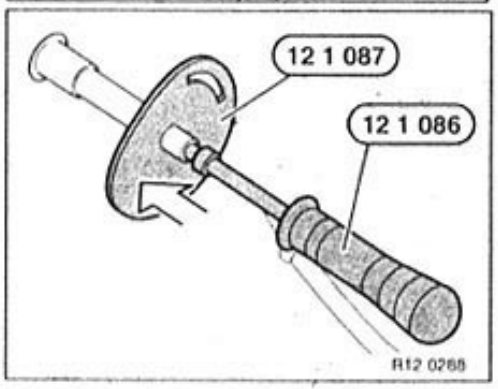

Slide special tool 12 1 087 onto spark plug connector. Spray ignition lead with special tool 12 1 088 (anti-friction agent). Insert ignition lead in special tool 12 1 086. Insert ignition lead in spark plug connector: adapter must locate audibly in spark plug connector.

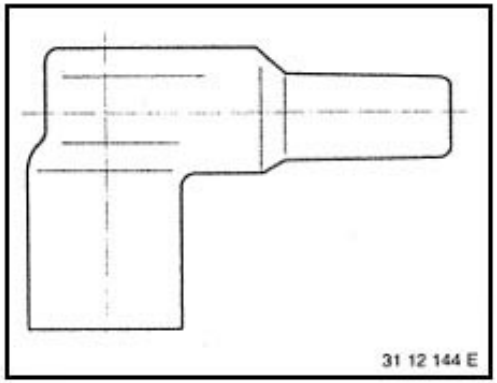

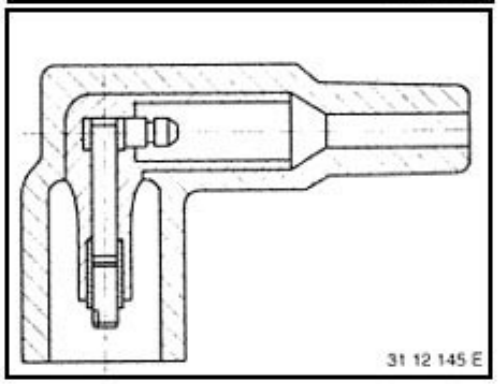

12 12 151 Replacing one suppressor plug

Assembly, refer to 12 12 072.

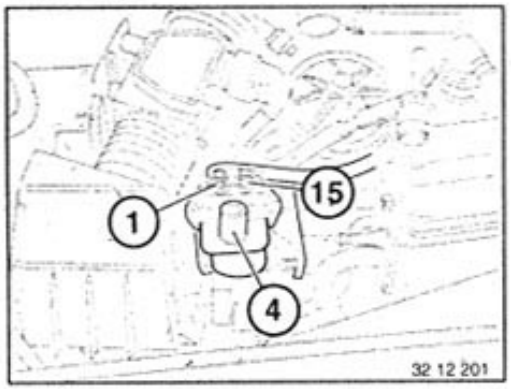

12 13 009 Checking ignition coil (M 70, S 70)

Multimeter check (M 06):
Measure resistance of primary coil
Term. 1/15 =0.5 kΩ · 10 %
and secondary coil
Term. 15/4 = 6 kΩ · 10 %

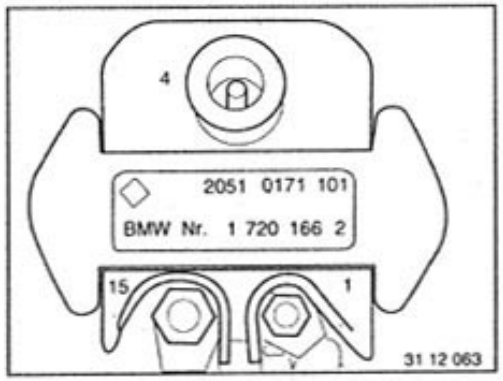

Check cast compound of primary coil carrier for hairline cracks. If gray material has emerged around the edges of the coil carrier, this indicates the presence of a defective ignition output stage in the DME control unit.

M 70:
Measurement of the right cylinder bank 1. . .6
Use adapter cable 61 2 010 and diagnosis cable. At this point, the oscilloscope receives a trigger signal from DME 1.

Perform measurement of left cylinder bank 7...12 with adapter cable 61 2 010 and universal diagnosis cable. Disconnect diagnosis cable from diagnosis connector to prevent oscilloscope from receiving a trigger signal from the wrong cylinder bank.

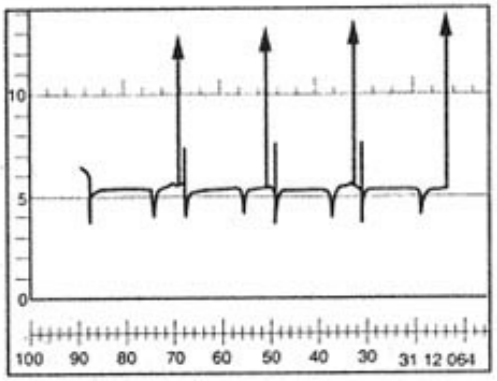

Connect BMW SERVICE TESTER to the diagnosis connector.
Perform an engine test, Test Step 09.
Note oscillogram - ignition voltage:
6 ...14 kV.
Max. permitted deviation in ignition voltage:
3 kV

Connection: near cable connector distributor - high voltage pliers to line 4 for ignition coil.
Connect trigger pliers (red) to ignition line 1 or 7.

Note: Numbering on ignition cables for cylinder bank 7...12 is the same as for cylinder bank 1...6. Cylinder 7= ignition cable 1, etc

For cylinder bank 7. . .12:
Connect the universal diagnosis cable of the Tester to the ignition coil:
Black clip on terminal 1, brown clip to vehicle ground

Note:
Very high ignition voltage deviations, indicated in Test Step 09, may be caused by incorrect connection of the Tester (connection to the wrong cylinder bank).

Note:
Cylinder recognition sensor on left side, on ignition line for cylinder 12.
Right side on ignition line to cylinder 6.

12 13 009 Checking ignition coil (M73)

Refer to
Repair Instructions for 7 Series E38.

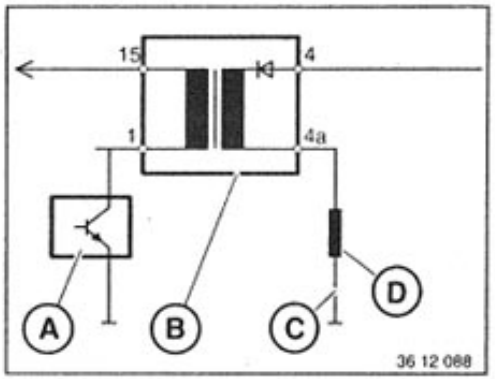

12 13 009 Checking ignition coil (M 60)

Circuit diagram for ignition coil in breakerless ignition distribution.

(A) Piloting of primary coil in ignition coil of DME
(B) Ignition coil
(C) Ground connection of secondary coil
(D) Measuring resistance which is installed in ground wire shared by ignition coils.
The measuring resistance is required for fault recognition in the secondary circuit of the ignition coils.
The fault is stored in the fault memory of the DME control unit.

Resistance check:
Primary coil: Nom. value 0.4 - 0.8 Ω
Secondary coil not registering on measuring instrument.
Pin allocation on ignition coil connector

(1) Terminal 15
(2) Terminal 4a
(3) Terminal 1

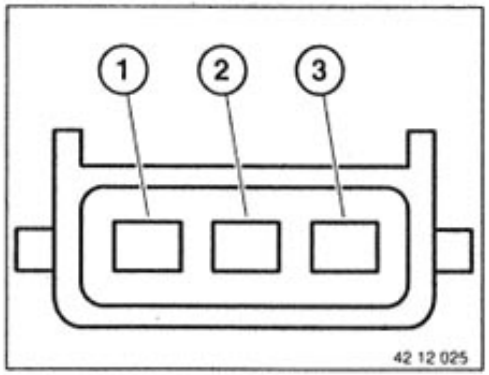

Visual inspection of the ignition coil:
Check cast compound of primary coil carrier for hairline cracks. If gray material has emerged around the edges of the coil carrier, this indicates the presence of a defective ignition output stage in the DME control unit.

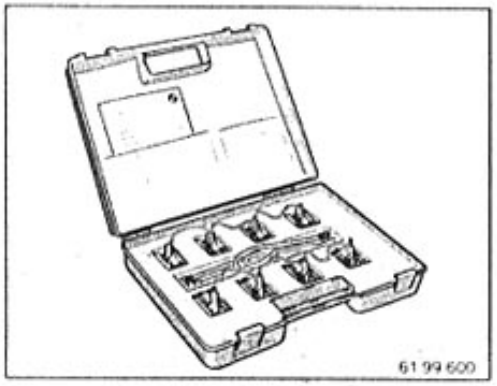

12 13 . . . Check secondary voltage with the help of test adapter kit 12 7 040

Use the adapter kit to perform the following checks:
Secondary voltage check
Comparison of ignition coils from different manufacturers
Fault in ignition coil
Fault in spark plug
Fault in injection system

Caution!
Note safety instructions on page 12-0!

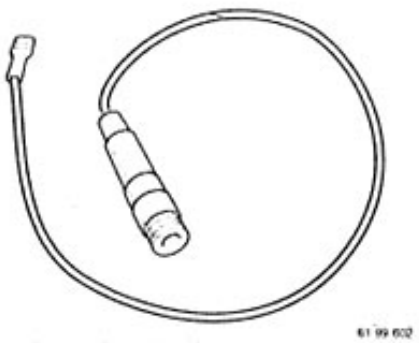

Connecting cable for BMW Service Tester 12 7 042. For connection to the Service Tester, the high voltage pliers must be unscrewed from the Service Tester line.

If no BMW Service Tester is available, a standard workshop oscilloscope with these measuring cables can be used. Connecting cable 12 7 042 is replaced by the measuring cable on the oscilloscope. The unit is then triggered externally by the induction pliers, attached to the primary voltage source on cylinder one.

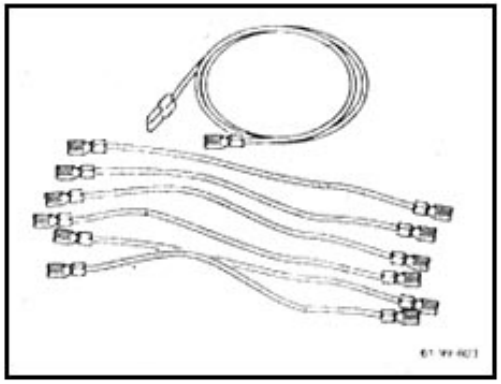

Attach connecting cable 12 7 043 to the single adapters 12 7 041 and attach connecting cable 12 7 042 for BMW Service Tester.
Connecting cable 12 7 043

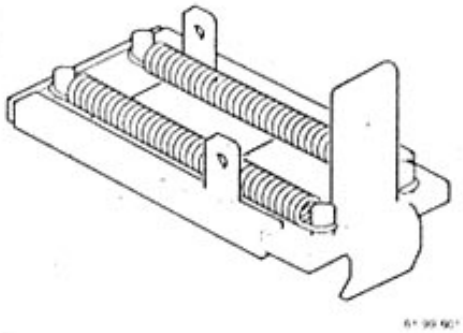

Single adapter 12 7 041 for fitting to the ignition coil.

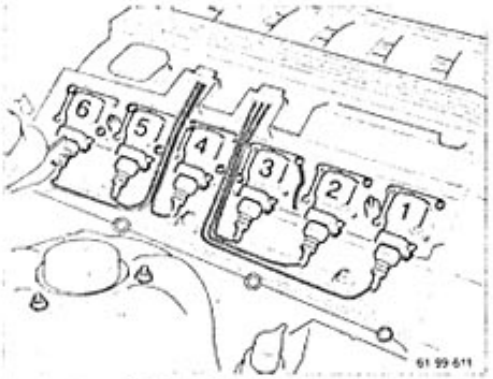

M 50:

Observe all safety instructions!
Switch off ignition.
Remove ignition coil cover.
Firing sequence 1-5-3-6-2-4

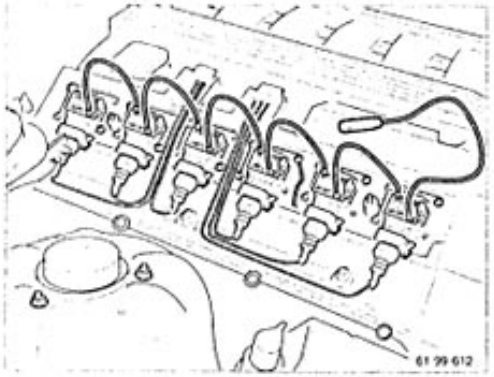

Fit single adapter 12 7 041 to the ignition coils and attach to the connecting cable kit 12 7 043.

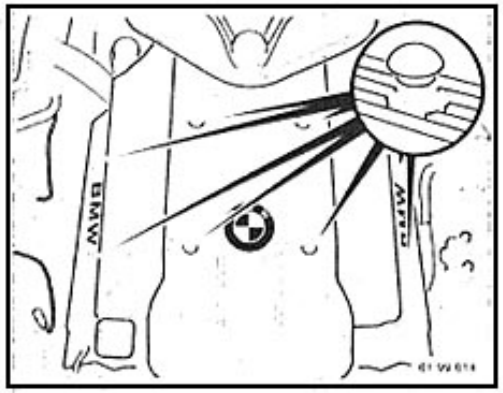

M 60:

Observe safety instructions!
Switch off ignition.
Remove ignition coil cover.
Firing sequence 1-5-4-8-6-3-7-2

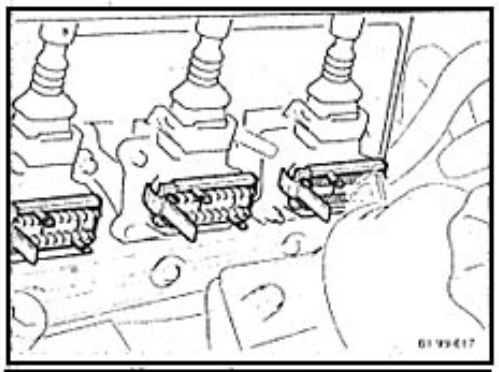

Fit single adapter 12 7 041 to the ignition coils and attach to connecting cable kit 12 7 043.

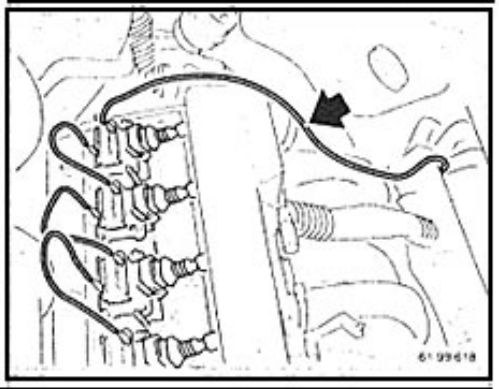

Note:
Use long connecting cable from connecting cable kit 12 7 043 for connecting the adapters of cylinder banks 1-4 and 5-8.

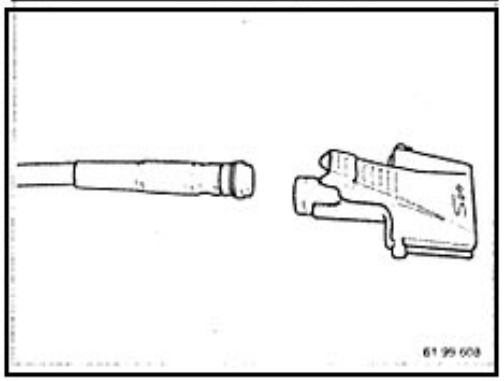

Connect BMW Service Tester:

Unscrew high voltage pliers from connecting cable of BMW Service Tester.
Attach connecting cable 12 7 042 to the high voltage adapter line of the BMW Service Tester.

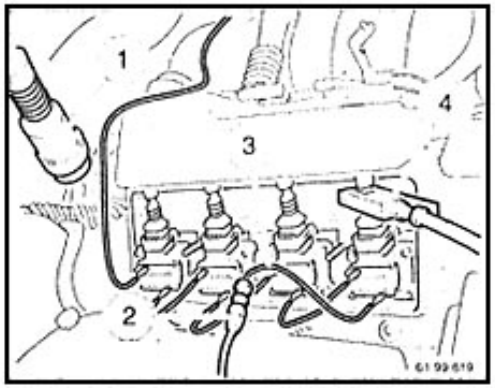

Connect BMW Service Tester to the diagnosis receptacle (1) on the vehicle.
Attach connecting cable 12 7 042 (2) to the high voltage connecting line (3) of the BMW Service Tester.
Connect trigger pliers (4) of the BMW Service Tester to the lead serving the ignition coil on cylinder one.

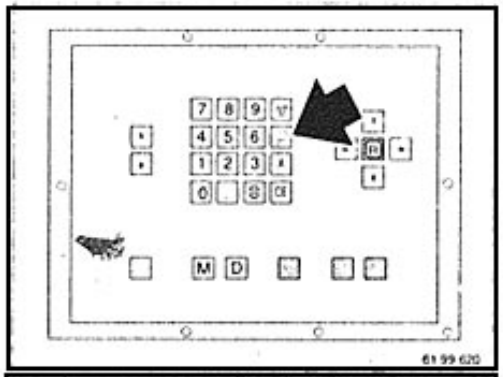

BMW Service Tester
Select test step 01 (engine). Next, select the following test step 10 (fuel mixture, exhaust).

Enter the number of cylinders.

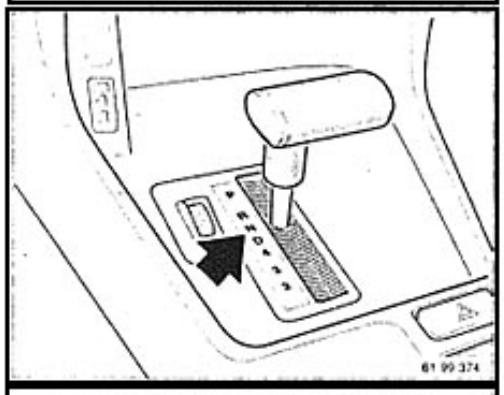

Apply handbrake and move shift lever into neutral setting. With automatic transmission, move selector lever into setting "P".

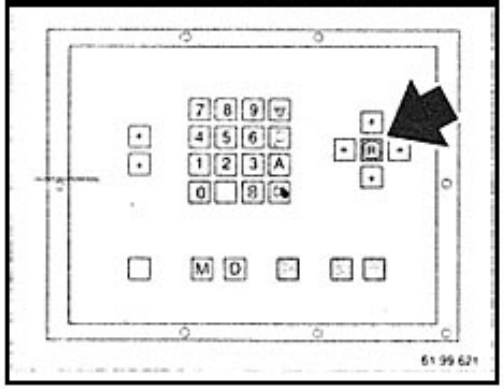

Select display modes for secondary voltage patterns on the oscilloscope by pressing the "R" button. Presentation of images (side-by-side, descending order, ascending order).

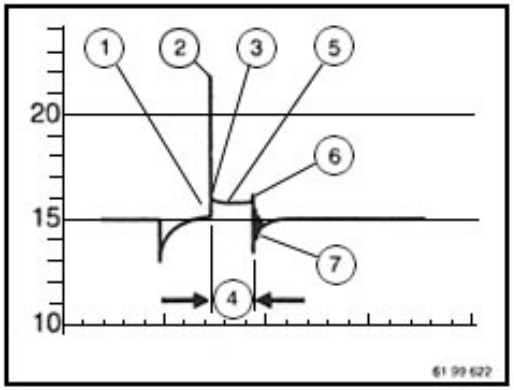

Normal oscillogram

1 Start of ignition voltage spike
2 Tip of ignition voltage spike
3 Tip of combustion voltage spike
4 Combustion period
5 Combustion voltage curve
6 Start of attenuation procedure
7 Decay current

Display side-by-side
Evaluation of combustion voltage line and attenuation procedures.
Idle speed

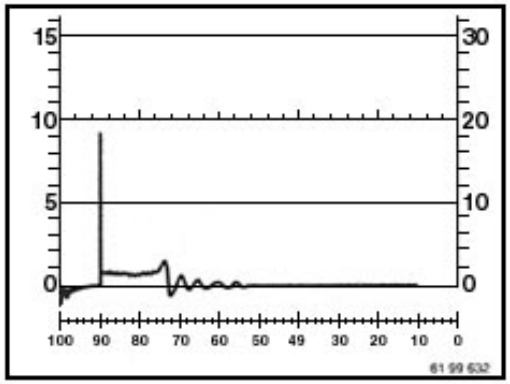

Consecutive displays
Idle speed

Large deviations in the ignition voltage patterns can be identified.
The allocation of fault detected to relevant cylinder must be performed using consecutive or side-by-side display modes.

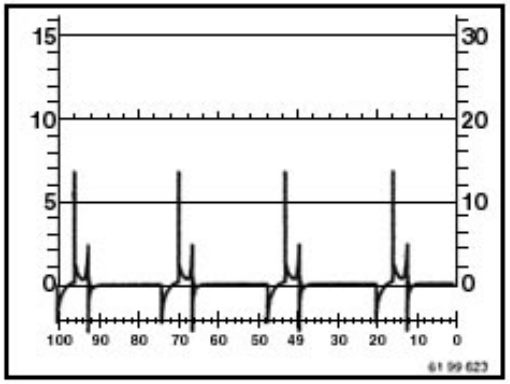

The display of ignition voltage peaks is approx. 20-25% lower than the real value.
More important than the tip of the ignition voltage spike is the uniformity of all cylinders. Deviations of 3000-4000 V are permitted.
If deviations exceed these values, refer to the following pages of "Fault Patterns".

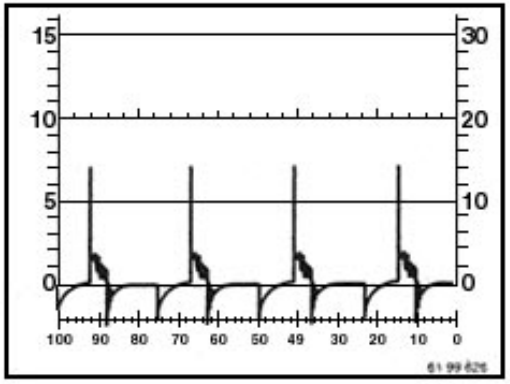

Display at increased speed of approx. 2000 min $^{-1}$.
Evaluation of ignition voltage spikes.

Oscillogram readings of ignition coils from different manufacturers

Evaluation of ignition voltage spikes and the attenuation process at idle speed

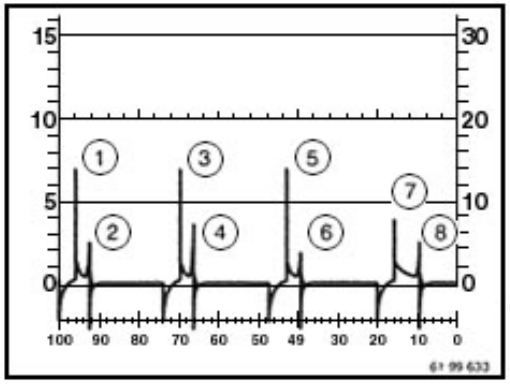

Manufacturer: Bremi
1 Normal ignition voltage spike (6000 - 9000 V)
2 Usual

Manufacturer: Beru
3 Normal ignition voltage spike
4 High start of attenuation processes

Manufacturer: May & Christe
5 Normal ignition voltage spike
6 Low start of attenuation processes

Manufacturer: Bosch
7 Low ignition voltage spike
8 Normal start of attenuation processes
Note:
At high engine speeds, the ignition voltage spike becomes shorter - significantly shorter than units from other ignition coil manufacturers.

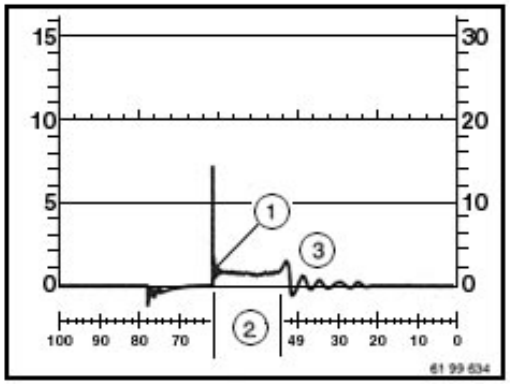

Evaluation of combustion voltage spike at raised engine speed of approx. 2500 min -1.

Manufacturer: Bremi

1 Normal response of combustion voltage curve
2 Normal combustion period
3 3 to 4 attenuations

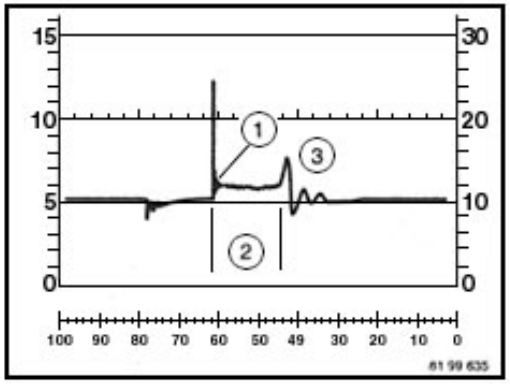

Manufacturer: Beru

1 Normal response of combustion voltage curve
2 Normal combustion period
3 At least 3 attenuations

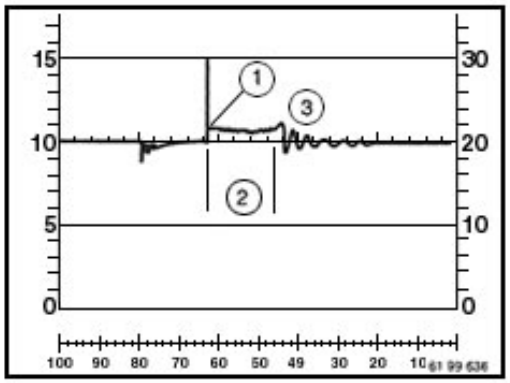

Manufacturer: May & Christe

1 No response from the combustion voltage curve
2 Normal combustion period
3 At least 5 attenuations

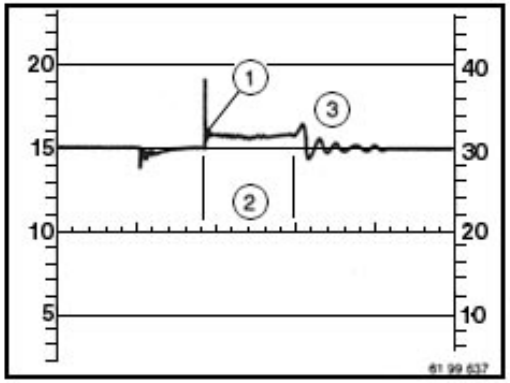

Manufacturer: Bosch

1 Normal response for combustion voltage curve
2 Long combustion period
3 At least 3 attenuations

Ignition coil fault

Evaluation of ignition voltage spikes and the attenuation process at idle speed.

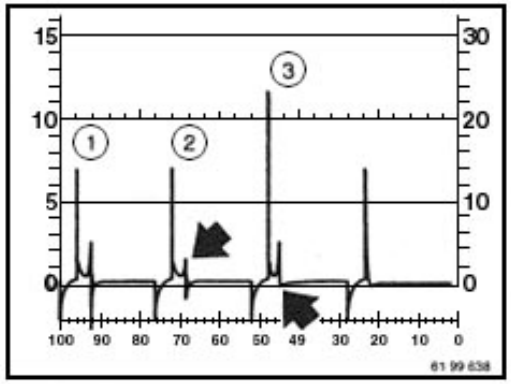

1 Start of attenuation processes - normal size upwards and downwards

2 Start of attenuation processes severely abbreviated
Ignition coil defective!

3 Start of downwards attenuation processes missing
Ignition coil defective!
Note:
Increased ignition voltage peak no longe present.

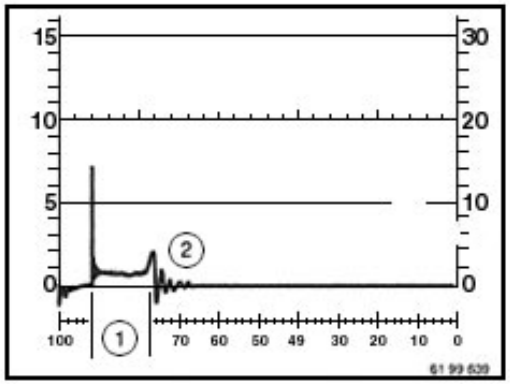

Evaluation of combustion voltage curve at idle speed

1 Normal combustion period
2 Normal attenuations after combustion voltage curve.
Ignition coil OK

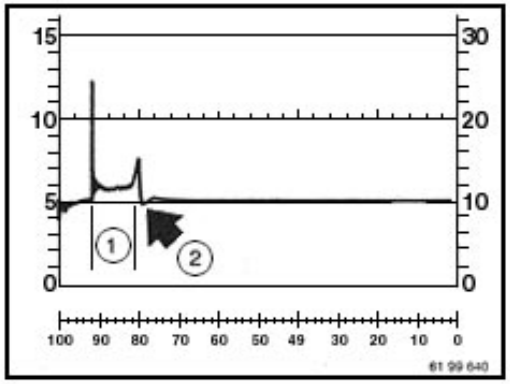

1 Shortened combustion period
2 Only slight attenuations present after combustion voltage curve.
Ignition coil defective!

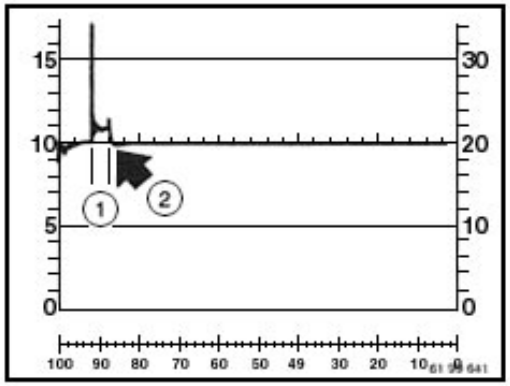

Severely abbreviated combustion period
Attenuations after combustion voltage curve absent
Ignition coil defective!

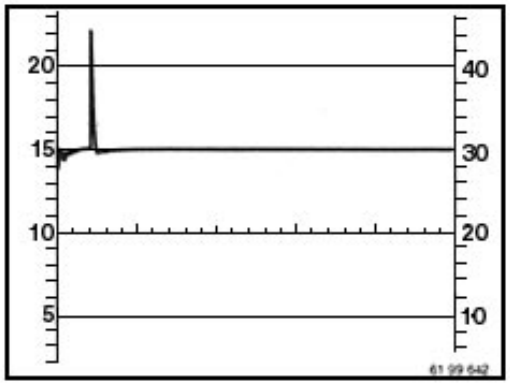

No combustion voltage curve.
Ignition coil defective!

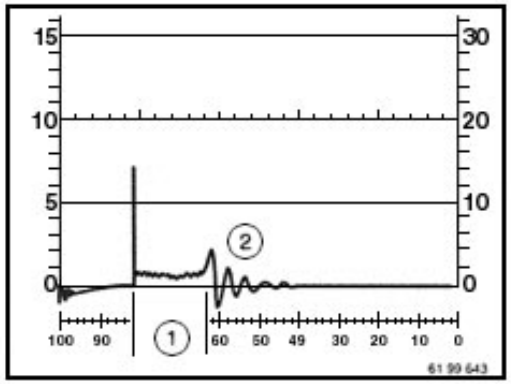

Evaluation of combustion voltage curve at raised engine speed of approx. 1500 min^{-1}

1 Normal combustion period
2 Normal attenuations after combustion voltage curve.
Ignition coil OK

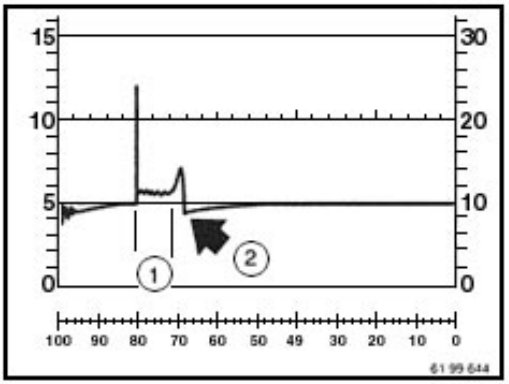

1 Shortened combustion period
2 Only slight attenuations present after combustion voltage curve
Ignition coil defective!

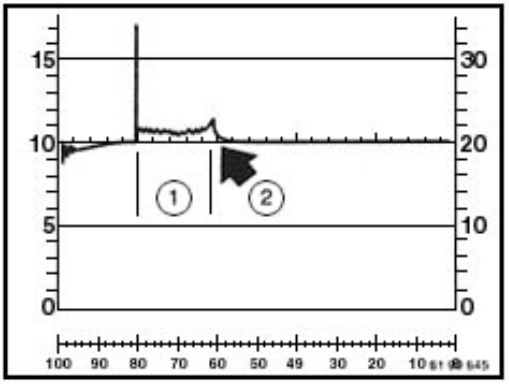

1 Normal combustion period
2 Attenuations after combustion voltage curve absent
Ignition coil defective!

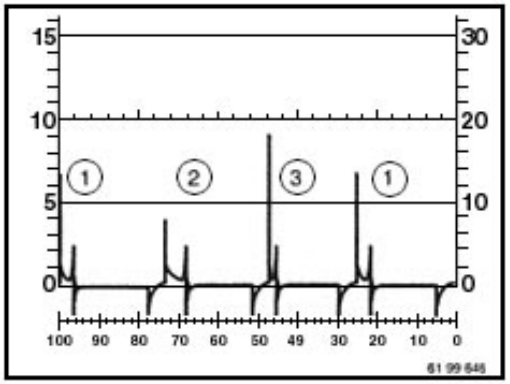

Spark plug defects

1 Normal ignition voltage spike:
spark plug OK
2 Low ignition voltage spike
Small electrode gap
3 High ignition voltage spike
Large electrode gap

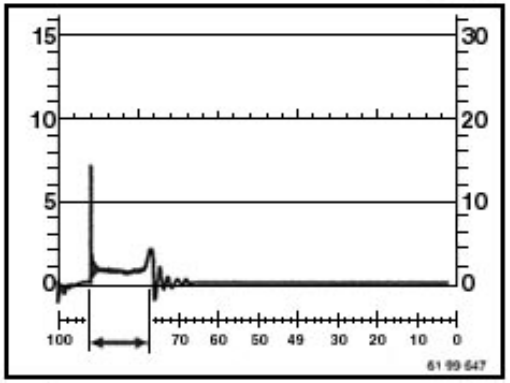

Evaluation of combustion period at idle speed

Normal combustion period
Spark plug OK

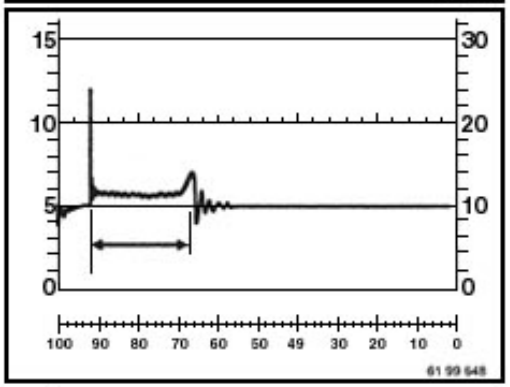

Long combustion period
Small electrode gap

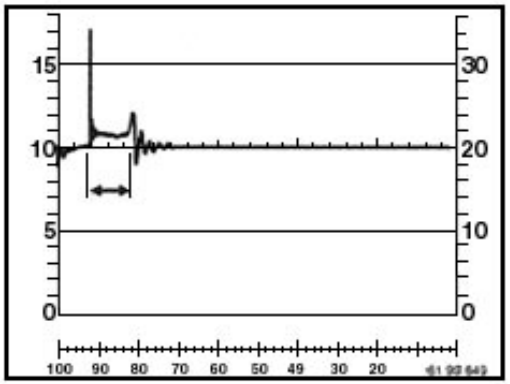

Short combustion period
Large electrode gap

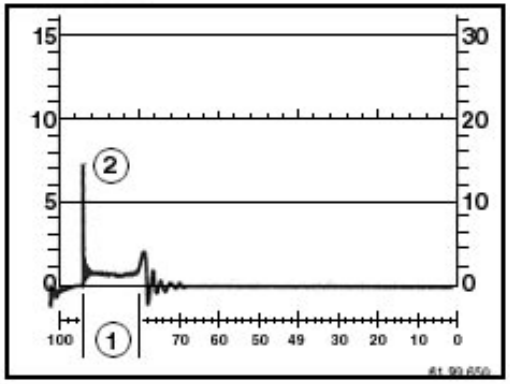

Additional fault patterns with evaluation

Evaluation of combustion period of ignition voltage spikes at idle speed

1 Normal combustion period
2 Normal ignition voltage spike
Ignition system OK

Excessive ignition voltage:

Electrode gap	large
Compression	high
Fuel mixture formation	lean
Electrode temperature	low
Electrode gap	burned out
Ignition cable	interrupted

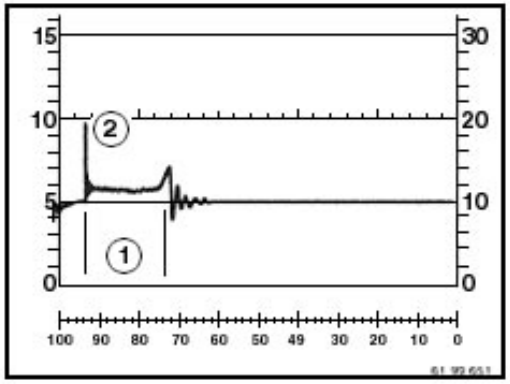

Long combustion period (1) with low ignition voltage spike (2).
Suggestive of low compression.
Fluctuating combustion period:
Suggestive of impurities in spark plug (shunt)

Excessively low ignition voltage:

Electrode gap	small
Compression	low
Fuel mixture formation	correct
Electrode temperature	high
Electrode condition	new

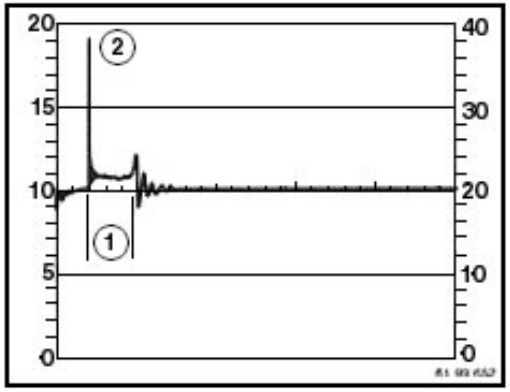

Short combustion period (1) with high ignition voltage spike.
Constant but brief combustion period:
Suggestive of defective ignition cable.
Note:
The combustion voltage curve may be entirely absent and the ignition voltage spike may be very high.

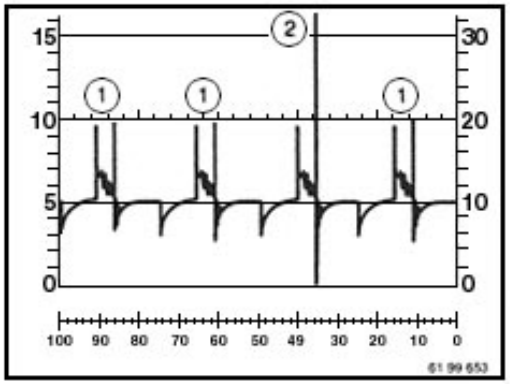

Fault in the injection system

Evaluation of ignition voltage spike when accelerator applied suddenly

1 Start of attenuation process is not significantly higher than the ignition voltage spike.
Injection system OK.

2 Start of attenuation process is significantly higher than the ignition voltage spike.
Fault in the injection system:
a) Lean fuel mixture
b) Defective injection valve
c) Low compression

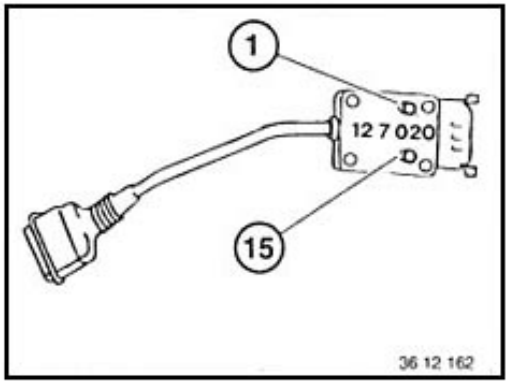

Additional fault instructions on troubleshooting

For troubleshooting on the primary side of a single ignition coil, use adapter for primary voltage measurement and special tool 12 7 020.

If terminal 1 signal is absent on pin 1 in the diagnosis receptacle, with the help of special tool 12 7 020, the trigger signal for the Service Tester can be prepared externally.

Connect up BMW Service Tester.
Select Engine Test Step 05.

Select four-cylinder unit.
Connect universal adapter cable to tester.
Connect brown terminal to vehicle ground.
Black terminal to terminal 1 of special tool 12 7 020.

If there is no trigger signal in the diagnosis receptacle for a 6-cylinder engine, preselect two- cylinder unit on Service Tester.

Do not use red inductive pliers because only one cylinder is being measured. For this reason, an engine speed display of factor 4 is too low.
Connect special tool 12 7 020 to the ignition coil to be measured, and to the vehicle wiring harness.

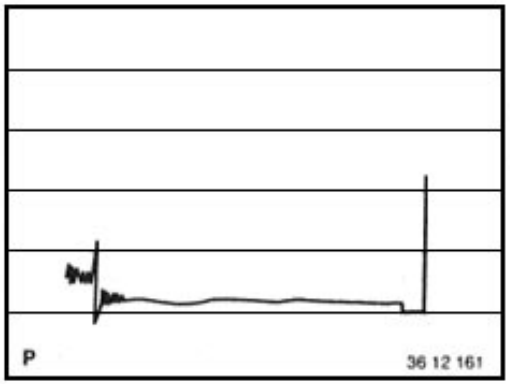

Generate standing signal on oscilloscope by pressing button R on the Service Tester.
Note:
The combustion voltage curve on the oscilloscope is very unsteady because, on a 4-valve engine, the combustion mixture swirl effect is more pronounced than in a 2-valve engine.

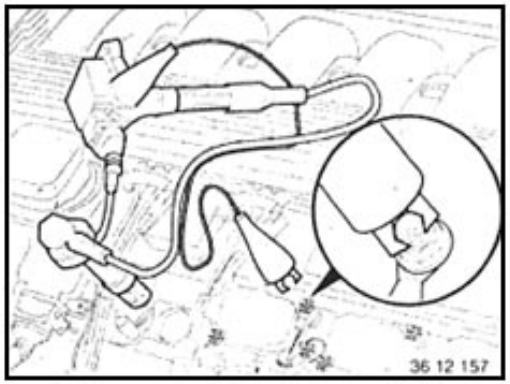

Checking secondary signal for breakerless ignition distribution (special tool 12 7 030)

Engine test step 10

Remove ignition coil. Attach special tool 12 7 030 to the ignition coil to be measured. Attach high-voltage pliers to the ignition lead.

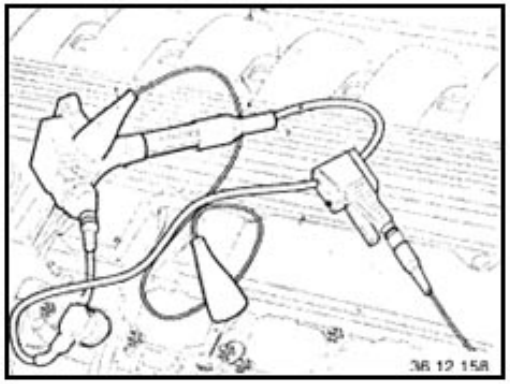

Connect ground lead of adapter to vehicle ground and the ignition coil. Connect up diagnosis connector.
In the absence of a trigger signal (terminal 1), connect black terminal of universal adapter cable to Pin 1 of the primary adapter cable.

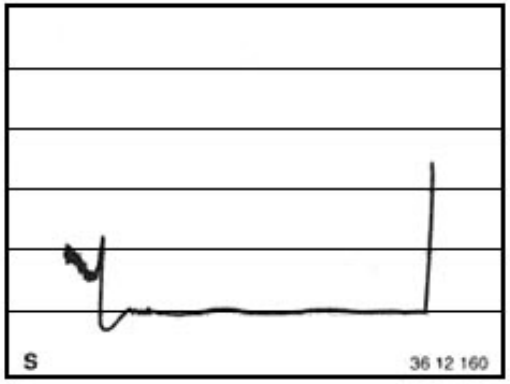

Generate standing signal on the oscilloscope by pressing button R on the Service Tester.

Note:
Neighboring ignition leads can give rise to interference in the oscilloscope screen display.

For additional troubleshooting steps, see fault memory in the engine control units.
Interrogate the fault memory and obtain fault messages - see Electrical Troubleshooting Manual.

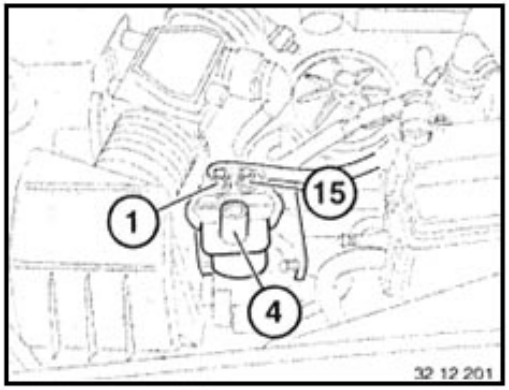

12 13 011 Replacing ignition coil (M 70, S 70)

Caution!
Only work on the ignition system with the ignition switched off - high voltage - danger of death.
Note instructions for working on ignition system - see Page 12 - 0.

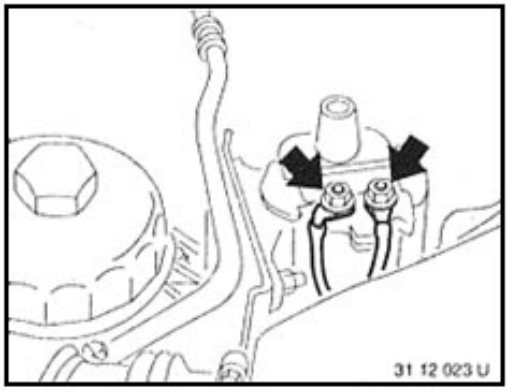

Remove protective cap and ignition lead (terminal 4).
Unfasten connections (term. 1 and term. 15).
Disconnect bracket and remove ignition coil.

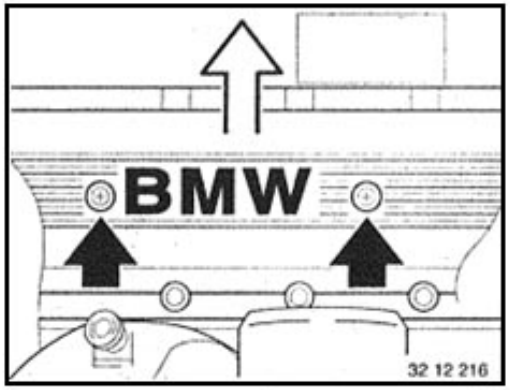

12 13 011 Replacing ignition coils (M 60)

Unclip cover over screws in cylinder head cover.
Unfasten screws.
Remove cover from cylinder head cover.

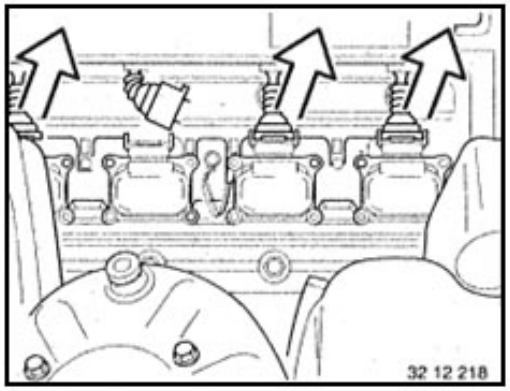

Unfasten plug connections for ignition coils.

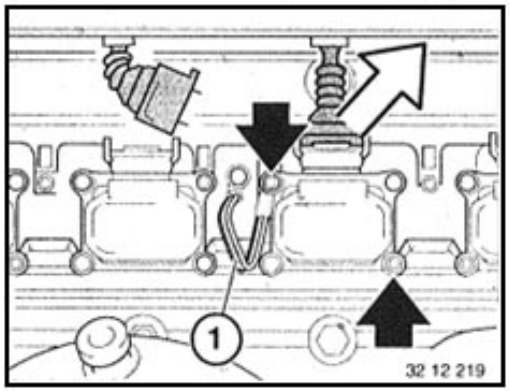

Unfasten screws of ignition coils.

Installation:
On the ignition coils for cylinders 2 and 6, the ground tapes (1) from the cylinder head cover must be secured to the ignition coil screw connections.

12 13 511 Replacing ignition coil (M73)

Switch off ignition.

Removal illustrated here with example of ignition coil on left side. Cylinder bank 7-12.

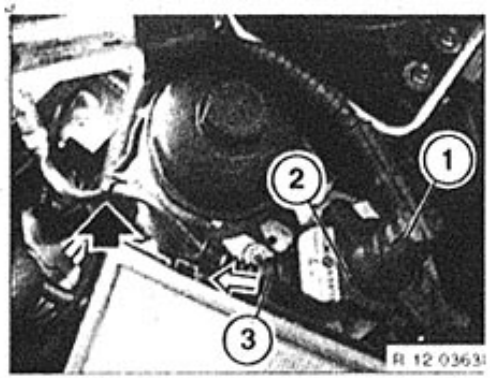

Disconnect plug connection (1). Remove cap (2). Disconnect plug connection (3).

Installation:
Note routing of line in cable clip.

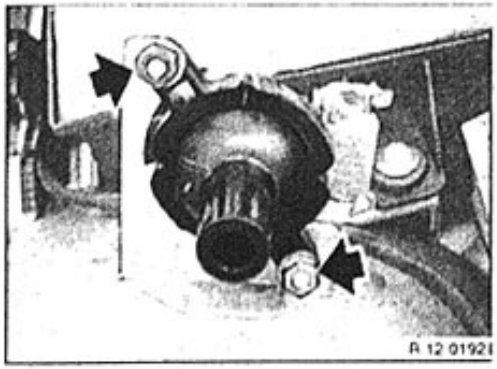

Unscrew nuts.
Ignition coil remove.

Installation:
Interrogate fault memory of control unit for Digital Motor Electronics (DME), check faults in memory, rectify them, then cancel the fault memory.

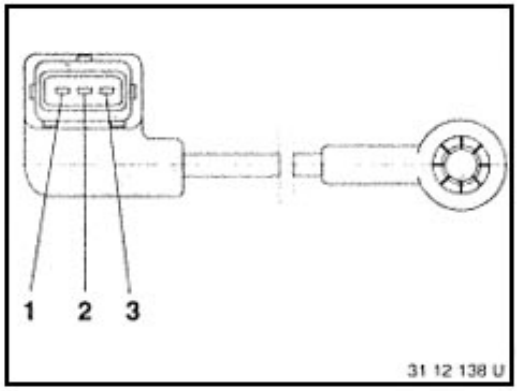

12 14 . . . Checking sender for cylinder identification (M 70, S 70)

Measure resistance in coil between pin 1 and pin 2.
Nominal value: ~ 1 Ω
Insulation resistance between pin 2 and pin 3.
Nominal value: ~ 10 MΩ

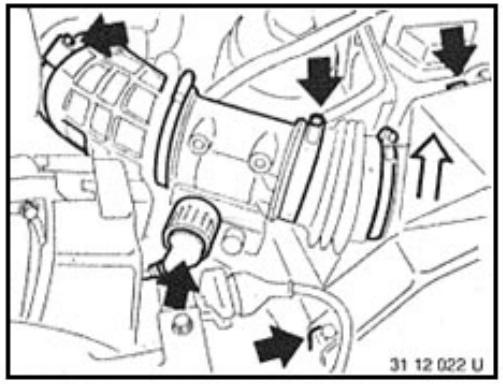

12 14 150 Replacing sender for cylinder identification (M 70, S 70)

M 70:
Remove complete upper section of suction filter housing with mass air flow sensor.

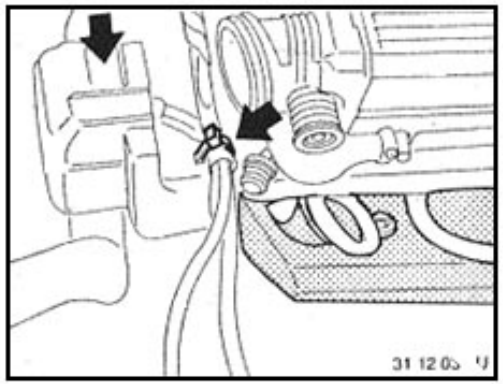

Unfasten cable connector.
Remove cover from distributor cap.

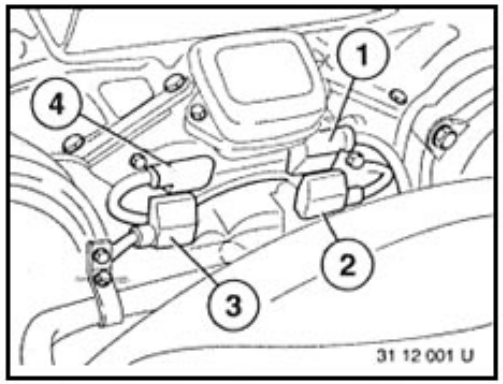

Senders are fitted to the ignition lead of cylinder numbers 6 / 12.
Disconnect suppression plug from ignition lead.
Remove sender from ignition lead.

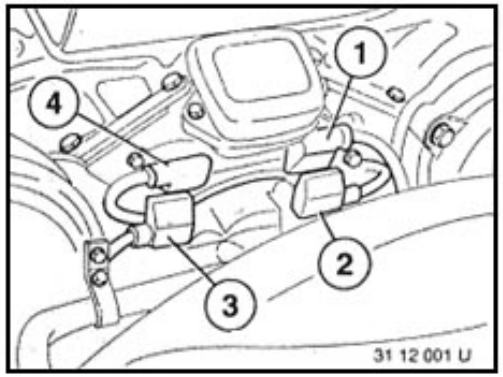

Cylinder bank 1...6: (right cylinder bank)
Disconnect plug connection – remove cable.
Fit new sender.

4 = inductive impulse sensor
3 = cylinder identification sender

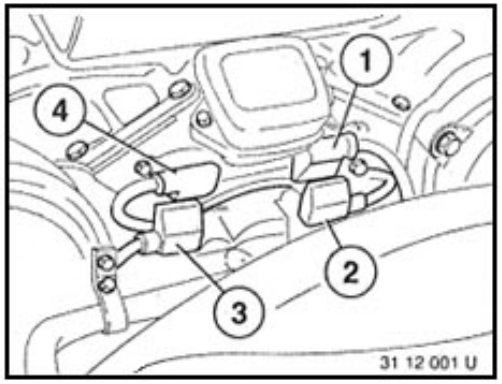

Cylinder bank 7...12: (left cylinder bank)
Disconnect plug connection – remove cable.
Fit new sender.

1 = cylinder identification sender
2 = inductive impulse sensor

Installation:
Fit suppression plug.
See Constr. Group Item 12 12 072

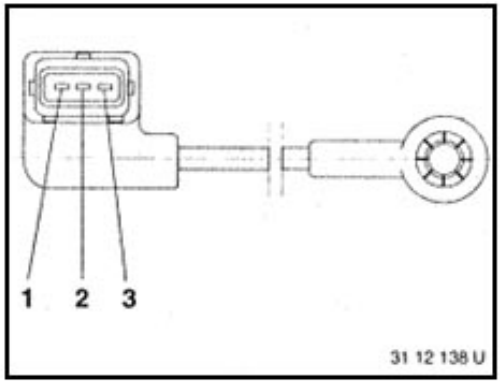

Check sender:
Measure resistance* of coil between line 1 and 2.

* Refer to Technical Data

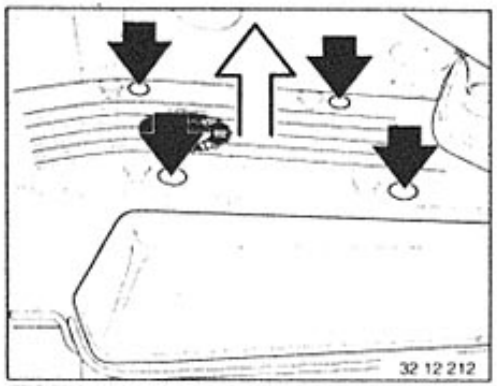

12 14 150 Replacing sender for cylinder recognition (camshaft sender) (M 60)

Interrogate fault memory
Switch off ignition.
Remove cover from screws on valve cover.
Unfasten screws.
Remove cover.

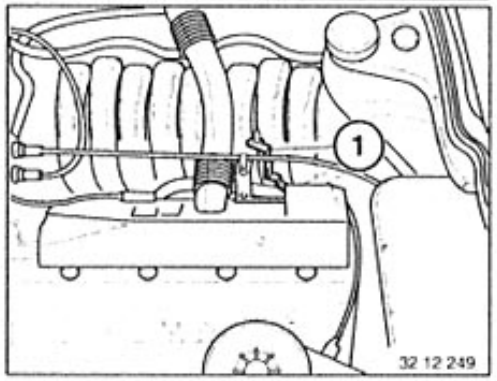

Disconnect plug connection (1).

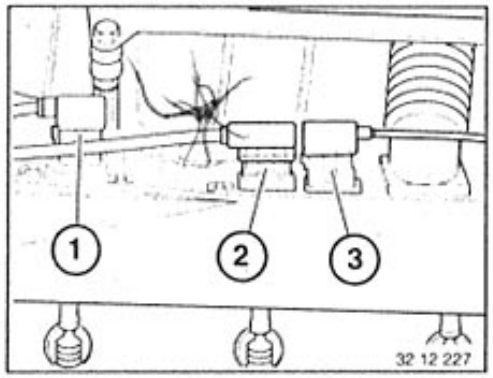

Disconnect plug connection (1).

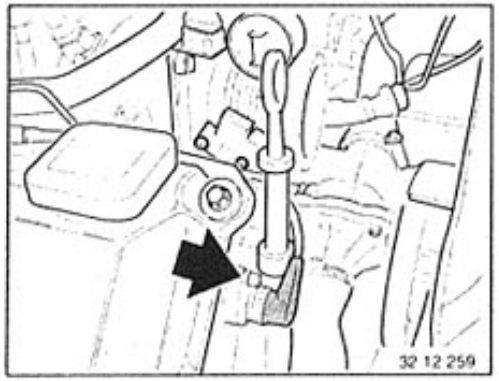

Unfasten screw.

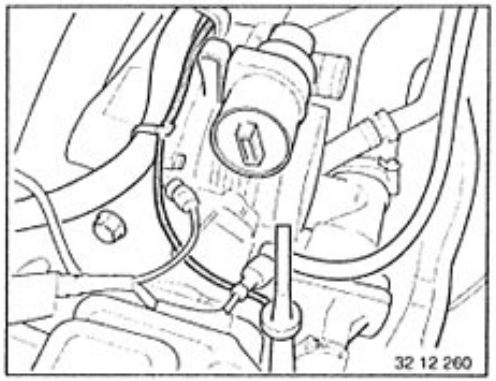

Installation:
Note wiring layout on injection pipe.

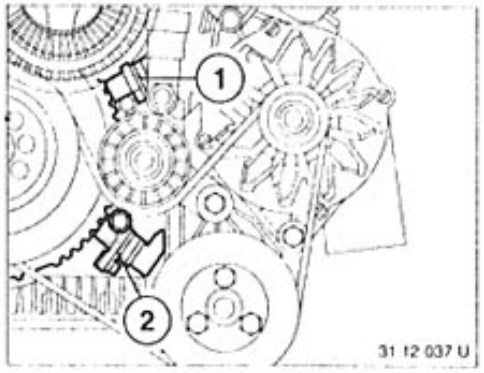

12 14 . . . Checking impulse sensor

M 70:
At top of timing case cover. Check that impulse sensor (1) for DME 1 is securely seated and free of damage.
At bottom of timing case cover.
Check impulse sensor (2) for DME 2 is securely seated and free of damage.

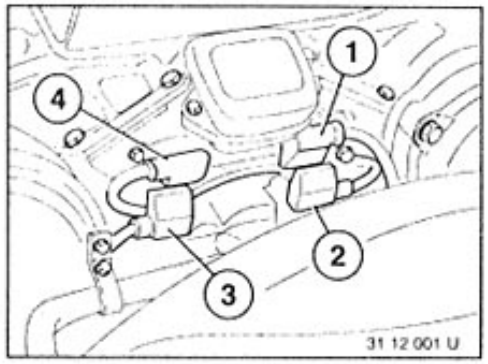

Unfasten connector (4), impulse sensor 1, right cylinder bank.
Unfasten connector (2), impulse sensor 2, left cylinder bank.

M 70, M 60:
Select multimeter test on BMW Service Tester (M 06):
Plug connection disconnected.
Resistance measurement between pins 1 and 2:
Nominal value: 520 Ω ± 5 %
Check the shielding:
between pins 1 and 3 : > 100 kΩ
between pins 2 and 3 : > 100 kΩ

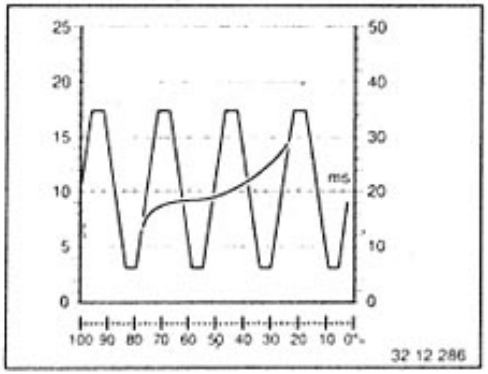

Connect oscilloscope to connections 1 and 2 of impulse sensor (M22/23).
Turn crankshaft with starter motor.
This signal should appear on the screen.

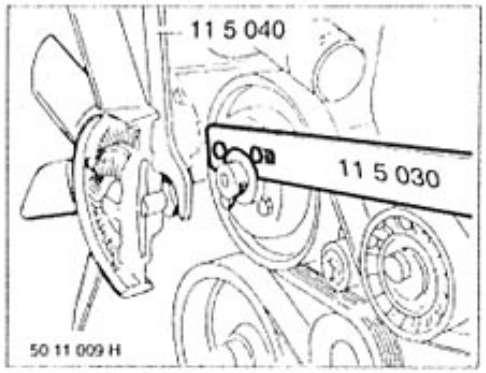

12 14 152 Replacing impulse sensor in left cylinder bank (M 70, S 70)

Remove fan.

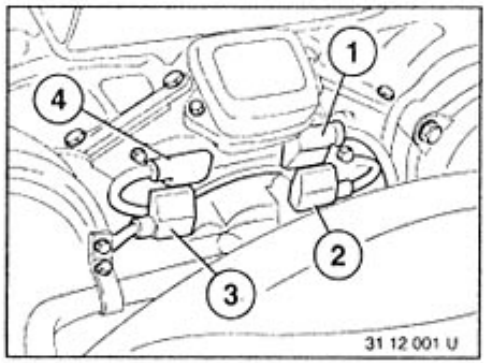

Unfasten plug connection (2) in bracket in top of timing case cover.

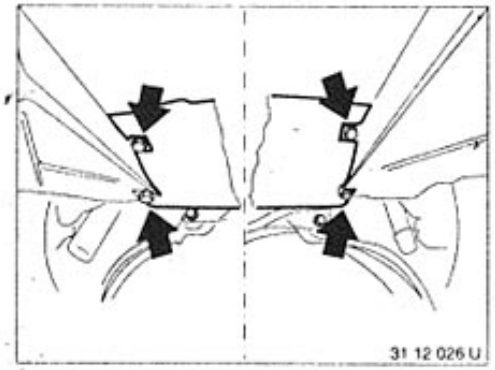

Remove underbody protection from assemblies.

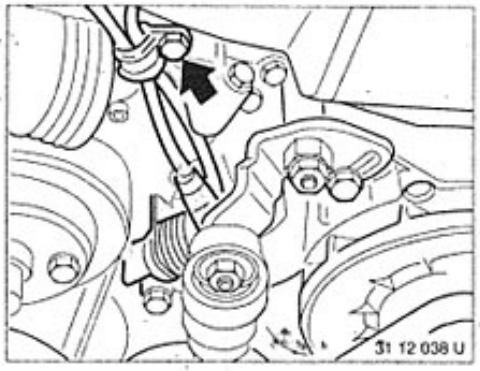

Unfasten retaining strap from top of timing case cover.

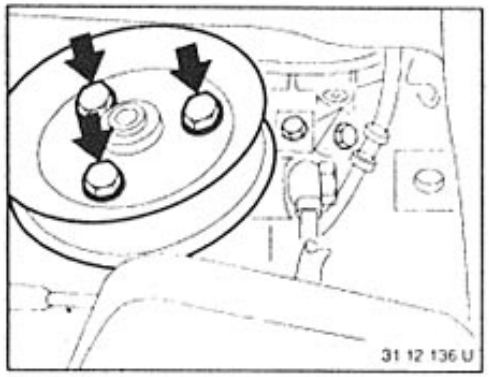

Unscrew pulley on power steering pump.

Unscrew cool air guide for alternator.

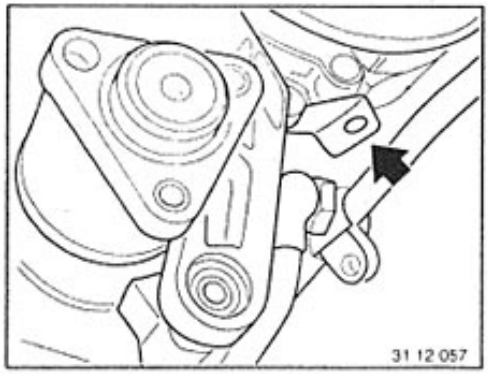

Unscrew both holders for hydraulic fluid pipes.

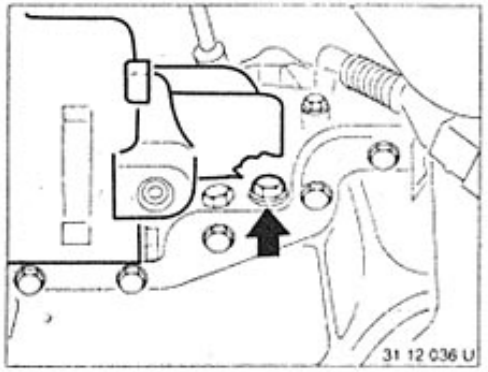

Unscrew holder for hydraulic fluid pump on engine block.

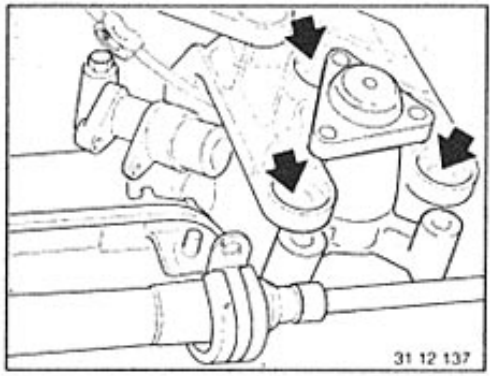

Loosen front power steering pump console bolts.

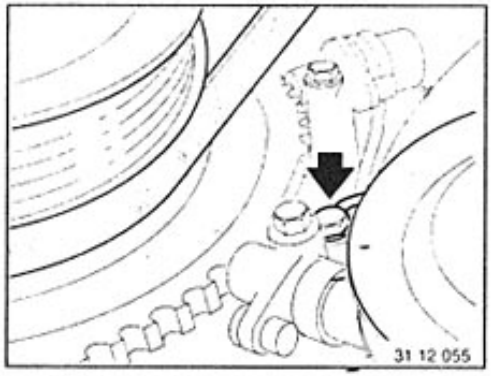

Unscrew pipe holder on lower timing case cover.
Turn increment wheel until bolt head is accessible through a tooth gap.

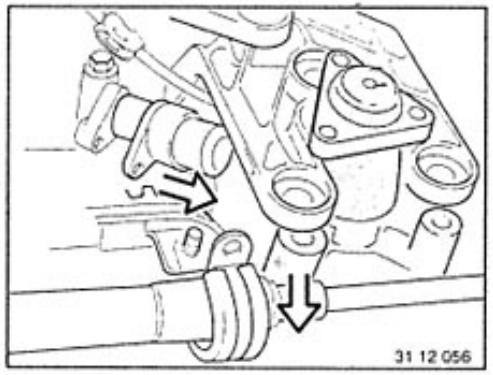

Unscrew pulse sender.
Press hydraulic fluid pump aside and remove the pulse sender.

Checking Increment Wheel:
TDC mark must be at middle of a tooth.
Beginning at the TDC mark and continuing in the engine's direction of rotation there must be a gap after 30 teeth.

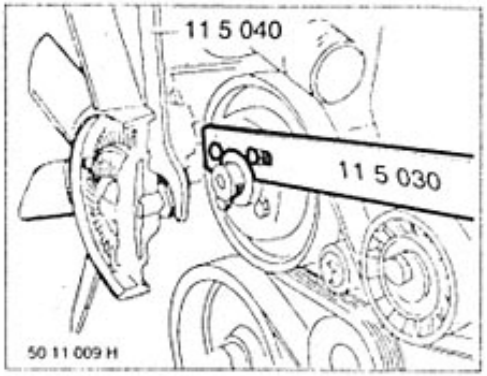

12 14 153 Replacing impulse sensor on right cylinder bank (M 70, S 70)

Remove fan.
Remove complete clamping fixture for toothed Vee belt.

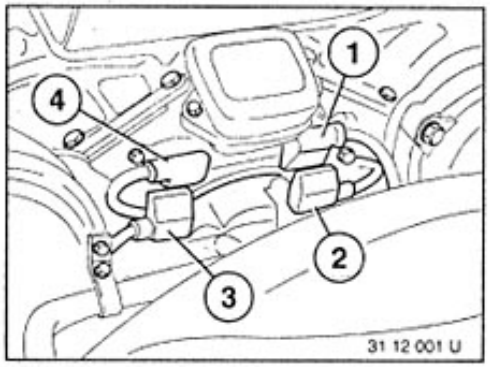

Unfasten top of plug connection (4) in bracket for timing case cover.

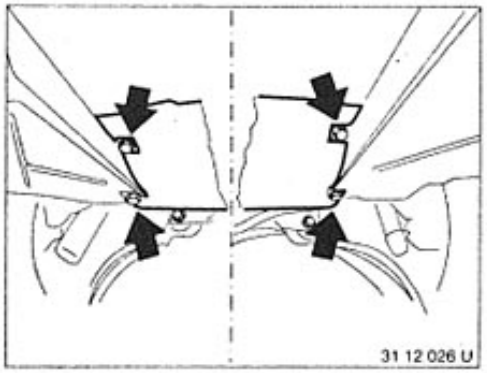

Remove underbody protection from assemblies.

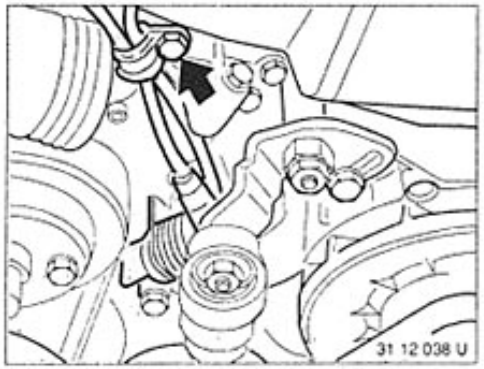

Unfasten line bracket from top of timing case cover.

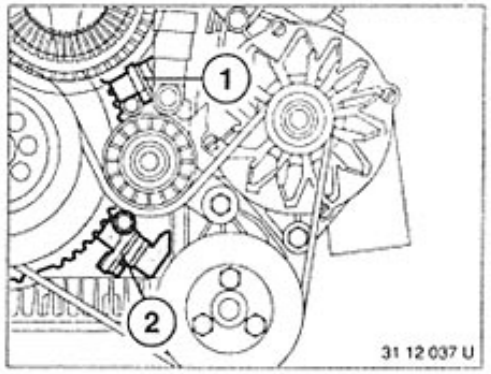

Unfasten impulse sensor (1) and remove.

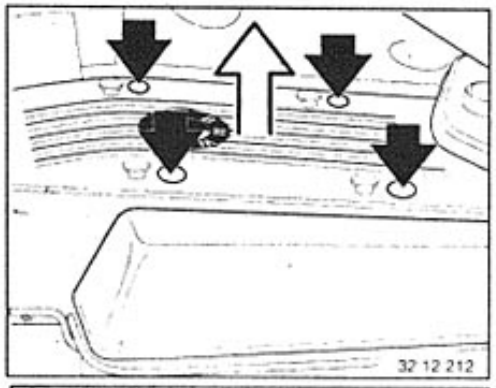

12 14 155 Replacing impulse sensor (M 60)

Interrogate fault memory.
Switch off ignition.
Unfasten cover from screws in valve cover.
Unfasten screws.
Remove cover.

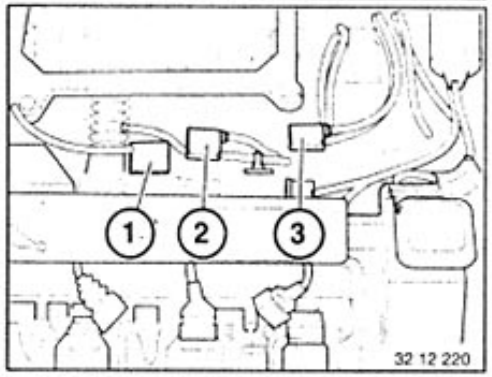

Disconnect plug connection (3).

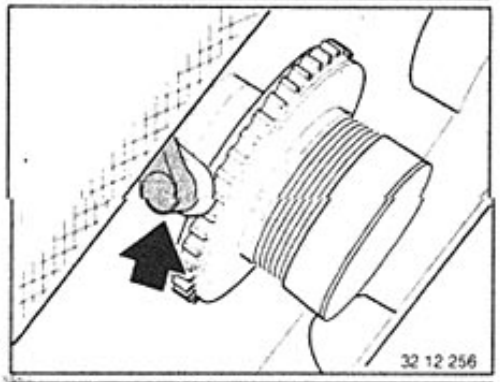

The impulse sensor is located beside the incremental gear.

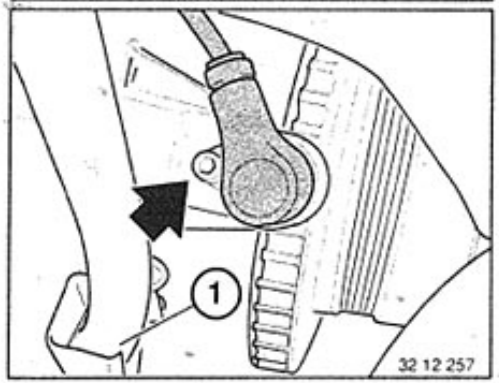

Unfasten screw (1).

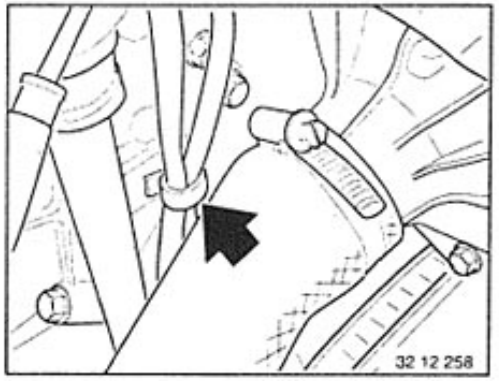

Note:
Observe pipe layout on the water pump.

12 14 500 Removing and installing / replacing both control units (Digital Motor Electronics) (M73)

Caution!
Note instructions for removal and installation of electronic control unit!
refer to General Data MG 12.

Switch off ignition.

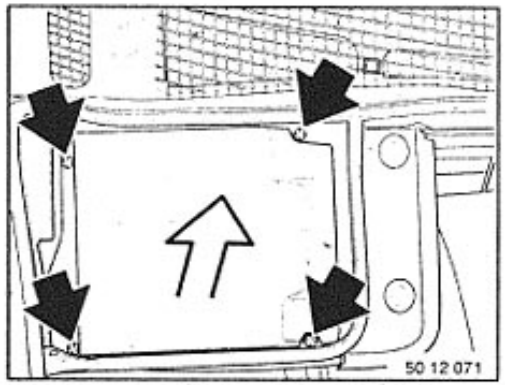

Unfasten screws.
Remove cover from control unit box.

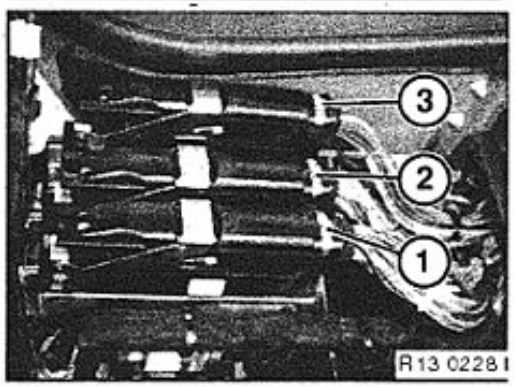

Control unit (1) for DME 1 (cylinder bank 1-6)
Control unit (2) for DME 2 (cylinder bank 7-12)
Control unit (3) for EPC (electronic engine power control)

12 14 518 Replacing impulse sensor (cylinder bank 7-12) (M73)

Refer to
Repair Instructions for 7 Series E38.

12 14 519 Replacing impulse sensor (cylinder bank 1-6) (M73)

Refer to
Repair Instructions for 7 Series E38.

12 14 525 Replacing sensor for cylinder recognition (camshaft sensor) (M73)

Refer to
Repair Instructions for 7 Series E38.

12 14 610 Replacing right knock sensor (cylinder bank 1-4) (M60)

Refer to
Repair Instructions for 5 Series E34.

12 14 611 Replacing left knock sensor (cylinder bank 5-8) (M60)

Refer to
Repair Instructions for 5 Series E34.

12 14 610 Replacing right knock sensor (cylinder bank 1-6) (M73)

Refer to
Repair Instructions for 7 Series E38.

12 14 611 Replacing left knock sensor (cylinder bank 7-12) (M73)

Refer to
Repair Instructions for 7 Series E38.

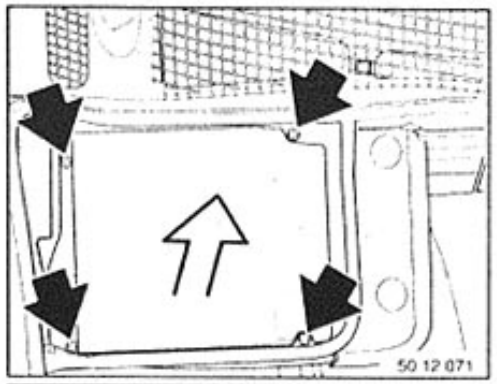

Relay / control units – allocation of engine wiring harness

Unfasten screws.
Remove cover.

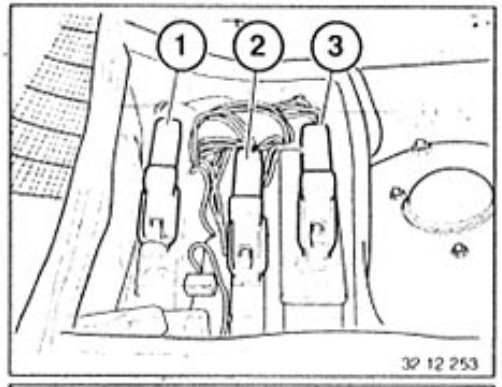

M 70, S 70:

1 Control unit for Digital Engine Control
2 Control unit for Digital Engine Control
3 Control unit for Electronic Power Control

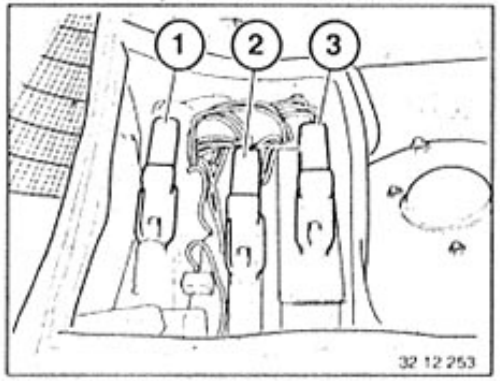

M 60:

1 Control unit for ABS
2 Control unit for Digital Engine Control
3 Control unit for automatic transmission

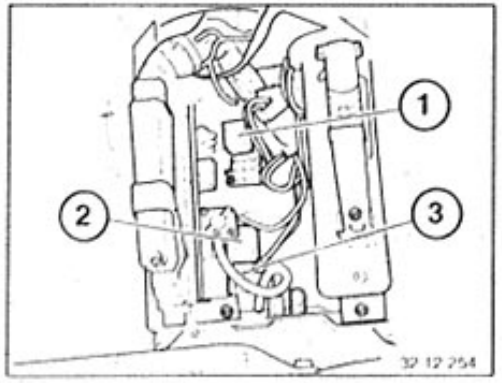

M 70, S 70:

1 Main relay for engine control unit
2 Relay for electric fuel pump
3 Relay for Lambda oxygen sensor heating

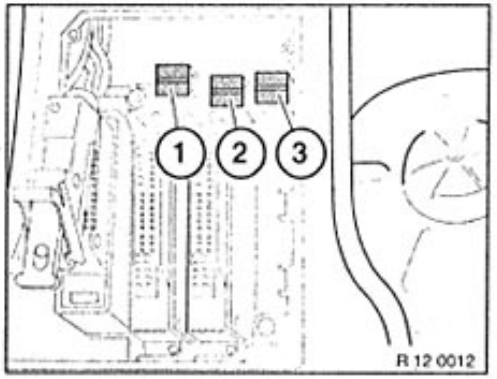

M 60:

1 Main relay for Digital Engine Control
2 Relay for electric fuel pump
3 Relay for Lambda oxygen sensor

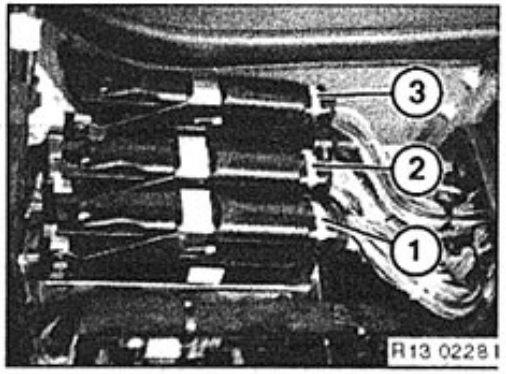

M 73:

1 Control unit for DME 1 (cylinder bank 1-6)
2 Control unit for DME 2 (cylinder bank 7-12)
3 Control unit for EPC (electronic engine power control)

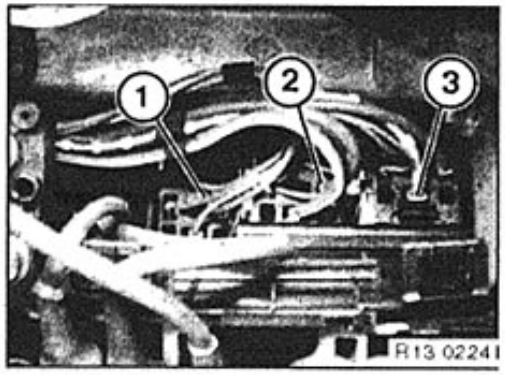

M 73:

1 Relay for electric fuel pump
2 Main relay for DME 1
3 Main relay for DME 2

Caution!
Depending on the construction status of the vehicle, the installation location of relays and control units may vary. In the event of any doubts, test by pulling the relevant relay whether the corresponding function is interrupted.

For additional instructions on troubleshooting, refer to Electrical Troubleshooting Manual for 8 Series.

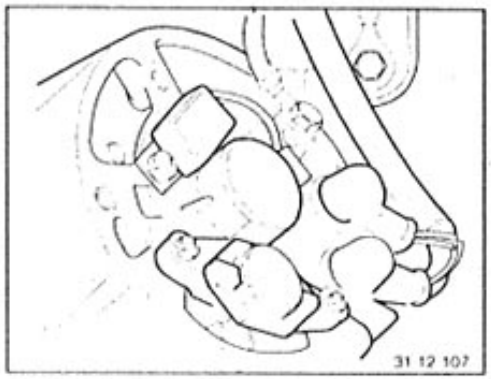

12 31 009 Checking 3-phase alternator and voltage regulator

Prerequisite for this inspection:

- Correct connections on the charged battery
- Correct connections on alternator and starter motor
- Good ground connection between engine and body
- Tensioned Vee belt

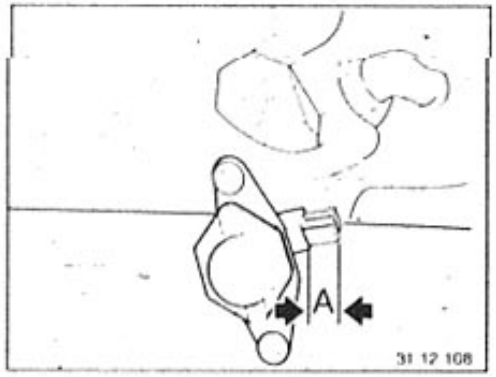

If the charge indicator lamp is lit continuously:
Remove voltage regulator and check carbon brushes, replacing if necessary 12 31 200.
Minimum length "A" 5 mm.

Caution!

There are alternators with normal regulators and alternators with constant voltage regulators.
These regulators are encoded mechanically and must not be confused with one another!

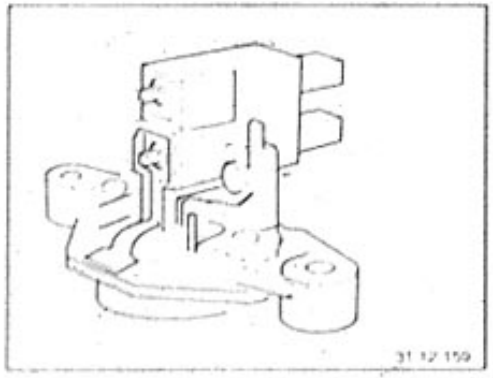

Normal regulator

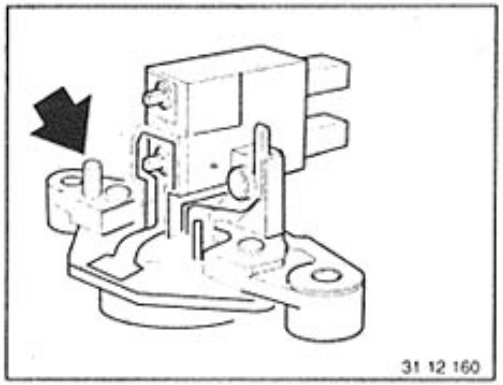

Constant voltage regulator
Can be identified by the mechanical encoding.

The constant voltage regulator must never be installed in vehicles whose battery is in the engine compartment. This would result in damage to the battery.

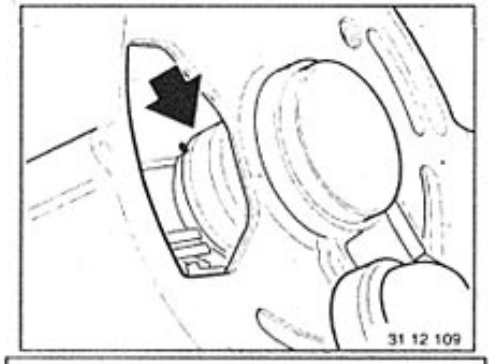

Installation:
Check slip rings for signs of wear. Line grind if necessary and polish.
Connect up BMW SERVICE TESTER.
Switch on engine and compare measuring values with nominal values.

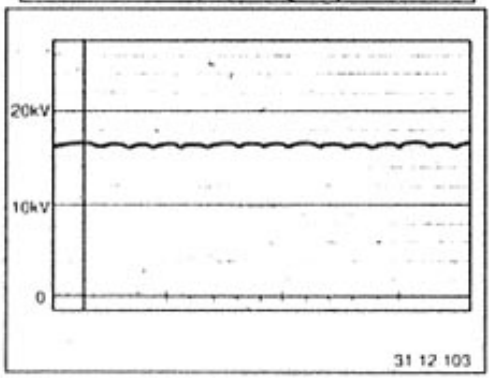

If the charge indicator light goes out while the engine is running and the control voltage* is not reached and the oscillogram is OK (as per illustration), the voltage regulator must be replaced 12 32 000.
For additional oscillograms, refer to Electrical Troubleshooting Manual for the 7 Series.

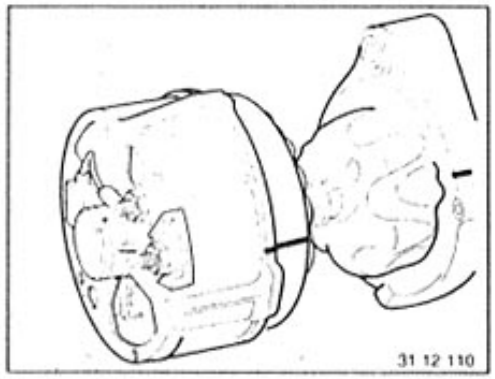

If the specified charge current is not achieved, remove the alternator, dismantle it and inspect the components.
For additional troubleshooting and notes on dismantling the alternator, refer to Construction Group Repair Instructions, Group 12.

* Refer to Technical Data

12 31 020 Removing and installing or replacing 3-phase alternator (M 70, S 70)

Disconnect ground leads from the batteries.

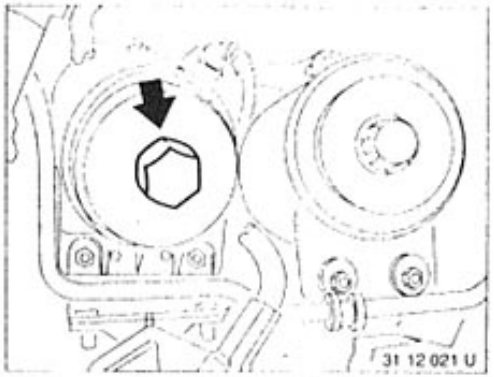

Unfasten cover from oil filter to enable engine oil to flow back into the oil pan.

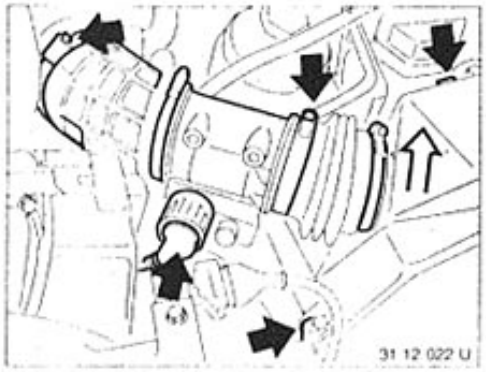

Remove complete upper section of suction filter housing together with mass air flow sensor.
Unfasten clips.
Unfasten hose clip.

Remove cover from ignition coil.
Unscrew nuts and remove leads.

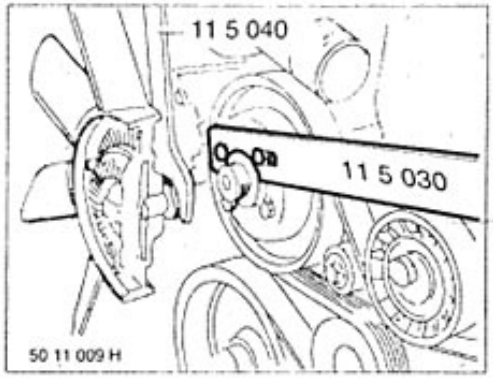

Remove viscous fan.

Unfasten hose clip from cooling air hose on alternator.

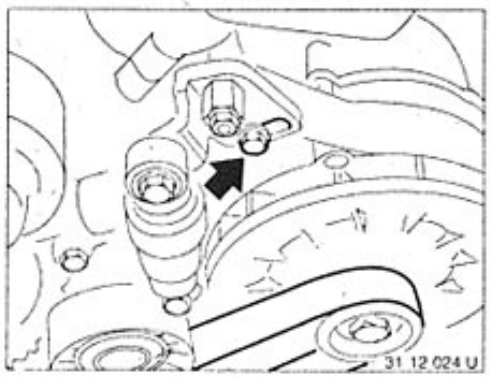

Unfasten clamping fixture for toothed Vee belts.
Remove nut from clamping fixture.
Unfasten screw.

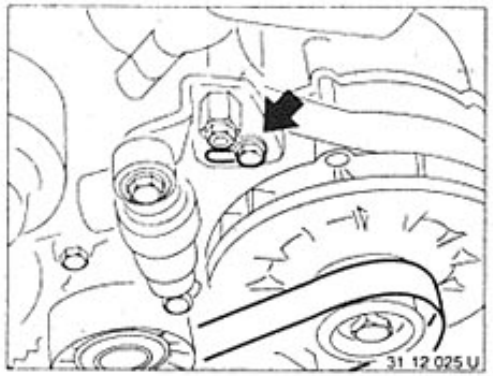

Unfasten top screw on alternator mount.
Remove toothed Vee belt.

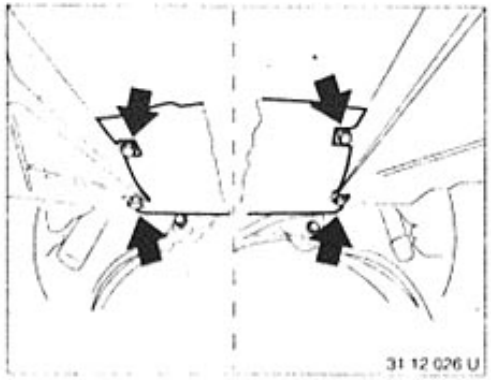

Unscrew splash guard.

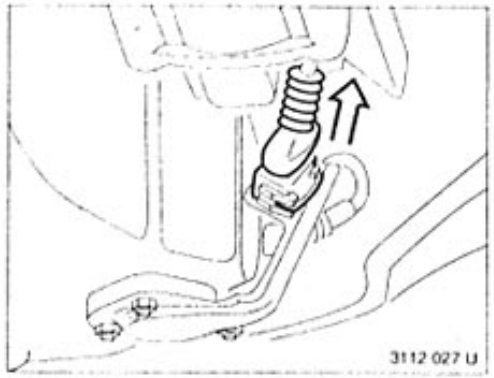

Pull off plug on oil level sender.

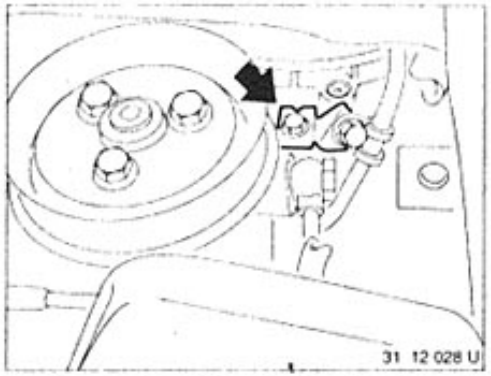

Unscrew hydraulic pipe holder on alternator.

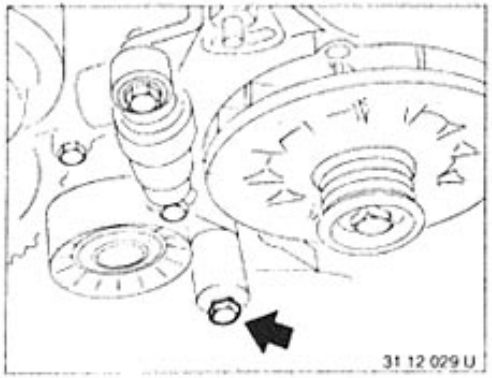

Loosen bottom tensioner bolt from underside of car.
Remove tensioner downward.
Unscrew cooling air hose on alternator.

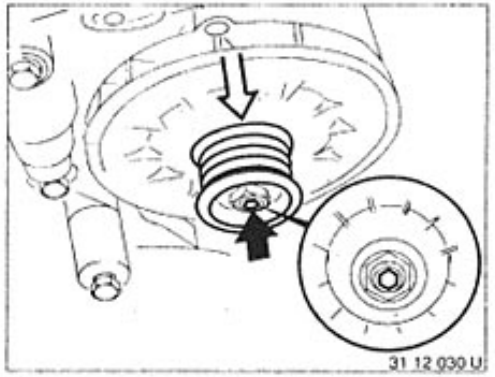

Unscrew pulley and fan from underside of car.
Unscrew both bottom bolts of alternator.

Installation:
Tightening torque*.

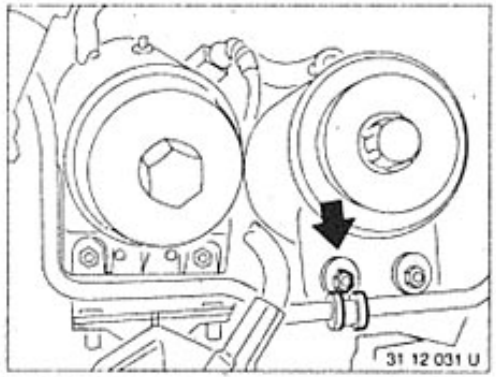

Unscrew upper hydraulic pipe holder.

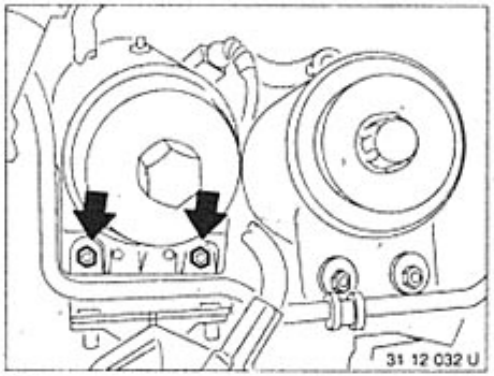

Remove complete full flow oil filter.

Installation:
Molded hoses on the oil filter impair removal and installation.
Install molded hoses straight.
Replace gaskets.
Check for correct seating of O-rings.

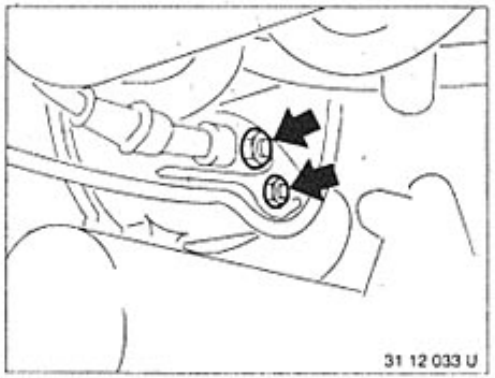

Unscrew pipes of alternator.

* See Specifications

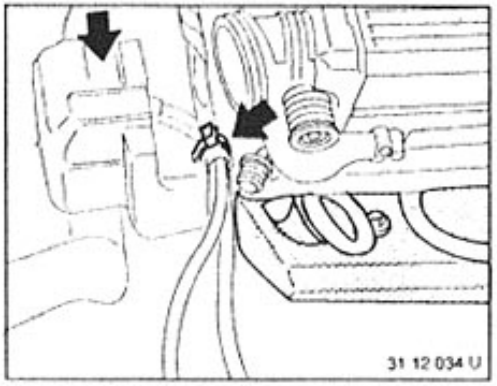

Remove cover of distributor and loosen the wire strap.

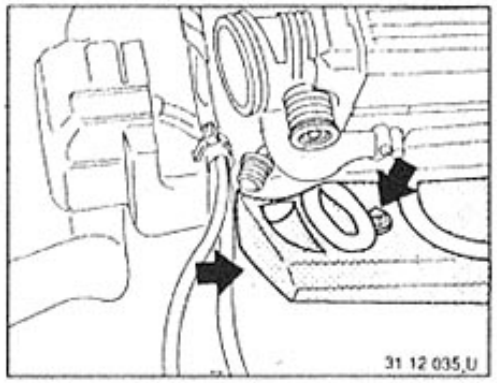

Unscrew screws.
Remove heat shield.

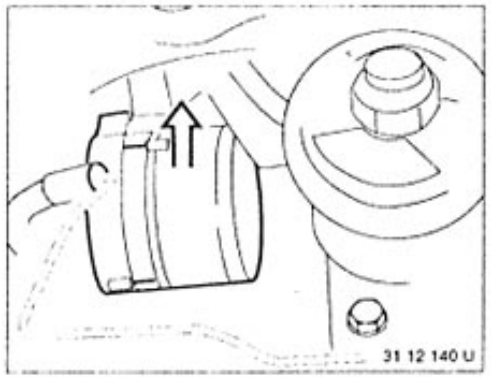

Remove alternator upwards approximately in installed position.
Press hydraulic pipe aside.

Installation:
Install alternator without pulley approximately in installed position from above, connect wires on alternator, install upper bolt, mount the pulley and then continue from the underside of the vehicle.

Check engine oil level and add engine oil if necessary.

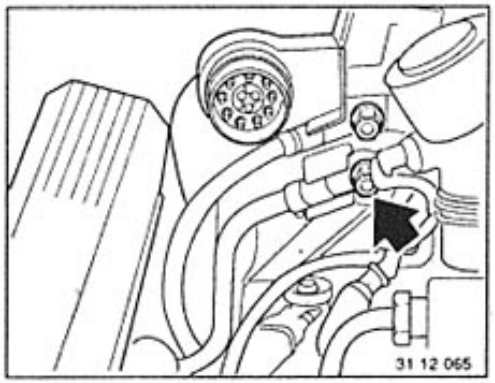

Routing of Alternator Wires:
Firewall connection at driver's side.

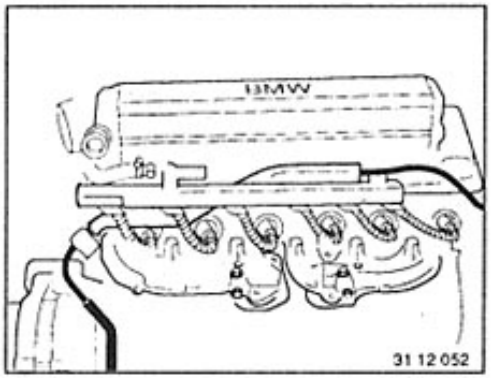

Routing of wires on engine.

12 31 020 Removing and installing or replacing 3-phase alternator (M 60)

Interrogate fault memories of control units since the fault memories of certain control units are cancelled when the battery is disconnected.
Note General Instructions on Page 12-0!
Disconnect ground lead from battery.

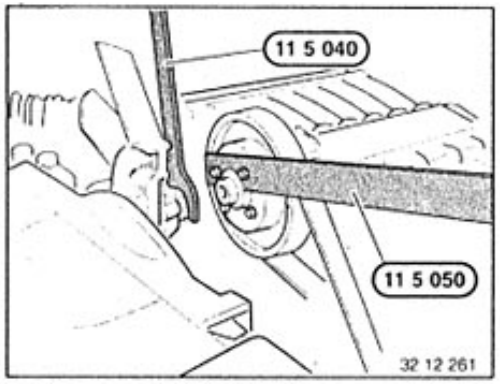

Remove fan wheel.
Unfasten fan connection with special tool 11 5 040 and counter support 11 5 050 for pulley wheel.
Tightening torque 11 52 1AZ*

Caution!
Counterclockwise thread!

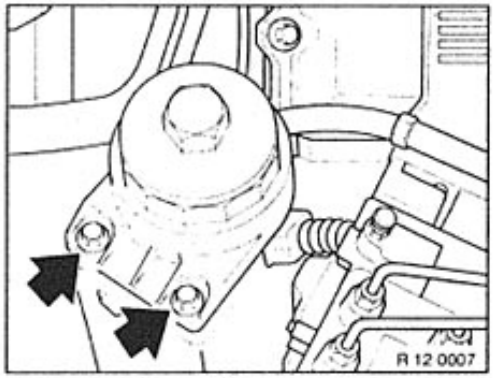

Unfasten screws and remove from bracket.

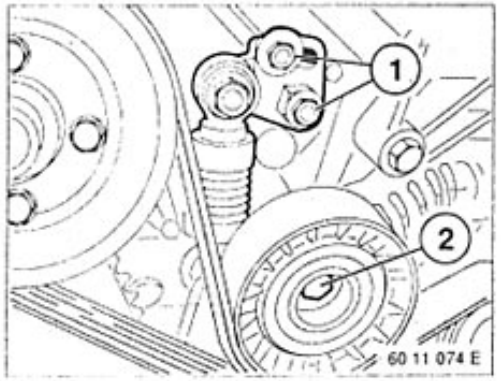

Unfasten nuts (1) and (2) and remove Vee belt tensioning fixture.

* Refer to Technical Data

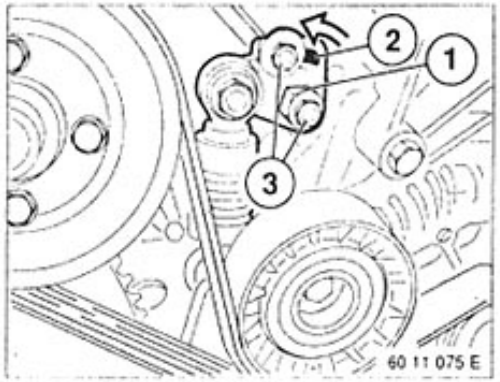

Installation:
Use hex head (1) to preload adjusting plate up to end of long bore (2), then tighten nuts (3).

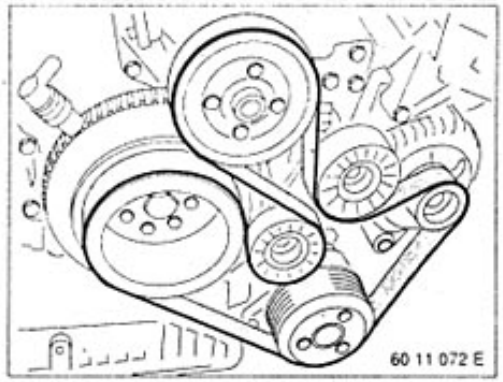

Installation:
Check toothed Vee belts for coolant and oil residue and replace if contaminated.
Fit toothed Vee belt and ensure that Vee belt and pulley wheel are located correctly.

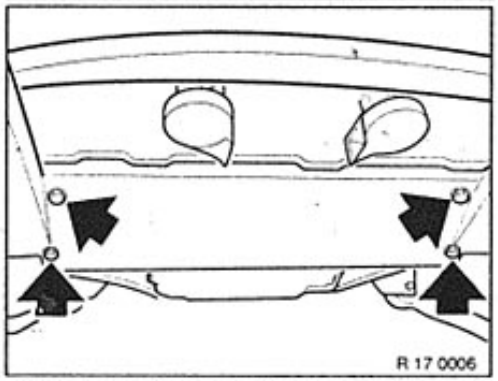

Unfasten screws.
Remove underbody protection from engine

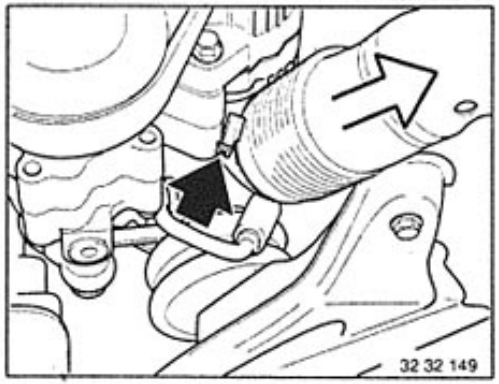

Remove alternator ventilation hose from alternator.

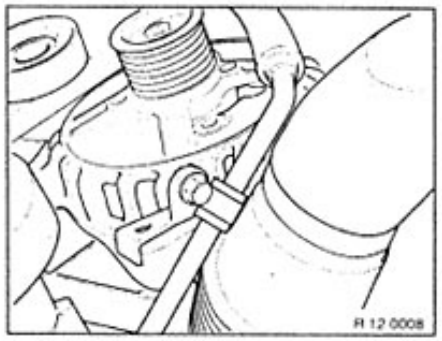

Unfasten retaining screw in alternatory hydraulic line.

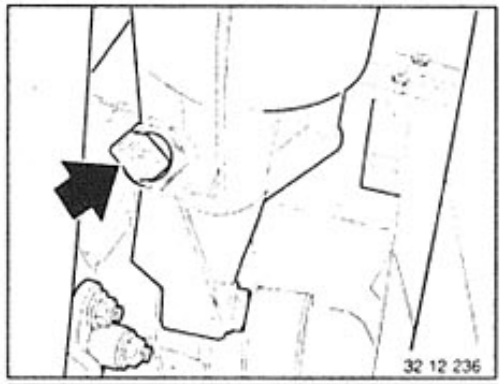

Disconnect plug connection from oil pressure switch.
Unfasten cable connector.

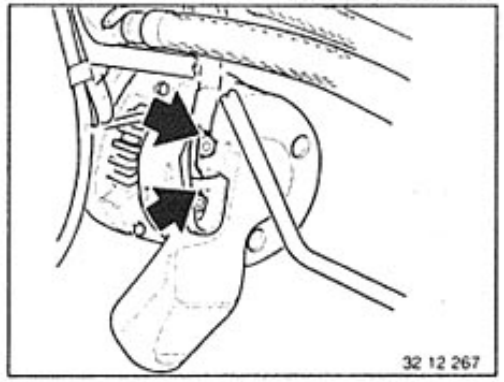

Unfasten lines on alternator.
Tightening torque 12 31 1AZ*

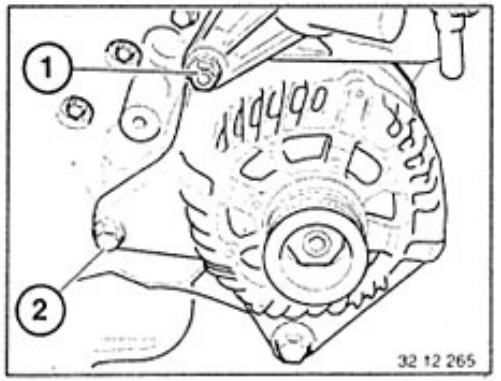

Unfasten retaining screws (1) and (2) on the alternator.

* Refer to Technical Data

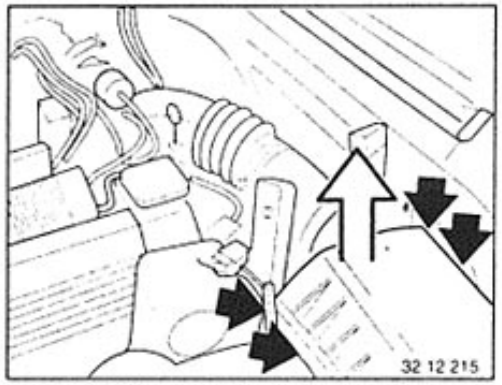

Remove upper section of suction filter with mass air flow sensor.

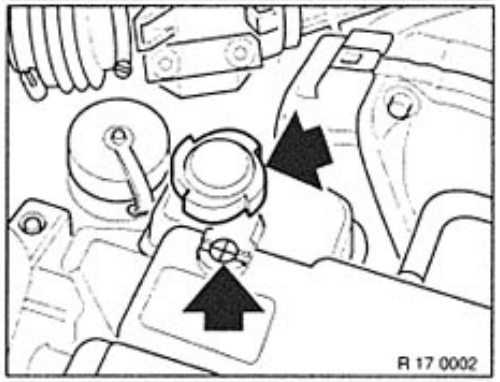

Caution!
Only unscrew sealing cover once engine has cooled down.

Installation:
Top up with specified coolant and bleed the cooling system, see 17 00 039.

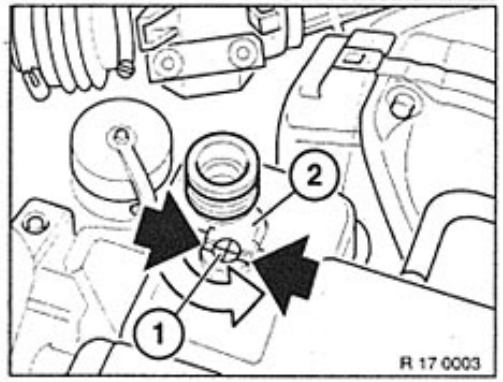

Unscrew complete vent screw (1), unfasten retainer (2) and remove.

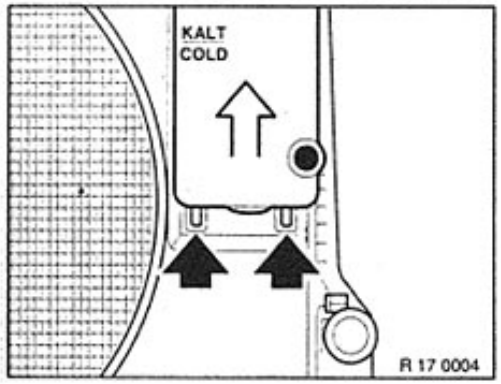

Remove expansion tank by lifting upwards

Installation:
Expansion tank must engage in radiator shroud.

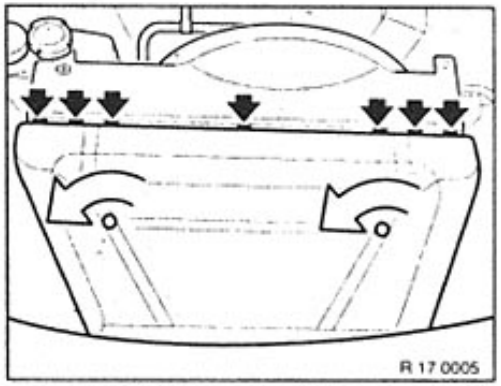

Unfasten upper section of air duct and unclip with screwdriver at specified points (arrows).

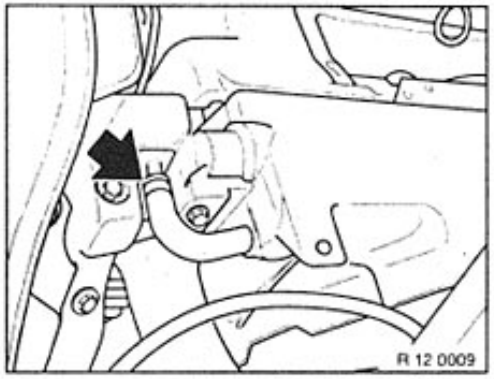

Unfasten overflow line from expansion tank.

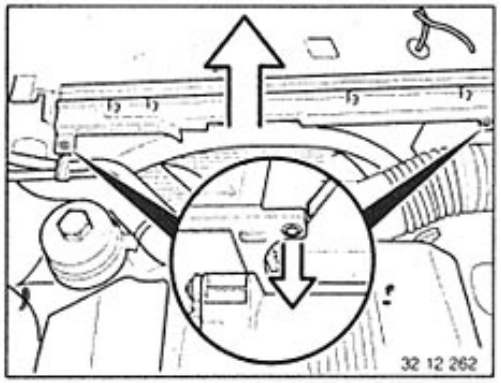

Remove clips on left and right sides.
Remove overflow line from fan shroud.
Remove fan shroud by lifting upwards.

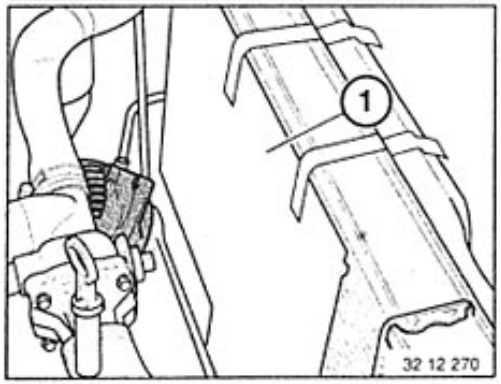

Protect radiator and sheet metal plate (1) from damage.

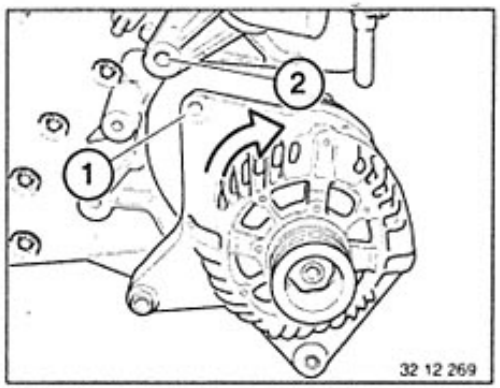

Pull alternator forwards.

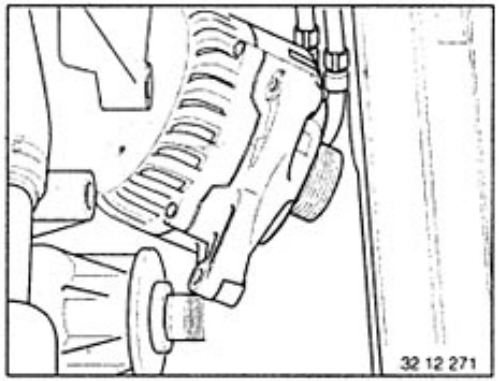

Remove alternator by lifting upwards.

Caution!
Do not damage cable for actuating throttle valve for ASC+T!

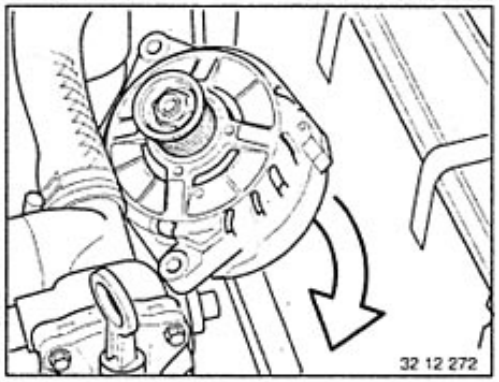

12 31 020 Removing and installing or replacing alternator (M73)

Observe notes on disconnecting and connecting battery, refer to General Data MG 12.

Switch off ignition.
Disconnect battery ground wires.

Remove alternator drive belt,
refer to 11 28 010.

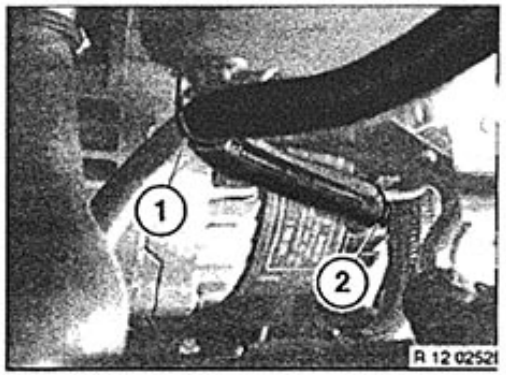

Unfasten cable ties (1 and 2) on cover of distributor cap.

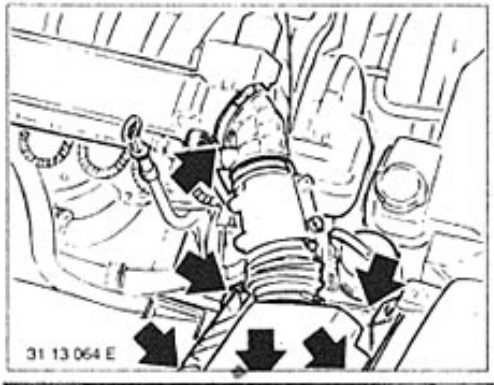

Remove upper section of intake filter housing with mass air flow sensor.

Unfasten connections on alternator.

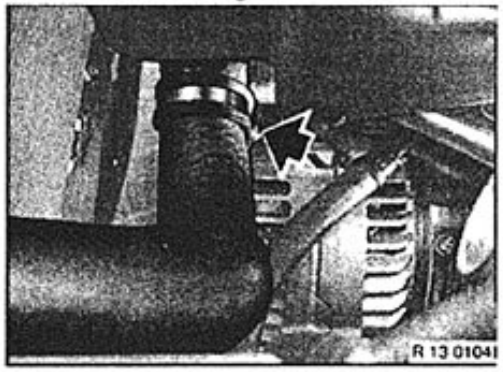

Remove bracket for coolant hose.

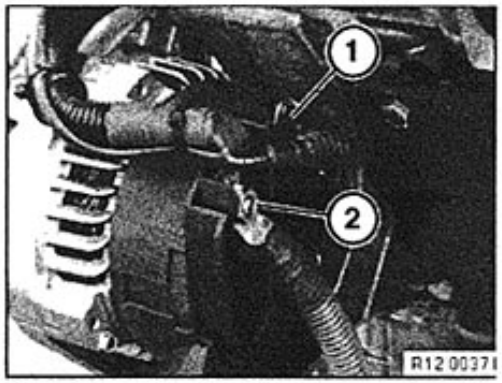

Connections illustrated here on removed alternator.

Disconnect plug connection (1).
Unfasten nut (2).

Installation:
Tightening torque,
refer to Technical Data 12 31 1AZ.

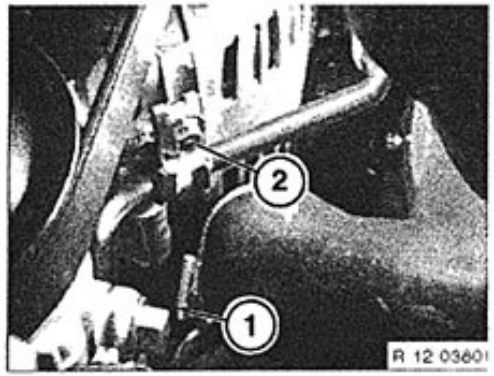

Unfasten hose clip (1) and remove cooling air hose. Unfasten screw in retaining clip (2) on hydraulic line and remove retaining clip.

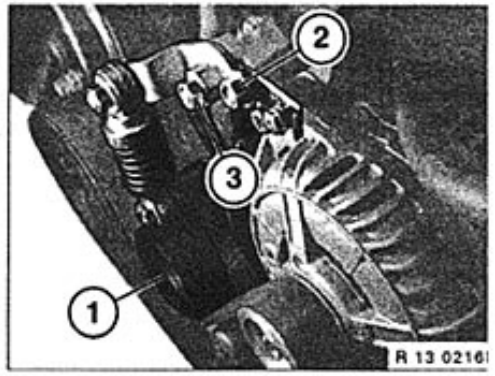

Unfasten screws (1 to 3). Remove tensioning roller for ribbed yee belt.

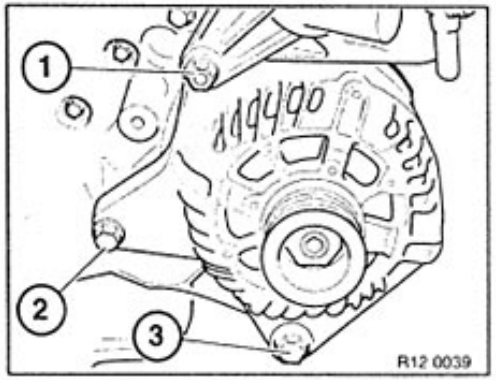

Unfasten screws (1 to 3).

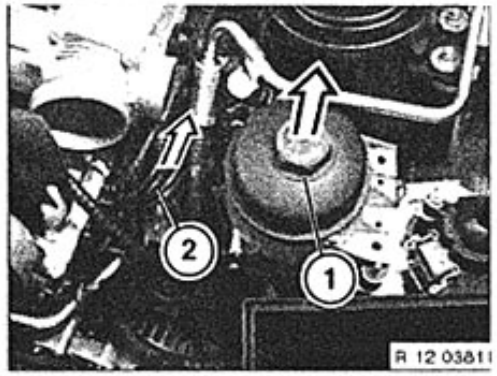

Unfasten oil filter screw connection on bracket and place oil filter to one side.
Mark sequence of ignition leads on the distributor cap and remove ignition leads from the distributor cap.
Place ignition leads (2) to one side.
Remove distributor cap,
refer to 12 11 096.

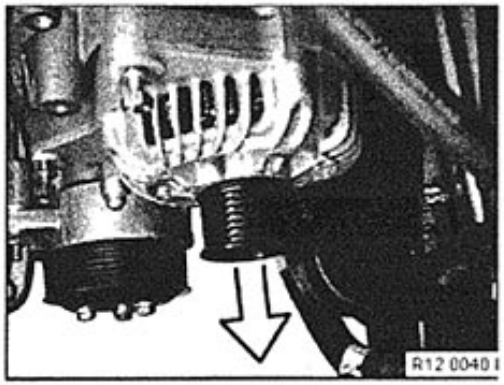

Pull out alternator.

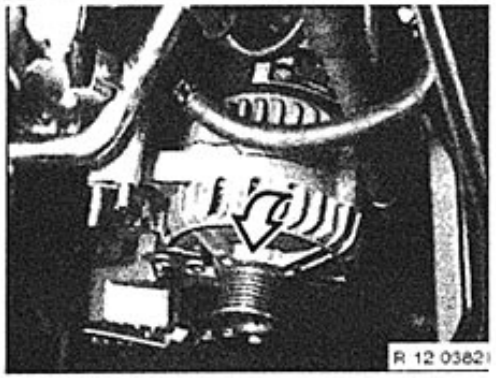

Screw alternator into radiator shroud. Remove alternator by lifting upwards.

Caution!
Avoid damage to radiator fins!

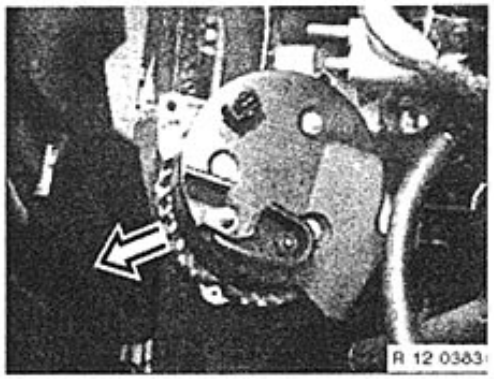

Installation:
First insert alternator in radiator shroud with pulley wheel.

Caution!
Do not damage radiator fins!

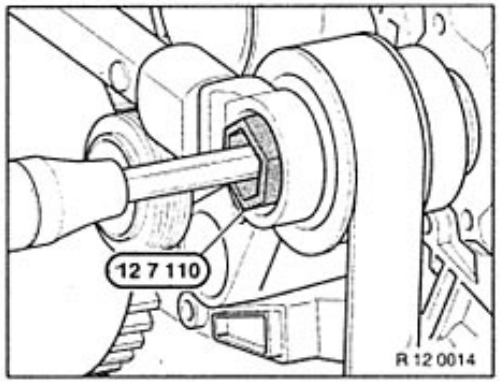

Replace alternator pulley:

Unfasten nut with special tool 12 7 110, bracing alternator shaft with internal hex wrench or internally-splined wrench.

Installation:
Tightening torque,
refer to Technical Data 12 31 3AZ.

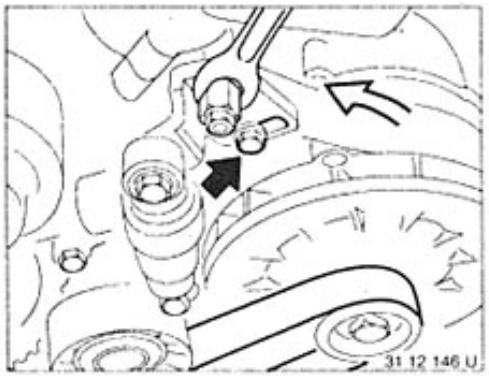

12 31. . . Tension vee-belt

Tension clamping fixture using open-end wrench until screw in long slot is firmly abutted.
Tighten screw.
At this point, hydraulic belt tensioner is O.K.

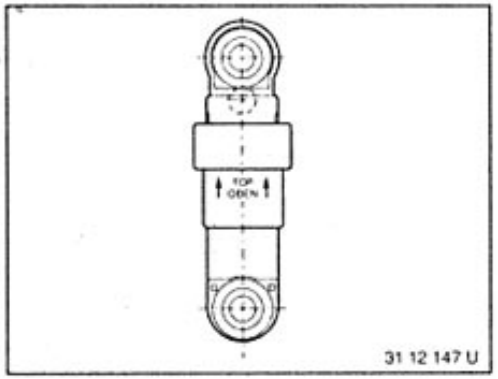

Note:
The hydraulic belt tensioner is filled with oil: always store removed elements horizontally. Incorrectly mounted elements can usually be bled by compressing several times in succession.

12 31 030 Removing and installing or replacing auxiliary alternator

Note General Data Gr. 61 00.
Unfasten battery ground wire.
Installation:
Below the air conditioning compressor.
Unfasten ground strap from engine support.
Remove splash guard from below engine.

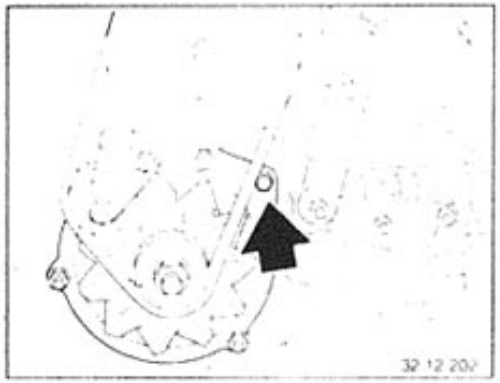

Unfasten retaining screws.

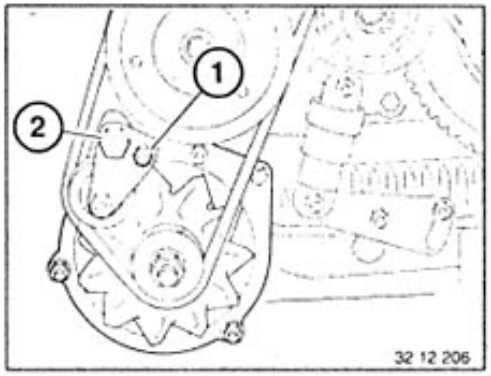

Loosen tensioning roller.
Remove Vee belt.

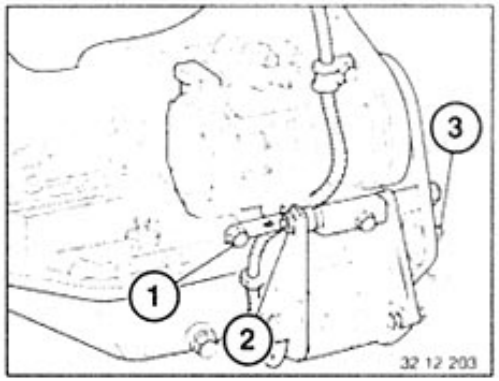

Unfasten retaining screws.
Pull complete alternator downwards to remove.

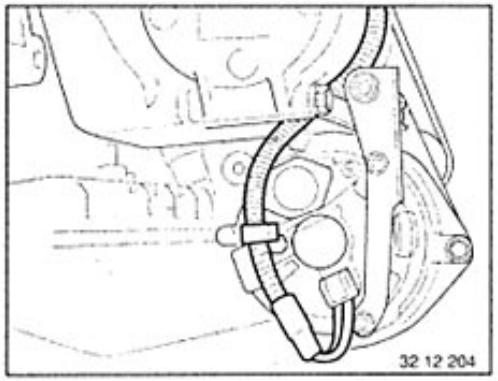

Unfasten retaining screws on lines.
Remove connector.
Remove lines.

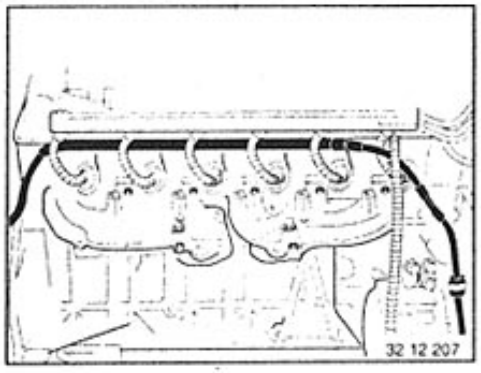

Line routing below ignition leads on cylinders 1...6.

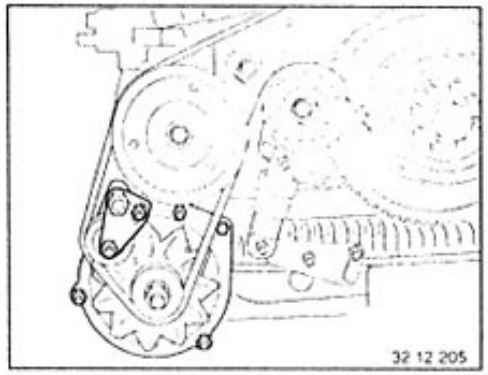

12 31 . . . Tension vee-belt for auxiliary alternator

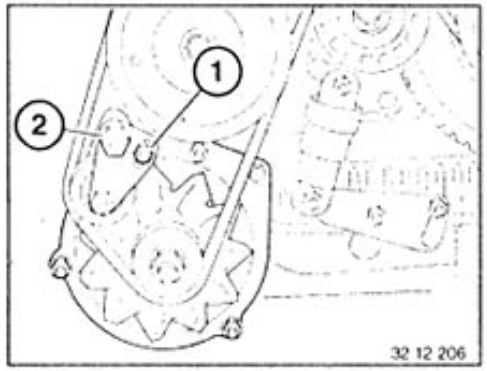

Unfasten screws (1) and (2).
Twist outside hex head (2) on bracket of tensioning roller to 10 Nm and secure with screws (1) and (2). Vee belt is then at correct tension (preload).

12 31 230 Removing and installing / replacing bearing block on alternator (M73)

Refer to,
Repair Instructions for 7 Series E38.

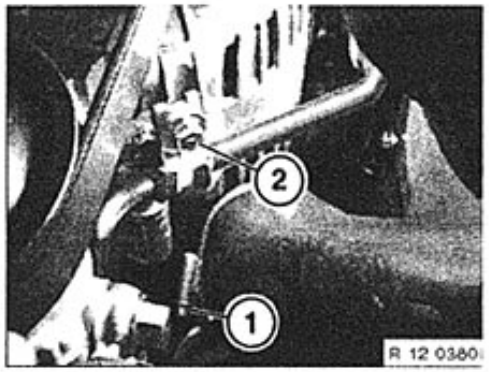

12 31 400 Replacing cooling air guide on alternator (M73)

Unfasten hose clip (1) and remove cooling air guide from alternator. Unclip cooling air guide from brake air duct and remove.

12 32 000 Removing and installing or replacing regulator switch

Disconnect ground wires from battery.

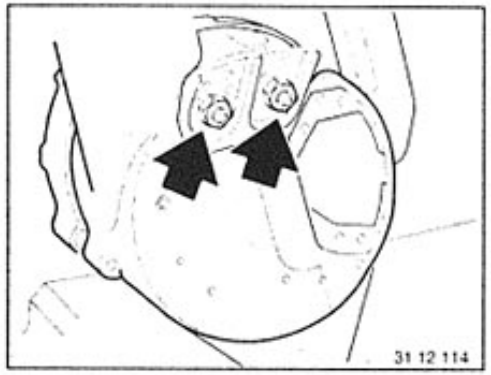

Remove 3-phase alternator, refer to 12 31 020.
Remove cover.

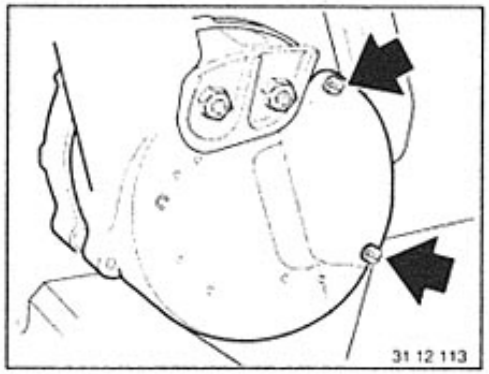

Unfasten screws.
Remove voltage regulator.

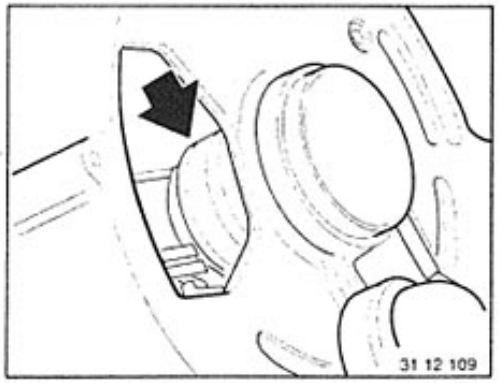

Check slip ring for wear and rework if necessary, refer to Construction Group Repair Manual 12 31 200.

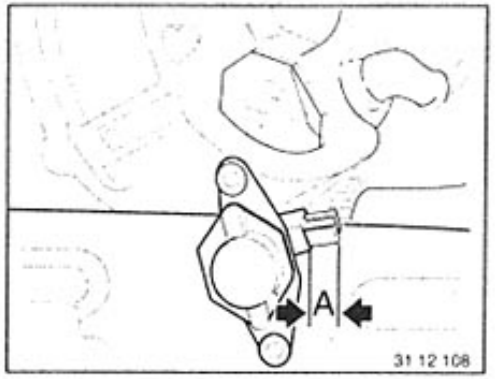

Installation:
Clean contact faces and check preload on contact springs, bending again if necessary.

12 32 501 Replacing regulator switch for alternator (M73)

Refer to
Repair Instructions for 7 Series E38.

12 41 020 Removing and installing or replacing starter motor (M 70, S 70)

Interrogate fault memory.
Remove battery ground leads
Unless otherwise stated, the same operations apply to both automatic and manual transmissions.

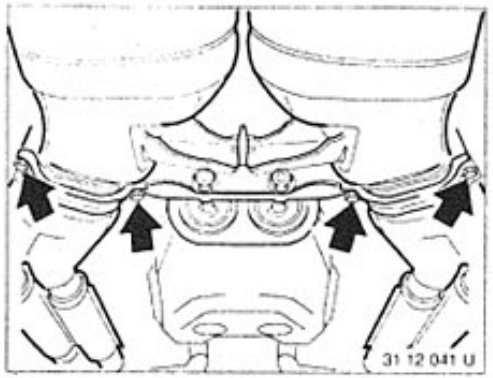

Unfasten exhaust system from transmission bracket, loosen intermediate rubber mount and remove complete exhaust system.

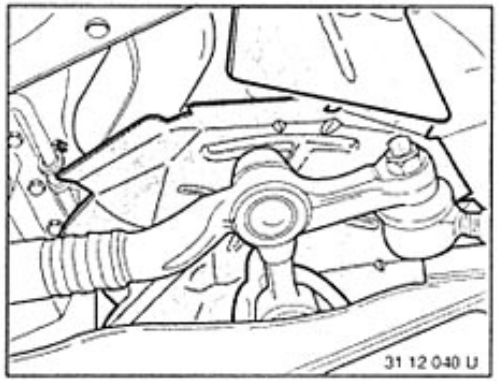

Remove heat shield from pivot lever.

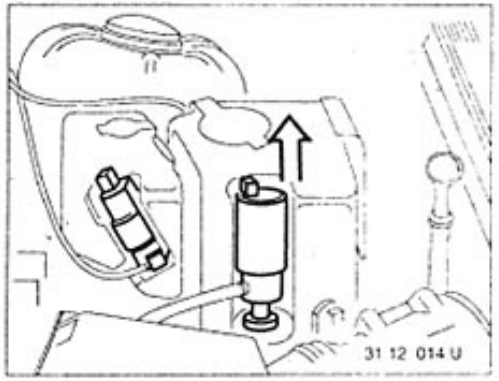

Empty water container for SRA, remove pump and place to one side.

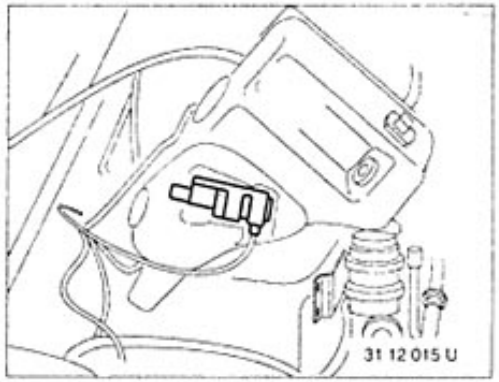

Place container to one side.

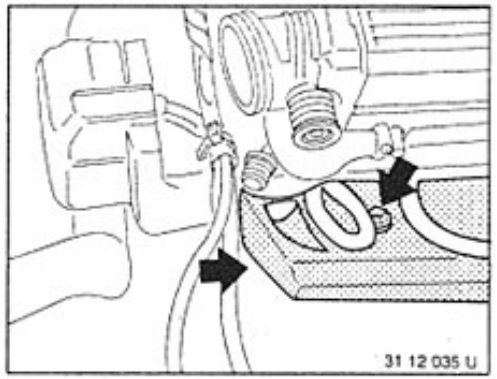

Remove heat shield from intake manifold.
Remove leads from starter support point.
Tightening torque 12 41 4AZ*

Remove hoses from manifold
First remove the front tube, then the rear tube by lifting upwards.
Observe assembly instructions for Group 18.

Automatic transmission:
Extend the tool.

* Refer to Technical Data

Automatic transmission:
Unfasten the upper starter retaining screw.
Install tool between firewall and wiring harness of E box from above.

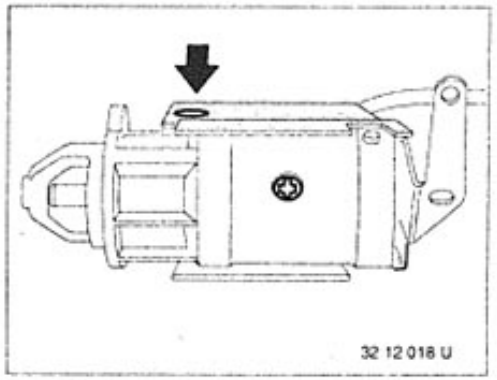

Remove starter motor by pulling downwards.
Remove heat shield.
Remove bracket.

Unfasten upper starter screw.
Remove screws from above (direction of manifold).

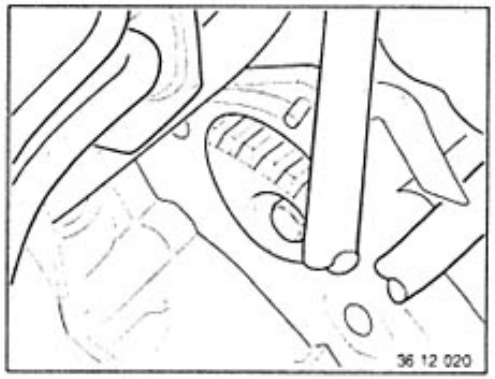

Check pinion of starter motor and starter gear ring on flywheel for signs of damage.

Note:
For additional troubleshooting notes and instructions on dismantling the starter motor, see Construction Group Repair Instructions for Group 12.

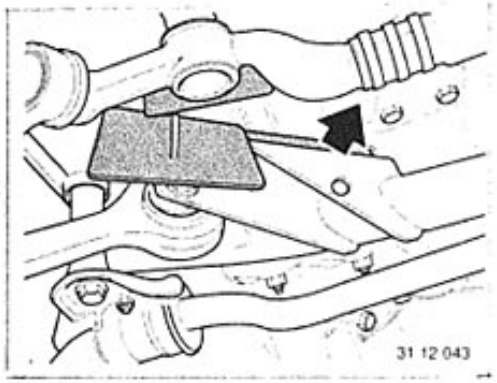

Manual transmission:
Unfasten upper starter screw from underside of vehicle.

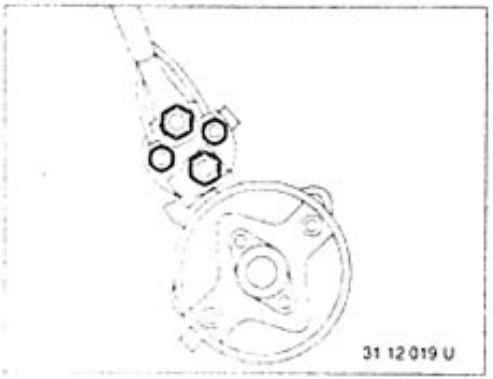

Installation:
Note correct position when installing the starter lead, otherwise it is not possible to install the heat shield.

First insert front tube from below.
Note installation location of screws and springs. For subsequent procedure, see Group 18.

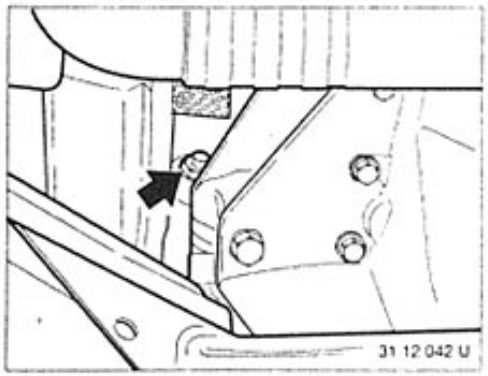

Unfasten bracket from engine mount.
Unfasten screw from underside of starter motor.

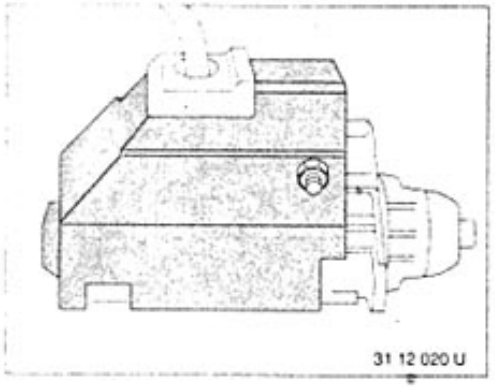

12 41 020 Removing and installing or replacing starter motor (M 60)

Note General Information for Group 12-0.
Disconnect battery ground lead.

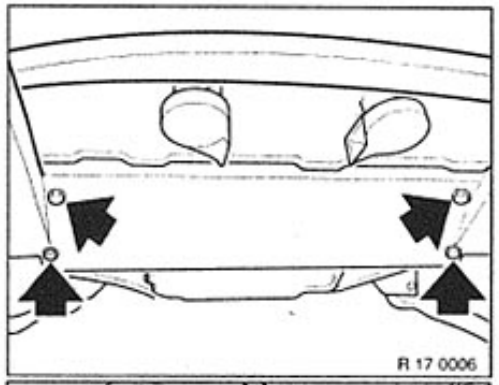

Remove underbody protection for assemblies.

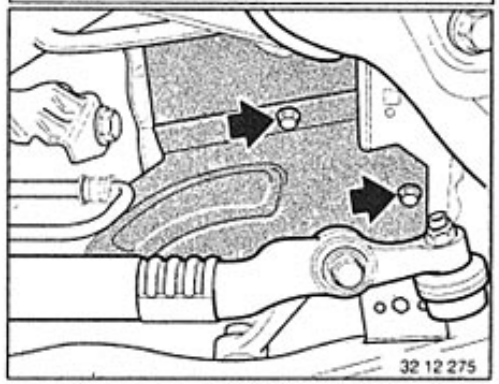

Remove right heat shield.
Unfasten screws.

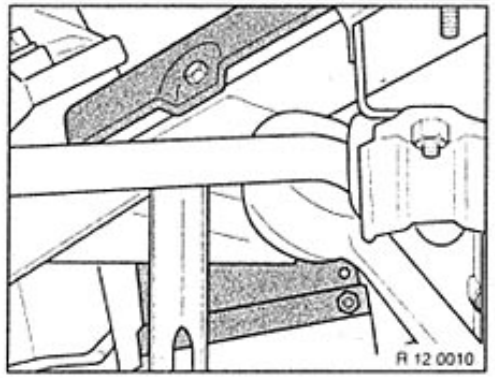

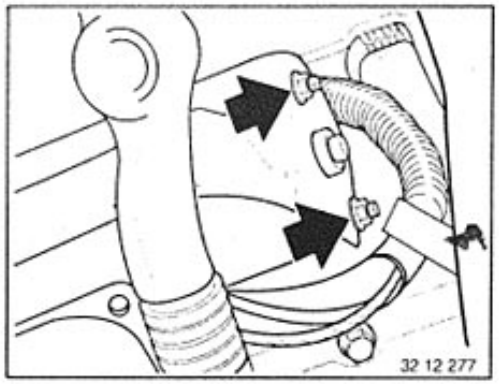

Unfasten screws.

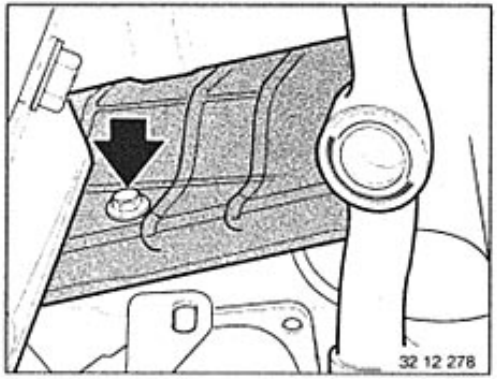

Unfasten screw.
Remove heat shield from starter motor.

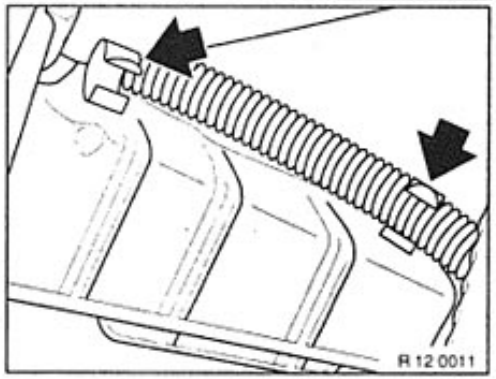

Unclip starter lead from heat shield.

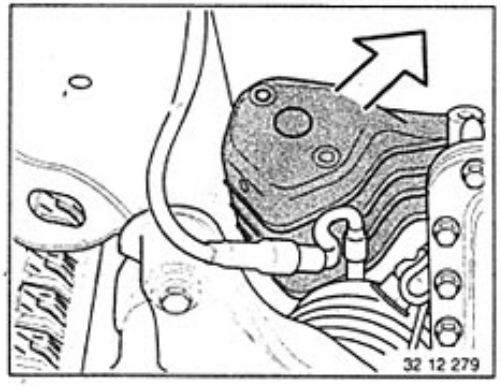

Remove heat shield from below between front axle carrier and reinforcement cross.

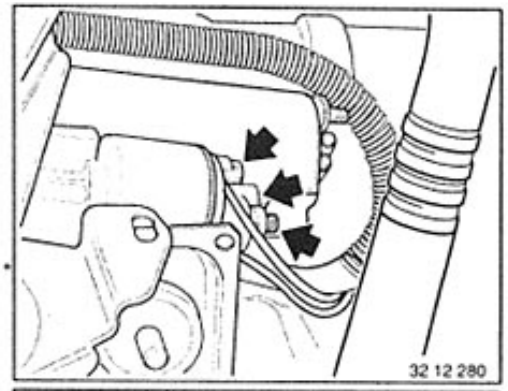

Unfasten screw connection for starter motor lead.
Tightening torque 12 41 4AZ*

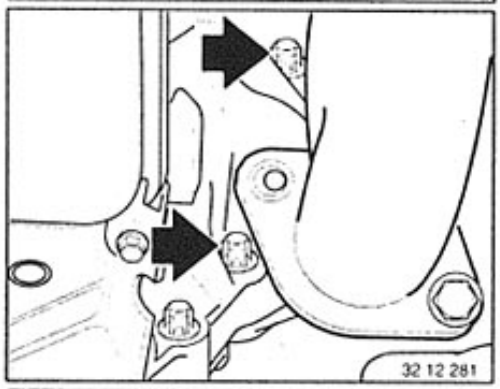

Unfasten screws.
Tightening torque 12 41 1AZ*

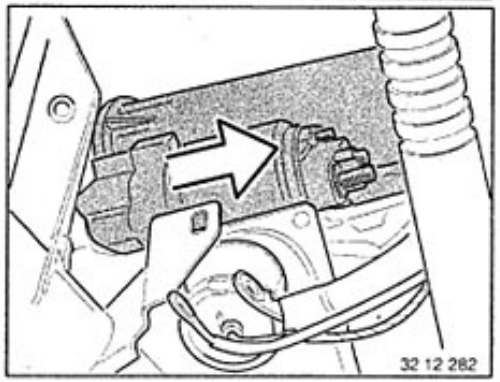

Remove starter motor from gear ring.

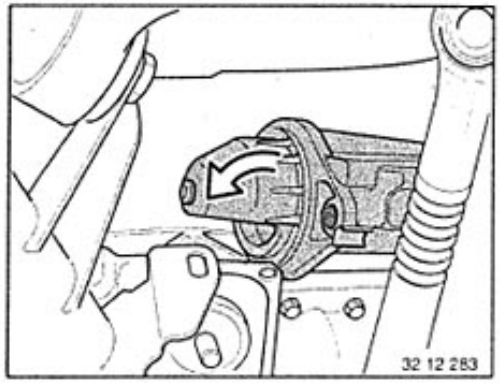

Remove starter motor from below between front axle carrier and reinforcement cross.

* Refer to Technical Data

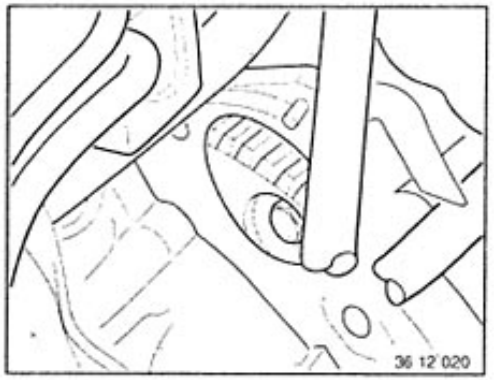

Check starter motor pinion and starter gear ring on flywheel for signs of damage.

Note:
For additional troubleshooting notes and instructions on dismantling the starter motor, see Construction Group Repair Instructions, Group 12.

12 41 020 Removing and installing or replacing starter motor (M73)

Follow instructions on disconnecting and connecting battery, refer to General Data MG 12.

Switch off ignition.

Disconnect battery ground leads.

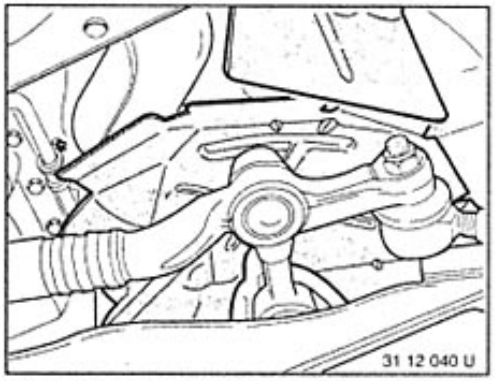

Remove heat baffle plate.

Remove right exhaust pipes.

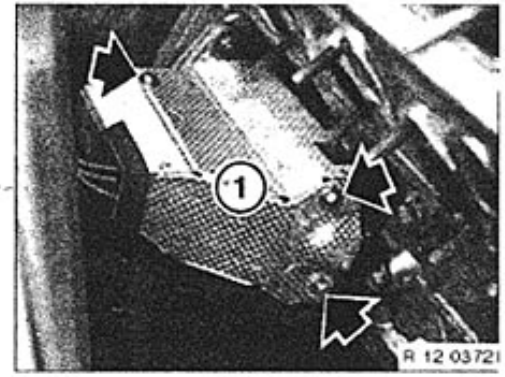

Unfasten top screw and back screw from heat baffle plate on starter motor (illustrated here from above).

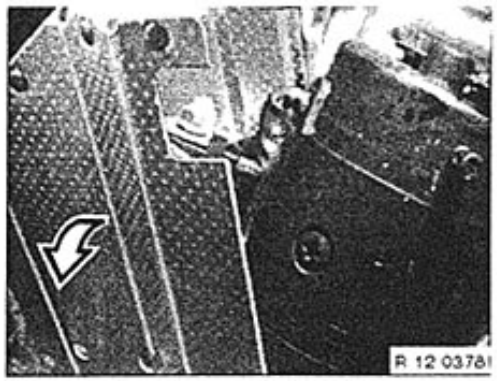

Unfasten lower screw in heat baffle plate and swivel heat baffle plate to one side.

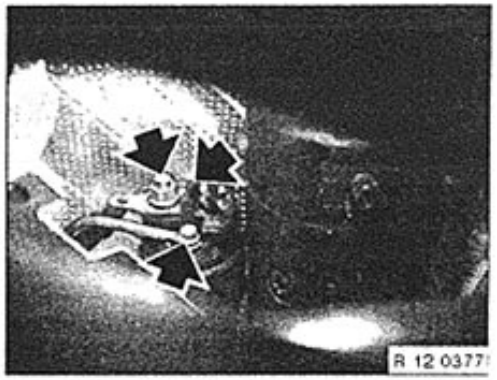

Unfasten connections on starter motor.

Installation:
Tightening torque,
refer to Technical Data 12 41 4AZ

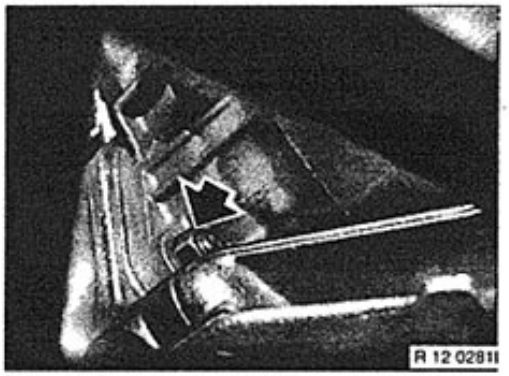

Unfasten top and lower nuts on starter motor.

Installation:
Tightening torque,
refer to Technical Data 12 41 1AZ

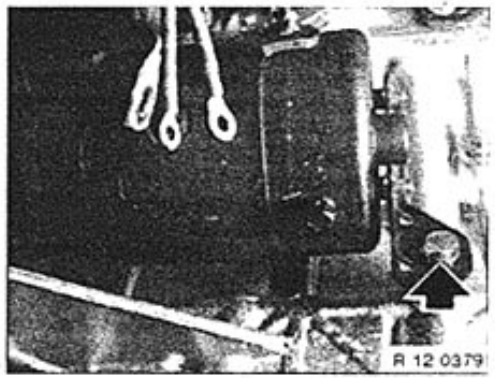

Support bracket on crankcase: unfasten screw. Remove support bracket.
Remove starter motor from transmission mount.

Installation:
Check starter pinion for damage.
Check starter crown wheel on flywheel for signs of damage.

Note:
A troubleshooting operation on starter motor and its peripherals is described in Construction Group Repair Instructions MG 12.

12 41 041 Replacing engagement magnet switch

Refer to
Repair Instructions for 3 Series E36.

12 41 103 Dismantling and assembling starter motor

Refer to
Repair Instructions for 3 Series E36.

12 41 551 Replacing carbon brushes on starter motor

Refer to
Repair Instructions for 3 Series E36.

12 70 000 Function check of Electronic Engine Power Control (EML) (M73)

Connect up DIS and interrogate fault memory.

Note:
After each time the accelerator sensor is disconnected, perform a basic adaptation check of accelerator sensor. Procedure in accordance with DIS instruction.

12 70 500 Checking safety path of Electronic Engine Power Control (EML) (M70)

Note:
Before fitting test adapter to EML – interrogate fault memory.

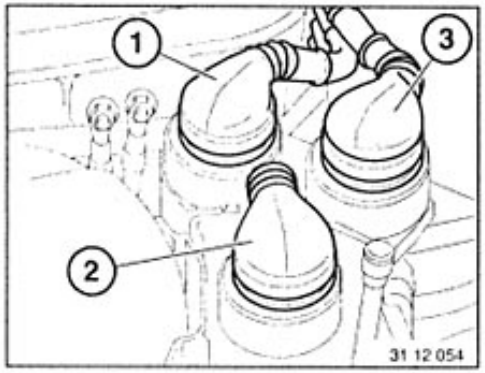

1 = Plug connection DME 1
2 = Plug connection DME 2
3 = EML plug connection

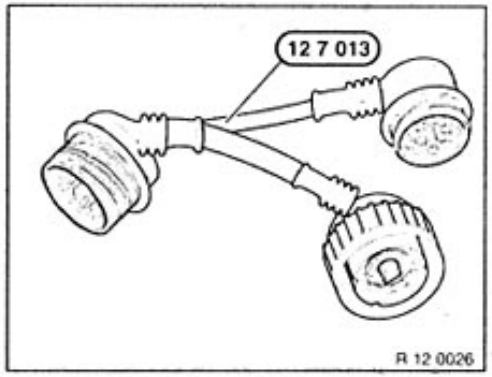

Switch off ignition. Unfasten EML plug connection.
Fit test adapter 12 7 013.

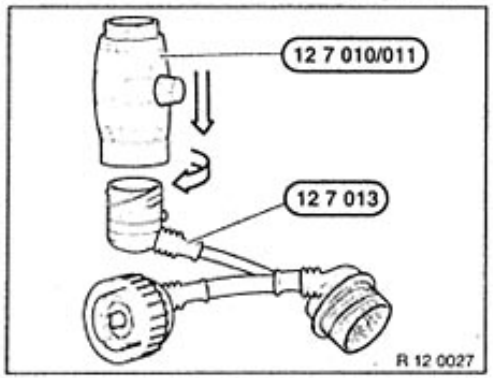

Connect test adapter 12 7 013 to test adapter 12 7 010/011.
Connect BMW Service Tester (to measure engine speed).

Test sequence:
Regulate test adapter 127 010/011 in center position "-".
Disconnect gear (idle setting).
Start engine.
Govern idle speed to approx. 2000 rpm with the knurled knob on the test adapter.
Then depress footbrake immediately.
The engine speed must fall to idle speed "immediately".
If this happens, the safety path is OK.
On vehicles with a manual transmission, repeat the test with the clutch pedal.

For notes on troubleshooting, see Electrical Troubleshooting Manual.

Switch off ignition.
Remove adapter.
Reinstall connector.

Note:
Interrogate fault memory.
Check faults in memory and rectify them.
Cancel fault memory.

12 71 530 Replacing control unit for Electronic Engine Power Control (EML)(M70)

Note instructions on removal and installation of electronic control units, refer to General Data MG 12.

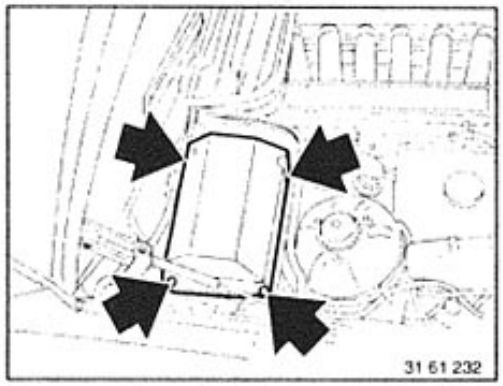

Unfasten screws in cover of electronics box. Remove cover.

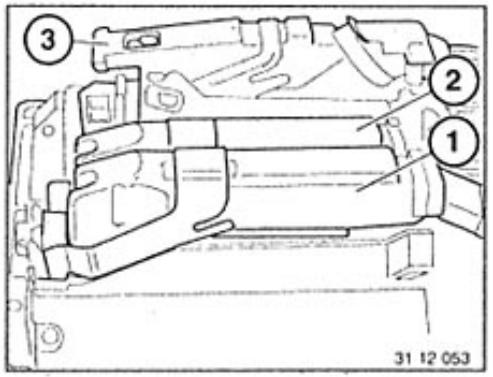

1 = DME control unit 1
2 = DME control unit 2
3 = EML control unit

Caution!
After replacement of the EML control unit, always perform the following test:
Check safety path of the Electronic Engine Power Control. Procedure described in Repair Instructions 12 70 500.

12 71 530 Replacing control unit for Electronic Engine Power Control (M73)

Note instructions on removal and installation of electronic control units, refer to General Data MG 12.

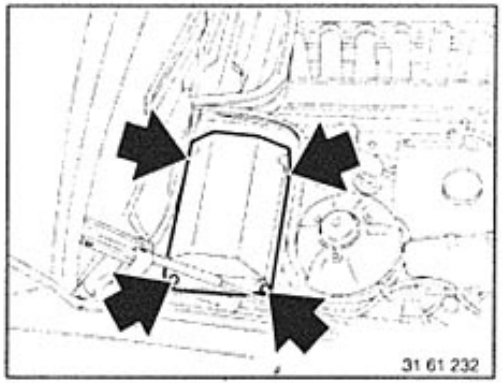

Unfasten screws in cover of electronics box. Remove cover.

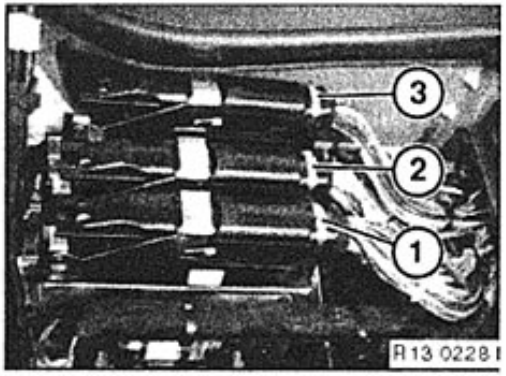

1 = DME control unit 1
2 = DME control unit 2
3 = EML control unit

Caution!
After replacement of EML control unit, always note:
Connect up DIS and follow procedure for replacing control unit.

12 72 520 Removing and installing or replacing accelerator sensor (M70, S70)

Switch off ignition.
Remove trim from bottom left side of instrument panel.

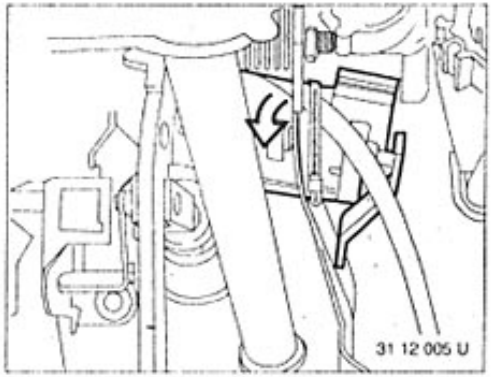

Rotate accelerator sensor clockwise until retaining lug can be withdrawn through aperture.

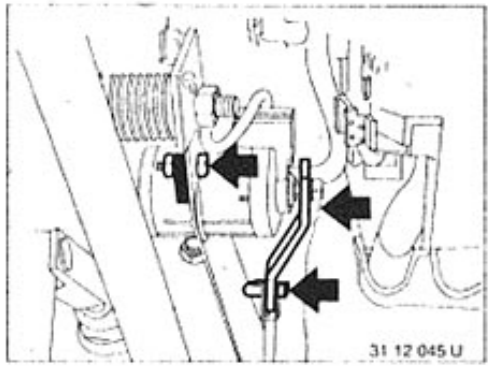

Remove accelerator sensor:
Disconnect lever from accelerator pedal.
Unfasten lever on accelerator sensor and pry off carefully.
Unfasten both screws.
Disconnect plug connection.

Caution!
Accelerator sensor must not be subjected to load in axial direction: this can cause premature damage to accelerator sensor.

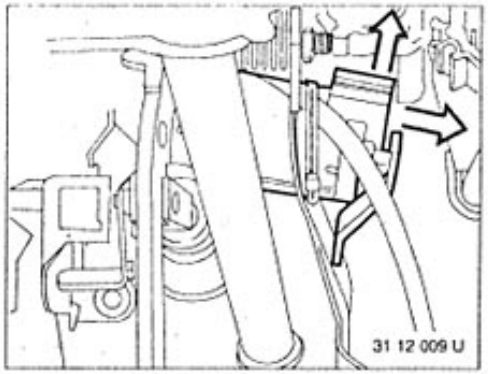

Press accelerator sensor upwards into acoustic insulation, to enable the 2nd retaining lug to be withdrawn from the pedal block.

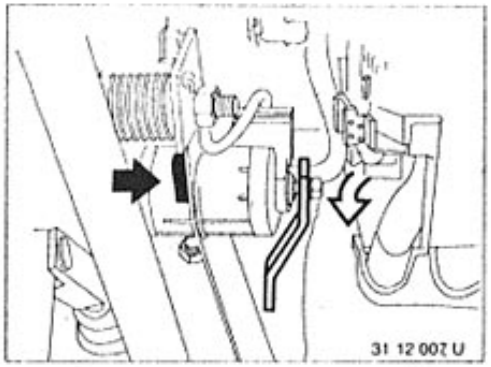

Rotate accelerator sensor approx. 45° counterclockwise to enable the front retaining lug to be withdrawn from the oval aperture in the pedal block.

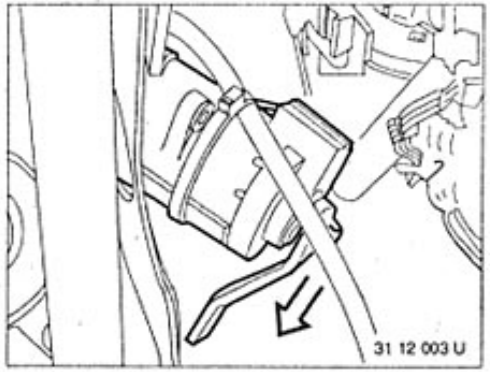

Rotate accelerator sensor approx. 60° counterclockwise, tilt obliquely downwards towards heating pipes and pull down to remove.

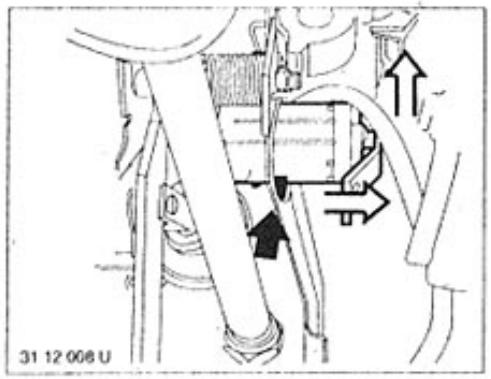

Withdraw retaining lug. Press accelerator sensor slightly towards acoustic insulation and pull out.

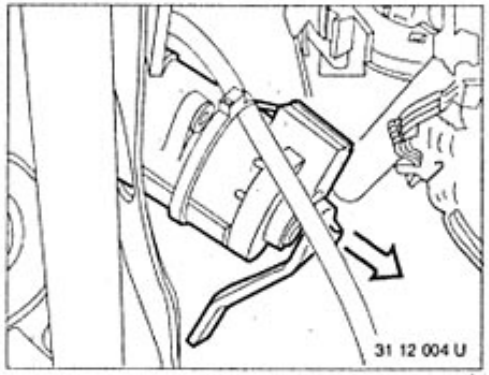

Rotate accelerator sensor in such a way that lugs are realigned over hole pattern in bracket.

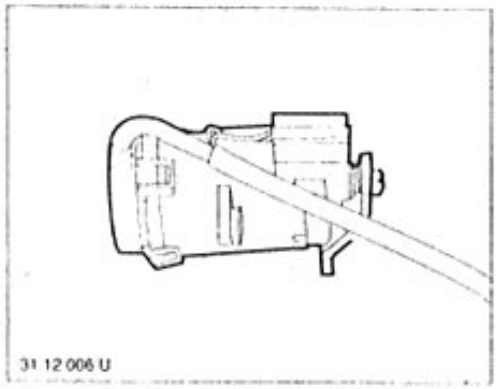

Installing Pedal Value Sender:
Installation will be easier with the lead of the pedal value sender positioned as shown.

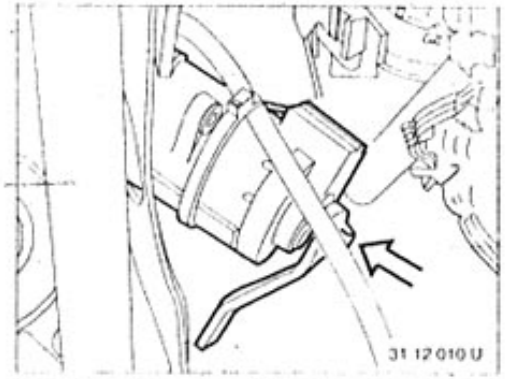

Work in pedal value sender that the electric lead outlet is inclined past the heater pipes.

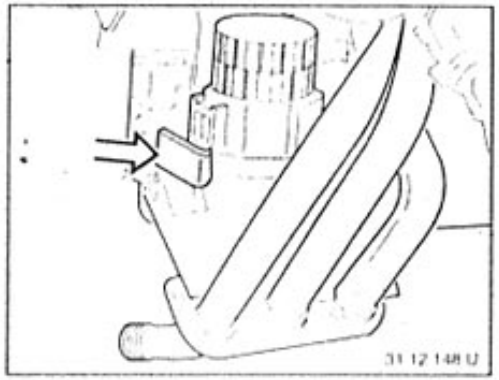

Bend clip of heater mounting screw away.

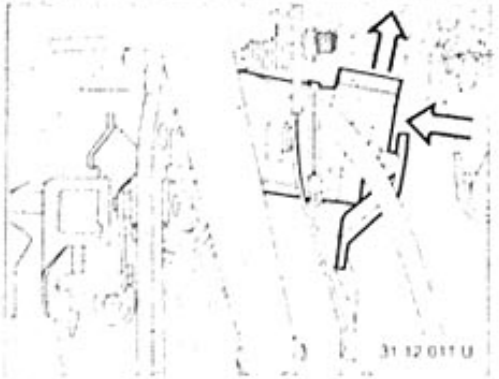

Press pedal value sender forward at an angle in direction of the firewall.
Work rear end of the pedal value sender into the pedal console.

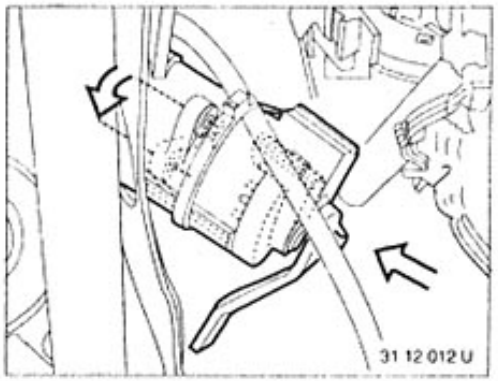

Turn pedal value sender clockwise until the front mounting eye is on the oval opening.
Press pedal value sender up into the noise insulating sheet.
Work in eye.

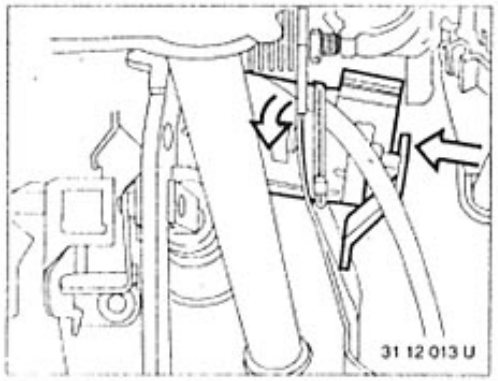

Turn pedal value sender until the second mounting eye is above the oval opening.
Work in eye.

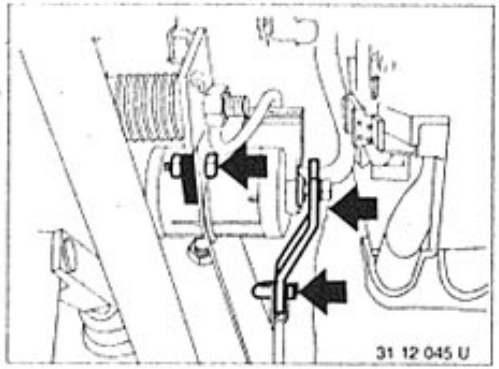

Install bolts.
Mount arm.
Secure lead with wire strap.
Tightening torque*.

Important!
Pedal value sender must not be loaded in axial direction, as pedal value sender could be damaged in advance.

Mount plug.
Adjusting and Checking Function of Pedal Value Sender:
See Adjusting Accelerator Pedal in 12 72 ....
Check safety path – see 12 70 500.

See Specifications

12 72 520 Removing and installing or replacing accelerator sensor (M73)

Switch off ignition.

Remove trim from bottom left side of instrument panel.

Note:
Whenever the accelerator sensor (PWG) is disconnected, basic adaptation of the accelerator sensor is required.
Procedure: Connect up DIS and select diagnosis option on EML IIIS control unit then proceed in accordance with DIS instructions.

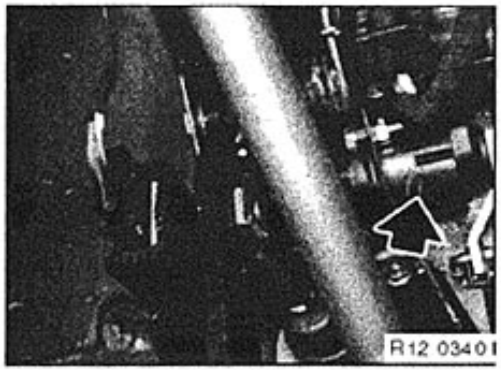

Installation: The accelerator sensor is mounted on the pedal block below the steering column.

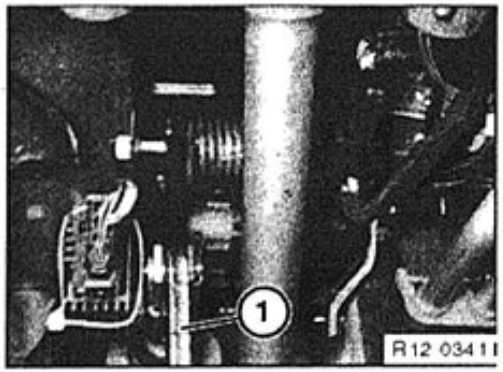

Unfasten cable tie (1) and remove brake light switch (2), refer to 61 31 310.

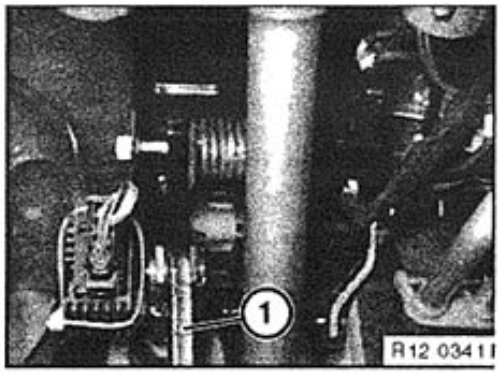

Remove brake pedal (1) from push rod, unfasten lock nut on push rod and remove push rod.
Removing and adjusting push rod, refer to 35 21 000.

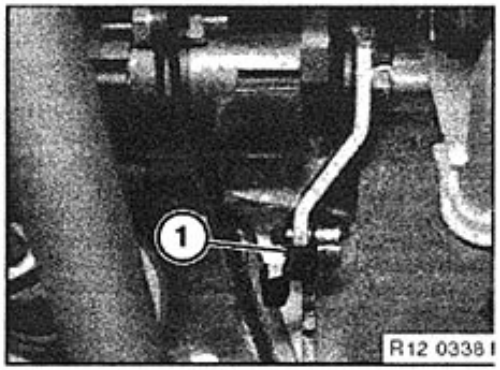

Unfasten retainer (1) from accelerator pedal linkage.

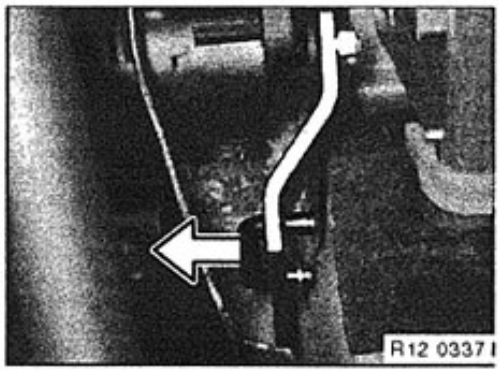

Disconnect linkage.

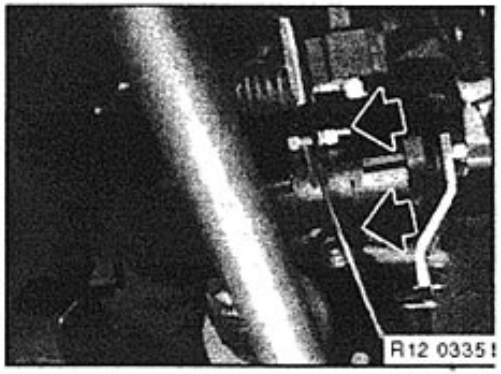

Unfasten screws on accelerator sensor with special tool 11 4 190.

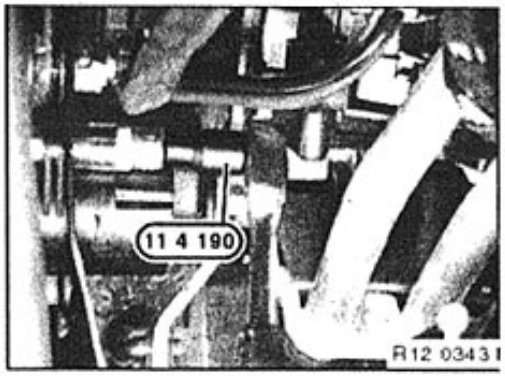

Unfasten screws on accelerator sensor with special tool 11 4 190.

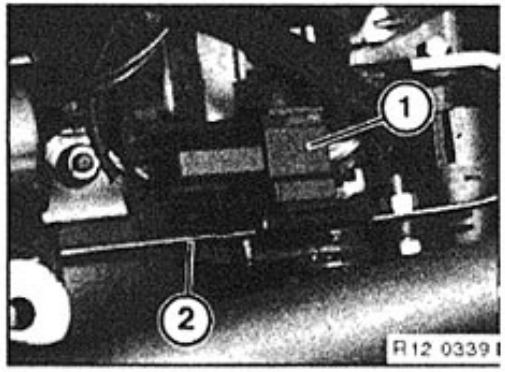

Disconnect plug connection (1).

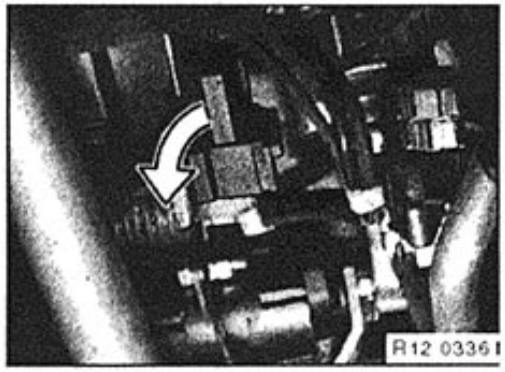

Unscrew plug connection to remove from bracket in pedal block.

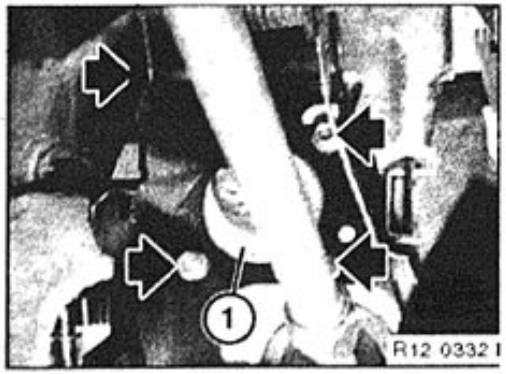

Loosen nut on pedal block to enable the brake unit (1) to be pressed approx. 5mm back into engine compartment.

Installation:
Replace self-locking nut.
Tightening torque, refer to Technical Data MG 35.

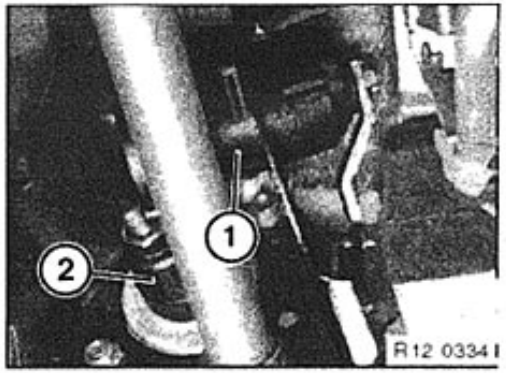

Press brake unit (2) approx. 5mm back into engine compartment and remove accelerator sensor (1).

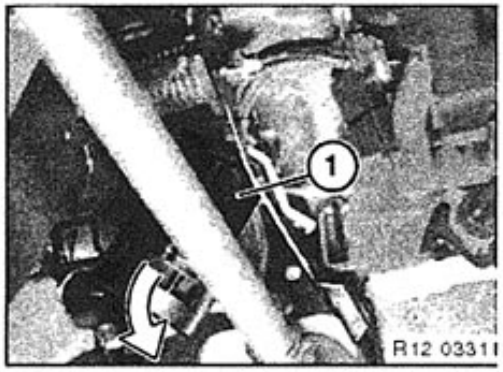

Remove accelerator sensor (1).

Caution!
Lever on accelerator sensor is preset by the factory and must not be unfastened!
If the lever on the accelerator sensor has been unfastened, the complete accelerator sensor must be replaced!

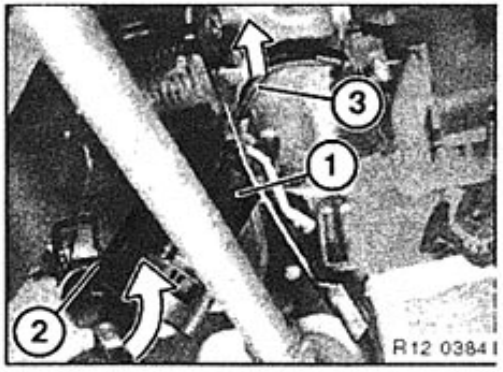

Installation:
First insert wiring harness (3) and ensure, when assembling the accelerator sensor (1), that the wiring harness is in the upper section of the aperture.
Insert accelerator sensor (1) between steering column and bracket for brake light switch, pressing pedal block approx. 5mm backwards when doing so.

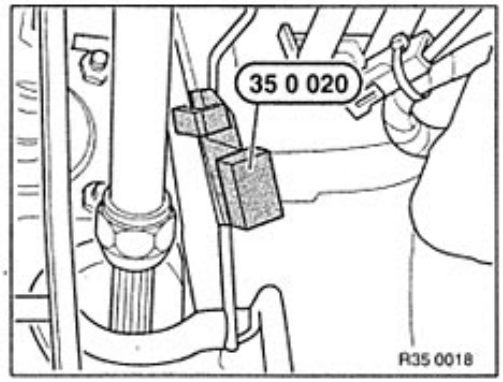

Checking adjustment of switch, refer to 35 41 480.

Installation:
After assembly of accelerator sensor, a basic adaptation procedure for the accelerator sensor must be run.
Procedure: Connect up DIS and select diagnosis mode for EML-IIIS control unit then follow subsequent procedure in accordance with DIS instruction.

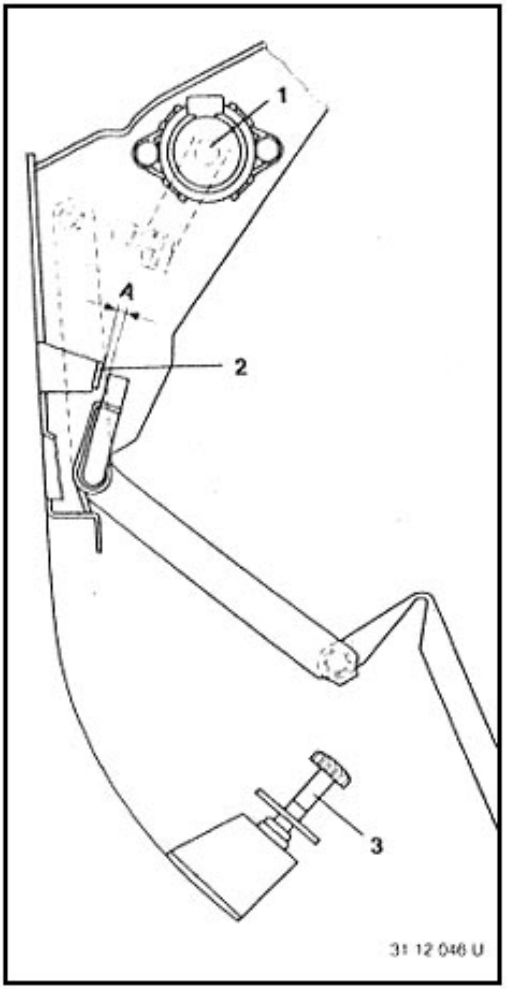

12.72 550 Checking and adjusting accelerator sensor kinematics (M70)

1. Idle speed setting

Loosen hex nut (1) on accelerator sensor.
Provide a gap of A = 3 mm between accelerator pedal and idle detent (2)
(insert feeler gauge or similar item between them).
Tighten hex nut (1) on accelerator sensor (tightening torque *). Support accelerator sensor when tightening lever.

2. Full throttle setting

a) Manual transmission:
move accelerator pedal to kick-down pressure point in accelerator sensor.
In this setting, move knurled screw (3) firmly up against accelerator pedal and secure with lock nut.

b) Automatic transmission:
Actuate accelerator pedal to kick-down pressure point in accelerator sensor. In this setting, adjust knurled screw (3) with gap of 6 mm between knurled screw and accelerator pedal.
Lock off knurled screw.

Caution!
After adjustment, check accelerator sensor with diagnosis tester. Connect up tester, switch on ignition and move accelerator pedal to full throttle setting. Compare actual voltage value displayed by tester with nominal value and, if necessary, correct the setting.
Nominal value:
a) manual transmission: 3.15 ... 3.3 V
b) automatic transmission: 3.7 ... 3.8 V

Nominal value: Idle speed = min 353 mV
Idle speed = max 451 mV

Check safety path, refer to Gr. 12
Pos. 12 70 500
Note:
Before fitting test adapter – interrogate EML fault memory.

*Refer to Technical Data

On-board Diagnosis

The DME control unit recognizes exhaust relevant faults and displays them by lighting up the "Check Engine" control lamp continuously.
Check Engine control lamp – see Group 62. The fault lamp comes on after turning on the ignition and goes out when the engine runs. It is on continuously while the engine is running, if there is a fault.

Flashing codes help in locating faults precisely and eliminating them.

Fault Output:
Activate flashing code output: ignition ON, operate full load contact 5 times within 5 seconds.
Fault output begins.
See sample fault: faulty NTC coolant – code 1223.

1 = Start of fault code

2 = End of fault code

Note:
Each additional call must be activated again.
Code X444 - fault no longer stored.
Code X000 (long dark phase) - after fault output = end of output.

Sample Fault Code: NTC Coolant
Code 1223

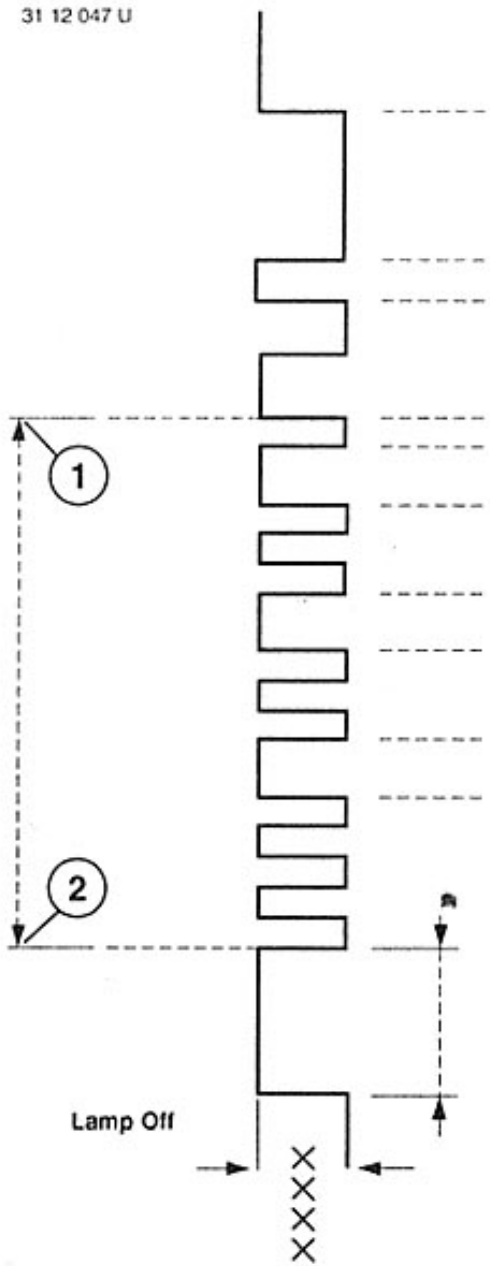

5 times full load stop within 5 sec. with ignition ON

5 s Lamp ON

0.5 s Lamp OFF
2.5 s Lamp ON

2.5 s Lamp OFF

Flash 1 - 2 times*

2.5 s Lamp OFF

Flash 1 - 8 times
Note number

2.5 s Lamp OFF

Flash 1 - 8 times
Note number

2.5 s Lamp OFF

Flash 1 - 8 times
Note number

2.5 s Lamp OFF

Lamp ON

Two times for M 70
Left cylinder bank

TABLE OF FAULT CODES FOR DME 1.7

Code	Fault Branch
x111	Ignition
x211	Control unit (self test)
x215	Air mass sensor
x221	Oxygen sensor
x222	Oxygen control
x223	NTC coolant (see fault example)
x224	NTC intake air
x231	Monitor of bat. voltage supply to contr. unit
x251	Injector final stage 1 (cylinders 2,4,6)
x252	Injector final stage (cylinders 7,9,11)
x261	Elec. fuel pump relay final stage
x263	Tank venting final stage
x264	Relay 3 final stage (oxygen sensor heating)
x268	Idle speed, CO potentiometer
x278	Ignition timing correction
x512	AC compressor shutoff
x513	Final stage pin 18
x515	Converter lockup clutch
x516	Speed signal
x517	MSR signal
x518	ASC signal
x818	Final stage

Remarks:
FL = Fault lamp
VL = Full load

Table 1: CARB Flashing Code Scope

Remarks:
x= 2 for M 70 control unit of left engine side
(cyl. 7 ... 12)
x= 1 for M 70 control unit of right engine side
(cyl. 1 ... 6) and all other engines

Fault memory empty: code x444

Fault memory cancellation: versions.

1. Disconnect DME control unit on power supply by, for example, unplugging the control unit.

2. Put out cancel fault memory command with a BMW SERVICE TESTER (see car electric/electronic test plan).

3. Reactivate with ignition "ON" while flashing code x000 is being put out; close (make) the full load switch 10 seconds.

13 Fuel System

13 Fuel system

For additional work, refer to “Repair Instructions for 7 Series E38”

13 00 002 Function check of the Digital Motor Electronics (DME)

Connect up BMW Service Tester.
Carry out brief test.
Interrogate fault memories.
Interrogate status,
refer to: operating instructions for
BMW Service Tester/BMW diagnosing system

Additional information on troubleshooting, refer to:
Electrical Troubleshooting Manual file / Schematics folder

13 00 . . . Checking components

Checking coolant temperature sensor:

Attach Jetronic test cable 61 1 440.
Use ohmmeter to check nominal value*), to check the entire temperature range, remove the sensor, immerse in water bath up to hex head and check using an ohmmeter*.

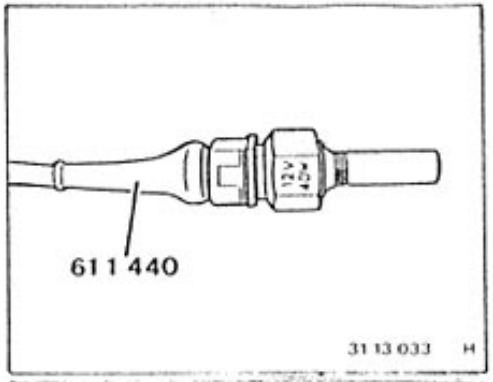

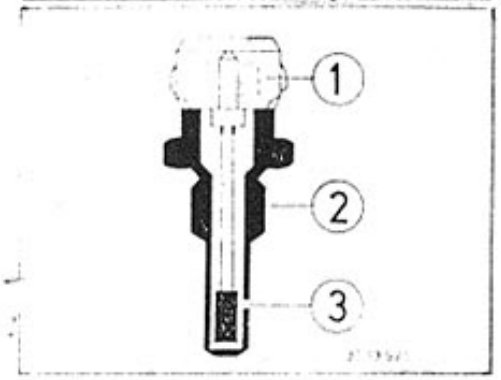

The temperature sensor measures engine temperature and transmits this to the control unit in the form of a resistance value.
The resistance value falls as temperature rises (NTC).
1 = plug connection
2 = housing
3 = NTC resistance

* Refer to Technical Data

Checking intake air temperature sensor:

Check resistance value* on temperature sensor. Check leads from control unit connector to temperature sensor connector for interrupts or short circuits**.

Checking tank vent valve

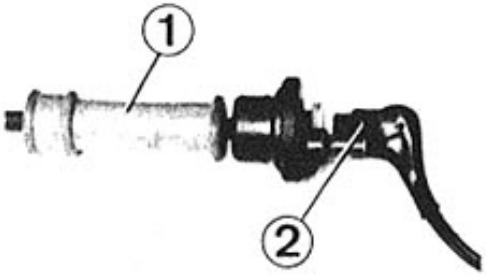

32 16 035

Attach vacuum hose (1) from BMW Service Tester to the 8 mm dia. neck.
Provide tank vent valve with 12 V voltage (2) (special tool 61 1 440).

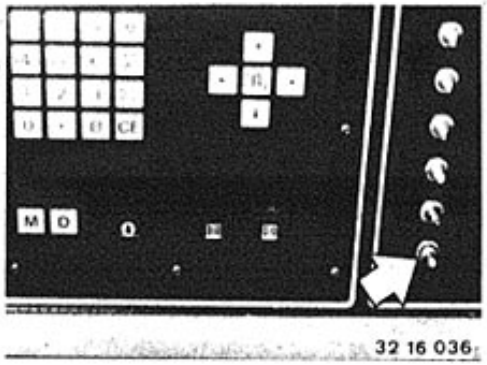

32 16 036

Select multimeter function 21 on BMW Service Tester.
Set vacuum to 600 mbar · 100.
Switch off vacuum pump.

During the measuring period of approx. 20 seconds, pressure must not drop by more than 50 mbar.
When pressure losses exceed 50 mbar, a new tank vent valve must be fitted.

**) Refer to Schematics folder

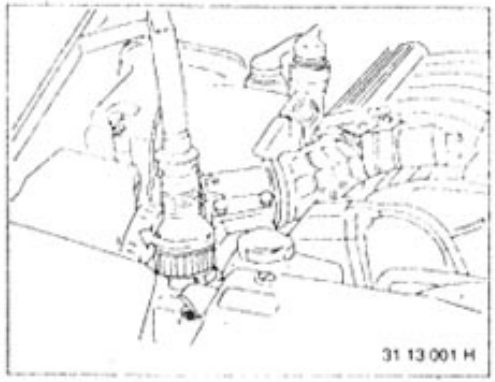

13 00 054 CHECKING ENGINE IDLE SPEED AND CO LEVEL (M 70 Engines with M 1.7 Motronic) –Cars Prepared for Catalyst–

Adjusting Conditions:
Engine at operating temperature, i.e. oil temperature at least 60° C (140° F).
Engine and ignition in perfect condition.
BMW SERVICE TESTER connected to operating instructions.
Routine checking is not necessary.

1) Engine Idle Speed Checked with BMW Diagnosing System (Status Call)
Refer to calling faults in case of deviation from nominal value*.
Check intake system for leaks.

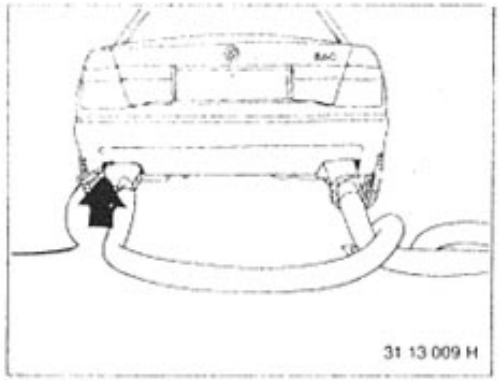

2) CO Level Test
Connect CO probe on exhaust tailpipe.
Switch off exhaust extraction systems for the time of testing.
Check idle speed CO level*, see operating instructions of BMW SERVICE TESTER or operating instructions of other tester.

Important!
Air mass sensor not on same side as tailpipe.

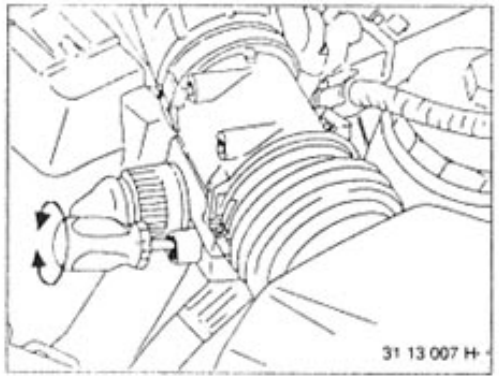

3) CO Level Correction
Remove anti-tamper lock.
Correct CO setting on the air mass sensor with a screwdriver, if necessary.

Note:
Read BMW self diagnosis before making corrections.

* See Specifications

* See Specifications

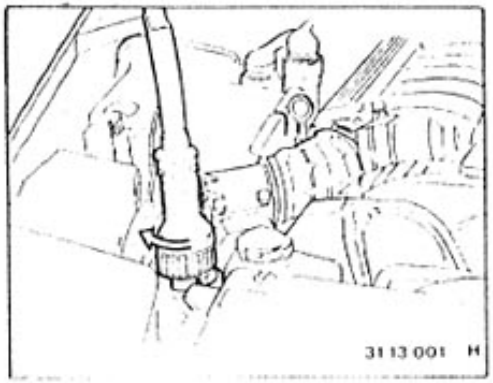

13 00 060 CHECKING ENGINE IDLE SPEED AND CO LEVEL (M 70 Engines with M 1.7 Motronic)
– Cars with Catalyst –

Adjusting Conditions:
Engine at operating temperature, i.e. oil temperature at least 60° C (140° F).
Engine and ignition in perfect condition.
BMW SERVICE TESTER connected to operating instructions.
Routine checking is not necessary.

1) Engine Idle Speed* Checked with BMW Diagnosing System (Status Call)
Call faults in case of deviation from the nominal value.
Check intake system for leaks.

Important!
Intake pipes cross each other.

Note:
Don't turn the CO level adjusting screw on the air mass sensor.

* See Specifications

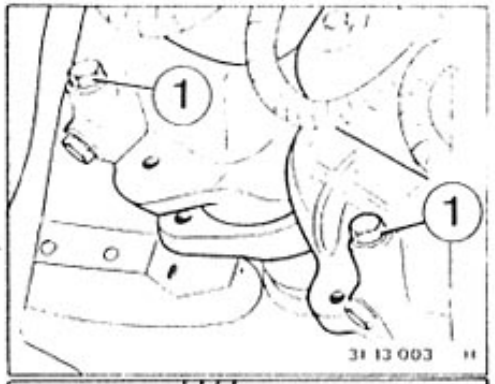

2) CO Level Test
Disconnect oxygen sensor plug connectors and mark connectors.
Unscrew bolts (1) and connect Special Tool 13 0 090 on the exhaust manifold.

Caution!
CO probes will be very hot!

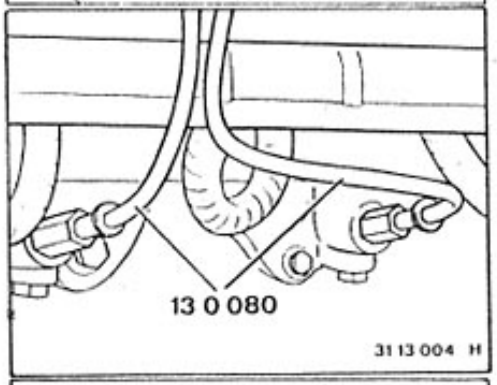

Excessive CO Level:
Check
fuel injectors,
fuel pressure and
coolant/air temperature sensors.

Insufficient CO Level:
Check hoses and connections or detect air leaks.

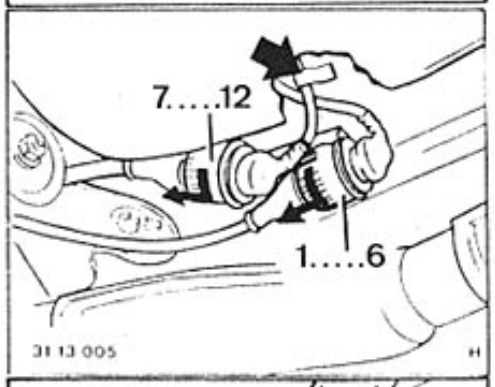

Check idle speed CO level*.
Switch off exhaust extraction systems for the time of testing.
Refer to EML and Motronic diagnosing system when nominal value is not reached.

Note:
Connect oxygen sensor after trial run.

Important!
Don't mix up oxygen sensor connections — plug with white tab is for cylinders 7 ... 12.
Read via self diagnosis if necessary.
The displayed value (approx. 0.45 V) remains constant with a disconnected oxygen sensor plug, when calling on the pertinent control unit.

Note:
Check EML safety path – see Group 12.

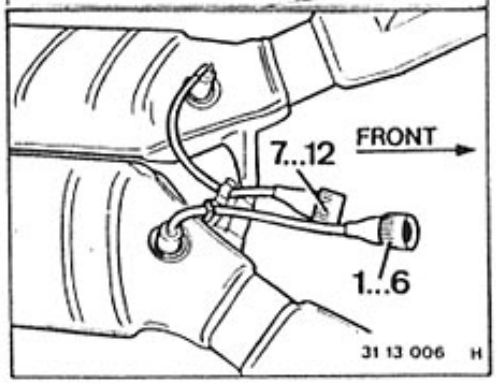

* See Specifications

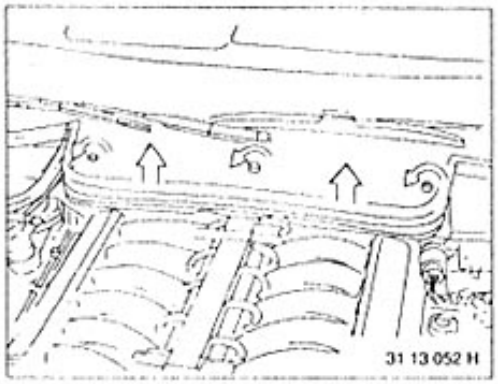

13 31 029 Checking supply pressure of fuel pump

Remove cover from fresh air housing.

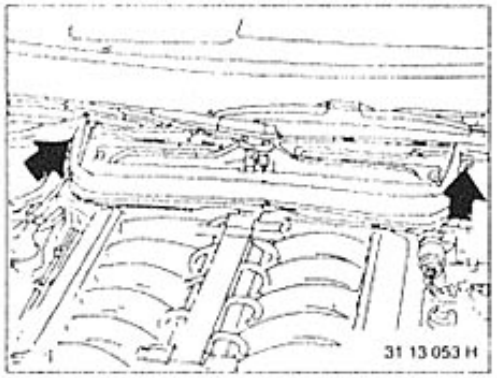

Remove fresh air housing.

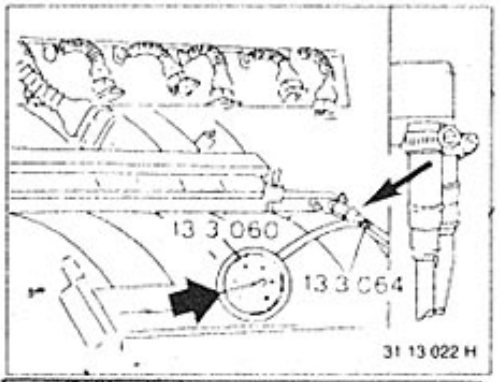

Install connection from BMW Service Tester or pressure gage 13 3 060 with connecting lead and T-piece 13 3 064 to the fuel intake line – before the fuel pressure regulator.–

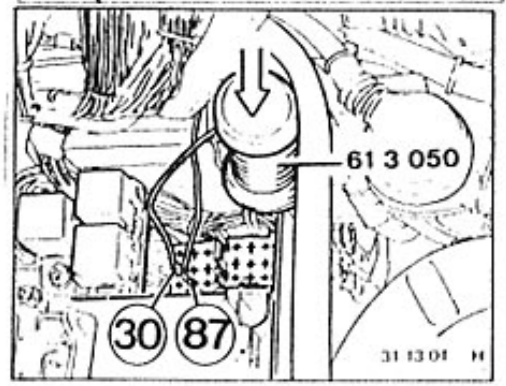

Remove relevant fuel pump relay.
Use tool 61 3 050 to bridge terminal 87 and terminal 30.
Read off system pressure*) and check layout (relay/cylinder bank).

* Refer to Technical Data Gr. 16

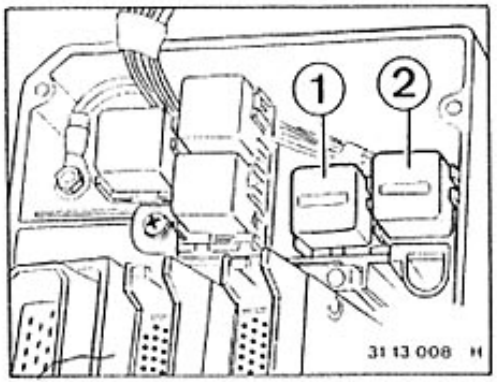

Layout: fuel pump relay
Relay (1= left)/right cylinder bank 1 - 6
Relay (2= right)/left cylinder bank 7 - 12

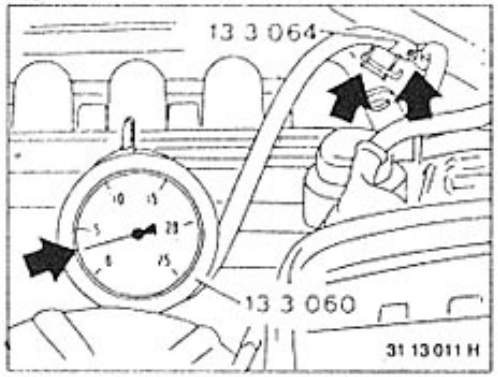

Check fuel delivery pressure;
Seal fuel line after T-piece with tool 13 3 010.
Actuate tool 61 3 050.
Check fuel delivery pressure .

* Refer to Technical Data Gr. 16

13 31 029 Checking delivery pressure of fuel pump (M73)

Switch off ignition.

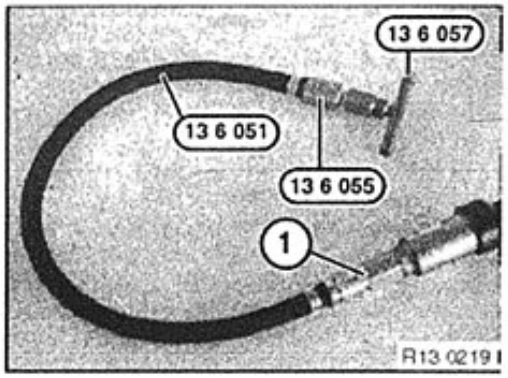

Install special tool 13 6 057 (T-piece) between the two open ends of the fuel delivery hose.

Connect special tool 13 6 057 (T-piece) to special tool 13 6 055 (reducer) and special tool 13 6 051 (hose).

Connect special tool 13 6 051 to quick-release coupling on pressure sensor (1) on DIS.
Caution:
note when removing the special tool!
Fuel in lines is under pressure (approx. 3 bar), catch escaping fuel and dispose of it correctly!

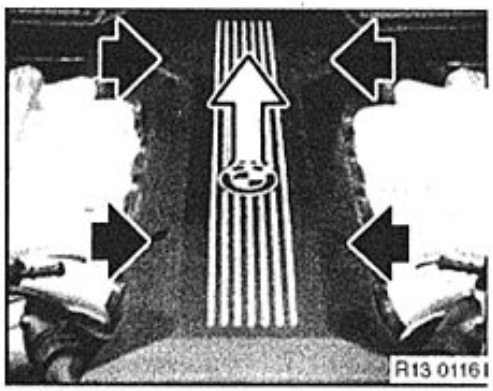

Twist screws through 90 °.
Remove cover from cylinder head cover.

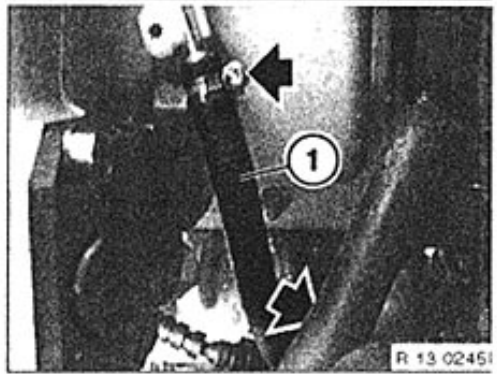

Caution!
Fuel in lines is under pressure (approx. 3 bar): catch escaping fuel and dispose of correctly!

Cut through hose to fuel delivery line (1).

Installation:
Replace fuel hose and hose clips.

Connect up Diagnosis Information System (DIS):
Select Measuring option.
Select Pressure Check.

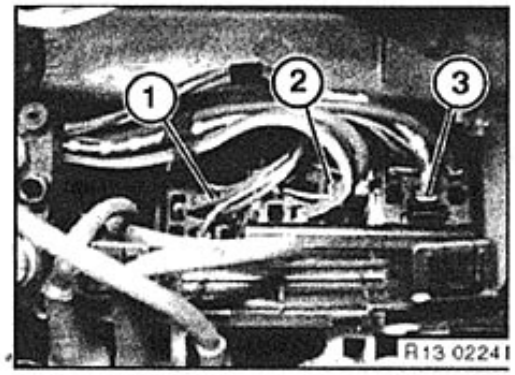

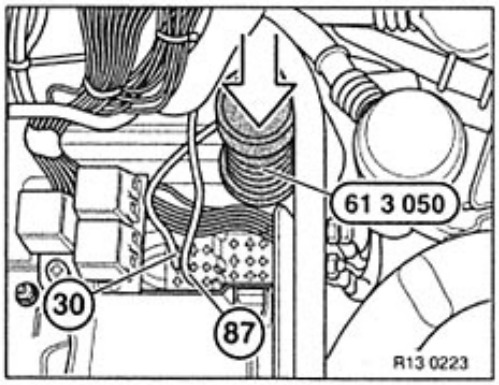

Remove fuel pump relay (1).
Connect special tool 61 3 050 to terminal 87 or 87b and to terminal 30.
Actuate special tool 61 3 050 for approx. 10 seconds and read off delivery pressure.
Nominal values:
Delivery pressure of fuel pump, refer to Technical Data 16 14
Fuel pressure regulator, refer to Technical Data 13 53

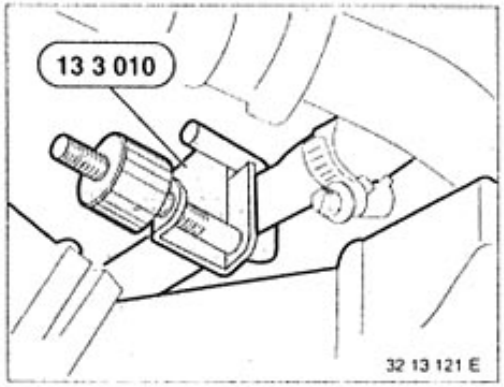

If delivery pressure is not reached, fuel return line must be sealed using special tool 13 3 010.

Repeat the pressure check.

If the delivery pressure is reached or exceeded:

Replace the pressure regulator.

If the delivery pressure is not achieved:

Check hose routing from tank to engine on fuel pump (e.g. squashed areas, leaking).

Check fuel filter (e.g. for contamination) and replace if necessary.

If the hose routing and fuel filter are O.K., check plug connection on the fuel pump for signs of corrosion, cleaning if ncessary, then repeat the pressure test. If the delivery pressure is still not reached after this action is taken, replace the fuel pump.

SURVEY OF FUEL FILTER AND PIPES

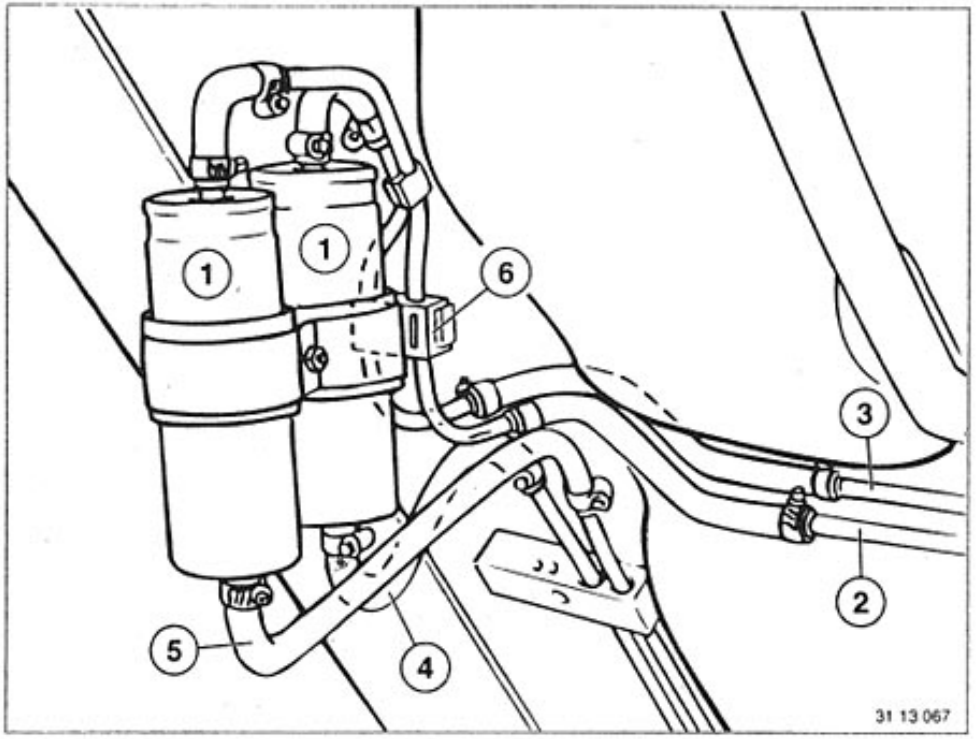

1 = Fuel filter
2 = Fuel pipe from tank
3 = Fuel pipe from tank
4 = Fuel pipe to cyl. 1...6 (right)
5 = Fuel pipe to cyl. 7...12) (left)
6 = Pipes secured on filter holder

13 32 051 REPLACING FUEL FILTER

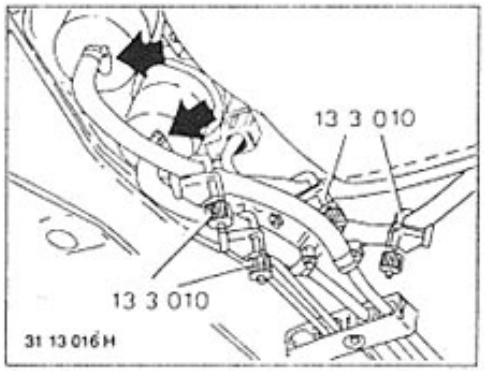

Clamp all hoses with Special Tool 13 3 010.
Unscrew bolt (1).
Take off lower hoses.

Caution!
Catch escaping fuel.

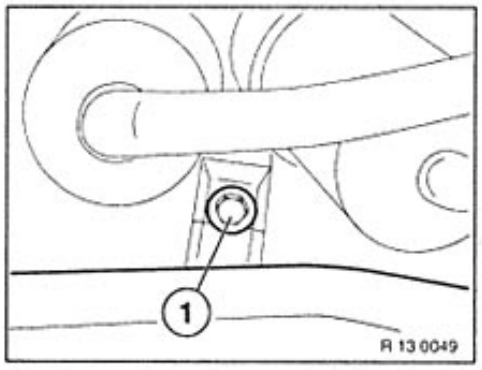

Unscrew mounting nut (2).
Take off upper hoses.

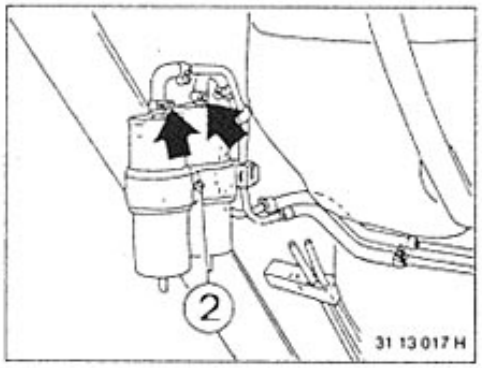

Installation:
Check direction of flow (arrow) or outlet (OUT).

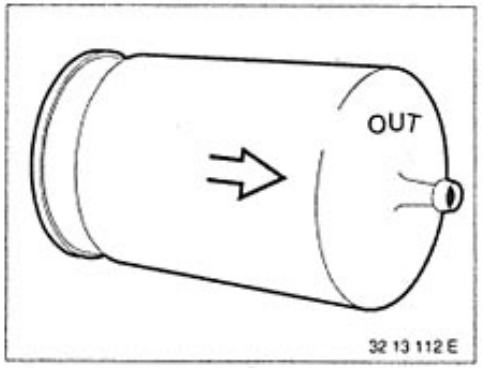

13 32 051 Replacing fuel filter (M73)

Switch off ignition.

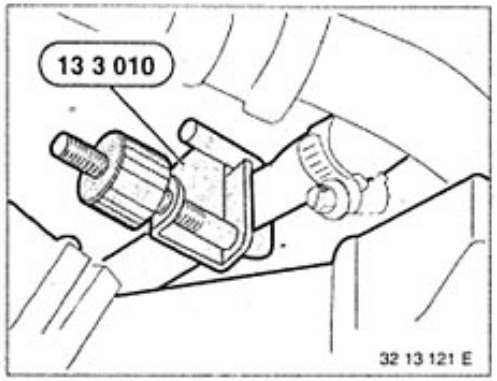

Disconnect all lines to and from fuel filter with special tool 13 3 010.

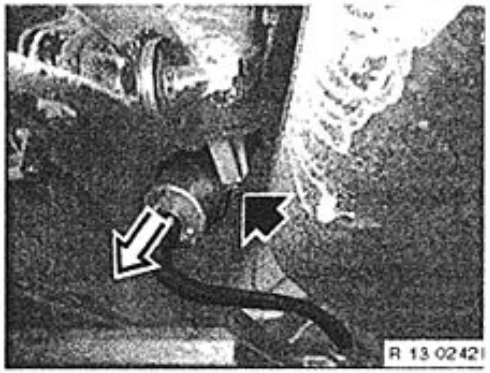

Unfasten screw and pull filter downwards to remove.
Unfasten hose clips and remove hoses.

Caution!
Catch escaping fuel and dispose of correctly.

Installation:
Fit new hose clamps.

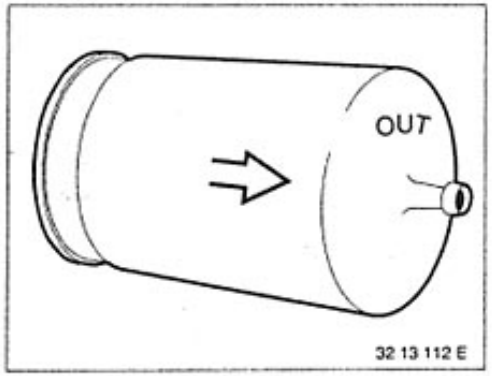

Installation:
designated by direction of flow (arrow) or letters "OUT": always take account of this during installation.

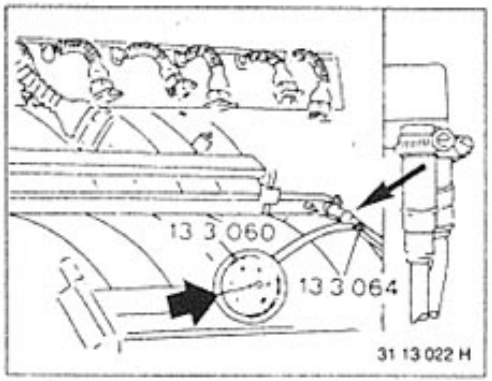

13 51 199 Checking fuel pressure regulator

Install BMW Service Tester or pressure gage 13 3 060 with connecting hose and T-piece 13 3 064 in the fuel feed line in front of the fuel pressure regulator.

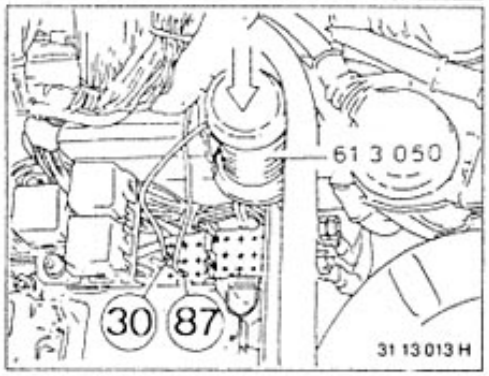

Pull off fuel pump relay.
Bridge terminals 87 and 30 with tool 61 3 050.
Check fuel injection pressure*).

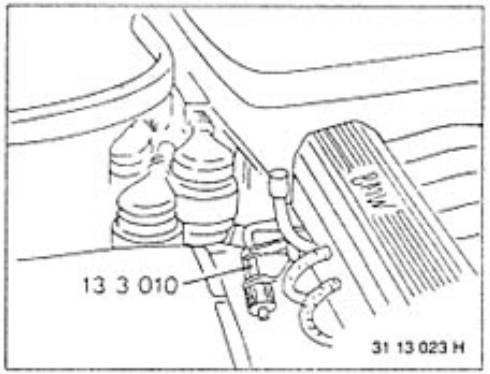

If fuel injection pressure*) drops too fast, plug return hose with tool 13 3 010 and briefly operate tool 61 3 050 once again, refer to 13 31 . . .

If the injection pressure is now maintained, the pressure regulator is faulty.
If the injection pressure drops, there is a leak in front of the pressure regulator.

*) Refer to Technical Data

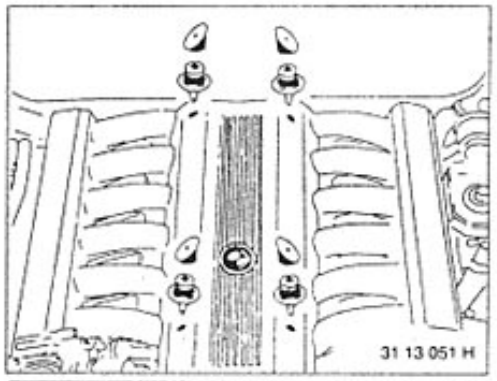

13 51 630 Replacing fuel pressure regulator

Remove cover.

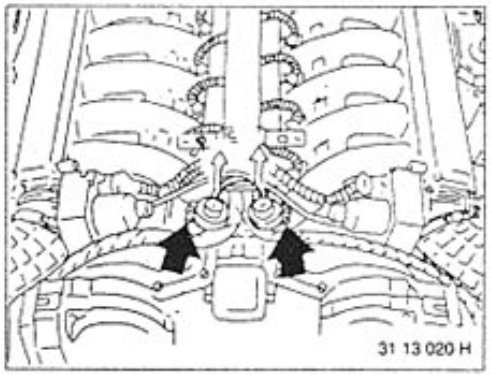

Remove vacuum hose.
Unfasten screw, remove clip.

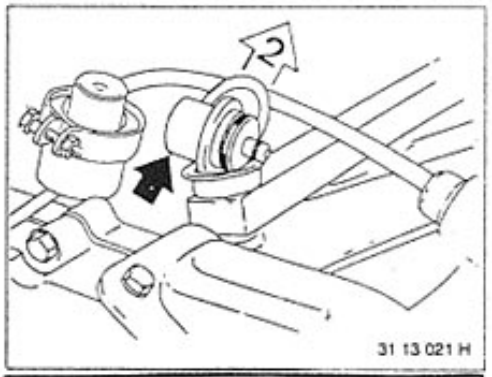

Lift up and remove pressure regulator (2).

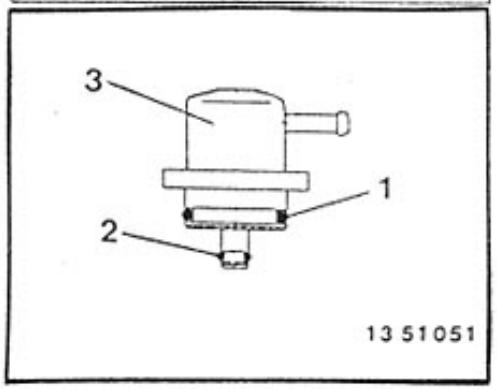

Installation:
Replace seals (1) and (2).
Check code (3).

13 51 630 Replacing fuel pressure regulator (M73)

Switch off ignition.

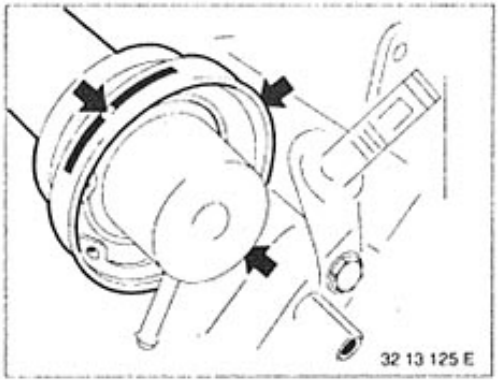

Installation:
Allow lug of retaining ring to locate in recesses in injector pipe.

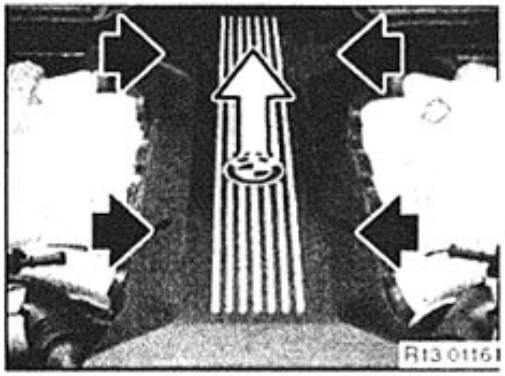

Twist screws through 90°.
Remove cover from manifold.

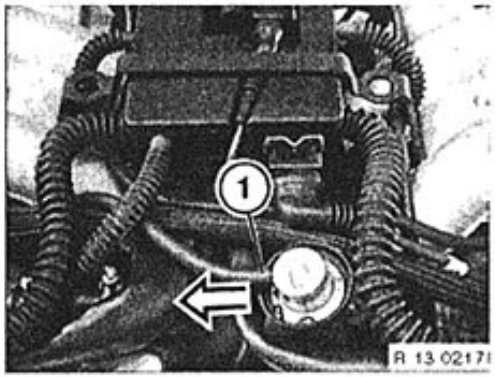

Remove vacuum hose (1).
Remove retaining rings.

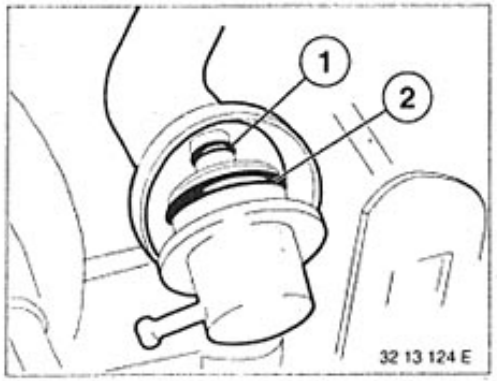

Note position of vacuum hose and note for subsequent assembly.
Twist and remove pressure regulator.

Installation:
Ensure cleanliness of sealing faces.
Replace sealing rings (1 and 2).
Coat sealing rings before assembly with anti-friction agent.

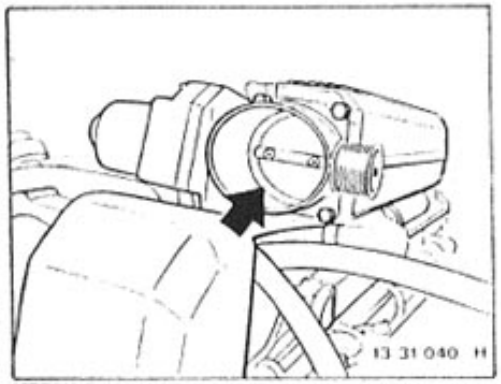

13 54 535 Replacing throttle body

Caution:
Do not reach into throttle body unit while ignition is switched on (risk of injury).

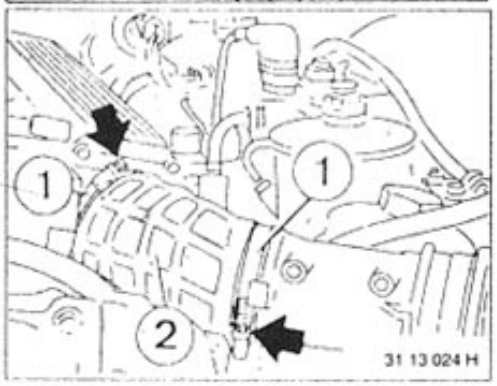

Remove feed line.
Unfasten hose clip (1) and remove hose (2).

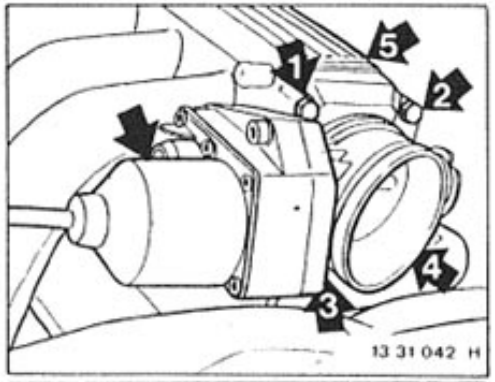

Unfasten plug connection from housing.
Unfasten screws 1 - 4.
Remove throttle body.
5 = gasket

Installation:
Fit new gasket (5).

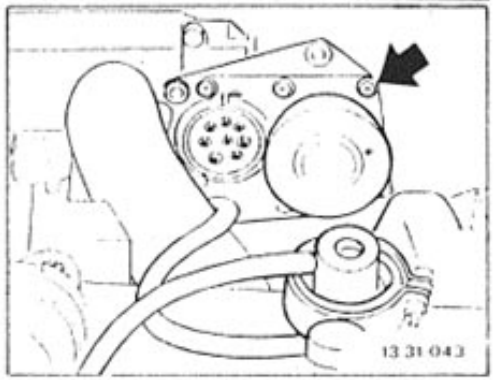

Do not dismantle EML throttle body.
Fault memory can be interrogated using EML on-board diagnosis facility.

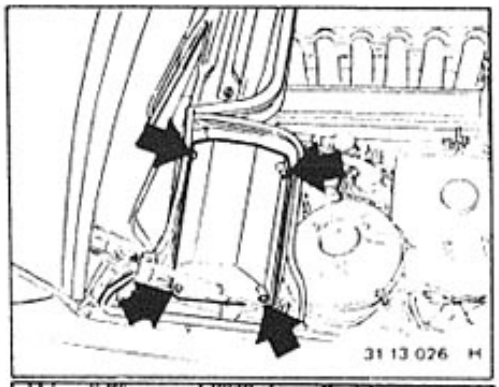

13 61 000 REMOVING AND INSTALLING OR REPLACING CONTROL UNIT FOR DME

Unscrew electronic box cover screws. Take off cover.

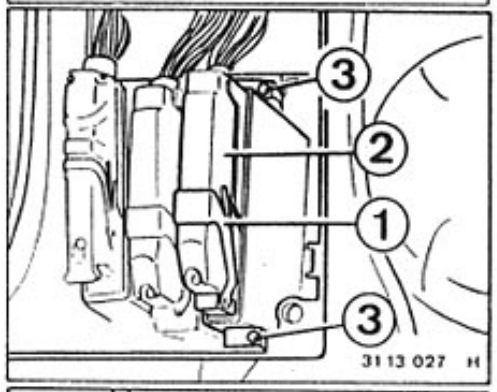

Pull up lock (1) and pull off plug (2). Loosen clamps (3) and remove control unit.

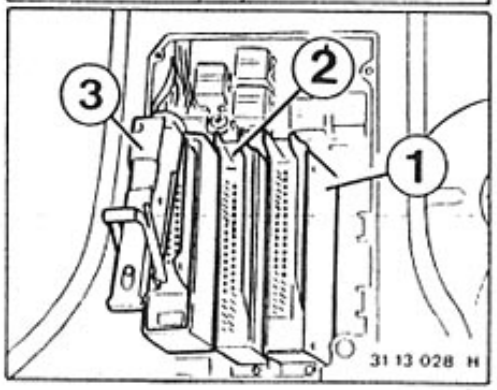

1 = DME control unit for cyl. 1...6
2 = DME control unit for cyl. 7...12
3 = EML control unit

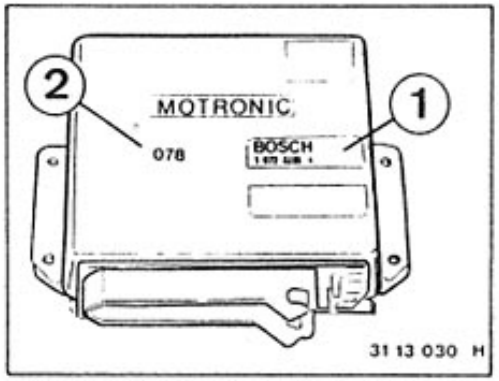

Installation:
Check code number (1)* and manufacturing date (2)*.

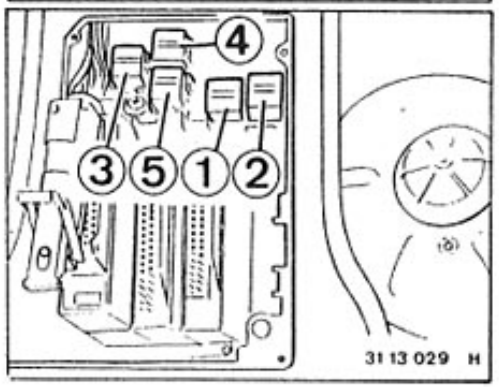

Relays in Electronic Box:
1 = Fuel pump relay for cyl. 7...12
2 = Fuel pump relay for cyl. 1...6
3 = Oxygen sensor heating relay (both)
4 = DME master relay 2 (cyl. 7...12)
5 = DME master relay 1 (cyl. 1...6)

* See Specifications

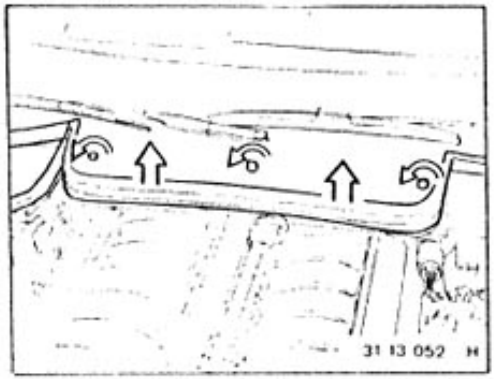

13 62 511 REPLACING INATKE AIR TEMPERATURE SENSOR

Check function – see 13 00 002.
Unscrew cover for fresh air housing.

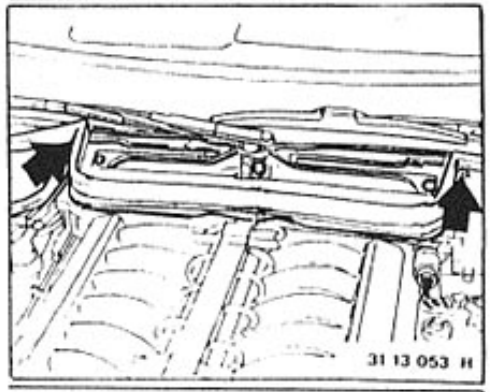

Remove fresh air housing.

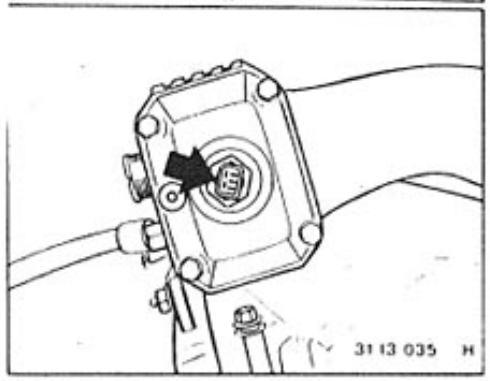

Press spring-loaded lock.
Pull off plug.
Unscrew sensor.

Installation:
Tightening torque*.

* See Specifications

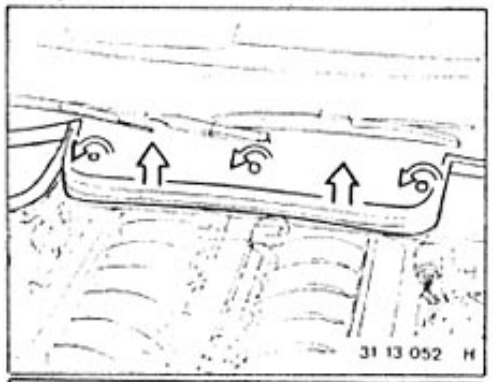

13 62 531 REPLACING COOLANT TEMPERATURE SENSOR

Check function – see 13 00 002.
Unscrew cover for fresh air housing.

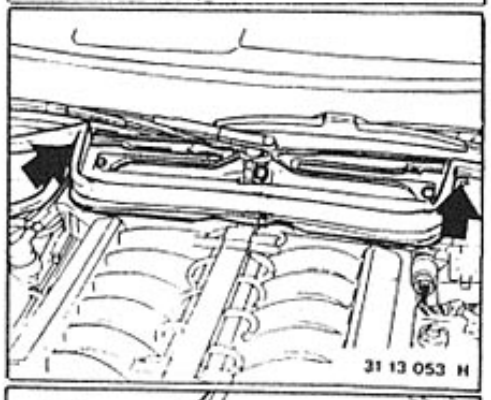

Remove fresh air housing.

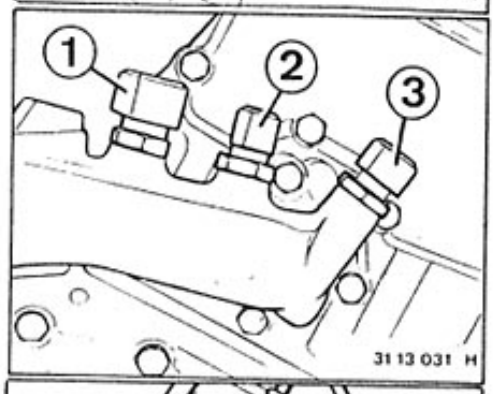

Arrangement:
1 = Temperature sensor - DME
2 = Temperature sensor - EML
3 = Temperature sensor - temp. gage

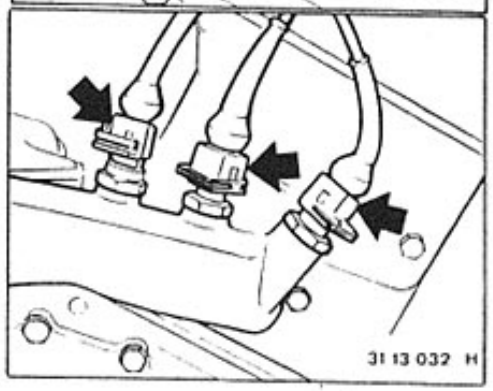

Press spring-loaded lock.
Pull off plug.
Unscrew sensor.

Installation:
Tightening torque*.

* See Specifications

13 62 560 REMOVING AND INSTALLING OR REPLACING LEFT OR RIGHT AIR MASS SENSOR

Check function – see 13 00 002.

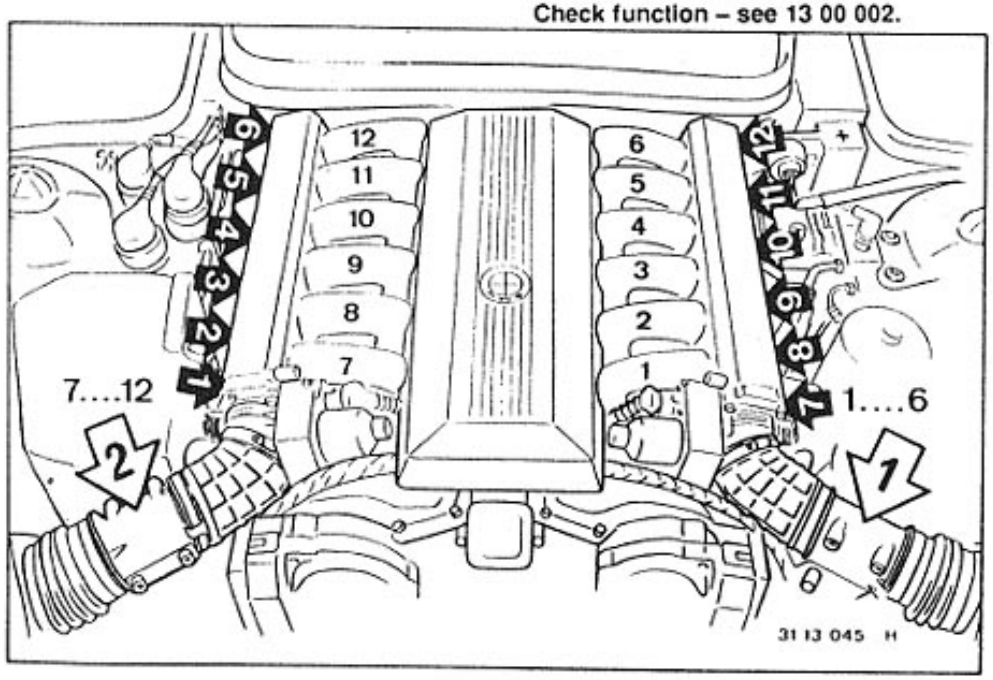

Hot Wire Air Mass Sensors:
1 = Right bank of cylinders 1...6
2 = Left bank of cylinders 7...12

Important!
Intake pipes cross; air mass sensors are inversed.

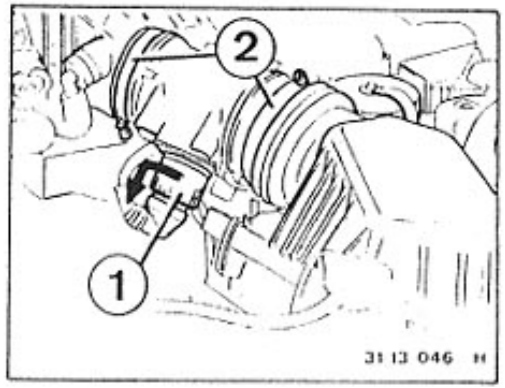

Disconnect plug (1) and loosen hose clamp (2).

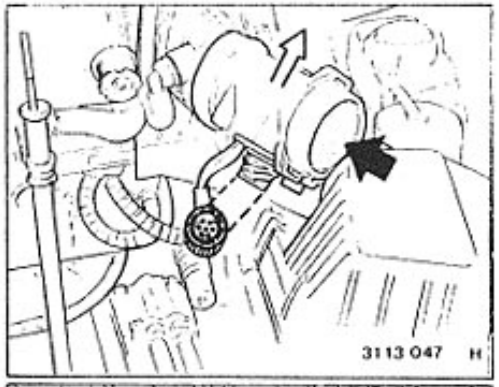

Lift out intake neck.

Installation:
Install clean filter screen only.

Cars with Catalyst:
Don't remove anti-tamper lock/correction screw.
Don't make corrections.

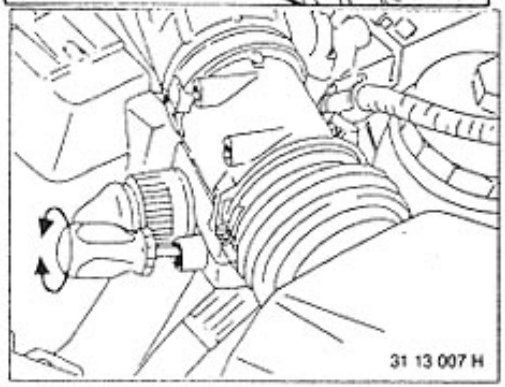

Cars Prepared for Catalyst:
CO setting* – see 13 00 060.

Installation:
Check code number and manufacturing date.

* See Specifications

13 62 511 Replacing temperature sensor for intake air (M73)

Switch off ignition.

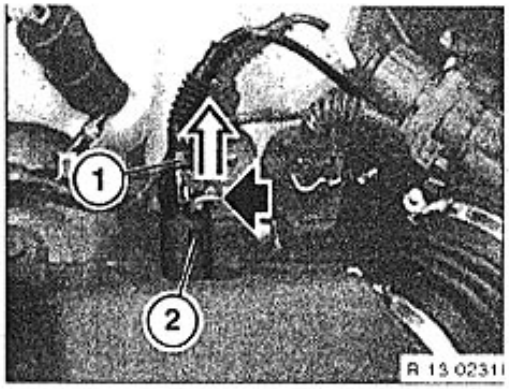

Press down retaining spring (2).
Remove connector (1).
Unclip temperature sensor.

Interrogate fault memory on control unit of Digital Motor Electronics (DME), check error messages and clear fault memory.

13 62 531 Replacing temperature sensor for coolant (M73)

Refer to,
Repair Instructions for 7 Series E38.

13 63 590 Replacing fuel pump (M73)

Switch off ignition.

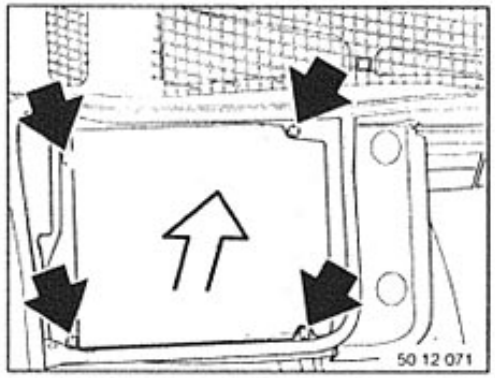

Unfasten screws.
Remove cover.

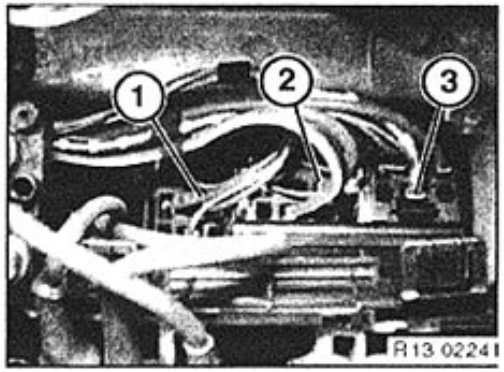

Unclip fuel pump relay (1) and receptacle from bracket. Pull relays out of relay receptacle.

Interrogate fault memory of Digital Motor Electronics (DME), check faults in memory, rectify faults and correct fault memory.

Summary of injection pipes with accessories

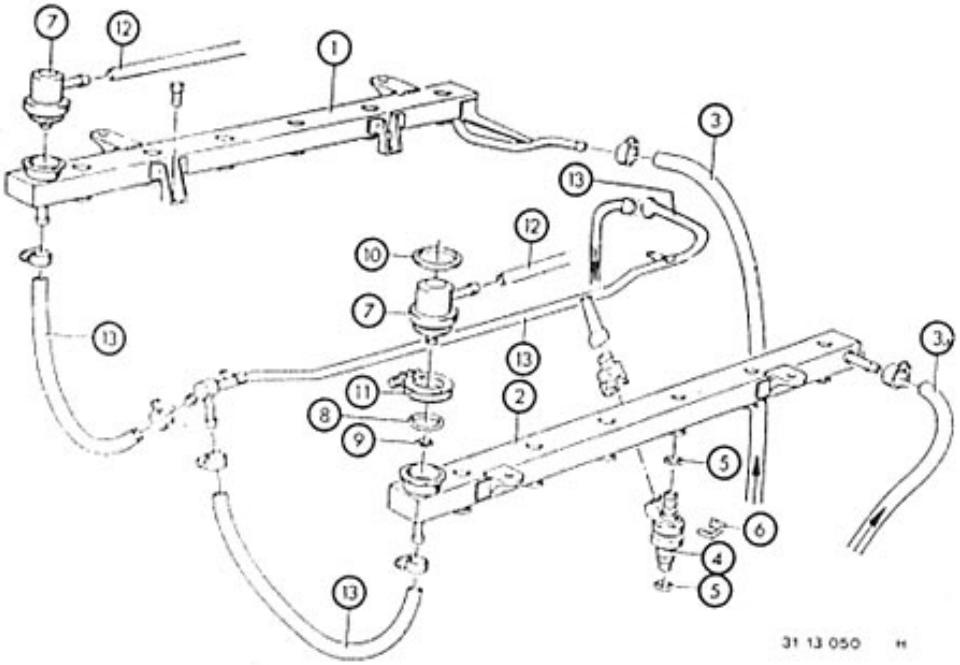

1 = cyl. 1 - 6 right injection pipe
2 = cyl. 7 - 12 left injection pipe
3 = fuel line, cyl. 1 - 6
3a = fuel line, cyl. 7 - 12
4 = injector valve
5 = seal
6 = clip (fuse)
7 = pressure regulator
8 = O-ring
9 = O-ring
10 = ring
11 = clamping strap
12 = vacuum hose
13 = return line

13 64 541 Replacing all injection valves

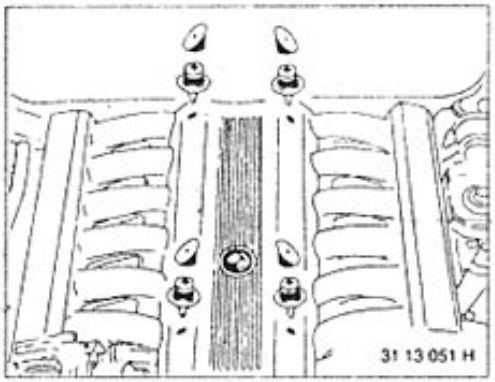

Remove protective cover.

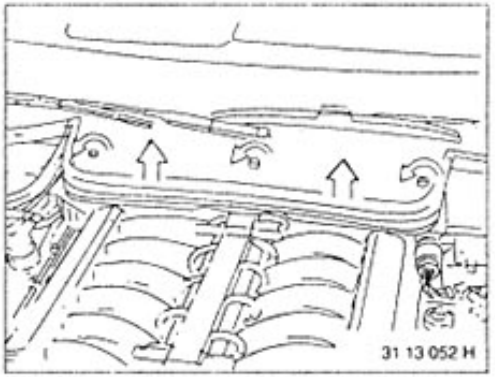

Remove cover from fresh air housing.

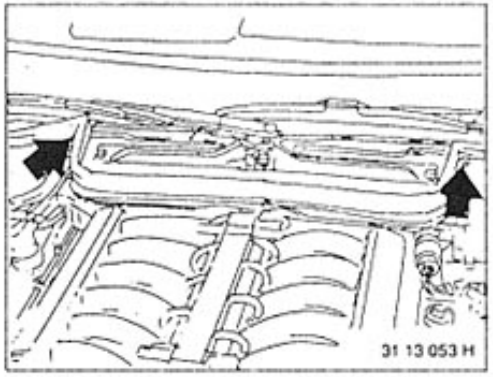

Unfasten screws.
Remove fresh air housing ...

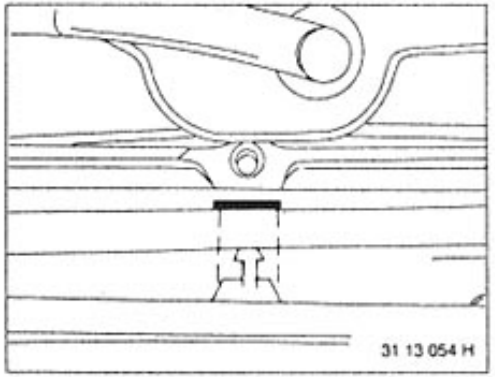

Installation:
Lower lug must locate in recess.

*) Refer to Technical Data

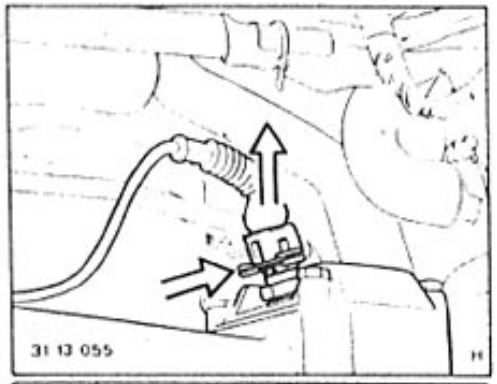

Pull off plug on air temperature sensor.

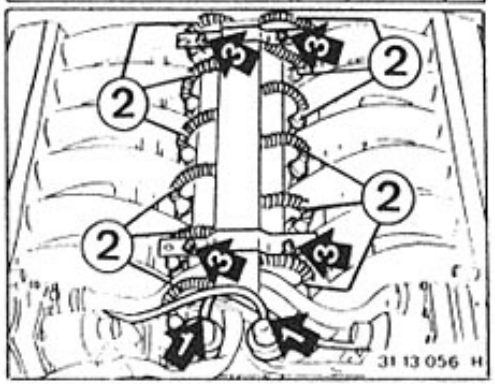

Pull off vacuum hoses (1).
Pull off fuel injector plugs (2).
Unscrew electric lead duct screws (3).

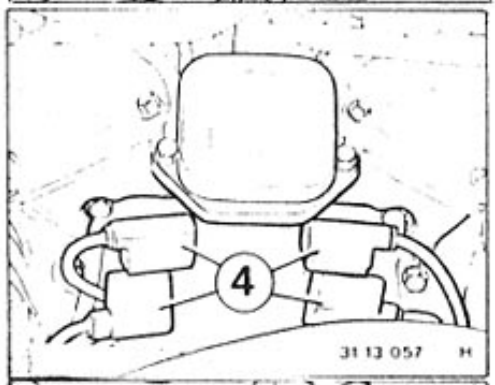

Pull off sender plugs (4).

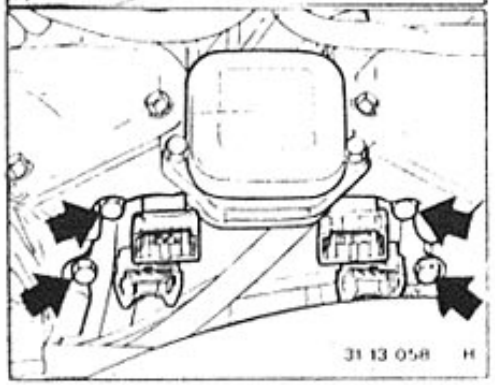

Unscrew screws.
Pull off plugs from above.

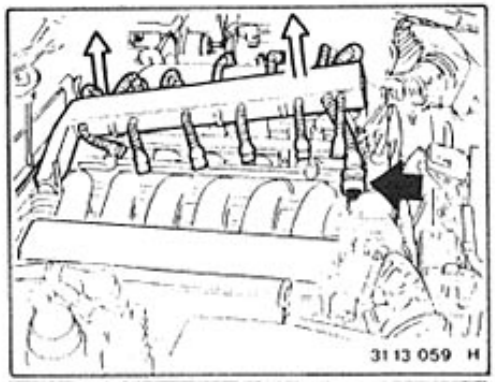

Turn and pull off throttle valve plugs.
Pull up electric lead duct.

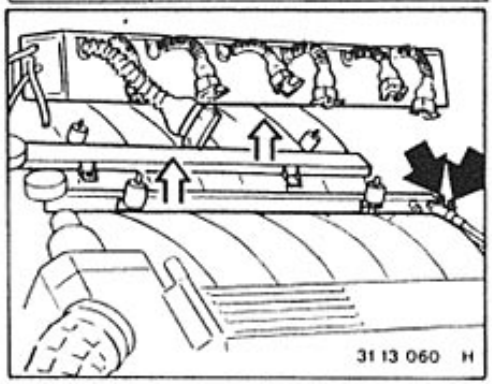

Disconnect fuel hoses.
Pull up injection pipes.

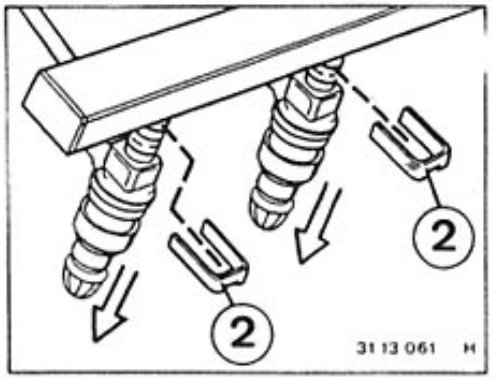

Lift off retainers (2) and remove fuel injectors.

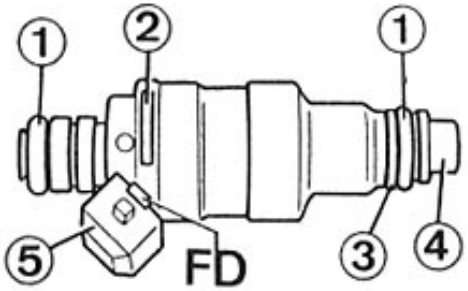

13 64 026

Installation:
Check/replace O-rings (1).
Check code number (2)*.
FD = Manufacturing date
Check position of plastic washer (3).
Check color* of control box (5) or injection nozzle guard (4).
Only lubricate O-rings with vaseline for installation.

* See Specifications

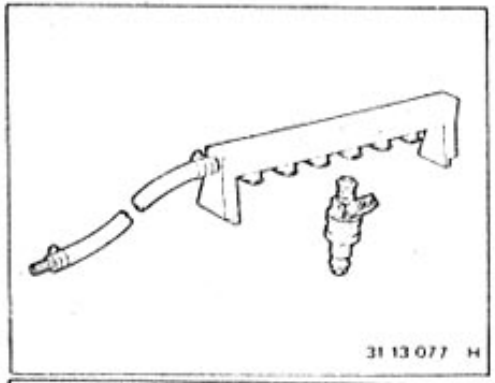

13 64 582 CHECK ALL FUEL INJECTORS FOR LEAKS AND CLEANING

Remove fuel injectors – refer to 13 64 150.

Checking Fuel Injectors for Leaks:
Clip fuel injectors in Special Tool 13 6 205 (injection pipe).
Keep to sequence of cylinders.

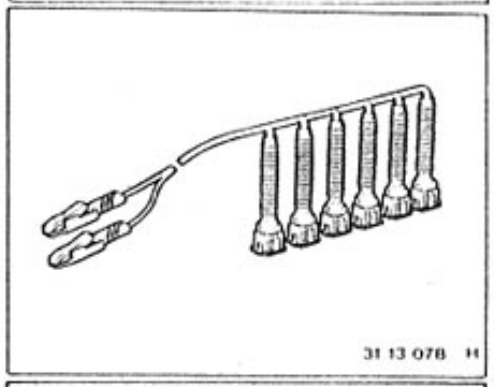

Connect Special Tool 13 6 206 (wire harness).
Supply 3 bar pressure to the fuel injectors.

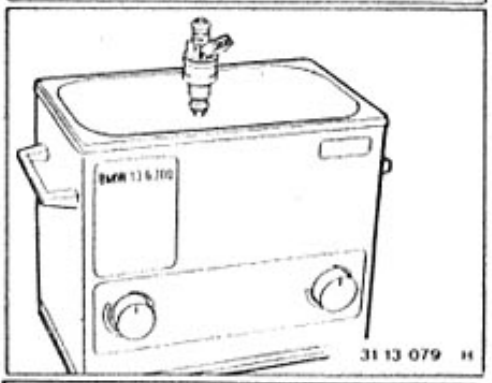

To remove residual fuel from fuel injectors, connect wire harness on 12 V battery.
Pull wire plugs off of fuel injectors.
Set air pressure to 3 bar again.
Place fuel injectors with injection pipe in a suitable tank filled with hot water (60 ... 80° C).
Check for air leaks.
Permissible leak rate = two air bubbles per fuel injector in 15 seconds.
Note fuel injectors with greater air leak rate.

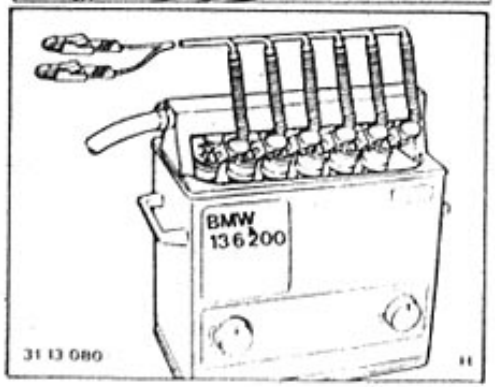

Take fuel injectors out of the water.
Remove air pressure connections.
Dry plug connections of fuel injectors with compressed air.

Cleaning Fuel Injectors:
Connect wire plugs of Special Tool 13 6 206 (wire harness) on fuel injectors and connect wire harness on 12 V battery.

Suspend fuel injectors with Special Tool 13 6 205 (injection pipe) in ultrasonic cleaner (Special Tool 13 6 200).

Clean and simultaneously supply current to fuel injectors in accordance with operating instructions of the cleaning machine.

Repeat leak test.

Important!
Don't carry out leak test in cleaning fluid, but instead only in a water bath.

13 64 541 Replacing all injector valves (M73)

Switch off ignition.

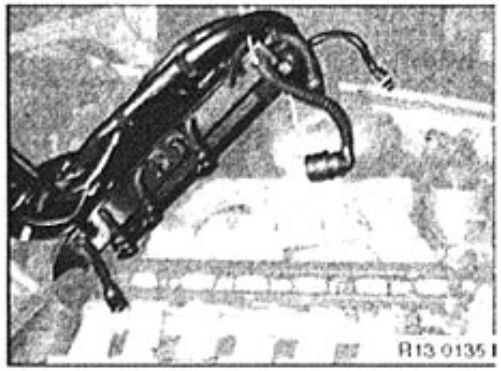

Unfasten engine wiring harness from engin and lift upwards, tying up on engine lid. Remove engine wiring harness, refer to 61 11 051.

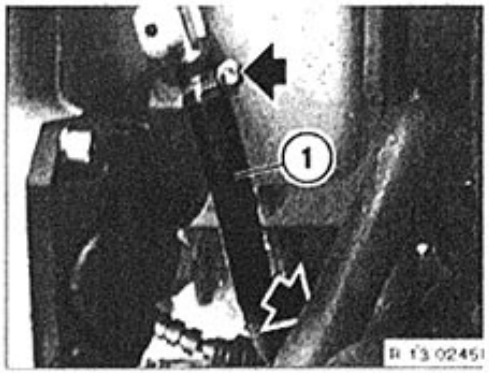

Unfasten hose clips. Remove fuel delivery hose (1).

Caution!
The fuel in the line is under pressure (approx. 3 bar). Catch escaping fuel with suitable receptacle and dispose of it correctly.

Installation:
The fuel hoses and hose clips must be replaced!

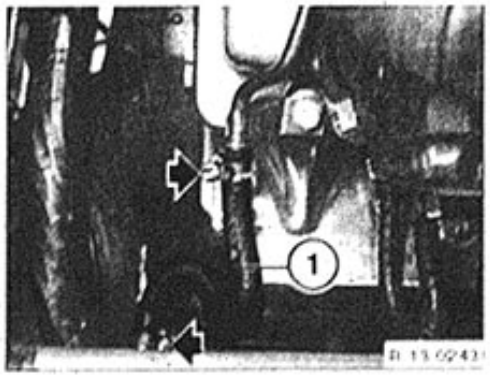

Unfasten hose clips. Remove fuel return hose (1).

Caution!
Fuel in line is under pressure (approx. 3 bar). Catch escaping fuel in suitable receptacle and dispose of it correctly.

Installation:
Fuel hoses and hose clips must be replaced!

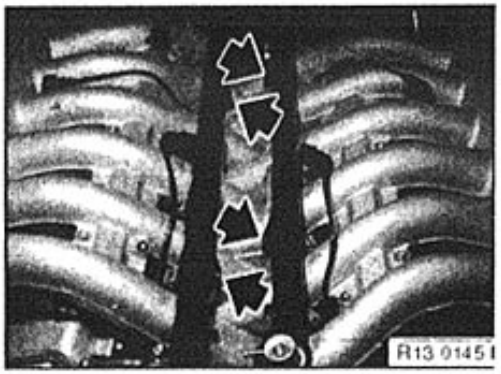

Unfasten screws. Remove injector strip together with injector valves.

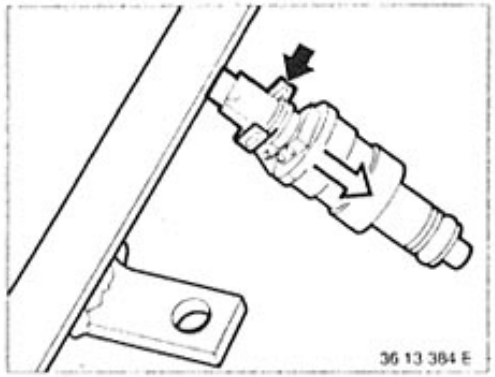

Unclip retainer.
Remove injector valves.

Installation:
Check seals on injector valves and replace if necessary.

Before installing the injector valves, coat seals with acid-free grease.

Check injector valves for leaks and clean, refer to 13 63 582.

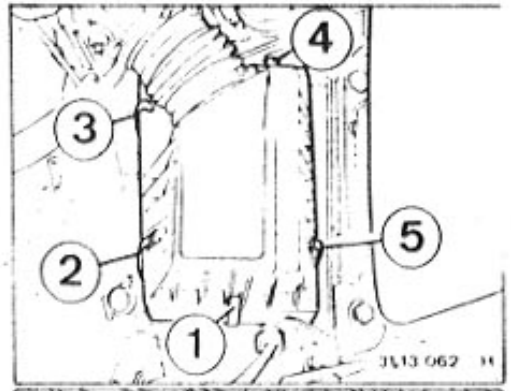

13 72 002 REPLACING AIR FILTER CARTRIDGES (BOTH)

Open clips (1...5).

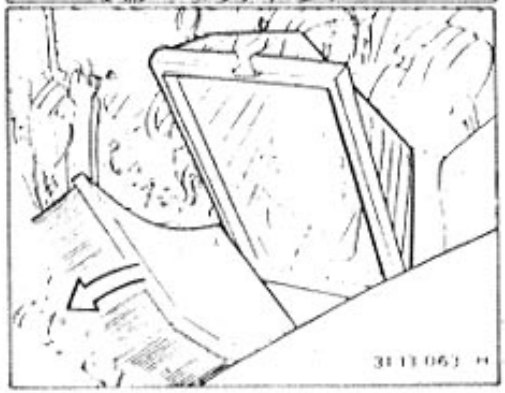

Lift upper section.
Take out air filter cartridge.

When replacing an air filter cartridge, it is always necessary to removed deposits of dirt from the corresponding intake manifold.

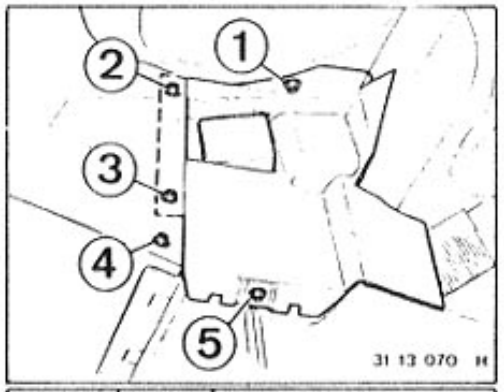

Cleaning Intake Manifold:

Unscrew screws (1...5).

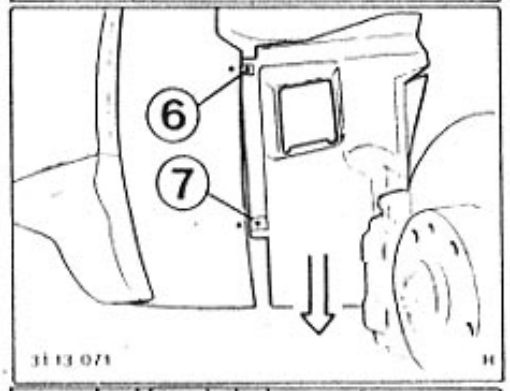

Pull off cover.

Installation:
Note self-tapping screws (6 and 7).
Insert air duct and guides correctly.

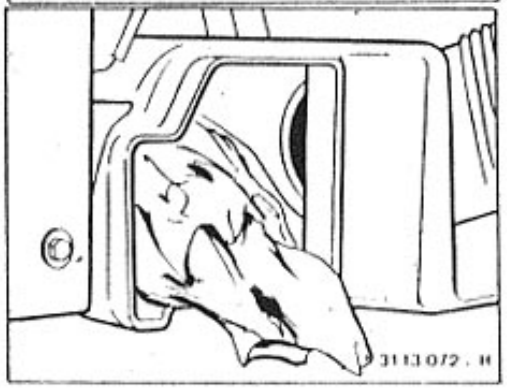

Wipe out lower manifold housing with a cloth which does not lose lint.

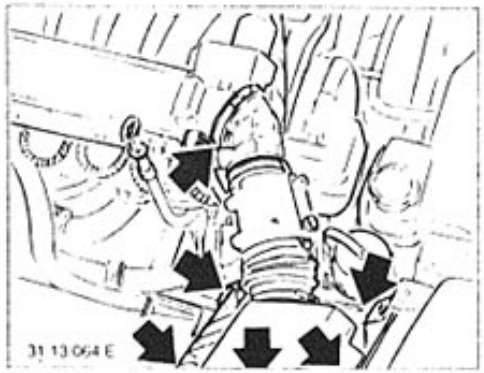

13 90 500 REPLACING TANK VAPOR VENTING VALVE

Check function - refer to 13 00 002.
Remove left air volume meter together with intake bellows and upper filter section.

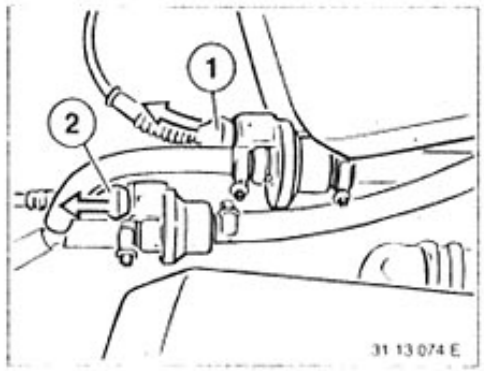

Squeeze retainers and pull off plugs.

Important!
Don't mix up plugs — mark them if necessary.

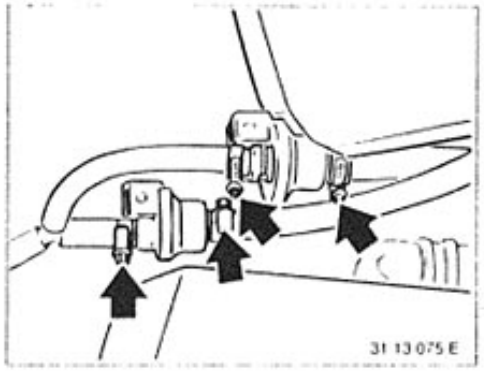

Disconnect fuel hoses, catching any escaping fuel.

ARRANGEMENT OF TANK VAPOR VENTING VALVES
(View Opposite Forward Direction)

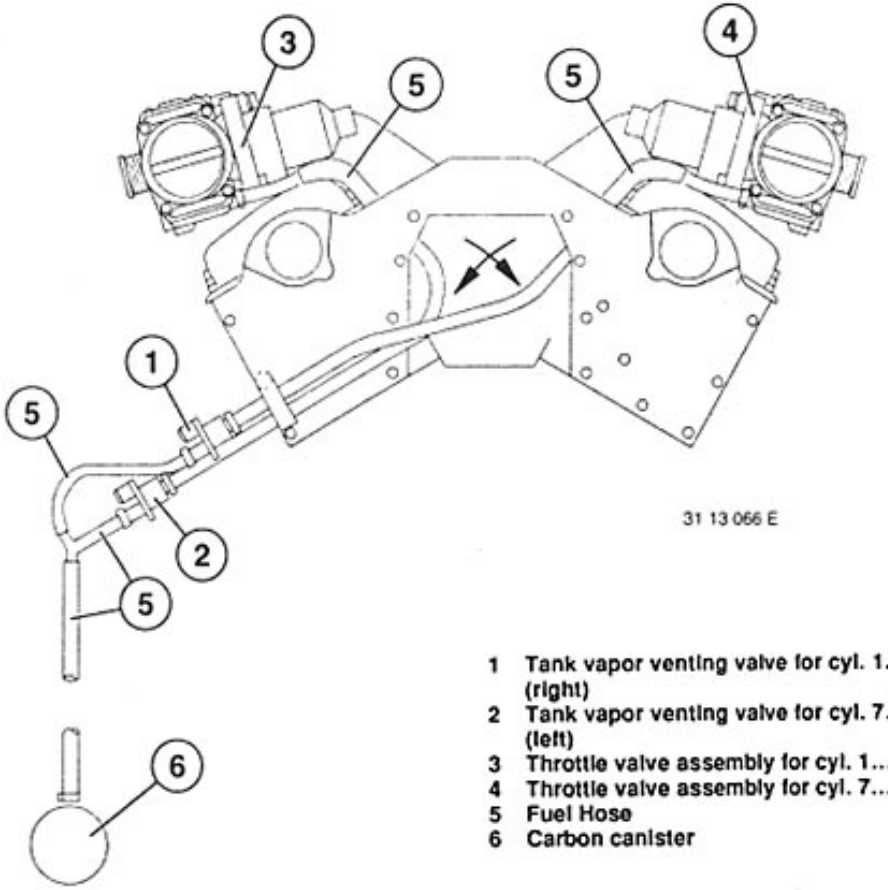

1 Tank vapor venting valve for cyl. 1...6 (right)
2 Tank vapor venting valve for cyl. 7...12 (left)
3 Throttle valve assembly for cyl. 1...6
4 Throttle valve assembly for cyl. 7...12
5 Fuel Hose
6 Carbon canister

13 90 ... Checking tank venting valve

Attach vacuum hose (1) of BMW Service Tester to the 8 mm dia. neck.
Provide the tank venting valve with a 12 V power supply (2) (special tool 61 1 440).

Select multimeter function 21 on BMW Service Tester.
Set vacuum to 600 mbar · 100.
Switch off vacuum pump.

During the measuring period of approx. 20 seconds, pressure must not drop by more than 50 mbar.
If pressure falls by more than 50 mbar, a new tank venting valve must be fitted.

13 90 500 Replacing tank vent valve (M73)

Switch off ignition.

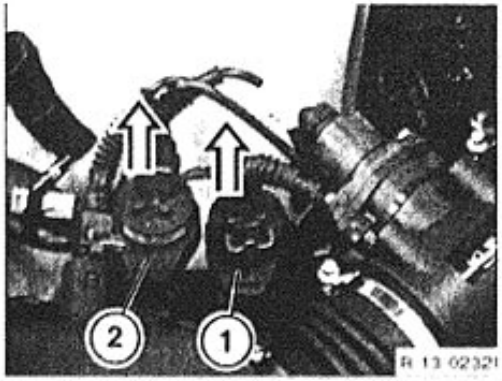

To prevent plug connections becoming confused on the two tank vent valves, mark them before dismantling the plug connections. Disconnect plug connections.

1 Tank vent valve 1
for cylinder bank 1-6
2 Tank vent valve 2
for cylinder bank 7-12

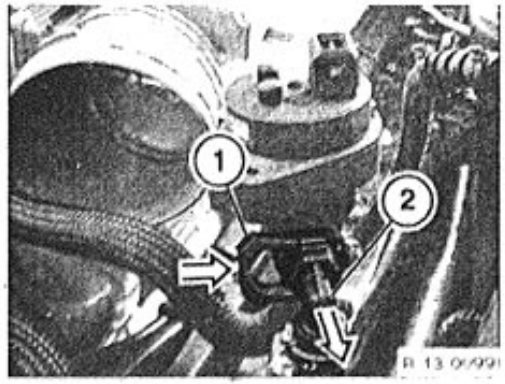

Open fast-release coupling on tank vent valve, press down interlock (1) and remove hose (2). Remove tank vent valve from bracket. Unfasten hose clip. Remove hose.

Installation:
Replace hose clip.

Interrogate fault memory of control unit on Digital Motor Electronics, rectify faults and clear the fault memory.

13 Fuel System M60

For additional work, refer to “Repair Instructions Series 7 E38”

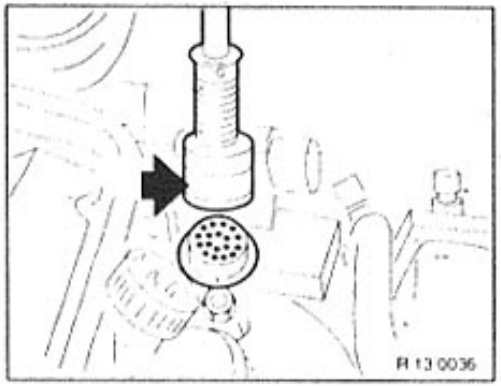

13 00 002 Checking function of digital motor electronics (DME)

Connect BMW Service Tester
Carry out brief test
Interrogate fault memories
Interrogate status
Refer to: operating instructions for BMW Service Tester / BMW diagnosing system:

Additional instructions on troubleshooting - refer to:
Electrical Troubleshooting Manual for the 8 Series E31.

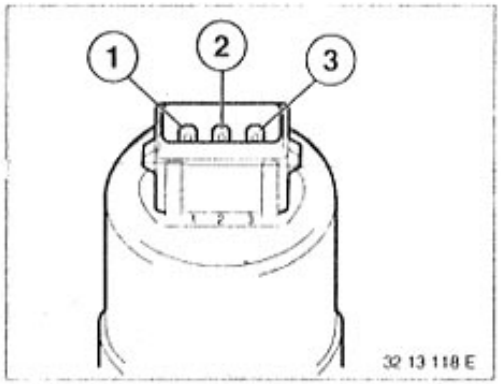

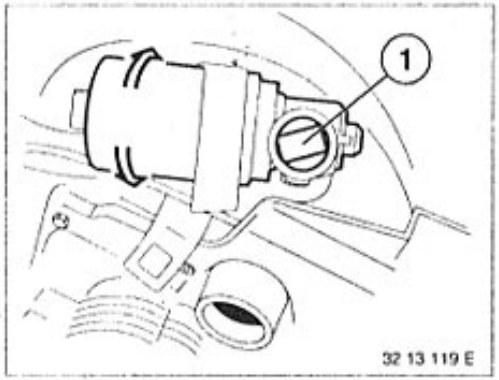

13 00 ... Checking components

Checking idle speed control valve

Electrical check

Measure resistance between terminal (1) and (3), nominal value of approx. 23 Ω
Measure resistance between terminal (2) and (1) or (2) and (3).
Nominal values of approx. 12 Ω respectively

Dynamic check

Remove idle speed control valve (connector remains attached).
Completely open or close rotary piston (1).
Switch on ignition.
Rotary piston must adopt and maintain a position of approx. 50 % cross section aperture.
For additional tests, refer to BMW Diagnosing System.

Checking temperature sensor for intake air

Check resistance value* on temperature sensor. Check leads from control unit connector to temperature sensor connector for interrupts and short-circuits**.

* Refer to Technical Data Gr. 12/Gr. 13
** Refer to Schematics for the 8 Series E31

Checking coolant temperature sensor

Attach Jetronic test cable 61 1 440.
Use ohmmeter to check nominal value*) and, to check the entire temperature range, remove the sensor, immerse up to hex head in water bath and check with an ohmmeter*).

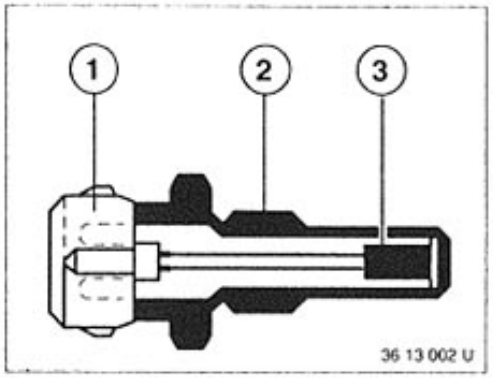

The temperature sensor measures the engine temperature and transmits this to the control unit as a resistance value.
The resistance value falls as the temperature rises (NTC).
1 = Plug connector
2 = Housing
3 = NTC resistance

*) Refer to Technical Data Gr. 12/Gr. 13

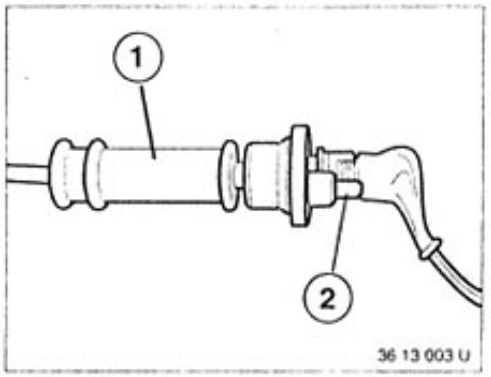

Checking tank vent valve

Connect vacuum hose (1) of BMW SERVICE TESTER to the 8 mm dia. neck.
Provide tank vent valve with 12 V voltage (2) (special tool 61 1 440).

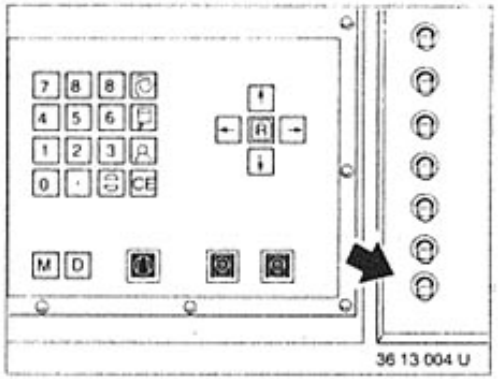

Select multimeter function 21 on BMW Service Tester.
Set vacuum to 600 mbar · 100.
Switch off vacuum pump.

During the measuring period of approx. 20 seconds, the pressure drop must not exceed 50 mbar.
If pressure loss exceeds 50 mbar, the tank vent valve must be replaced.

*) Refer to Technical Data Group 12/Group 13
**) Refer to Schematics folder

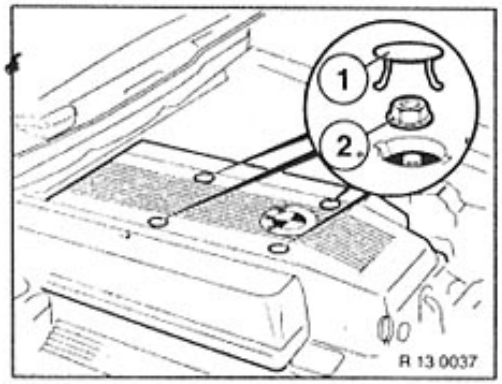

13 31 029 Checking fuel pump delivery pressure

Press off sealing caps (1) and unfasten nuts (2).
Remove cover for manifold.

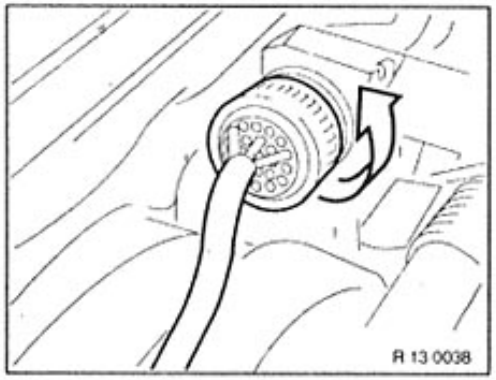

Twist engine cable connector and remove.

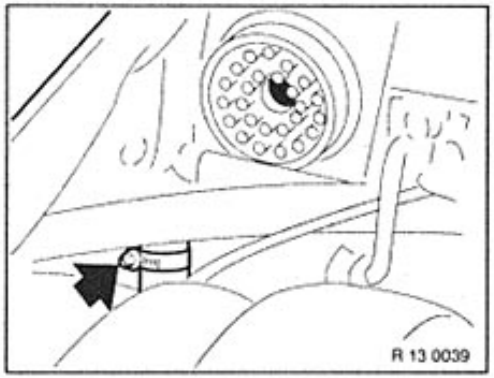

Install connection of BMW Service Tester or pressure gage 13 3 060 with connecting line and T-piece 13 3 064 in the fuel intake lead.

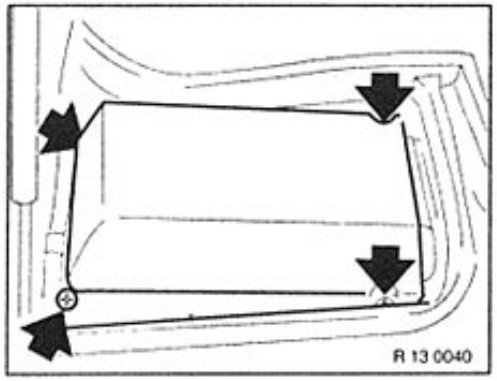

Unfasten screws.
Remove cover for E box.

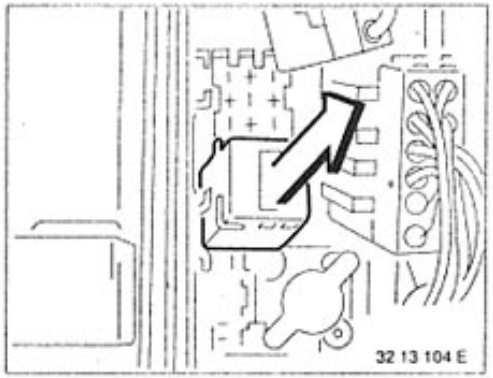

Install connectors and cables to one side.
Remove fuel pump relay (orange).

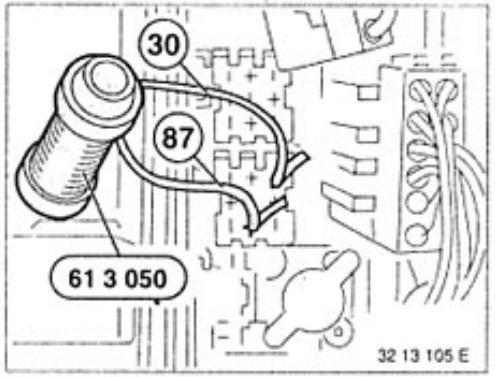

Use tool 61 3 050 to bridge terminal 87 and terminal 30. Switch on ignition, actuate tool.
Read off system pressure* and check.

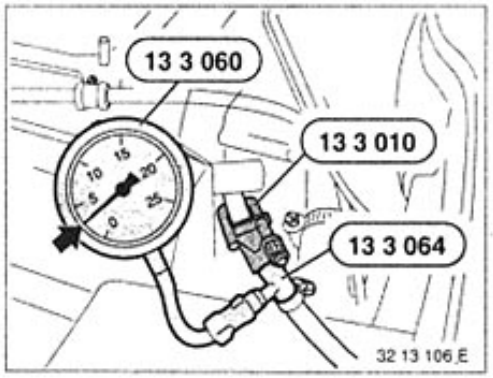

Check fuel delivery pressure:
seal fuel line after the T-piece with tool 13 3 010.
Switch on ignition. Actuate tool 61 3 050 and check fuel delivery pressure*.

* Refer to Technical Data, Group 16

Summary of fuel filter and lines

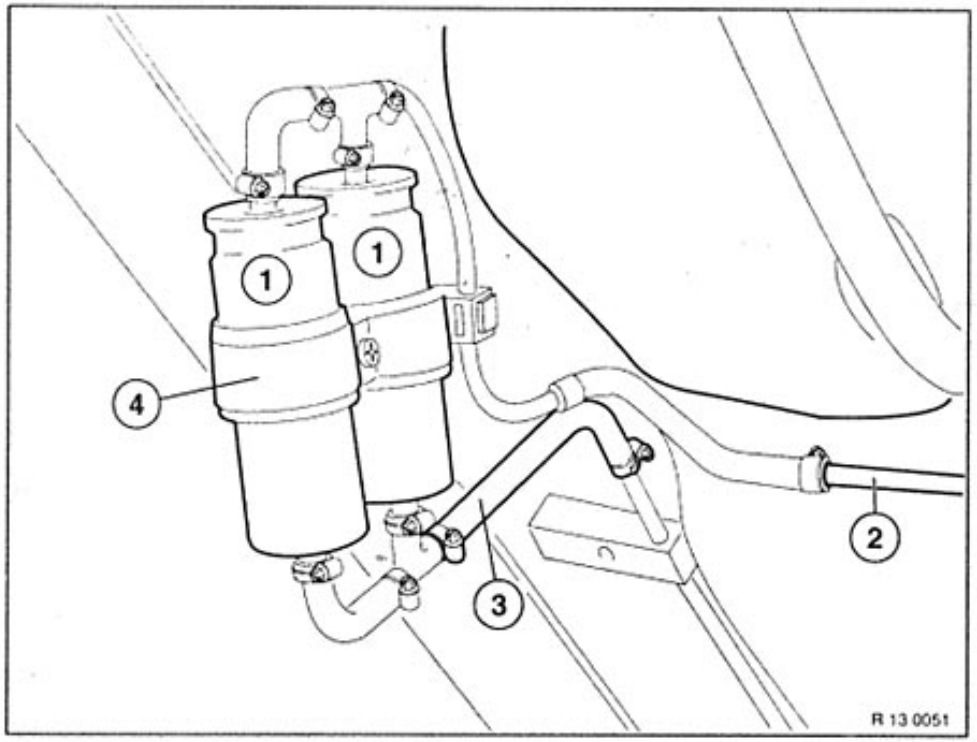

840 i

1 Fuel filter
2 Fuel line from tank
3 Intake line
4 Filter mount

13 32 051 Replacing fuel filter

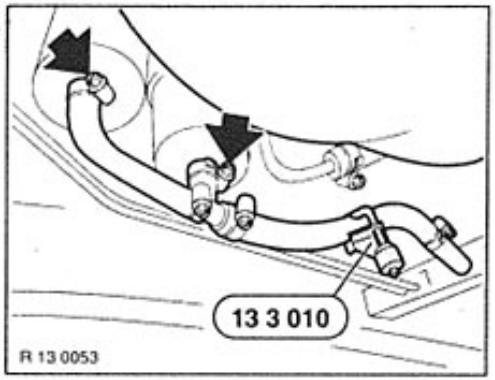

Disconnect retaining clips from lines on the body as much as necessary.
Seal fuel hoses with special tool 13 3 010.
Remove lower hoses.
Caution!
Catch escaping fuel and dispose of correctly.

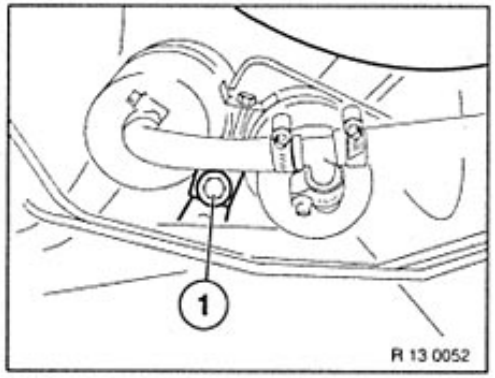

Unfasten screw (1) from filter mount.

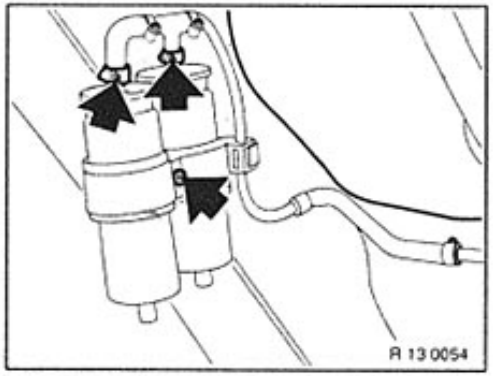

Remove hoses from fuel filter.
Unfasten retaining nut and remove filter.

Caution!
Catch escaping fuel and dispose of correctly.

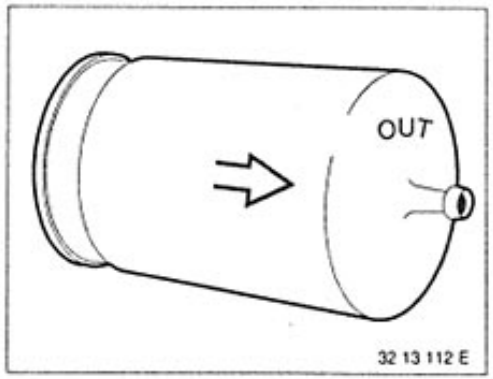

Installation:
Note direction of flow (arrow), or (OUT) outlet.

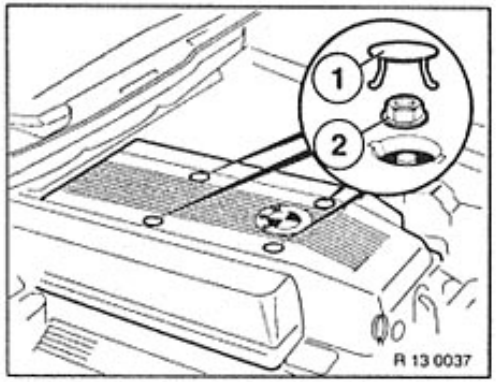

13 41 500 Replacing idling control valve

Press off sealing caps (1) and unscrew nut (2).
Remove manifold cover.

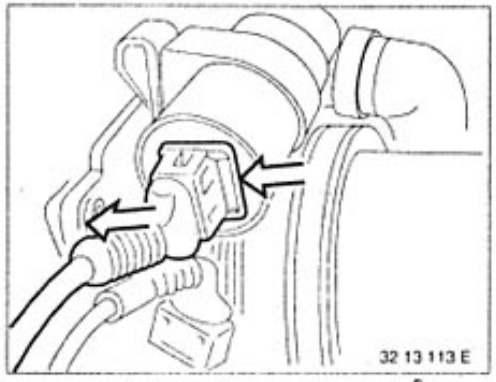

Compress retaining spring and remove connector.

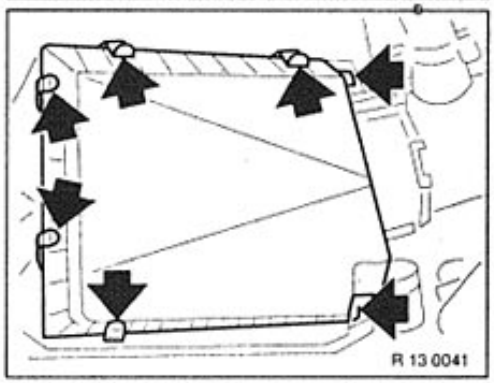

Open clips and lift out upper section of air filter housing.

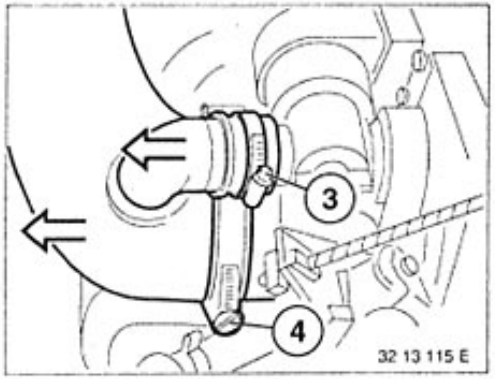

Unfasten hose clips (3 and 4).
Remove intake hoses with upper section of air filter housing.

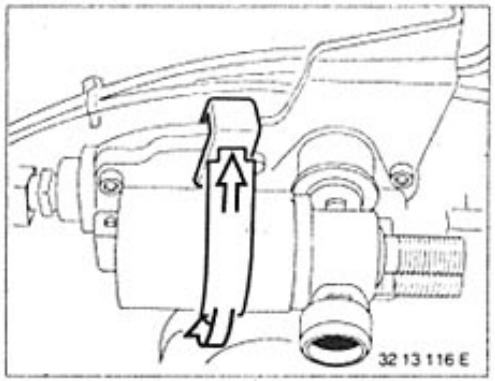

Compress retainer and disconnect.
Remove idling speed control valve.

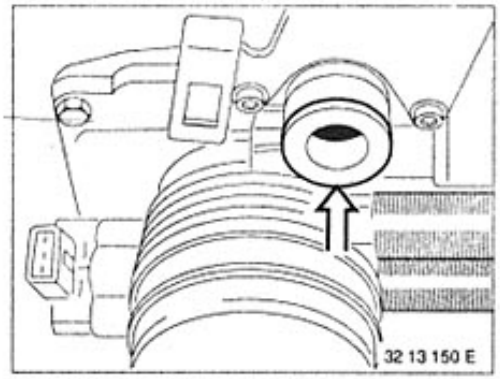

Installation:
First install seal in throttle valve flange.

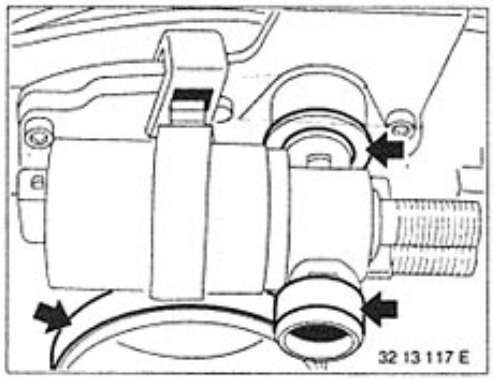

Installation:
Note seals on throttle body and on idling speed control valve.

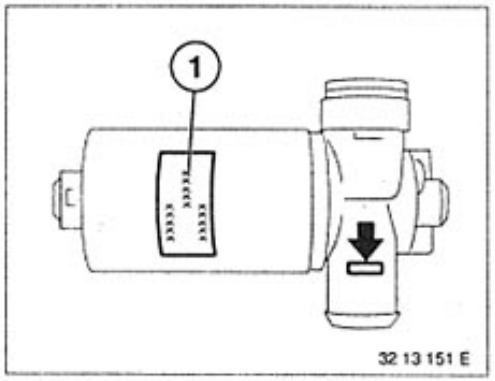

Installation:
Check code (1)*.
Check idling speed.

Component inspection, see 13 00 ...

* Refer to Technical Data

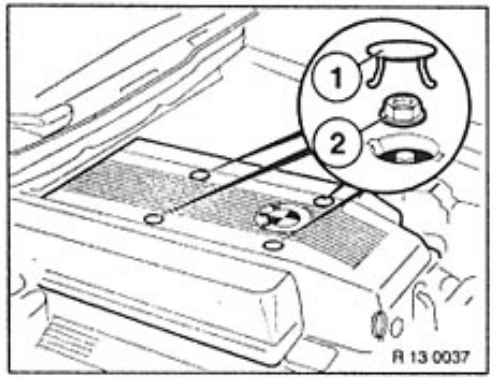

13 51 199 Checking fuel pressure regulator

Compress sealing caps (1) and unfasten nuts (2).
Remove manifold cover.

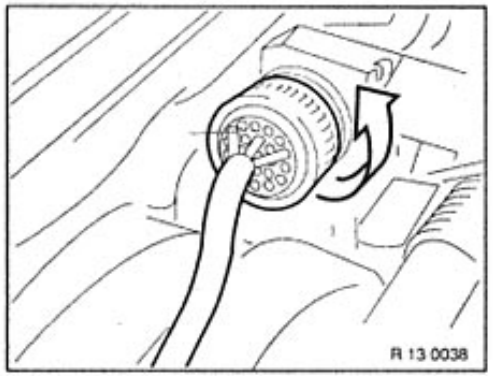

Turn and remove engine cable connector.

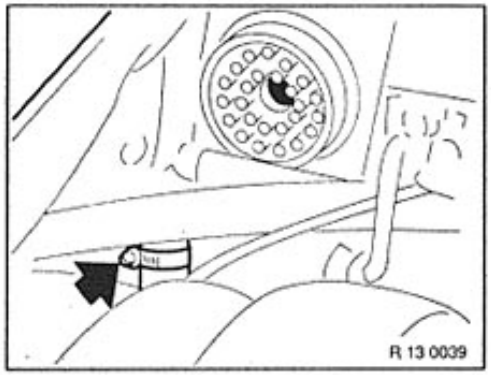

Install BMW Service Tester or special tool 13 3 060 with connecting line and special tool 13 3 064 in the fuel feed line.

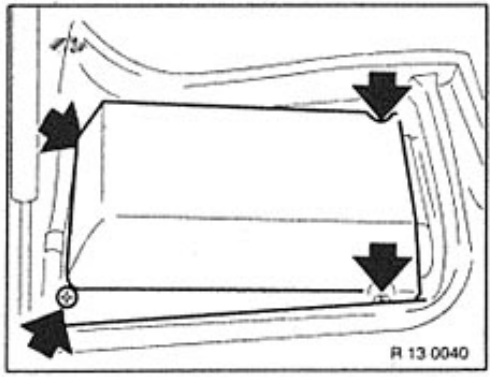

Unfasten screws.
Remove cover from E box.

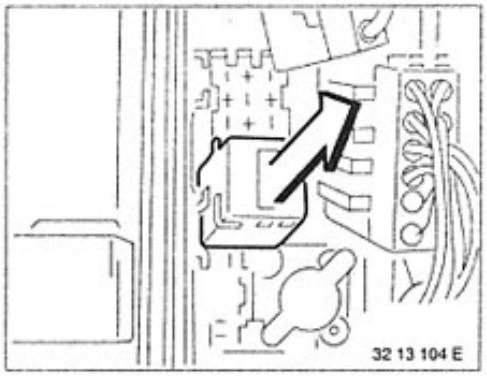

Place connector and cable to one side.
Remove fuel pump relays (orange).

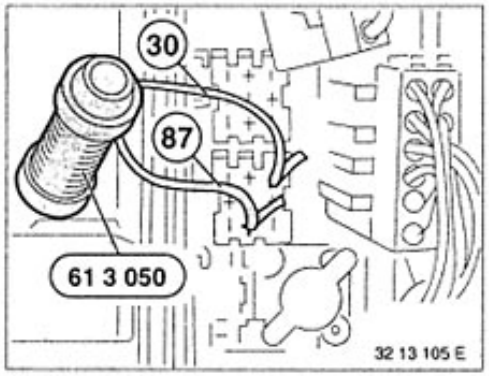

Use special tool 61 3 050 to bridge terminals 87 and 30. Switch on ignition and actuate special tool.
Read off and check injection pressure*.

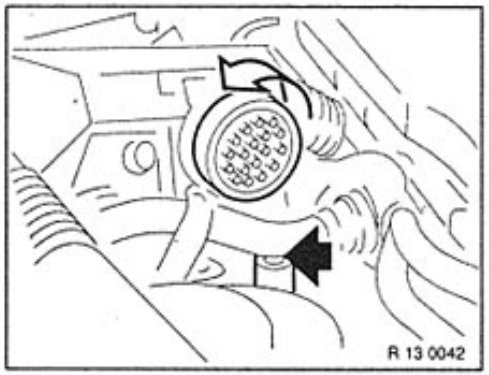

If the injection pressure* drops too fast:
Twist and remove engine cable connector on right side. Plug return line after pressure regulator with special tool 13 3 010.
Actuate special tool 61 3 050 briefly once again.

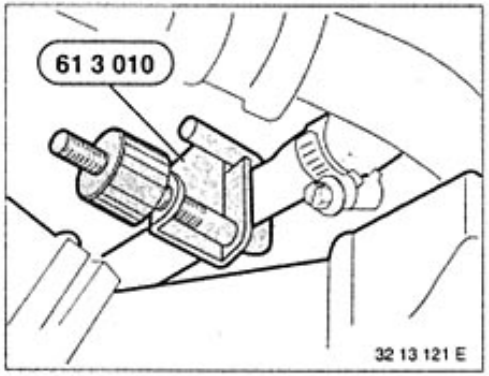

If the injection pressure now remains constant, the pressure regulator is faulty.
If the injection pressure drops, there is a leak before the pressure regulator (injection tube, hose connections, injection valves etc.).

* Refer to Technical Data Group 16

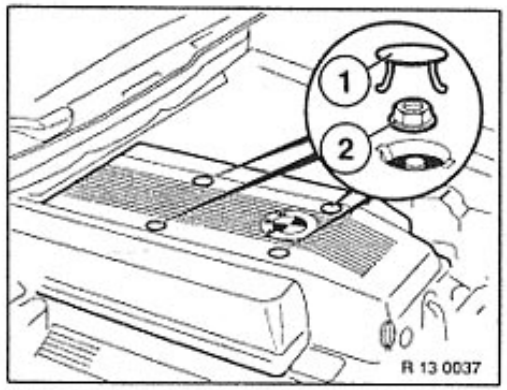

13 51 630 Replacing fuel pressure regulator

Press off sealing caps (1) and unfasten nuts (2).
Remove manifold cover.

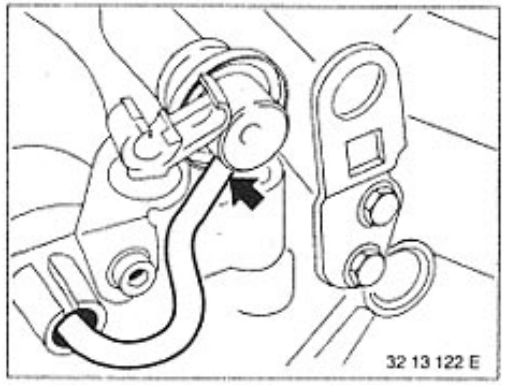

Remove vacuum hose.

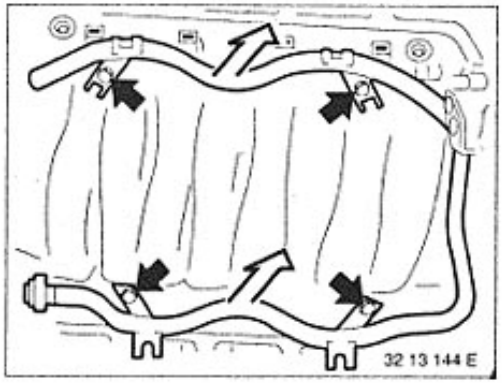

Replace all injection valves, see: 13 64 541.

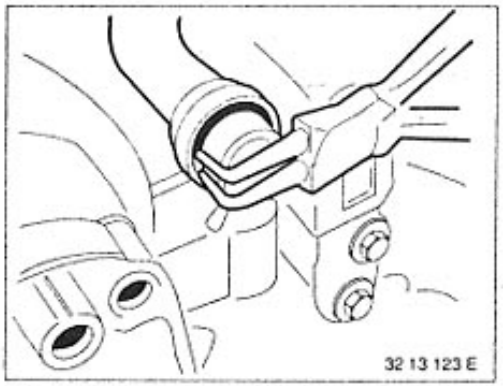

Lift out retaining ring.

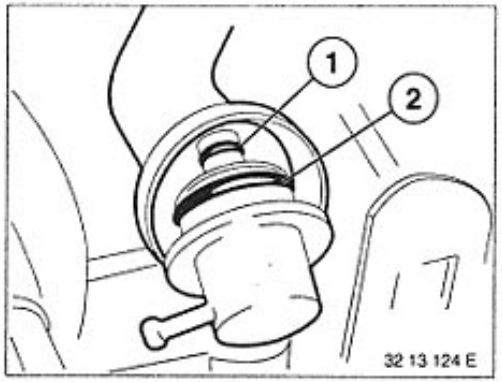

Note and mark position of vacuum connection.
Twist and remove pressure regulator.

Installation:
Fit new seals (1 and 2).

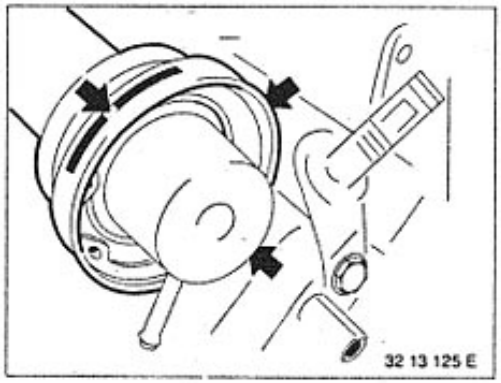

Installation:
Allow lugs on retaining ring to locate in the recesses.

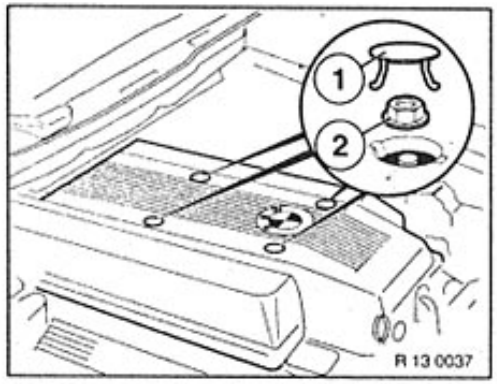

13 54 030 Removing and installing / sealing throttle body

Press off sealing caps (1) and unscrew nuts (2).
Remove manifold cover.

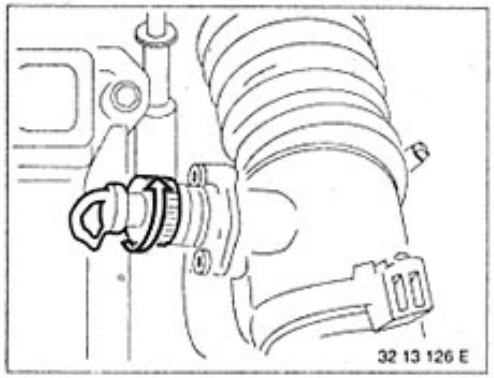

Twist and remove plug connector for mass air flow sensor.

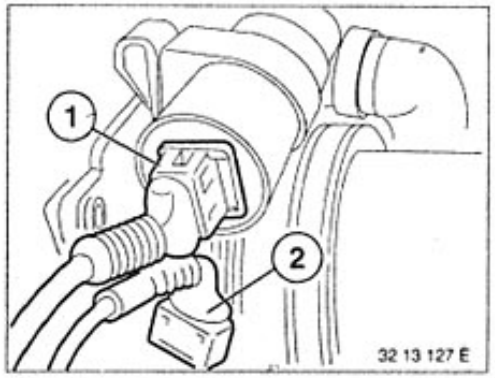

Remove connector (1) from idling speed control valve and (2) from throttle valve potentiometer.

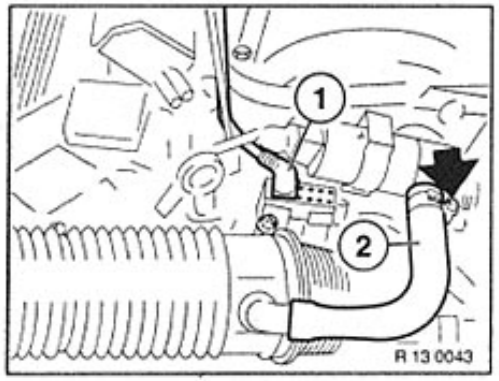

Remove connector from ASC throttle valve potentiometer. Remove idling speed hose.

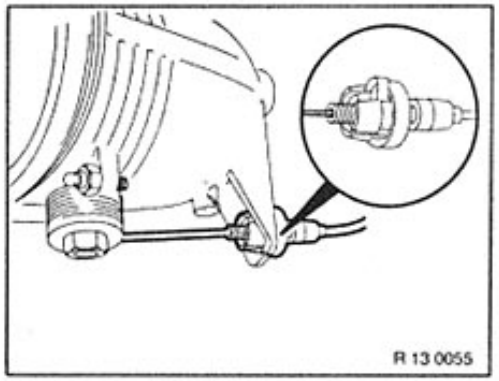

Press in plastic locking device and remove Bowden cable from ASC throttle valve.

Note:
ASC troubleshooting: refer to diagnosis program selection no. 50/55, fault memory.

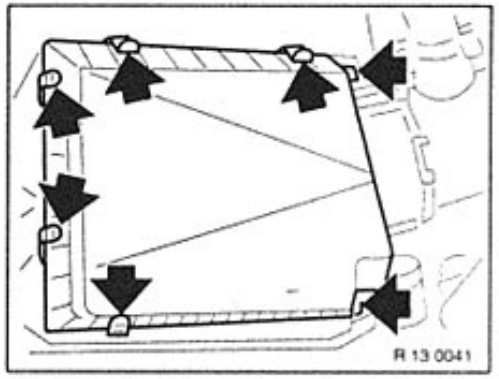

Open clips and lift up upper section of air filter housing.

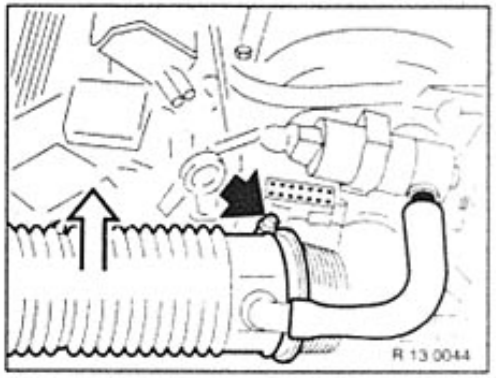

Unfasten hose connector and remove gaiter with upper section of air filter housing.

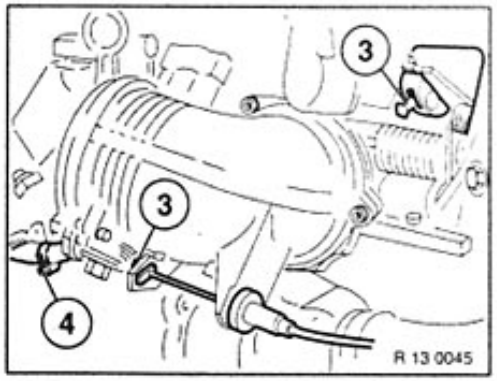

Remove accelerator cables (3).
Remove hose (4) from throttle body.

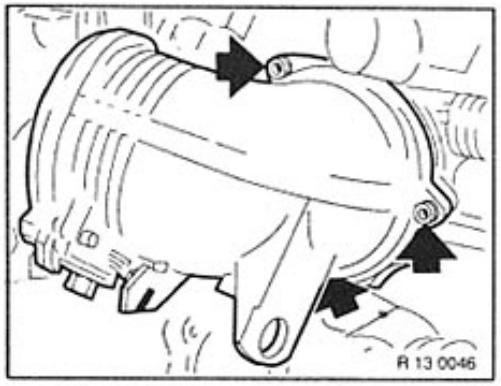

Unfasten screws and remove ASC throttle body.
Installation:
Fit new seal.

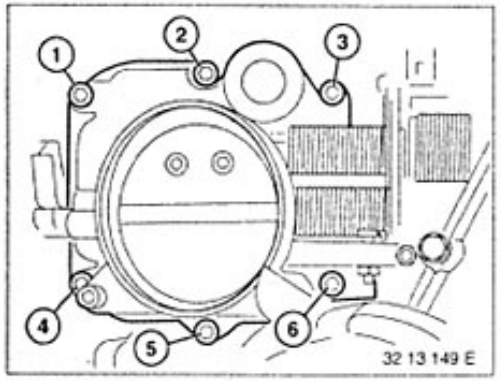

Unfasten screws (1...6) and remove throttle body

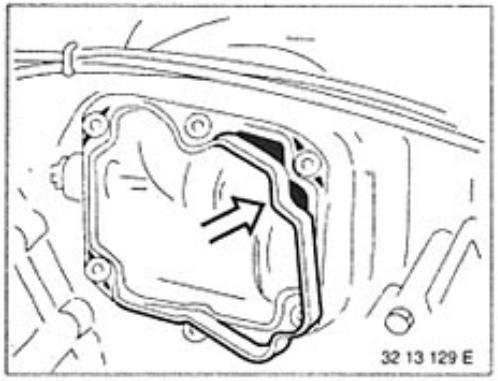

Installation:
Fit new gasket.

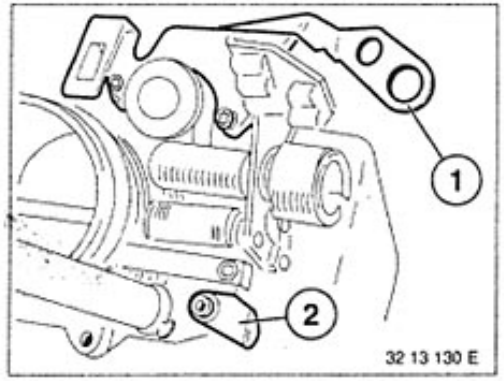

Installation:
Fit brackets (1 and 2).

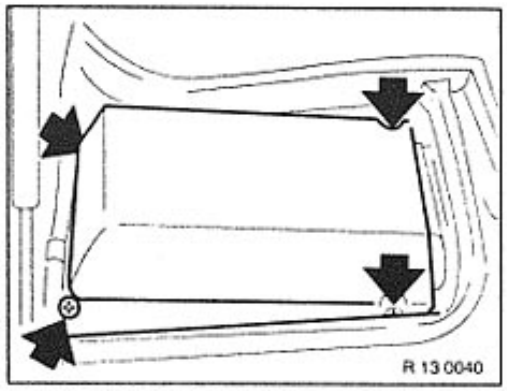

13 61 000 Removing and installing or replacing control unit (for DME)

Unfasten cover screws from E box.
Remove cover.

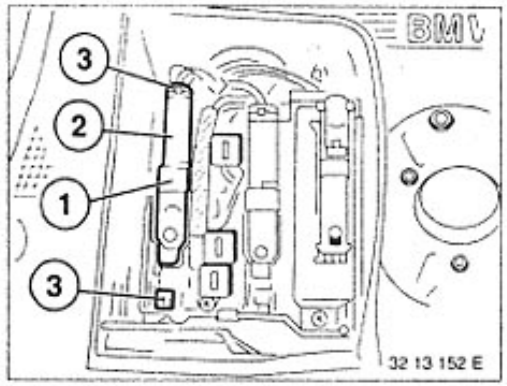

Lift up fuse (1) and remove connector (2).
Unfasten retaining clips (3) and remove control unit.

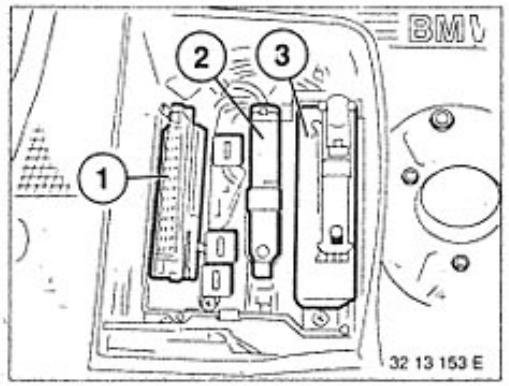

1 DME control unit
2 EGS control unit (automatic transmission)
3 ABS control unit

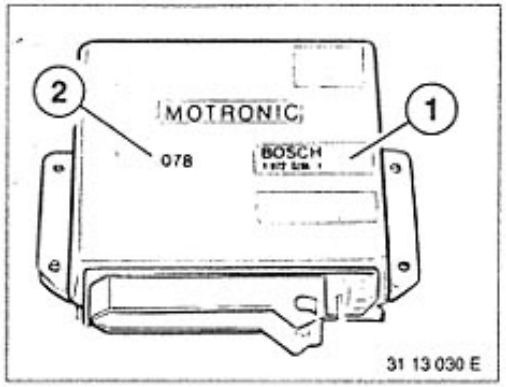

Installation:
Check code (1) *) and production date (2) *).

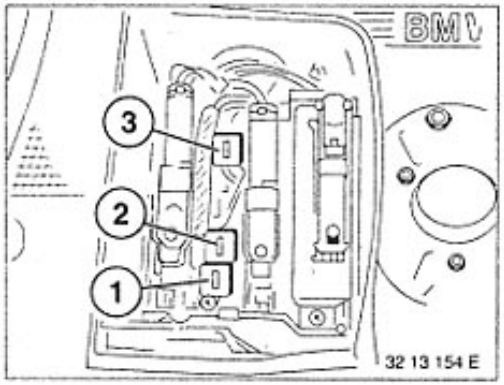

Relays in control unit for E box:
1 Fuel pump relay (orange)
2 DME main relay (white)
3 Lambda oxygen sensor heating (blue)

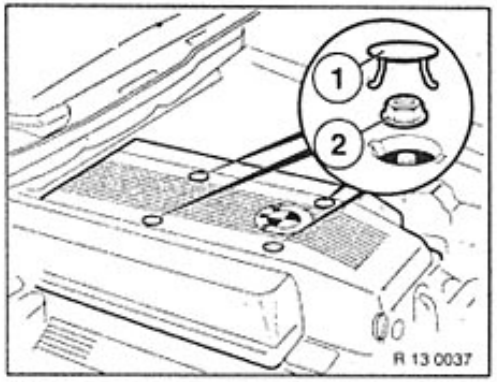

13 62 511 Replacing intake air temperature sensor

(After function check of Digital Motor Electronics (DME) 13 00 002).

Press off sealing caps (1) and unscrew nuts (2).
Remove manifold cover.

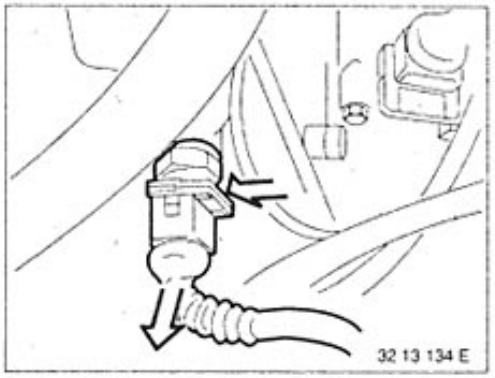

Compress retaining spring.
Remove connector.

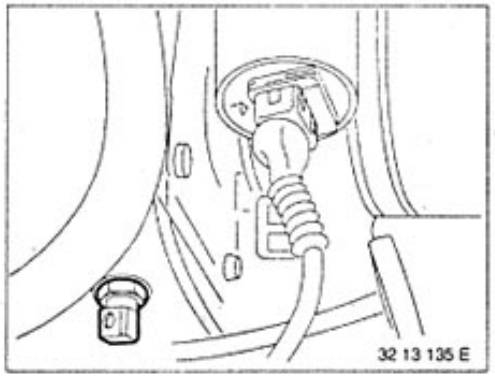

Unscrew and remove temperature sensor.

Installation:
Note tightening torque*.

Components check:
see 13 00 . . .

* Refer to Technical Data

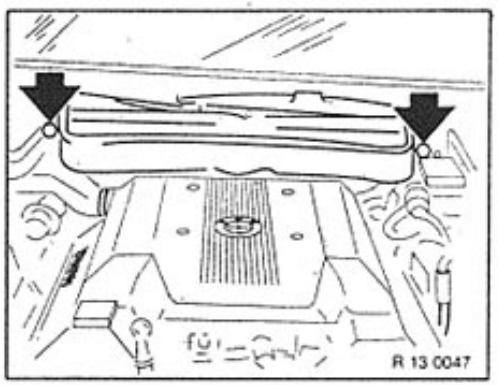

13 62 531 Replacing coolant temperature sensor

(After function check of the Digital Motor Electronics (DME) 13 00 002).

Remove air intake duct.

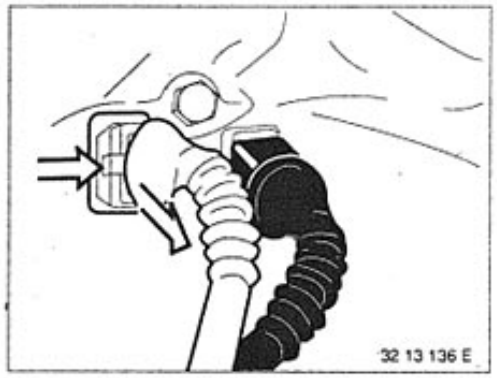

Compress retaining spring.
Remove connector (white).

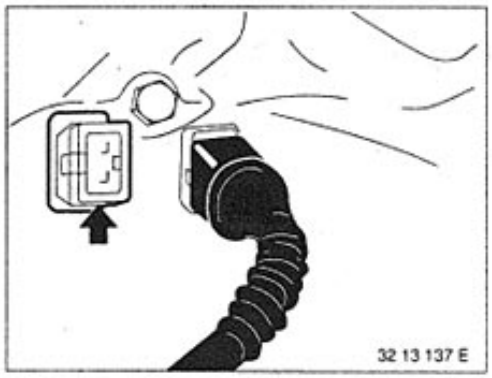

Unscrew and remove sensor.

Installation:
Note tightening torque *).

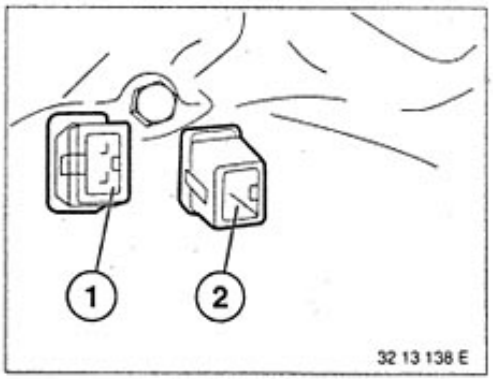

Layout:
1 DME temperature sensor (white)
2 Temperature sensor - remote thermometer (black)

Component check:
see 13 00 . . .

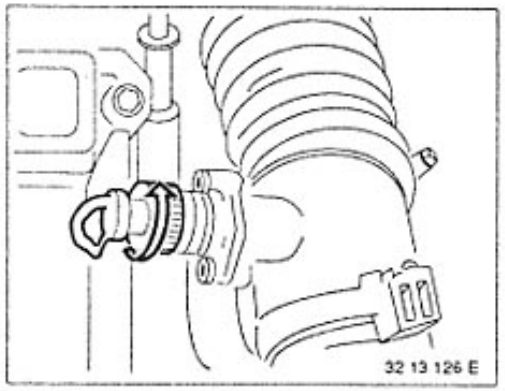

13 62 560 Removing and installing or replacing mass air flow sensor

(After function check of Digital Motor Electronics (DME) 13 00 002)

Twist and remove plug connection on mass air flow sensor.

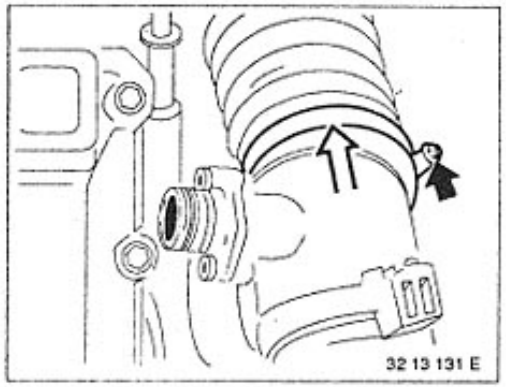

Unfasten hose connector and remove suction hose.

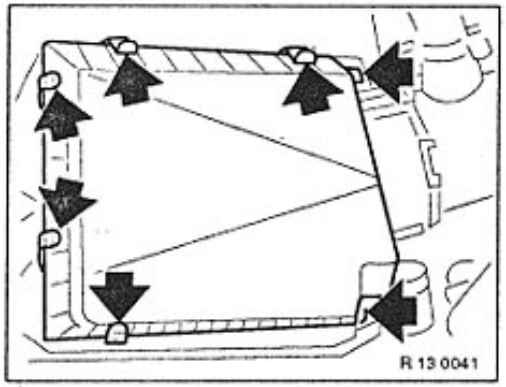

Open clips and lift off upper section of air filter housing together with mass air flow sensor.

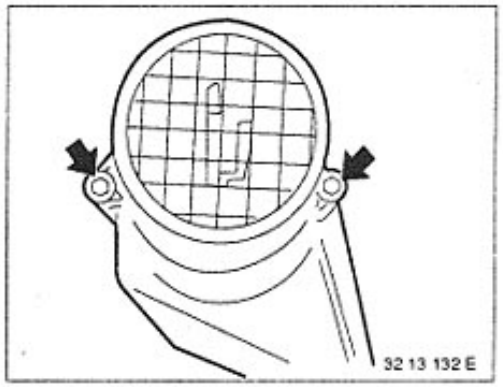

Unfasten screws. Twist and remove mass air flow sensor housing.

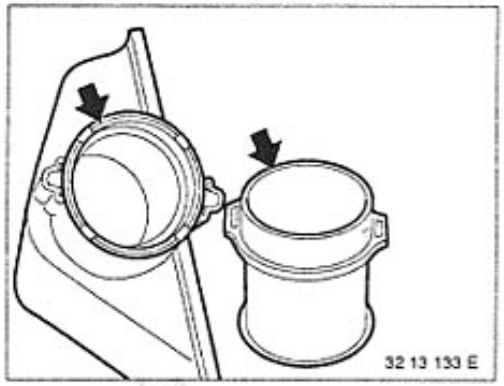

Installation:
Fit new seal. Coat sealing lip of housing with thin layer of acid-free grease.

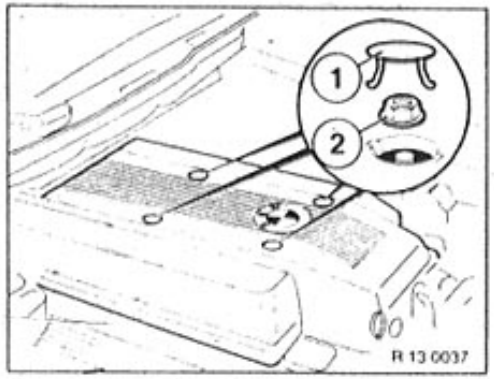

13 64 541 Removing and installing or replacing all fuel injection valves

Press of sealing caps (1) and unscrew nuts (2).
Remove manifold cover.

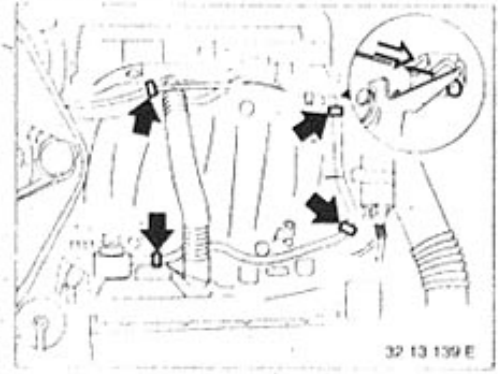

Remove ratchet tapes for cable retainer.
Disconnect accelerator cable from throttle valve lever.

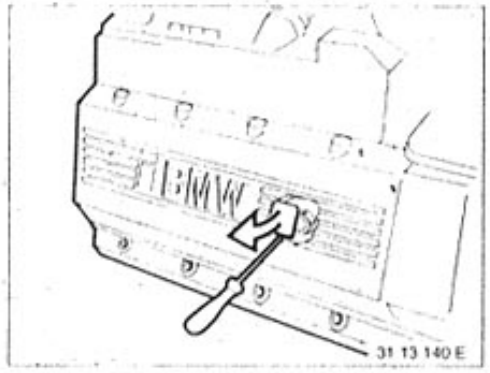

Remove cover for cylinder head covers from both sides.

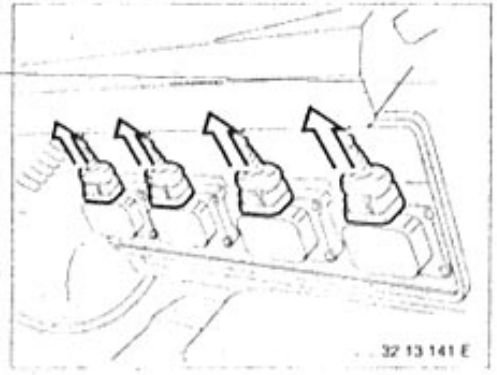

Remove cable connector from ignition coils on both cylinder heads.

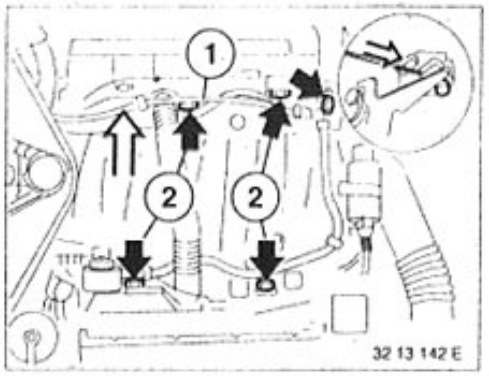

Unclip accelerator cable (1) and place to one side.
Remove cable ducts (2) and place to one side.
Remove connector from fuel injection valves.

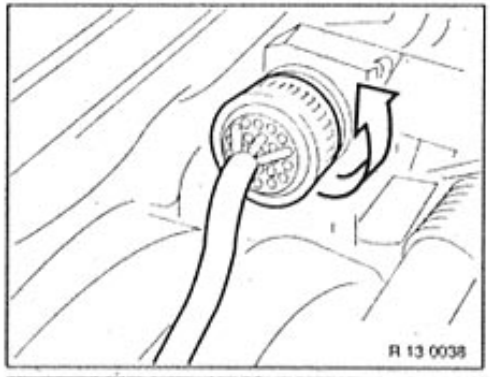

Turn and remove left and right engine cable connectors.

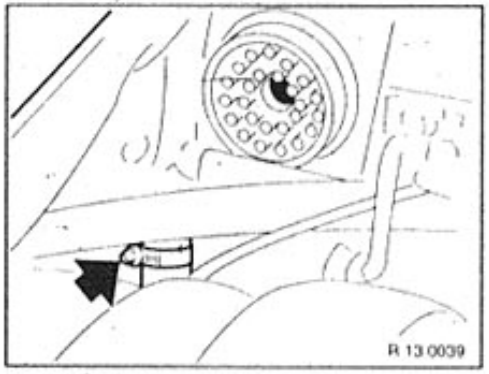

Plug fuel feed line with special tool 13 3 010 and remove.

Caution!
Catch escaping fuel.

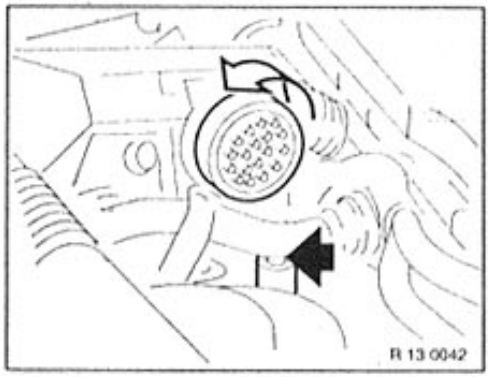

Plug fuel return line with special tool 13 3 010 and remove.

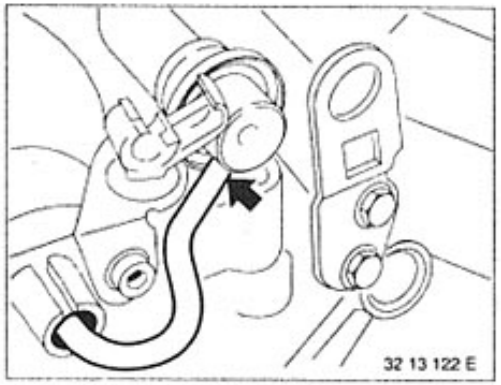

Remove vacuum hose from pressure regulator.

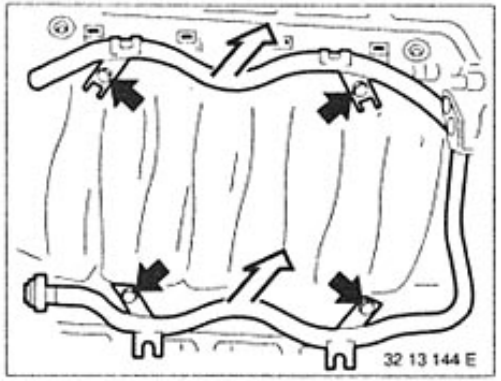

Unfasten injection pipe retainers. Remove injection tube with the fuel injection valves.

Press off clips. Remove fuel injection valves from injection pipe.

Installation:
Check seals and replace if necessary. Check injection valves for leaks and clean, see 13 64 582.
Coat seals used for installing the valves with acid-free grease.
When replacing the valves, check code no.*, color of connector housing* and production date.

* Refer to Technical Data

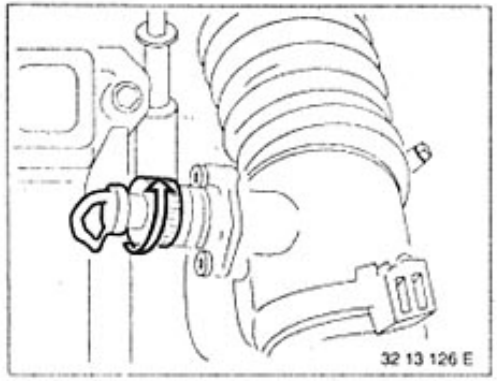

13 71 000 Removing and installing suction filter housing

Twist and remove plug connection for mass air flow sensor.

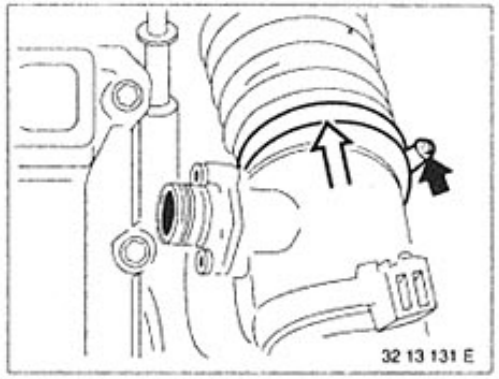

Unfasten hose clip.
Remove suction hose.

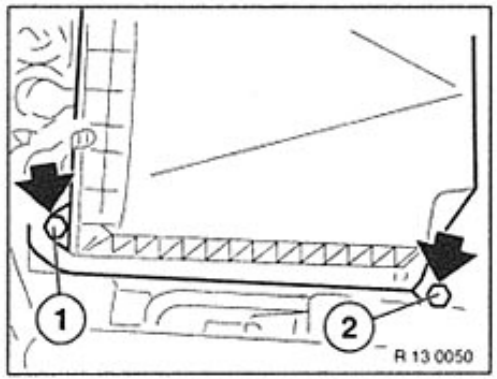

Unfasten screws (1 and 2).
Tilt filter housing and remove.

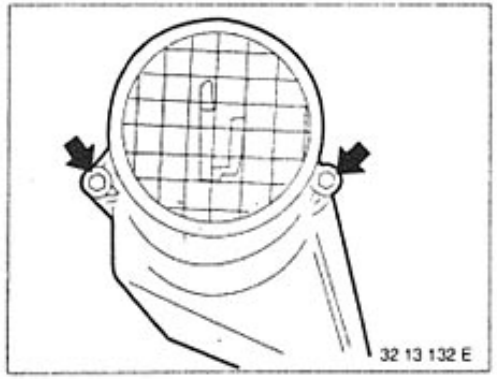

Unfasten screws. Twist mass air flow sensor housing and remove.

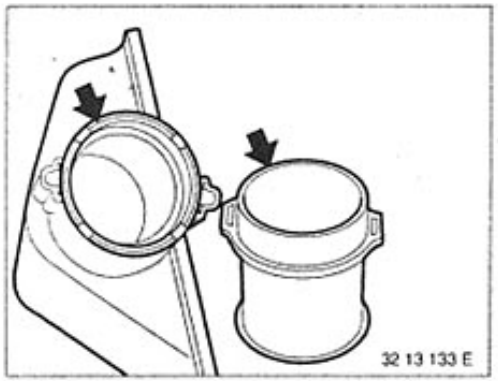

Installation:
Fit new seal. Apply a thin coat of acid-free grease to the sealing lip of the housing.

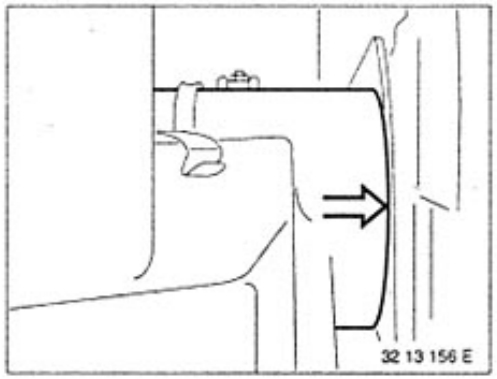

Installation:
Insert suction neck in the recess.
Fit the housing to the rubber mount.

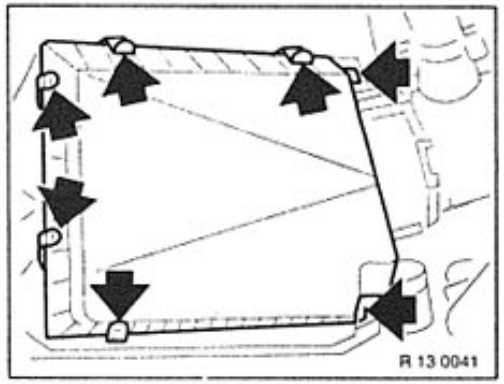

13 72 001 Replacing air filter insert

Open clips.

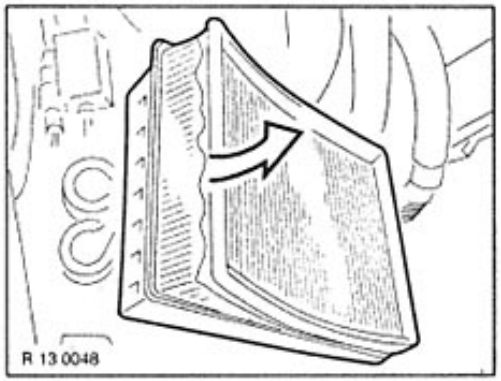

Lift upper section of air filter housing and remove air filter insert.

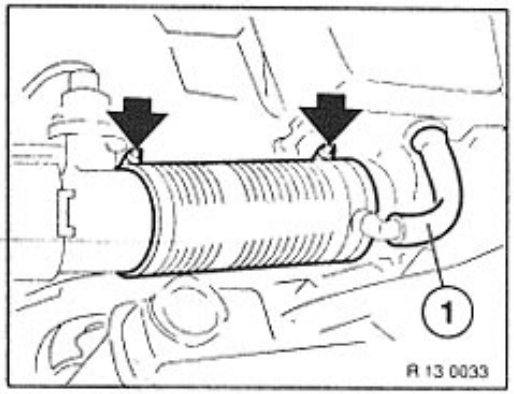

13 90 500 Replacing tank venting valve

(After function check of the Digital Motor Electronics (DME) 13 00 002).

Unfasten hose clip. Remove idle speed hose (1). Remove gaiter (2).

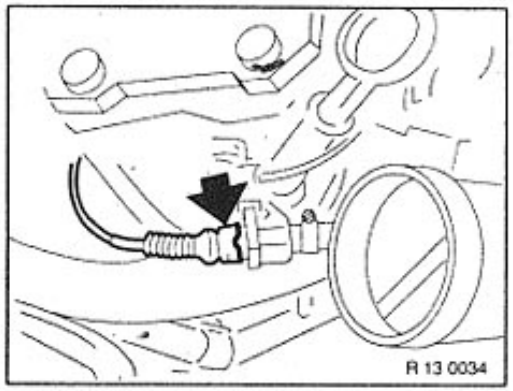

Compress retaining spring and remove connector.

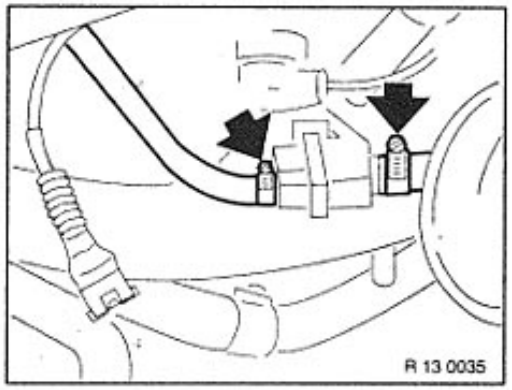

Remove fuel lines.
Caution!
Catch any fuel which may still be in system.

Slide tank venting valve out of rubber mount.
Components check, see 13 00 ...

16 Fuel supply system

Fuel tank survey

(Cut away and shown in opposite direction to direction of travel)

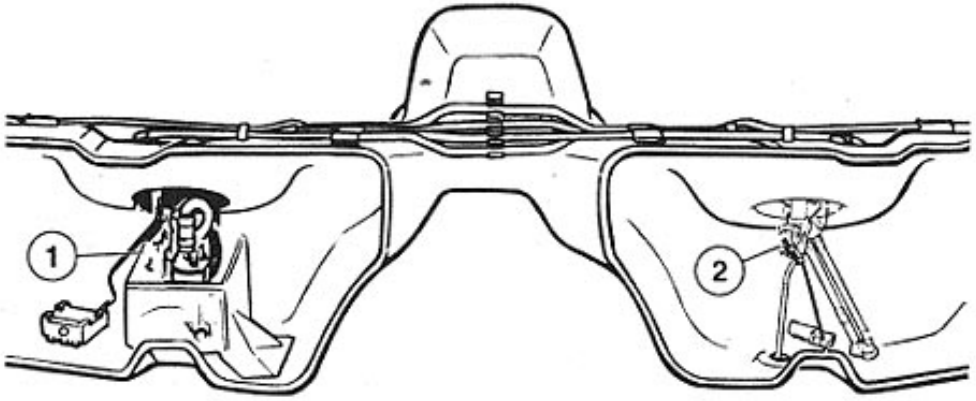

R 16 0001

1 = (right) Fuel pump sensor unit

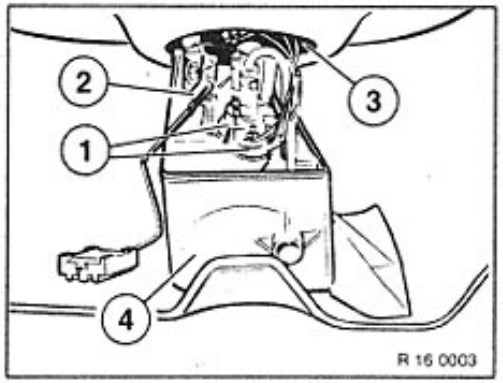

R 16 0003

2 = (left) Sucking jet pump sender unit

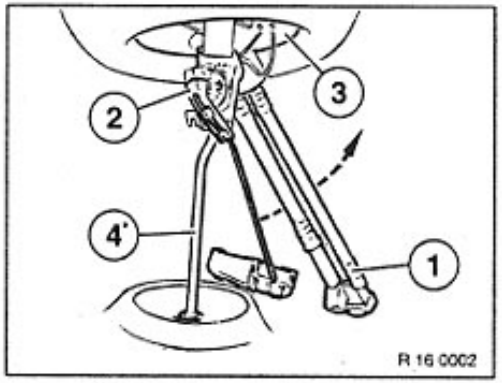

R 16 0002

1 = Fuel pump
2 = Swing-arm fuel level sender unit
3 = Tank flange
4 = Fuel baffle

1 = Sucking jet pump
2 = Swing-arm fuel level sender
3 = Tank flange
4 = Probe (for basic setting)

16 00 005 Draining and filling fuel tank

Remove ground lead from support point in trunk.

Caution!
Fault memories in control units are cancelled: if necessary, interrogate in advance.

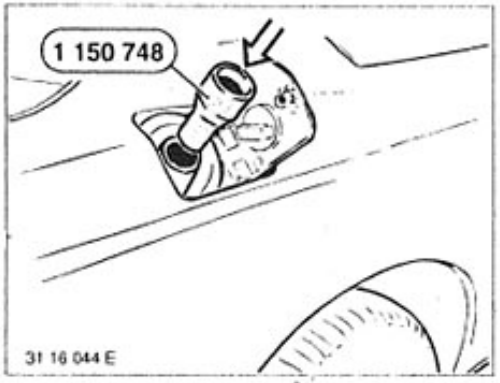

Installation:
Always use new hose clips.
Check fuel hoses for condition and leaks, replacing if necessary.
Also refer to Service Information, Group 16.

First install funnel (Parts No. 1 150 748) in filler neck.

Draw out as much fuel as possible with a scavenging pump**.

Caution!
Conform with safety regulations as well as local and national regulations.
Use suitable suction hose* and twist slightly when installing and when pulling back out.

* Refer to Workshop Equipment Service Information
** Refer to BMW Parts Service

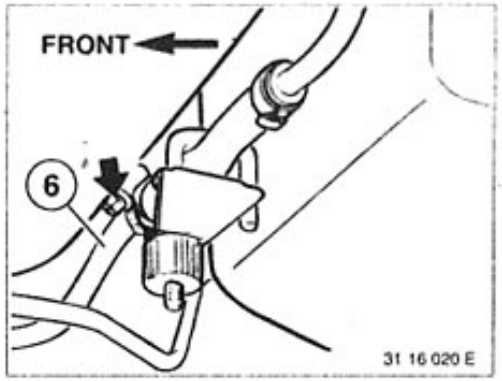

Disconnect return hose with special tool 13 3 010 and remove return hose (6). Connect fuel suction device*, open clamp and drain off left half of tank.

Caution!
Conform with safety regulations as well as local and national legislation.
Use suitable suction hose* and connection.

Draw off fuel vapors in vehicle*

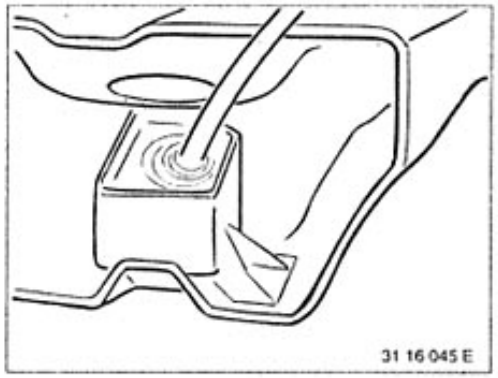

The tank can only be drained completely after removal of the sensor units (see 16 12 000/1), or after removal of the tank (16 11 030).

Installation:
Top up fuel with suction unit** through filler neck.

Caution!
Only slide hose approx. 40 cm into tank: on no account slide in as far as baffle plate.

* Refer to Workshop Equipment Service Information
** Refer to BMW Parts Service

16 11 030 Removing and installing fuel tank

Remove ground lead from connection in trunk.

Caution!
Fault memories in control units are cancelled: if necessary, interrogate first.

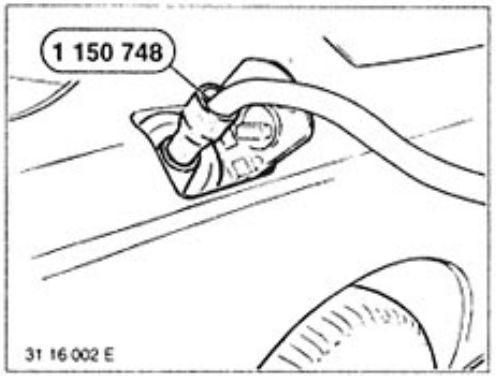

Draw off fuel with scavenging pump** as far as possible at the filler neck.

Caution!
Conform to safety regulations as well as national legislation.
Use suitable suction hose* and twist slightly when inserting and when removing.

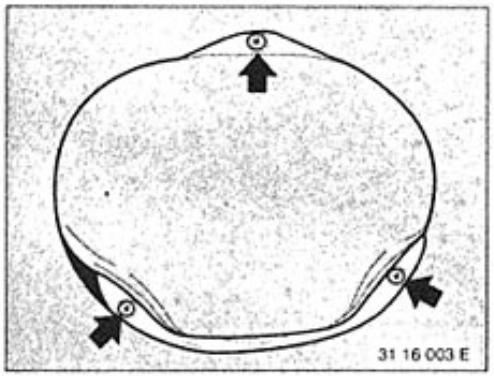

Installation:
Always use new hose clips.
Check fuel hoses for condition and leakage, replacing if necessary.
Also refer to Service Information Group 16.

Remove left and right rear seats.
Unfasten screws.
Remove left and right cover.

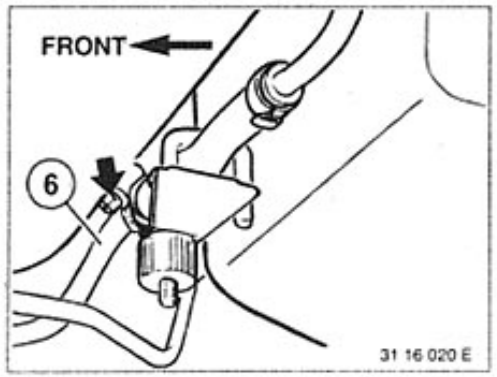

Disconnect return hose with special tool 13 3 010 and remove return line (6). Connect up fuel scavenging unit*, open clamp and drain left half of tank.

Caution!
Conform to safety regulations as well as national legislation.
Use suitable suction hose*.

* Refer to Workshop Equipment Service Information
** Refer to BMW Parts Service

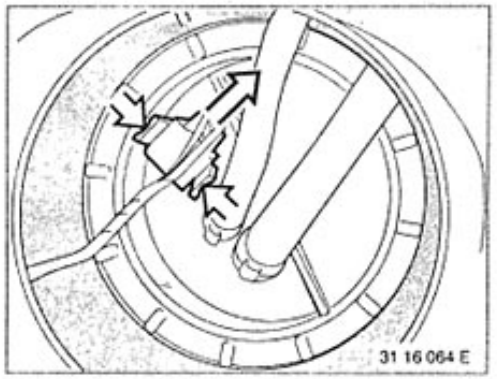

Remove connector for left swing-arm sender unit.

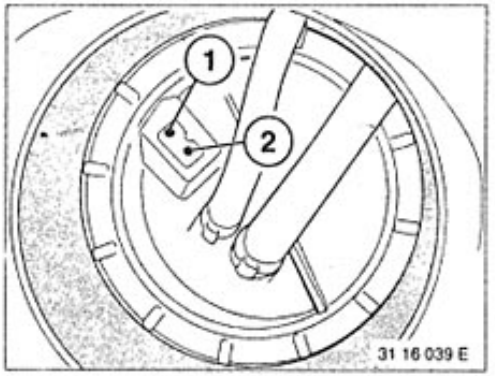

Swing-arm sender unit connection (left side of tank)

1 = Sender (black)
2 = Sender (yellow)

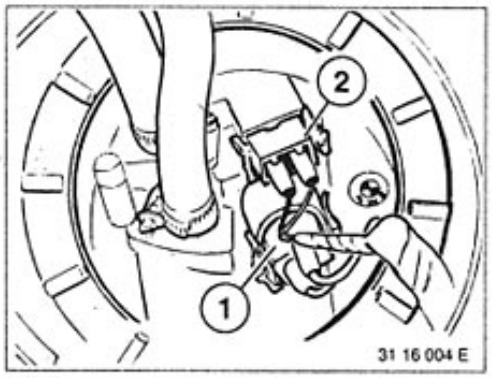

Remove connector for fuel pumps (1).
Remove connector for right swing-arm sender unit (2).

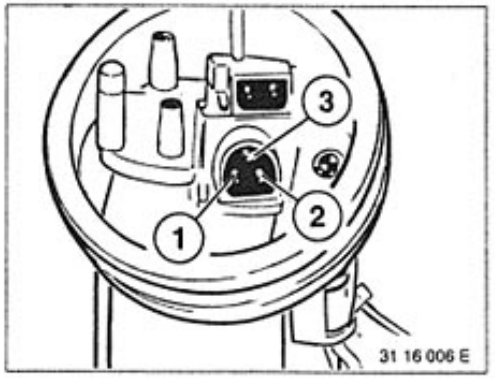

Pin allocation of fuel pump:

1 = Fuel pump 1 (gray, cylinder bank 1...6)
2 = Fuel pump 2 (purple, cylinder bank 7...12)
3 = Ground - (brown)

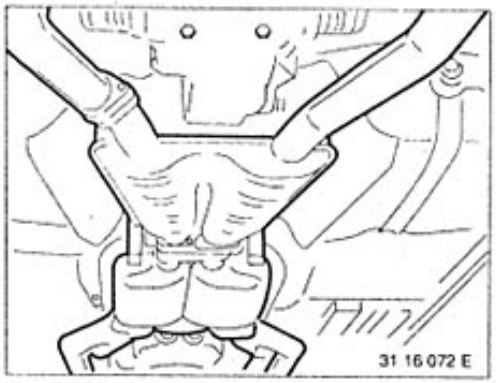

Removing and Installing Complete Exhaust System, see 18 00 020

Removing and installing or replacing left or right Bowden cable on handbrake, see 34 41 600.

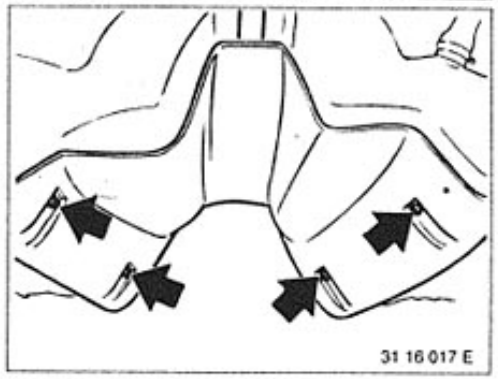

Remove and install complete propeller shaft, see 26 11 000. Unfasten nuts and remove heat shield.

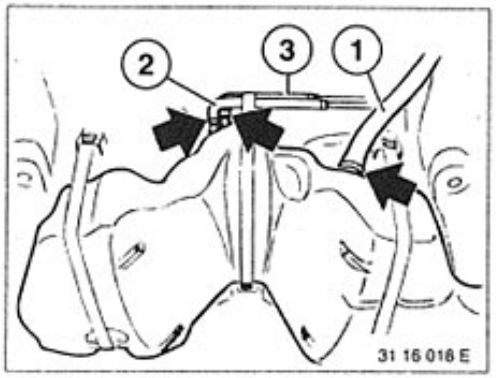

Remove filler hose (1).
Remove filler vent hose (2) and service venting hose (3).

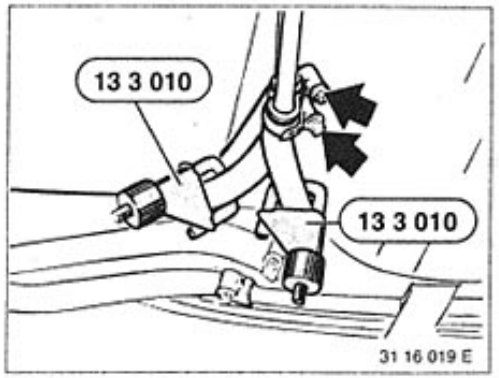

Disconnect fuel hoses with special tool 13 3 010 and remove feed lines.

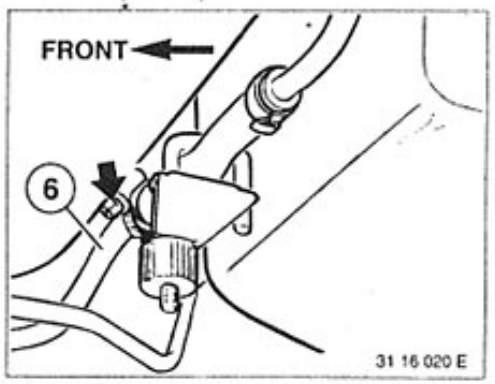

Remove suction hose from return line (6).

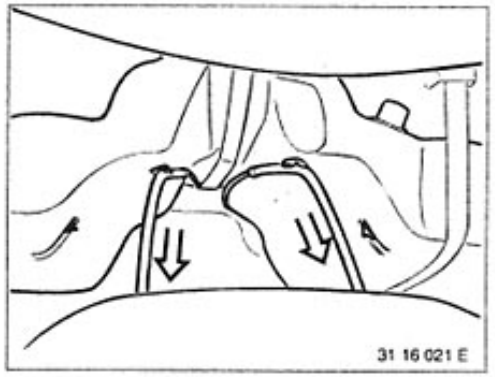

Withdraw cable guides from clamps.

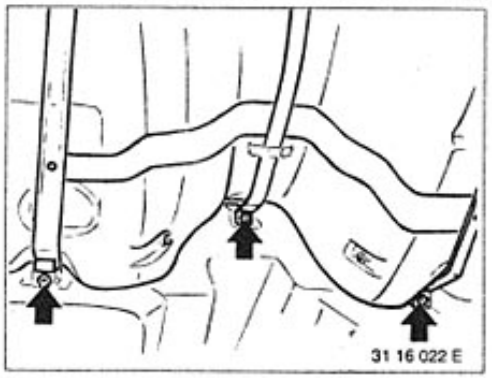

Unscrew nuts.
Disconnect retaining tapes.
Lower fuel tank.

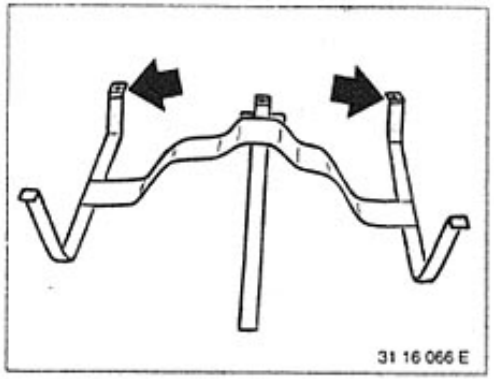

Installation:
Check hard rubber mounts and cement or replace if necessary.
Note tightening torque *.

* Refer to Technical Data

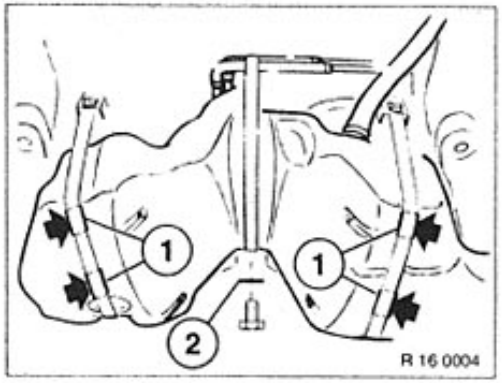

Installing fuel tank

When replacing the tightening straps or replacing the fuel tank, it may be necessary to install rubber mounts (1) on the left and right tightening straps or washers (2) in the center of the tightening strap.

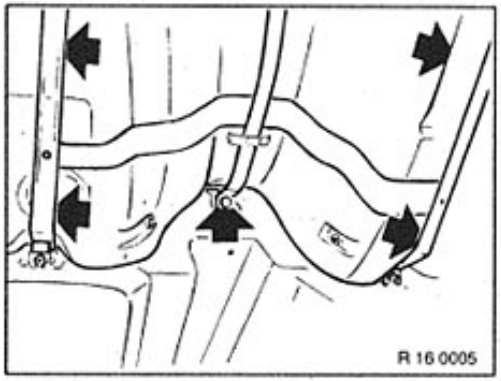

The fuel tank should be installed without any excess tension but also without any clearance (tight but not too tight).

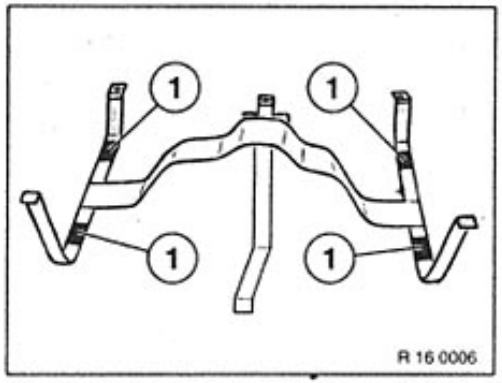

If there is a gap of more than 3 mm between the underside of the tank and the left/right tightening strap, cement damping strips to points (1).

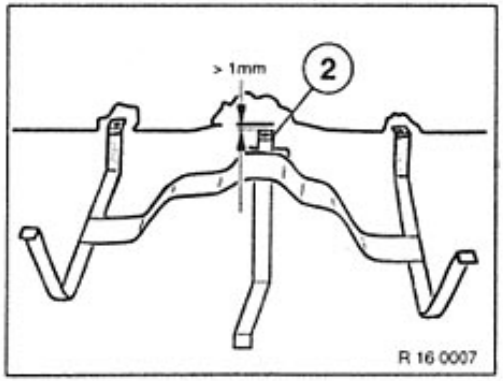

If the gap between screw face on the body and the angle on the center tightening strap is larger than 1mm, compensate this with one or two washers at point (2).

Swing-arm fuel level sender and intank pump survey

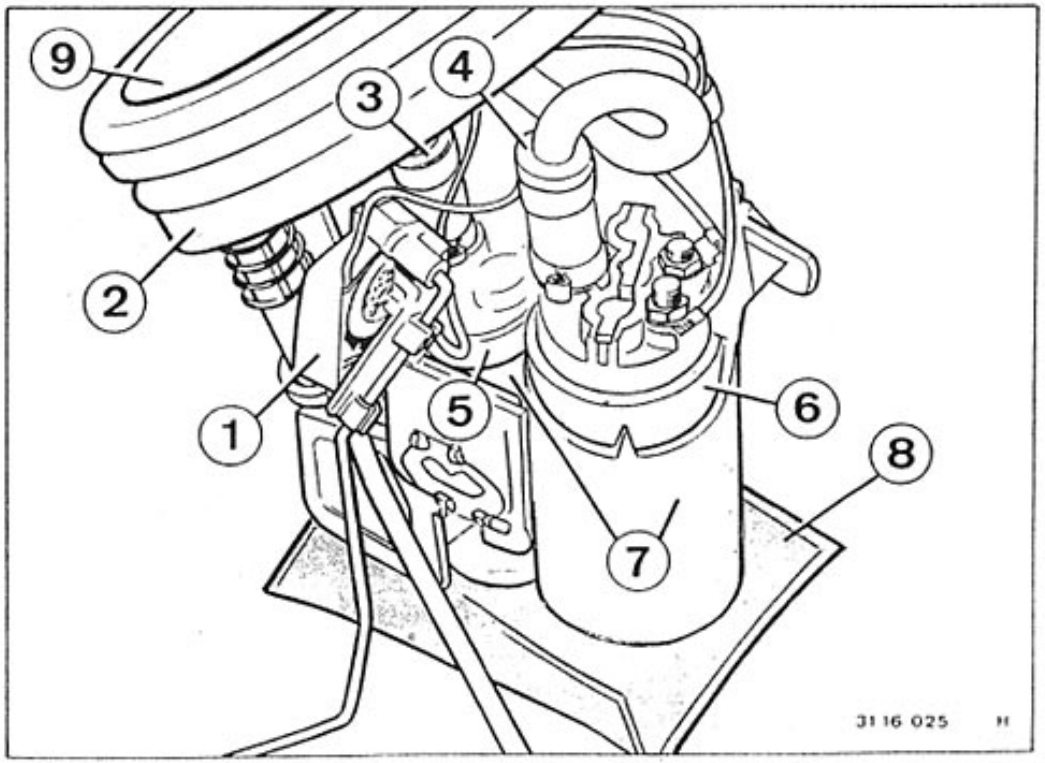

1 = Swing-arm sender
2 = Gasket
3 = Feed pipe 1
4 = Feed pipe 2
5 = Fuel pump 1
6 = Fuel pump 2
7 = Pump carrier with rubber mounts
8 = Fuel strainer
9 = Tank flange

Check fuel pressure and delivery quantity, see Group 13.

Check immersed tube indicator*, refer to pin allocation and hose connections, page 16-12/7.

Note:
Pressure dampers and non-return valves are installed in the pumps.

* Refer to Technical Data

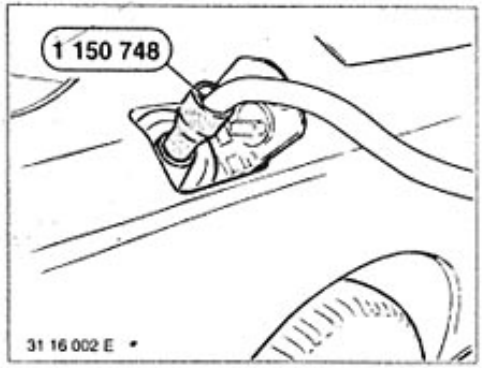

16 12 000 Removing and installing or replacing fuel level sender (right)

Draw fuel out of tank with scavenger pump** as far as possible at the filler neck.
Caution!
Conform to safety regulations as well as national legislation.
Use suitable scavenging hose* and twist slightly when inserting and withdrawing.

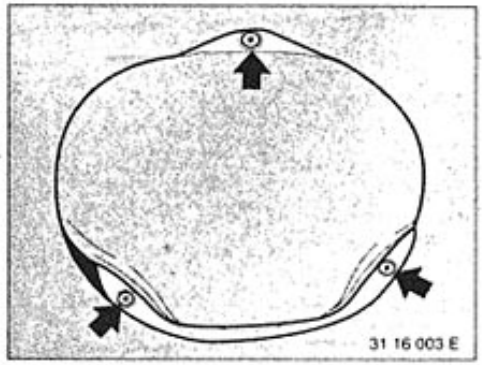

Installation:
Always use new hose clamps.
Check fuel hoses for condition and leakage, replacing if necessary.

Remove right-hand back seat.
Unfasten screws.
Remove right cover.

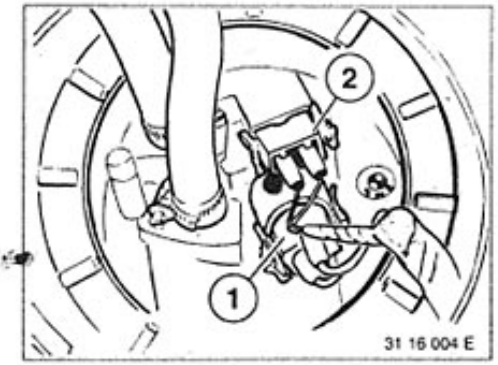

Remove connector for fuel pumps (1).
Remove connector for swing-arm fuel level sender (2).

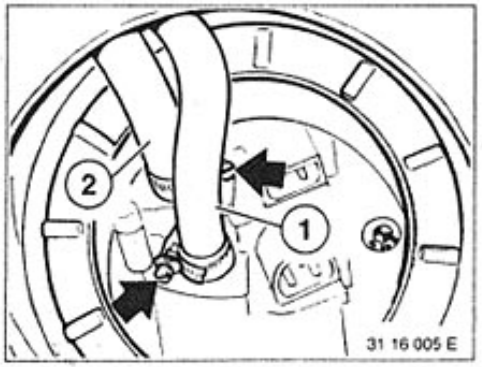

Remove fuel hoses.
Draw off fuel vapors in car*.
Note:
Place identifying marks on fuel hoses.
1 Intake pump 1 (cylinder bank 1...6)
2 Intake pump 2 (cylinder bank 7...12)

* Refer to Workshop Equipment Service Information
** Refer to BMW Parts Service

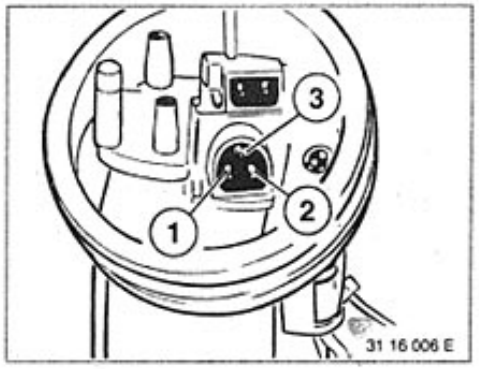

Pin allocation for fuel pump, see page 16-12/7.

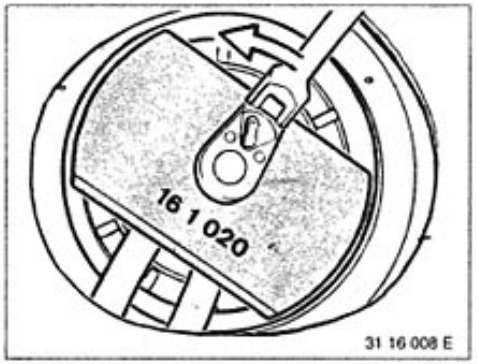

Unscrew cap nut from swing-arm sender unit on fuel pump using special tool 16 1 020.

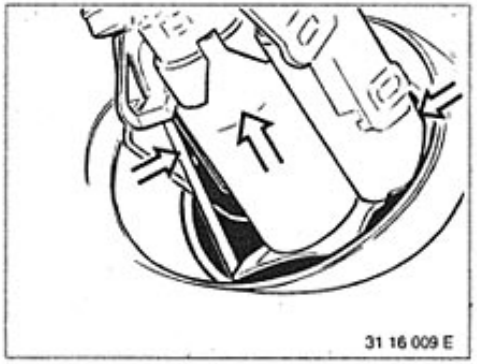

Carefully remove unit.

Installation:
Press level sensor slightly towards housing.

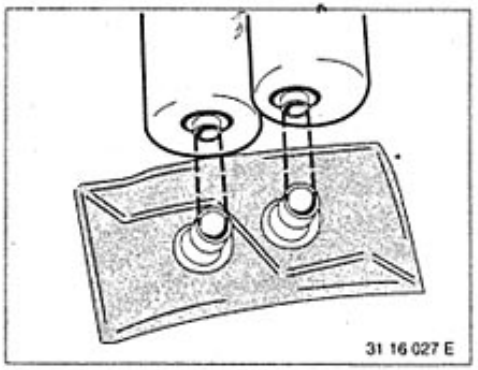

Installation:
Fit new fuel strainer.
Fit new fuel strainer and allow to engage correctly.

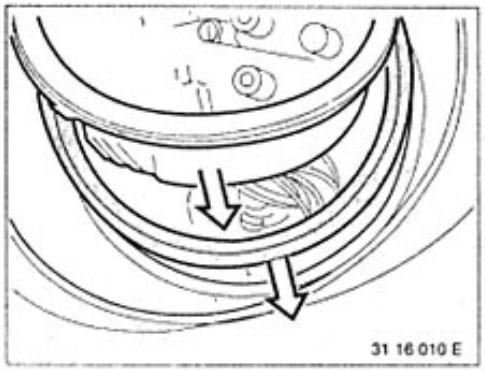

Important!
Always use a new seal and new coupling nut.

Installation:
Insert seal.
Swing strainer and float into the tank.
Press unit in vertically while slightly compressing the altitude stylus and housing.

The correct installed position is shown on page 16-12/5.

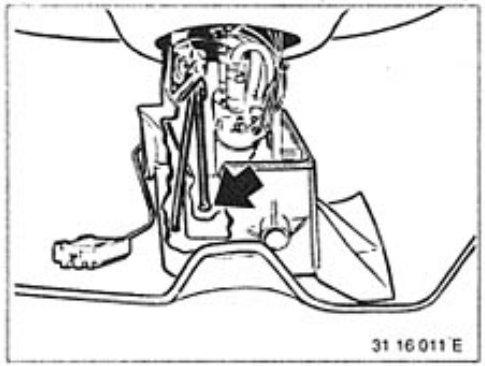

Installation:
Prior to pressing in to final position, slightly lift the unit (watch out for seal) and move back and forth slightly to guarantee that the altitude stylus is positioned vertically in the correct area and the float can be moved easily.

Installation:
Ensure that the rib on the flange is aligned with the cast tab on the tank (can be felt) in one direction before tightening the coupling nut.
Check tightening torque* of coupling nut.

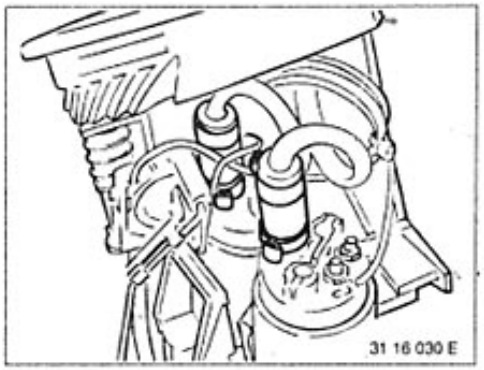

The sender for the right fuel gage makes up a single unit together with the fuel pumps and tank flange. It can only be replaced complete.

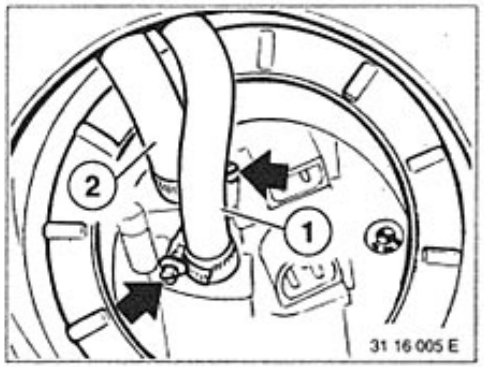

Installation:
Check fuel hoses, replacing if necessary.
Replace hose clamps.

SWING-ARM FUEL LEVEL SENDER AND EJECTOR SURVEY

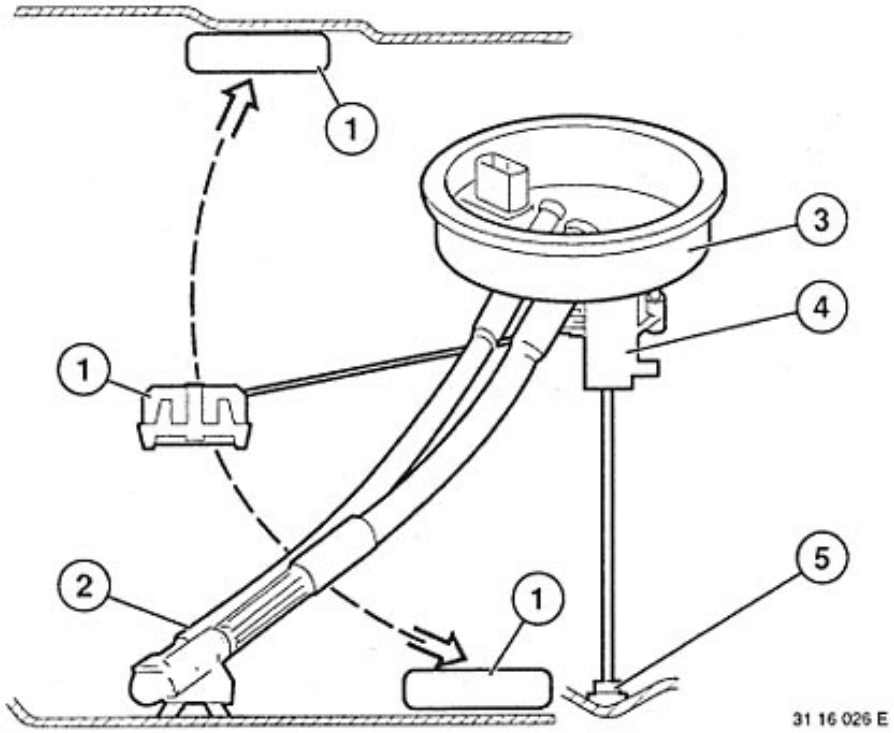

1 Float
2 Ejector
3 Tank flange
4 Swing-arm sender
5 Center and stylus (for basic setting)

16 12 001 Removing and installing or replacing fuel indicator sender (left)

Remove ground leads from mount in trunk.

Caution!
Memories of control units will be deleted.
If necessary, read them out, first.

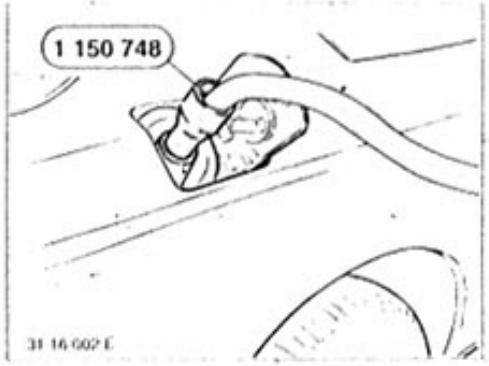

Draw off fuel with scavenge pump*, as far as possible at filler neck.

Caution!
Conform to safety regulations as well as national legislation.
Use suitable suction hose* and twist slightly when inserting and when withdrawing.

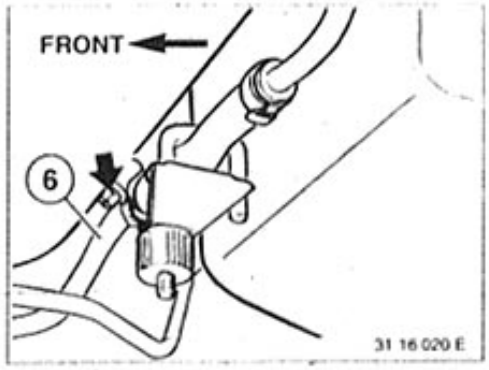

Disconnect return hose with special tool 13 3 010 and remove return line (6). Connect up fuel scavenging unit**, open clamp and drain left half of tank.

Caution!
Conform to safety regulations as well as national legislation.
Use suitable scavenging hose*.

Installation:
Always use new hose clips.
Check fuel hoses for condition and leakage and replace if necessary.

* Refer to Workshop Equipment Service Information
** Refer to BMW Parts Service

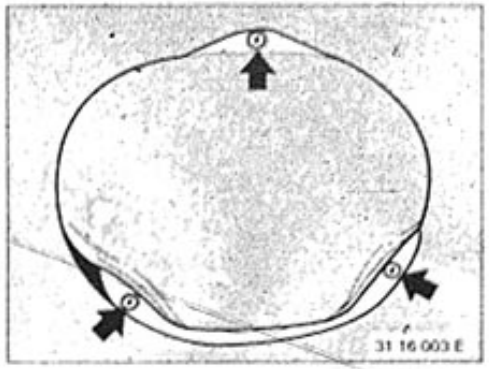

Remove left-hand back seat and left cover.
Remove connector from left swing-arm fuel level sender unit.
Remove return line fuel hoses and expansion tank.

Draw off fuel vapors in car*

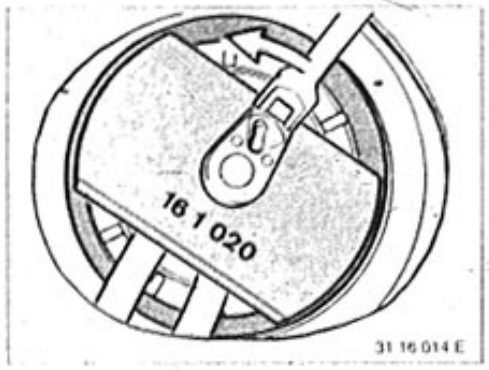

Remove cap nut from swing-arm fuel level sender unit with special tool 16 1 020.

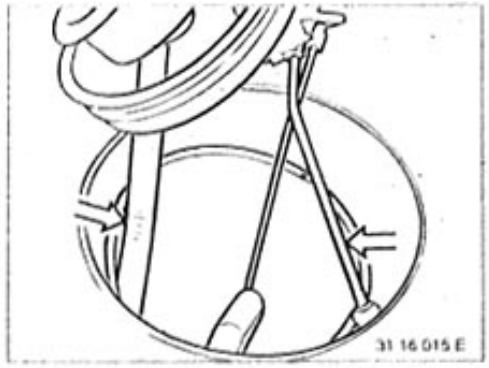

Carefully remove unit, pressing level sensor slightly towards housing while doing so.

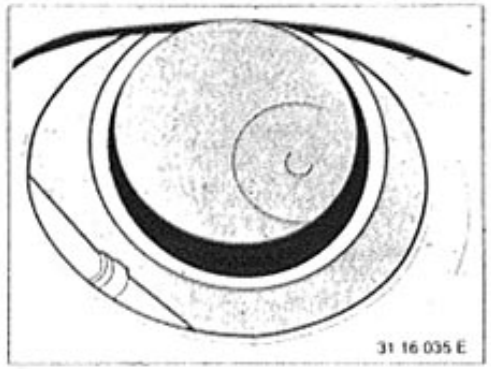

Caution!
Always use new seal and new cap nut.

* Refer to Workshop Equipment Service Information

Installation:
Install seal and press unit vertically into correct position so that probe just makes contact with the base of the tank.

Installation position - see page 16-12/7.

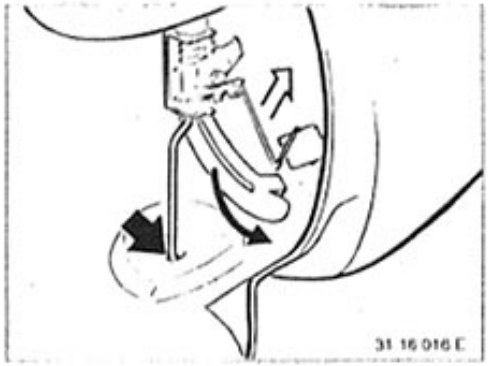

Caution!
The return and sucking jet pump line is pressed onto the base of the tank with slight preload.
The level sensor must locate in the recess provided.
The swing-arm fuel level sender unit and float must be able to move freely.

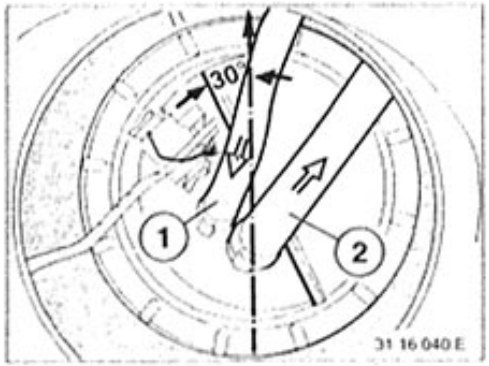

Installation:
Before tightening the cap nut, ensure that the rib on the flange points towards the cast lug on the tank (protruding), approx. 30° to direction of travel.
Note tightening torque* of the cap nuts.

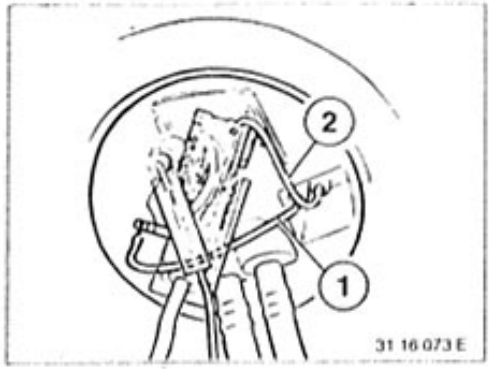

The sender for left fuel level indicator forms one unit with the sucking jet pump and the tank flange. This can only be replaced as a complete unit.

* Refer to Technical Data

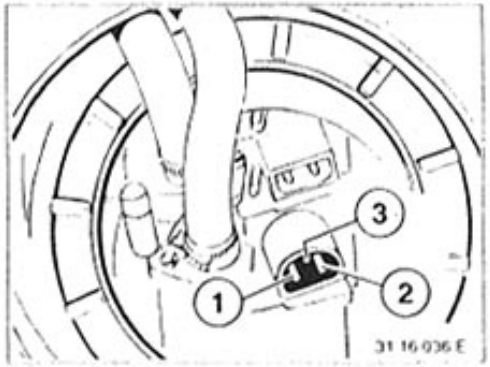

Plug and Hose Connections:

Fuel Pump Connection (Right Side of Tank)

1 = Fuel pump 1 (cyl. 1...6)
2 = Fuel pump 2 (cyl. 7...12)
3 = Ground (–) for both fuel pumps

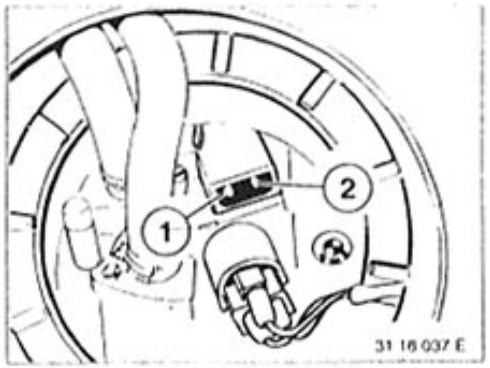

Swing-arm Sender Connection (Right Side of Tank)

1 = Sender (black)
2 = Sender (yellow)

Fuel Feed

1 = Fuel pump 1 (cyl. 1...6)
2 = Fuel pump 2 (cyl. 7...12)

Arrow = Installed position
Front = Forward direction

Installed position = front.
Cast tabs on the tank can be felt.

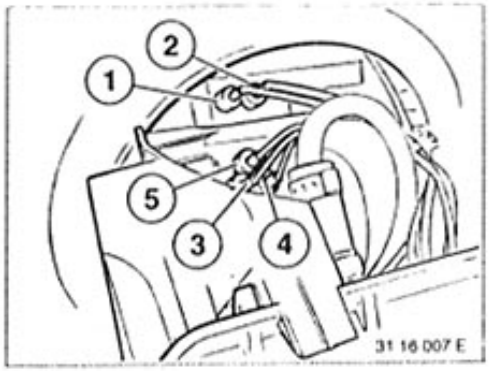

Electric Wire Connections on Inside of Tank Flange:

1 = Swing-arm sender (yellow)
2 = Swing-arm sender (black)
3 = Fuel pump 1 (gray)
4 = Fuel pump 2 (violet)
5 = Fuel pump ground (brown)

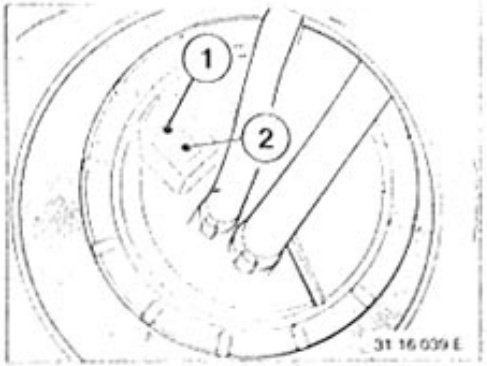

Swing-arm Sender Connection (Left Side of Tank)

1 = Sender (black)
2 = Sender (yellow)

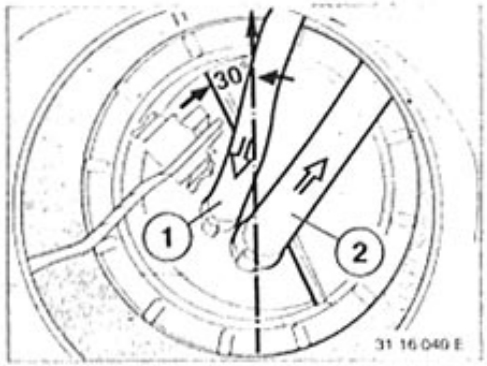

1 = Fuel return
2 = Fuel expansion tank from ejector

Installed position = approx. 30° to forward direction.
Cast tabs on the tank can be felt.

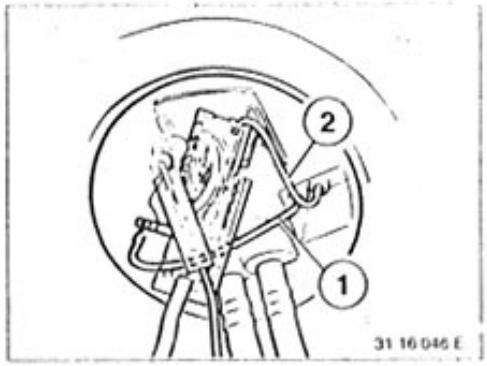

Electric Wire Connections on Inside of Tank Flange:

1 = Swing-arm sender (black)
2 = Swing-arm sender (yellow)

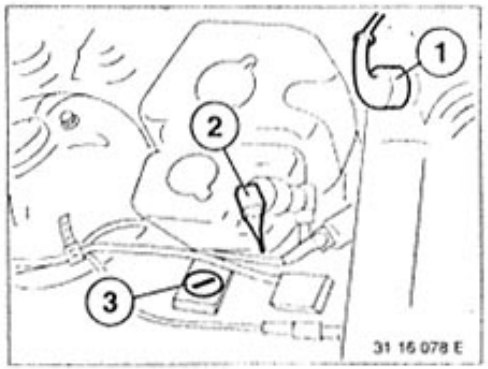

16 12 010 Removing and installing or replacing active carbon filter

Remove connectors (1) and (2). Unfasten screw (3), remove tank and place to one side.

Caution!
Catch escaping fuel in a suitable receptacle.

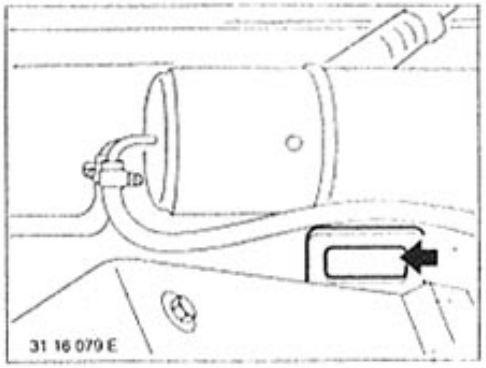

Installation:
First install tank in retaining tab.

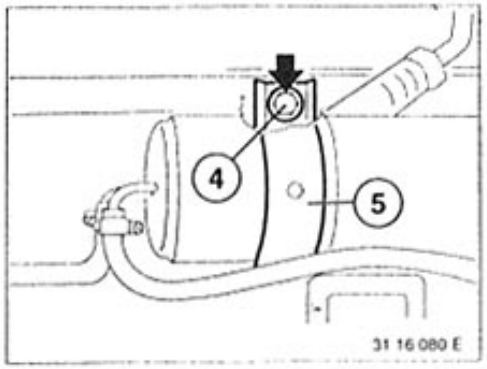

Unfasten screw (4) and disconnect bracket (5).

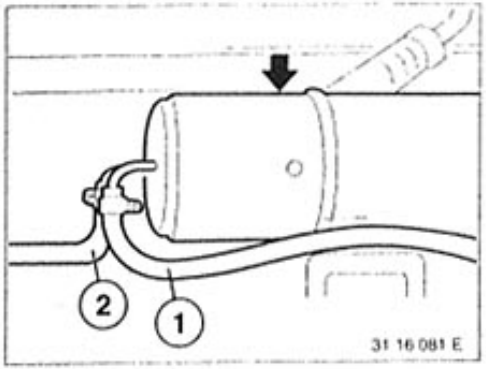

Lift up active carbon filter, remove hose (1) to the tank venting valves and hose (2) from the gravity float valve.

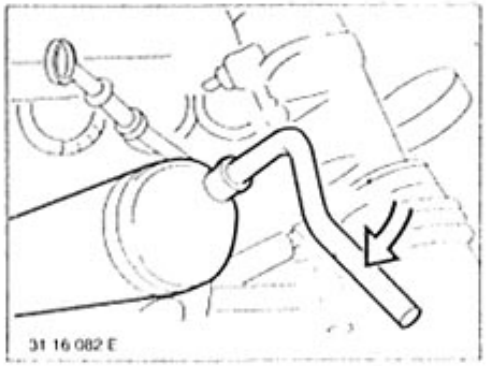

Installation:
Check that vent line is correctly located and installed.

Replace tank venting valves, see 13 90 500.

Tank venting survey

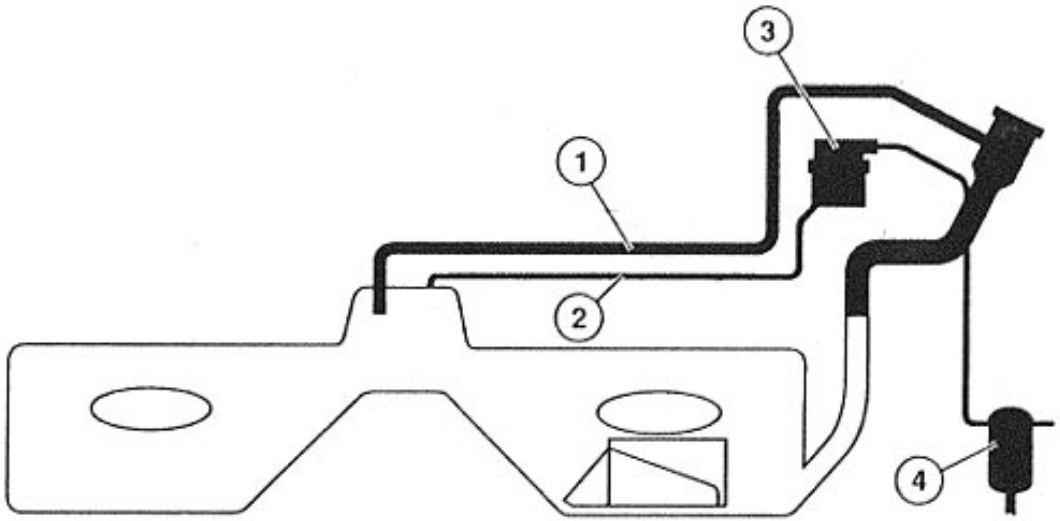

31 16 074 E

1 Tank venting line

2 Tank venting line

3 Gravity float valve

4 Active carbon filter

Replace tank venting valve, see 13 90 500

16 13 . . . REMOVING AND INSTALLING OR REPLACING FLOAT GRAVITY VALVE

Checking:
The float gravity valve is faulty in case of excessively high pressure in the fuel system or leakage, fuel flows from the float gravity valve to the carbon canister (carbon canister is filled with fuel).

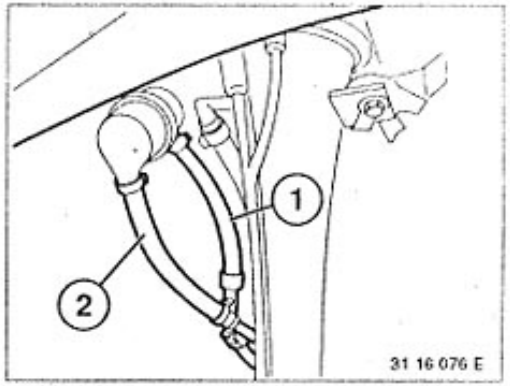

Disconnect hose (1) to the carbon canister and hose (2) to the tank.

Caution!
Pipes could be filled with fuel which is under pressure.
Catch escaping fuel in a suitable container.

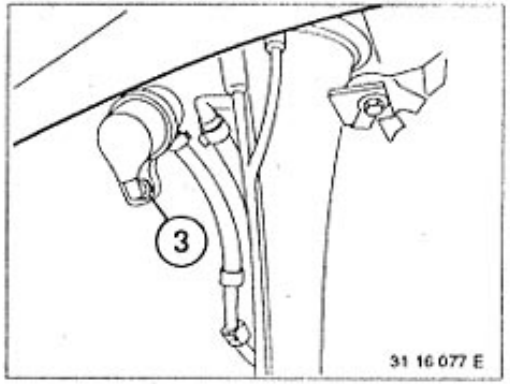

Unscrew nut (3).
Remove valve.

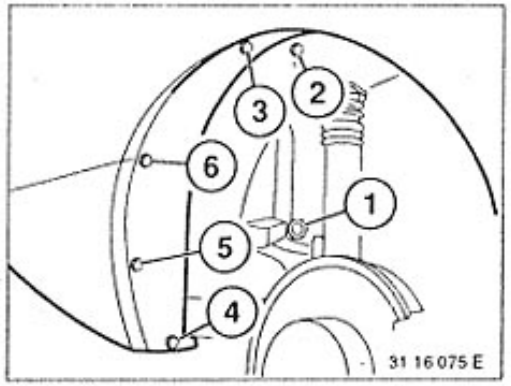

Removing and Installing:
Unscrew nuts (1 ... 6) and remove trim panel from the right rear wheel house.

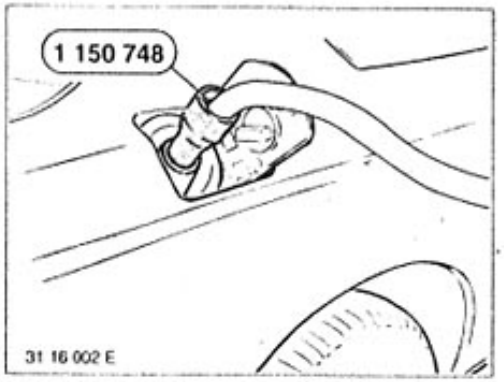

16 14 010 Removing and installing or replacing fuel pump(s)

Draw fuel out of tank with scavenge pump** as far as possible at filler neck.
Caution!
Conform to safety regulations as well as national legislation.
Use suitable scavenge hose* and twist slightly when inserting and when withdrawing.

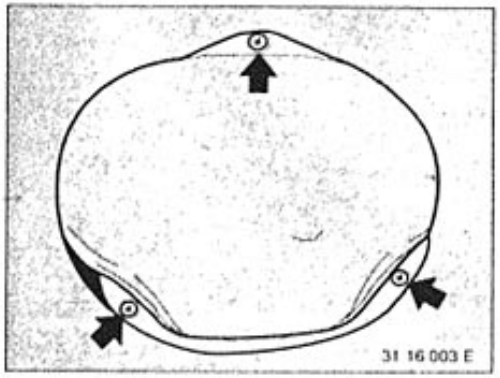

Installation:
Always use new hose clamps.
Check fuel hoses for condition and leakage, replacing if necessary.
Also refer to Service Information, Group 16.

Remove right-hand back seat.
Unfasten screws.
Remove right cover.

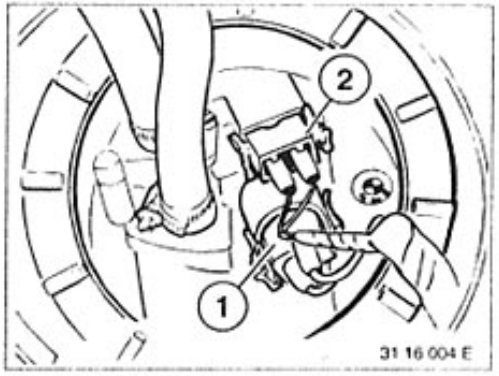

Remove connector for fuel pumps (1).
Remove connector for swing-arm fuel level sender (2).

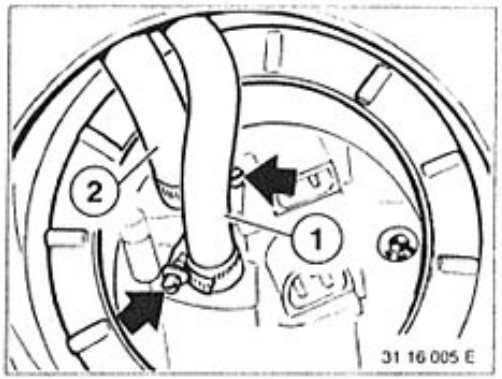

Remove fuel hoses.
Draw off fuel vapors in car*
Note:
Mark fuel hoses.
1 = Intake pump 1 (cylinder bank 1...6)
2 = Intake pump 2 (cylinder bank 7...12)

* Refer to Workshop Equipment Service Information
** Source of Suppply: BMW Parts Service

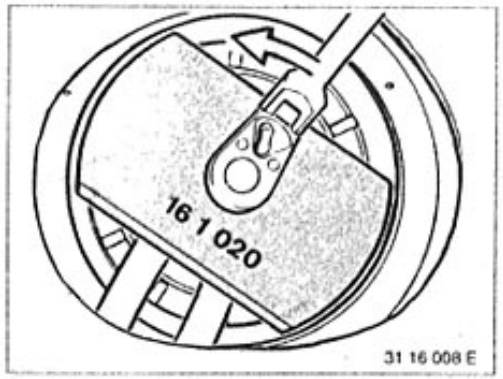

Unscrew cap nut from fuel level sender unit on fuel pump using special tool 16 1 020.

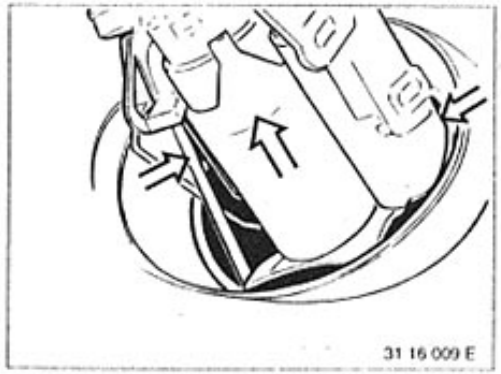

Carefully remove unit.

Installation:
Press level sensor slightly into housing.

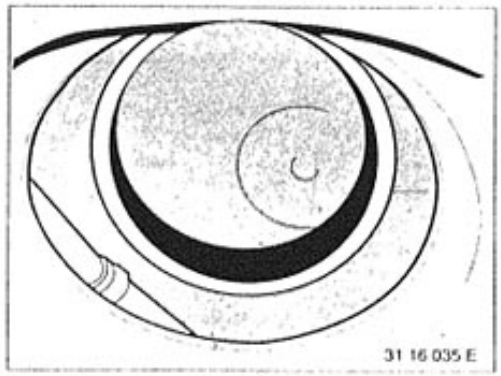

Caution!
Always use new seal and new cap nut.

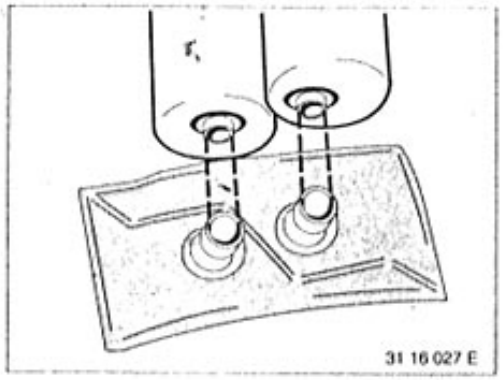

Installation:
Always use new fuel strainer.
Fit fuel strainer and allow to engage correctly.

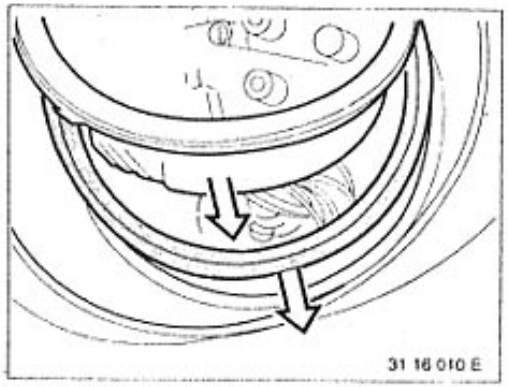

Installation:
Install seal, then swivel strainer and float into tank. Slide in unit upright, compressing level sensor and housing slightly as you do so.

Installation position, refer to page 16-12/7.

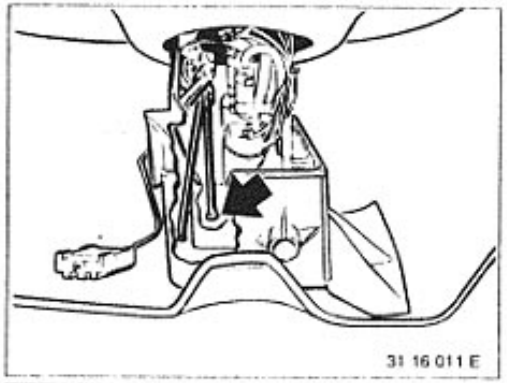

Installation:
Before pressing finally home, raise unit slightly (taking care of seal) and move gently to and fro to ensure that the level sensor is upright in the correct area and that the float is able to move freely.

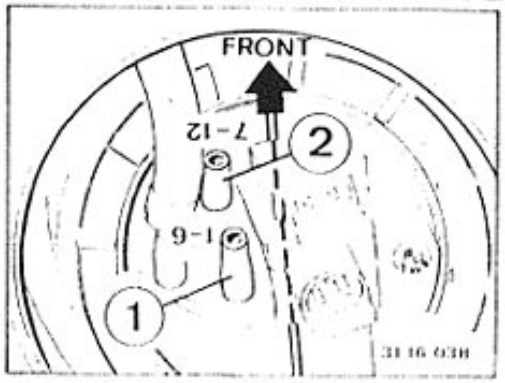

Installation:
Before tightening the cap nut, ensure that the rib on the flange and the cast lug (protruding) on the tank point in the same direction.
Note tightening torque* of cap nuts.

The sensor for the right fuel indicator forms one unit with the fuel pumps and the tank flange. This must be replaced as a complete unit.

* Refer to Technical Data

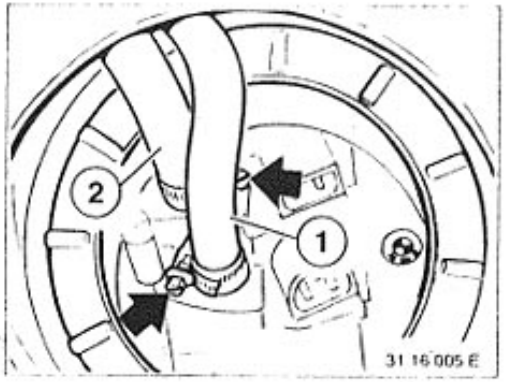

Installation:
Check fuel hoses and replace if necessary.
Fit new hose clamps.

17 Radiator

COOLANT CIRCUIT OF TWELVE CYLINDER M 70 ENGINE

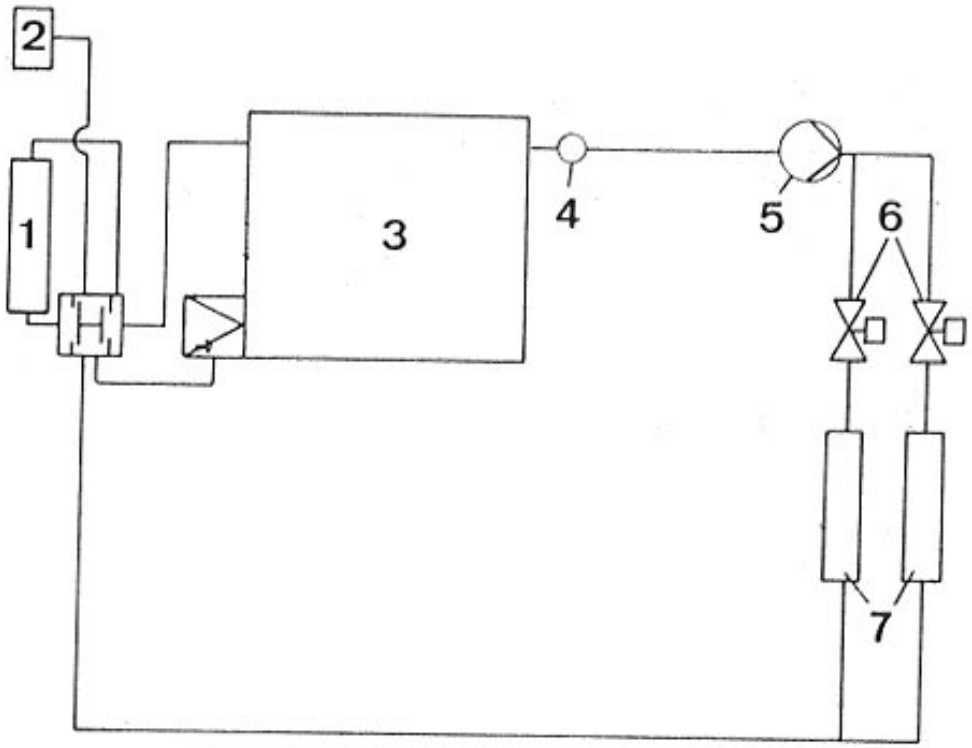

1 Radiator

2 Expansion tank

3 Engine block/cyl. head circuit

4 Temperature sensor

5 Additional water pump

6 Heater valves

7 Heat exchanger

311/002 H

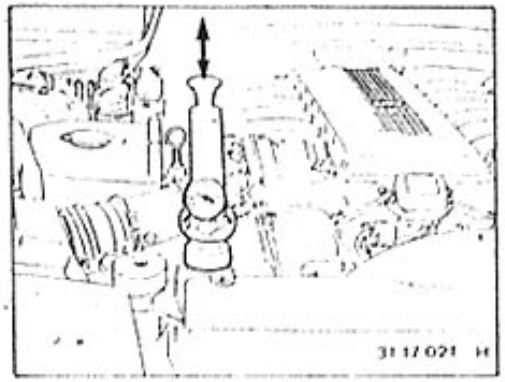

17 00 009 Checking cooling system for leaks

Caution: only unscrew expansion tank when engine is cold.

Attach tester 17 0 002 and adapter 17 0 005 to expansion tank and generate a pressure of 1 bar.
The cooling system does not leak if there is no significant drop in pressure (max. 0.1 bar) after about 2 minutes.

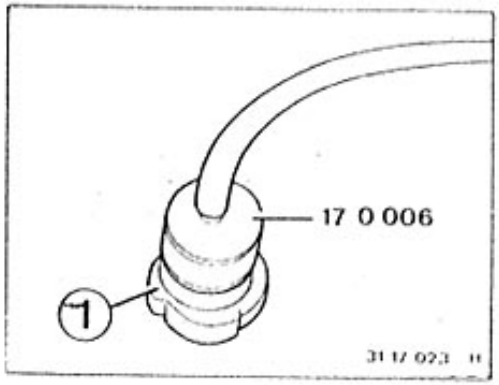

B: Check vacuum valve.

Screw cap (1) on tester 17 0 006 and connect vacuum hose to BMW Service Tester or to tool 61 6 030. Slowly build up a vacuum at the cap Vacuum valve opens at about 0.9 bar (0.1 bar vacuum).

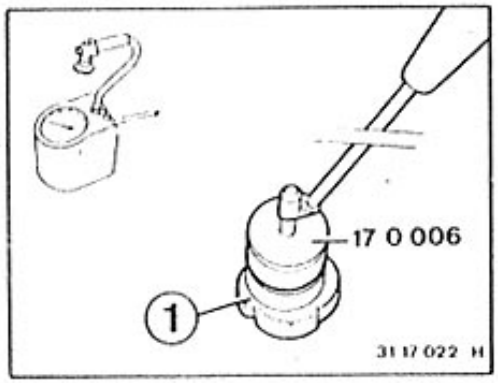

Check screw connection.

A: Check pressure valve.

Screw connection (1) to tester 17 0 006 and build up air pressure slowly.
Pressure relief valve should open at about 2 bar.

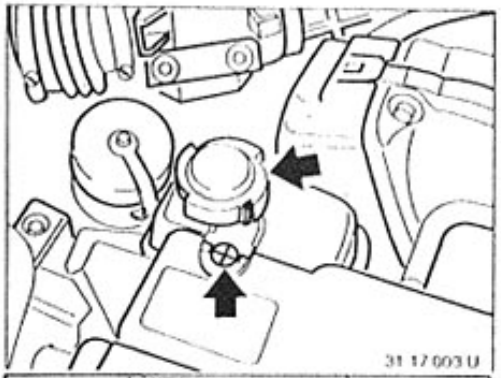

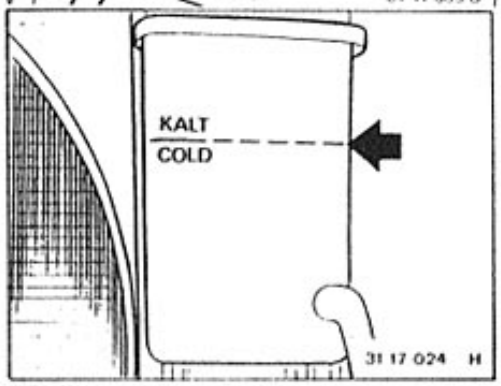

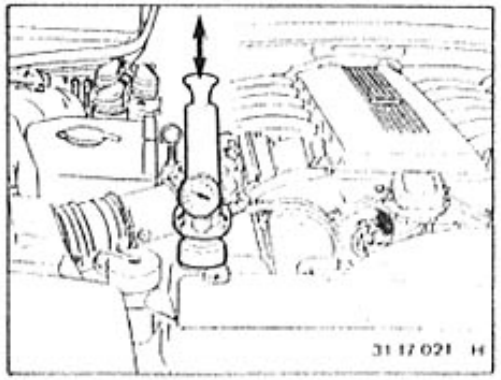

17 00 039 Bleeding cooling system and checking for leaks

When completely refilling (engine cold): set heating valve to "WARM", open venting screw 2-3 turns and completely fill expansion tank (approx. 11...12 l).
Only use approved grade of coolant**.

Run engine for a brief period (fluid level in expansion tank falls).
Top up expansion tank as far as filler neck; total fill quantity*.
Close expansion tank. Close venting screw.

After engine has run up to temperature then been allowed to cool down (to approx. 20°C), the coolant level should reach the mark "KALT/COLD".

Check cooling system for leaks 17 00 009.

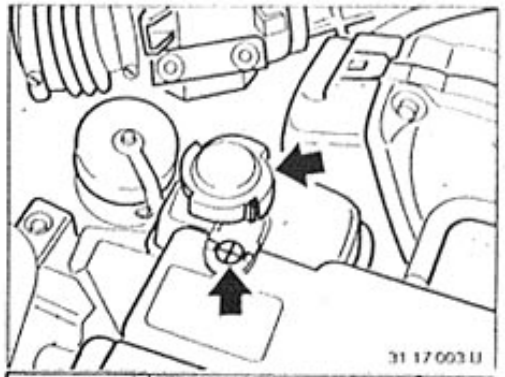

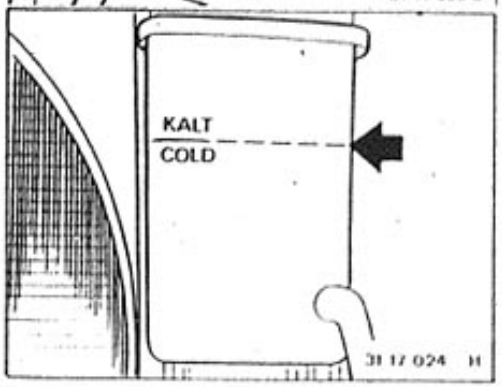

Correct coolant level:

Set heating valve to "WARM".
Caution!
Only open expansion tank cap once engine has cooled down.
Open venting screw 2...3 turns and wait until coolant emerges without air bubbles.
Run engine for a brief period.
Top up level in expansion tank during this process.
Replace cap on expansion tank.
Close venting screw.

Once the engine has come up to temperature, check the coolant level.

The coolant level mark on the expansion tank indicates the coolant level at approx. 20°C.
Only use approved grade of coolant**.

Caution!
Never top up cooling system while engine is hot.

* Refer to Technical Data
** Refer to Operating Fluids Specifications

* Refer to Operating Fluids Specifications

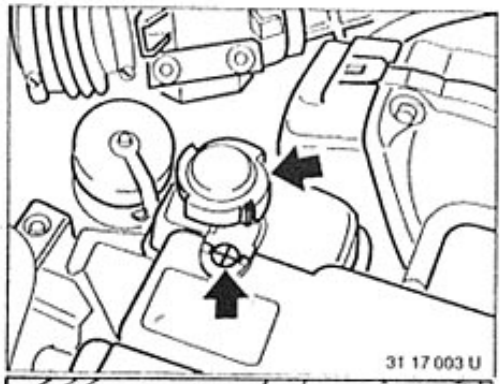

17 11 000 REMOVING AND INSTALLING RADIATOR

Caution!
Unscrew expansion tank cap only after engine has cooled off.
Loosen bleeder screw.

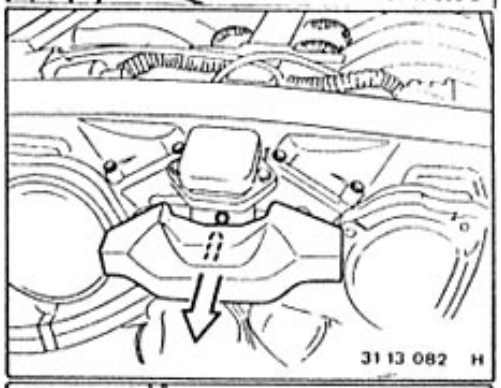

Pull off oil catch tray.

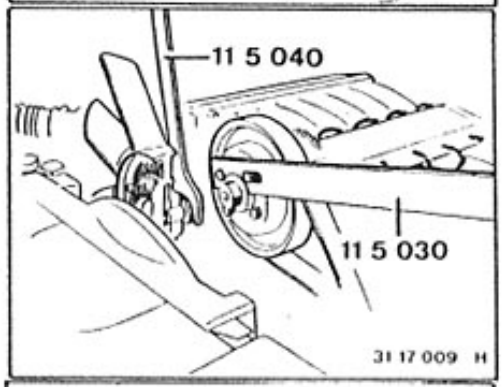

Remove fan.

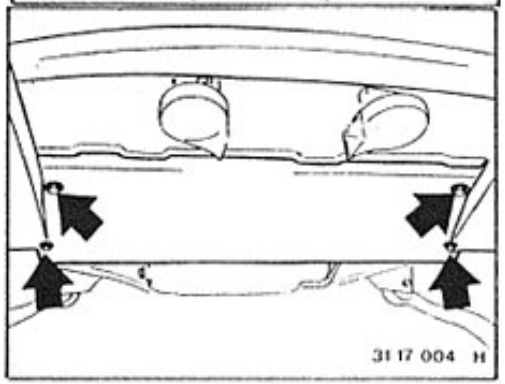

Unscrew engine splash guard.

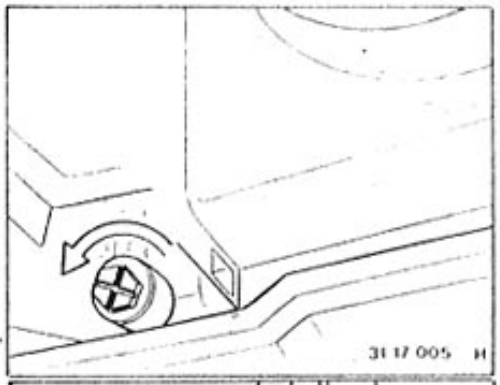

Unscrew drain plug and drain, catch and dispose coolant.

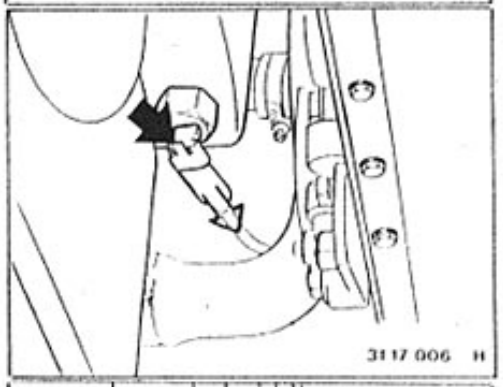

Pull off plug on level sender.

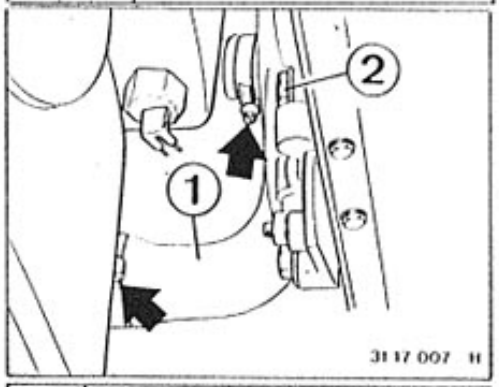

Disconnect bottom coolant hose (1) and expansion hose (2).
Catch and dispose coolant.

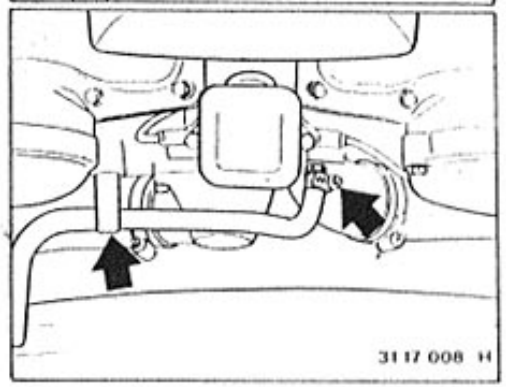

Disconnect bleeding hose.

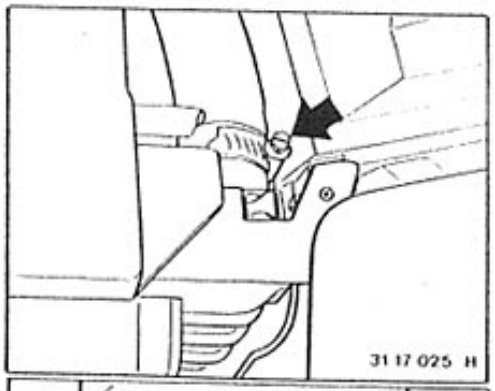

Remove upper water hose.

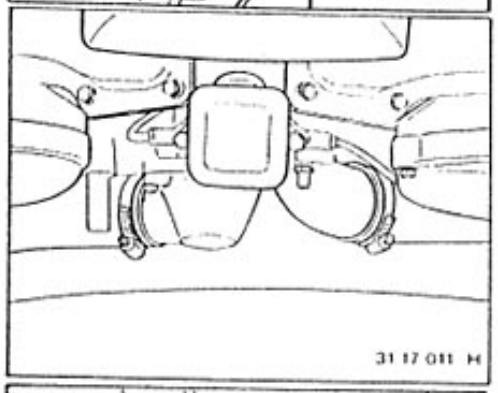

Remove water hoses from engine.

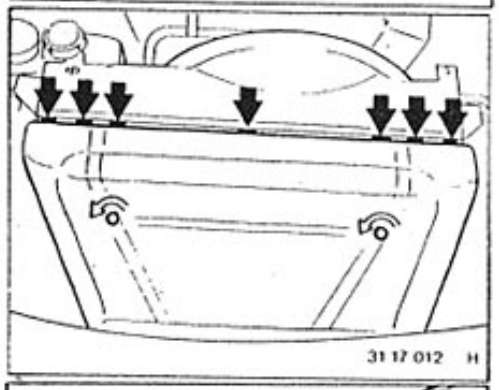

Unfasten upper section of air duct and unclip with screwdriver at specified points (arrows).

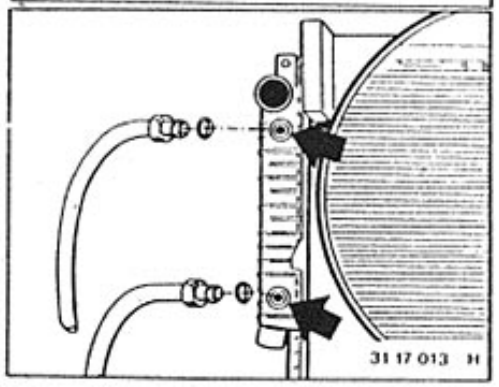

Version with integrated transmission oil cooler:

Remove transmission oil cooler lines.
Catch escaping transmission fluid and dispose of it correctly.

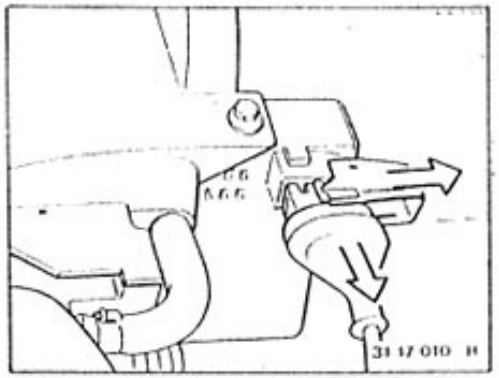

Open clips and remove connector from temperature switch.
If necessary, raise the headlight pods.

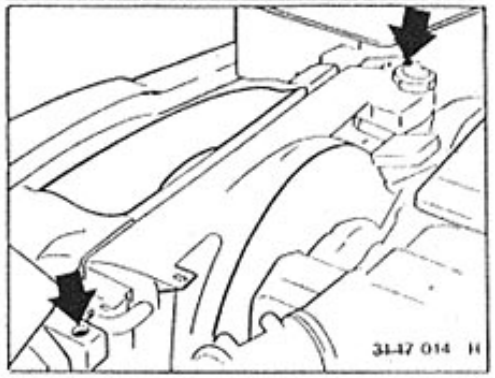

Unfasten left and right cooler brackets.
For removal, raise headlight pods.

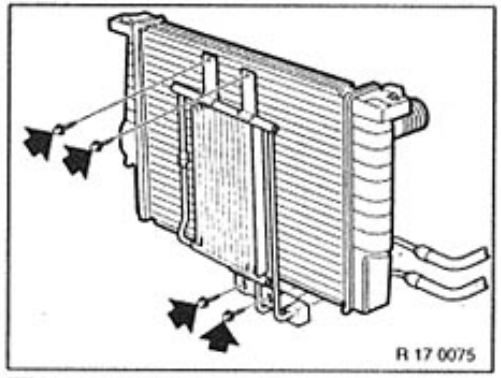

Version with separate transmission oil cooler:

Lift radiator and press backwards.
Unfasten screws at top and bottom.

Note:
Transmission oil cooler remains in vehicle.

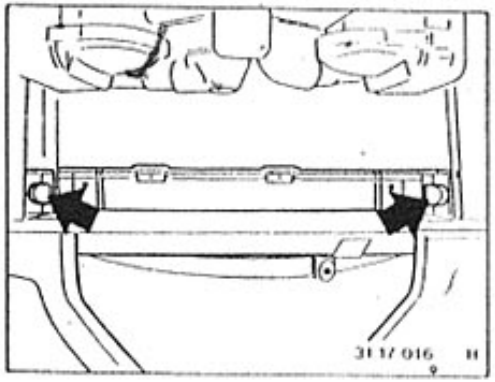

Lift out radiator.

Installation:
Ensure that mounting blocks are correctly located.
Place radiator on supports.

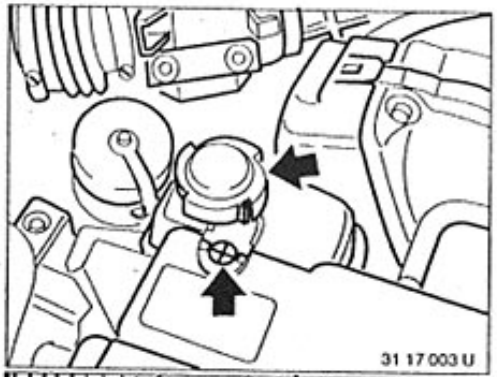

17 11 100 Removing and installing coolant expansion tank

Caution!
Only unscrew sealing cap once engine has cooled down.

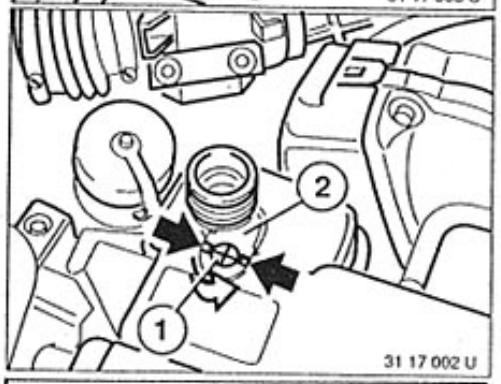

Completely unscrew venting screw (1), unfasten retainer (2) and remove.

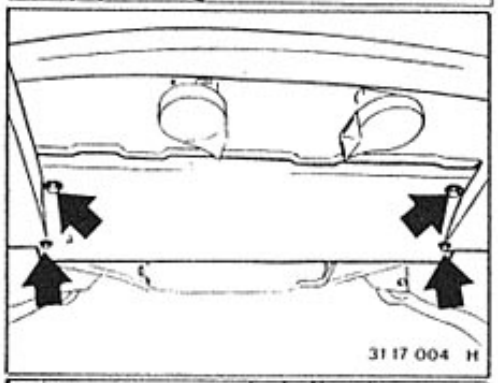

Remove underbody protection from engine.

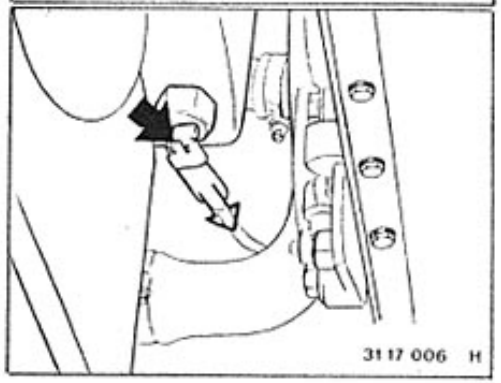

Remove connector from level sensor.

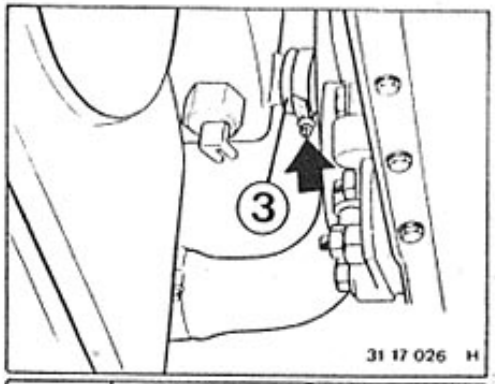

Remove expansion hose (3).
Drain off coolant, catch and dispose of correctly.

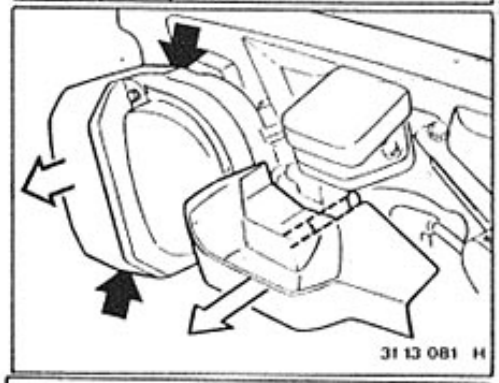

Remove distributor cable sheath.

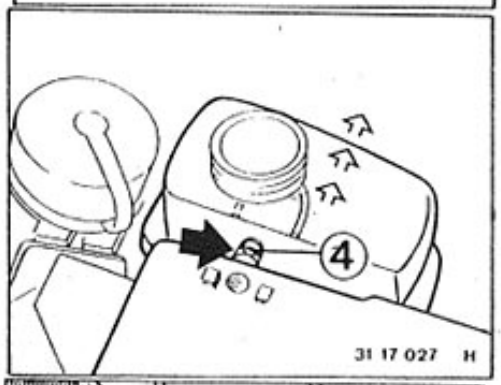

Pull expansion tank backwards and remove venting hose (4).

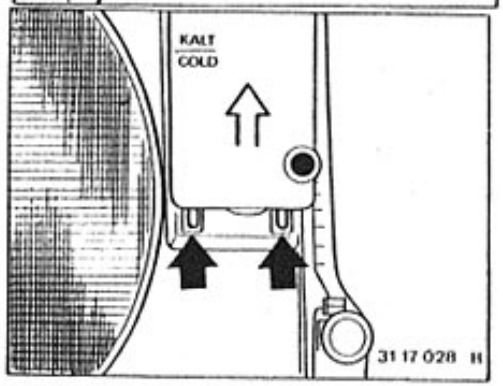

Lift expansion tank up to remove.

Installation:
Expansion tank lugs must locate on radiator.

Top up with specified coolant, bleed cooling system and check for leakage 17 00 039.

17 11 509 Flushing radiator

If oil has entered the coolant circuit, the radiator and expansion tank must be flushed and cleaned with Solvethane** cleaning agent.

Follow the procedure described below:

1. Removing and installing the radiator, see 17 11 000.
   Removing and installing or replacing coolant expansion tank, see 17 11 100.

2. Fill with approx. 2 liters of Solvethane.

3. Shake radiator and tank well, then empty once the oil has separated.

4. Reinstall the cleaned radiator and expansion tank and connect to the cooling circuit.

5. Fill the entire cooling circuit with hot water and flush, if necessary several times, to be sure of clearing the system of any cleaning residue.

6. Check drained coolant for oil residue and, if necessary, repeat process 5.
   After the cleaning operation, fill the cooling system*.
   Bleed the cooling system and check for leakage, see 17 00 039.

Comment:
Solvethane attacks rubber seals, hoses etc. and must therefore not be allowed to enter the cooling circuit, or to remain there. For this reason, always follow the safety regulations governing the use of Solvethane (printed on the containers).

* Refer to Operating Fluids Specifications folder
** Source of Supply: BMW Parts Service

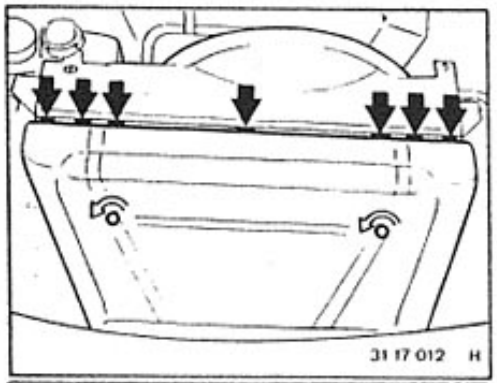

17 40 000 Removing and installing or replacing complete additional fan

Unfasten upper section of air guide duct and unclip radiator with screwdriver

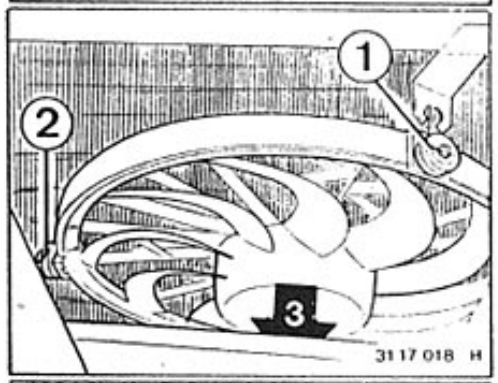

Unscrew fan console bolts (1...3).

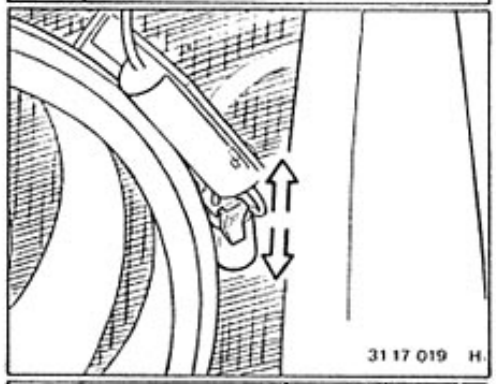

Disconnect plug

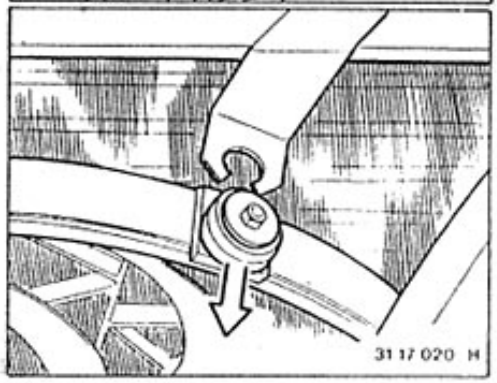

Pull fan console with fan out of retainers and lift out.

18 Exhaust system

For additional work, refer to “Repair Instructions for 7 Series E38”

18 00 020 Removing and installing exhaust assembly (M70).

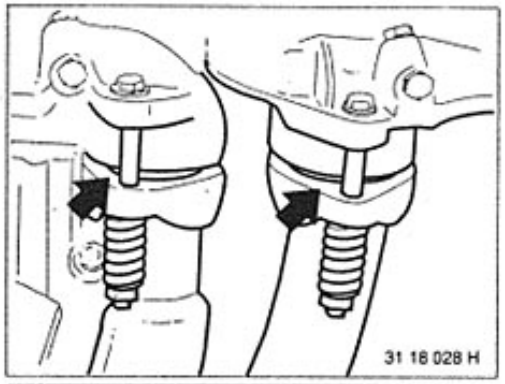

Note:
If work is carried out on the exhaust assembly or vehicle which affect the location of the exhaust pipes on the exhaust manifolds, the connection must be loosened and, after the work is complete, tightened back to specified torque.
Tightening torque 18 00 1AZ*

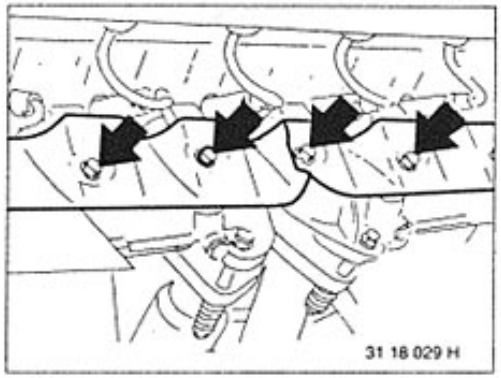

Aligning exhaust pipes on engine.

Remove underbody protection for engine.
Partially dismantle windshield wash container
Remove heat baffle plate from exhaust manifold.

Caution!
Do not distort the heat baffle plates.
Tightening torques*.

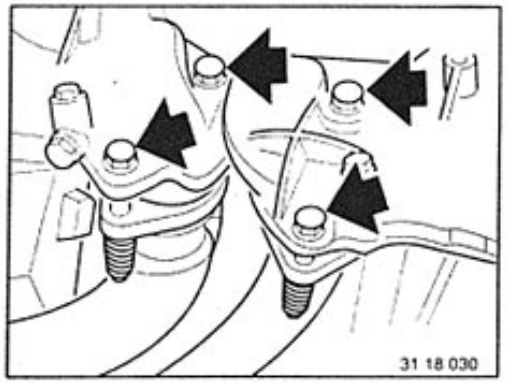

Unfasten connection of exhaust pipes on manifold.

Caution!
Do not tighten down exhaust pipes on manifold until complete exhaust assembly has been installed.

* Refer to Technical Data

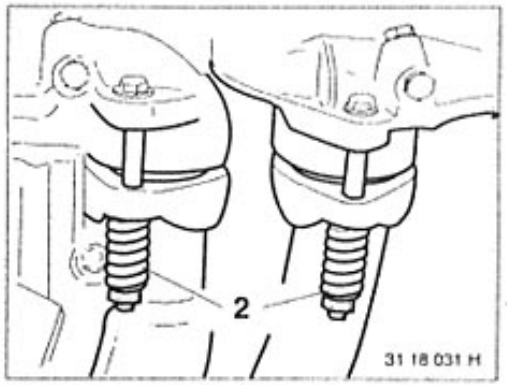

Installation:
Flanges must be aligned parallel to one another.
Springs (2) must not be preloaded in block.
Tightening torque specification 18 00 1AZ*

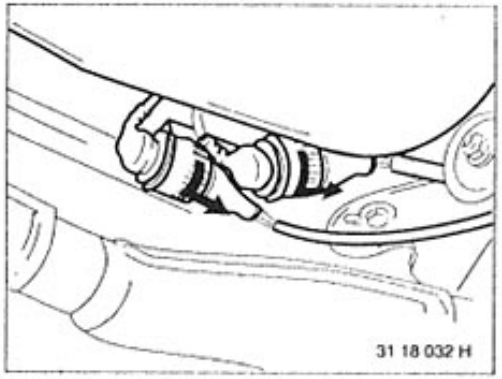

Disconnect plug for Lambda oxygen sensors.

Caution!
Identify (mark) Lambda oxygen sensors before removal: do not confuse them.

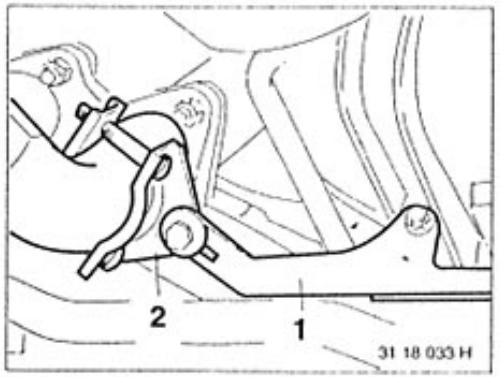

Unscrew bracket (1) from transmission.
Only loosen and displace gripper clamps (2).

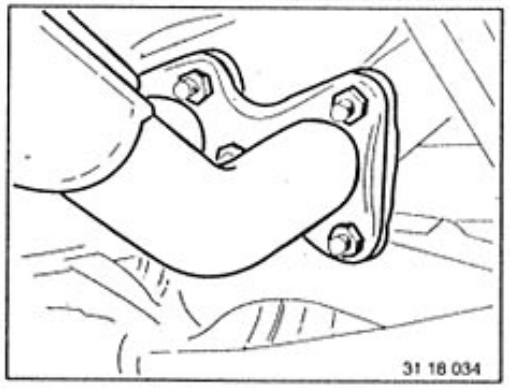

Unfasten flange connection between exhaust pipes and exhaust assembly.

Installation:
Check gaskets, replacing if necessary.
Replace self-locking nuts.

* Refer to Technical Data

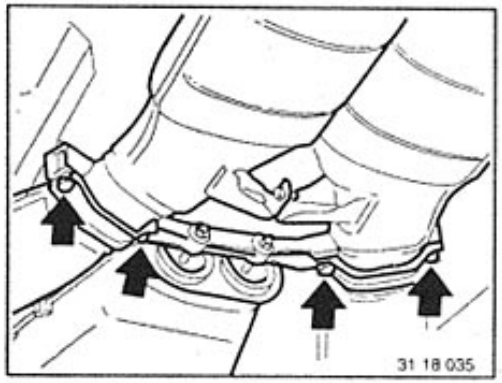

Support exhaust assembly on a lifting fixture. (weight approx. 55 Kg.)
Unscrew transmission suspension from catalytic converter.

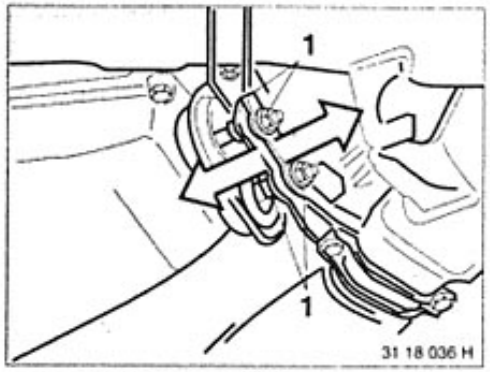

Installation:
Adjust the nuts (1) to secure the exhaust assembly without stresses.

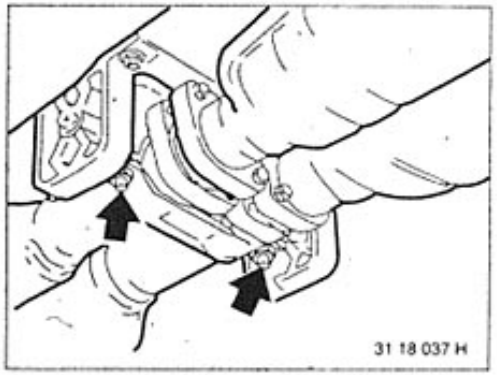

Unscrew rear suspension point for catalytic converter.

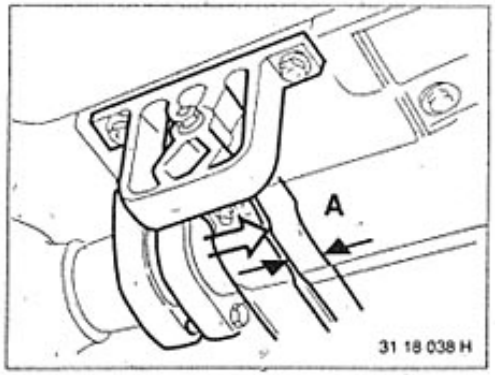

Installation:
Preload rubber mount in direction of travel A = 10 mm.

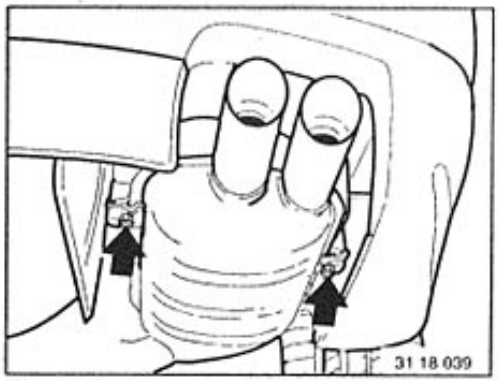

Unscrew all rear suspension points.
Remove exhaust assembly downwards.

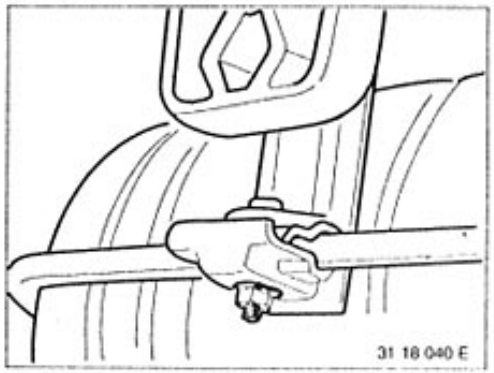

Installation:
Arrangement of clamping brackets.

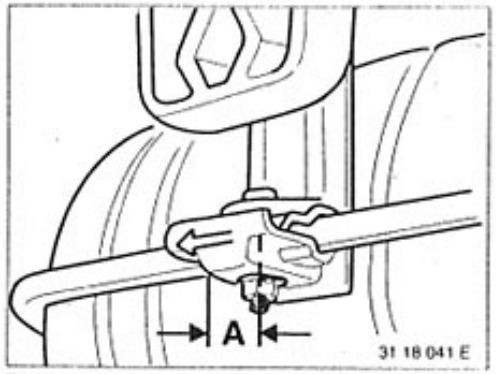

Installation:
Preload rubber mount in direction of travel A = 15 mm.

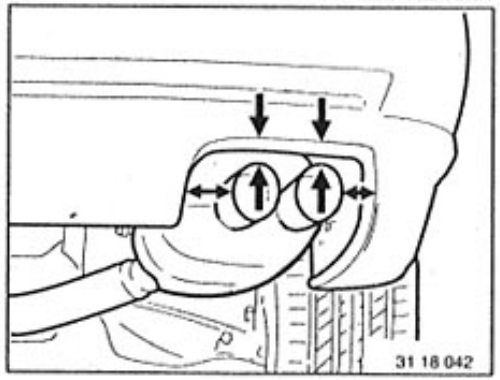

Installation:
Check location of tailpipes to body openings. If necessary, loosen flange connections and align exhaust assembly.

18 00 020 Removing and installing exhaust assembly (M60).

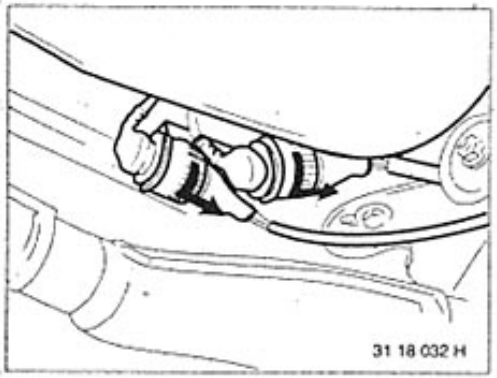

Disconnect plug for Lambda oxygen sensors.

Caution!
Identify (mark) Lambda oxygen sensors before removal: do not confuse them.

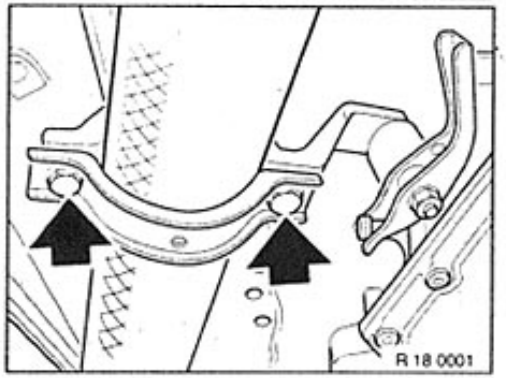

Unfasten clamps on both transmission brackets.

Support exhaust assembly with a lifting fixture. (Weight approx. 55 Kg.)

Unscrew flange connections between catalytic converter and left and right exhaust manifolds

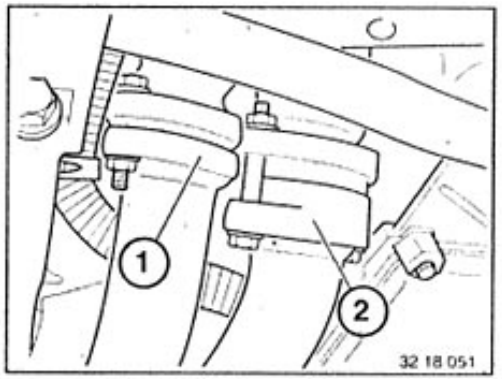

Note tightening sequence:

1. Outer exhaust manifolds on right and left (1), flange with ball
2. Inner exhaust manifolds on right and left (2), flange with gasket.

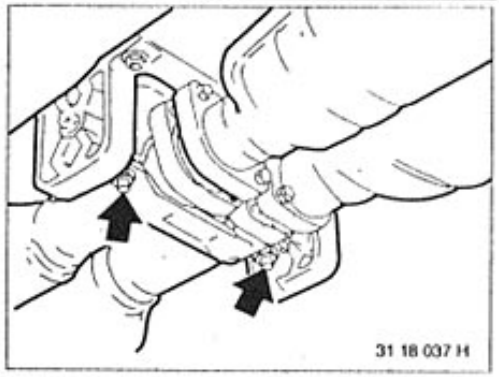

Unscrew suspension on the rear catalytic converters.
Subsequent procedure,
refer to 18 00 020 (M70).

Installation:
Check gaskets and replace if necessary.
Fit new self-locking nuts.
Coat threads with copper paste**.

** Refer to BMW Parts Service

18 00 020 Removing and installing complete exhaust system (M73)

Disconnect plug connections from left and right Lambda oxygen sensors.
Unclip cable

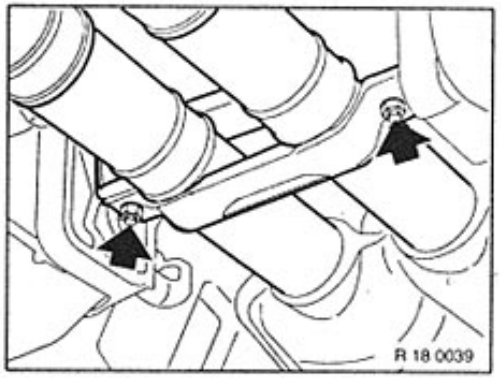

Unscrew and remove mount from the catalytic converters.

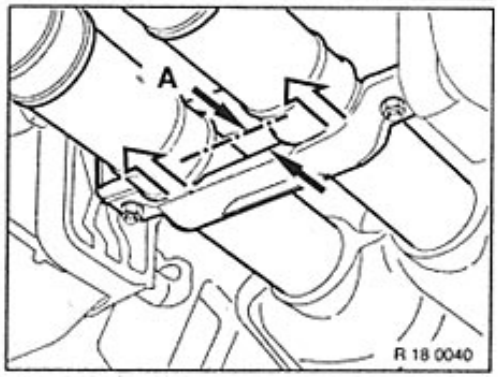

Installation:
Preload rubber mount in direction of travel A = 10 mm.

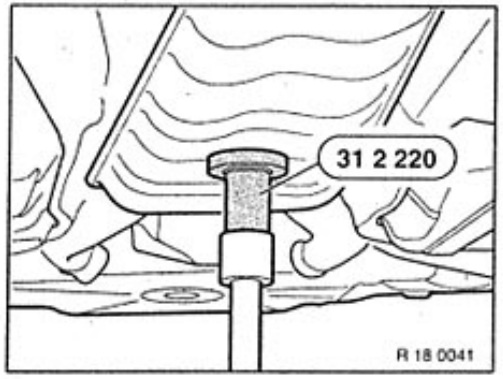

Support exhaust system with special tool 31 2 220.
(weight approx. 53 kg)

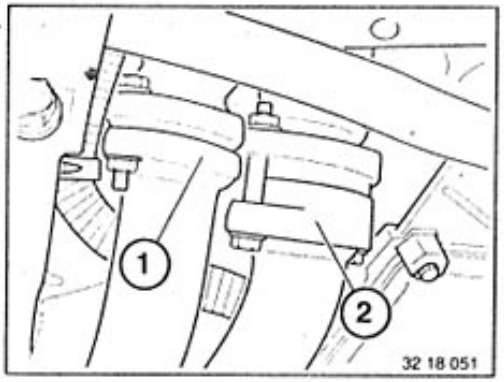

Unscrew and remove left and right catalytic converters from the exhaust manifolds.

Installation:
Replace self-locking nuts.
Coat threads with copper paste*.

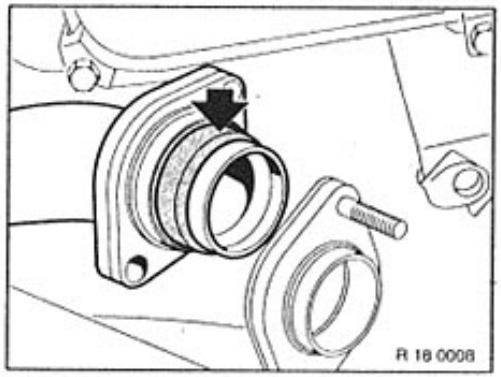

Installation:
This joint only has a seal on the inside pipes.

Check seal and replace if necessary.

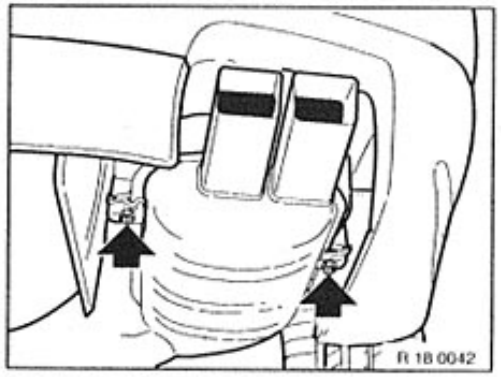

Unscrew and remove both clamping brackets from left and right rear mufflers.

Remove complete exhaust system.

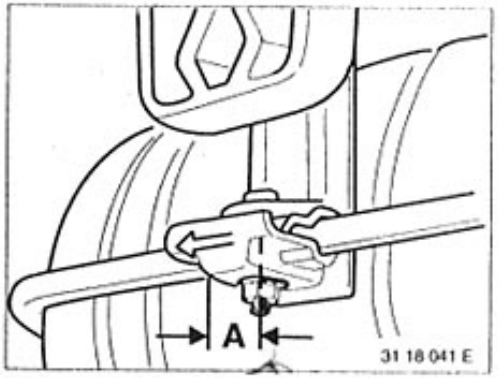

Installation:
Preload rubber mount in direction of travel A = 15 mm.

* Source of Supply: BMW Parts Service

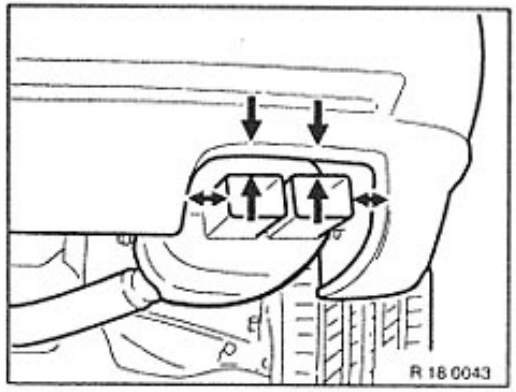

Installation:
Note position of tailpipes in the body apertures.

18 10 031 Replacing rear muffler
(connection with clamping sleeves)

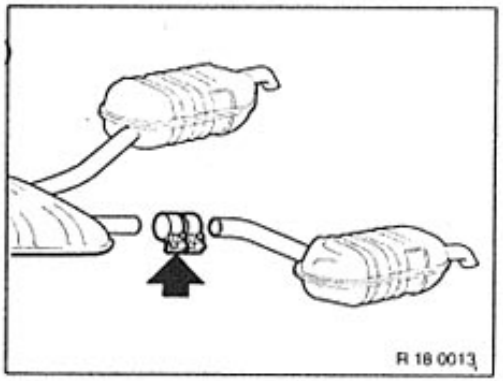

Install new rear muffler and secure with clamping sleeve.

Ensure that separating point lies in centre of clamping sleeve.

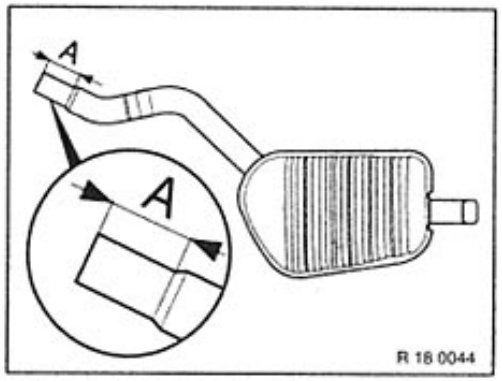

Measure length (A) of pipe section on new rear muffler.

Caution!
Apertures on new rear muffler are sealed with adhesive film.
Remove adhesive film, including from contact faces of claming sleeve.

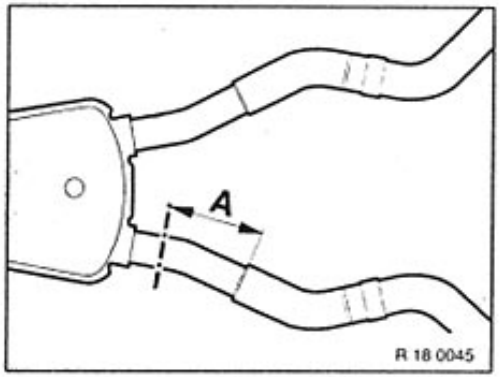

Transfer defined dimension (A) to the installed rear muffler.

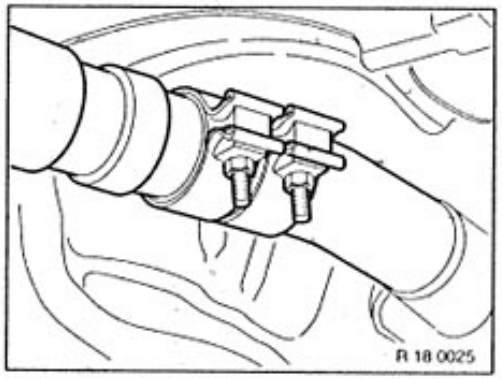

Align exhaust system and clamping sleeve in such a way that sufficient space is left from adjacent components

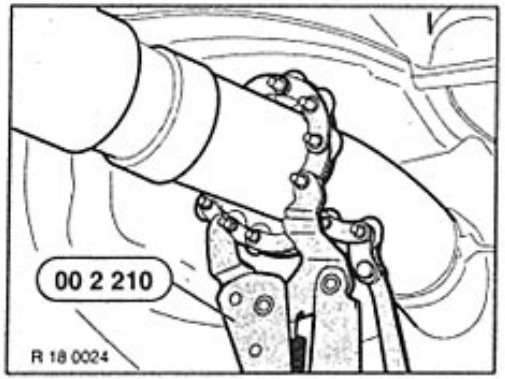

Disconnect exhaust pipe with special tool 00 2 210 and deburr.

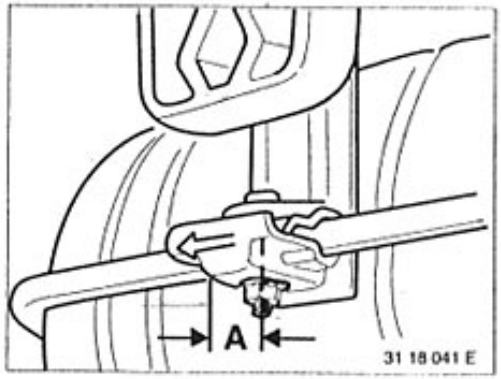

Note:
Preload both rubber mounts on rear muffler in direction of travel A = 15 mm.

18 12 ... Dismantling exhaust assembly (M70).

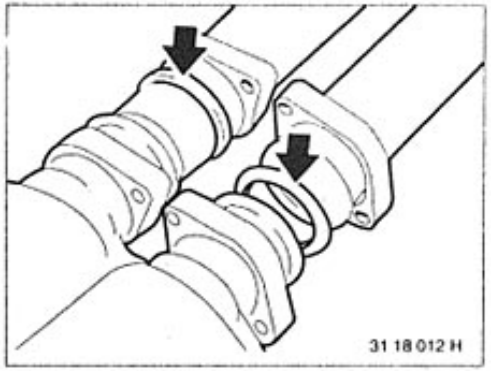

Disconnect silencer assembly.

Installation:
Check seals and replace if necessary.

Disconnect catalytic converter from rear silencer unit.

Note:
To avoid distortion of the exhaust assembly once installed in the vehicle, do not tighten connections until assembly is complete - loosen again where applicable.

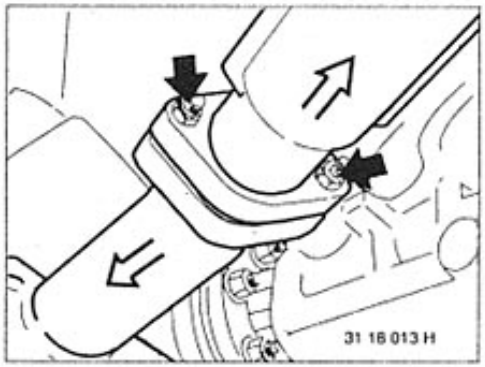

Remove back left rear muffler.

Unscrew flange.
Remove silencer unit.

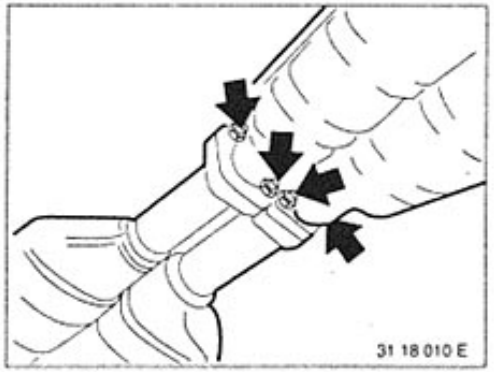

Unscrew left and right side of flange.

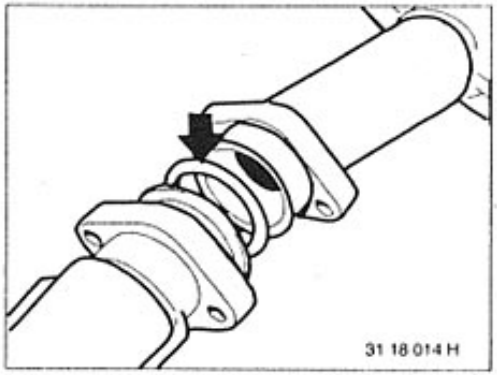

Installation:
Check seal and replace if necessary.

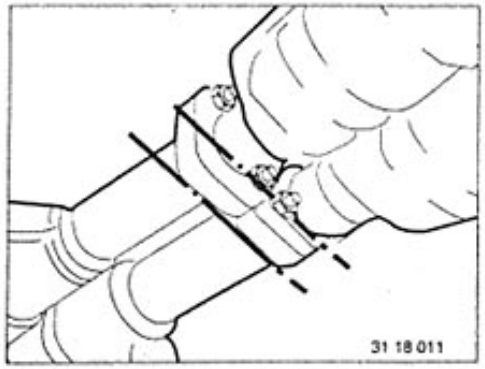

Installation:
Note location of flanges. Tighten screws evenly.
The gap between the flanges must be aligned parallel with one another.

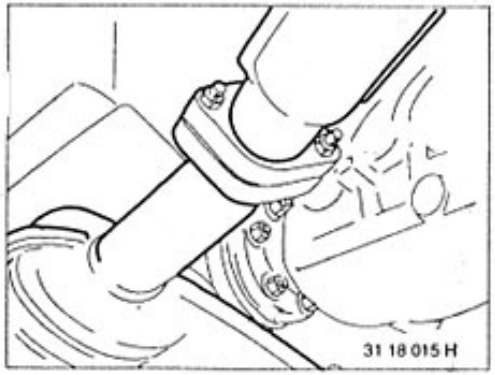

Installation:
Note position of flanges. Tighten screws evenly.
The gap between the flanges must be parallel all round.

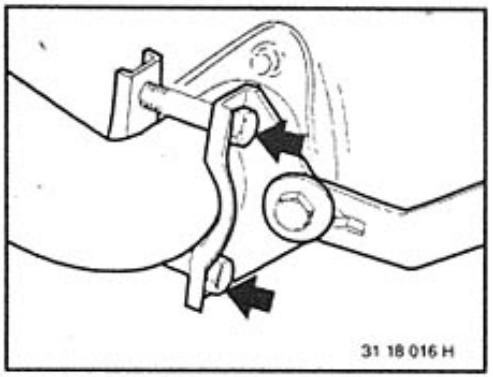

Remove left and right catalytic converters.

Unscrew bracket.

Installation:
Do not tighten bracket until installation of unit is complete.

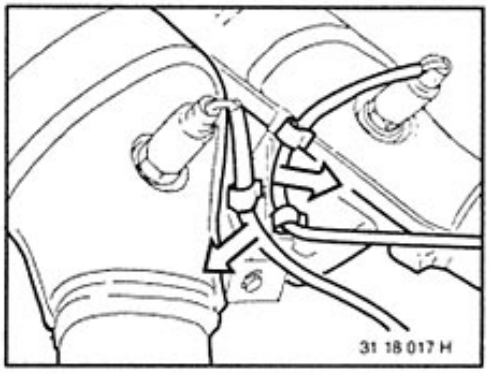

Disconnect Lambda oxygen sensor cable from bracket.

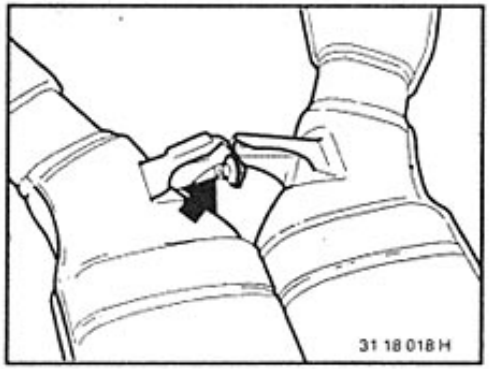

Unscrew connection.

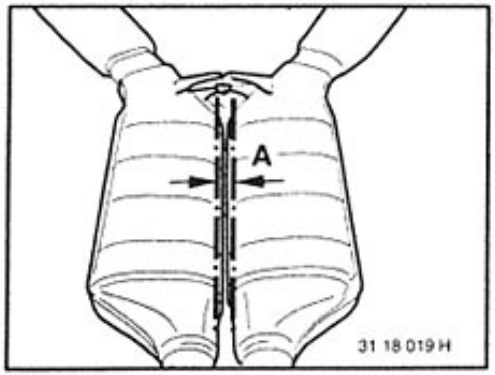

Installation:
There must be a gap of at least A = 6 mm between the two catalytic converters.

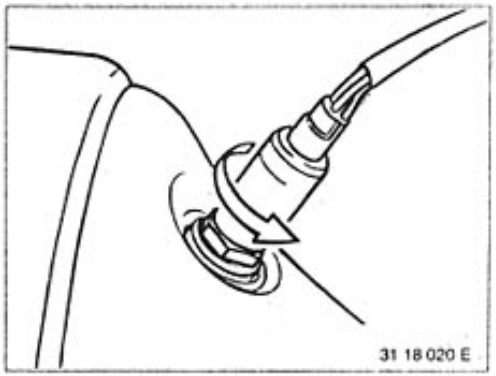

Removing and Installing Lambda oxygen sensors.

Unscrew and remove Lambda oxygen sensor

Installation:
Coat thread with Anti-Seize**.
Tightening torque 11 78 1AZ *

Note:
Do not clean Lambda oxygen sensors and do not bring into contact with lubricant.
Protect Lambda oxygen sensors when applying underbody protection.

* Refer to Technical Data
** Refer to BMW Parts Service

18 12 027 Replacing rear right muffler
(connection with welding sleeve)

This operation is identical to
operation 18 10 031

Following operations are required:

Measure pipe section to fit new rear muffler.

Mark out separating point.

Disconnect old rear muffler
(special tool 00 2 210)

Install new rear muffler with connecting sleeve
and align.

Tack weld connecting sleeve with a few inert
gas spot welds.

Remove exhaust system remove and weld
until gas-tight (inert gas).

Install complete exhaust system.

18 12 061 Replacing intemediate muffler (M73)

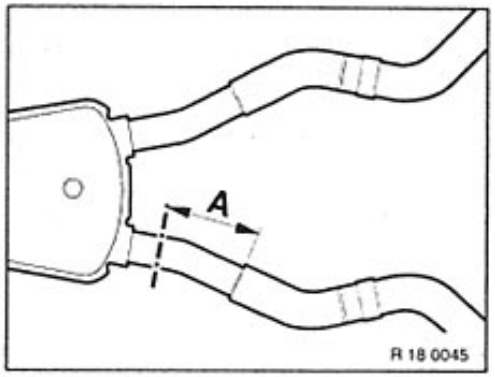

Remove both rear mufflers, refer to 18 10 031

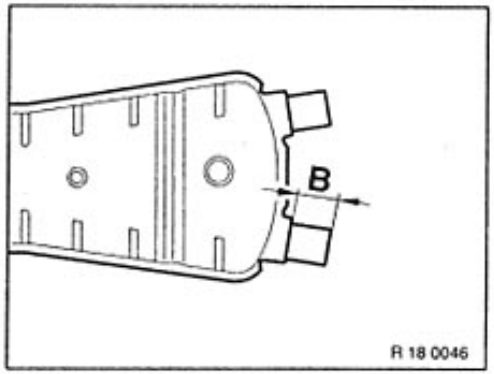

Note:
When defining the interfaces, take account of dimension (B) on new intermediate muffler.

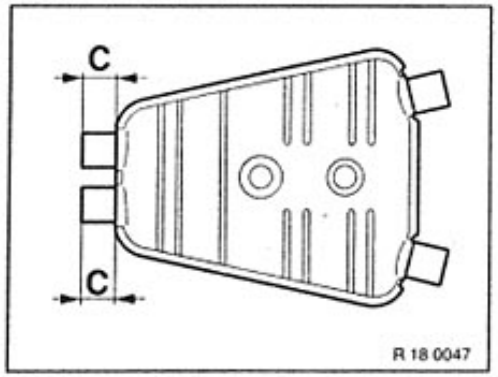

Measure off length (C) of pipe section on new intermediate muffler.

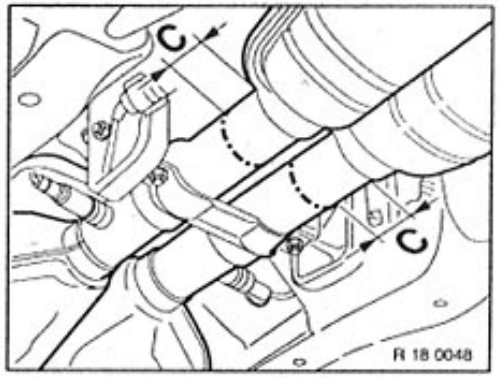

Transfer dimension (C) defined in this way to the installed intermediate muffler.

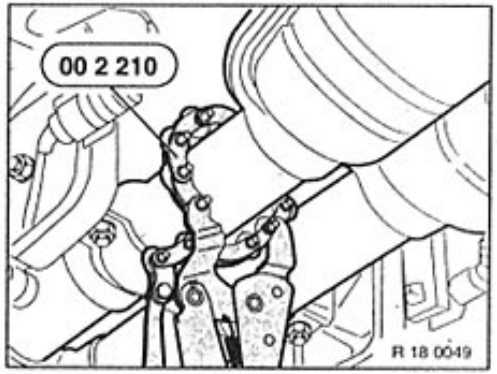

Disconnect exhaust pipes with special tool 00 2 210 and deburr.

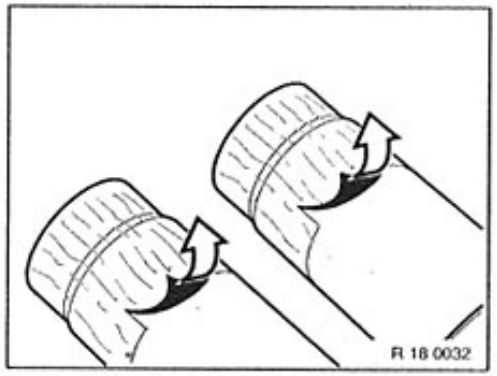

Caution!
Apertures on new intermediate muffler are sealed with adhesive film.
Remove complete adhesive film, including on contact faces of clamping sleeves.

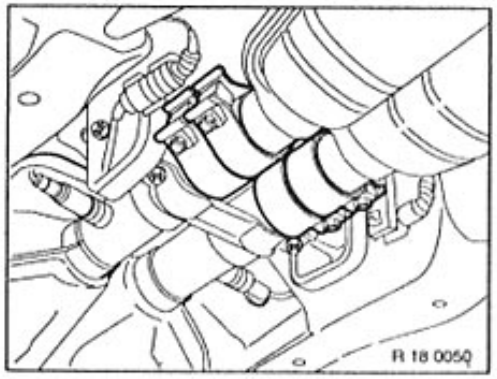

Secure new intermediate muffler with clamping sleeves on catalytic converter.
Nuts point downwards.

Ensure that the separating point is located in the centre of the clamping sleeve.
Ensure sufficient distance to adjacent components.

Install both rear mufflers.
refer to 18 10 031

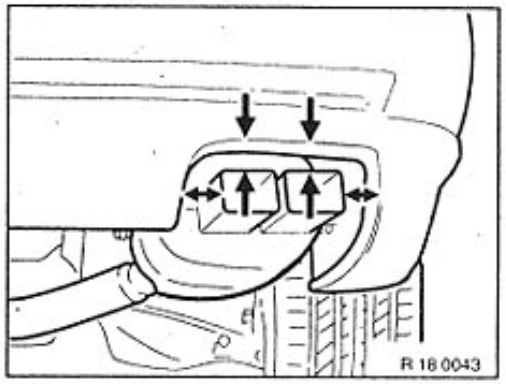

Align exhaust system and tighten down all clamping sleeves.

18 21 511 Replacing all exhaust mounts

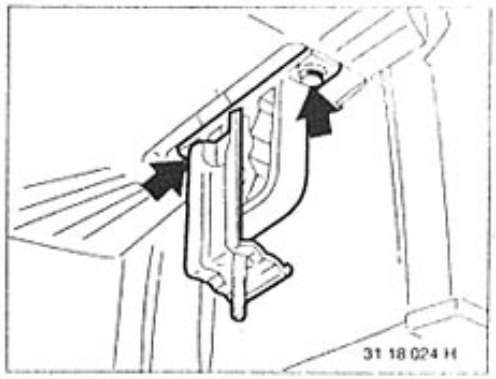

Replace rear exhaust mounts:

Unscrew rubber mount and bracket.

Caution!
Screw length M8 x 16
Longer screws may touch the underside of the battery.

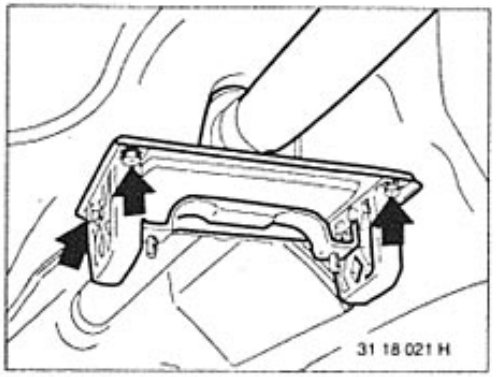

Replace central exhaust mount:

Unfasten bracket
Unscrew rubber mount.

Installation:
Do not tighten bracket until exhaust assembly has been fitted.

Unscrew bracket.

Installation:
Align bracket in upright position.

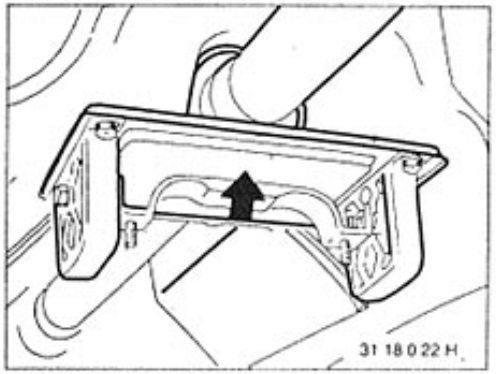

Installation:
Note reinforcement plate under rubber mount.

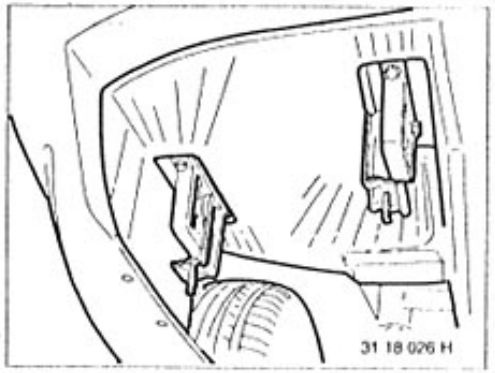

Arrangement of rear suspension points.

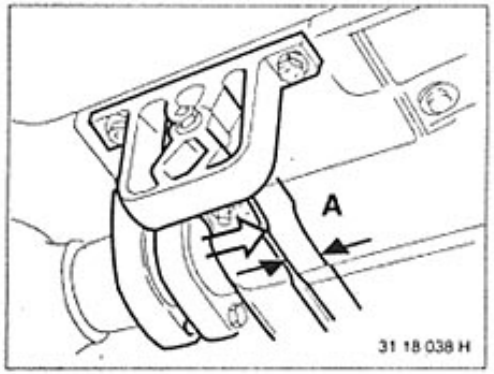

Installation:
Preload rubber mount towards front
A = 10 mm when fitting the exhaust assembly.

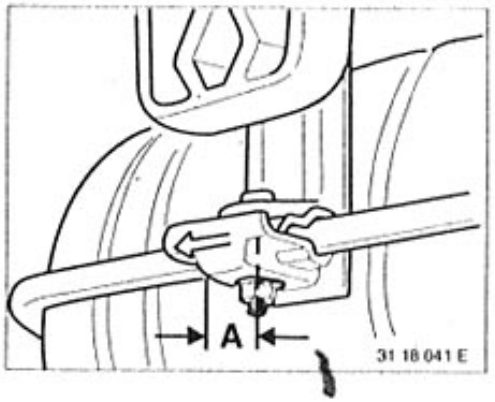

Installation:
Preload rubber mount towards front
A = 15 mm when fitting the exhaust assembly.

18 32 010 Removing and installing or replacing left or right catalytic converter (M73)

Remove Lambda oxygen sensors.
refer to 11 78 510 / 11 78 610
Repair Instructions for 7 Series E38

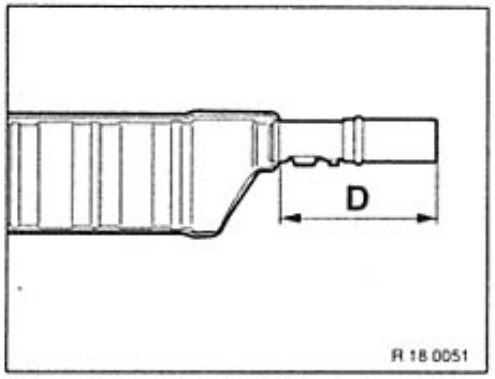

Measure length (D) of pipe section on new catalytic converter.

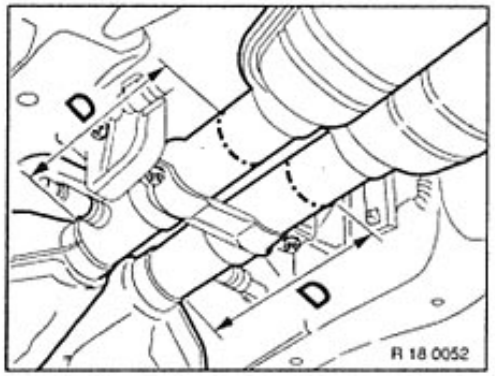

Transfer dimension (D) determined to the installed catalytic converter.

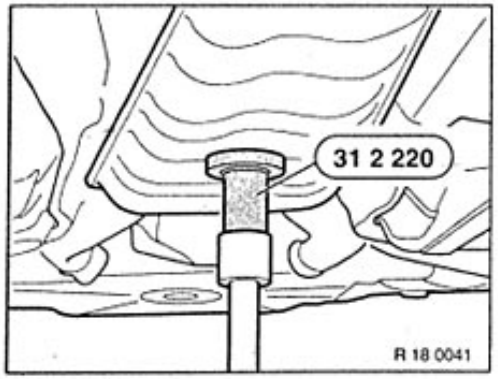

Support intermediate muffler with special tool 31 2 220.

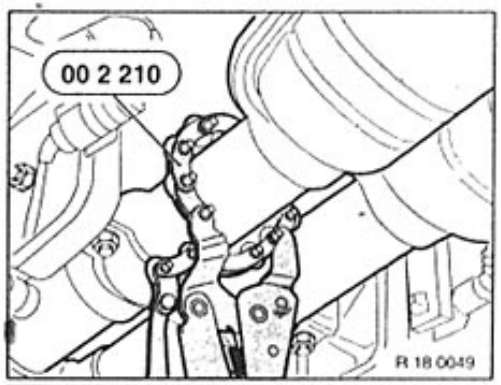

Disconnect exhaust pipe at separating point determined using special tool 00 2 210.

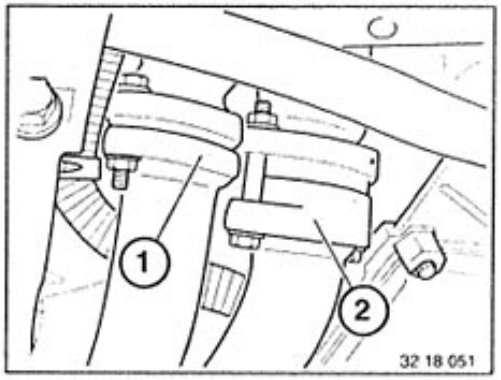

Unscrew and remove catalytic converter from exhaust manifolds.

Installation:
Replace self-locking nuts.
Coat threads with copper paste*.

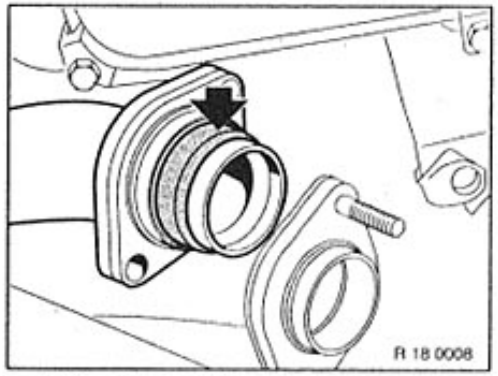

Installation:
Joint is only fitted with a sealing ring on inside pipes.

Check sealing ring and replace if necessary.

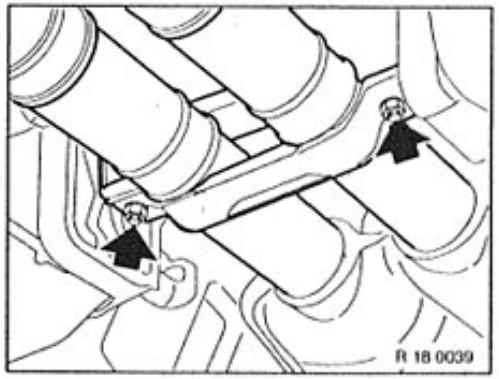

Unscrew and remove mount from catalytic converter.

Remove catalytic converter

* Source of Supply: BMW Parts Service

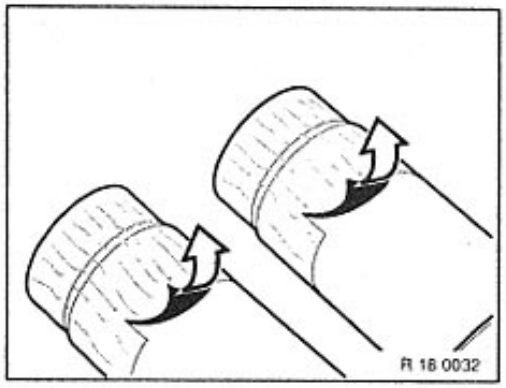

Caution!
Apertures on new catalytic converter are sealed with adhesive film.
Remove complete adhesive film, including on contact faces of clamping sleeves.

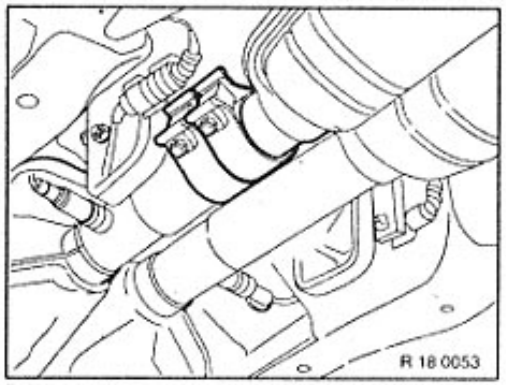

Secure new catalytic converter with clamping sleeve to intermediate muffler.
Nuts point downwards.

Ensure that separating point is in centre of clamping sleeve.
Ensure there is sufficient distance from adjacent components.

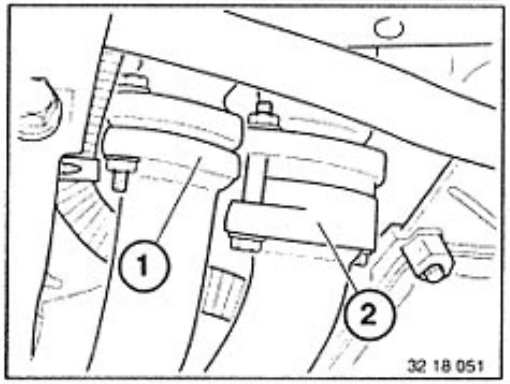

Screw on new catalytic converter with exhaust manifold.

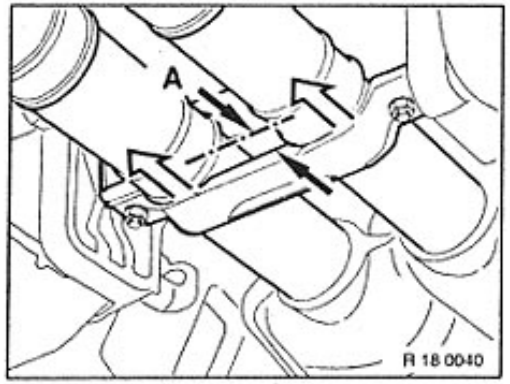

Screw down mount on catalytic converter

Installation:
Preload rubber mount in direction of travel
A = 10 mm.

21 Clutch

Scope of repair work, refer to “Repair Instructions for 7 Series E38”

23 Manual transmission

Additional operations – refer to Construction Group Repair Instructions.

00 11 229 REPLACING OIL IN MANUAL TRANSMISSION

The oil should only be replaced at operating temperature.
Remove drain plug (1) and filler plug (2).
Drain oil.

Note
Dispose old oil.
Clean and screw in drain plug.
Tightening torque*.
Pour in new oil through filler opening.
Refer to label or Operating Fluids for grade of oil.
Oil volume*.
Oil must run out of the filler opening.
Screw in filler plug (2).
Tightening torque*.

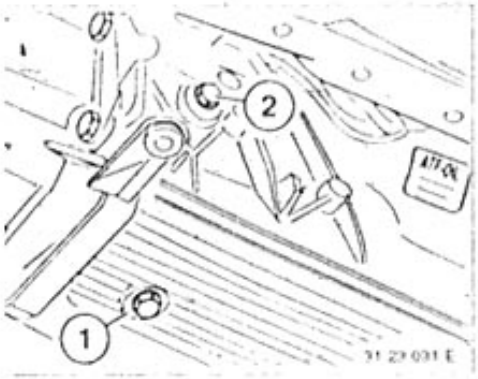

Refer to Specifications

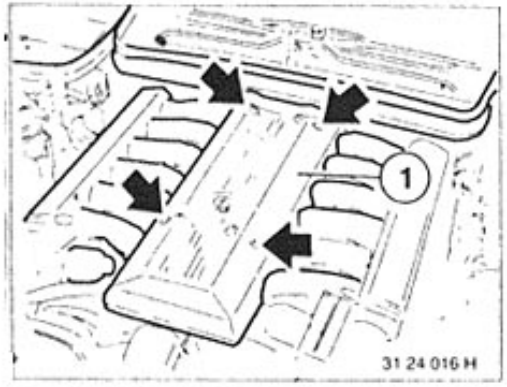

23 00 025 Removing and installing transmission (engine M 70/ transmission S 6 S 560 G)

Disconnect ground lead from terminal.

Caution!
When ground lead is disconnected, fault memories in control units are cancelled.
For this reason, first read fault memories with tester and print out any faults in the system.
Remove cover (1).

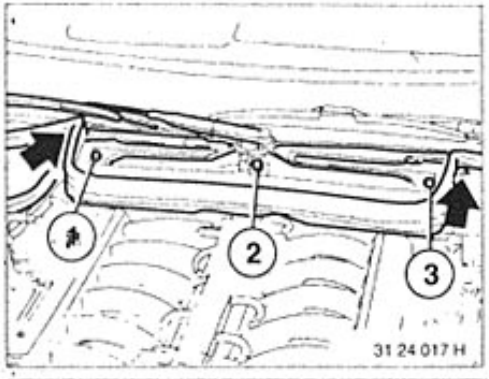

Partially remove rubber seal.
Twist mounting (1 ... 3).
Remove screws on left and right sides.

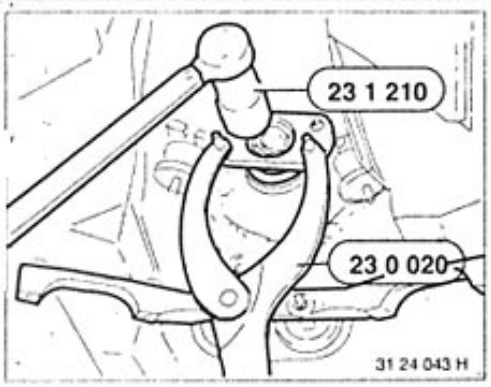

Lift off trim (4) and microfilter (5).

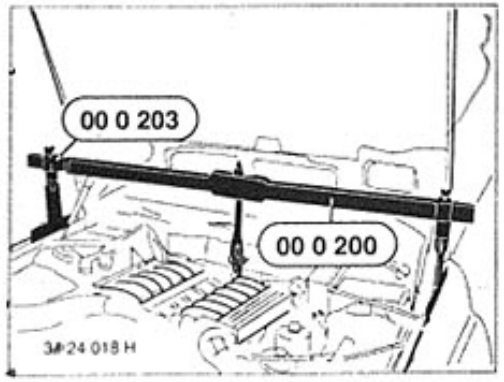

Caution!
To prevent damage (risk of leaks) to the heating pipe connections on the engine firewall, the engine must be supported on special tool 00 0 200 before the transmission is lowered.
Fit special tool 00 0 200 together with extension 00 0 203 and connect to rear lug.
Pre-tension chain.
Remove complete exhaust system 18 00 020.

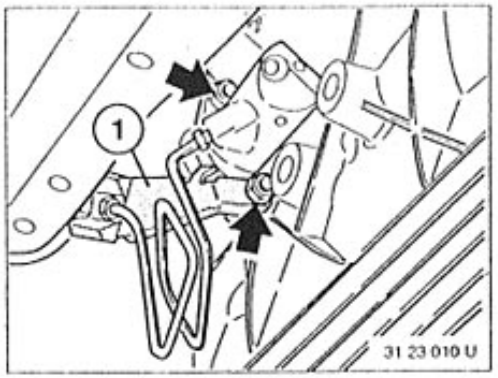

Remove clutch slave cylinder from transmission.
Pressure line remains connected.

Installation:
Secure bracket (1) for pressure line at same time.

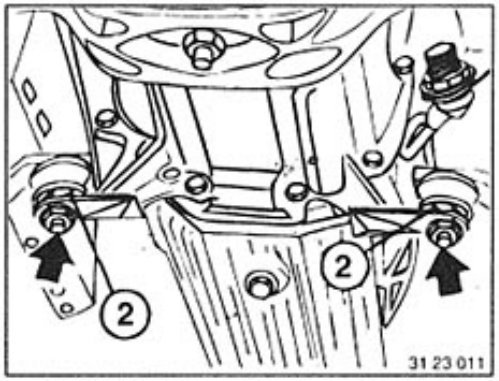

Remove brackets on left and right for securing exhaust system.

Installation:
Install rubber mount with lug (2) facing recess.

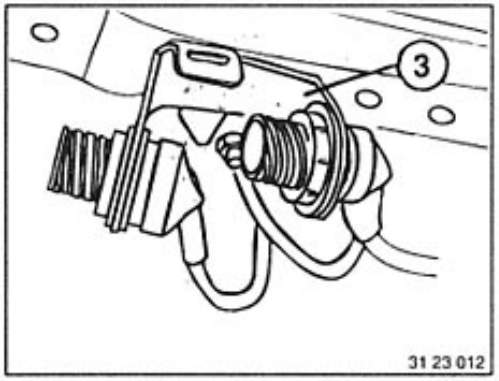

Unfasten bracket (3) for Lambda oxygen sensor plug.

Remove line for Lambda oxygen sensors from brackets.

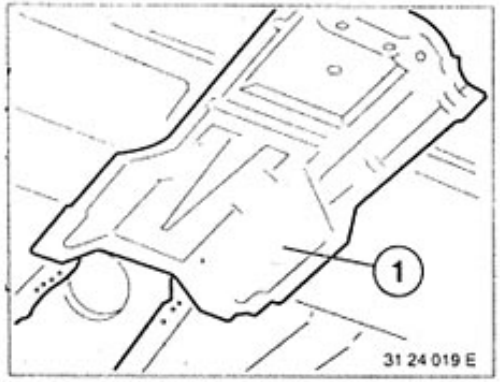

Remove heat shield (1).

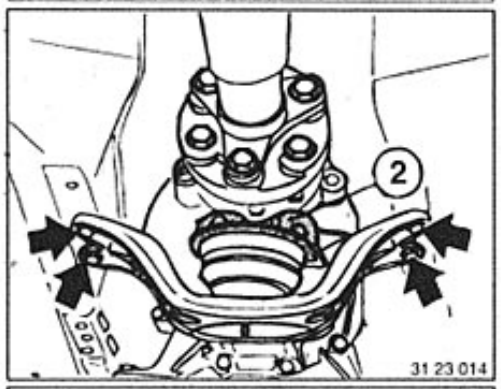

Unfasten crossmember from body.
Remove carrier (2) from transmission.

Installation:
Center transmission, see Main Group 26.
Tightening torque 24 71 2AZ*

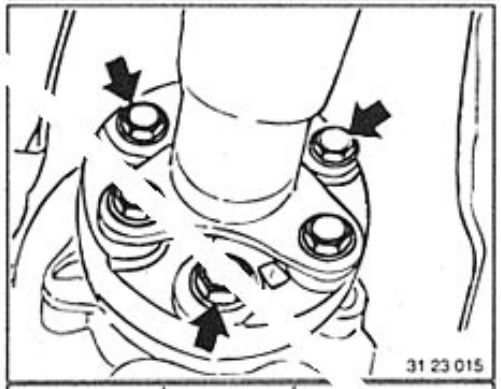

Remove flexible coupling from transmission.

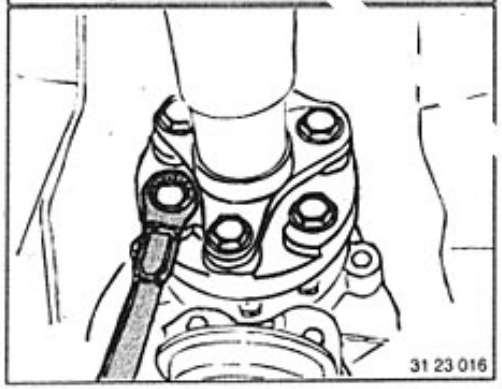

Installation:
Tighten joint disk to correct torque.

Tightening torque 26 11 1AZ*

* Refer to Technical Data

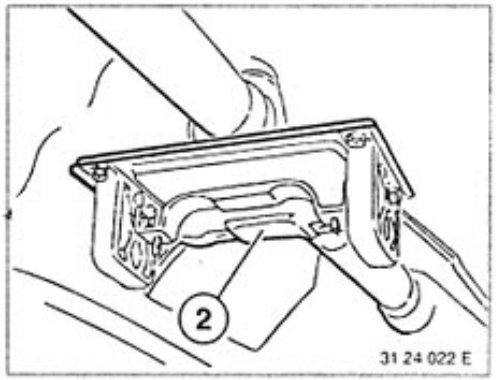

Remove exhaust bracket (2).

Installation:
Tightening torque*.

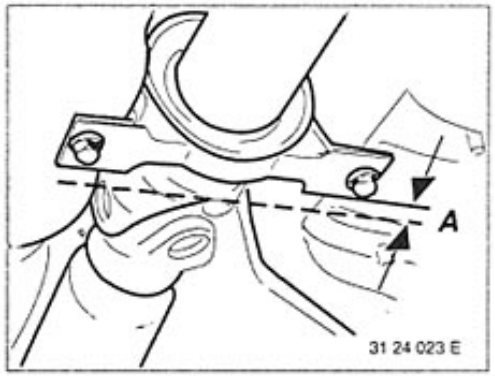

Remove center mount.

Installation:
Preload center mount in direction of travel
2 ... 4 mm (A).
Tightening torque 26 11 6AZ*

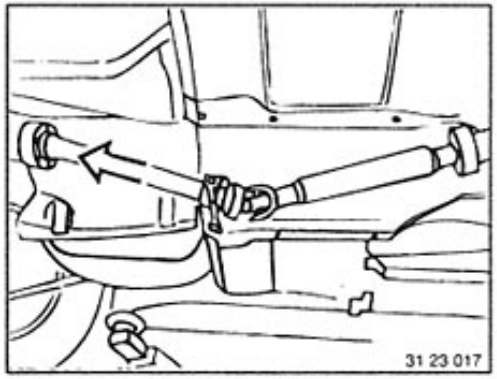

Slide propeller shaft in direction of constant velocity joint.
Tilt propeller shaft on center mount, withdrawing guide bearing from output spigot on transmission.

Caution!
Tie up propeller shaft.

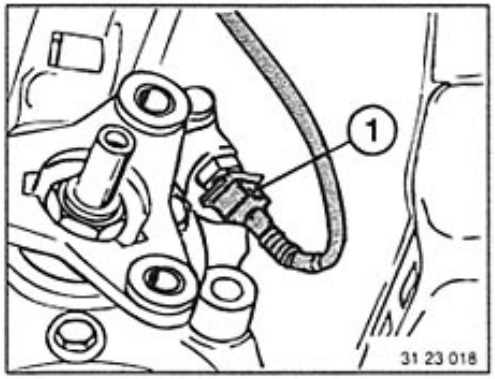

Remove plug (1) for reverse gear.

* Refer to Technical Data

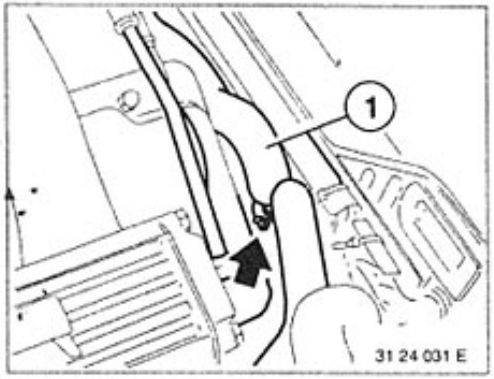

Lower vehicle.
Lower engine with spindle on special tool 00 0 200 until there is a gap between engine and rear heating pipe connection (1) of approx. 1 mm (visual check).

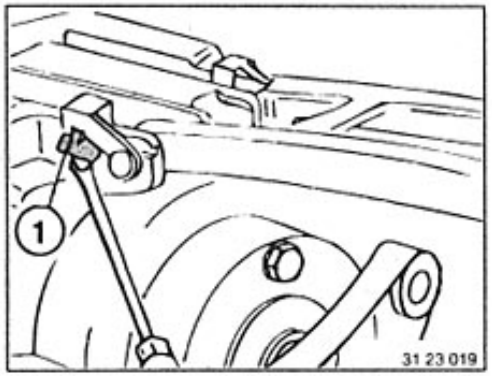

Lever retaining lug (1) out with a screwdriver and twist bolts upwards.
Remove bearing pins on left and right sides.

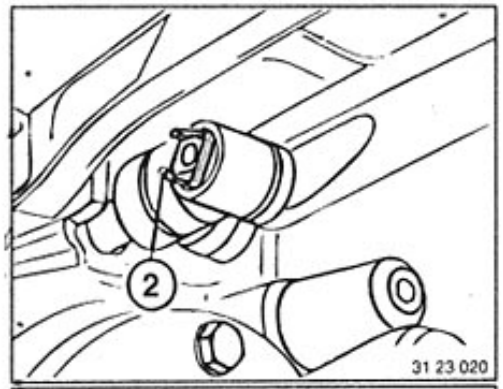

Remove (2) retaining fixture.
Pull out selector rod sideways.

Caution!
Note use of plastic washers.

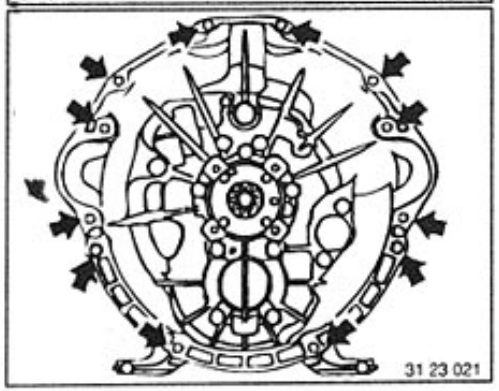

Disconnect transmission from engine flange.

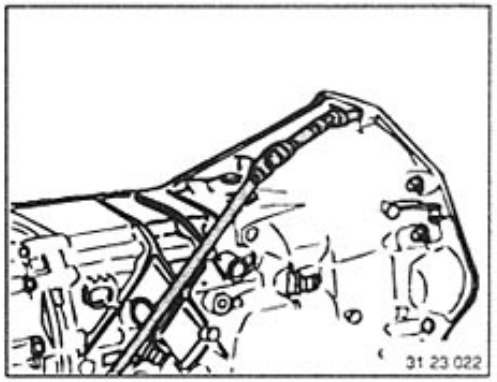

Unfasten Torx screws with Torx insert.
Use approx. 100 cm extension.

Caution!
To avoid increasing the break-loose torque, always fit washers.
Tightening torque 23 00 1AZ*

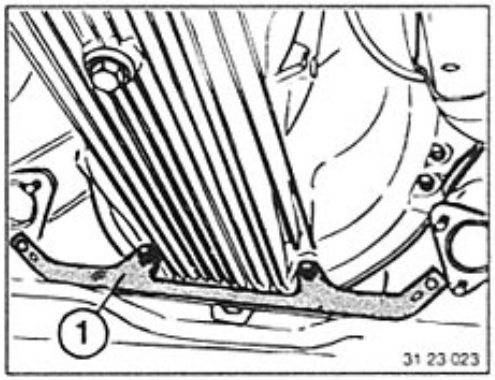

Installation:
Use to secure exhaust bracket (1).

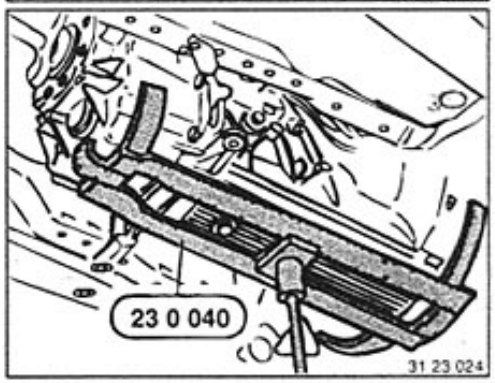

Fit tool 23 0 040 and jack to transmission.
Remove transmission from engine.

Caution!
The lifting fixture may only be moved when fully lowered while transmission is attached.

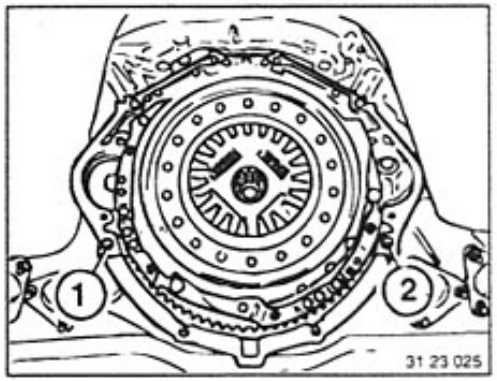

Caution!
Before fitting the transmission, check that guide sleeves (1 and 2) are fitted. If necessary, convert or replace guide sleeves on transmission.
After installation, check oil level and top up if necessary.

* Refer to Technical Data

23 00 025 Removing and installing transmission (engine M 60/ transmission S 6 D 420 G)

Disconnect ground lead from battery.
Caution!
When ground lead is disconnected, the fault memories in the control units are cancelled. For this reason, first read out the fault memory using the tester and print out any faults which appear.
Remove complete exhaust system 18 00 020.

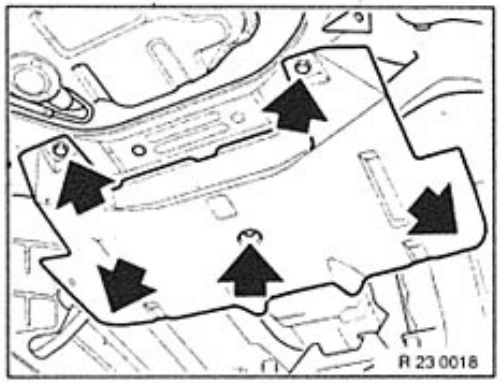

Remove splash guard.

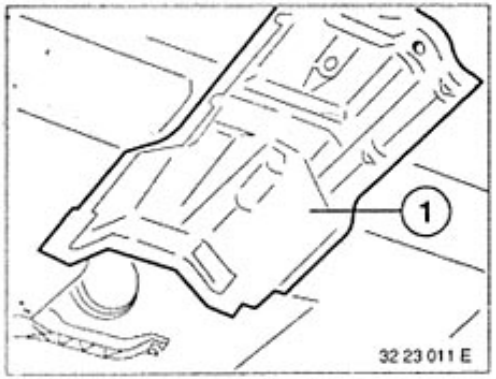

Remove heat shield (1).

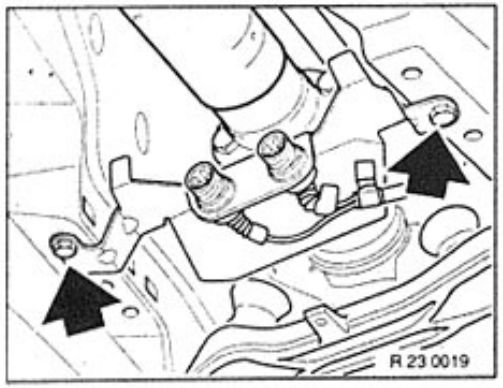

Remove bracket for Lambda oxygen sensor plug.

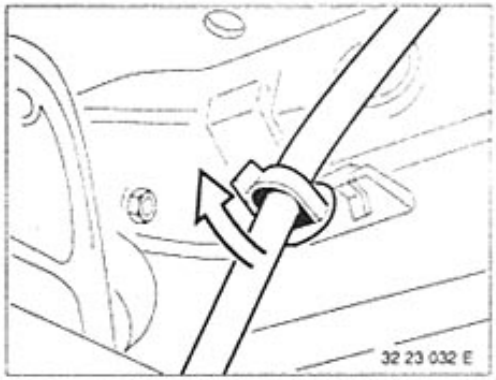

Unclip cable bracket from transmission.

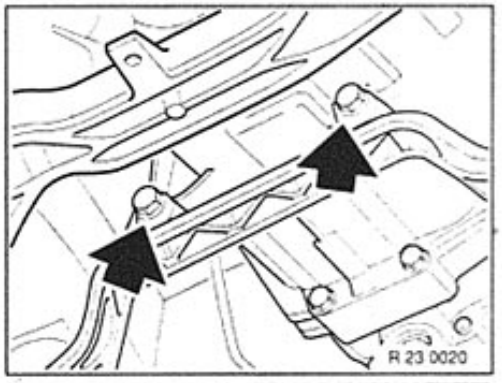

Remove exhaust bracket from transmission.

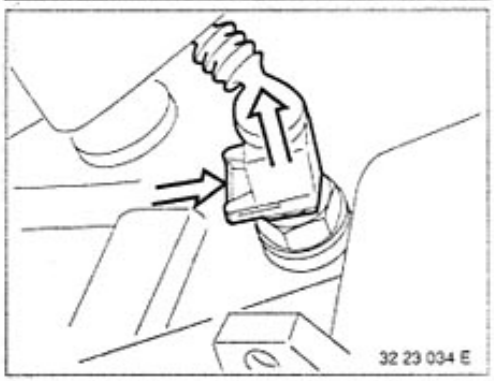

Remove plug for reversing lights.

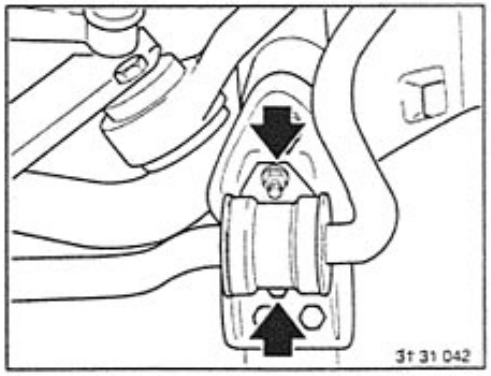

Unscrew stabilizer on left and right sides and leave hanging downwards.

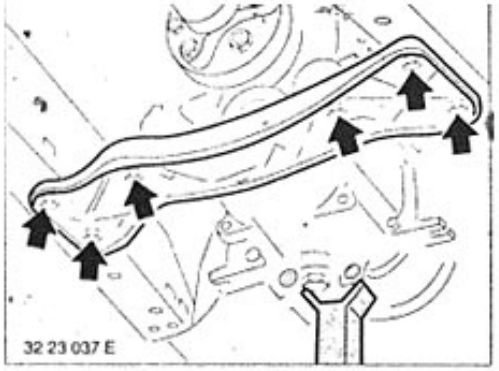

Support transmission.
Unscrew crossmember.

Installation:
Center the transmission (see Gr. 26)
Tightening torque 23 71 2AZ*

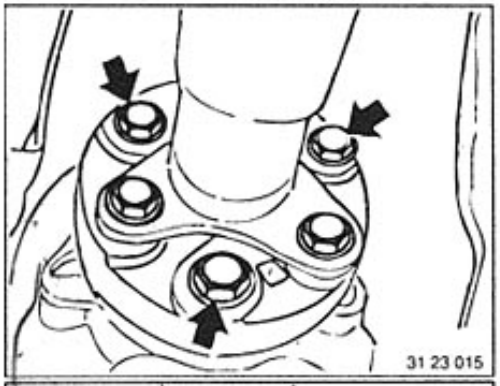

Unscrew joint disk from transmission.

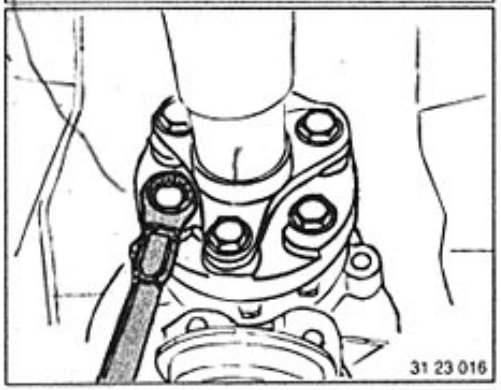

Installation:
Replace stop nuts.
Tightening torque 26 11 1AZ*

Caution!
To prevent torsional stress on joint disk, only tighten nuts on side of flange, provided that the design permits this.

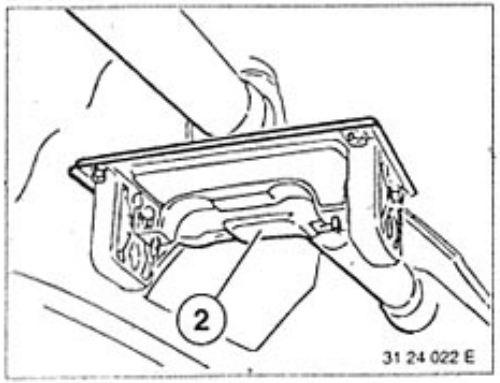

Remove exhaust bracket (2).

* Refer to Technical Data

Remove center mount.

Installation:
Preload center mount in direction of travel 2...4 mm.
Tightening torque 26 11 6AZ*

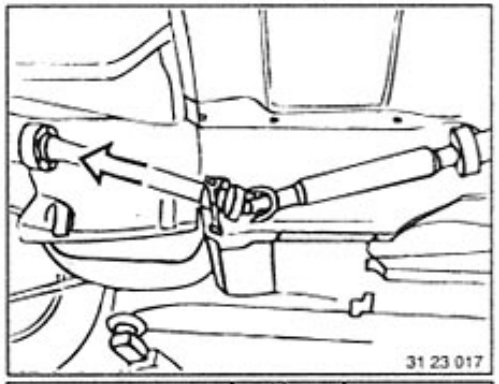

Slide propeller shaft in direction of constant velocity joint.
Tilt propeller shaft on center mount, removing guide bearing from output spigot of transmission while doing so.

Caution!
Tie up propeller shaft.

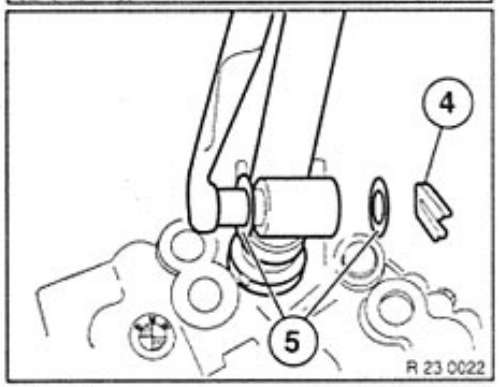

Lower transmission.
Lift out retaining fixture (4) and remove disk (5).
Note O-rings.

Remove selector rod.

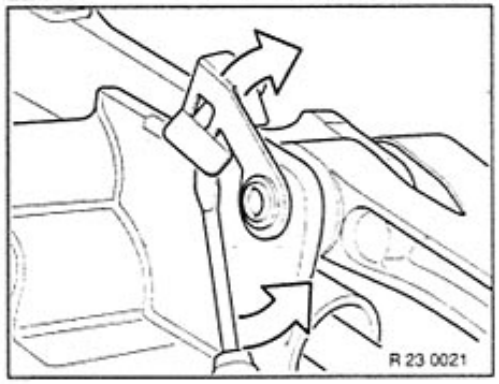

Lift spring off lug of housing with screwdriver and tilt upwards.

* Refer to Technical Data

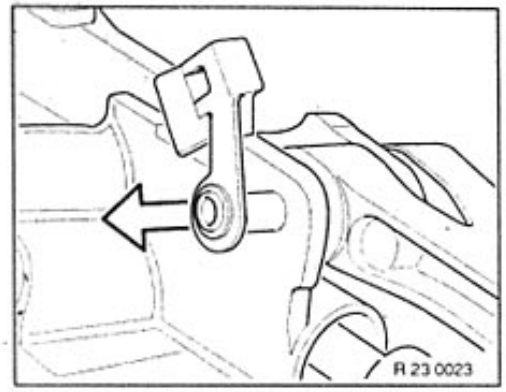

Remove bearing pin.
Remove shift console

Installation:
Apply light coat of Molykote- Longterm 2** grease.

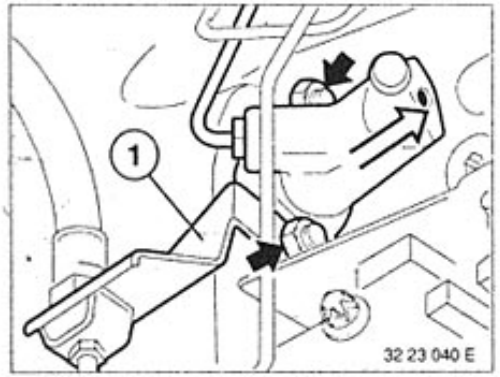

Remove clutch slave cylinder.
Pressure line remains connected.

Installation:
Secure bracket (1) for pressure line.

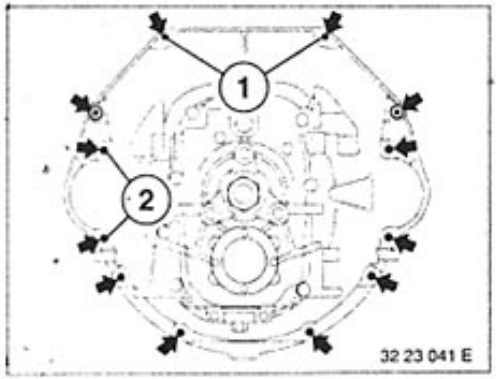

Disconnect transmission from engine flange. (Torx- screws).

Lift transmission out backwards.

Note:
The screws (1) = Torx E 10
all others are Torx E 12
The screws opposite the starter motor are fitted with nuts on the front side.

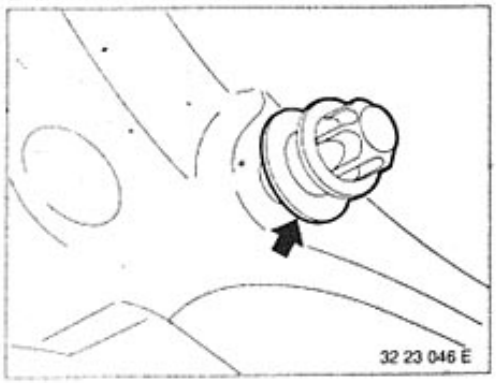

Installation:
Note that washers are fitted to the Torx screws.
Tightening torque 23 00 1AZ*

* Refer to Technical Data
** Source of Supply: BMW Parts Service

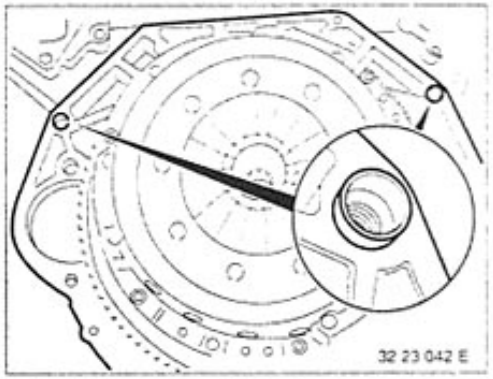

Note hollow bushes.
If necessary, move or replace hollow bushes on transmission.

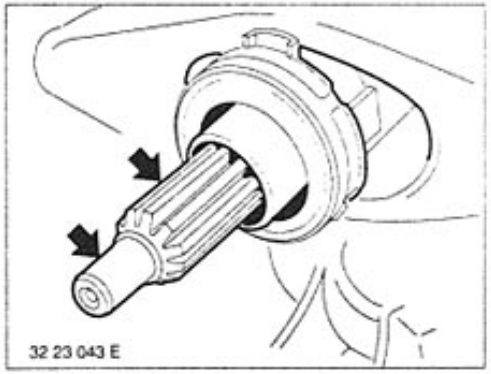

Installation:
Apply light coat of Klüber Mikrolupe GL 261** to wedge tapers and guide spigot.

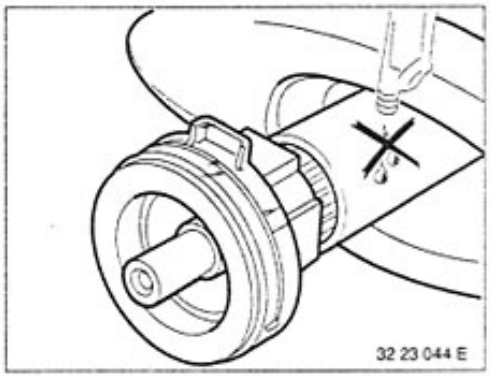

Caution!
From 3. 92, release bearings will be fitted with plastic guides.
No grease should be applied to sliding face of guide sleeve on bearings with plastic guides.
If this advice is ignored, the bearing can stick to the guide sleeve.

** Source of Supply: BMW Parts Service

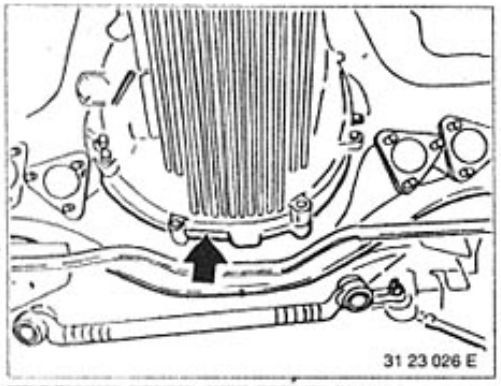

23 00 035 Installing replacement transmission

Remove transmission 23 00 025.
Transmission designation:
BMW Code* on front section of housing.

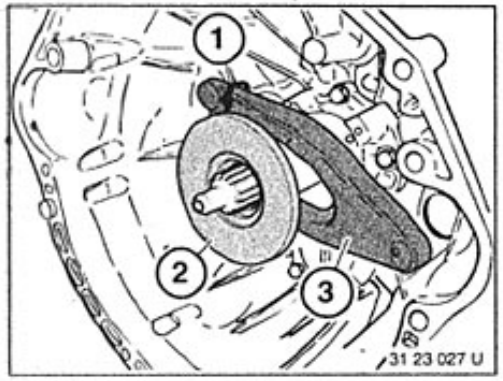

Lift retaining spring (1) off release lever.
Fit release unit (2) and release lever (3).

Note:
Apply light coat of Microlupe GL 261** to the taper grooves and guide spigot of the transmission input shaft.

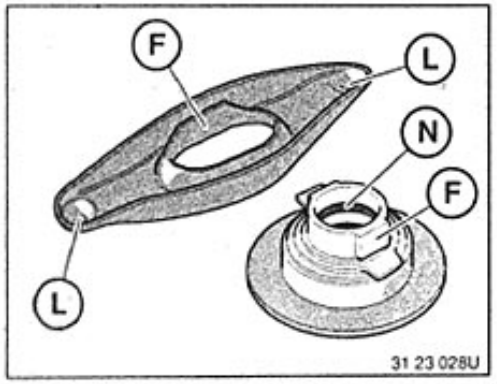

Installation:
Fill lube groove (N) with Molykote Longterm 2.
Apply light coat of Molykote Longterm 2 ** grease to guides (F) and bearings (L).
If this advice is ignored, the bearing can seize on the guide sleeve.

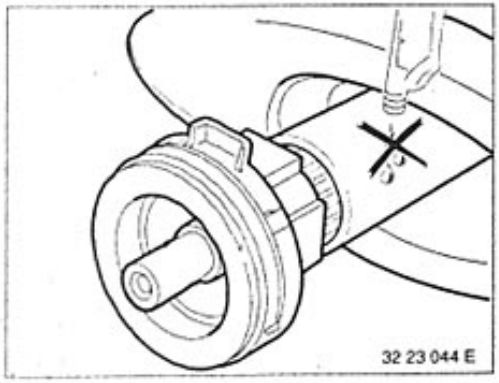

Caution!
From 3. 92, release bearings are being fitted with plastic guides.
No grease should be applied to sliding face of guide sleeve on bearings with plastic guides.
If this advice is ignored, the bearing can seize on the guide sleeve.

* Refer to Parts Catalogue
** Source of Supply: BMW Parts Service

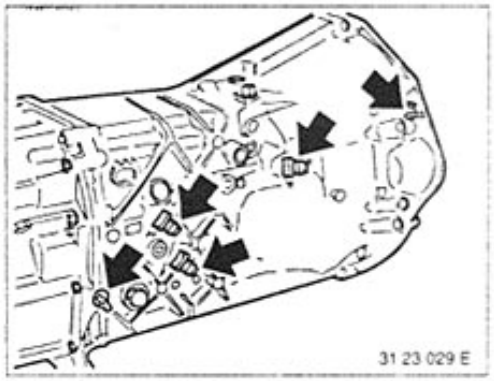

Fit mounts on Lambda oxygen sensor line.

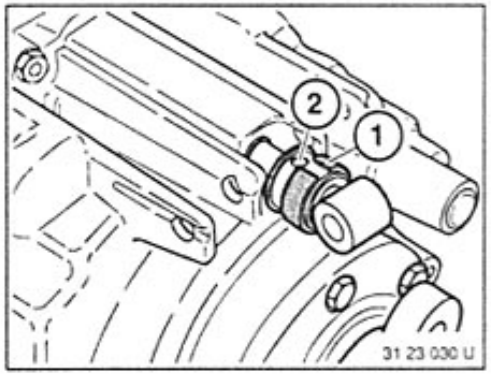

Fit selector rod joint.
Slide back retaining sleeve (1).
Drive out cylinder pin (2).

Caution!
The transmission is supplied with an oil fill.
After installation of the transmission, it is then only necessary to perform an oil level check.

23 11 612 Replacing guide tube for clutch release mechanism
- transmission removed -

Remove and install clutch release unit / lever.
This work is described in section on removing, installing or replacing the clutch release unit / lever.
Refer to 21 51 000.

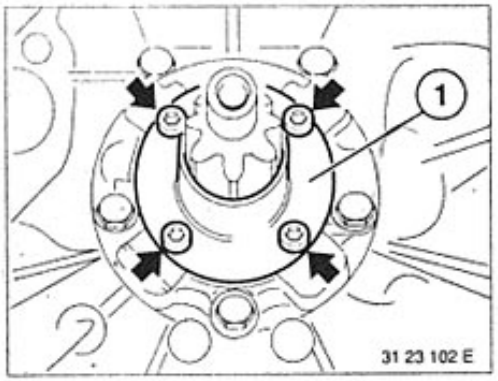

Unfasten screws.
Lift up guide tube (1).

Installation:
Tightening torque 10 Nm *

23 12 056 Replacing radial seal for output flange

Remove front propeller shaft and center mount.
Tie propeller shaft to one side.
This work is described in section on removing and installing the complete propeller shaft.
See 26 11 000.

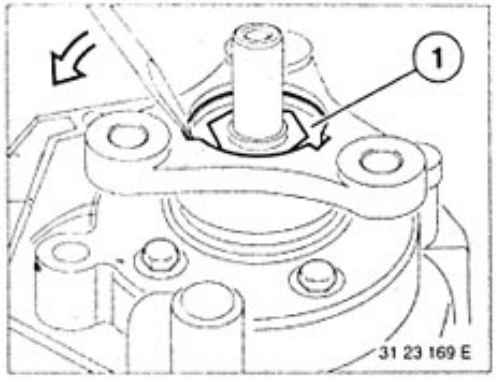

Lift out retaining plate (1).

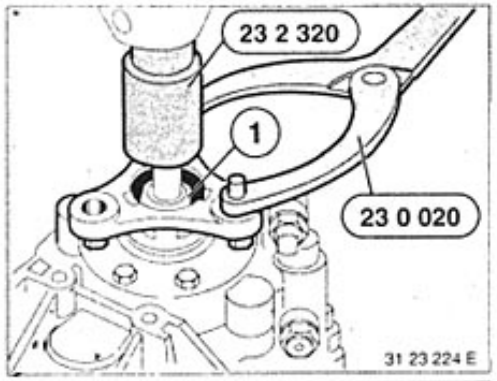

Brace output flange with special tool 23 0 020.
Use socket wrench insert 23 2 320 to unfasten collar nut (1).

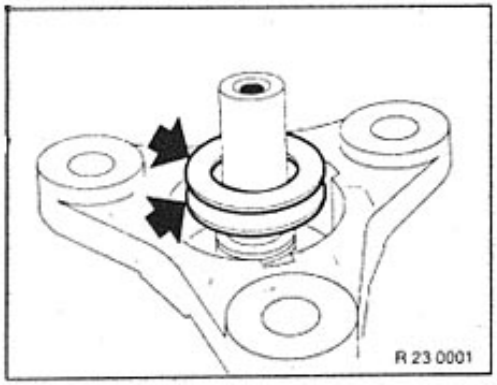

Note:
Two washers are located beneath the collar nut.
Refit spacers of same thickness.

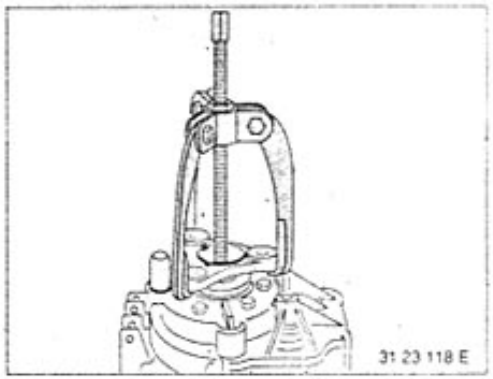

Remove output flange with standard extractor tool.

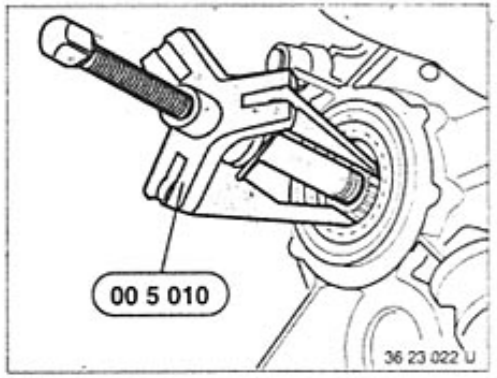

Remove radial seal with special tool 00 5 010.

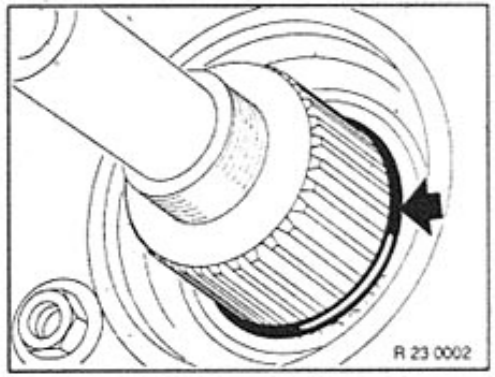

Only on transmission S6S 560 G:

Fit new O-ring to the output shaft

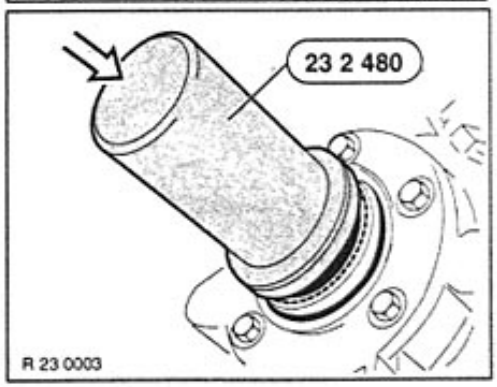

Coat sealing lip of radial seal with oil.
Drive radial seal firmly home with special tool 23 2 480.

Caution!
Use plastic hammer to drive home.

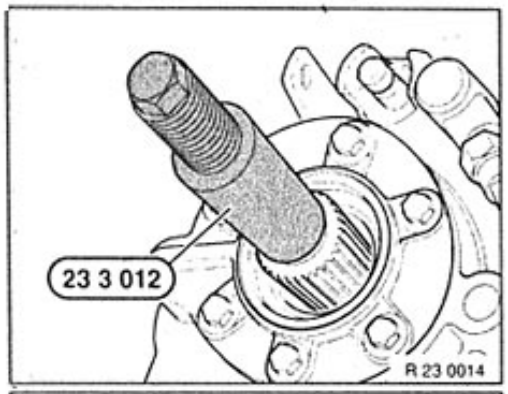

Screw spindle 23 3 012 of special tool 23 3 010 to the output shaft.

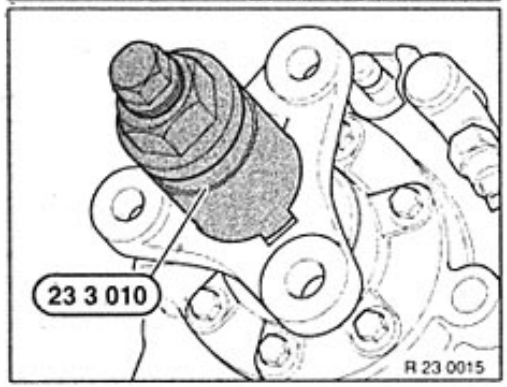

Apply oil to taper shaft.
Fit output flange top spline and attach with special tool 23 3 010.
(Brace output flange with special tool 23 0 020).
Tightening torque 180 ... 200 Nm.

Remove special tool.

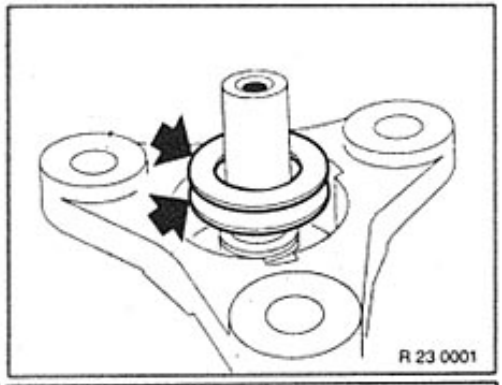

Install shims (1) (2 off).

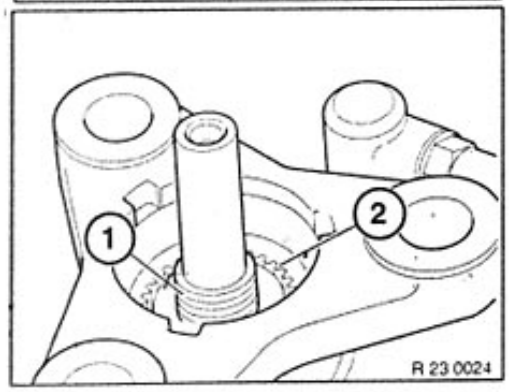

Coat thread (1) with screw retaining compound Loctite 243.

On transmission S6S 420G,
also coat locating face (2) with Loctite 518 for sealing purposes.

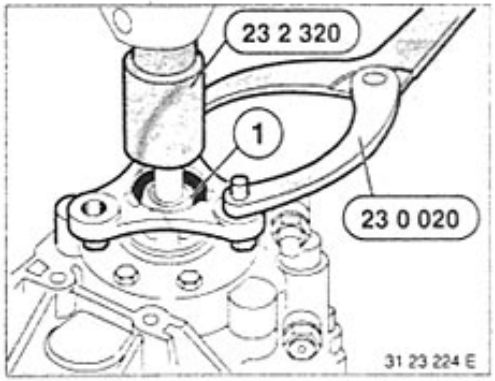

Brace output flange with special tool 23 0 020.
Tighten collar nut (1) with socket wrench insert 23 2 320.

Tightening specification:
1. 190 Nm preload
2. loosen
3. 120 Nm tighten

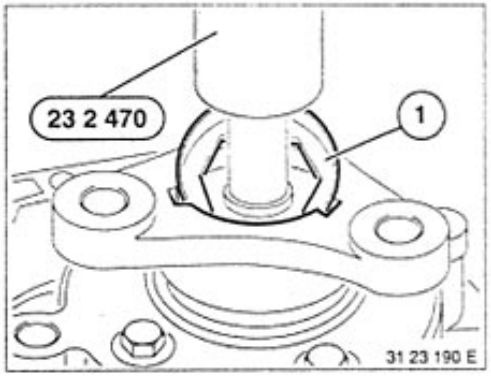

Drive new retaining plate (1) into place with special tool 23 2 470.

23 12 087 Replacing gaiter on selector shaft
(transmission S6S 560 G)

Remove front propeller shaft and center bearing.
Tie propeller shaft to one side.
This work is described in the section on removing and installing the complete propeller shaft.
See 26 11 000.

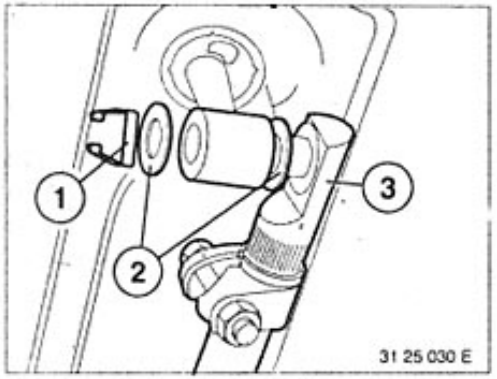

Lift out retaining fixture (1).
Remove disk (2).
Remove selector rod (3).

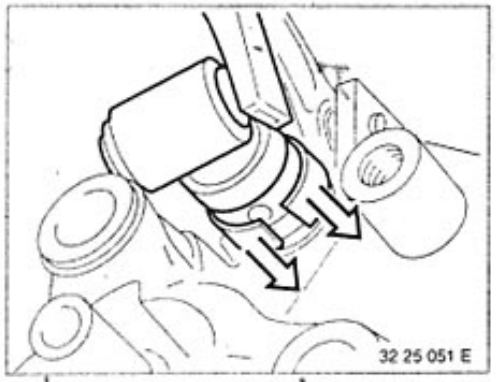

o Removing selector rod joint

Select " R " gear.
Lift retaining sleeve out of groove and slide forwards.

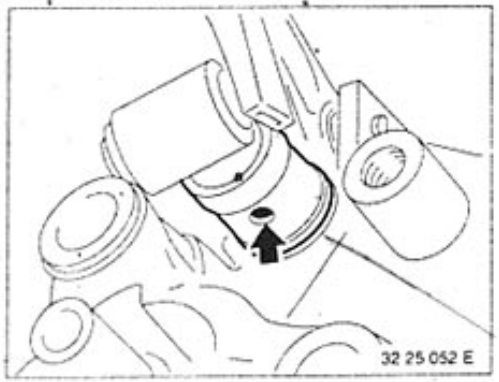

Drive out pin.
Withdraw selector rod with joint.

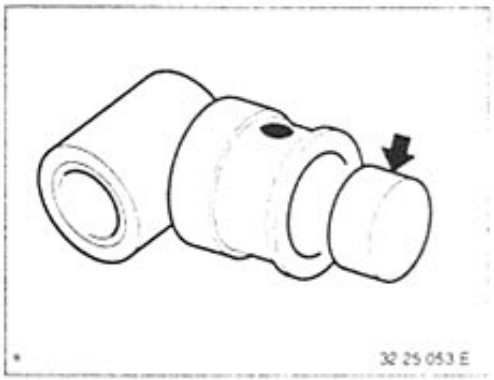

Installation:
Inspect damping disk in the joint, replacing if necessary.

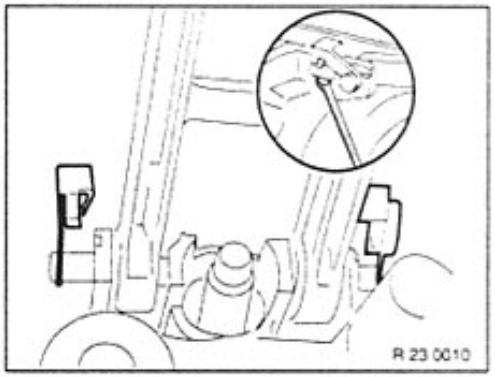

o Replacing gaiter.

Lift retaining lugs on retaining pins in shift console with a screwdriver and bend clips upwards.
Withdraw bearing pin.

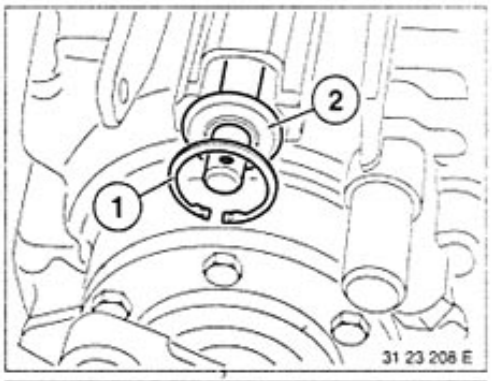

Move selector rod into idle setting.
Lift out retaining ring (1).
Remove disk (2).

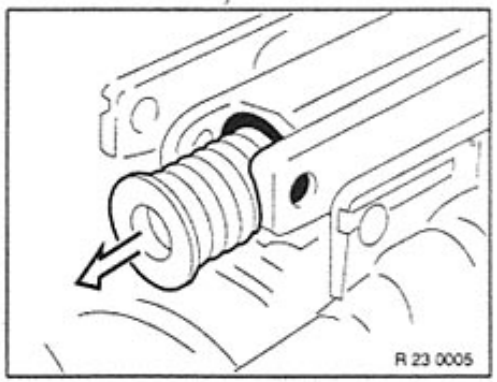

Remove gaiter.

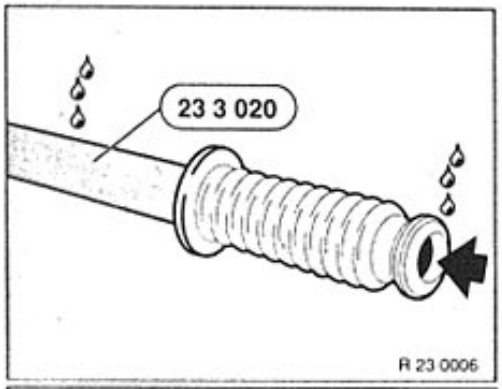

Apply light coat of oil to inside edge of gaiter beside hose spring.
Slide special tool 23 3 020 into gaiter.

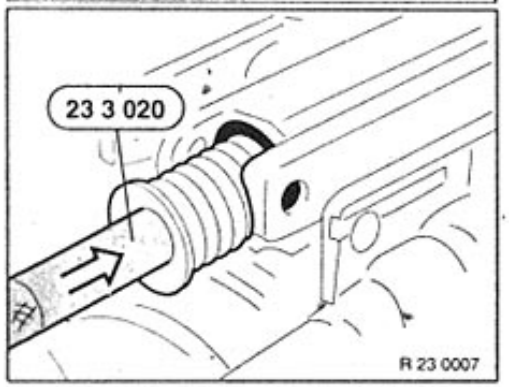

Slide gaiter firmly home on selector shaft with special tool 23 3 020.

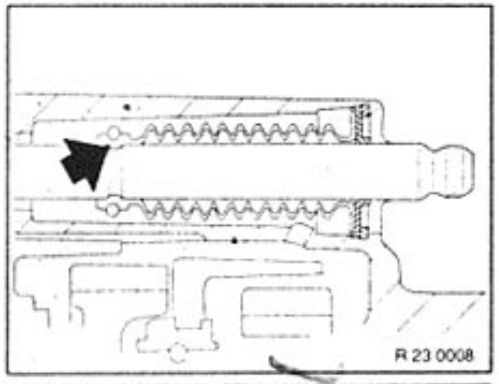

Grip gaiter.
Slowly unscrew special tool 23 3 010.
Pull gently on gaiter to check that the gaiter on the hose spring has engaged in the groove on the selector shaft.

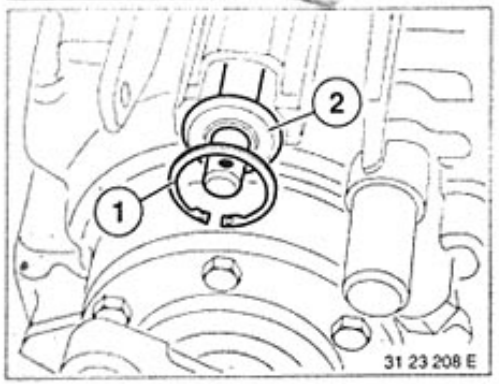

Fit disk (2).
Install retaining ring (1).

23 12 506 Replacing radial seal on input shaft

- transmission removed -

Clutch release mechanism / remove and install lever.
This work is described in the section on removing, installing or replacing the clutch release mechanism / lever.
See 21 51 000.

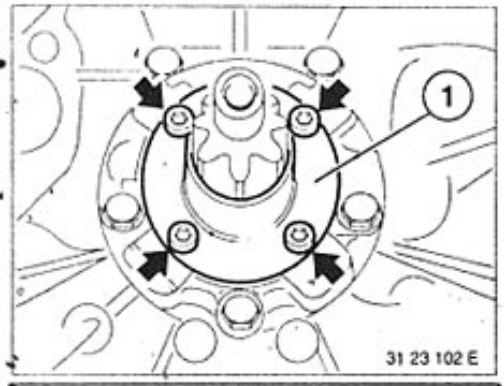

Remove guide tube (1).

Installation:
Tightening torque 10 Nm *

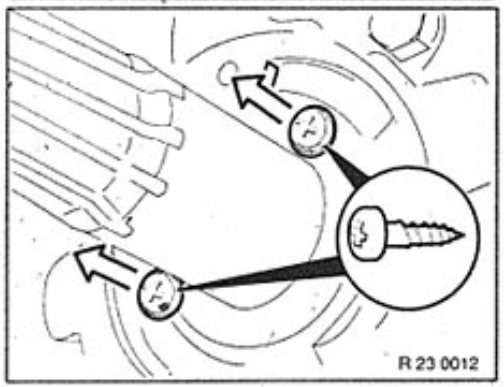

o Removing radial seal.

Locate bores in radial seal with a scribing tool and punch out.

Insert suitable size of self-tapping screw in the holes.
Remove radial seal by pulling self-tapping screws (pliers).

Caution!
Do not damage the surface of the shaft

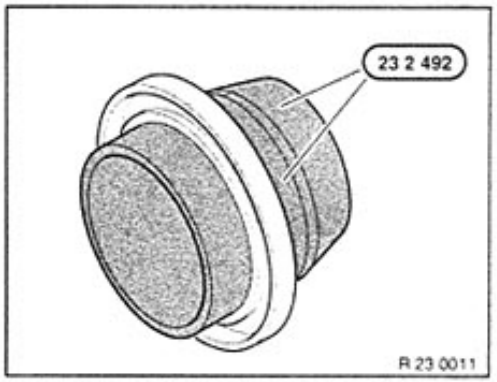

o Installing radial seal

Assemble cap and sleeve of special tool 23 2 492.

Coat radial seal with oil and slide onto sleeve.
Remove cap.

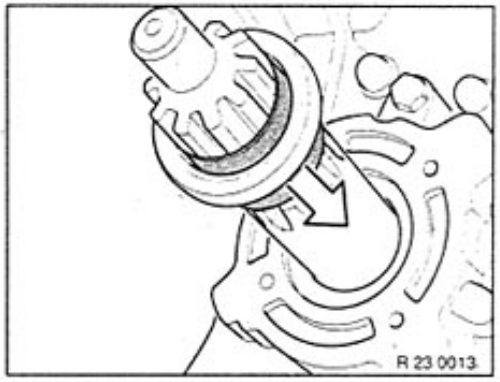

Slide sleeve and radial seal onto input shaft.

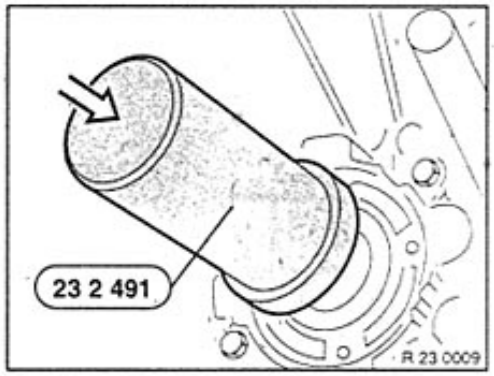

Drive radial seal firmly home with special tool 23 2 491.

Remove special tool 23 2 492 (sleeve) from input shaft.

Caution!
Use plastic hammer to drive seal home.

Note:

After installation of the transmission it may be necessary to check the oil level.

* Refer to Technical Data

23 21 007 Replacing output flange on transmission

Remove front propeller shaft and center bearing, see 23 00 022.

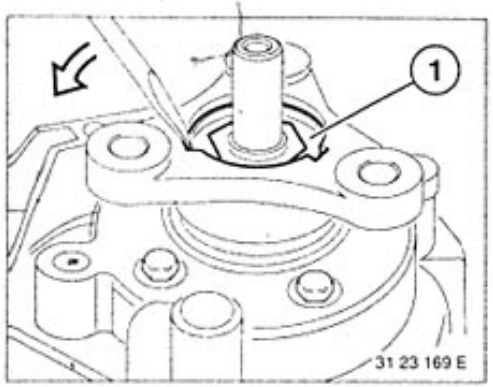

Lift out tab washer (1).

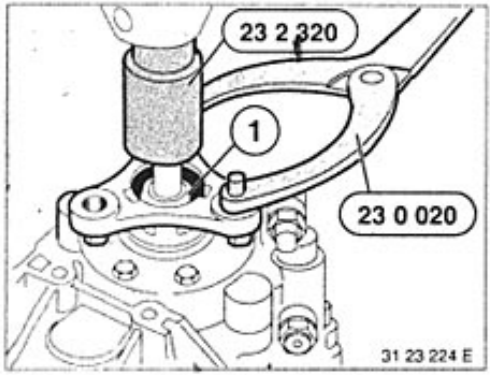

Brace output flange with special tool 23 0 020. Use socket wrench insert 23 2 320 to unfasten collar nut (1).

Remove spacers (2 off).

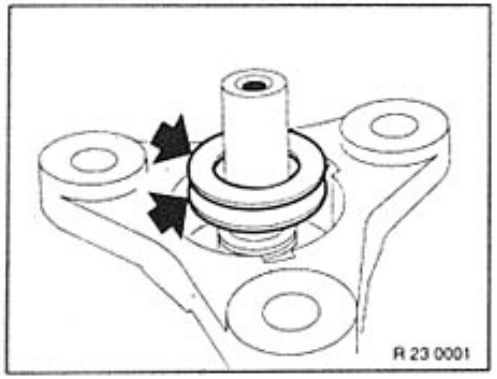

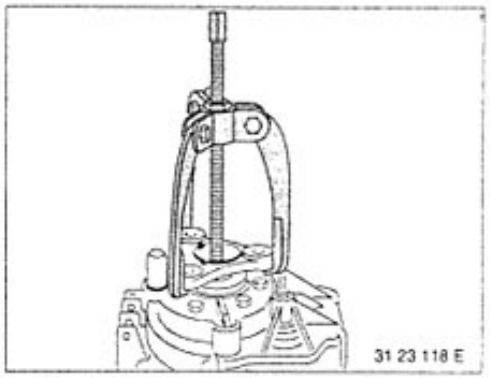

Remove output flange using standard extractor tool.

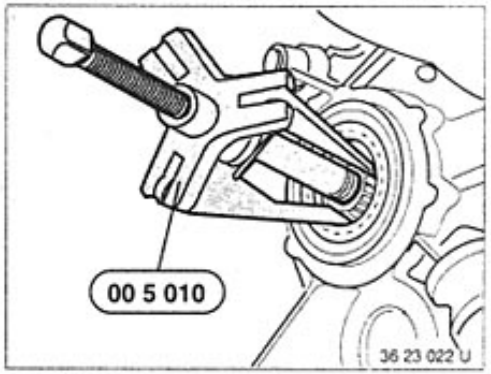

Remove radial seal using special tool 00 5 010.

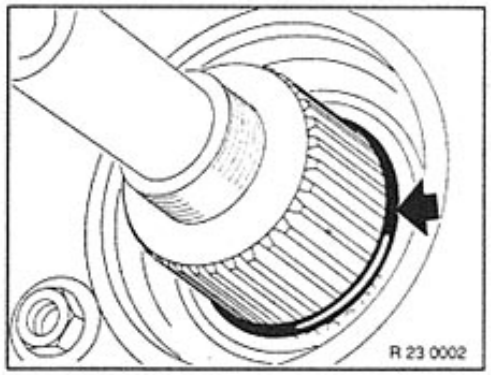

Only on transmission S6S 560G:

Fit new O-ring to the output shaft

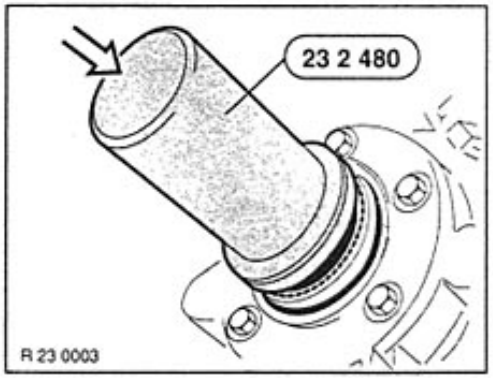

Apply coating of oil to sealing lip of radial seals.
Drive radial seal down flush using special tool 23 2 480.

Caution!
Use plastic hammer to drive seal home.

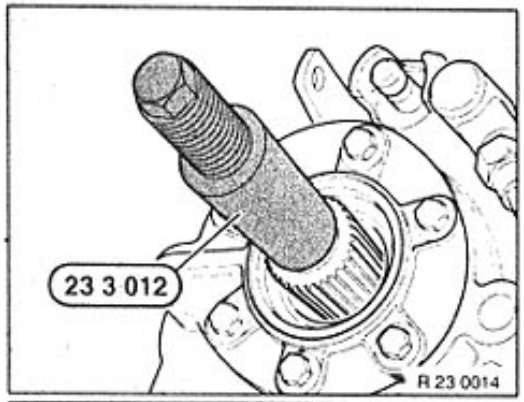

Screw spindle 23 3 012 of special tool 23 3 010 onto the output shaft.

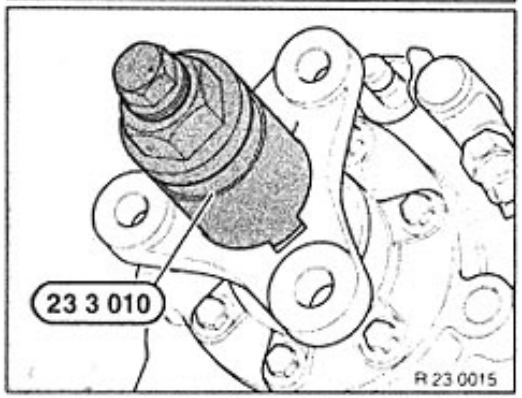

Coat taper shaft with oil.
Place output flange on spline and mount using special tool 23 3 010.
(Brace output flange with special tool 23 0 020).
Tightening torque 180 ... 200 Nm.

Remove special tool.

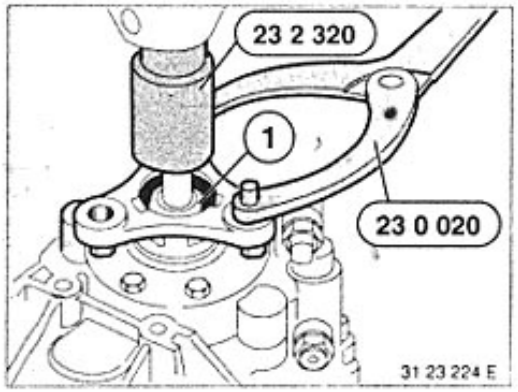

Screw on collar nut and press flange down once again.

Tightening torque 180 ... 200 Nm.

Remove collar nut once again.

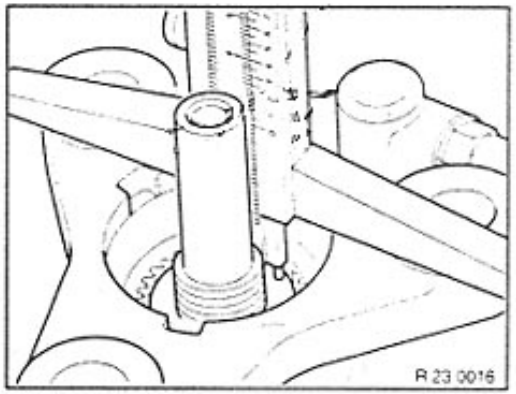

o Calculate thickness of shims (2 off).

Determine dimension "A" between face of flange and step on the output shaft.

Example: "A" = 26.6 mm

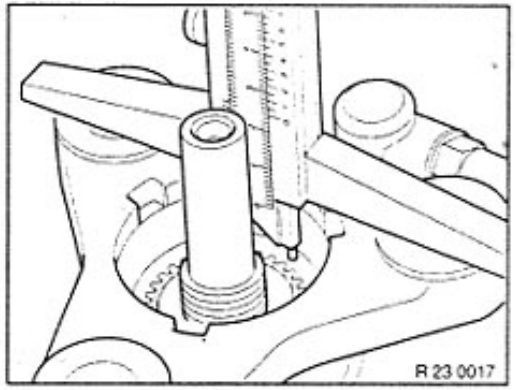

Determine dimension "B" between face of flange and locating face of collar nut.

Example: "B" = 24.1 mm

Example of calculation:

Transmission S6S 560 G

	A =	26.6 mm
minus	B =	24.1 mm
Difference	=	2.5 mm

Minus clearance 0.05 ... 0.14 mm

Total thickness of shim: 2.45 ... 2.36 mm

Transmission S6D 420 G

	A =	26.2 mm
minus	B =	22.7 mm
Difference	=	3.5 mm

Minus clearance 0.05 ... 0.22 mm

Total thickness of shim: 3.45 ... 3.28 mm

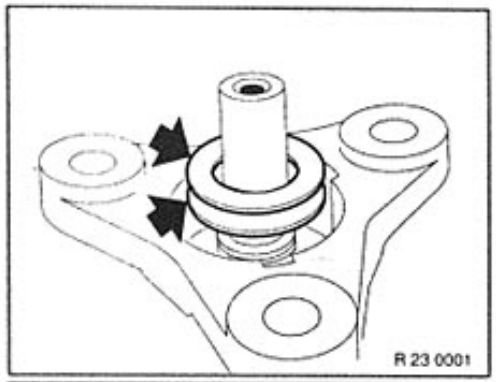

Example:

Transmission S6S 560 G:
Required thickness of shim = 2.4 mm
Thickness of shim 1.1 and 1.3 mm

Transmission S6D 420 G:
Required thickness of shim = 3.4 mm
Thickness of shim 2.0 and 1.4 mm

Insert shims.

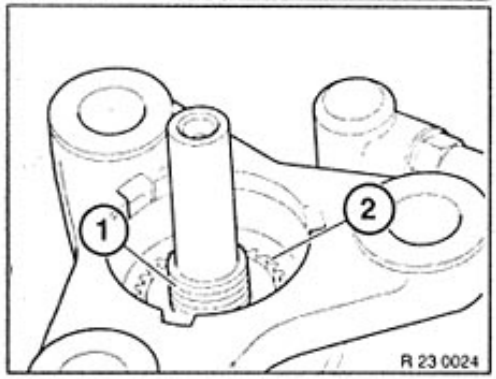

Coat thread (1) with Loctite 243 screw adhesive.

On transmission S6S 420G:
also coat locating face (2) with Loctite 518 for sealing purposes.

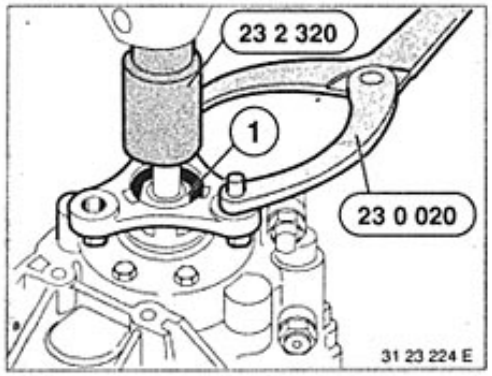

Brace output flange with special tool 23 0 020.
Use socket wrench insert 23 2 320 to tighten collar nut (1).

Tightening specification:

1. 190 Nm initial tightening torque
2. loosen
3. 120 Nm tightening torque

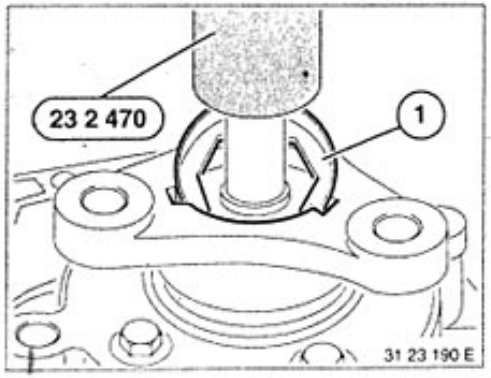

Drive in new tab washer (1) with special tool 23 2 470.

24 Automatic transmission

4 HP-24 / EH

Additional operations – see Construction Group Repair Instruction. Microfilm HG 24.

5 HP-30

24 00 006 ADJUSTING SELECTOR LEVER

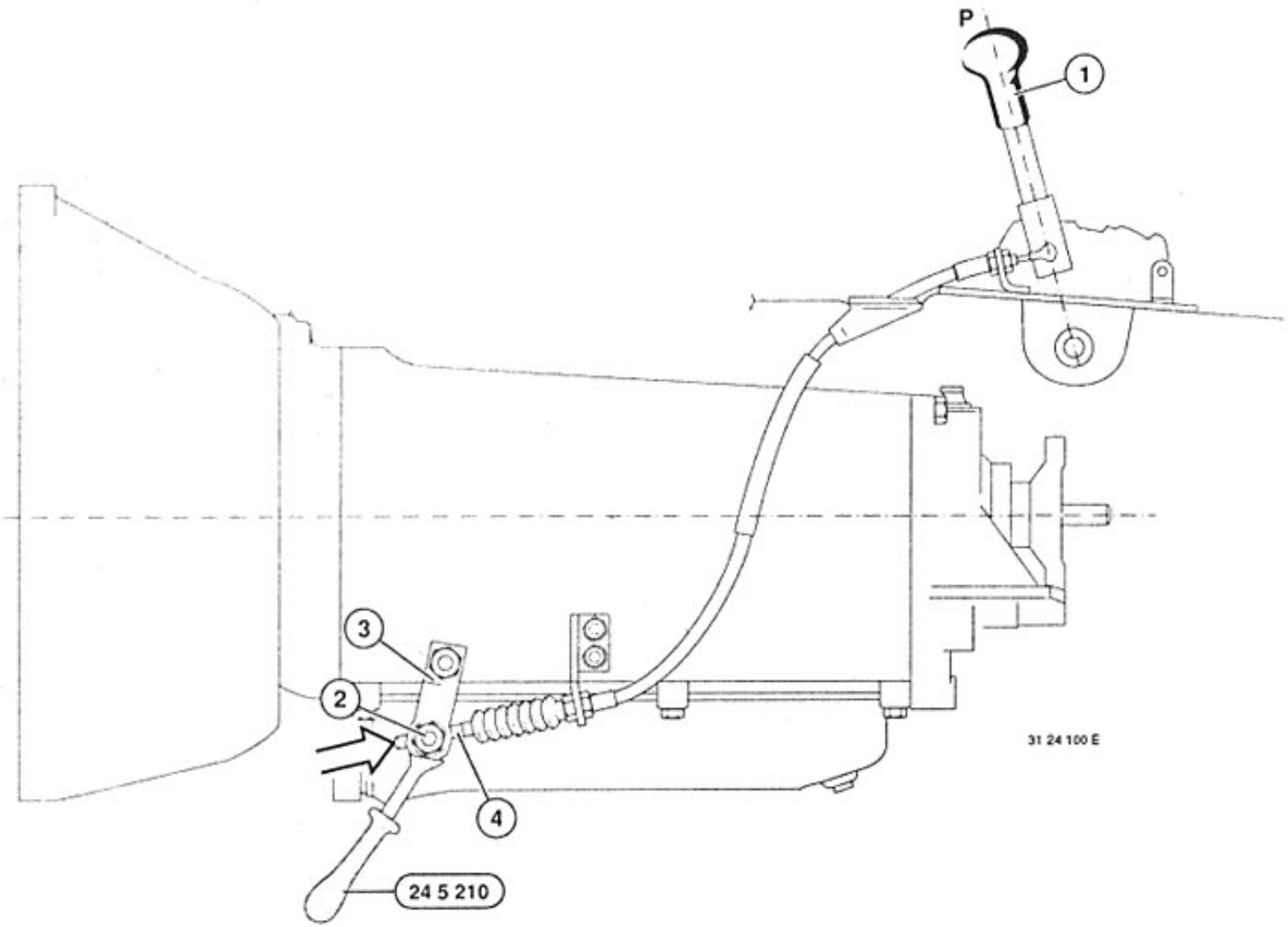

Move selector lever (1) to "P".
Loosen nut (2).
Important!
It is absolutely essential to counterhold on the clamping bolt with Special Tool 24 5 210 in order to avoid deformation of the cable.

Note:
Special Tool 24 5 210 can only be applied with the selector lever at "P".

Push lever (3) forward (park position).
Press cable rod (4) opposite forward direction.
Clamp cable rod (4) with nut (2) (counterhold with Special Tool 24 5 210).
Tightening torque = 10 ... 12 Nm.

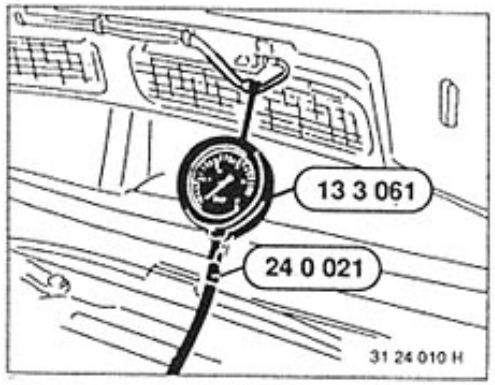

24 00 014 CHECKING HYDRAULIC PRESSURE VALUES

Connect hose 24 0 021 with pressure tester 13 3 061.

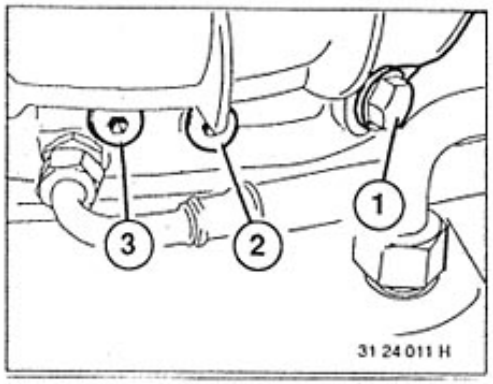

Remove concerned plugs for testing.
1 Pump pressure
2 Clutch A
3 Converter pressure

Installation:
Tightening torque*.

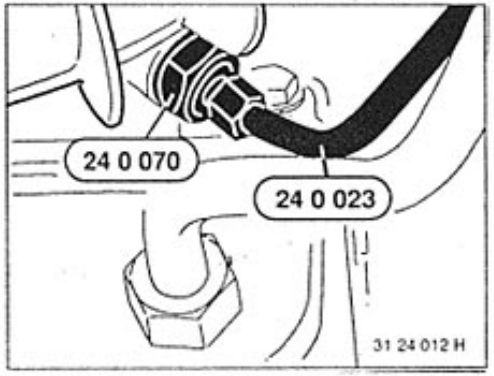

A) Pump Pressure:
Mount Special Tool 24 0 070 with seal on transmission.
Connect Special Tool 24 0 023 in conjunction with hose 24 0 021.

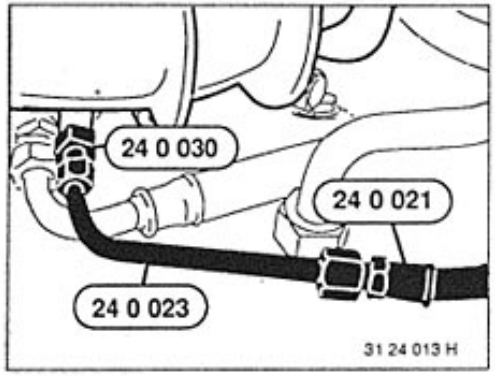

B) Converter Pressure:
Mount Special Tool 24 0 030 on the transmission.
Connect Special Tool 24 0 023 in conjunction with hose 24 0 021.

* See Specifications

Test:	Pos.	Gear	Speed (rpm)	Pressure in bar (psi)
Pump pressure	D	1st	700 ... 1000	6.0 ... 7.5 (85 ... 107)
	D	2nd/3rd/ 4th	approx. 4000	4.6 ... 5.8 (65 ... 82)
	R	R	700 ... 1000	11 ... 13 (156 ... 185)
Conv. pressure	D	4th	Converter locked	max. 0.7 (10)

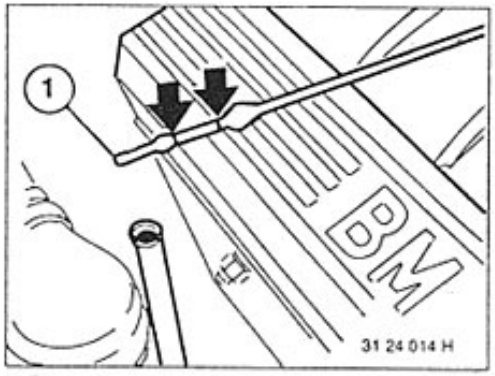

Check/correct oil level with selector lever at P, engine running at idle speed and car parked on level floor.
Oil level should not be below ball (1) after a test drive and an oil temperature of approx. 40° C (105° F).
Oil level should be between min. and max. marks at an oil temperature of approx. 80° C (175° F).
Amount of oil between min. and max. marks = approx. 0.3 ltr. (0.6 pint).
Never wipe off oil dipstick with a cloth losing lint.

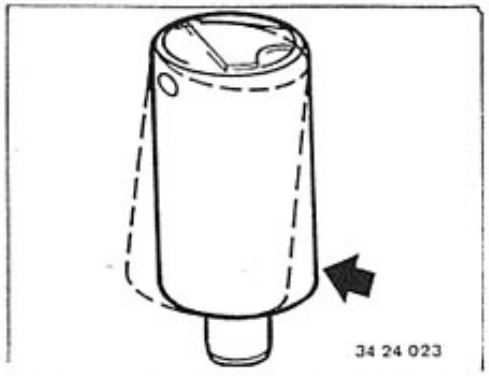

Important!
Oil Dipstick with Lock:
Oil dipstick can be pulled out only after tilting the grip.

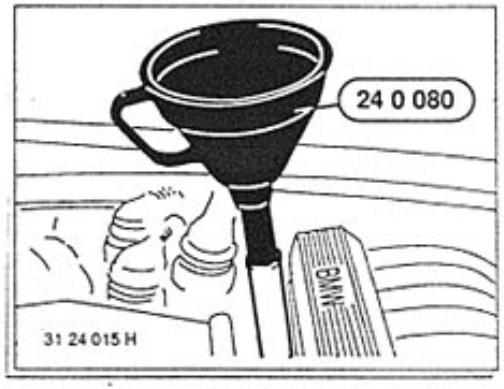

Important!
Oil Level Too High:
Strong foaming, splash loss, high temperature when driving fast, oil lost via.vent.

Oil Level Too Low:
Valves rattling, foaming, engine slipping when driving in curves, general operating disturbances.

Only pour in ATF with Special Tool 24 0 080 (funnel).

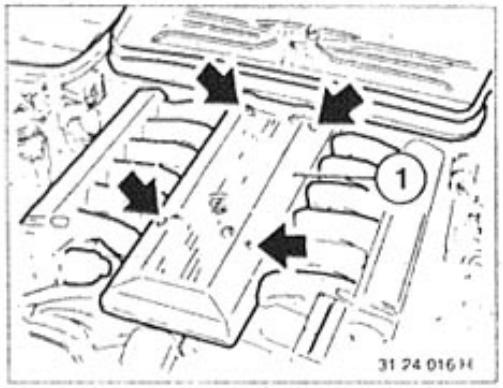

24 00 024 REMOVING AND INSTALLING TRANSMISSION

Disconnect ground lead.

Important!
Disconnection erases the fault memories of control units, so that they must first be read with a tester and faults printed if applicable.

Unscrew cover (1).

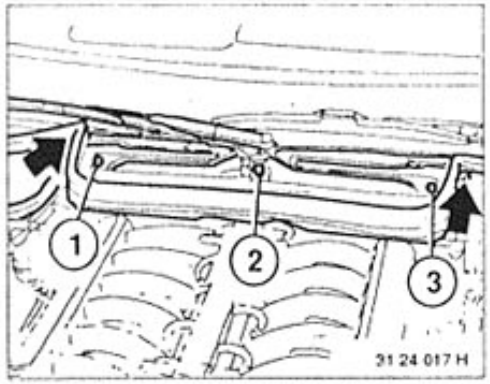

Pull off rubber seal partially.
Turn retainers (1 ... 3).
Unscrew left and right bolts.

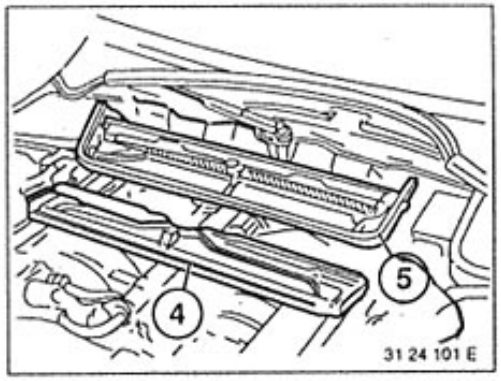

Lift out panel (4) and microfilter (5).

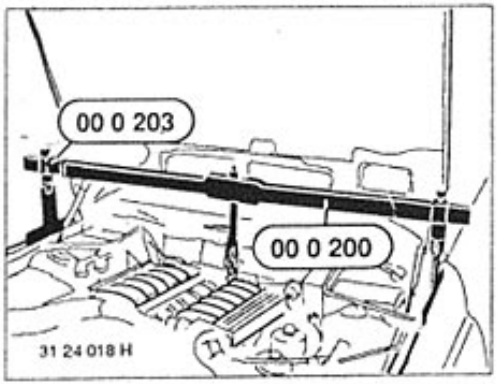

Important!
Support engine with Special Tool 00 0 200 before lowering the transmission to avoid damaging (danger of leaks) heater pipe connections on the engine compartment wall.
Set up Special Tool 00 0 200 in conjunction with 00 0 203 and attach on the rear eye.
Tension the chain.

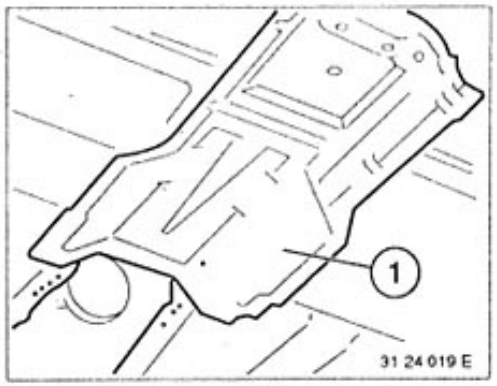

Remove exhaust assembly – see 18 00 020.
Remove heat shield (1).

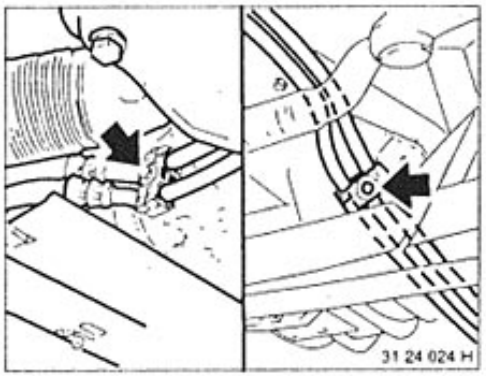

Unscrew mounting straps of oil cooler pipes on the engine.

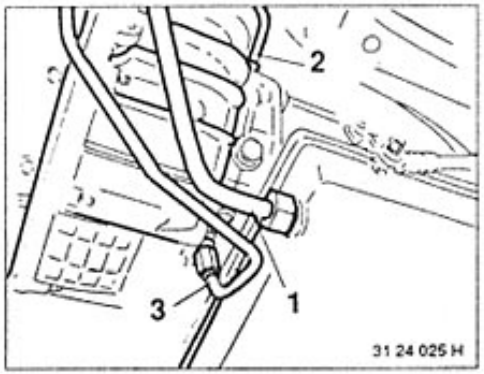

Drain oil.

Important!
Never reuse drained oil.

Installation:
Transmission will have to be disassembled if the oil smells burnt and is black.

Important!
Oil cooler and pipes must be cleaned with compressed air and flushed twice with ATF if the transmission was faulty.

Remove oil filler pipe (1).
Unscrew oil cooler pipes (2 and 3) on transmission.
Tightening torque*.

* See Specifications

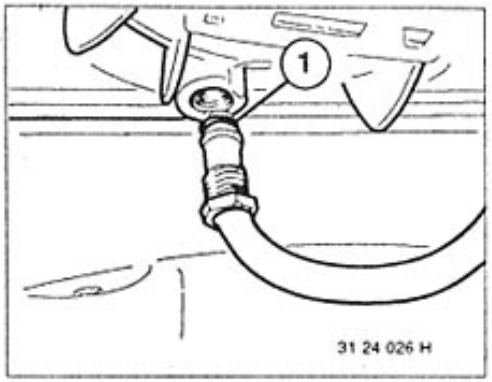

24 00 024 REMOVING AND INSTALLING TRANSMISSION

Disconnect ground lead.

Important!
Disconnection erases the fault memories of control units, so that they must first be read with a tester and faults printed if applicable.

Unscrew cover (1).

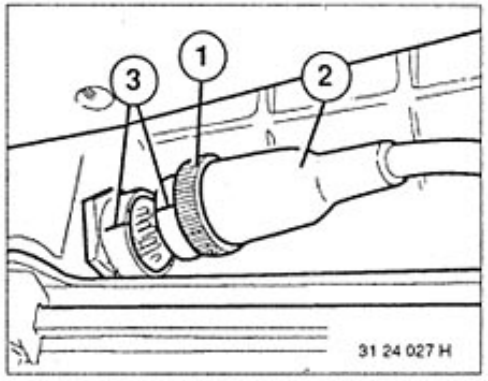

Pull off rubber seal partially.
Turn retainers (1 ... 3).
Unscrew left and right bolts.

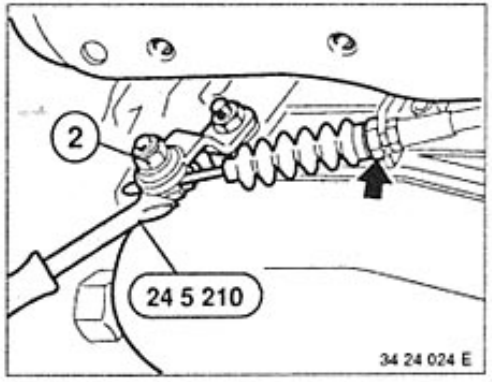

Lift out panel (4) and microfilter (5).

Important!
Support engine with Special Tool 00 0 200 before lowering the transmission to avoid damaging (danger of leaks) heater pipe connections on the engine compartment wall.
Set up Special Tool 00 0 200 in conjunction with 00 0 203 and attach on the rear eye.
Tension the chain.

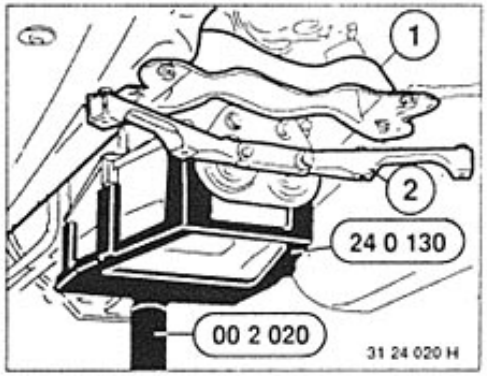

Remove complete exhaust assembly - refer to 18 00 020.
Remove heat shield (1).

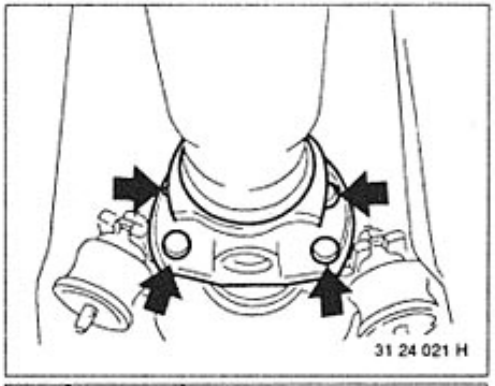

Loosen mounting straps of oil cooler pipes on the engine.

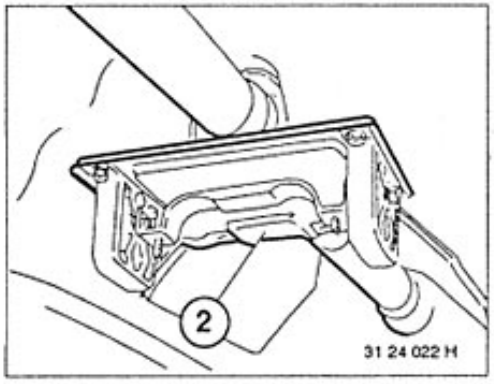

Drain ATF.

Important!
Never reuse drained ATF.

Installation:
The transmission will have to be disassembled if the ATF smells burnt and is black.

Important!
Oil cooler and pipes must be cleaned with compressed air and flushed twice with ATF if the transmission was faulty.

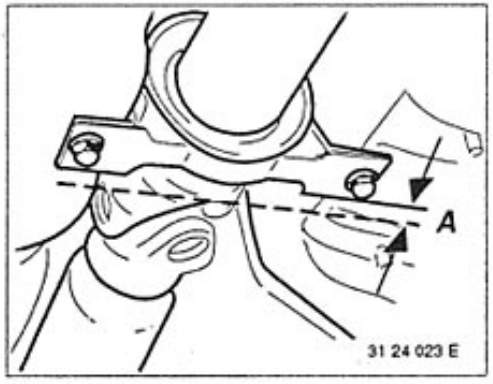

Remove oil filler pipe (1).
Unscrew oil cooler pipe (2 and 3) on transmission.

Installation:
Tightening torque*.

* Refer to Specifications

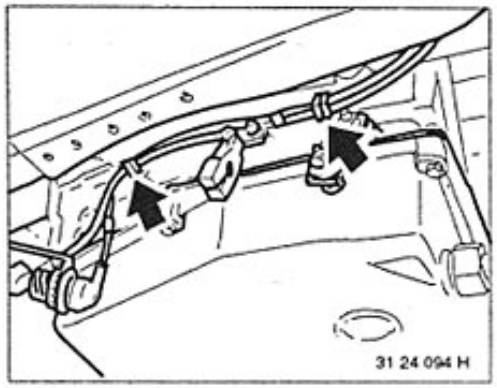

Installation:
Note O-rings (1).
Check condition of O-rings, replacing if necessary.

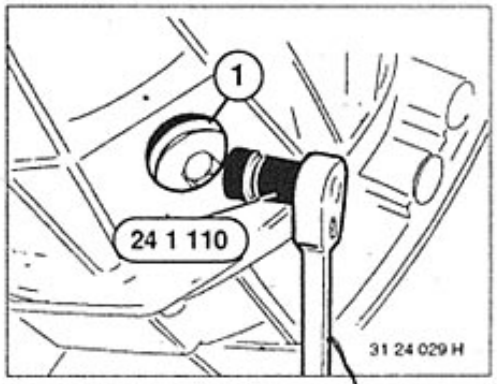

Turn bayonet fastener (1) anticlockwise.
Pull off plug (2).
Lift wire harness out of holder.

Installation:
Connect plug (2) that marking lines (3) are aligned.

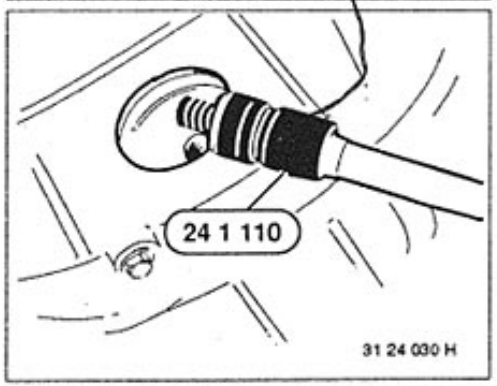

Unscrew nut (1).

Important!
It is absolutely essential to counterhold on the clamping bolt with Special Tool 24 5 210 in order to avoid deformation of the cable.

Note:
Special Tool 24 5 210 can only be applied with the selector lever at "P".

Disconnect cable at holder.
Pull out cable.

Installation:
Tightening torque*.
Adjust selector lever - refer to 24 00 008.

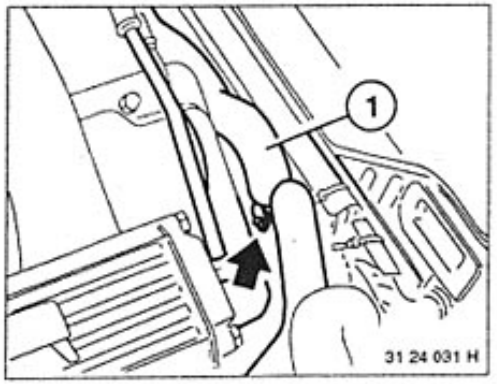

* Refer to Specifications

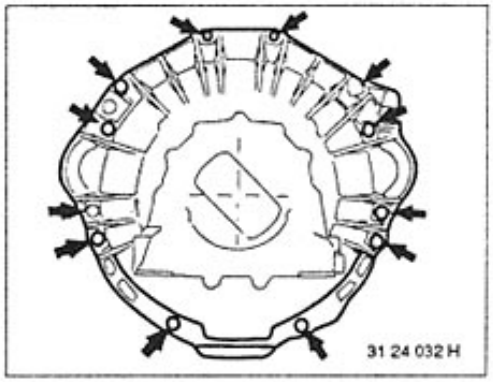

Support transmission with Special Tools 24 0 130 and 00 2 020.
Unscrew cross member (1) and exhaust suspension (2).
Lower the lifting fixture.

Installation:
Center transmission - refer to Group 26.
Tightening torque*.

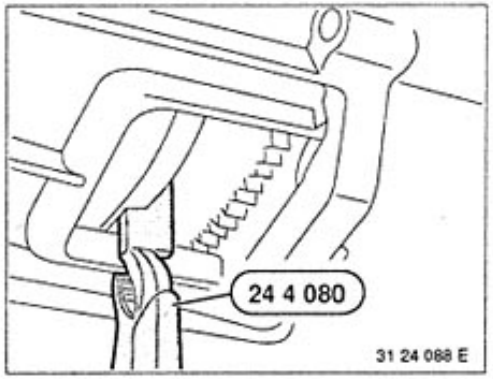

Unscrew propeller shaft at transmission.

Installation:
Tightening torque*.

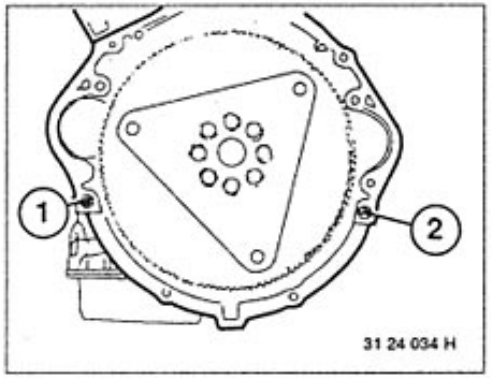

Unscrew exhaust holder (2).

Installation:
Tightening torque*.

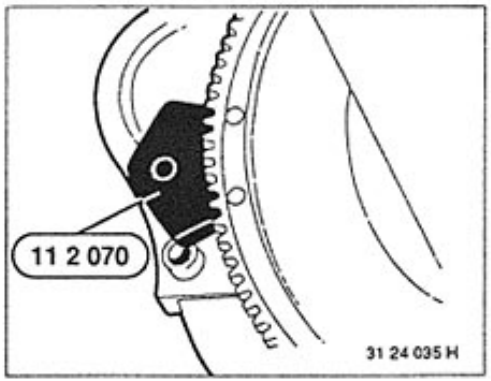

Unscrew center mount.

Installation:
Preload center mount forward by distance A = 2 ... 4 mm.

Important!
Don't let the propeller shaft fall into the joints – suspend it from car on a piece of wire.

Tightening torque*.

* Refer to Specifications

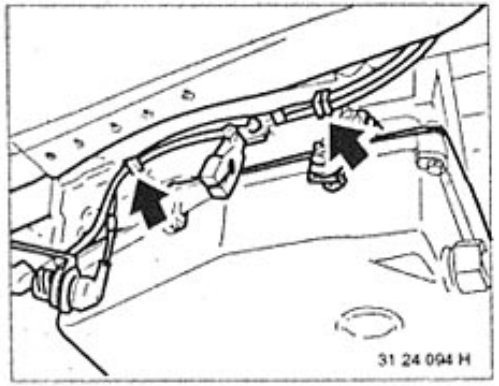

Take electric leads for oxygen sensors out of holders on transmission.

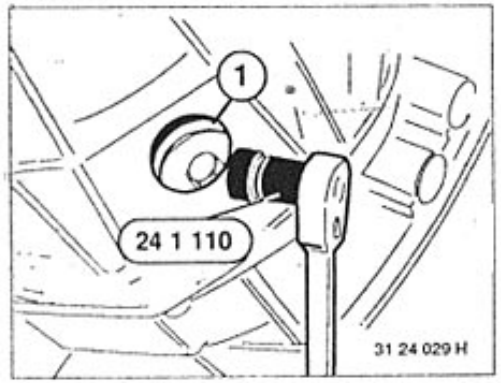

Lift cap off of opening (1) in the engine oil pan.
Unscrew torque converter from the drive plate at three points using Special Tool 24 1 110.
Turn the flywheel for this step.

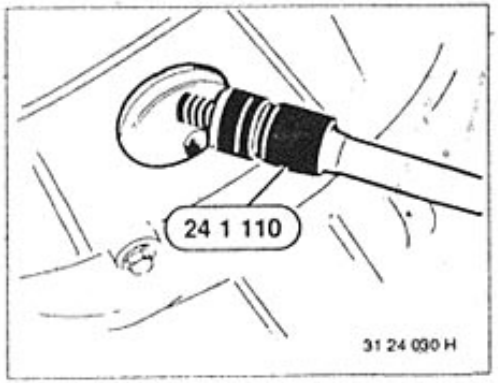

Installation:
Install bolt using Special Tool 24 1 110 and tighten using a torque wrench.
Tightening torque*.

Important!
Only use size M 10 x 16 mm bolts together with spring washers.
Non-conformance would lead to transmission damage.

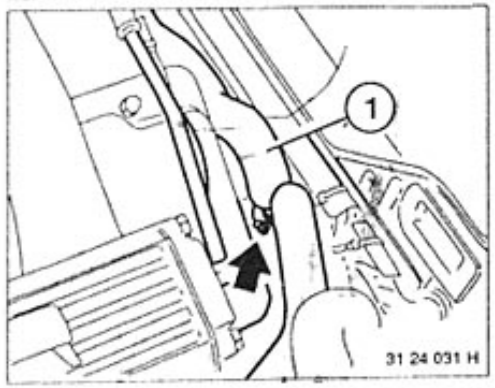

Lower the engine using the spindle of Special Tool 00 0 200 until there is a gap of approx. 1 mm between the engine and rear heater pipe connection (1) (check visually).

Refer to Specifications

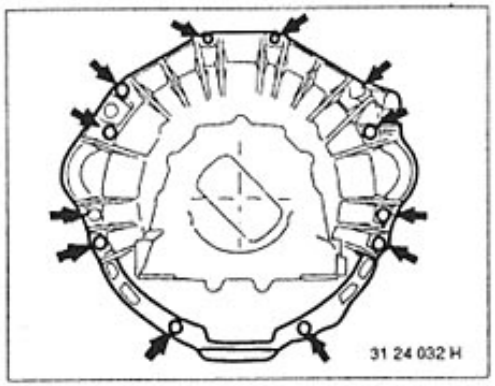

Unscrew Torx bolts using a Torx socket.
Use an approx. 100 cm long extension.

Important!
Washers must be used to avoid increasing the breaking-loose torque.
Tightening torque*.

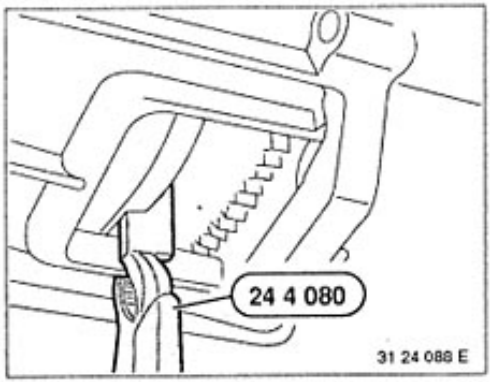

Apply Special Tool 00 2 020 on the transmission with help of Special Tool 24 0 130.
Prevent the torque converter from sliding out by mounting and clamping Special Tool 24 4 080 on the transmission case and torque converter.
Pull transmission off of engine.

Important!
The lifting fixture with mounted transmission may only be moved in completely lowered position.

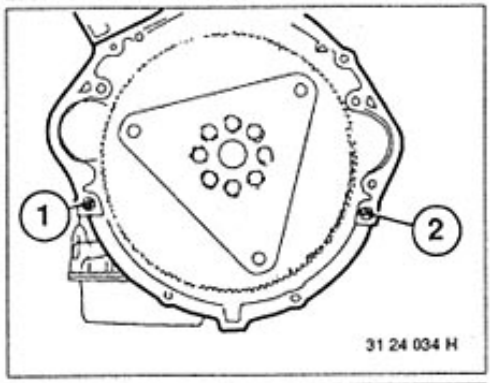

Important!
Make sure that guide sleeves (1 and 2) are not missing prior to attachment of the transmission.
As applicable, transfer guide sleeves from the old transmission or install new guide sleeves.

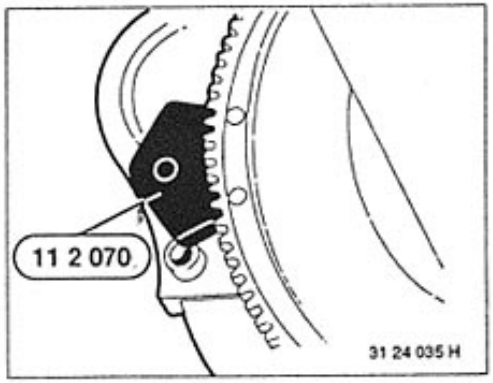

Installation:
Check drive plate for ruptures and cracks, replacing if necessary.
Hold flywheel tight using Special Tool 11 2 070.
Important!
Replace expansion bolts and install new bolts with bolt cement**.
Only coat threads.
Clean tapped bores thoroughly.
Tightening torque*.

* Refer to Specifications
** Source of Supply: BMW Parts

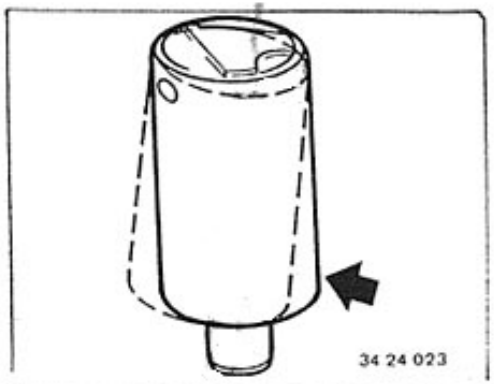

00 11 239 REPLACING AUTOMATIC TRANSMISSION FLUID

ATF should only be replaced at operating temperature.
Pull out oil dipstick.

Important!
Oil Dipstick with Lock:
Oil dipstick can be pulled out only after tilting the grip.

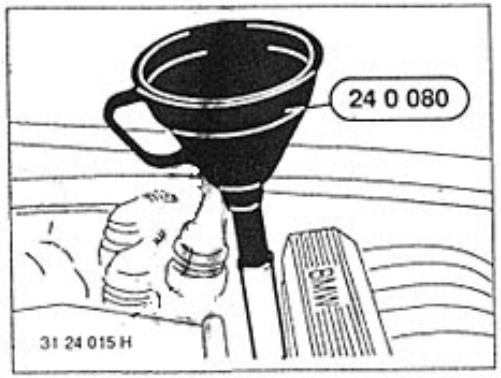

Unscrew drain plug.
Drain ATF.
Replace seal.
Screw in drain plug.
Tightening torque*.
Pour in ATF with help of Special Tool 24 0 080 (funnel).
Amount of ATF*.

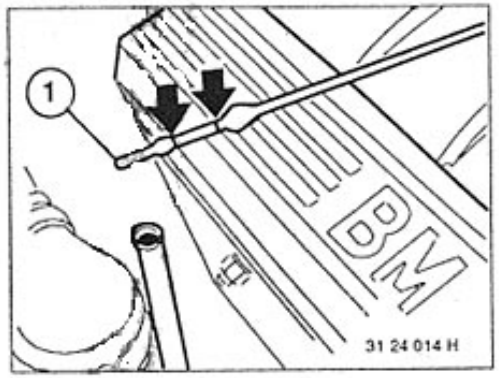

Check/correct oil level with selector lever at P, engine running at idle speed and car parked on level floor.
Oil level should not be below ball (1) after a test drive and at oil temperature of approx. 40° C (105° F).
Oil level should be between min. and max. marks at oil temperature of approx. 80° C (175° F).
Amount of oil between min. and max. marks = approx. 0.3 ltr. (0.6 pint).
Never wipe off the oil dipstick with a cloth losing lint.

Important!
Oil Level Too High:
Strong foaming, splash loss, high temperature while driving fast, oil lost via vent.

Oil Level Too Low:
Valves rattling, foaming, engine slips when driving in curves, general operating disturbances.

* See Specifications

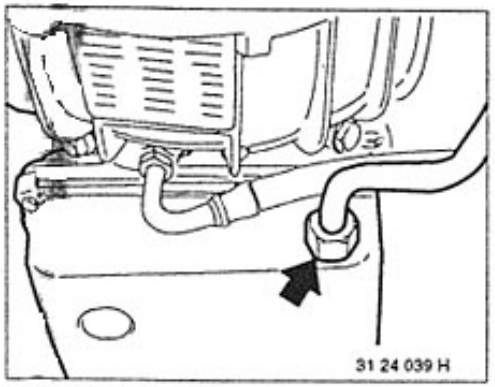

24 11 004 REMOVING AND INSTALLING OIL SUMP

Drain oil.
Important!
Never reuse drained oil.
Installation:
Transmission will have to be disassembled if the oil smells burnt and is black.

Unscrew oil filler pipe on oil sump.
Unscrew oil sump.

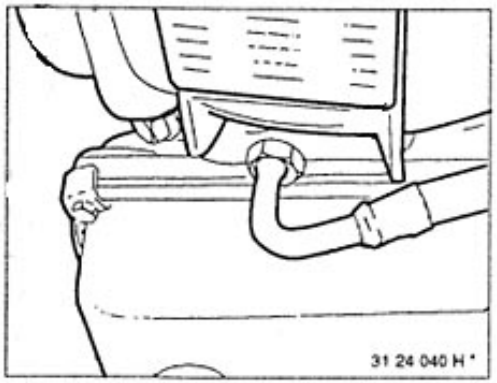

Installation:
Mount oil sump with brackets that the short legs press on the oil sump.
Tightening torque*.

Important!
The two brackets with straight legs must be mounted on the sides.

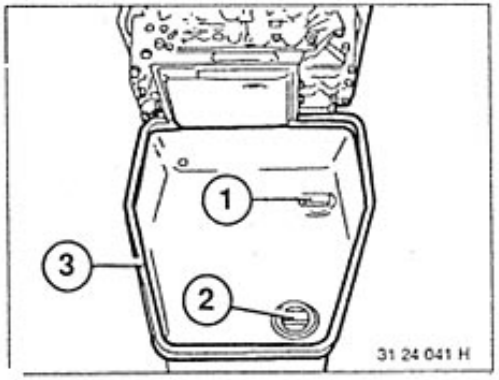

Clean oil sump.

Important!
Place magnets (1 and 2) in oil sump.
Install gasket (3).

* See Specifications

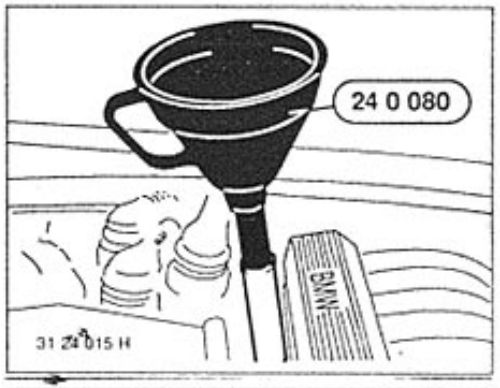

Pour in oil*.

Important!
Only pour in transmission oil with help of Special Tool 24 0 080 (funnel).

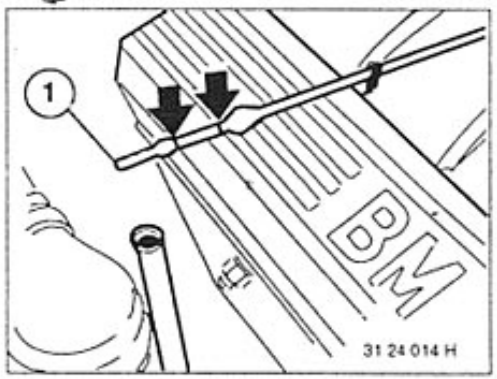

Check/correct oil level with selector lever at P, engine running at idle speed and car parked on level floor.
Oil level should not be below ball (1) after a test drive and with the oil temperature at approx. 40° C (105° F).
Oil level should be between min. and max. marks at oil temperature of approx. 80° C (175° F).
Amount of oil between min. and max. marks = 0.3 ltr. (0.6 pint).
Never wipe off the oil dipstick with a cloth losing lint.

Oil Level Too High:
Strong foaming, splash loss, high temperature when driving fast, oil lost via vent.

Oil Level Too Low:
Valves rattling, foaming, engine slipping, general operating disturbances.

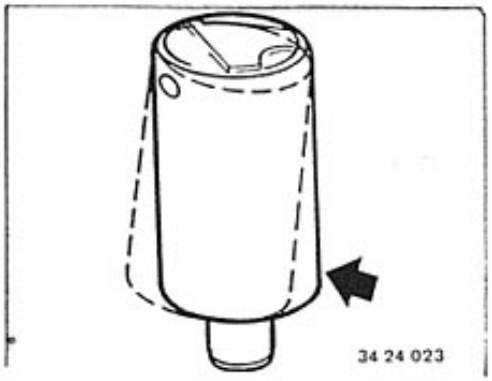

Important!
Oil Dipstick with Lock:
The oil dipstick can be pulled out only after tilting the grip.

* See Specifications

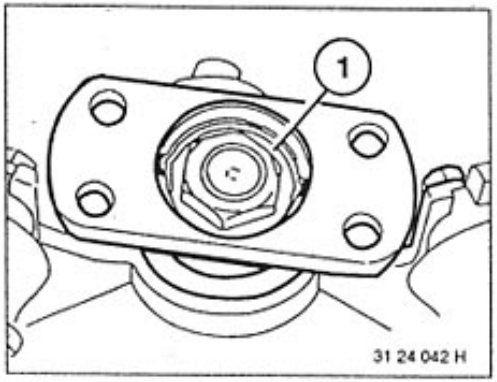

24 11 054 REMOVING AND INSTALLING OR SEALING TRANSMISSION EXTENSION

Unscrew propeller shaft – see 24 00 024.
Lift out lockplate (1).

Installation:
Replace lockplate.

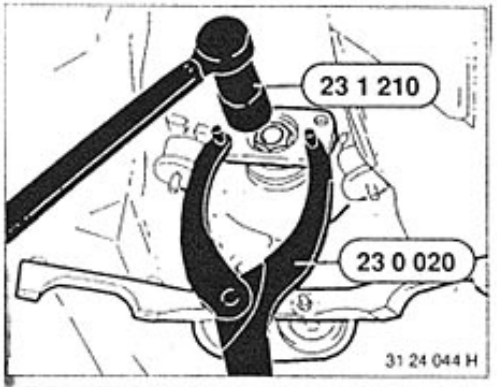

Hold output flange with Special Tool 23 0 020.
Unscrew collar nut with Special Tool 23 1 210.
Tightening torque*.
Pull off output flange.

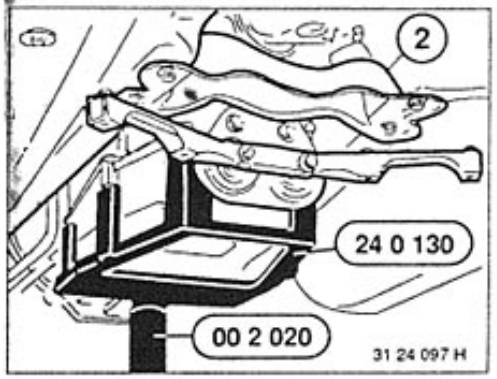

Support transmission with Special Tools 24 0 130 and 00 2 020.
Remove cross member (2).

Installation:
Center transmission – see Group 26.
Tightening torque*.

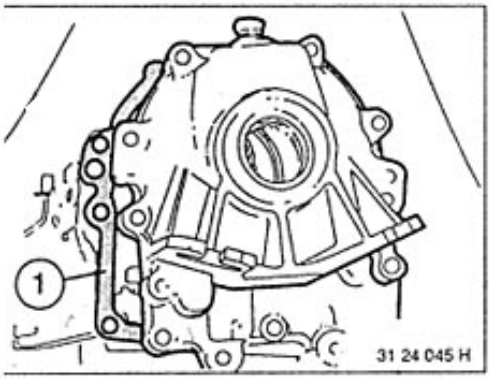

Unscrew transmission extension.

Installation:
Replace gasket (1).
Tightening torque*.

* See Specifications

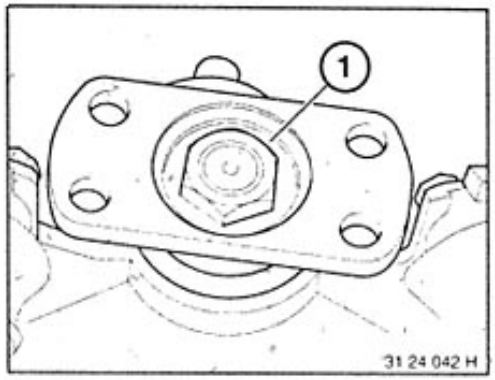

24 12 014 REPLACING RADIAL OIL SEAL FOR OUTPUT FLANGE

Unscrew propeller shaft – see 24 00 024.
Lift out lockplate (1).

Installation:
Replace lockplate.

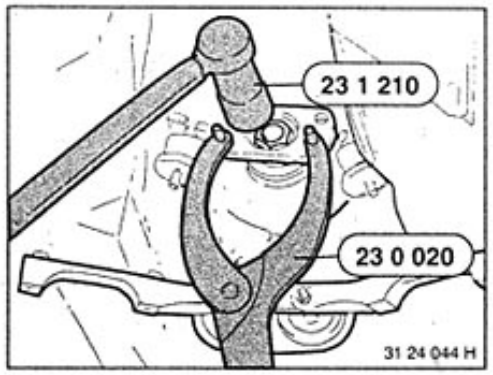

Hold output flange with Special Tool 23 0 020.
Unscrew collar nut with Special Tool 23 1 210.

Installation:
Tightening torque*

Pull off output flange.

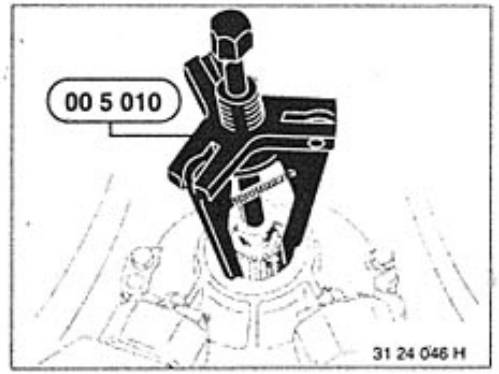

Pull out radial oil seal with Special Tool 00 5 010.

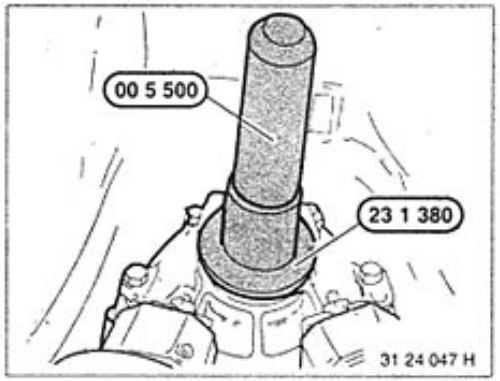

Lubricate sealing lip with ATF.
Drive in radial oil seal with Special Tools 23 1 380 and 00 5 500.

* See Specifications

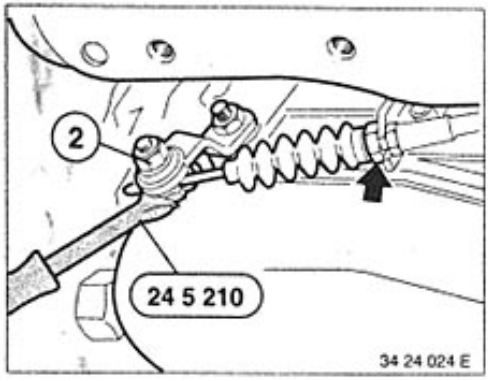

24 12 104 Replacing radial seal for manual shift valve shaft

Loosen nut (2).

Caution!
Always brace clamping screw with special tool 24 5 210 to avoid deformation of the cable.

Note:
Special tool 24 5 210 can only be applied in position P.
Unscrew cable from holder.
Pull out cable.

Installation:
Adjust shift mechanism 24 00 006.

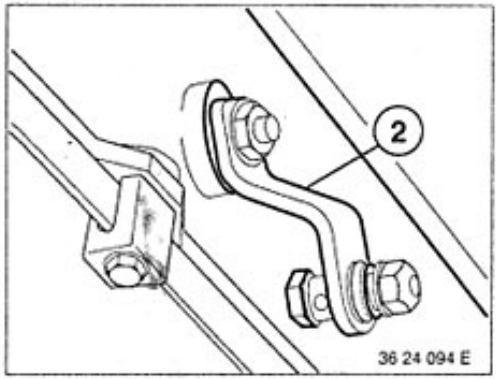

Remove lever (2).

Installation:
Tightening torque 24 51 1AZ*.

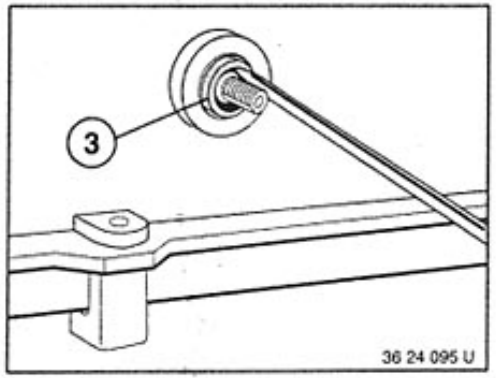

Lever out radial seal (3) using a narrow screwdriver.

Caution!
Do not damage the shaft.

* Refer to Technical Data

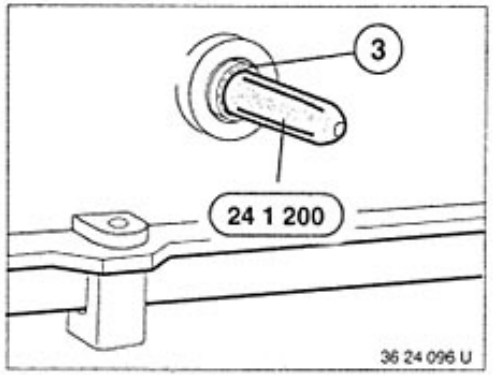

Attach special tool 24 1 200 to the selector shaft.

Lubricate sealing lip of radial oil seal with ATF.
Slide radial seal (3) up to housing.
Remove special tool 24 1 200.

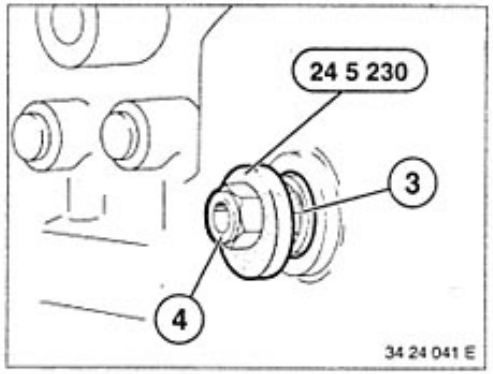

Fit special tool 24 5 230 to the manual shift valve shaft.
Turn nut (4) on the lever mount.
Press in radial seal (3) with the special tool 24 5 230 and the help of the nut (4).

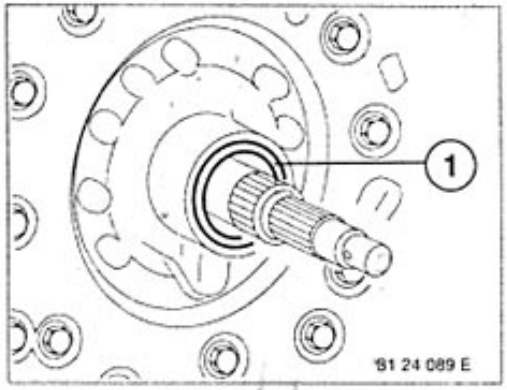

24 12 504 Replacing radial seal for torque converter
- transmission removed -

Remove and install torque converter, see 24 40 004.
Lift out radial seal (1).

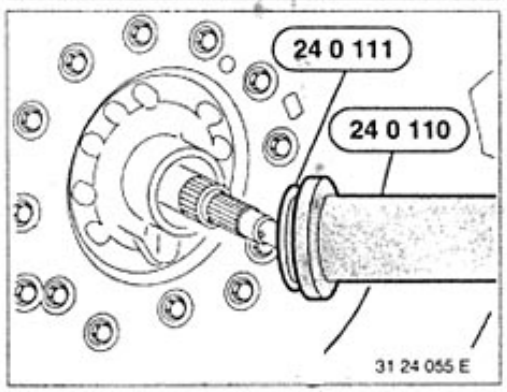

Lubricate sealing lip with ATF.
Drive radial seal into place with special tool 24 0 110 in conjunction with auxiliary ring 24 0 111 until it seats securely.
Press-in depth approx. 1 mm.

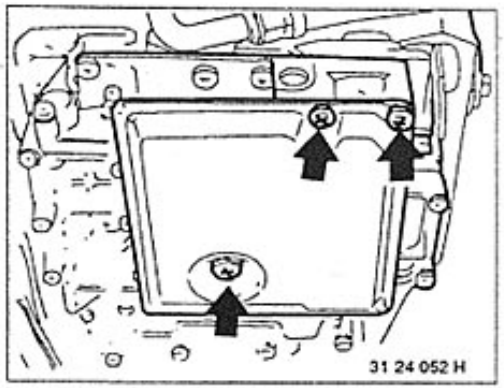

24 30 004 REMOVING AND INSTALLING VALVE BODY

Remove oil sump – see 24 11 004.
Unscrew oil filter screen.

Installation:
Check that length of bolts is 65 mm.
Tightening torque*.

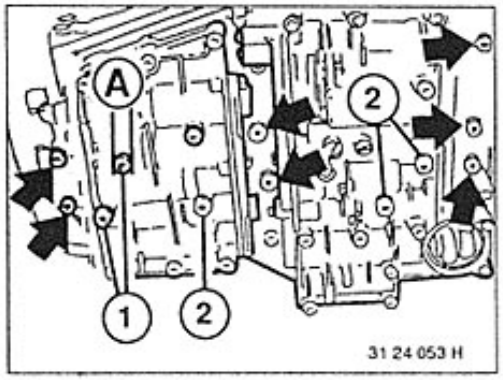

Remove valve body.
Unscrew Torx bolts with Special Tool 00 2 100.

Important!
Only unscrew bolts with head size A = 12 mm (0.472").

Installation:
Length of bolts is different.
Bolts (1) are 65 mm long.
Bolts (2) are 60 mm long.

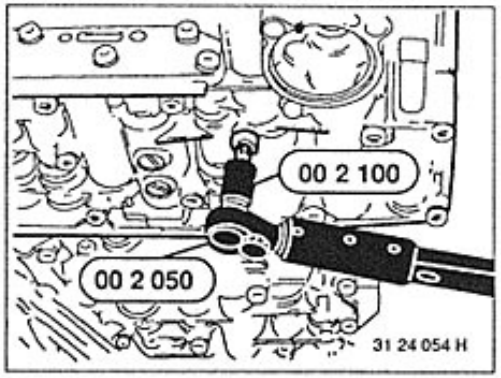

Installation:
Tighten Torx bolts with Special Tools 00 2 100 and 00 2 050.
Tightening torque*.

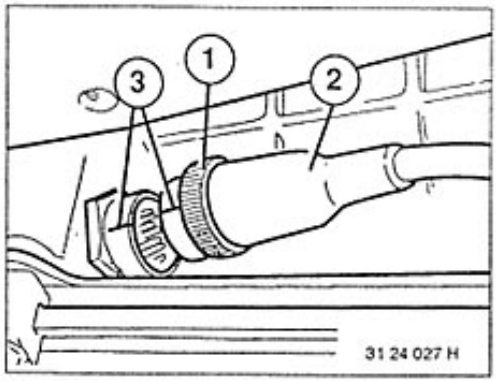

Turn bayonet retainer (1) anticlockwise.
Pull off plug (2).
Unscrew nut.

Installation:
Connect plug (2) that marking lines (3) are aligned.

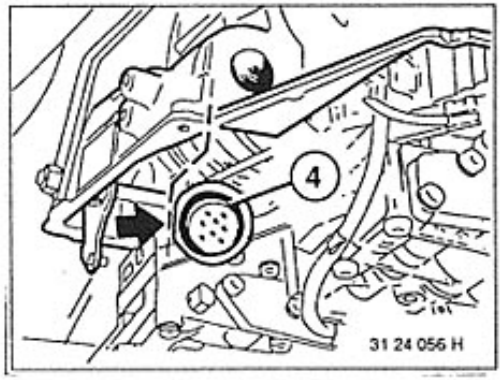

Pull out socket toward inside.

Installation:
Check O-ring (4), replacing if necessary.
Insert socket that its flat side faces out toward the housing.
Tightening torque*.

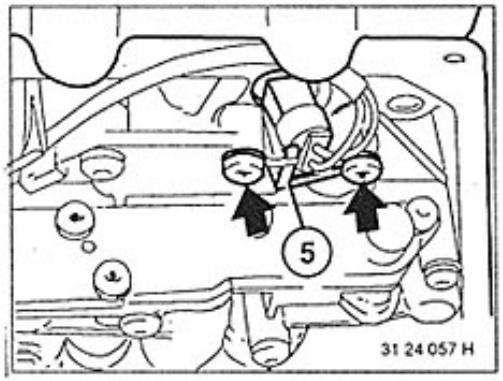

Note:
Also mount pulse sender on the valve body.
Have tabs of holder (5) engage in the grooves on the plug.

* See Specifications

* See Specifications

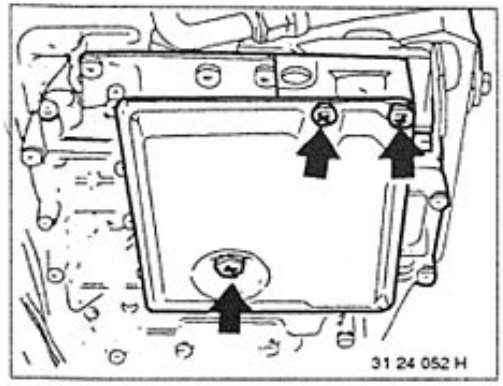

24 31 154 REMOVING AND INSTALLING OR REPLACING TRANSMISSION OIL FILTER SCREEN

Remove oil sump – see 24 11 004.
Unscrew oil filter screen.

Installation:
Clean oil filter screen.
Replace an oil filter screen which is starting to gum up with a burnt brown residue.
Check that length of bolts is 65 mm.
Tightening torque*.

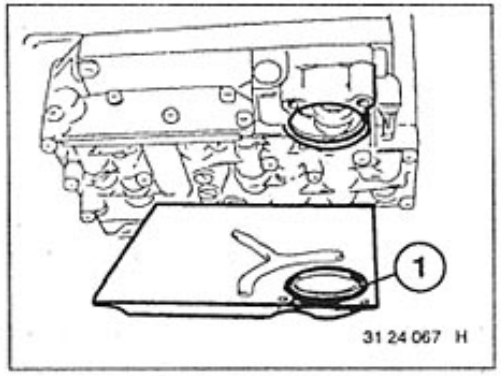

Check rubber ring (1), replacing if necessary.

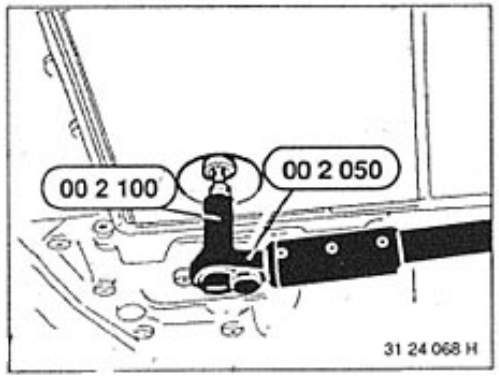

Installation:
Tighten Torx bolts with Special Tools 00 2 100 and 00 2 050.
Tightening torque*.

* See Specifications

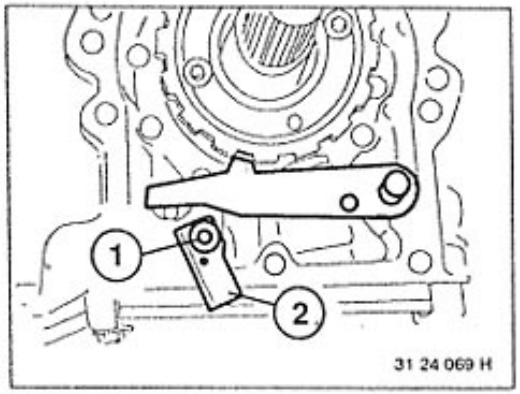

24 34 004 REMOVING AND INSTALLING OR REPLACING PARKING LOCK (PAWL / SPRING)

Unscrew transmission extension – see 24 11 054.
Loosen bolt (1).
Swing holder (2) down.

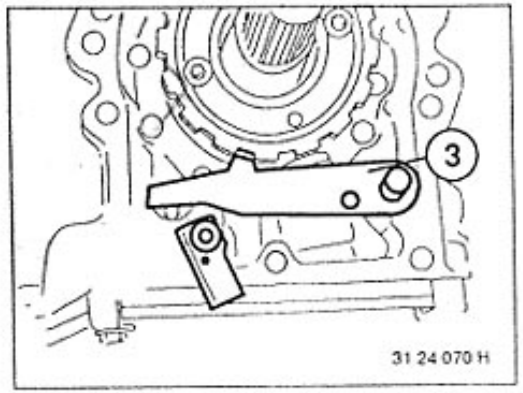

Pull off pawl (3).

Caution!
Spring force.

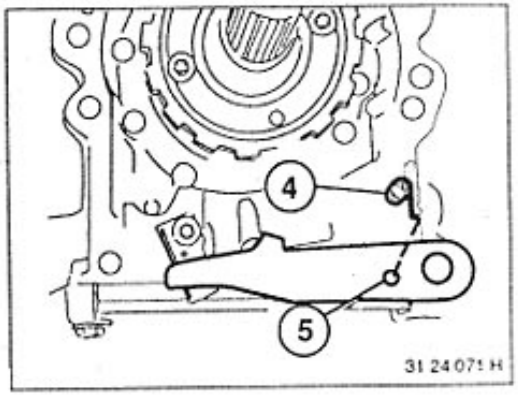

Installation:
Check installed position of spring (4).
End of spring (4) must be attached on bore (5) on the pawl.

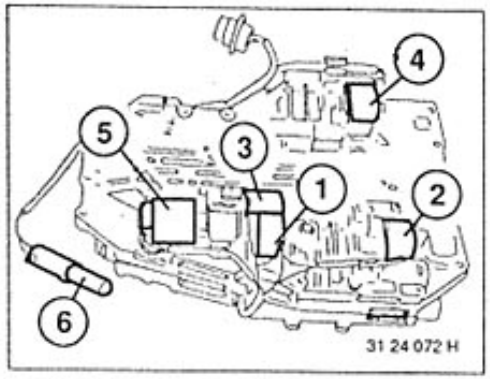

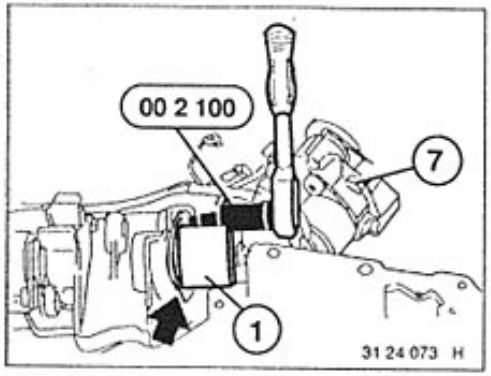

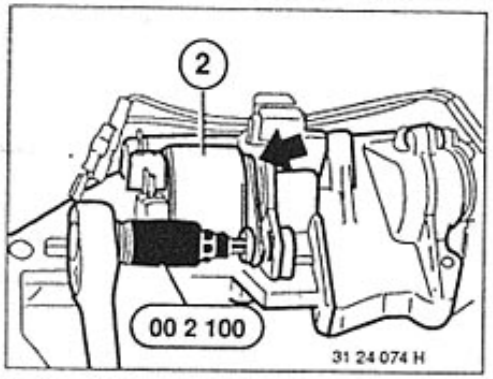

24 34 851 REPLACING ALL SOLENOID VALVES
– Valve Body Removed –

Arrangement:
1 Solenoid - 1st/2nd + 3rd/4th gears
2 Solenoid - 2nd/3rd gears
3 Solenoid - converter lockup clutch
4 Solenoid - reverse gear lock
5 Pressure regulator
6 Pulse sender

a) Solenoid (1) - 1st/2nd + 3rd/4th Gears
Unscrew governor housing (7).
Pull off wire plug.
Unscrew Torx bolt with Special Tool 00 2 100.
Take off holder.
Pull out solenoid valve.

Installation:
Install holder with tabs facing collar on solenoid valve.
Plug jacks must have sufficient spacing to the housing or arrow on housing must be between plug jacks.
Tightening torque*.

b) Solenoid (2) - 2nd/3rd Gears
Pull off wire plug.
Unscrew Torx bolt with Special Tool 00 2 100.
Take off holder.
Pull out solenoid valve.

Installation:
Install holder with tabs facing collar on solenoid valve.
Plug jacks must have sufficient spacing to the housing or arrow on housing must be between plug jacks.
Tightening torque*.

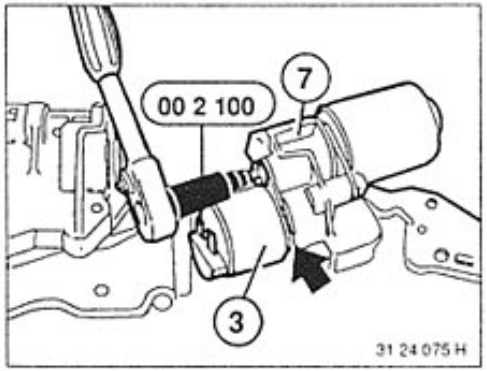

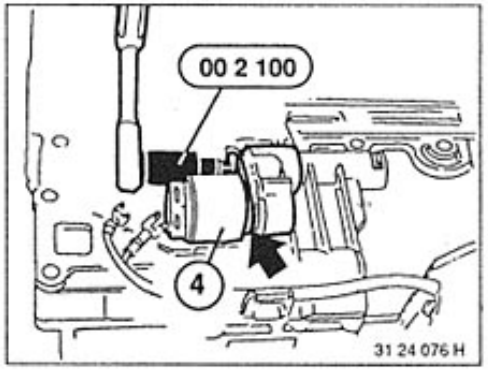

c) Solenoid (3) - Conv. Lockup Clutch
Unscrew governor housing (7).
Pull off wire plug.
Unscrew Torx bolt with Special Tool 00 2 100.
Take off holder.
Pull out solenoid valve.

Installation:
Install holder with tabs facing collar on solenoid valve.
Plug jacks must have sufficient spacing to the housing or arrow on housing must be between plug jacks.
Tightening torque*.

d) Solenoid (4) - Reverse Gear Lock
Pull off wire plug.
Unscrew Torx bolt with Special Tool 00 2 100.
Take off holder.
Pull out solenoid valve.

Installation:
Install holder with tabs facing collar on solenoid valve.
Plug jacks must have sufficient spacing to the housing or arrow on housing must be between plug jacks.
Tightening torque*.

* See Specifications

* See Specifications

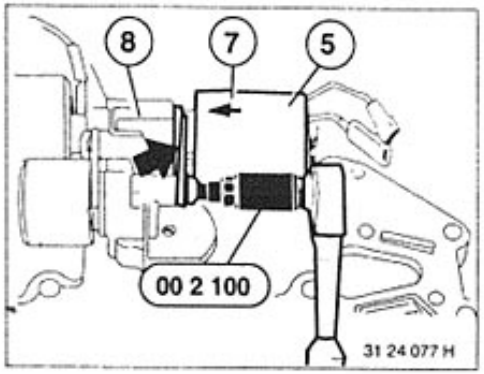

24 34 860 REPLACING PRESSURE REGULATOR
– Valve Body Removed –

Pull off wire plug.
Unscrew Torx bolt with Special Tool 00 2 100.
Take off holder.
Pull out pressure regulator (5).

Installation:
Arrow (7) on pressure regulator must be aligned with rib (8).
Install holder with tabs facing collar on pressure regulator.
Tightening torque*.

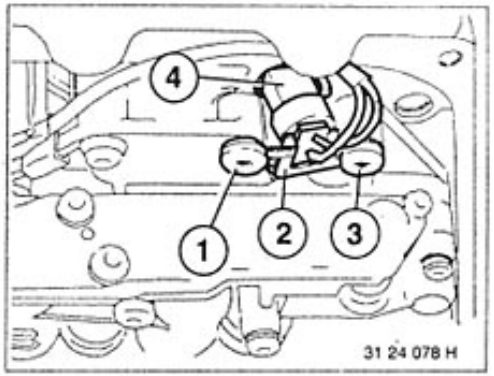

24 34 870 REPLACING OUTPUT SPEED PULSE SENDER
– Oil Sump Removed –

Unscrew Torx bolts (1 and 3) with Special Tool 00 2 100.
Take off holder (2).

Installation:
Have tabs of holder (2) engage in grooves of plug (4).

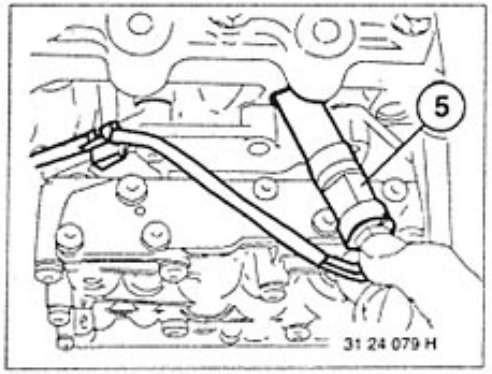

Pull out pulse sender.
Pull off plug (5).

Installation:
Tightening torque*.

* See Specifications

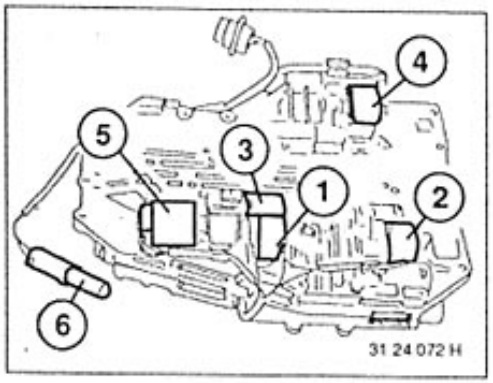

24 35 500 REPLACING WIRE HARNESS IN AUTOMATIC TRANSMISSION

Remove valve body – see 24 30 002.
Pull off wire harness plugs on solenoids (1 ... 4), pressure regulator (5) and pulse sender (6).
Lift wire harness out of holders.

Installation:
Check colors of wires.
Solenoid (1) – gray / violet
Solenoid (2) – green / violet
Solenoid (3) – red /violet
Solenoid (4) – orange / violet
Pressure regulator (5) – blue / violet
Pulse sender (6) – brown / brown
Push on plugs against the stop and check for tight fit.

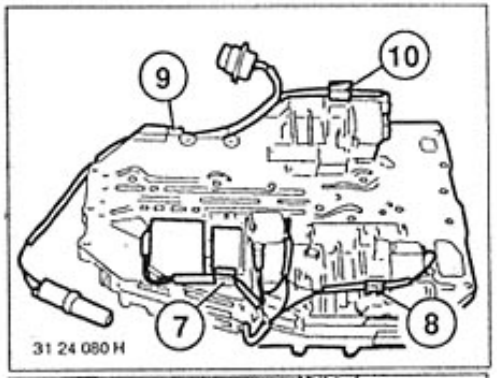

Route wire harness and clamp in holders (7 ... 10).

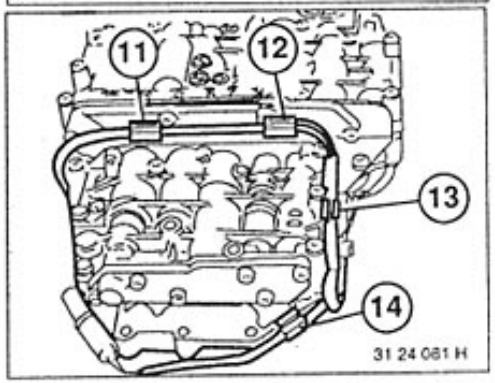

Turn valve body around.
Route wire harness and clamp in holders (11 ... 14).

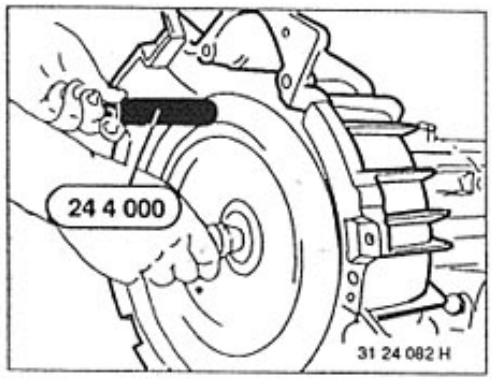

24 40 004 REMOVING AND INSTALLING TORQUE CONVERTER

Remove transmission – see 24 00 024.
Pull torque converter out of primary pump carefully with Special Tool 24 4 000.

Caution!
Escaping oil.

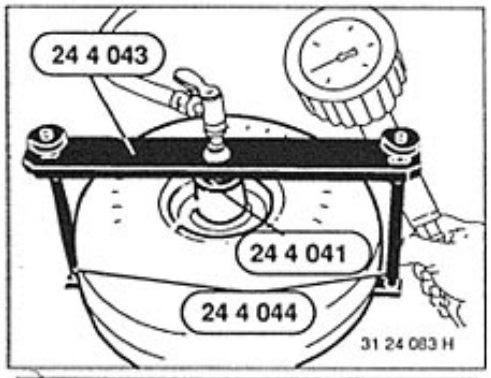

Installation:
Check torque converter for leaks with Special Tools 24 4 041, 24 4 043 and 24 4 044.
Test pressure: 0.5 bar (7 psi).

Caution!
Always use Special Tool 24 4 043 to prevent injury.

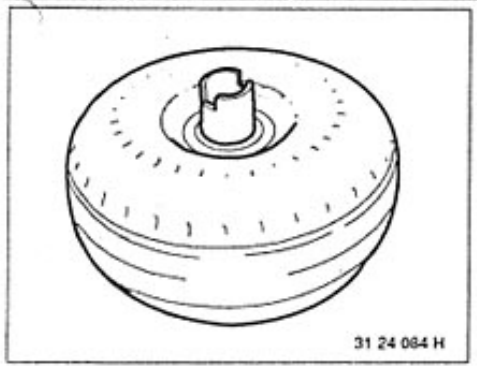

Torque converter must be replaced when bearing surface on converter shaft is damaged.

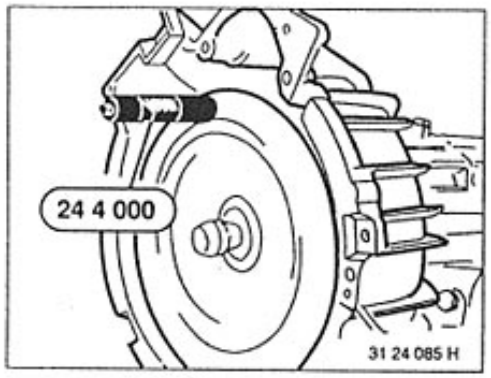

Turn slightly to guide openings on converter into primary pump carefully, using Special Tool 24 4 000.

Important!
Be careful not to damage converter bearings and seal while guiding in.
Converter is in its correct installed position, if drive ring is below the case edge.

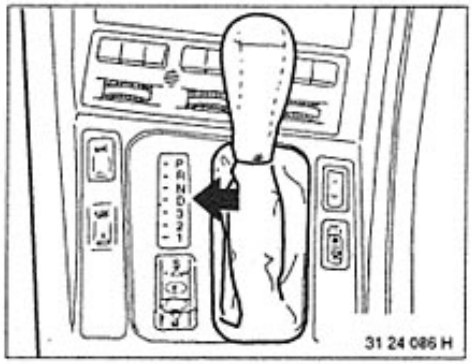

Checking Installed Torque Converter:
Engine and transmission oil must have operating temperature.
Engine must produce full rated power.
Start engine.
Pull on parking brake and operate brake pedal firmly.
Move selector lever to D and press accelerator pedal to full throttle.
Read stall speed* from tachometer.

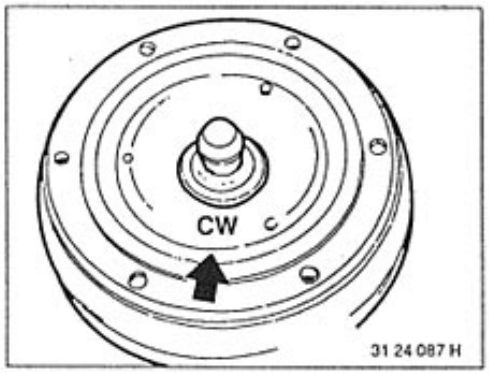

Important!
Never test stall speed longer than 10 seconds to prevent damage from excessive heat.

Stall Speed Much Above Specified Value*:
a) Converter oil volume insufficient – correct the oil level.
b) Slip in clutches – check clutches.

Stall Speed Much Below Specified Value*:
a) Engine power insufficient – check engine.
b) Converter or pump faulty – replace converter or check pump.

Torque converters cannot be cleaned with conventional workshop equipment and must be replaced when a transmission had been faulty or an oil filter screen was worn.
Converter identification*.

* See Specifications

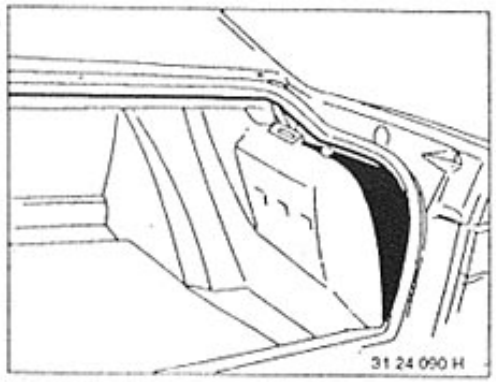

24 61 500 REMOVING AND INSTALLING OR REPLACING CONTROL UNIT (EH)

Control unit is located in trunk at rear right.
Lift out cover.

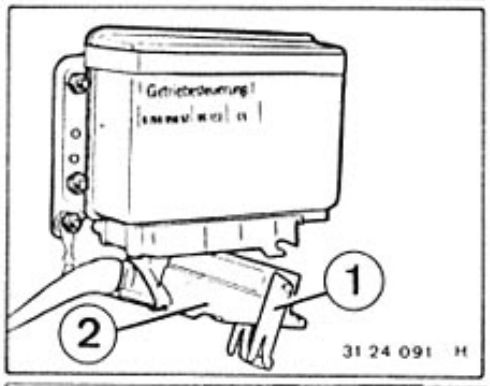

Swing down spring-loaded reatiner (1).
Pull out plug (2) forward.

Installation:
Spring-loaded retainer (1) must be engaged.

Note:
Plug (2) may only be disconnected or connected after switching off the ignition.

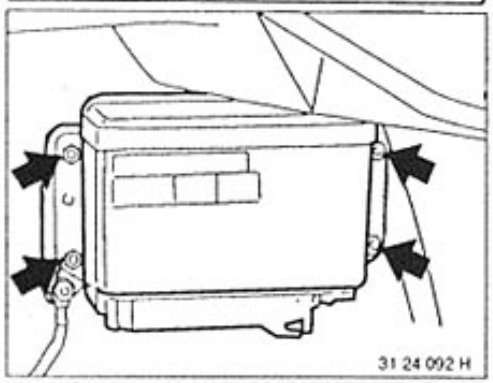

Unscrew control unit on holder.

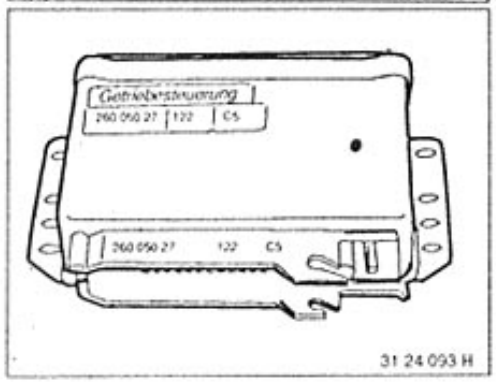

Check code* on data plate.
See Parts Catalog for cross reference of types and models.

* See Parts Catalog

TROUBLESHOOTING AUTOMATIC TRANSMISSION 4 HP 24 / EH

Condition	Cause	Correction
Position P		
Park will not engage	a) Selector linkage between selector lever and transmission maladjusted.	a) Adjust selector lever – see 24 00 006.
	b) Excessive friction in parking lock mechanism.	b) Replace parking lock parts (connecting rod, pawl) – see 24 34 004.
Park does not hold (slips out)	a) Selector linkage between selector lever and transmission maladjusted.	a) Adjust selector lever – see 24 00 006.
Engine cannot be started in N or P, or can be started in all positions	a) Selector linkage between selector lever and transmission maladjusted.	a) Adjust selector lever – see 24 00 006.
	b) Transmission switch faulty. Starter interlocking relay or supply lead faulty.	b) Replace transmission switch – see 25 16 080. Replace / repair switch or supply lead.
Position R	a) Selector linkage between selector lever and transmission maladjusted.	a) Adjust selector lever – see 24 00 006.
No reverse gear	b) Oil filter screen dirty.	b) Replace oil filter screen; exchange transmission if bits of liners are in oil sump.
	c) Clutch B destroyed. Then also no 3rd gear.	c) Disassemble clutches – see 24 23 022.
	d) Clutch D destroyed. Then also no engine braking in position 1, 1st gear.	d) Disassemble clutches – see 24 23 022.
	e) Clutch E destroyed. Then also no engine braking in 2nd + 3rd gears as well as in pos. 1, 1st gear.	e) Disassemble clutches – see 24 23 022.
Slipping or shaking when moving off	a) Clutch B or E or brake D damaged.	a) Disassemble clutches – see 24 23 022.
Hard engaging jolt P–R or N–R or definite double knock in P–R or N–R shift (engine speed < 1500 rpm).	a) Damper B faulty. Then shift 2–3 also incorrect.	a) Exchange valve body – see 24 30 004. Check transmission electronics.
Backup lights do not light up (electrical system okay).	a) Transmission switch faulty.	a) Replace transmission switch – see 25 16 080.
Car moves or creeps	a) Selector linkage between selector lever and transmission maladjusted.	a) Adjust selector lever – see 24 00 006.
	b) Clutch A faulty (bonded).	b) Replace clutch A – see 24 23 022.

Condition	Cause	Correction
Position D No power flow	a) Oil filter screen dirty.	a) Replace oil filter screen – see 24 31 154; replace transmission if bits of liners are in oil sump.
	b) Clutch A faulty.	b) Replace clutch A – see 24 23 022.
	c) 1st gear one-way clutch slips.	c) Disassemble transmission – see 24 00 082.
	d) Selector linkage between selector lever and transmission maladjusted.	d) Adjust selector lever – see 24 00 006.
Slipping or shaking when moving off.	a) Clutch A damaged.	a) Replace clutch A – see 24 23 022.
Hard engaging jolt N–D (engine speed > 1500 rpm).	a) Clutch A damaged.	a) Replace clutch A – see 24 23 022.
	b) Damper A faulty.	b) Replace valve body – see 24 30 004.
No shift (warm or cold state)		
— Shift 1–2 / 2–1	a) Kickdown switch faulty (only kickdown shifts).	a) Replace kickdown switch – see 35 41 480.
	b) Transmission electronics faulty.	b) Check transmission electronics.
	c) Solenoid valve (1) faulty.	c) Replace solenoid valve – see 24 34 851.
	d) Control valve 1-2 / 3-4 seized.	d) Replace valve body – see 24 30 004.
	e) Shift valve 1-2 seized.	e) Replace valve body – see 24 30 004.
— Shift 1–2	a) Brakes C' and/or C faulty.	a) Disassemble clutches – see 24 23 022.
— Shift 2–3 / 3–2	a) Solenoid valve (2) faulty.	a) Replace solenoid valve – see 24 34 851.
	b) Shift valve 2-3 seized.	b) Replace valve body – see 24 30 004.
— Shift 2–3	a) Clutch B faulty.	a) Replace clutch B – see 24 23 022.
— Shift 3–4 / 4–3	a) Solenoid valve (1) faulty.	a) Replace solenoid valve – see 24 34 851.
	b) Control valve 1-2 / 3-4 seized.	b) Replace valve body – see 24 30 004.
	c) Shift valve 3-4 seized.	c) Replace valve body – see 24 30 004.

Condition	Cause	Correction
No shift (warm or cold state)		
— Shift 3–4	a) Brake F faulty.	a) Disassemble clutches – see 24 23 022.
	b) Program switch faulty.	b) Replace program switch – see 61 31 265.
— Shift 1–2 Engine speed does not exceed stall speed in drive and full load.	a) Pulse sender faulty.	a) Replace pulse sender – see 24 34 870.
Car moves off in 2nd gear	a) Transmission electronics faulty.	a) Check transmission electronics.
	b) Solenoid valve (1) faulty.	b) Replace solenoid valve – see 24 34 851.
	c) Shift valve 1-2 seized.	c) Replace valve body – see 24 30 004.
Car moves off in 3rd gear	a) Transmission electronics faulty.	a) Check transmission electronics.
	b) Solenoid valve (1 or 2) faulty.	b) Replace solenoid valve – see 24 34 851.
	c) Shift valves 1-2 and 2-3 seized.	c) Replace valve body – see 24 34 004.
Car shifts 1–3	a) Shift valve 2-3 seized.	a) Replace valve body – see 24 30 004.
	b) Transmission electronics faulty.	b) Check transmission electronics.
	c) Solenoid valve (2) faulty.	c) Replace solenoid valve – see 24 34 851.
Shift Points*		
Zero load shift not okay	a) Control unit faulty.	a) Replace control unit – see 24 61 500.
No kickdown shift	a) Kickdown switch faulty.	a) Replace switch – see 35 41 480.
Only kickdown shifts.	a) Kickdown switch faulty.	a) Replace switch – see 35 41 480.

* See Specifications

Condition	Cause	Correction
<u>Shift Transitions</u> Zero load shifts too hard	a) Control unit faulty.	a) Replace control unit – see 24 61 500.
	b) Damper faulty.	b) Replace valve body – see 24 30 004.
	c) Modulation pressure too high.	c) Replace valve body – see 24 30 004.
	d) Plates damaged.	d) Disassemble transmission – see 24 00 082.
Full load and kickdown shifts too long	a) Control unit faulty.	a) Replace control unit – see 24 61 500.
	b) Damper faulty.	b) Replace valve body – see 24 30 004.
	c) Modulation pressure too low.	c) Replace valve body – see 24 30 004.
	d) Plates damaged.	d) Disassemble transmission – see 24 00 082.
Full load and kickdown shifts too hard	a) Modulation pressure not correct.	a) Replace valve body – see 24 30 004.
	b) Damper faulty.	b) Replace valve body – see 24 30 004.
	c) Control unit faulty.	c) Replace control unit – see 24 61 500.
<u>Position 3, 3rd Gear</u> No engine braking	a) Clutch E damaged.	a) Disassemble clutches – see 24 23 022.
<u>Position 2</u> Manual downshift 3–2 not okay	a) Locking valve 2 sticks.	a) Replace valve body – see 24 30 004.
	b) Governor sticks.	b) Replace governor – see 24 32 004.
	c) Transmission electronics faulty.	c) Check transmission electronics.
	d) Solenoid valve (2) faulty.	d) Replace solenoid valve – see 24 34 851.
No engine braking	a) Brake C' or clutch E damaged.	a) Disassemble clutches – see 24 23 022.
<u>Position 1</u> Manual downshift 2–1 not okay	a) Locking valve 1 sticks.	a) Replace valve body – see 24 30 004.
	b) Transmission electronics faulty.	b) Check transmission electronics.
	c) Solenoid valve (1) faulty.	c) Replace solenoid valve – see 24 34 851.

Condition	Cause	Correction
No engine braking	a) Brake D or clutch E damaged.	a) Disassemble clutches – see 24 23 022.
Converter Lockup Clutch		
Shift speed not correct	a) Converter lockup hysteresis valve sticks.	a) Replace valve body – see 24 30 004.
	b) No 4th gear.	b) Replace valve body – see 24 30 004.
	c) Control unit faulty.	c) Replace control unit – see 24 61 500.
Shift transition too hard	a) Converter lockup damper faulty.	a) Replace valve body – see 24 30 004.
	b) Converter not okay.	b) Replace torque converter – see 24 40 004.
No shift	a) Valve body not okay.	a) Replace valve body – see 24 30 004.
	b) Converter lockup clutch faulty.	b) Replace torque converter – see 24 40 004.
	c) No 4th gear.	c) Replace valve body – see 24 30 004.
	d) Transmission electronics faulty.	d) Check transmission electronics.
	e) Solenoid valve (3) faulty.	e) Replace solenoid valve – see 24 34 851.
	f) Torque converter faulty.	f) Replace torque converter – see 24 40 004.
Converter lockup clutch always closed. (engine dies in driving position)	a) Transmission electronics faulty.	a) Check transmission electronics.
	b) Solenoid valve (3) faulty.	b) Replace solenoid valve – see 24 34 851.
General information		
Shifts only as position	a) Transmission electronics faulty.	a) Check transmission electronics.
	b) Program switch faulty.	b) Replace program switch – see 61 31 265.
Fault indicator lights up	a) Transmission electronics faulty.	a) Check transmission electronics.
	b) Solenoid valve (2) faulty.	b) Replace solenoid valve – see 24 34 851.
Fault indicator lights up while driving	a) Transmission electronics faulty.	a) Check transmission electronics.
	b) Plug on transmission has poor contact.	b) Check plug connection.

Condition	Cause	Correction
Noise and then power flow interruption after long	a) Oil filter screen on valve body dirty.	a) If oil sump does not contain bits of burnt clutch liners, only replace oil filter screen. Otherwise exchange the transmission.
No power flow in forward or reverse, loud noise.	a) Drive plate between converter and engine torn off.	a) Replace drive plate or converter – see 11 22 051 or 24 40 004.
Noise		
Loud noise in all position, especially with cold oil. Oil pump suction noise.	a) Oil level too low. b) Valve body leaks.	a) Correct the oil level. b) Replace valve body – see 24 30 004.
Loud, screeching noise depending on speed in all positions, especially with warm oil, occurring after long drive; sometimes accompanied by power flow interruption.	a) Oil filter screen dirty.	a) If oil sump does not contain bits of liners, only replace oil filter screen. Otherwise exchange the transmission.
Loud noise with converter lockup clutch closed	a) Torsion damper faulty.	a) Replace torque converter – see 24 40 004.
Leakage		
Oil drips out of converter bell housing	a) Seal in pump housing damaged. b) Pump housing leaks. c) Converter leaking at welded seam. d) Radial oil seal for torque converter leaks.	a) Replace seal – see 24 31 004. b) Replace pump assembly – see 24 31 004. c) Replace converter – see 24 40 004. d) Replace radial oil seal – see 24 12 504.
Leak between transmission case and oil sump	a) Oil sump mounting bolts not tightened correctly. b) Oil sump gasket damaged.	a) Tighten bolts*. b) Replace gasket – see 24 11 004.
Leak between transfer plate and transmission case (especially in area of pump pressure bore)	a) Mounting bolts on converter bell housing loose. b) Gasket damaged.	a) Tighten bolts*. b) Replace gasket.
Oil loss on transmission plug	a) O-ring faulty.	a) Replace O-ring – see 24 30 004.
Oil loss on output	a) Radial oil seal on output damaged.	a) Replace radial oil seal – see 24 12 014.

* See Specifications for tightening torque

Condition	Cause	Correction
Oil loss through or on vent	a) Oil level too high.	a) Correct the oil level.
	b) Wrong oil (strong foaming).	b) Replace oil; if necessary remove transmission and drain complete oil including oil of torque converter.
	c) Vent cap missing.	c) Mount cap or replace vent.
	d) O-ring on vent damaged.	d) Remove transmission extension and replace O-ring.
	e) Preload of circlip insufficient.	e) Replace circlip.
Oil loss on cooler pipe	a) Connection loose.	a) Tighten bolts*.
	b) Cooler pipe damaged.	b) Replace cooler pipe.
	c) Cooler leaks.	c) Replace cooler – see 17 11 000.
Oil loss on transfer plate	a) Plug on transfer plate leaks.	a) Tighten plug*.
		b) Replace seal.
Leak between transmission case and transmission extension	a) Mounting bolts loose.	a) Tighten bolts*.
	b) Gasket damaged.	b) Replace gasket – see 24 11 054.

* See Specifications for tightening torque

Condition	Cause	Correction
Position R No reverse gear	a) Solenoid valve (4) faulty. b) Wire to solenoid valve (4) grounded out. c) Reverse gear locking valve seized. d) Damper B malfunctions.	a) Replace solenoid valve – see 24 34 851. b) Replace wire harness – see 24 35 500. c) Replace valve body – see 24 30 004. d) Replace valve body – see 24 30 004.
No reverse or forward gear	a) Main pressure valve seized, spring broken.	a) Replace valve body – see 24 30 004.
Insufficient power transmission.	a) Pressure too low in clutch B or E, brake D	a) Replace valve body – see 24 30 004.
Hard jolt when moving into position R	a) Damper B malfunctions b) Modulation pressure too high.	a) Replace valve body – see 24 30 004.
Position D No forward gear	a) Main pressure valve seized, spring broken	a) Replace valve body – see 24 30 004.
Insufficient power transmission	a) Pressure too low in clutch A	a) Replace valve body – see 24 30 004.
No shift function	a) Pulse sender faulty. b) Wire to pulse sender grounded out.	a) Replace pulse sender – see 24 34 870. b) Replace wire harness – see 24 35 500.
No shift function 1–2 / 2–1	a) Solenoid valve (1) faulty. b) Wire to solenoid valve (1) grounded out. c) Shift valve 1-2, control valve 1-2 / 3-4, pressure reducing valve 1 seized.	a) Replace solenoid valve – see 24 34 851. b) Replace wire harness – see 24 35 500. c) Replace valve body – see 24 30 004.

Condition	Cause	Correction
Position D		
No shift function 2–3 / 3–2	a) Solenoid valve (2) faulty.	a) Replace solenoid valve – see 24 34 851.
	b) Wire to solenoid valve (2) grounded out.	b) Replace wire harness – see 24 35 500.
	c) Shift valve 2-3 seized.	c) Replace valve body – see 24 30 004.
No shift function 3–4 / 4–3	a) Solenoid valve (1) faulty.	a) Replace solenoid valve – see 24 34 851.
	b) Control valve 1-2 / 3-4 seized.	b) Replace valve body – see 24 30 004.
Upshifts 1–2 / 2–3 / 3–4 too long	a) Pressure regulator faulty.	a) Replace pressure regulator – see 24 34 860,
	b) Wire to pressure regulator grounded out.	b) Replace wire harness – see 24 35 500.
	c) Damper faulty.	c) Replace valve body – see 24 30 004.
	d) Modulation valve, pressure reducing valve 1 and 2 stick.	d) Replace valve body – see 24 30 004.
Upshifts 1–2 / 2–3 /3–4 too hard	a) Pressure regulator faulty.	a) Replace pressure regulator – see 24 34 860.
	b) Modulation valve sticks.	b) Replace valve body – see 24 30 004.
	c) Damper faulty.	c) Replace valve body – see 24 30 004.
Downshift 4–3 too hard	a) Plate F dirty.	a) Replace valve body – see 24 30 004.
Manual downshifts 4–3 / 3–2 too hard	a) Damper E or C' faulty.	a) Replace valve body – see 24 30 004.

Condition	Cause	Correction
Position 1		
Manual downshift 2–1 not okay	a) Pressure regulator faulty.	a) Replace pressure regulator – see 24 34 860.
	b) Damper D faulty.	b) Replace valve body – see 24 30 004.
	c) Modulation valve sticks.	c) Replace valve body – see 24 30 004.
Converter Lockup Clutch		
No converter clutch locking	a) Solenoid valve (3) faulty.	a) Replace solenoid valve – see 24 34 851.
	b) Converter clutch damper faulty.	b) Replace solenoid valve – see 24 34 851.
	c) Converter pressure valve seized.	c) Replace valve body – see 24 30 004.
	d) Pressure reducing valve 1 seized.	d) Replace valve body – see 24 30 004.
No converter clutch unlocking	a) Solenoid valve (3) faulty.	a) Replace solenoid valve – see 24 34 851.
	b) Wire to solenoid valve (3) grounded out.	b) Replace wire harness – see 24 35 500.
Main pressure too high in all positions	a) Pressure regulator faulty.	a) Replace pressure regulator – see 24 34 860.
	b) Main pressure valve seized.	b) Replace valve body – see 24 30 004.
	c) Modulation pressure too high.	c) Replace valve body – see 24 30 004.

00 11 239 Oil change in manual transmission
(Engine M60 transmission A5S 560 Z)

See Repair Instructions for 5 Series E34

24 00 007 Adjusting the shift lever
- transmission A5S 560 Z -

Refer to Repair Instructions for 5 Series E34

24 00 026 Removing and installing automatic transmission (A5S560Z/ M60 Engine)

Disconnect ground lead from battery.
Caution!
When ground lead is disconnected, the fault memories in the control units are cancelled. For this reason, first read fault memories with tester and print out any faults in the system.

Remove complete exhaust system 18 00 020.
Remove engine splash guard.
Remove fan coupling 11 42 020

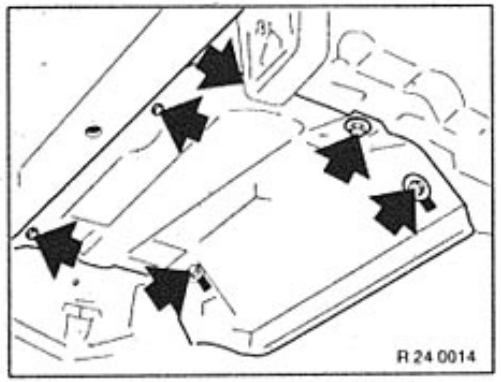

Remove heat shield.

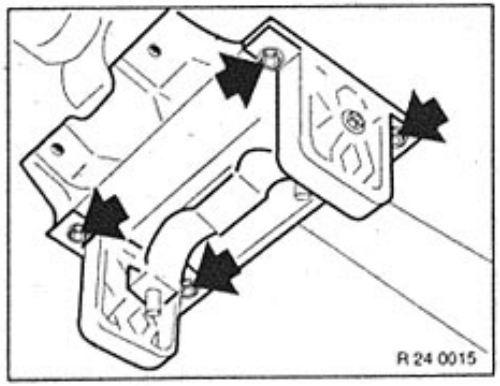

Remove central exhaust bracket.

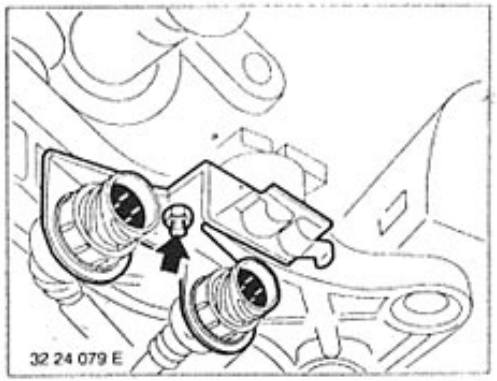

Remove bracket for Lambda oxygen sensor plug.

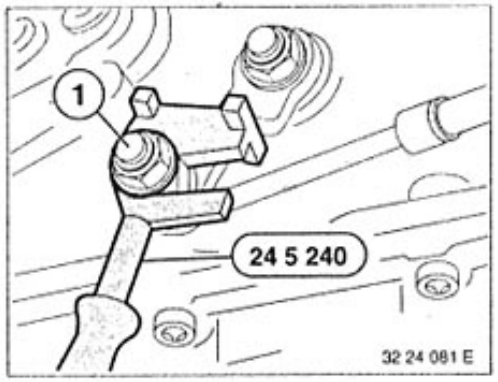

Unfasten nut (1).

Caution!
To prevent distortion of cable, always brace with special tool 24 5 240 on clamping screw.
Tightening torque 25 16 2AZ*

Note!
The special tool 24 5 240 can now be fitted in setting "P".

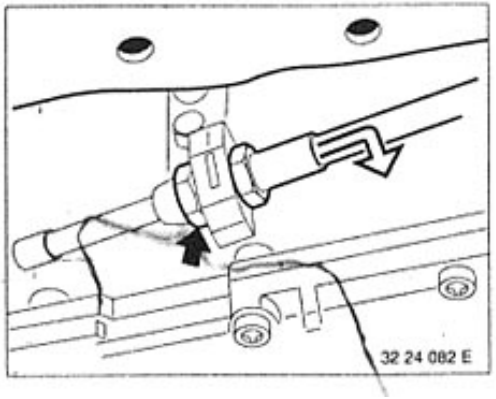

Remove cable sleeve from counter support.
Pull out cable.

Installation:
Tightening torque 25 16 1AZ*

Adjust shift mechanism 24 00 007

* Refer to Technical Data

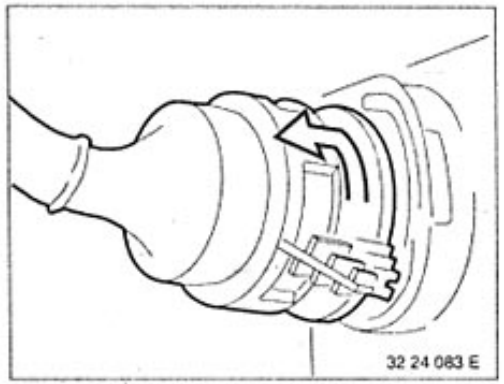

Twist bayonet connection counter-clockwise.
Pull off plugs.
Lift cable harness out of holder.

Installation:
Fit connector in such a way that marker lines are aligned with one another.

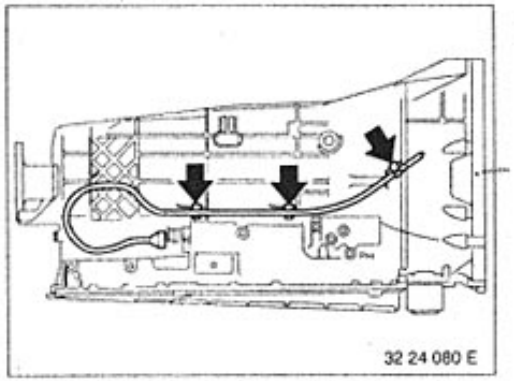

Unclip cable bracket from transmission.

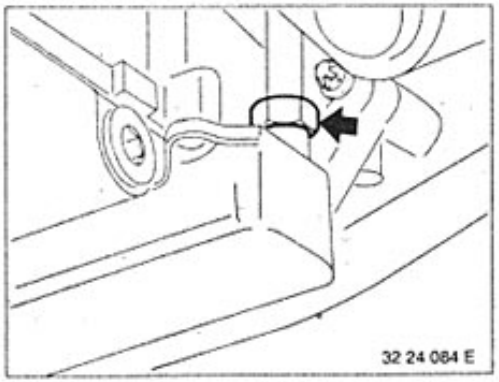

Unscrew left and right coolant lines from transmission oil cooler and jam to one side behing the exhaust pipes.

Note:
When the screw connections are opened, approx. 1 liter of coolant escapes.

Top up coolant, see 17 00 005

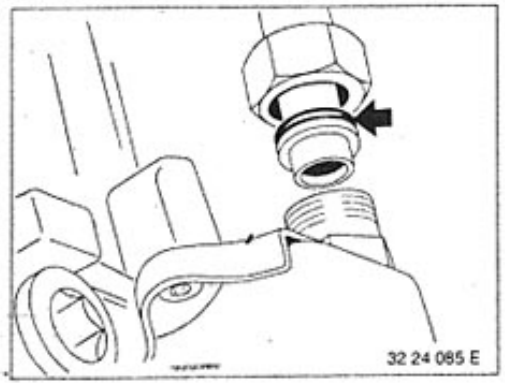

Installation:
Replace O-rings.
Tightening torque 17 22 5AZ*

* Refer to Technical Data

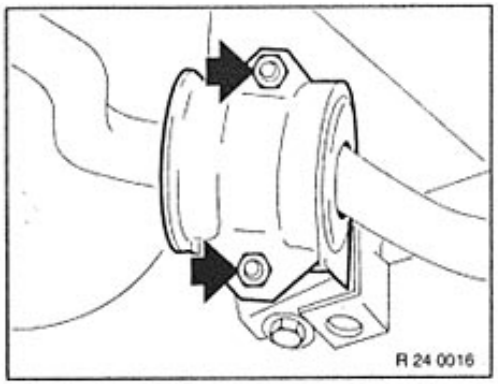

Unscrew stabilizer on left and right sides and leave hanging downwards.

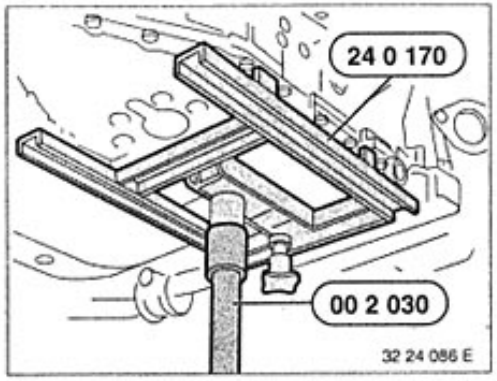

Support transmission with tool 24 0 170 together with lifting fixture 00 2 030.

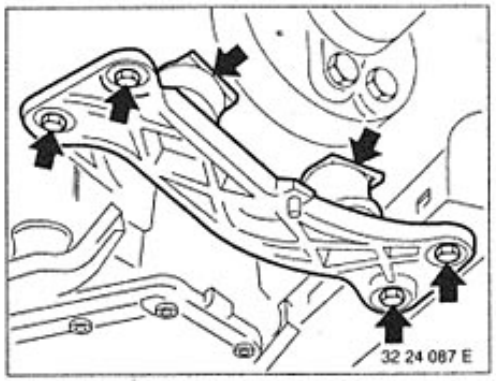

Unscrew crossmember.

Installation:
Balance the transmission, see Gr. 26.
Tightening torque 24 71 1AZ*

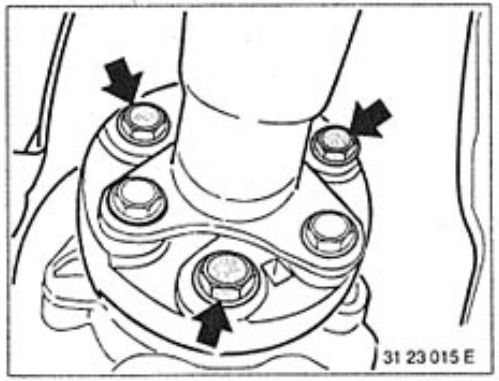

Unscrew joint disk from transmission.

* Refer to Technical Data

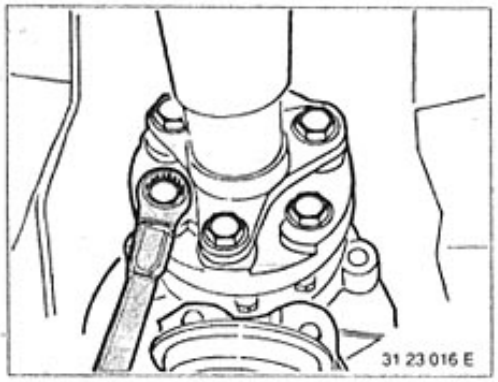

Installation:
Replace stop nuts.
Tightening torque 26 11 1AZ*

Caution!
To avoid torsion stress on the joint disc, only turn nuts on flange side - if design permits this.

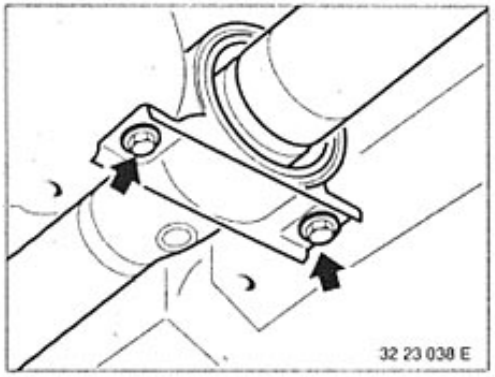

Remove center mount.
Bend propeller shaft downwards and remove from centering spigot on transmission.

Caution!
Do not allow the propeller shaft to drop into the joints.
Tie up propeller shaft.

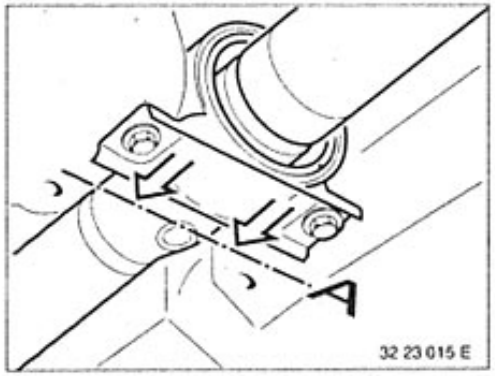

Installation:
Preload center bearing in direction of travel (A) = 2 ... 4 mm.
Tightening torque 26 11 6AZ*

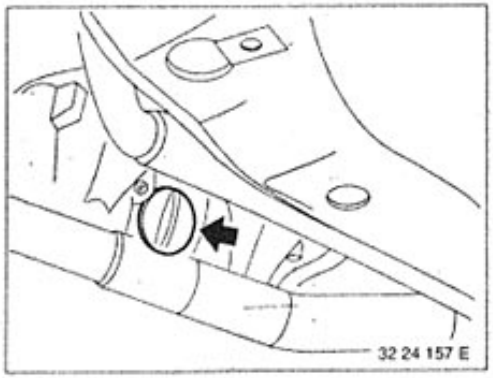

Lift cover off opening in oil pan.

* Refer to Technical Data

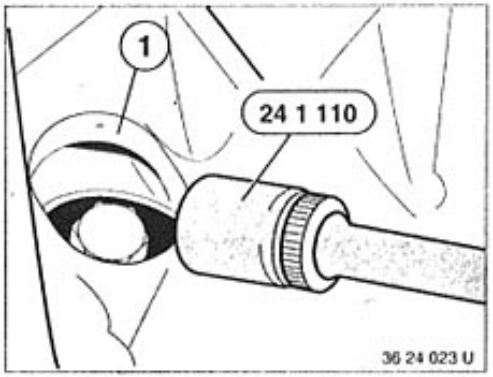

Unfasten torque converter from drive plate with special tool 24 1 110. (3 screws).
To do this, turn flywheel repeatedly, each time by 1/3 turn.

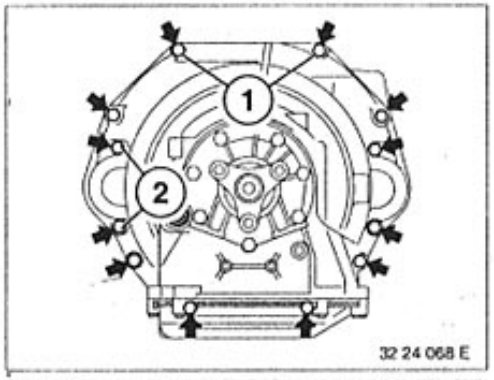

Lower transmission.
Disconnect transmission from engine flange. (Torx screws).

Note:
The screws (1) = Torx E 10
all other Torx E 12
The screws opposite the starter motor have nuts fitted to their front faces.

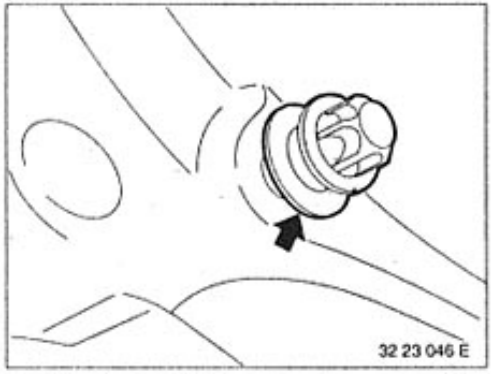

Installation:
Note that washers are fitted to the Torx screws.
Tightening torque 24 00 1AZ*

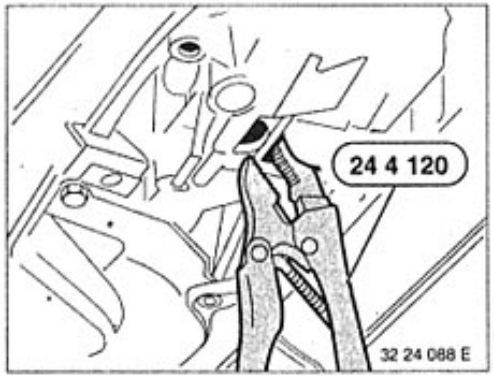

Protect converter from slipping out by placing special tool 24 4 120 on transmission case with flat side of retaining tab (1) facing torque converter and clamp in place.
Remove transmission from engine.

Caution!
To transport the transmission, lower transmission fully onto lifting fixture.

Transmission weight approx. 120 Kp

* Refer to Technical Data

Caution!
When putting down transmission without mount, do not place onto oil cooler.

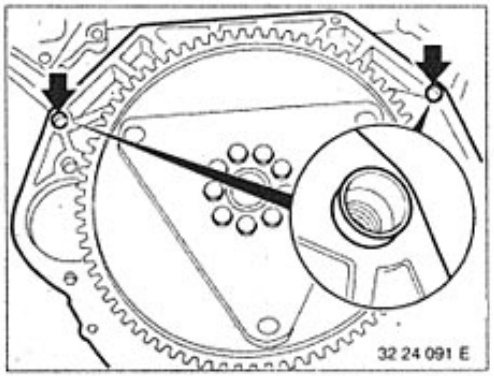

Note hollow bushes.
If necessary, move or replace hollow bushes on transmission.

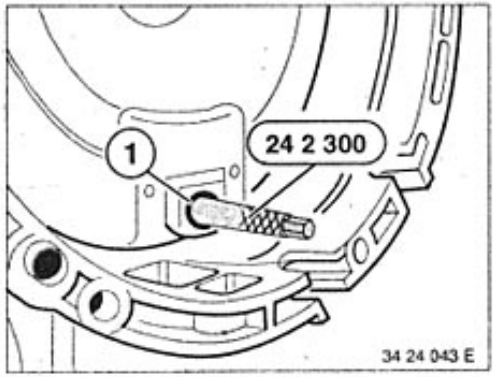

Installation:
Turn the torque converter on the transmission until bore (1) faces down perpendicular to the tab.
Screw special tool 24 2 300 into the tab.

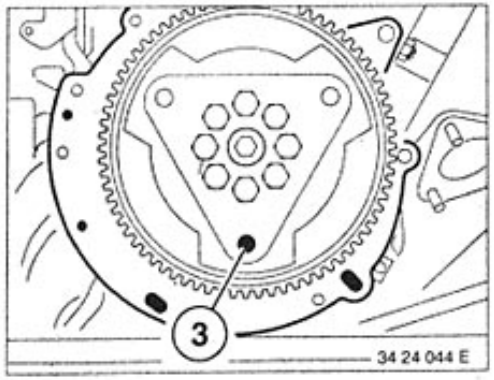

Installation:
Bore (3) on drive plate must point perpendicularly to center of opening in oil sump.

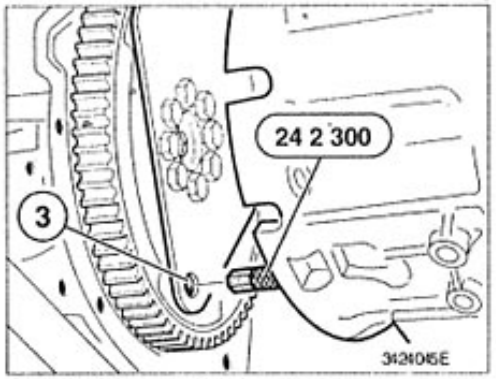

Installation:
Lift automatic transmission until bore (3) in drive plate is reached.
Guide transmission in carefully with special tool 24 2 300 in bore (3) on the drive plate.
Bolt transmission case to engine.
Unscrew special tool 24 2 300 from the tab and pull forwards.
Bolt torque converter to flywheel.

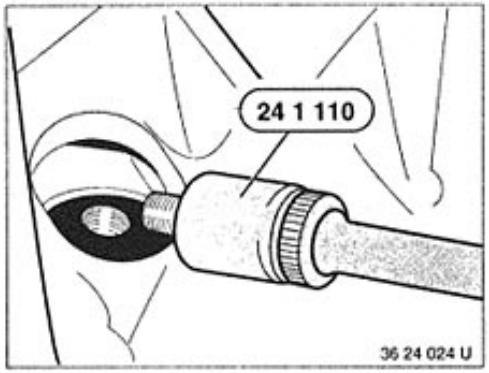

Installation:
Install bolt using special tool 24 1 110 and tighten using a torque wrench.
Tightening torque 24 40 1AZ*

Caution!
Only use original screws **.

If necessary, check / top up transmission fluid see 00 11 239

* Refer to Technical Data
** BMW Parts Service

24 00 026 Removing and installing automatic transmission (A5S560Z / M73 Engine)

Note:
After completion of the work, check transmission oil level and top up if necessary, refer to 00 11 239 (A5S560Z)

Disconnect battery,
refer to instructions on disconnecting and connecting battery in MG 12.

Remove complete exhaust system,
refer to 18 00 020.

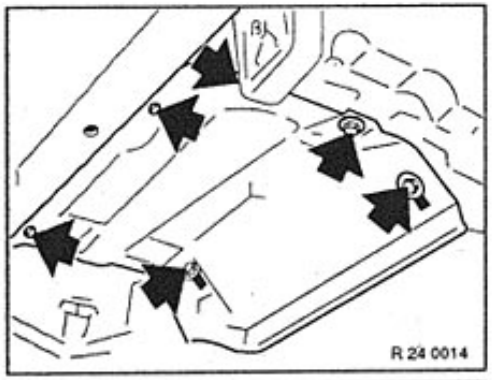

Remove heat shield.

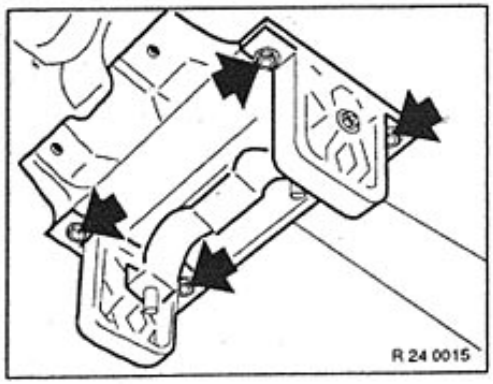

Remove exhaust bracket.

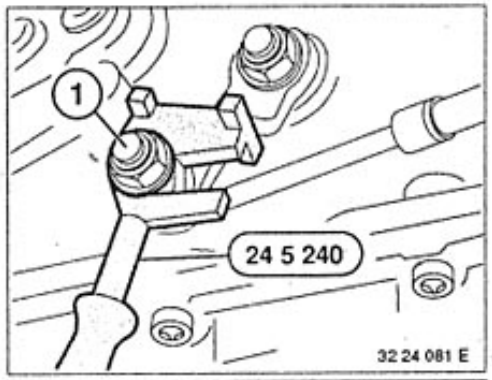

Fit special tool 24 5 240 to the shift lever.

Note:
Only possible to fit it in setting "P".

Unscrew nuts (1).

Installation:
Adjust shift lever,
refer to 24 00 007.

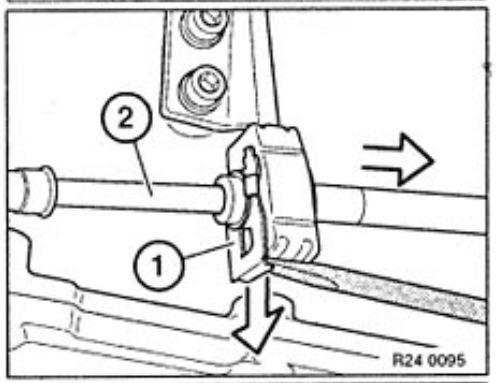

Pry out retaining plate (1) with a screwdriver.
Remove cable (2) in direction of arrow.

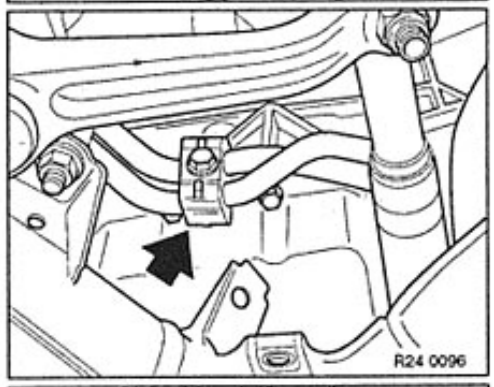

Remove heat shield from beneath steering gear.
Remove bracket for oil lines from the engine oil pan.

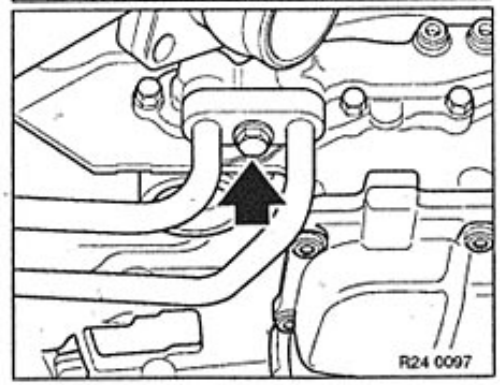

Place drip tray under unit.
Unfasten screw and remove oil lines.

Installation:
Replace O-rings.

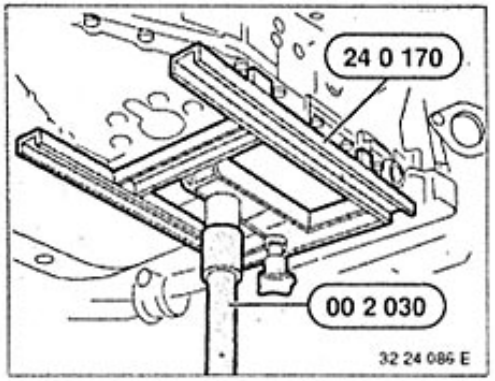

Support transmission using special tools 00 2 030 / 24 0 170.

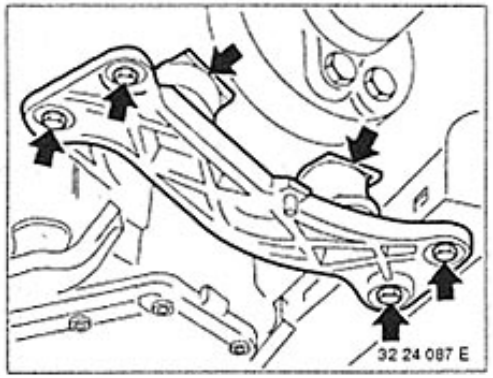

Unfasten screws and remove transmission cross-member.

Installation:
Tightening torque,
refer to Technical Data 24 71 1AZ.

Disconnect flange on transmission propeller shaft and tie to one side,
refer to 26 11 000.

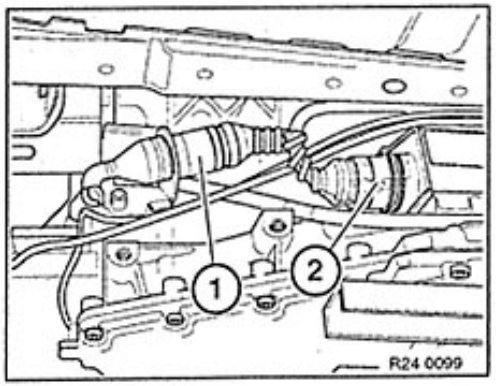

Unlock cable connectors (1 ... 2) and disconnect.
Unclip cable from transmission case.

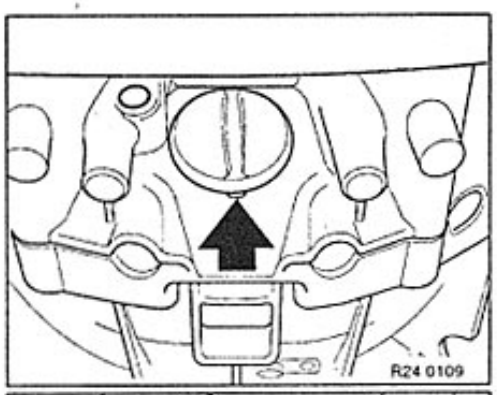

Lift out cover.

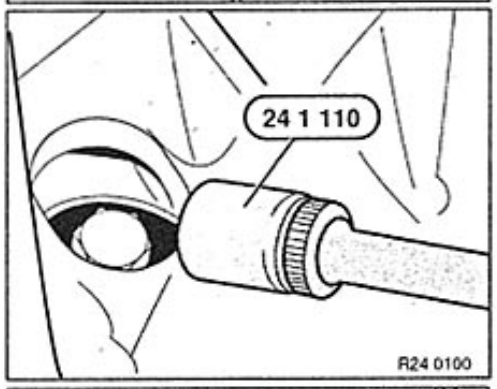

Unfasten 4 retaining screws for torque converter with special tool 24 1 110.

Installation:
Tightening torque,
refer to Technical Data 24 40 1AZ.

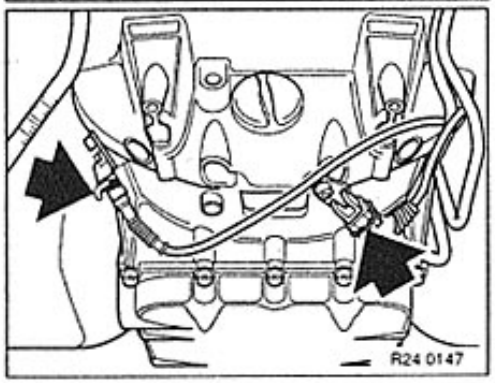

Remove impulse sensor.

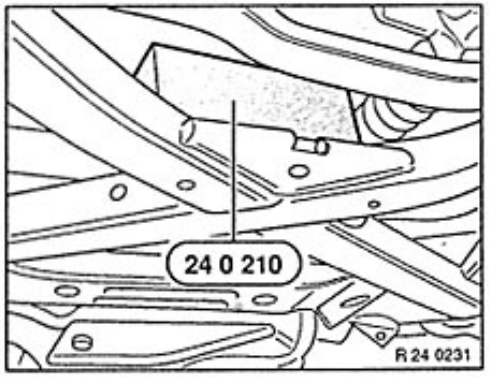

Insert special tool 24 0 210 between engine oil pan and reinforcement bracket.

Lower transmission until engine just makes contact with special tool.

Caution!
Do not lower workshop hoist any further or the engine oil pan may be damaged.

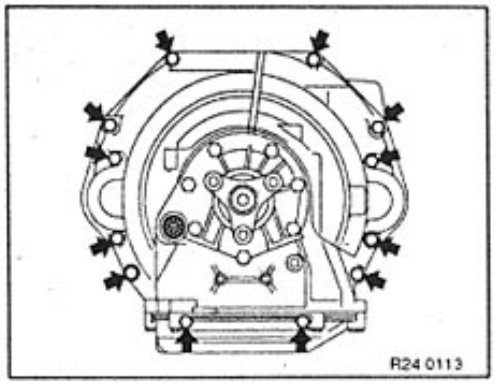

Unfasten screws.

Caution!
When removing the transmission, ensure that the torque converter remains in the transmission.
Avoid damaging impulse teeth on the flywheel.

Pull transmission as far backwards as possible and lower carefully.

Installation:
Only fit screws together with washers.
Tightening torque,
refer to Technical Data 24 00 1AZ.

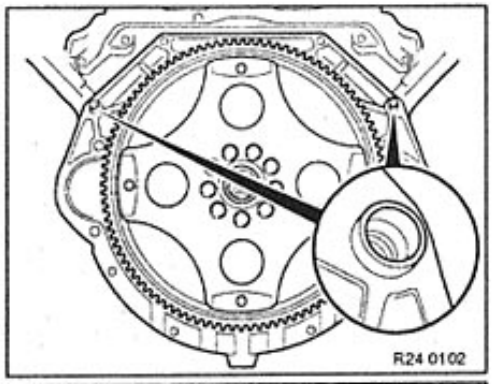

Installation:
Note dowel sleeves.

If necessary, pull dowel sleeves out of transmission case and install in engine block.

Replace damaged dowel sleeves.

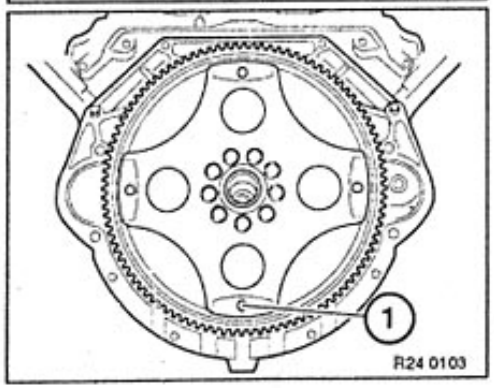

Installation:
One of the four bores (1) in the drive plate must be accessible from aperture in oil pan.

24 00 046 Installing replacement transmission

Refer to Repair Instructions for 5 Series E34

24 11 008 Removing / sealing transmission oil pan

Refer to Repair Instructions for 5 Series E34

24 12 016 Replacing radial seal for output flange

Refer to Repair Instructions for 5 Series E34

24 12 106 Replacing radial seal for hand selector valve shaft

Refer to Repair Instructions for 5 Series E34

24 12 506 Replacing radial seal for torque converter

Refer to Repair Instructions for 5 Series E34

24 13 156 Replacing output flange

Refer to Repair Instructions for 5 Series E34

24 13 706 Replacing mount for transmission extension

Refer to Repair Instructions for 5 Series E34

24 30 006 Removing and installing / replacing shift unit

Refer to Repair Instructions for 5 Series E34

24 31 156 Removing and installing / replacing transmission oil screen

Refer to Repair Instructions for 5 Series E34

24 34 006 Removing and installing or replacing parking interlock (pawl / leg spring)

Refer to Repair Instructions for 5 Series E34

24 34 857 Replacing solenoid valves and / or pressure regulator

Refer to Repair Instructions for 5 Series E34

24 34 873 Replacing impulse sensor (turbine speed)
(oil pan removed)

Refer to Repair Instructions for 5 Series E34

24 34 874 Replacing impulse sensor (output speed)
(oil pan removed)

Refer to Repair Instructions for 5 Series E34

24 35 501 Replacing wiring harness in automatic transmission
(shift unit removed)

Refer to Repair Instructions for 5 Series E34

24 40 007 Removing and installing / replacing automatic transmission

Refer to Repair Instructions for 5 Series E34

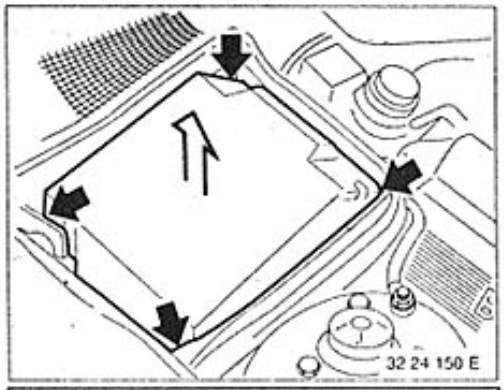

24 61 501 Removing and installing or replacing control unit (EGS)

Unscrew cover from E box (right side, viewed in direction of travel).

Installation:
Note seals on wiring harnesses and cooling air duct.

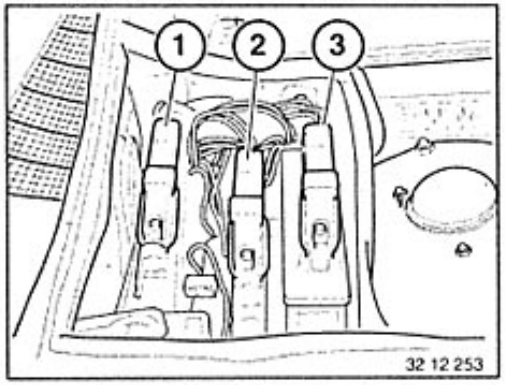

Configuration of control units:

1 Control unit for ABS
2 Control unit for DME
3 Control unit for automatic transmission (EGS)

Note:
Depending on the construction status of a vehicle, the arrangement of these control units may vary.
Note lettering on control unit.

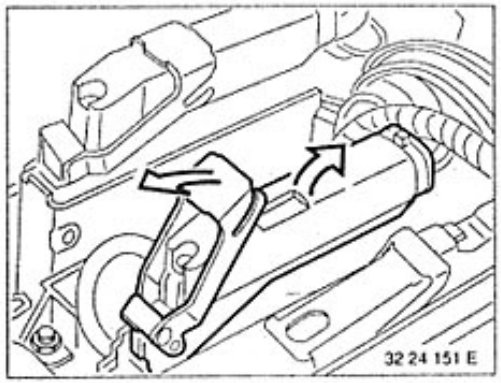

Remove connector from control unit.

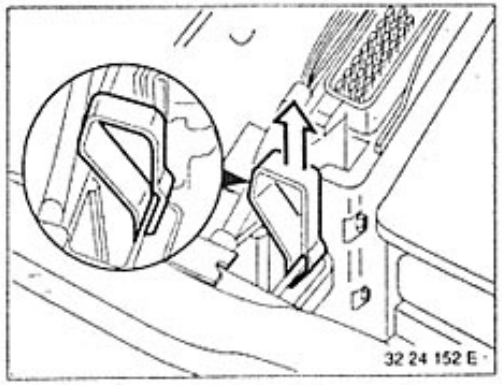

Remove clips.

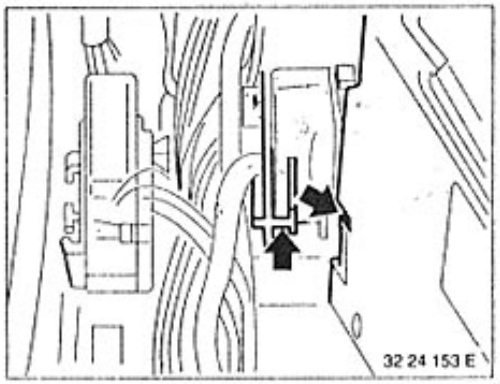

Remove control unit.

Installation:
Attach control unit by fitting recesses in case to retaining lugs on equipment carrier.

Code is on identification plate.
Allocation and model, see Parts Catalogue.

Additional instructions: see Electrical Troubleshooting Manual

25 Gear shift mechanism

Manual transmission

Automatic transmission

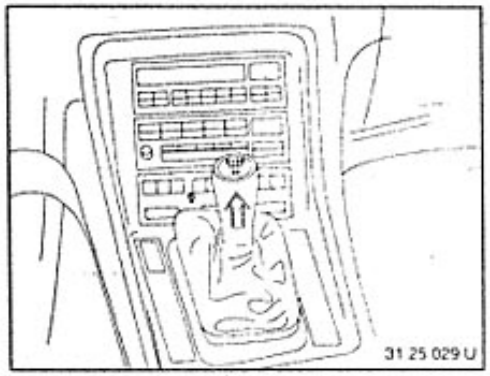

25 11 000 Removing and installing shift lever

Lift cover off retaining tabs.
Pull off shift lever knob by hand with a sudden jerk.
Pulling-off force: approx. 40 kp.
Remove complete exhaust assembly 18 00 020. Remove heat shield.
Remove propeller shaft from transmission and center mount (see 26 11 000).

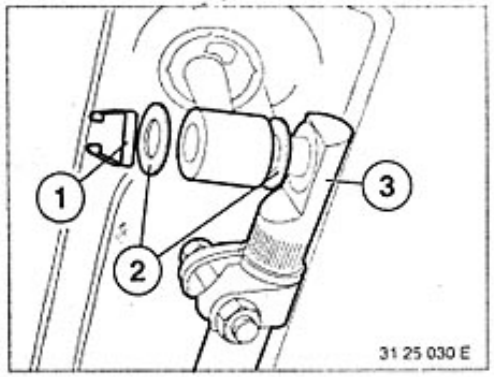

Lift out retainer (1).
Remove disk (2).
Remove shift rod (3).

Installation:
Coat bearing with Klüber Polylup GLY 801*.

Note:
On vehicles with an M60 engine and an S6S 420 D transmission, the shift rod is attached from left to right.

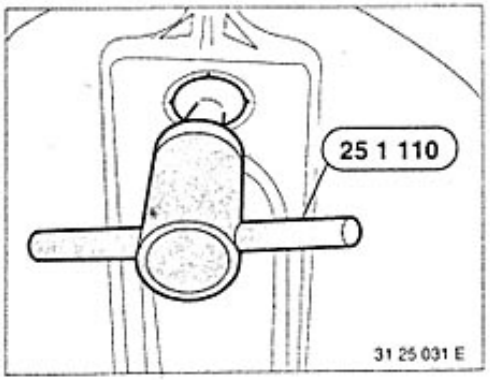

Fit pin wrench 25 1 110 and rotate 90° anti-clockwise.
Press bearing shell upwards.

* Source of Supply: BMW Parts Service.

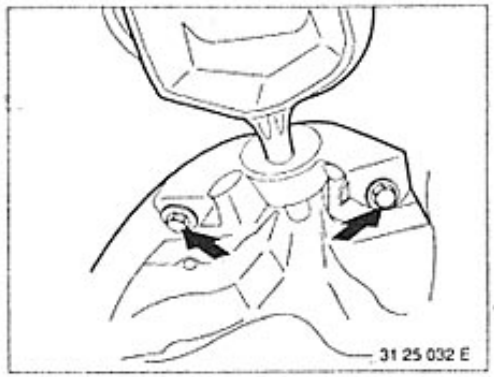

Remove support bearing from body.

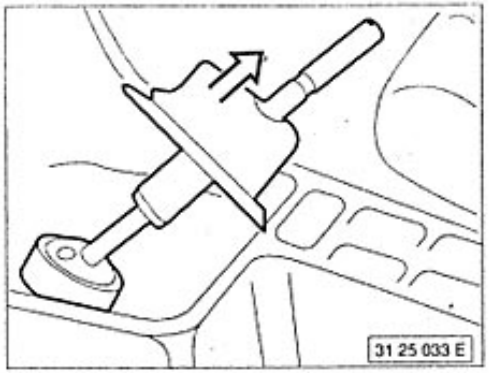

Remove rubber grommet from body opening and lift out upwards together with shift lever.

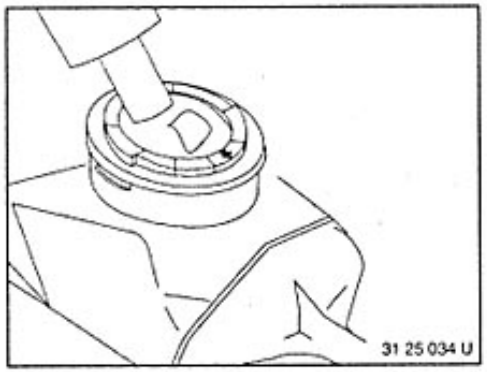

Install shift lever with bearing shell.
Install bearing shell with tabs or arrows pointing towards bearing pin.

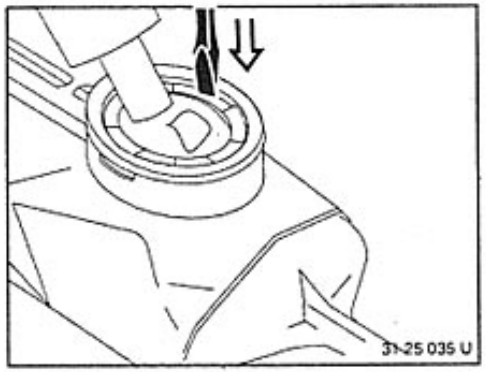

Press down on bearing shell at point of retaining tabs until they are heard to engage.

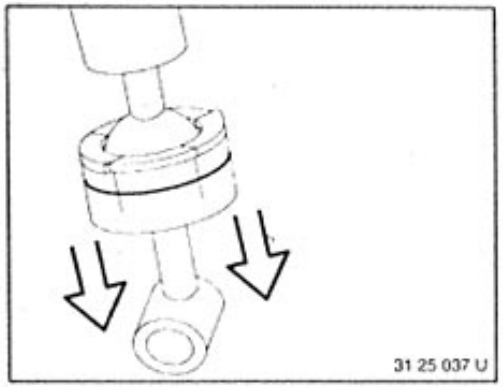

Installation:
Button in inner dust cover over the shift arm and outer dust cover in the body opening.

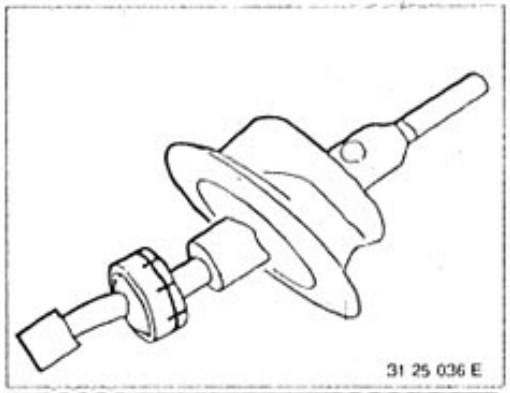

25 11 001 Replacing complete shift lever

Remove shift lever 25 11 000.
Remove rubber grommet from shift lever.

Installation:
Fit rubber grommet to shift lever with tire fitting compound.

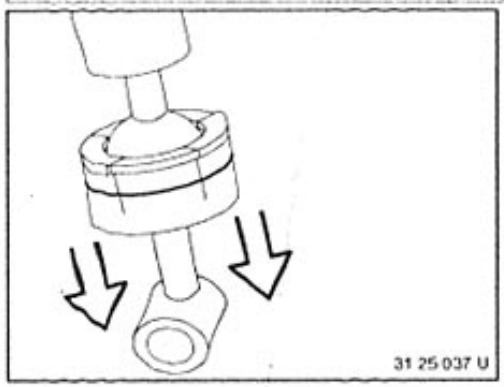

Press bearing shell downwards to remove.

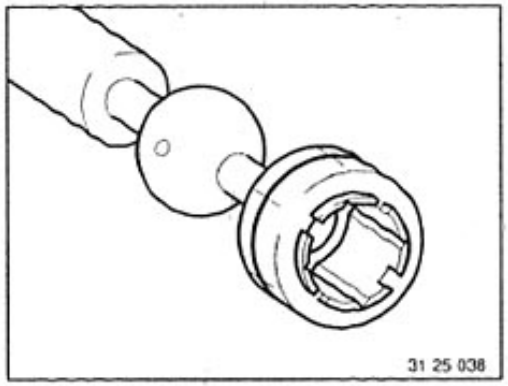

The bearing shell can be removed from the shift lever through the slots in the bearing shell.

Installation:
Coat bearing shell and ball with Klüber Polylup GLY 801*

* Source of Supply: BMW Parts Service

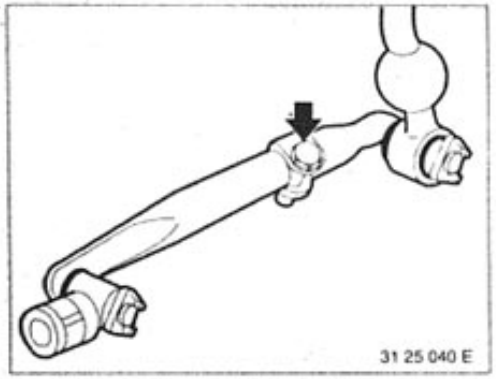

25 11 005 Adjusting shift lever

Note:
The shift rod is fitted with a clamping fixture to compensate for unfavourable tolerances.

Note:
On vehicles with an M60 engine and an S6S 420 D transmission, the shift rod is mounted from left to right.

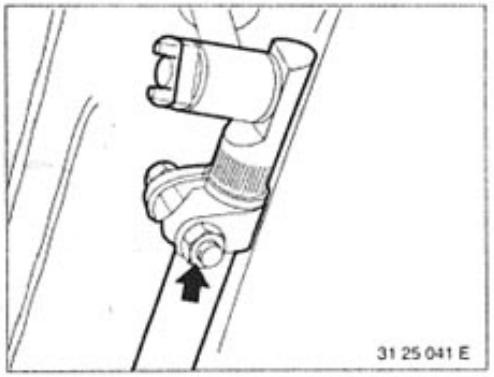

Move manual transmission into "Reverse" position.

Loosen clamping screw on the shift rod.

Unclip shift lever dust cover from console and push upwards to remove.

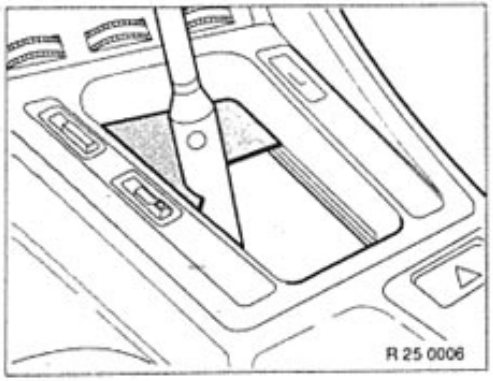

Insert template in the console aperture and press shift lever into "Reverse" setting.

Note:
Refer to BMW Service Information for sample template.

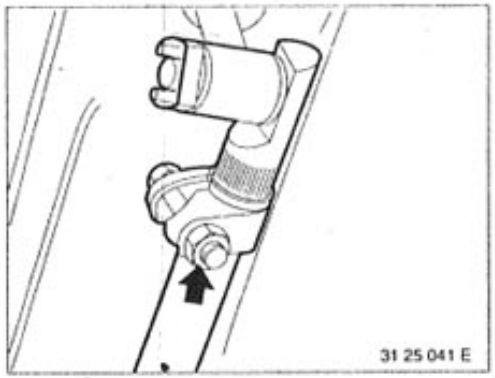

Tighten clamping screw.

25 11 111 Replacing shift rod joint

Remove propeller shaft from transmission and center bearing (see 26 11 000).

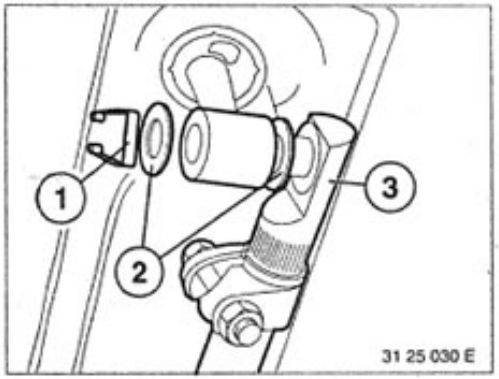

Remove shift rod from shift lever.
Remove retainer (1).
Remove disk (2).
Pull out shift rod (3).

Installation:
Coat bearing with Klüber Polylupe GLY 801*.

Note.
On vehicles with an M60 engine and an S6S 420 D transmission, the shift rod is installed from left to right.

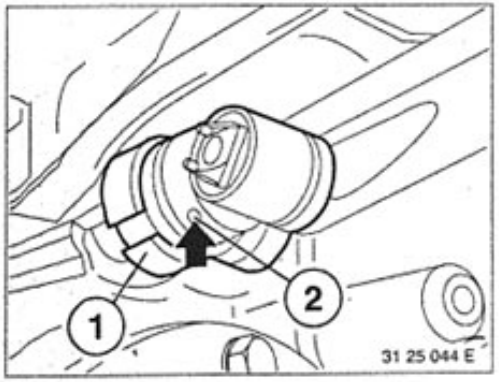

Lift retaining sleeve (1) out of groove and slide backwards.
Push pin (2) out upwards.
Remove shift rod with joint.

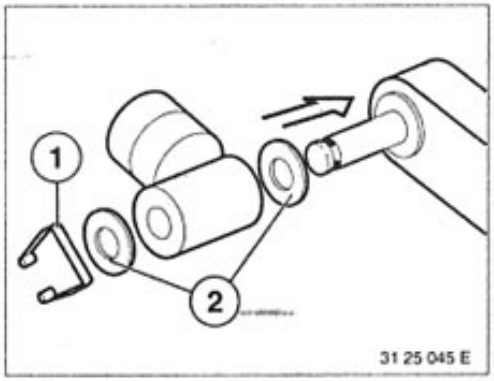

Lift out retainer (1).
Remove disks (2).
Remove shift rod.

Installation:
Check disks (2) and replace if necessary.
Coat bearing points with Klüber Polylup GLY 801*

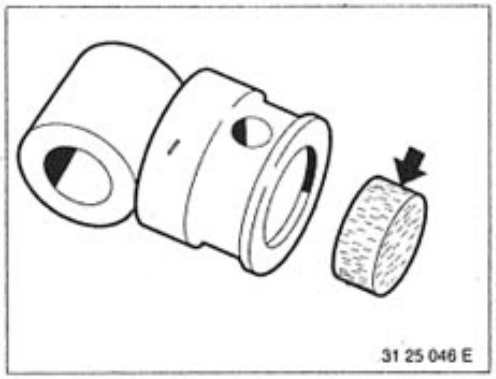

Installation:
Check damping disk in joint and replace if necessary.

* Source of Supply: BMW Parts Service

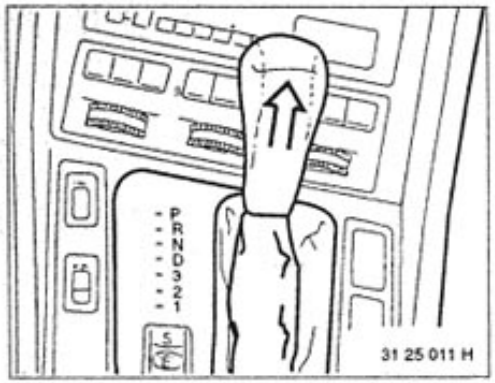

25 16 050 Removing and installing shift lever with shift tower

Remove selector lever handle by tugging firmly by hand.
Removal force approx. 25 kp.

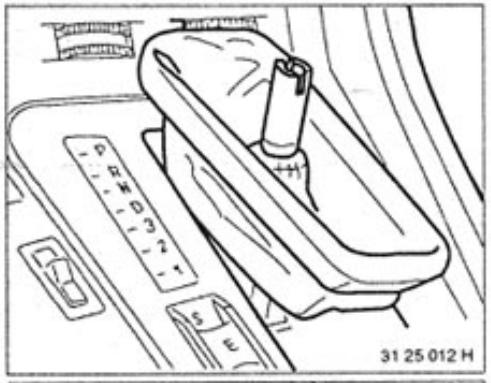

Lift off cover

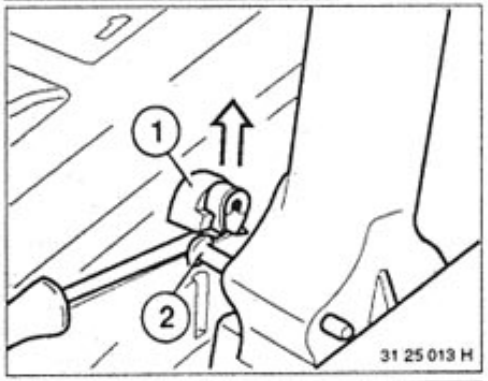

Press driver clip (1) upwards with a screw-driver until pin (2) can be moved.
Pin (2) remains in shift lever.

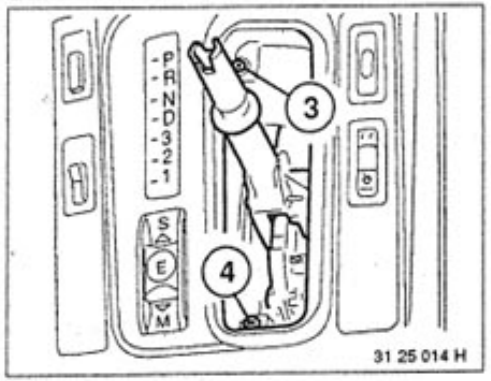

Unscrew and remove screws (3 and 4).

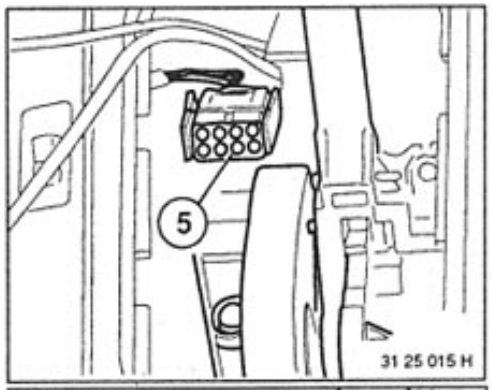

Lift out finisher.
Remove connector (5) from transmission switch.

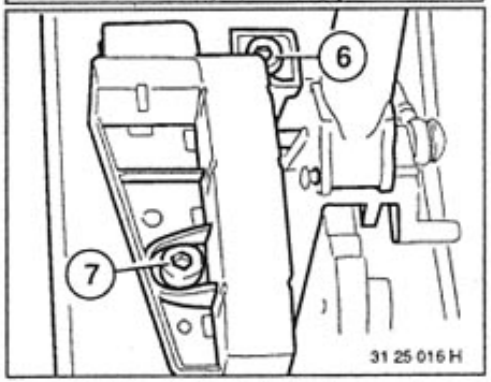

Unfasten screws (6 and 7).

Installation:
Screws are micro-encapsulated and must be replaced each time they are dismantled.
Tightening torque*

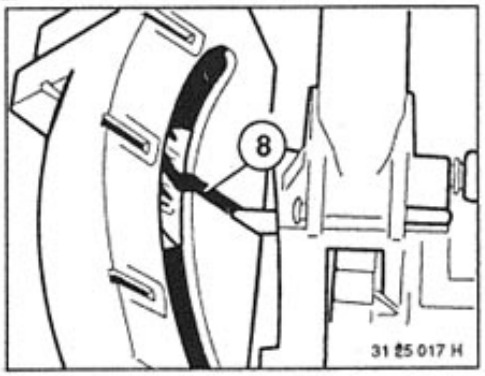

Move selector lever until transmission switch can be removed from driver pin through groove (8).

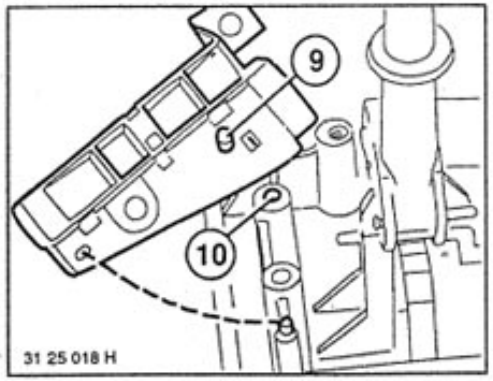

Installation:
Lug (9) on transmission switch must engage in bore (10).

* Refer to Technical Data.

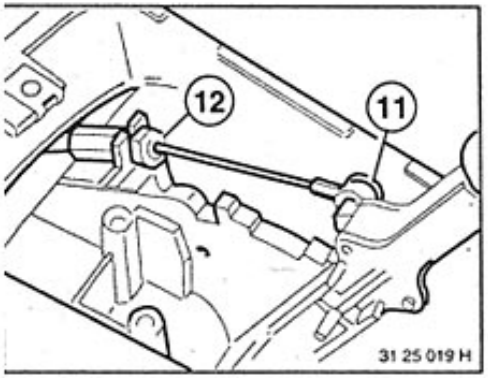

Press off retainer (11).

Installation:
Replace retainer (11).
Unscrew nut (12).
Disconnect cable.

Installation:
Adjust shift mechanism 24 00 006.

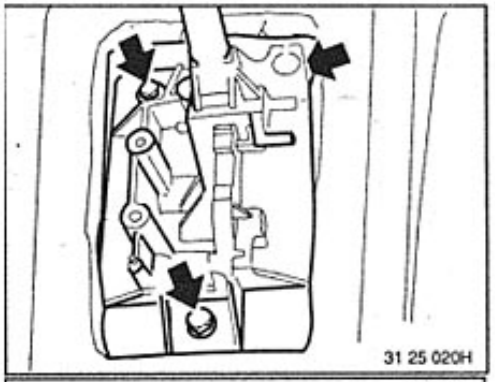

Unfasten screws.
Remove shift tower with selector lever.

Installation:

Tightening torque *

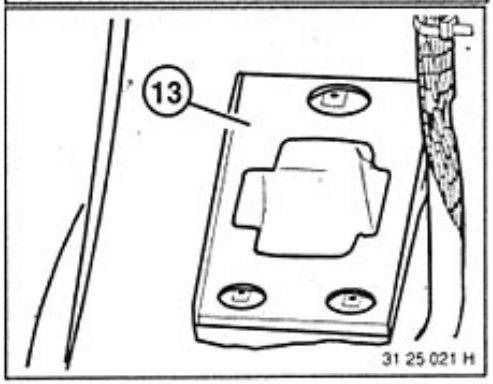

Installation:
Check that gasket (13) can be reused and replace if necessary.

* Refer to Technical Data

25 16 051 Removing and installing / replacing shift tower (step gear selection)

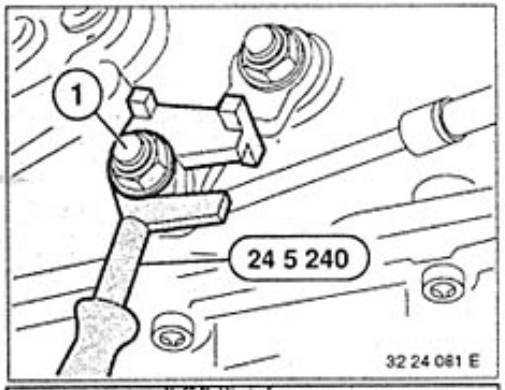

Fit special tool 24 5 240 to the shift lever.

Note:
Only possible to fit in setting "P".

Loosen nut (1).

Installation:
Adjust shift lever,
refer to 24 00 007

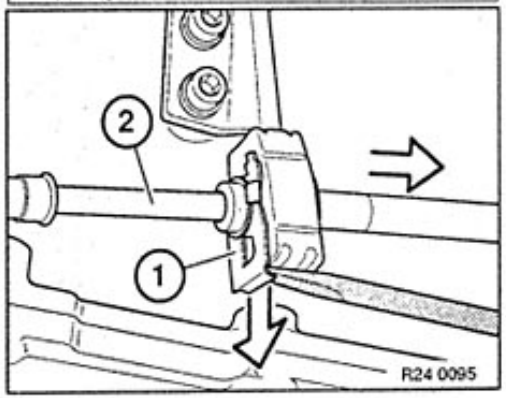

Pry out retaining clip (1) with a screwdriver.
Pull cable (2) out of bracket.

Remove finisher from centre console,
refer to 51 16 200.

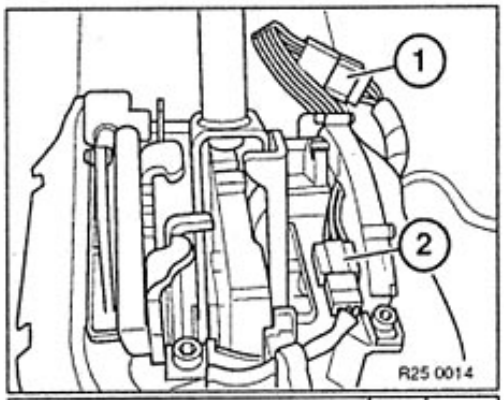

Disconnect connectors (1) and (2).

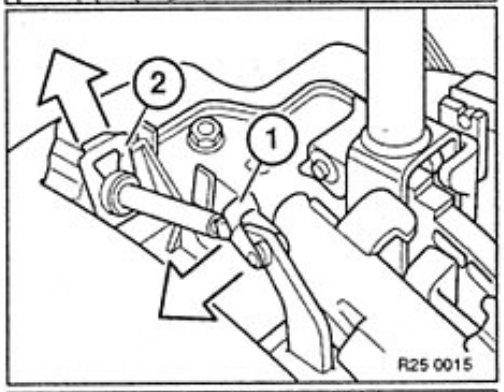

Release pin (1) and remove.
Remove retaining clip (2).
Press cable out of guide.

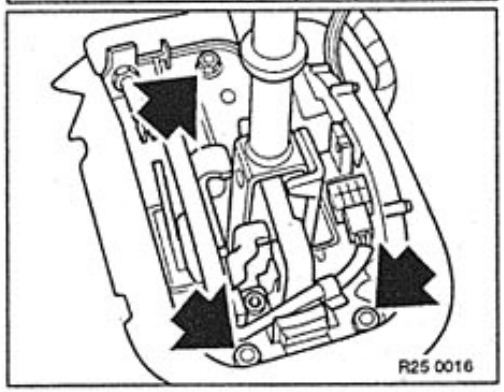

Unfasten screws.

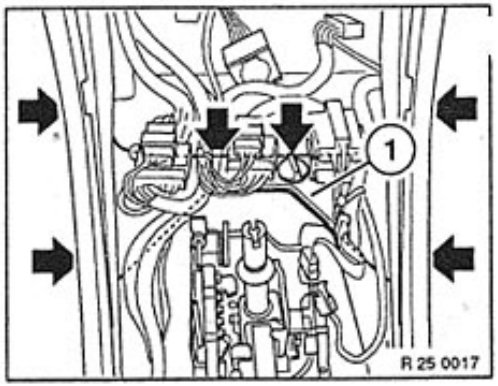

Unfasten screws.
Press reinforcement plate (1) forwards and remove shift tower.

Note:
If necessary, unfasten cable and cable connector from reinforcement plate.

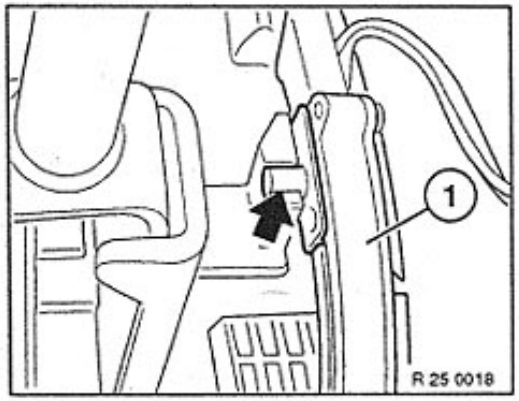

If necessary, fit position switch (1) to the new shift tower.

Installation:
The pin on the switch must be in the recess on the shift lever.

25 16 056 Removing and installing / replacing shift tower (Shift-Lock / Interlock)

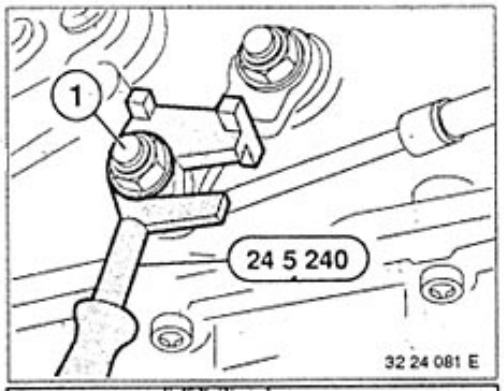

Fit special tool 24 5 240 to the shift lever.

Note:
Can only be fitted in setting "P".

Loose nut (1).

Installation:
Adjusting shift lever,
refer to 24 00 007

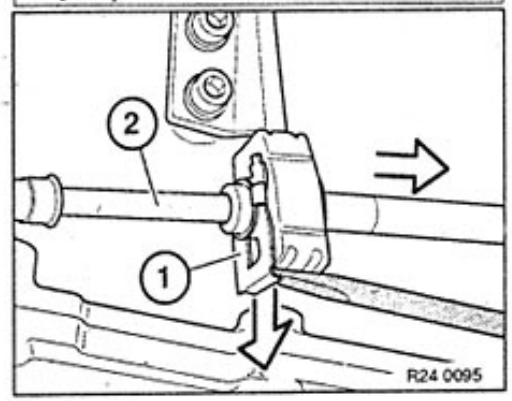

Pry out retaining clip (1) with a screwdriver.
Pull cable (2) out of bracket.

Remove finisher from centre console,
refer to 51 16 200.

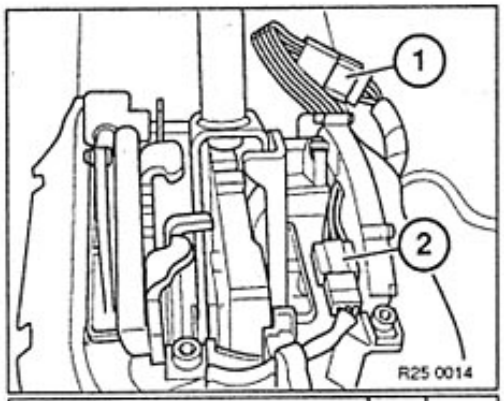

Unfasten cable connectors (1) and (2).

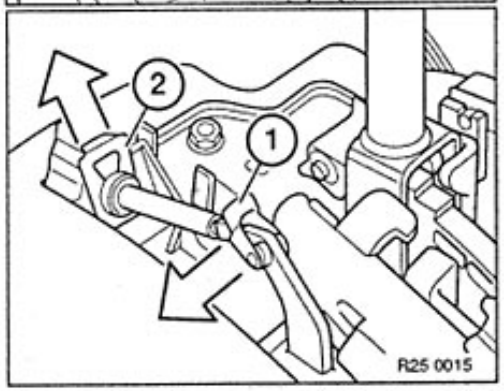

Release pin (1) and remove.
Remove retaining clip (2).
Press cable out of guide.

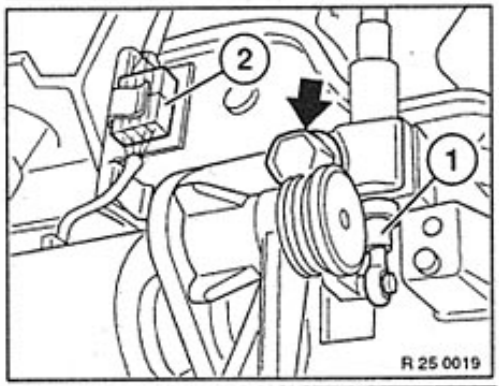

Unfasten screw.
Remove interlock cable.
Unfasten cable connector (2).

Installation:
Adjust interlock cable, refer to 25 16 . .
Repair Instructions for 3 Series E36.

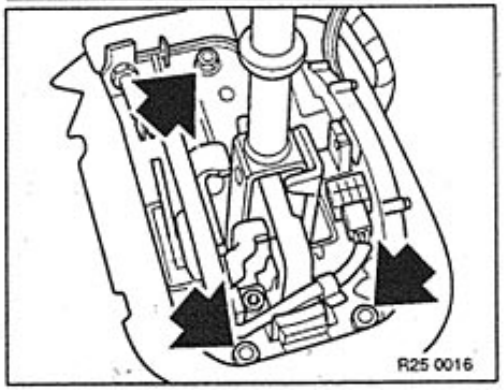

Unfasten screws.

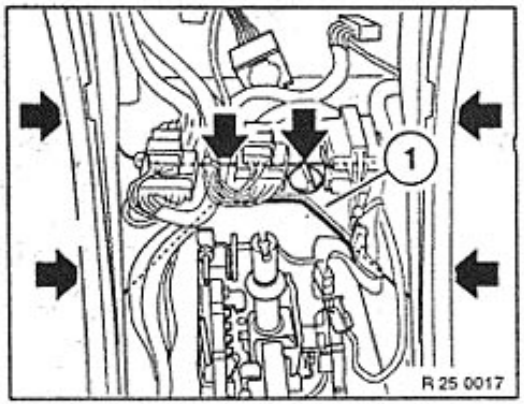

Unfasten screws.
Press reinforcement plate (1) forwards and remove shift tower.

Note:
If necessary, unfasten cable and connector from reinforcement plate.

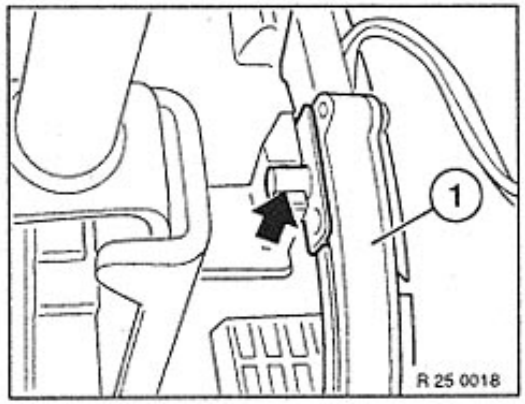

If necessary, fit position switch (1) to new shift tower.

Installation:
Pin in switch must be in recess on shift lever.

25 16 061 Replacing handle on shift lever

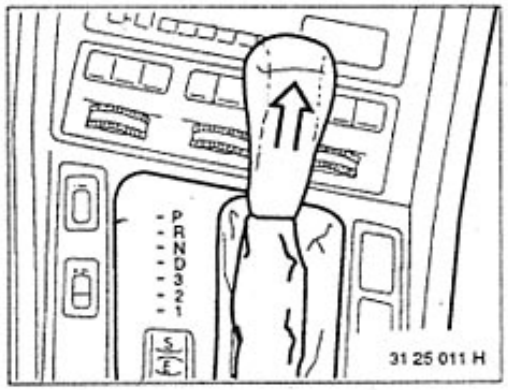

Remove selector lever handle by tugging firmly.

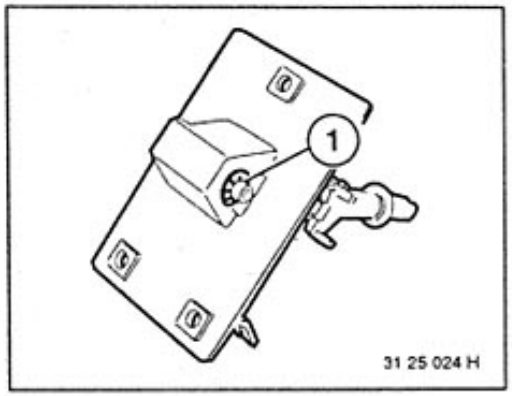

25 16 080 Removing and installing / replacing shift lever

Remove shift tower 25 16 050.
Pry out retainer (1).

Installation:
Replace retainer (1)
Drive out bearing pin.

Installation:
Coat bearing points with Klüber Polylup GLY 801 **.

26 16 130 Removing and installing / replacing shift lock solenoid

Remove finisher from centre console, refer to 51 16 200.

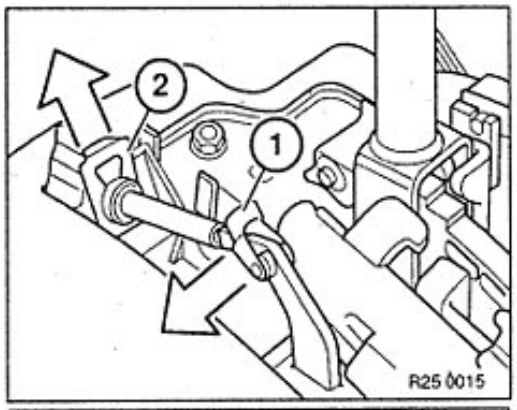

Release pin (1) and remove.
Remove retaining clip (2).
Press cable out of guide.

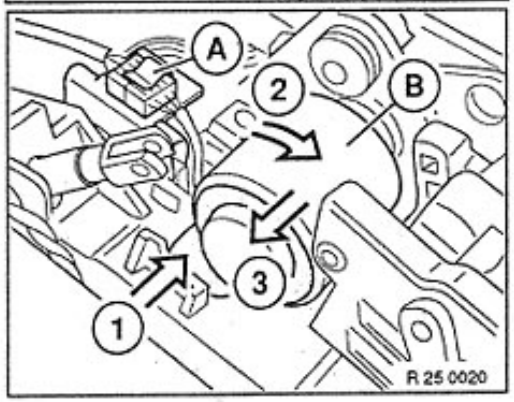

Disconnect cable connector (A).

1. Press locking fixture in direction of arrow.
2. Twist electromagnet (B) approx. 90 ° in direction of arrow.
3. Pull out electromagnet (B) in direction of arrow.

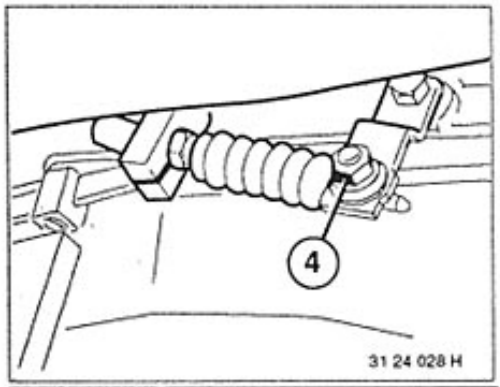

25 16 202 Replacing cable for gear selector lever

Unfasten nut (4) (brace).
Remove cable from support bearing.
Pull out cable.
Tightening torque*

Installation:
Adjust shift mechanism 24 00 006.

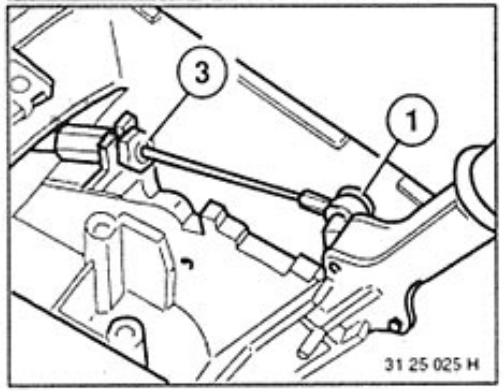

Remove selector lever handle, cover and finisher (refer to 25 16 050)
Press of retainer (1).

Installation:
Replace retainer (1).
Unscrew nut (3).
Disconnect cable.
Tightening torque*

Cut open carpet from above cable and up to rubber seal.
Pull cable upwards to remove.

Installation:
Ensure that rubber seal is perfectly located.

* Refer to Technical Data
** Refer to BMW Parts Service

25 16 202 Replacing cable for gear selector lever (step shift mechanism)

Operation is identical to "Removing and Installing Shift Tower", refer to 25 16 051/ 25 16 056.

26 Propeller shaft

26 11 000 REMOVING AND INSTALLING PROPELLER SHAFT

Remove exhaust assembly – see 18 00 020.
Remove heat shield (1).

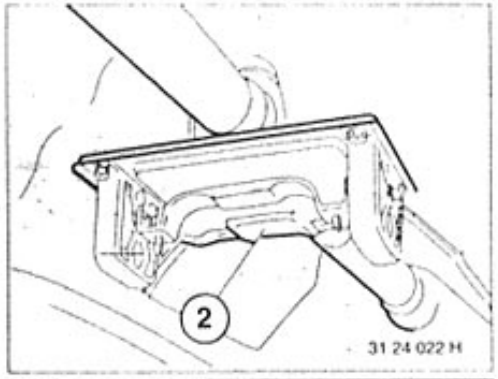

Unscrew exhaust holder (2).

Installation
Tightening torque*.

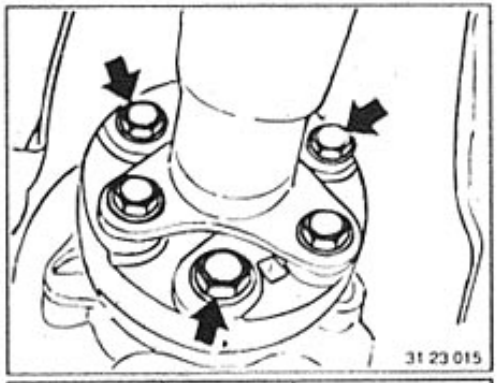

Version with Joint Disc:
Unscrew joint disc on transmission.

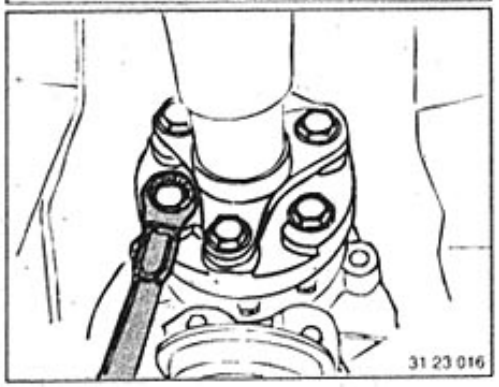

Installation:
Replace stop nuts.
Tighten bolts with specified torque*.

* See Specifications

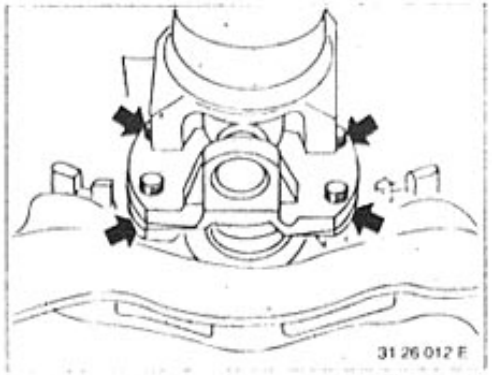

Version with Universal Joint:
Unscrew universal joint on transmission.

Installation
Tightening torque*.

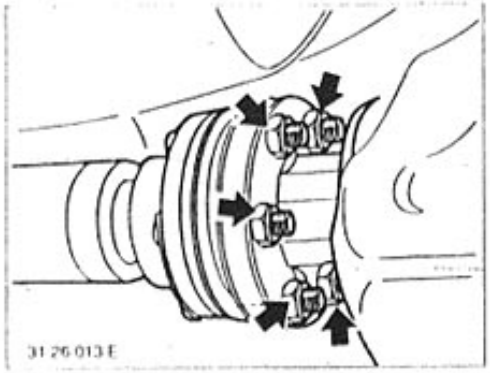

Unscrew constant velocity joint on final drive.

Installation
Replace stop nuts.
Tightening torque*.

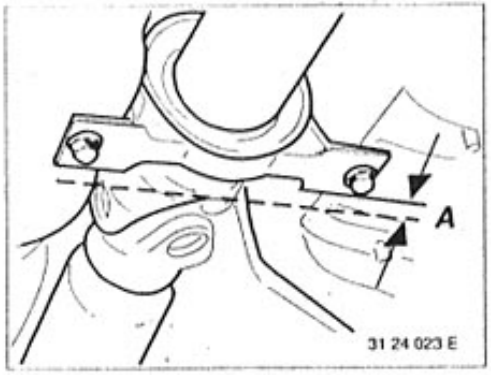

Unscrew center mount.

Installation:
Preload center mount forward by distance A = 2 ... 4 mm (0.079 ... 0.157").
Tightening torque*.

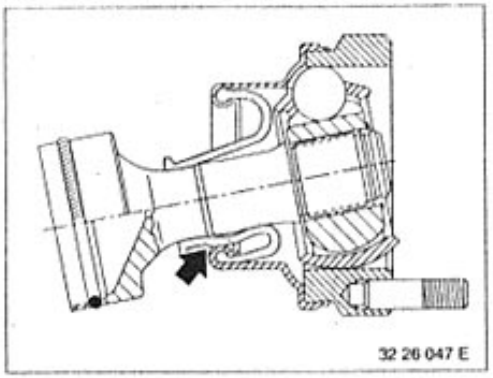

Important!
Never let the propeller shaft fall into the joints. This could lead to damaging the rubber cover of a constant velocity joint in particular or even the joints.

* See Specifications

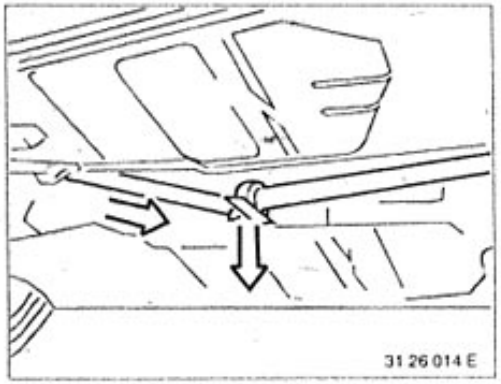

Bend the propeller shaft down on the center mount and pull it off of the centering pin on a manual transmission or constant velocity joint on the final drive.

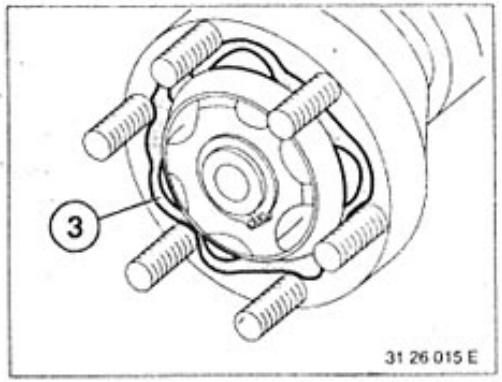

Important!
Check gasket (3).
Inspect gasket (3), replacing if necessary.
The constant velocity joint is not encapsulated, so that the joint must be protected against dirt with a transport cap or similar item.
Check / correct the grease* filling prior to installation.

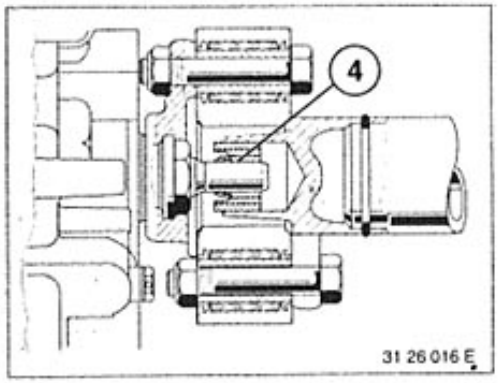

Installation:
Check center (4).
Replace a damaged center.
Coat center with Molykote Longterm 2 prior to installation.

* See Specifications

26 11 030 BALANCING PROPELLER SHAFT (CENTERING AND ADJUSTING DEFLECTION ANGLES)

Vibration or Noise:

Requirements:
Propeller shaft in perfect optical condition.
Balance the propeller shaft if balance plates are missing or there is suspicion of propeller shaft imbalance (refer to operating instructions supplied with the balancing machine).

Important!
Test run a jacked-up car only with supported wheel suspension on the driven wheels (deflection angle of output shaft).
Never exceed the top speed specified for a car in jacked-up state or on a dynamometer test stand.
Conform with safety precautions!

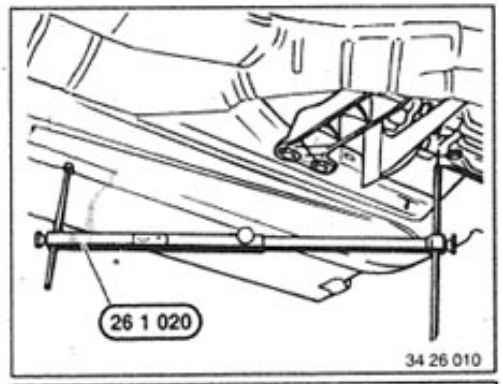

Centering Propeller Shaft:

Loosen exhaust assembly, engine rubber mounts and transmission cross member.
Apply Special Tool 26 1 020.

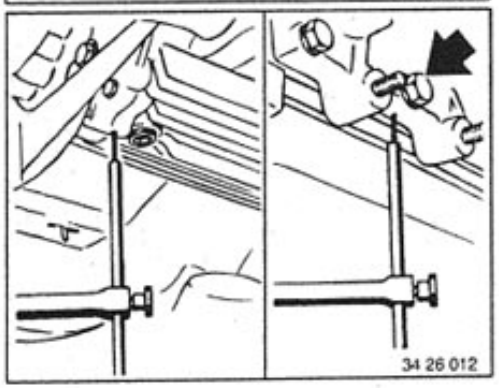

Application Points:
Bore in engine carrier at rear.

Manual Transmission:
– cast rib at center

Automatic Transmission:
– center bolt of transmission extension

Punch mark measuring points.

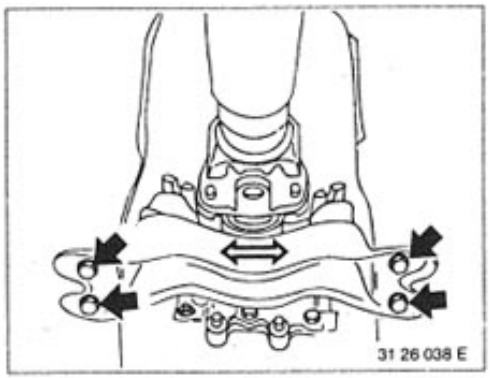

Move transmission sideways until special tool gage shows same distance on the left and right sides.
Mount cross member.
Tightening torque*.

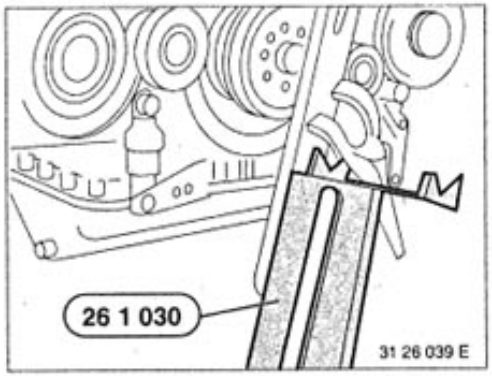

Checking Deflection Angle of Propeller Shaft:

Unscrew splash guard.
Clamp helping rail (steel ruler) on pulley in vertical position with a clamping pliers.
Apply Special Tool 26 1 030 on the helping rail.

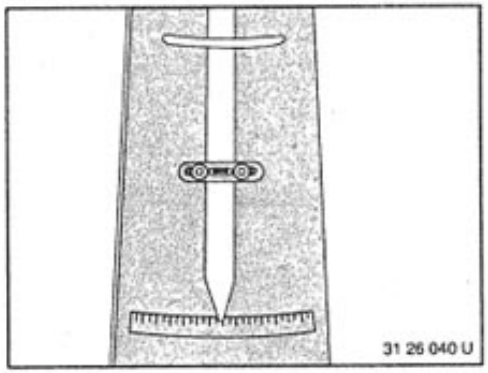

Set the indicator perpendicular with help of the water scale.
Read degrees.

Note:
Always apply the special tool with the scale in the same direction (e.g. scale right).
One graduation = 5'.
The position of the car is not important, since only separate angles are compared.

* See Specifications

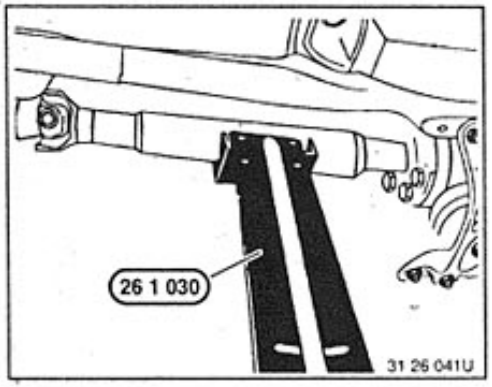

Place special tool on front propeller shaft section and measure the angle. Determine deflection angle* of joint coupling and, if necessary, correct by installing max. 3 mm (0.118") thick shims on transmission suspension or on center mount.

Example:

Engine angle	2° 16'
Propeller shaft angle	– 2° 06'
Joint coupling defl. angle	+ 0° 10'

Note:
When correcting deflection angles by installing shims, remember that this will change the deflection angle of neighboring joints. In general a small as possible deflection angle on joints would be ideal.

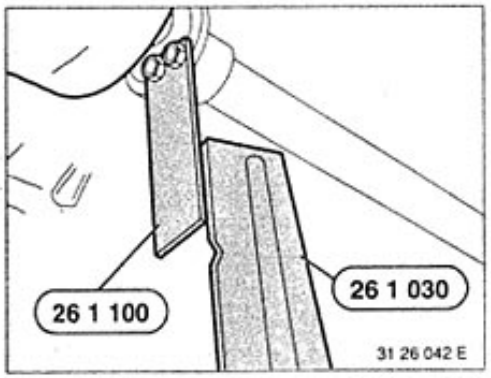

Unscrew two nuts on constant velocity joint.
Mount Special Tool 26 1 100 on constant velocity joint.
Place Special Tool 26 1 030 on Special Tool 26 1 100.
Measure the deflection angle*.

Installation:
Replace stop nuts.
Tightening torque*.

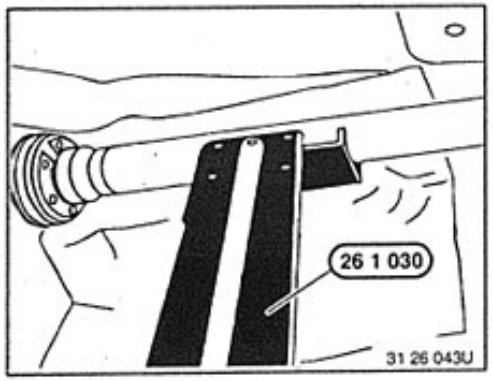

Place special tool on rear propeller shaft section and measure the angle. Determine deflection angle* of center mount and, if necessary, correct by installing max. 3 mm (0.118") thick shims on the transmission suspension or center mount.

* See Specifications

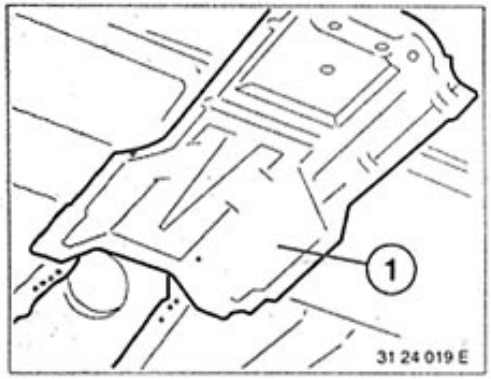

26 11 051 REPLACING JOINT DISC FOR FRONT END OF PROPELLER SHAFT

Remove exhaust assembly – see 18 00 020.
Remove heat shield (1).

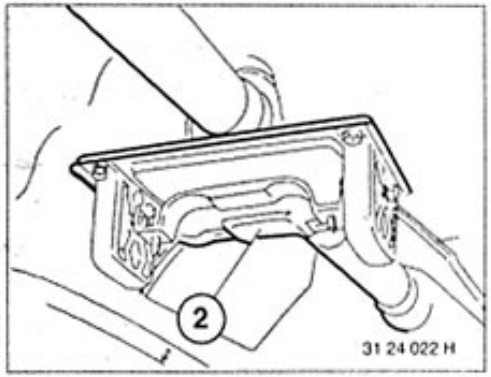

Unscrew exhaust holder (2).

Installation:
Tightening torque*.

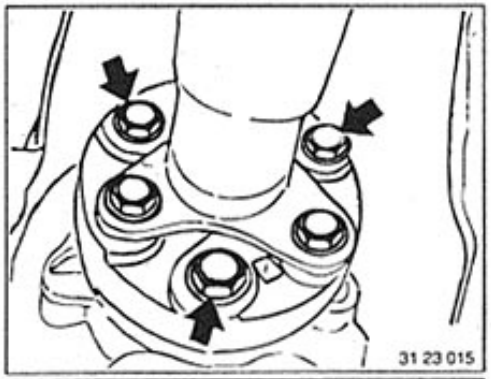

Unscrew joint disc on transmission.

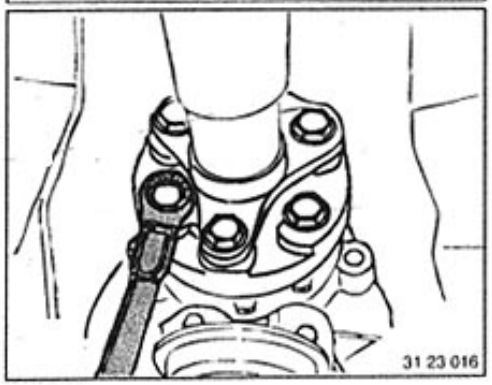

Installation:
Replace stop nuts.
Tighten bolts with specified torque*.

* See Specifications

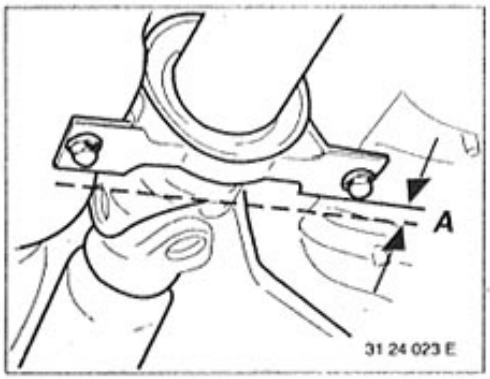

Unscrew center mount.

Installation:
Preload center mount forward by distance A = 2 ... 4 mm (0.079 ... 0.157"). Tightening torque*.

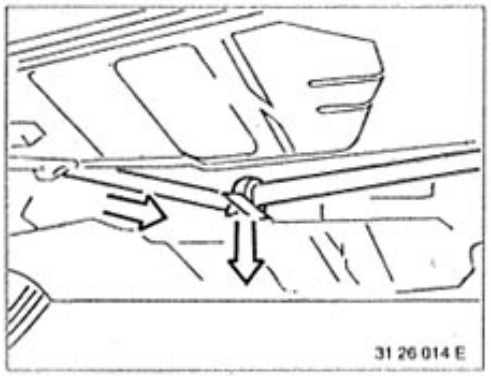

Bend propeller shaft down at the center mount and pull it off of the centering pin on a manual transmission.

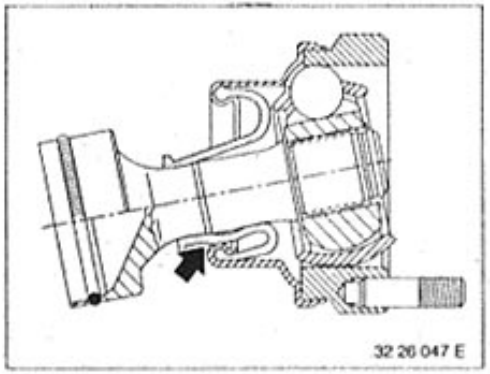

Important!
Never let the propeller shaft fall into the joints. This would lead to damaging the rubber cover of a constant velocity joint in particular.

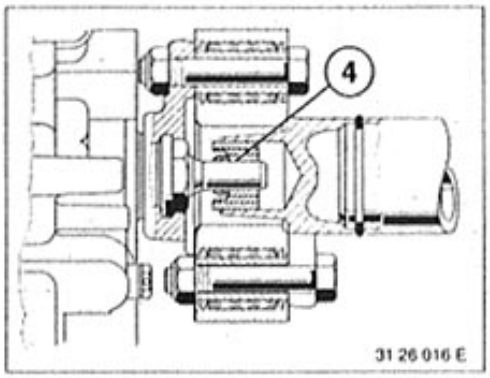

Installation:
Check center (4).
Replace a damaged center.
Coat the center with Molykote Longterm 2 prior to installation.

See Specifications

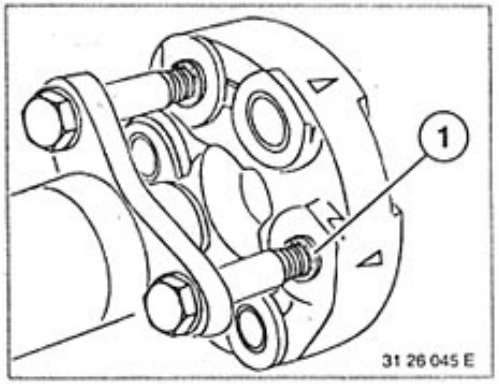

Replace joint disc.

Important!
The joint disc must be installed that the arrows or embossment (1) on the sleeve face the flange arms.
Tightening torque*.

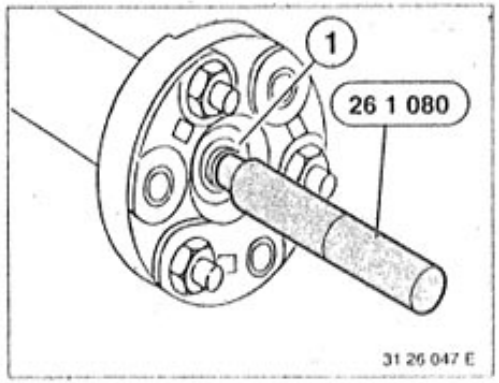

26 11 090 REMOVING AND INSTALLING OR REPLACING CENTER FOR PROPELLER SHAFT

Unscrew propeller shaft at transmission and center mount - refer to 26 11 000.
After unscrewing, suspend front end of propeller shaft from car on a piece of wire and bolt propeller shaft to center mount.
Fill center with viscous grease and drive out using Special Tool 26 1 080.
Pressure on the grease filling will force out center bearing (1).

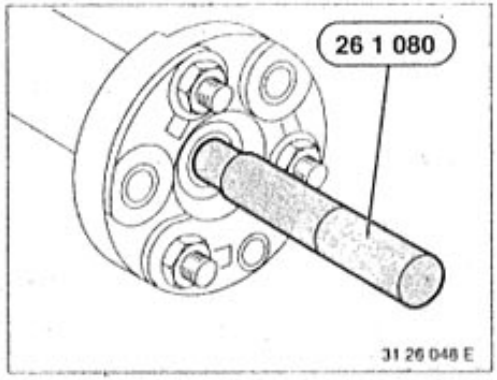

Lubricate center with Molykote Longterm 2** and drive it in using Special Tool 26 1 080.
The sealing lip faces out.

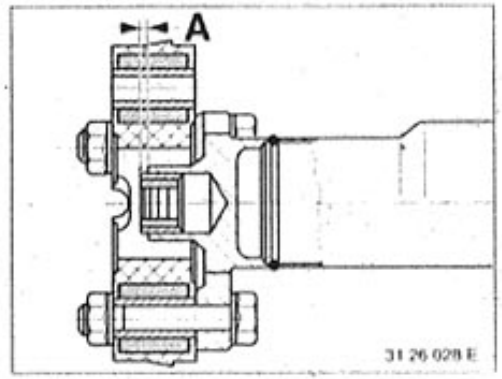

Protrusion A = 4.2 mm.

* Refer to Specifications

** Source of Supply: BMW Parts

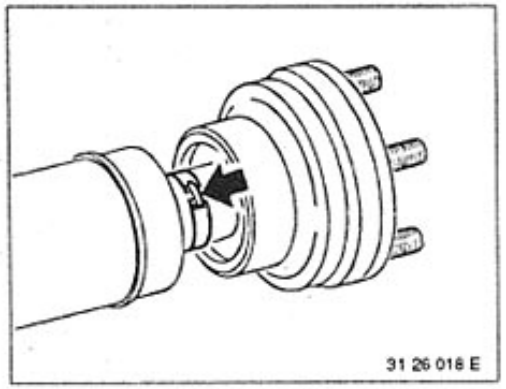

26 11 160 REPLACING CONSTANT VELOCITY JOINT FOR PROPELLER SHAFT

Remove propeller shaft - refer to 26 11 000.
Remove hose clamp.

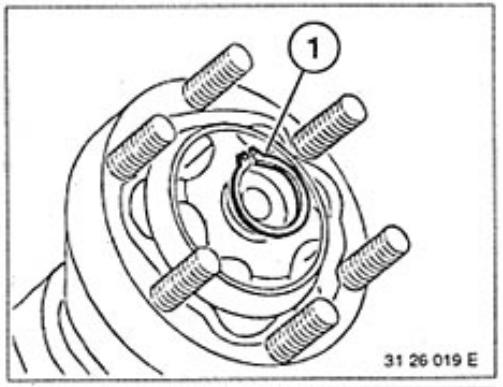

Lift out circlip (1).

Installation:
Replace circlip.

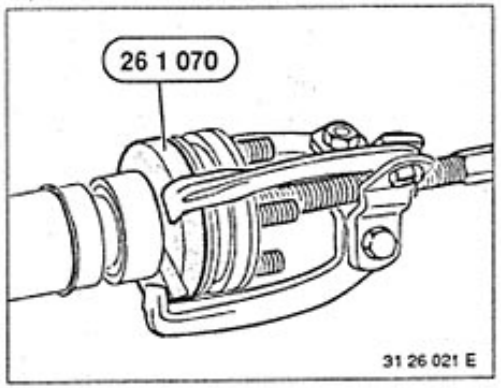

Push back cover.
Apply Special Tool 26 1 070.
Pull off constant velocity joint using a standard puller.

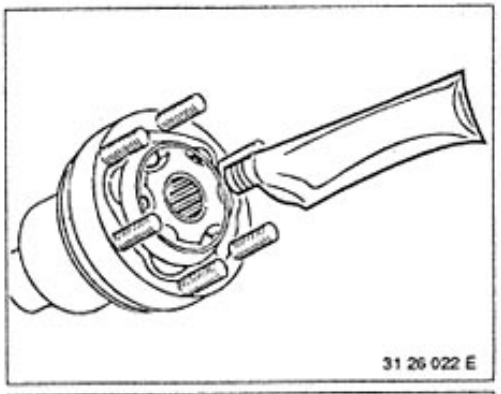

Fill new constant velocity joint with 80 grams of grease.**

Note:
Don't cant the inner race with the cage as the balls would fall out.

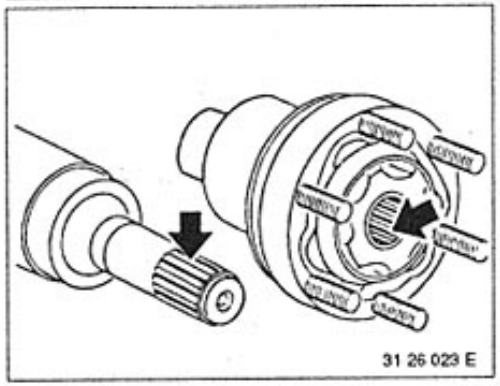

Clean splines to remove grease and then apply a coat of bolt cement.**

Important!
Keep bolt cement out of the ball grooves.

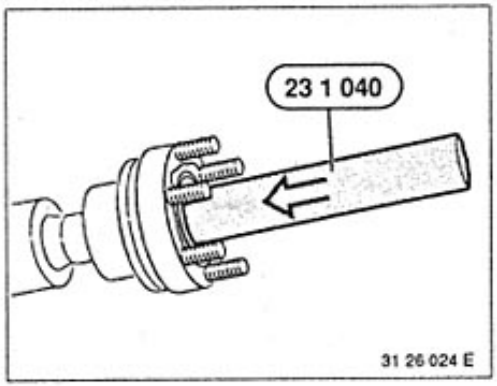

Knock constant velocity joint on to the propeller shaft using Special Tool 23 1 040.

** Source of Supply: BMW Parts

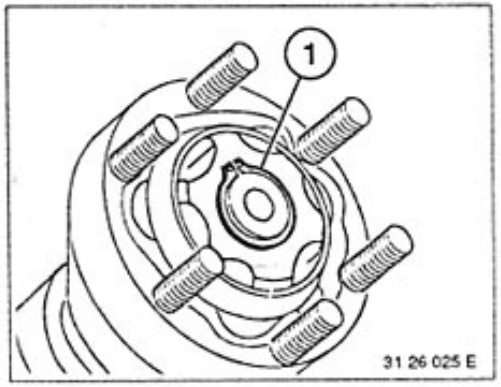

Install circlip (1).

Note:
Check for correct and tight fit.

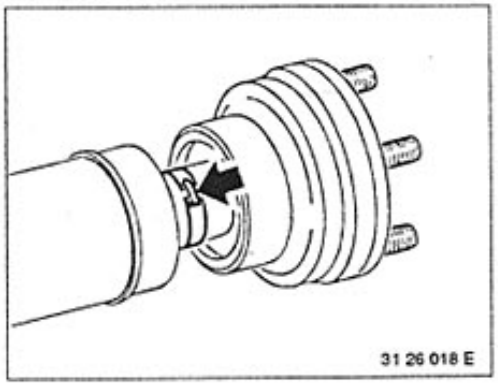

Pull dust cover on to propeller shaft.
Install and tighten hose clamp on the dust cover.

CONSTANT VELOCITY JOINT

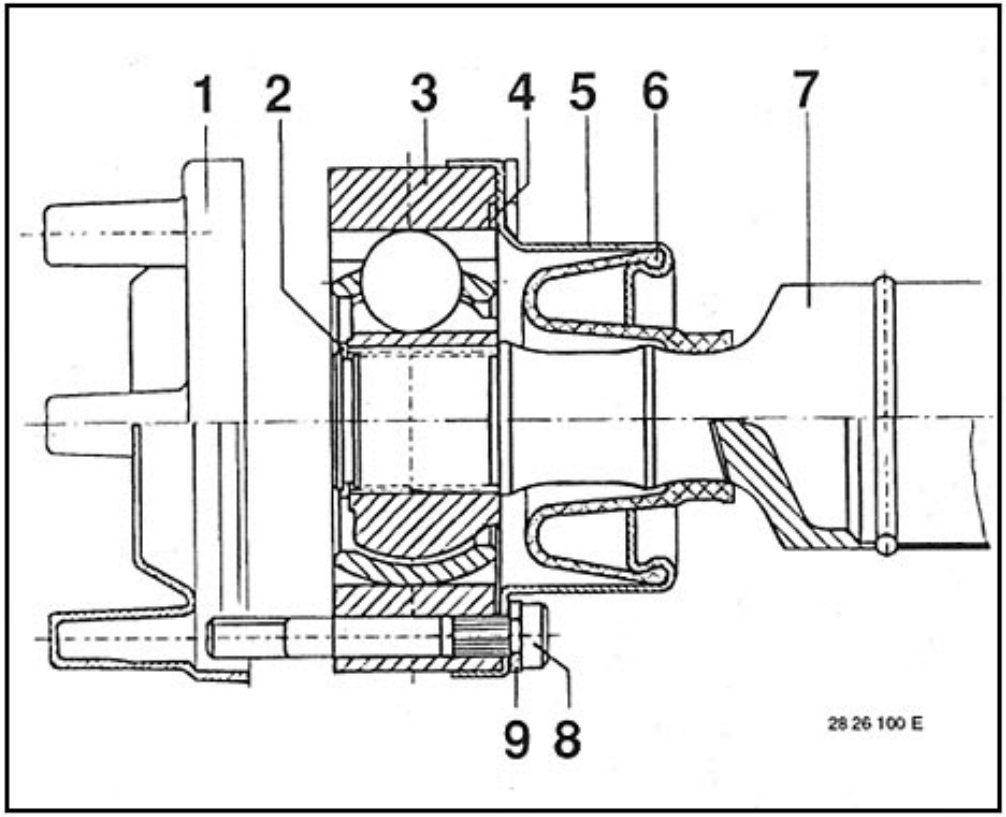

1 Transport cap
2 Circlip
3 Constant velocity joint
4 Gasket
5 End cover
6 Dust cover
7 Propeller shaft
8 Bolt
9 Washer

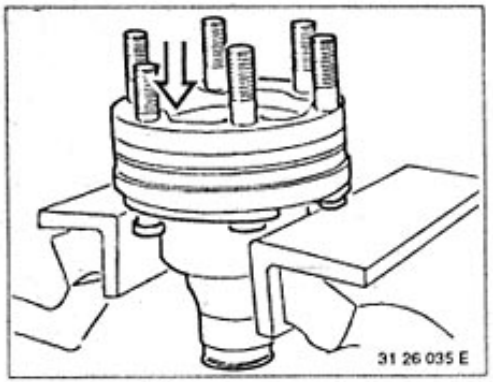

26 11 665 REPLACING DUST COVER
- Constant Velocity Joint Removed -

Knock out fillister head bolts using a plastic hammer.
Remove washers.

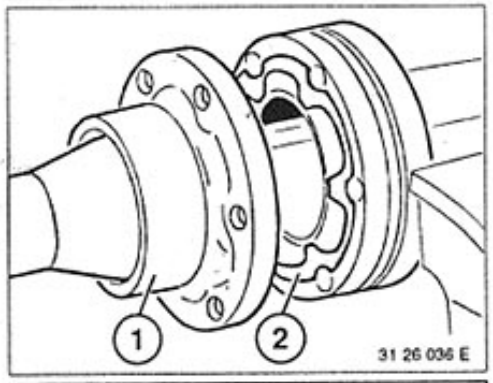

Pull or knock off end cover (1).
Check gasket (2) between constant velocity joint and end cover.
Check / correct grease filling*.

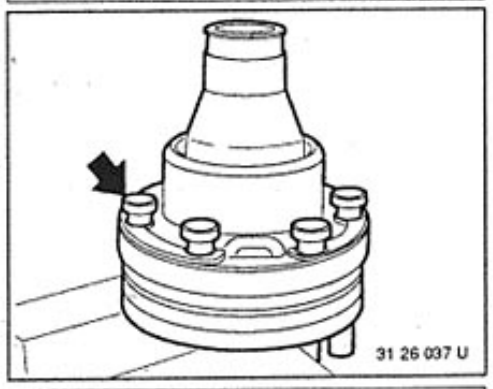

Mount new end cover with dust cover on propeller shaft or constant velocity joint.
Install washers and fillister head bolts.
Knock in fillister head bolts to fit tight using a plastic hammer.

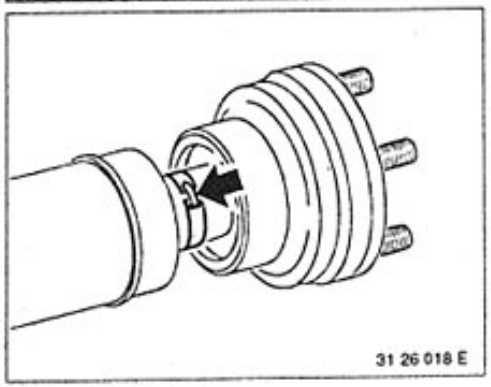

Pull dust cover onto propeller shaft.
Install and tighten hose clamp on dust cover.

* Refer to Specifications

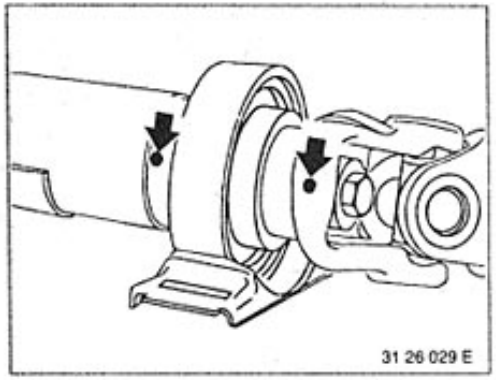

26 12 001 REPLACING PROPELLER SHAFT CENTER MOUNT ASSEMBLY

Remove propeller shaft – see 26 11 000.
Mark position of front propeller shaft section to rear propeller shaft section.

Important!
Propeller shaft was balanced in assembled state so that propeller shaft sections must not be turn when installed.

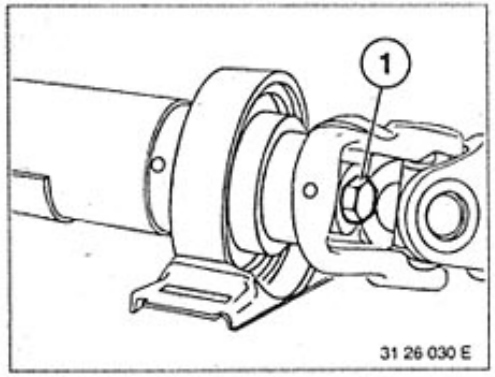

Unscrew bolt (1).
Pull off front propeller shaft section.

Installation:
Assemble propeller shaft that punch marks are opposite each other.
Lock bolt (1) with a bolt cement**.
Tightening torque*.

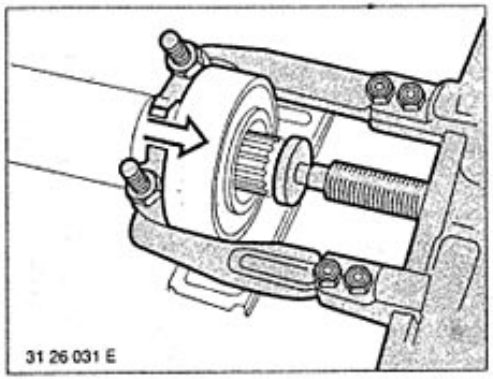

Pull off center mount complete with the grooved ball bearing, using a standard puller.

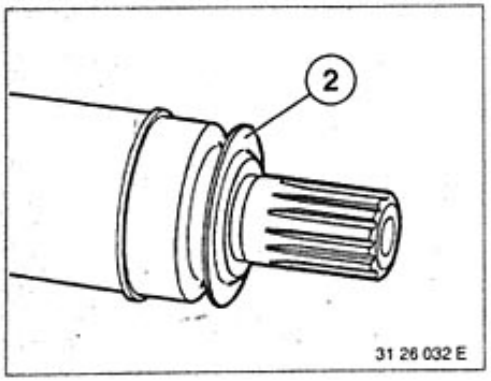

Installation:
Check installed direction of dust cover (2).

* See Specifications
** Source of Supply: HWB

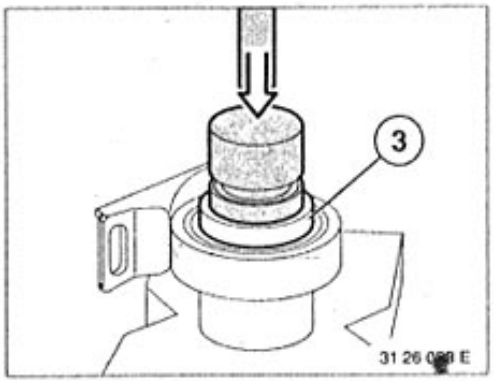

Press grooved ball bearing (3) into center mount.

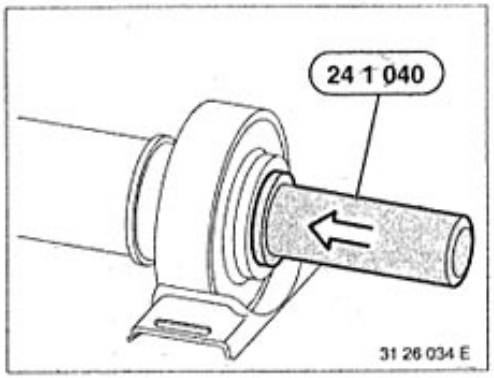

Knock in center mount bearing with Special Tool 24 1 040.

Important!
Check for free movement of the center mount bearing.

26 12 011 REPLACING GROOVED BALL BEARING IN PROPELLER SHAFT CENTER MOUNT

Contained in "Replacing Propeller Shaft Center Mount Assembly" – see 26 12 001.

26 12 500 CHECKING PRELOAD OF PROPELLER SHAFT CENTER MOUNT

Contained in "Removing and Installing Propeller Shaft" – see 26 11 000.

TROUBLESHOOTING PROPELLER SHAFT

Condition	Cause	Correction
Drumming noise from non-moving car	a) Propeller shaft without influence.	a) Check engine tuning, remove tension in exhaust assembly.
Vibration when moving off in forward or reverse (center mount knocks through)	a) Propeller shaft not aligned precisely.	a) Align propeller shaft – see 26 00 030.
	b) Runout on centering pin, transmission or final drive flanges.	b) Check runout* of centering pin and flanges with a dial gage. Align/replace final drive flange.
	c) Center mount rubber damaged.	c) Replace center mount – see 26 12 011.
	d) Universal joint worn or seized.	d) Check clearance and movement, replacing propeller shaft if necessary – see 26 11 000.
	e) Engine/transmission suspension not okay.	e) Check and align or replace mounts.
	f) Joint disc rubber damaged.	f) Replace joint disc – see 26 11 051.
Vibration at 40 ... 50 km/h (25 ... 30 mph)	a) Propeller shaft not aligned precisely.	a) Align propeller shaft – see 26 00 030.
	b) Runout on centering pin, transmission or final drive flanges.	b) Check runout* of centering pin and flanges with a dial gage. Align/replace final drive flange.
	c) Center mount rubber damaged.	c) Replace center mount – see 26 12 011.
	d) Universal joints worn or seized.	d) Check clearance and movement, replacing propeller shaft if necessary – see 26 11 000.
	e) Joint disc rubber damaged.	e) Replace joint disc – see 26 11 051.

* See Specifications

TROUBLESHOOTING PROPELLER SHAFT

Condition	Cause	Correction
Drumming noise from 60 km/h (35 mph) on	a) Propeller shaft not aligned precisely or installed with tension.	a) Align propeller shaft – see 26 00 030.
	b) Center bearing damaged.	b) Replace center – see 26 11 501.
	c) Runout on centering pin, transmission or final drive flanges.	c) Check runout* of centering pin and flanges with a dial gage. Align/replace final drive flange.
	d) Offcenter due to worn flange bores (loose bolts).	d) Replace transmission or final drive flange.
	e) Excessive propeller shaft imbalance; balance plates missing.	e) Check clearance and movement, replacing propeller shaft if necessary – see 26 11 000.
	f) Universal joints worn or seized.	f) Check clearance and movement, replacing propeller shaft if necessary – see 26 11 000.
Center mount loud while operating car	a) Center mount not perpendicular to propeller shaft; no or insufficient preload	a) Align center mount to be perpendicular to propeller shaft; preload forward by 2 ... 4 mm (0.079 ... 0.157").
	b) Center mount grooved ball bearing not okay.	b) Replace grooved ball bearing – see 26 12 011.

* See Specifications

31 Front axle

FRONT AXLE LAYOUT DRAWING

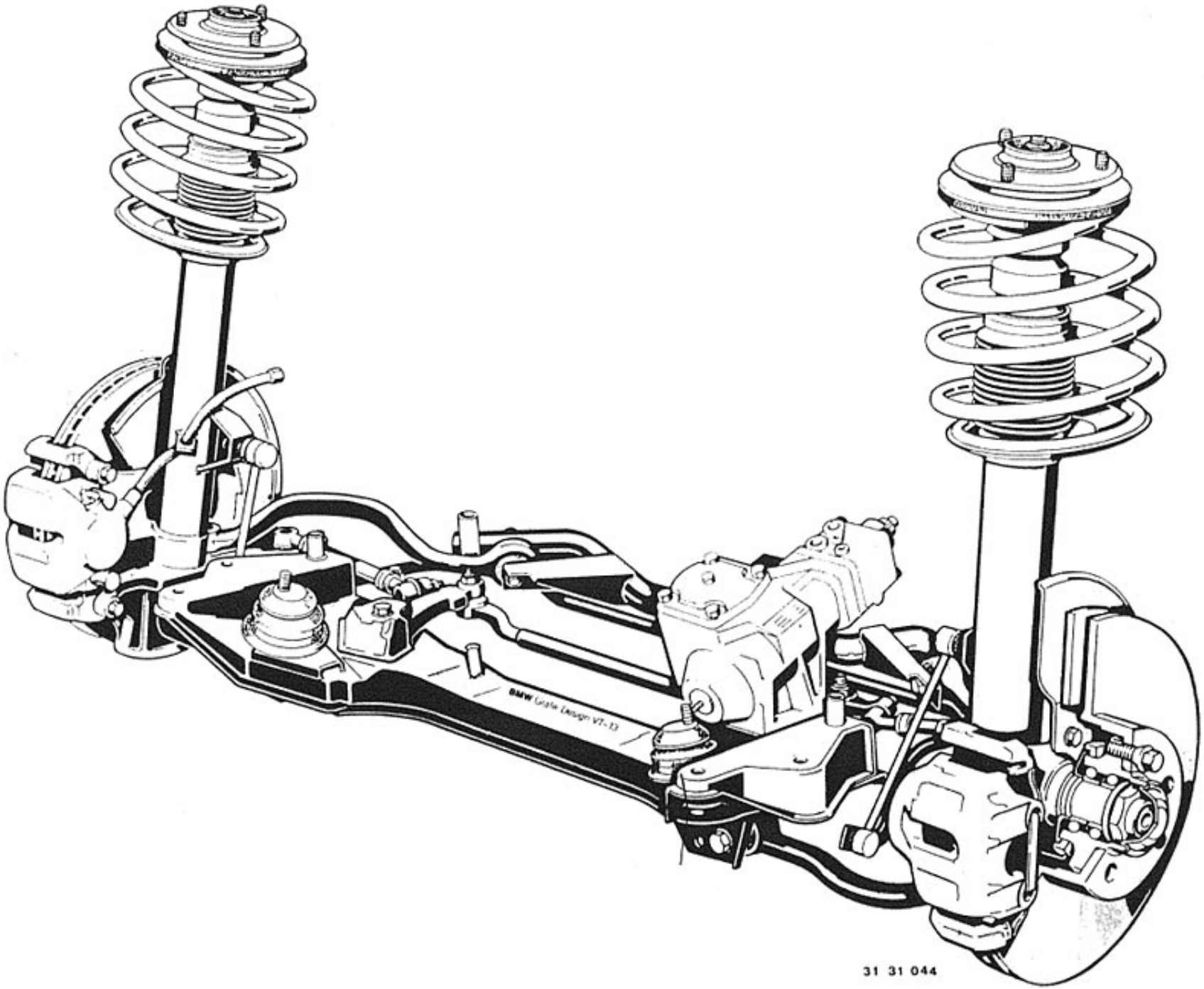

LAYOUT DRAWING OF STRUTS AND ARMS

1 Thrust strut
2 Tie rod arm
3 Control arm
4 Support
5 Connecting pipe

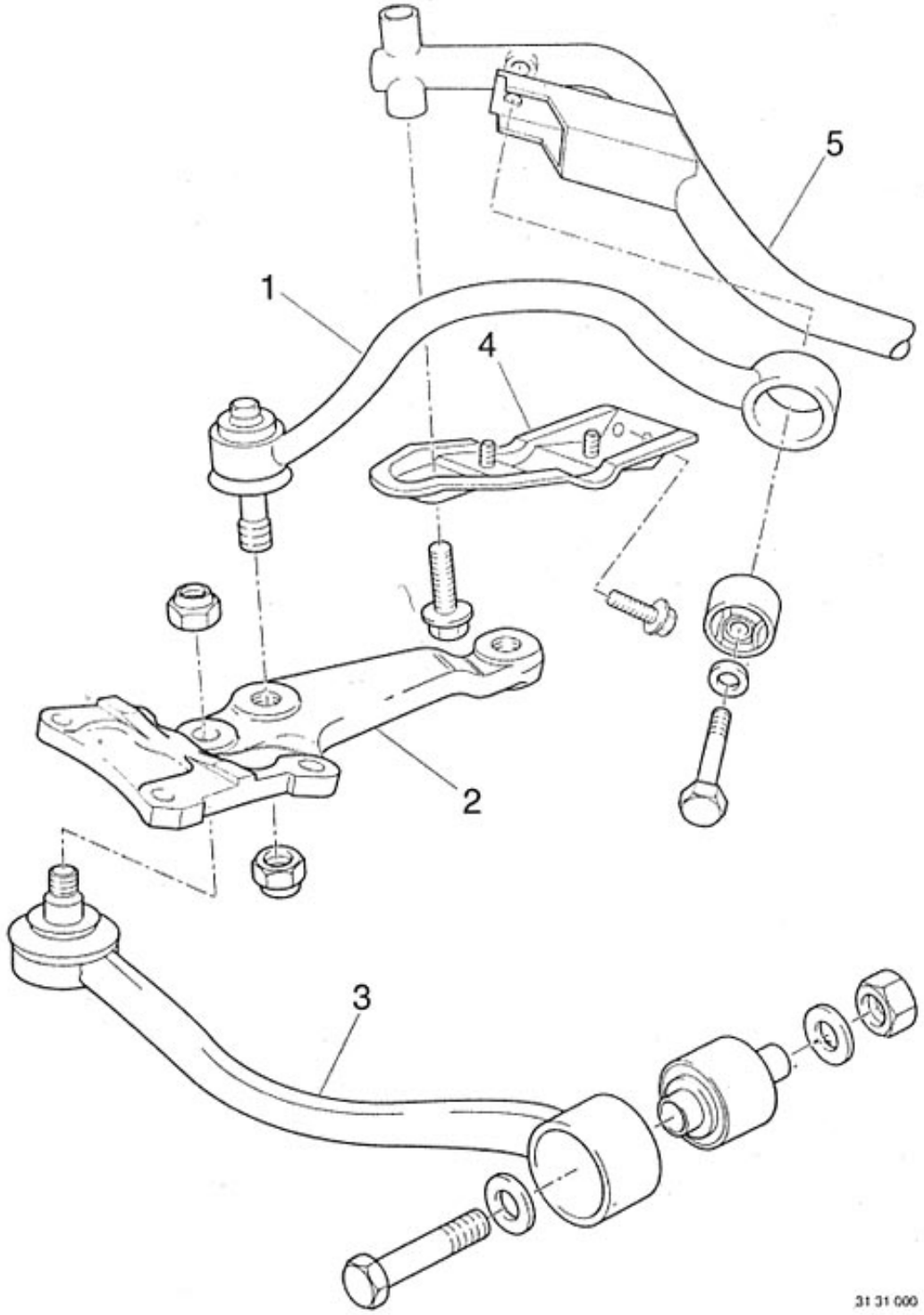

LAYOUT DRAWING OF STRUTS AND ARMS (Version with Reinforcement Cross)

1 Reinforcement cross
2 Thrust strut
3 Tie rod arm
4 Control arm

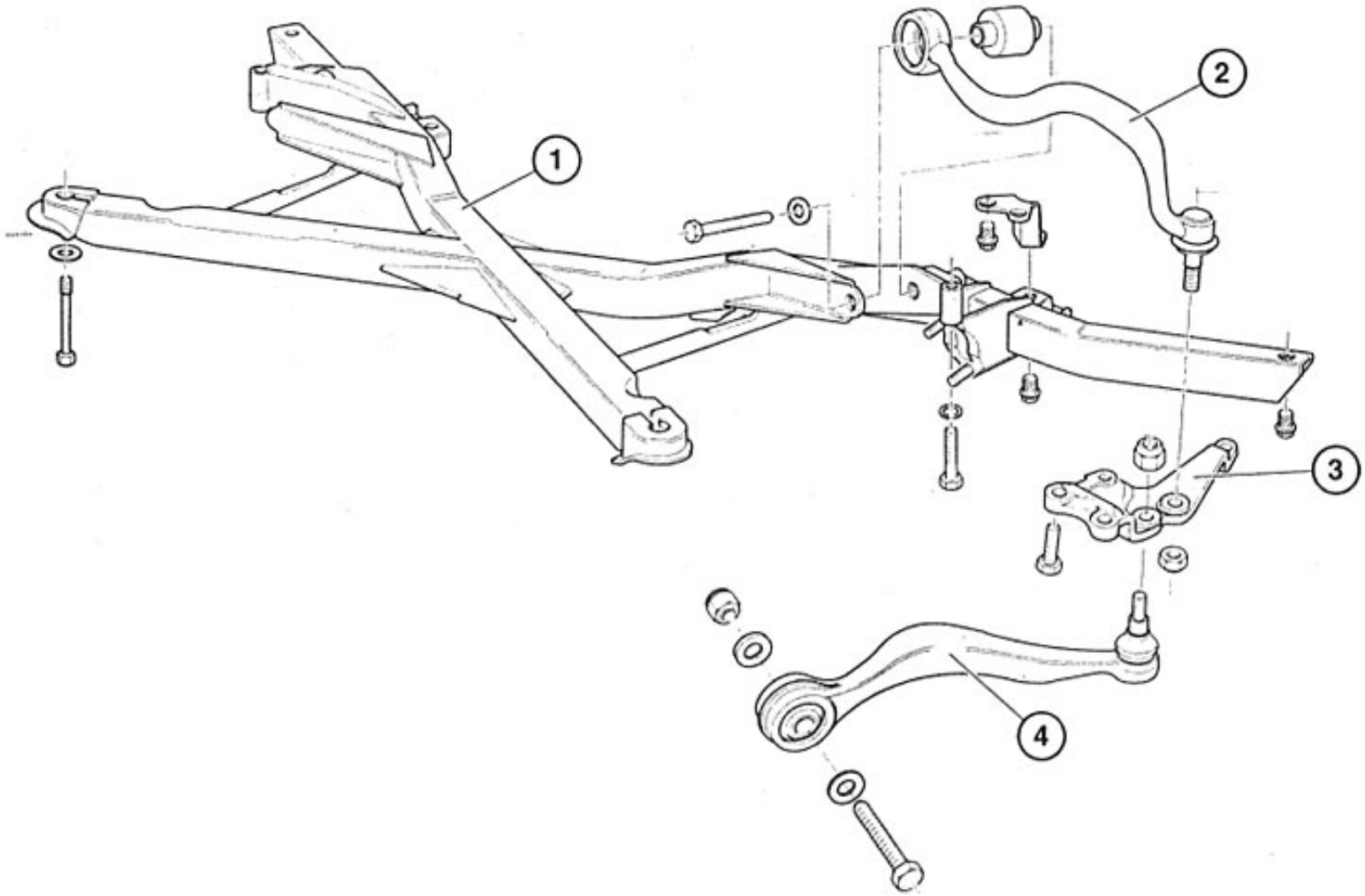

31 31 054

31 10 000 REMOVING AND INSTALLING FRONT AXLE ASSEMBLY

Unscrew brake calipers (pipes remain connected) - refer to Group 34.
Unscrew ABS pulse senders - refer to Group 34.
Disconnect EDC wire - refer to Group 37.

Note:
Check and adjust wheel alignment after installation of the front axle - refer to Group 32.

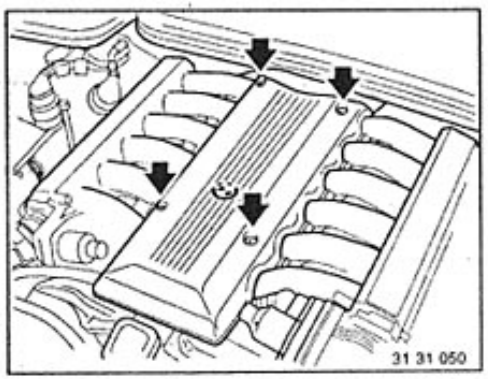

Unscrew cover.

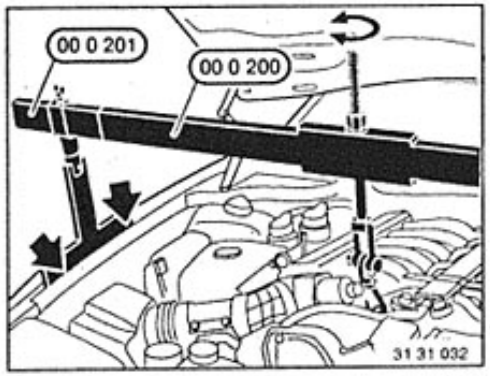

Suspend engine from Special Tools 00 0 200 and 00 0 201.
Supports must bear on the bolts of both side panels.

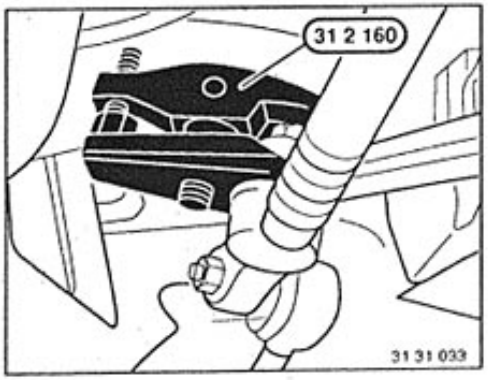

Unscrew nut.
Press tie rod off of the steering drop arm using Special Tool 31 2 160.

Installation:
Replace self-locking nut.
Tightening torque*.

* Refer to Specifications

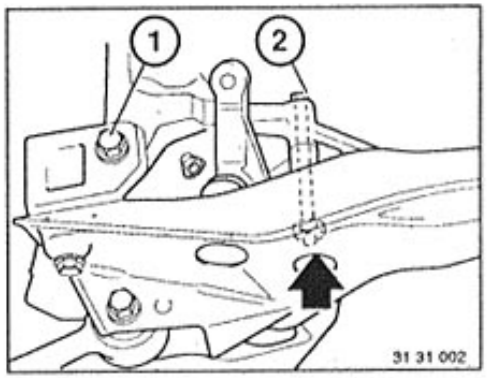

Unscrew bolts (1 and 2).
Suspend steering gear from car — pipes remain connected.

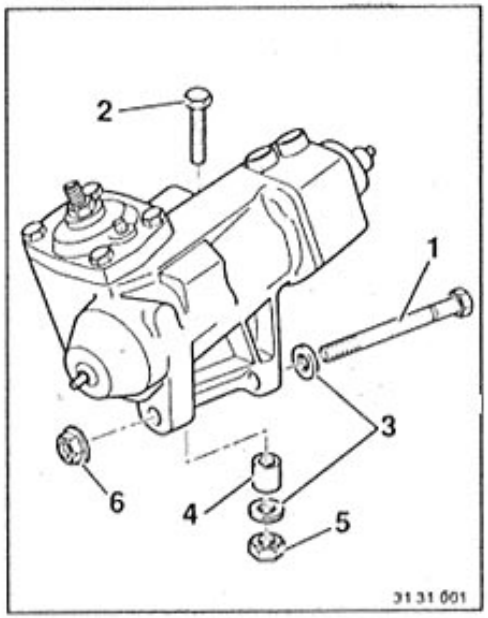

Installation:
1 Bolt
2 Bolt (only use 10.9 strength class)
3 Washer
4 Sleeve
5 Nut (replace)
6 Nut with washer (replace)

Tightening torque*.

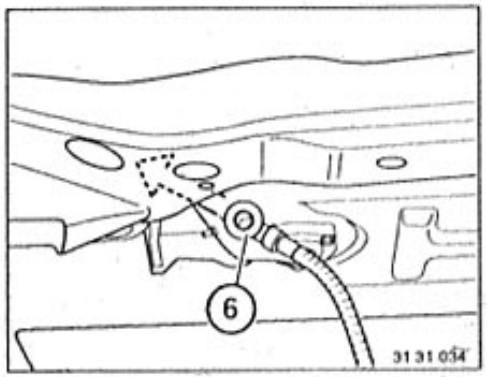

Installation:
Install nut (6) using a flexible magnetic lifter.

* Refer to Specifications

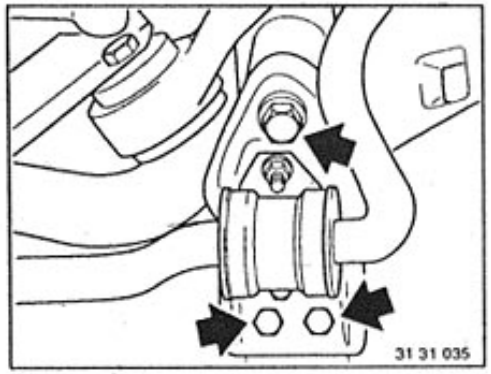

Unscrew left and right bolts.

Installation:
Tightening torque*.

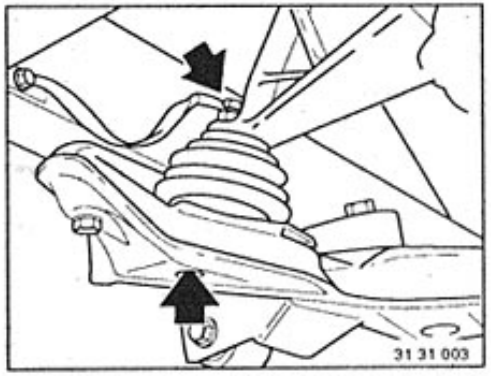

Unscrew left and right engine mounts on front axle.
Also unscrew right engine mount at top.

Installation:
Tightening torque*.

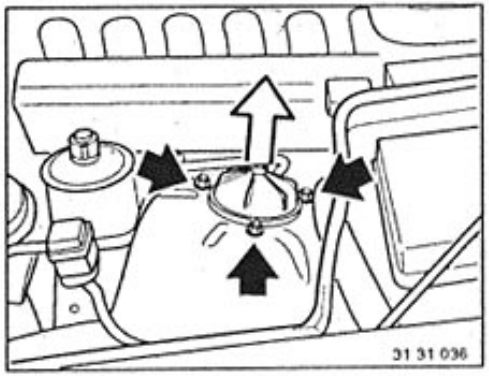

Take off cap.
Unscrew left and right nuts.

Installation:
Replace self-locking nuts.
Tightening torque*.

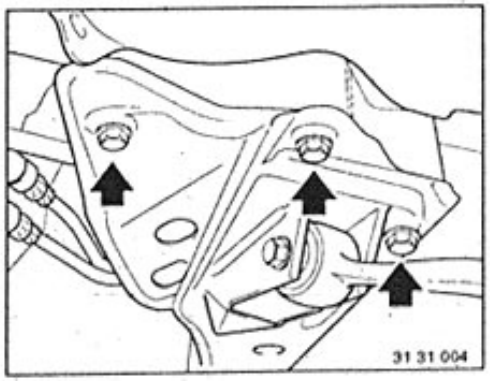

Place garage jack underneath front axle carrier.
Unscrew left and right bolts and lower the front axle slowly.

Important!
Spring struts must not fall out or down – this would damage the ball joints.

Installation:
Tightening torque*.

* See Specifications

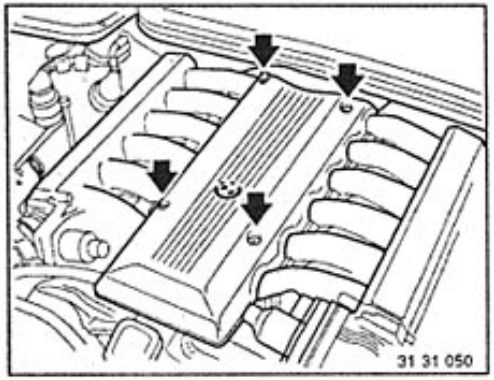

31 11 001 REPLACING FRONT AXLE CARRIER

Note:
The steering drop arm must be adjusted (refer to Group 32) after installation of a new front axle carrier.
Check and adjust wheel alignment after installation of the front axle - refer to Group 32.

Unscrew cover.

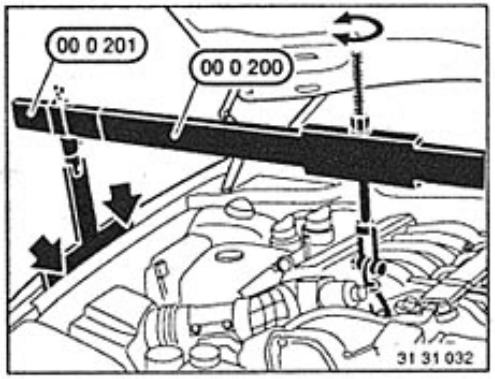

Suspend engine from Special Tools 00 0 200 and 00 0 201.
Supports must bear on the bolts of both side panels.

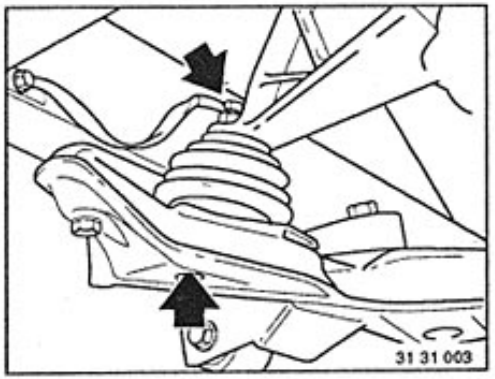

Unscrew left and right engine mounts at the front axle carrier.
Also unscrew right engine mount at top.

Installation:
Tightening torque*.

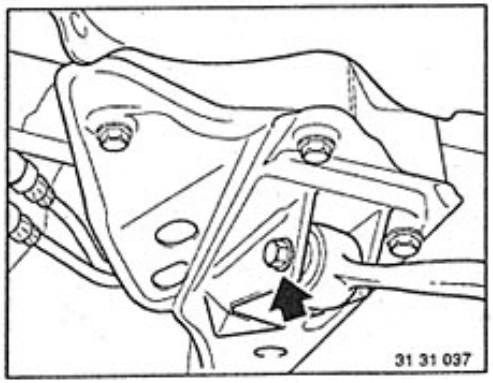

Unscrew left and right control arms.

Installation:
Replace self-locking nuts.
Use washers on both sides.
Tightening torque*.

* Refer to Specifications

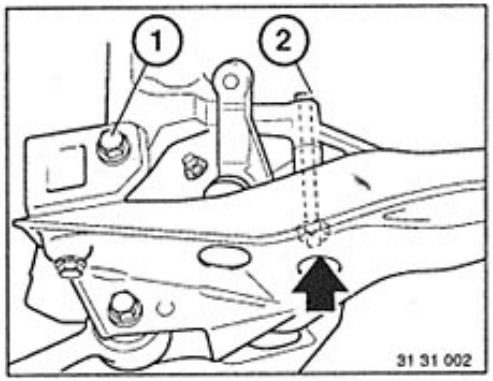

Unscrew bolts (1 and 2).
Suspend steering gear from car — pipes remain connected.

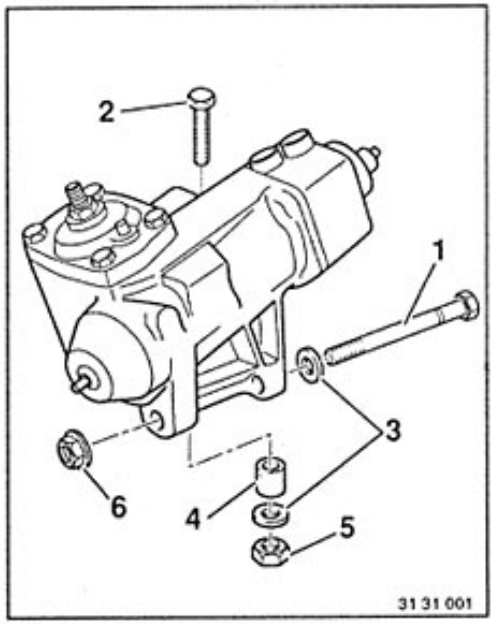

Installation:
1 Bolt
2 Bolt (only use 10.9 strength class)
3 Washer
4 Sleeve
5 Nut (replace)
6 Nut with washer (replace)

Tightening torque*.

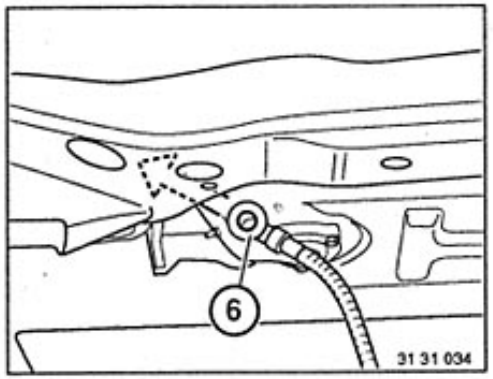

Installation:
Install nut (6) using a flexible magnetic lifter.

* Refer to Specifications

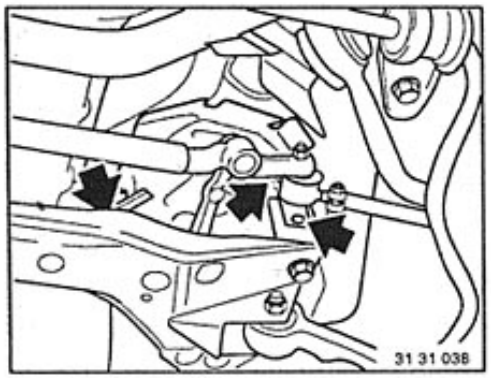

Unscrew heat shield.

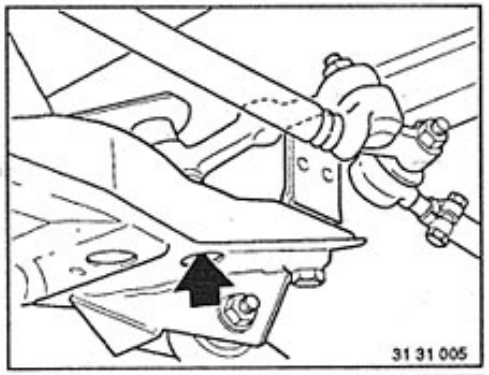

Unscrew steering guide arm.

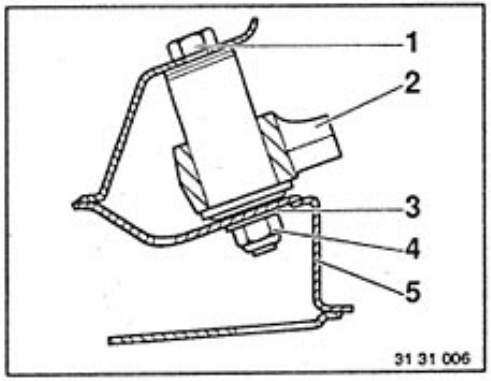

Installation:

1 Bolt
2 Steering guide arm
3 Washer
4 Self-locking nut
5 Front axle carrier

Replace self-locking nut.
Tightening torque*.

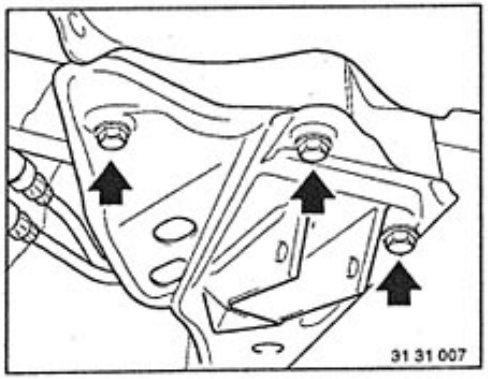

Unscrew left and right bolts and take off front axle carrier.

Installation:
Tightening torque*.

* See Specifications

31 12 001 REPLACING LEFT OR RIGHT CONTROL ARM

Remove front wheel - refer to Group 36.

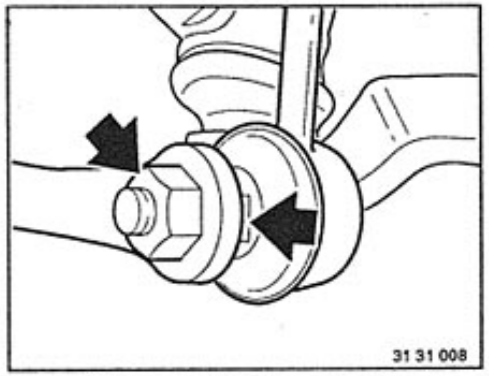

Unscrew thrust rod at stabilizer, while counterholding with a fork wrench.

Installation:
Wrench surface on ball head must be parallel to the absorber axis.
Tightening torque*.

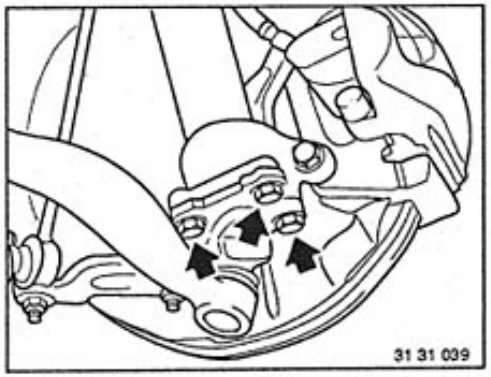

Unscrew bolts.

Installation:
Clean threads of bores and bolts.
Install bolts with bolt cement**.
Tightening torque*.

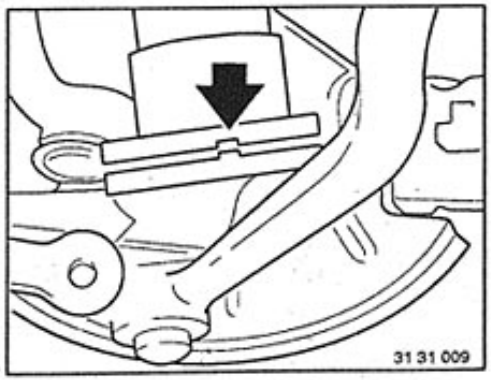

Check for correct installed position.

* Refer to Specifications
** Source of Supply: BMW Parts

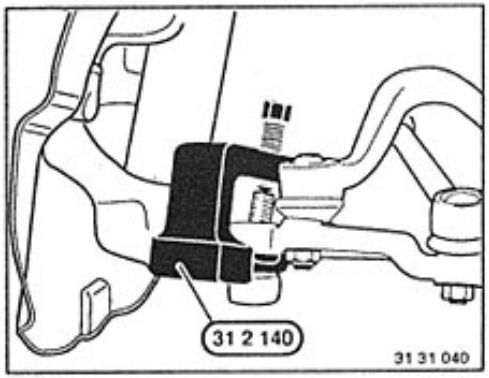

Unscrew nut.
Pry off ball joint using Special Tool 31 2 140.

Installation:
Remove grease from ball pin and bore.
Replace self-locking nut.
Tightening torque*.

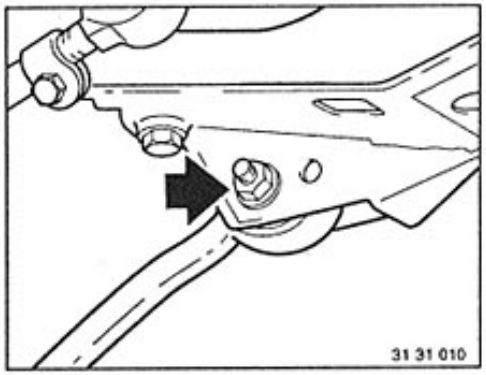

Unscrew bolt.

Installation:
Use washers on both sides.
Replace self-locking nut.
Tightening torque*.

* Refer to Specifications

31 12 090 REMOVING AND INSTALLING OR REPLACING LEFT OR RIGHT THRUST STRUT

Remove front wheel – see Group 36.

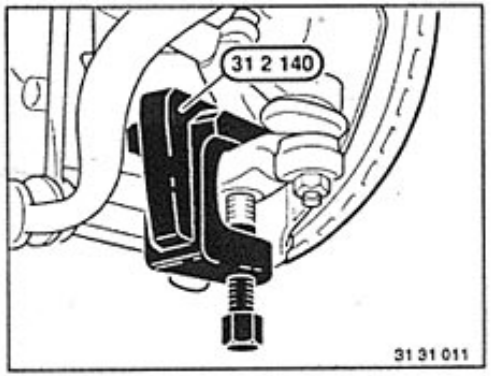

Unscrew nut.
Pry off ball joint with Special Tool 31 2 140.

Installation:
Remove grease from ball pin and bore.
Replace self-locking nut.
Tightening torque*.

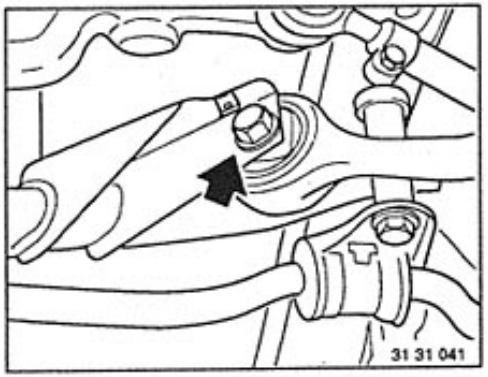

Unscrew heat shield if necessary.
Unscrew thrust strut.

Installation:
Use washer.
Replace self-locking nut.
Tightening torque* for car in normal position*.

Important!
Thrust strut mounts must always be installed or replaced in pairs.

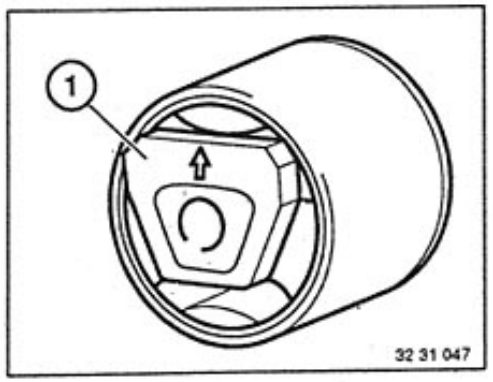

Note:
Hydraulic thrust strut mounts – recognized on plastic clip (1) – cannot be checked.
Both mounts must be replaced is fluid is running out of a hydraulic mount.

* See Specifications

31 12 147 REPLACING THRUST STRUT RUBBER MOUNTS

Always replace both mounts!

Remove thrust strut – see 31 12 090.

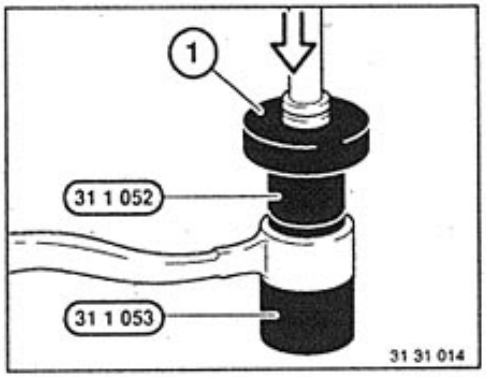

Press rubber mounts out (and in) on a press with Special Tools 31 1 052 / 053 and thrust pad (1).

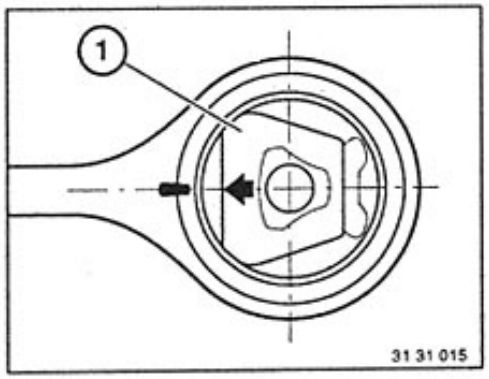

Installation:
Remove grease from rubber mounts and thrust strut bore.
Arrow on plastic clip (1) faces mark on thrust strut.
Special tool must bear on the mount outer sleeve while pressing in.

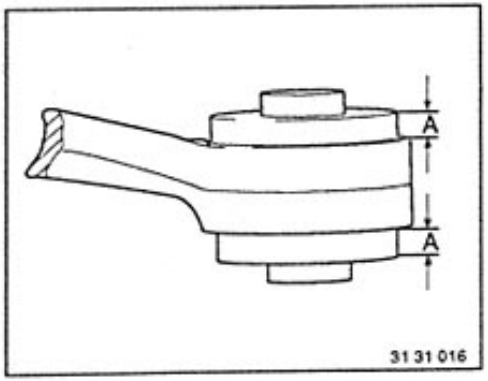

Installation:
Protrusion (A) equal on both sides.

31 21 180 REPLACING BEARINGS (WHEEL HUB) FOR FRONT WHEEL

Important!
Never reuse bearing unit after removal.

Unscrew brake disc (line remains connected) – see Group 34.

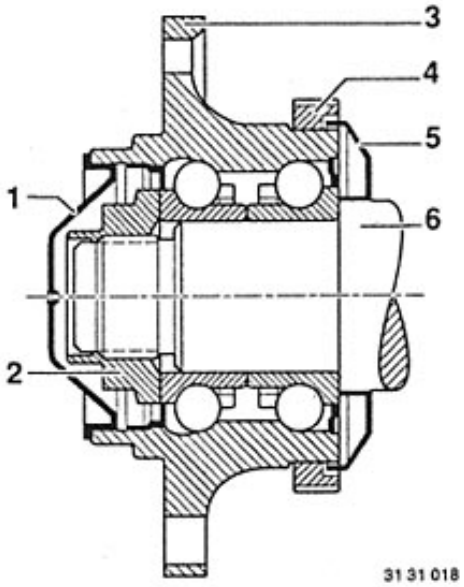

Wheel Bearings:

1 Grease cap
2 Collar nut
3 Bearing unit
4 Pulse gear
5 Dust cover
6 Stub axle

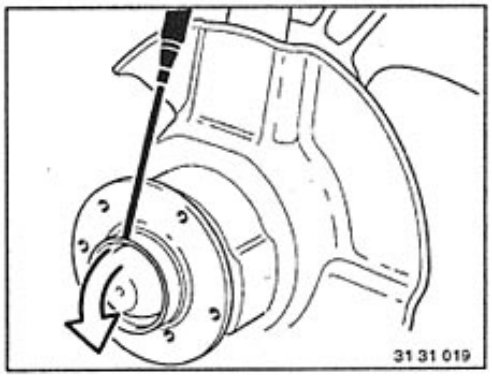

Pry off grease cap with a screwdriver. Never reuse cap!

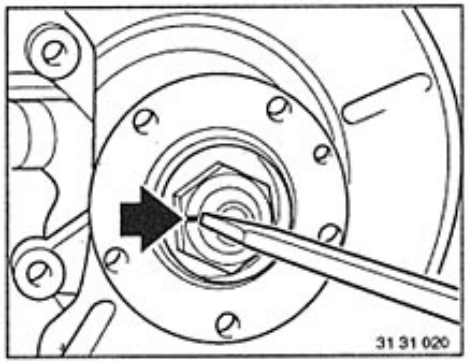

Chisel off lock of collar nut.

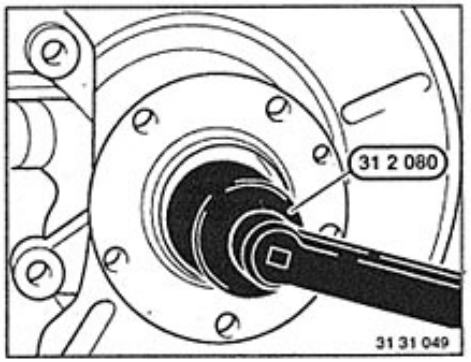

Unscrew nut with Special Tool 31 2 080. Never reuse nut!

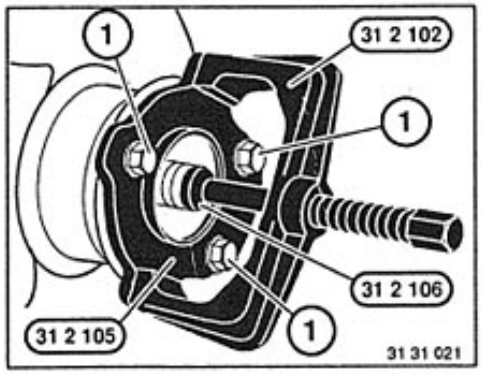

Pull off bearing unit with Special Tools 31 2 102 / 105 / 106 and wheel bolts (1).

Never reuse bearing unit!

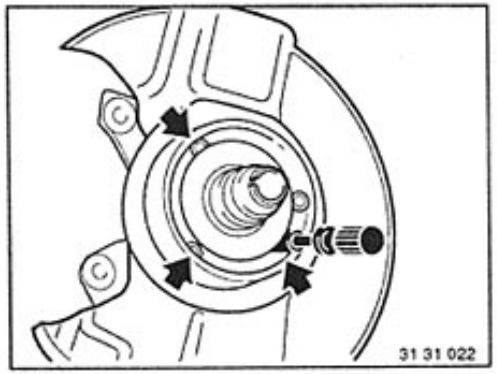

If bearing inner race remains on the stub axle, bend dust cover, insert wrench key and unscrew guard.

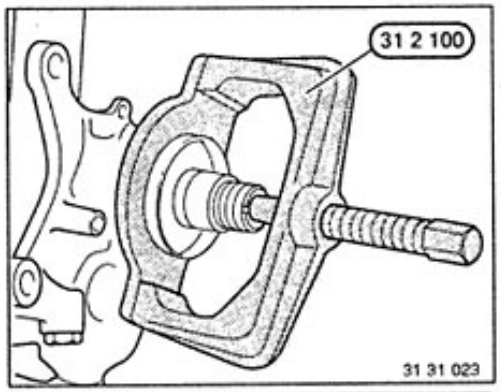

Pull off bearing inner race and dust cover using Special Tool 31 2 100.

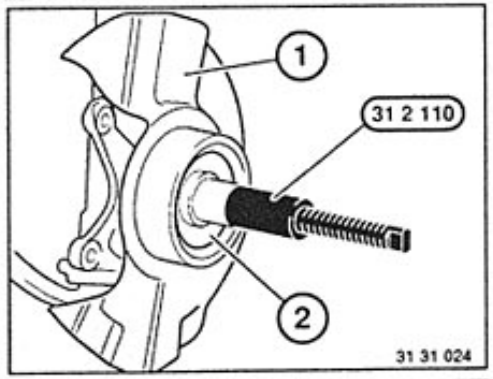

Screw on guard (1).
Install new dust cover (2).
Screw on Special Tool 31 2 110 whole length of threads.

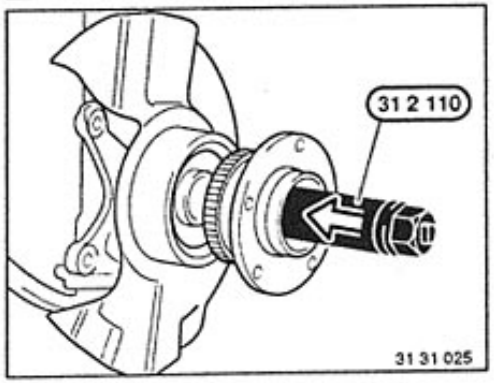

Slide and pull on new bearing unit using Special Tool 31 2 110.

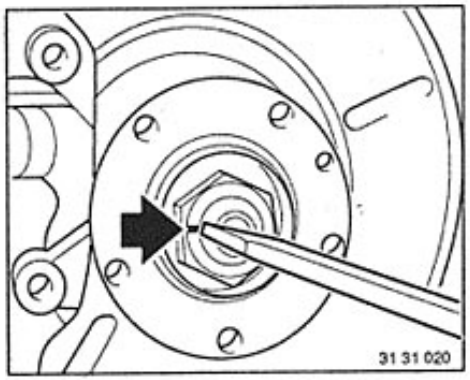

Screw on new collar nut to correct tightening torque* and lock by punching.

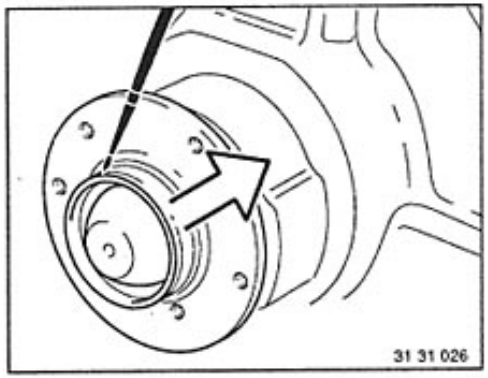

Install new cap with sealing compound**.

* Refer to Specifications
** Source of Supply: BMW Parts

SPRING STRUT ASSEMBLY DRAWING

1 Cap
2 Stop washer
3 Nut
4 Upper spring ring
5 Mount
6 Support
7 Ring for hollow piston rod
8 Rubber damper
9 Dust cover
10 Shock absorber
11 Screw-on ring
12 Coil spring
13 Lower spring ring
14 Spring strut

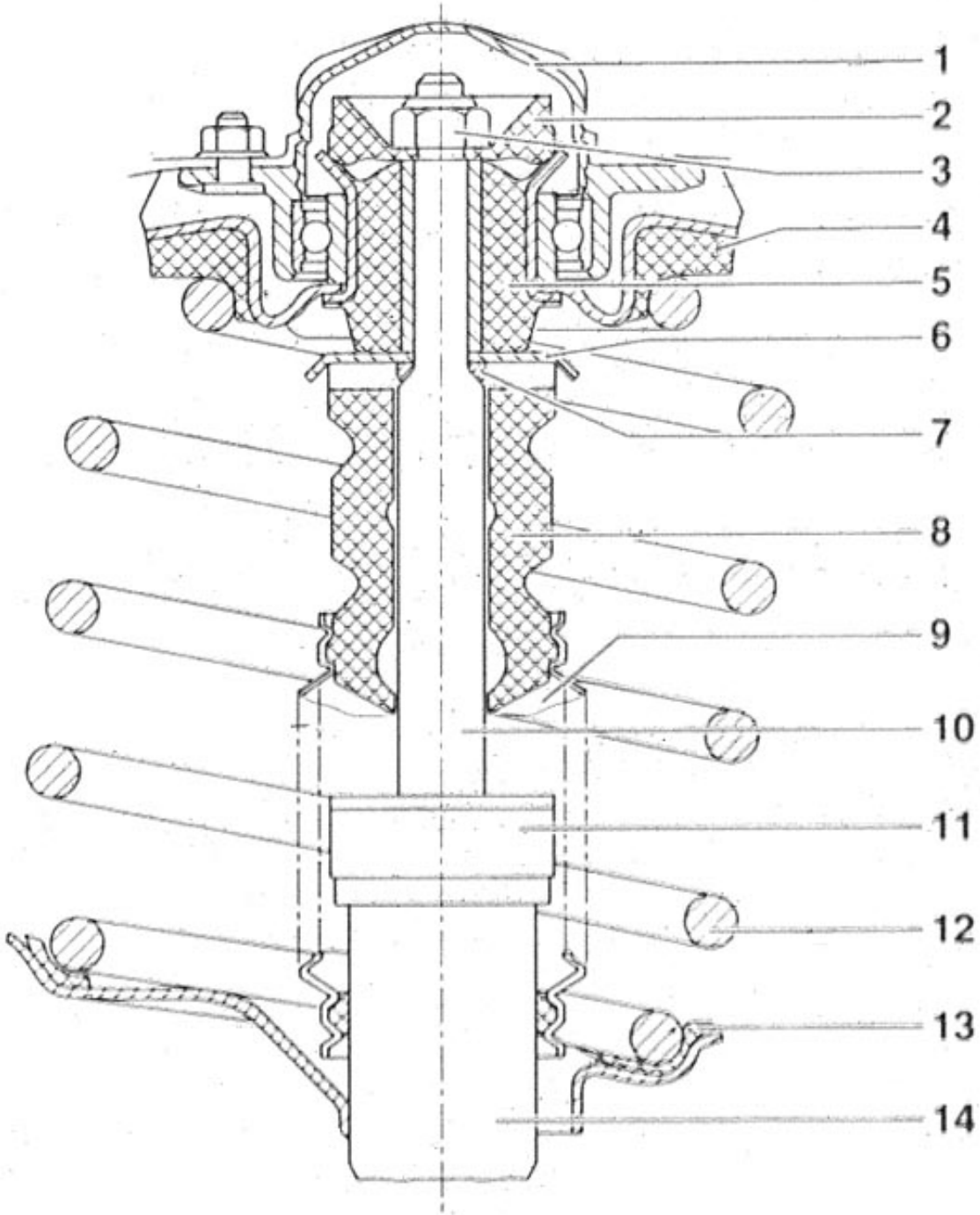

31 31 028

31 31 000 Removing and installing complete front left or right spring strut shock absorber

Remove brake caliper (line remains connected), refer to Gr. 34.
Remove ABS impulse sensor, refer to Gr. 34.
EDC – disconnect line, refer to Gr. 37.

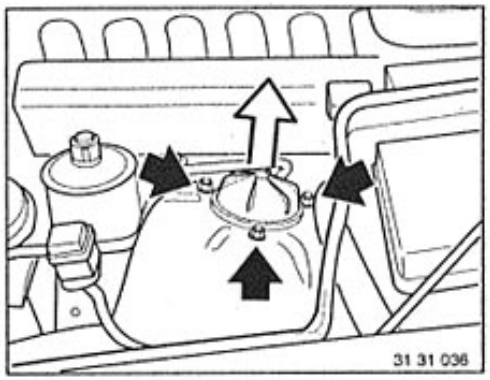

Lift off cap.
Support spring strut shock absorber.
Remove spring strut shock absorber support bearing from wheel arch.

Installation:
Replace self-locking nut.
Tightening torque*.

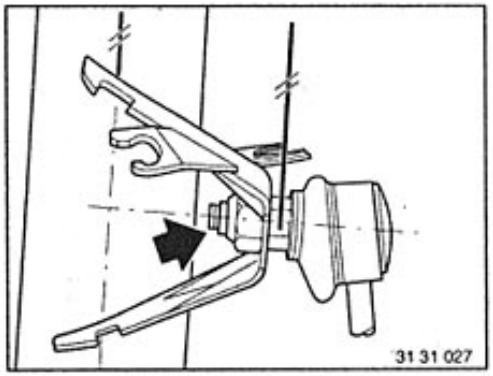

Unfasten stabilizer pressure rod – brace with open-end wrench.

Installation:
Wrench face on ball pin parallel to damper shaft.
Replace self-locking nut.
Tightening torque*.

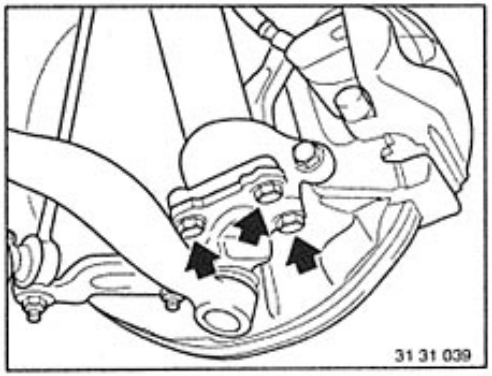

Unfasten screws.

Installation:
Clean thread in bore and on screws.
Secure screws with screw cement**.
Tightening torque*.

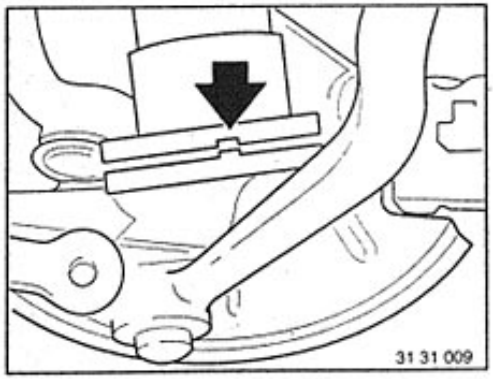

Ensure unit is correctly installed.

* Refer to Technical Data
** Source of Supply: BMW Parts Service

31 31 031 Replacing left or right front spring strut shock absorber

Note:
The shock absorber and spring strut form one unit and cannot be replaced separately.

To know whether a spring strut shock absorber has to be replaced, it must either be checked installed with a Shock Tester or removed and checked in a shock absorber testing machine.
Also refer to Service Information bulletin 37 01 92 (502).

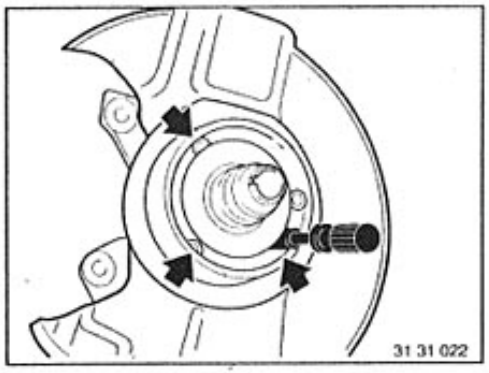

Only remove bearing (wheel hub) from front wheel 31 21 180 if dust shield is to be reused.

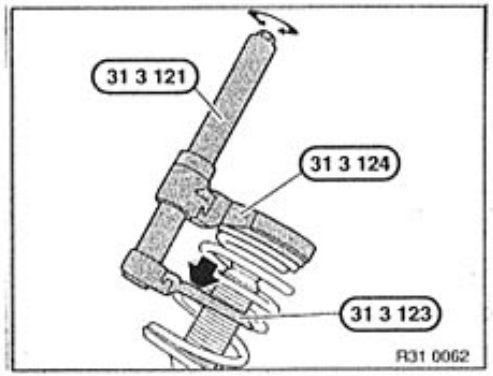

Coil spring with special tool 31 3 121/ 123/ 124.

Caution!
Lowest coil of spring must be securely mounted in tool and thrust bearing should be flush.

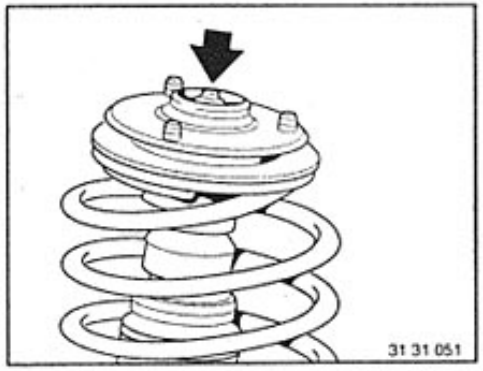

When replacing a spring strut, always fit a new spring strut with the same designation (K) (color spot).

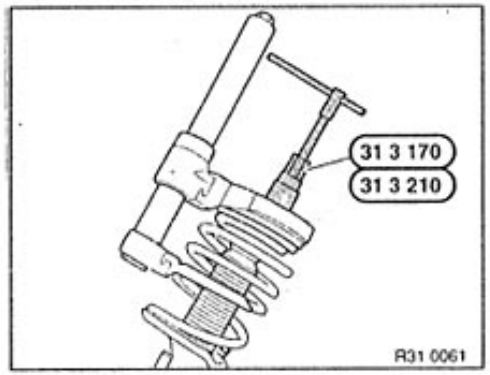

Unscrew and remove self-locking nut with special tool 31 3 170/210 and brace piston rod.

Installation:
Replace self-locking nut.
Tightening torque*.

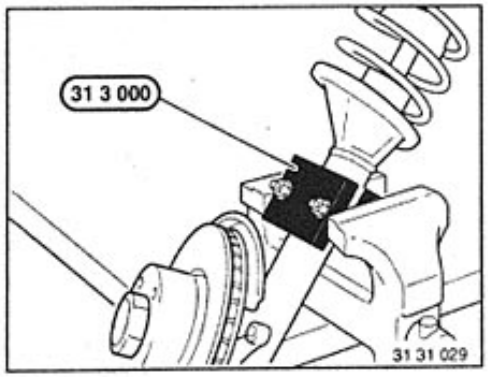

Removing and installing a spring strut 31 31 000.
Grip spring strut shock absorber in vise with special tool 31 3 000.

* Refer to Technical Data

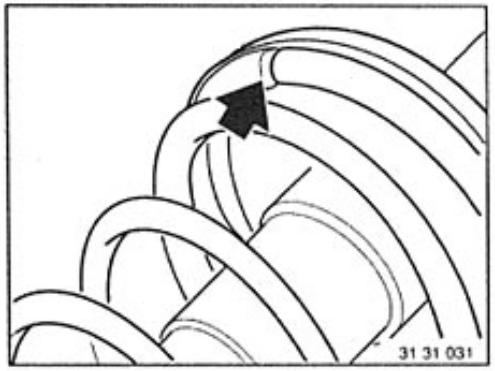

Remove coil spring and additional spring from spring strut shock absorber.
Fit the parts removed to the new spring strut shock absorber.

Installation:
Note configuration, see Page 31 - 31/1.
Check spring mount at top and bottom, also collar and auxiliary spring, replacing if necessary.
The end of the coil spring must contact the stop in the lower plate spring.

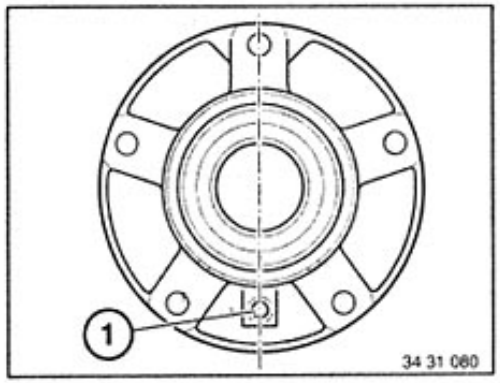

Caution!
On vehicles constructed before introduction of the standard wheel bearing, not only the spring strut shock absorber has to be replaced: also replace parts indicated in Parts Microfilm.

The standard wheel bearing can be identified by the bore (1) in the center for securing the brake disks.

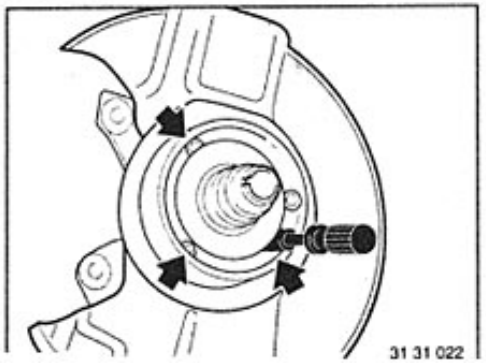

Fit protective plate and new bearing (wheel hub) to front wheel 31 21 180.

After assembly, align front axle if necessary.

* Refer to Technical Data

31 33 001 Replacing left or right front spring strut shock absorber thrust bearing

Operation identical to replacing spring strut shock absorber: 31 31 031.

31 33 100 Removing and installing or replacing coil spring for left or right front spring strut shock absorber

Operation identical to replacing spring strut shock absorber: 31 31 031.

Caution!
On one axle, only fit springs in pairs with the same BMW no. (1) (located on end of spring).

Allocation of springs by vehicle model and, if applicable, special equipment, e.g. air-conditioning, sports, ... and date of introduction - refer to Parts Microfilm.

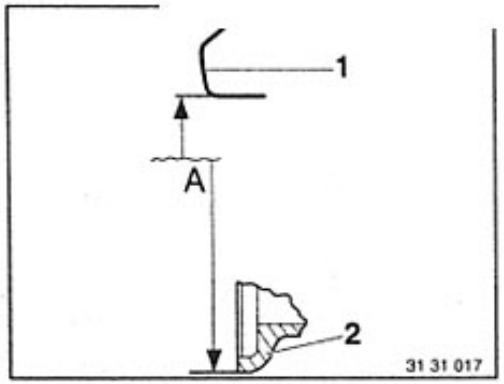

- Move vehicle into normal position*.
- Determine actual ride level setting (A) – measurement from lower edge of wheel arch (1) to rim flange (2) at height of wheel centre. Obtain mean value in each case after raising and lowering the vehicle body on each wheel and calculating a mean value for each axle.
- Determine any difference from nominal ride level setting*.
- Identifying which spring is installed – refer to 31 33 100.
- Determine correction spring from table. Figures indicate the difference in ride level setting (nominal values mm) between each of the different springs.

Example:

The vehicle is equipped with coil spring BMW No. 1 137 954 and is 6 mm too low – possibly because of a high proportion of custom items. By installing spring with BMW No. 1 137 955, the nominal ride level setting is achieved.

Note:
It is no longer possible to perform an additional correction of ride level by inserting springs of different thicknesses.

Table for Serie 840i, 850i,
and EDC III ab 4/92:

A Equipment after correction
B Equipment when delivered
a Raised suspension
b Lowered suspension

*Refer to Technical Data

Table for EDC III
850i until 4/92:

Explanation, refer to pages 31- 33/2

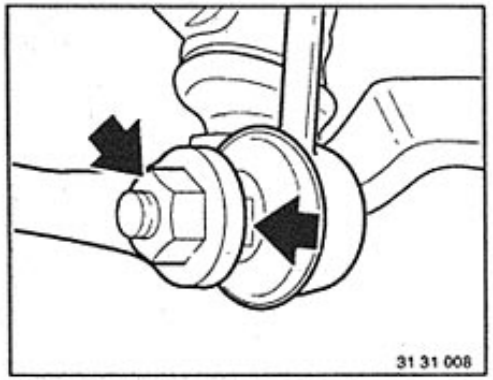

31 35 000 REMOVING AND INSTALLING FRONT STABILIZER

Unscrew left and right thrust struts.

Installation:
Wrench surface on ball pin must be parallel to the absorber axis.
Replace self-locking nut.
Tightening torque*.

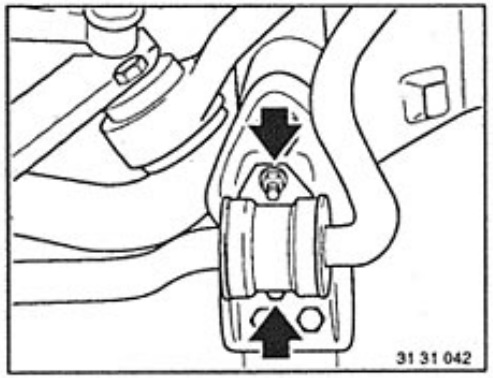

Unscrew left and right nuts.
Take off stabilizer.

See Specifications

TROUBLESHOOTING FRONT AXLE

Condition	Cause	Correction
Grinding noise (louder in curves)	a) Wheel bearings faulty	a) Replace wheel bearings
Vibration	a) Imbalance of wheels b) Lateral and radial runout of rims c) Radial runout of tires	a) Balance wheels b) Replace rims, if necessary c) Match or replace tires
Steering wheel shake	a) Imbalance of wheels b) Radial and lateral runout of rims c) Shock absorbing effect insufficient d) Thrust strut mounts faulty e) Wrong thrust strut mounts installed f) Steering gear play excessive	a) Balance wheels b) Replace rims, if necessary c) Replace shock absorbers d) Replace thrust strut mounts e) Replace thrust strut mounts f) Adjust pressure point
Rattling noise	a) Shock absorber cartridge in spring strut loose b) Ball joint on control arm worn c) Ball joint on thrust strut worn d) Stabilizer rubber mounts worn e) Ball joints of thrust rod worn f) Front axle carrier mounted loose on body	a) Tighten screw-on ring (inspect threads) b) Replace control arm c) Replace thrust strut d) Replace rubber mounts e) Replace thrust rod f) Tighten (inspect threads)

TROUBLESHOOTING FRONT AXLE

Condition	Cause	Correction
Body swing long time after driving on rough road	Shock absorbing effect insufficient (see "Troubleshooting Shock Absorbers" on page 31-90/3)	Replace shock absorbers
Body wip when driving over successive rough road surfaces		
Body rise while accelerating		
Wheel jump even on normal road surfaces		
Car breaking out while braking		
Breaking out (skidding) in curves due to poor track holding		

TROUBLESHOOTING SHOCK ABSORBERS

The condition of shock absorbers can only be checked with a shock absorber tester in car or with a shock absorber testing machine after removal.

Condition	Cause	Correction
Shock absorbers knocking (bottoming)	a) Rubber dampers faulty b) Shock absorbing effect insufficient	a) Check or replace rubber dampers b) Replace shock absorbers
Shock absorber noise	a) Shock absorber cartridge loose b) Installed shock absorbers had been stored laying down with piston rods run in c) Shock absorbers faulty	a) Tighten screw-on ring; inspect threads b) Store shock absorbers standing upright with piston rods run out at room temperature for 24 hours c) Replace shock absorbers
Poor handling	a) Weak shock absorbers	a) Replace shock absorbers
Flat spots on tire treads	a) Shock absorbers faulty	a) Replace shock absorbers

32 Steering and wheel alignment

GENERAL INFORMATION

Steering Gear:
The steering gear could be damaged from impact forces if a car is involved in an accident or operated under conditions similar to an accident. There must always be conformance with factory specifications in the interest of safety – refer to Service Information 32 01 88 (828).

Tie Rod Joint:
Refer to Service Information 32 03 87 (733) for an evaluation of wear on ball joints.

Servotronic:
Troubleshoot with BMW DIAGNOSING SYSTEM - refer to Car Electric/Electronic Test Plan.

Airbag:
Troubleshoot with BMW DIAGNOSING SYSTEM - refer to Car Electric/Electronic Test Plan.

Electric Steering Wheel Adjustment:
Troubleshoot on electronic components - refer to Car Electric/Electronic Test Plan.

Car with Interlock System:
The function must be checked if a component of the interlock system had been removed and installed or the installed position of the interlock cable was changed - refer to 33 32 170.

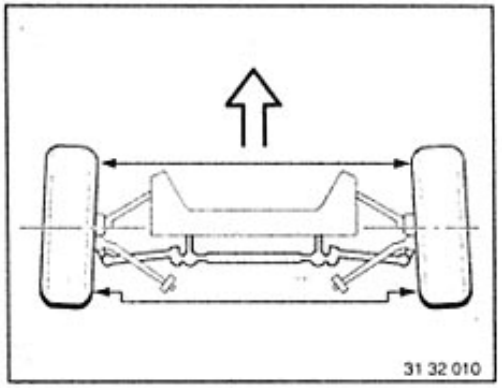

GENERAL INFORMATION AND DEFINITIONS

Toe

Is the reduction in distance of front of front wheels to rear of front wheels. Toe prevents the wheels from running apart while driving and consequently wheel shimmy and grinding, excessive tire wear, excessive loads on steering linkage and joints as well as hard steering of car. Toe is measured in "straight ahead position".

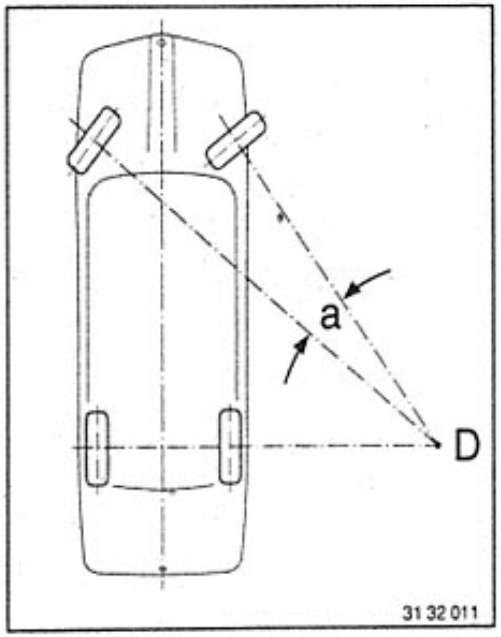

Toe Difference Angle

Is the angular position of the wheel on the inside of a curve to the wheel on the outside of a curve when driving in a curve. The steering is designed that the angular position of the wheels changes as steering lock progresses. The toe difference angle provides information on the pertinent operation of the steering trapezoid for left or right steering lock from the center position. A correctly adjusted toe difference angle produces equal values for left and right lock in due consideration for factory manufacturing tolerances.

a = Toe difference angle
D = Turning circle center point

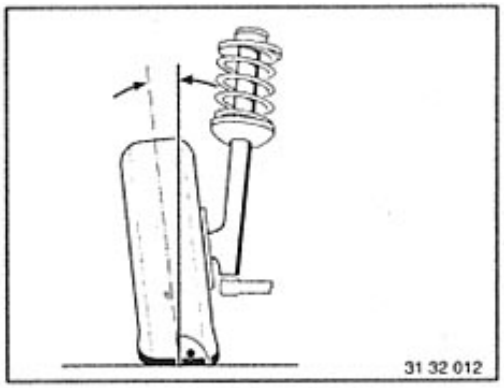

Camber

Is the inclination of a wheel from a perpendicular line.

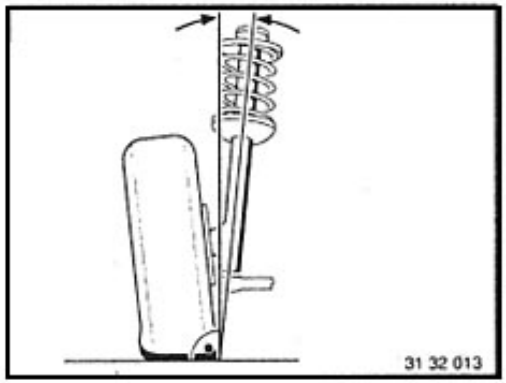

King Pin Inclination

Is the angle, by which the king pin* is inclined inward from a perpendicular line to the lateral axis of the car.
The king pin inclination produces returning forces, which return the road wheels and steering wheel to straight ahead after driving through a curve or around a corner.

Camber and king pin inclination determine the location of the wheel contact point with the road surface.
King pin inclination reduces the leverage, on which frictional forces are engaged, which makes it easier to turn the wheels to left or right lock. In addition, the jolts from rough road surfaces do not have as strong influence on the steering.

The "king pin" is equal to a line through the center point of the spring strut mount and control arm ball joint.

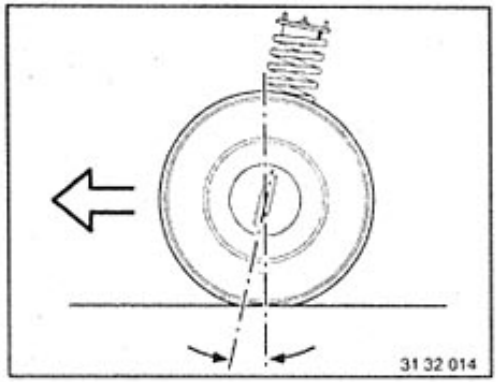

Caster

is the inclination of the king pin* in forward direction as seen from the side.

The wheels are pulled and not pushed because of caster. In a similar manner to king pin inclination, when driving in curves or around corners returning forces are produced to help return the wheels to straight ahead position.

The "king pin" is equal to a line through the center point of the spring strut mount and control arm ball joint.

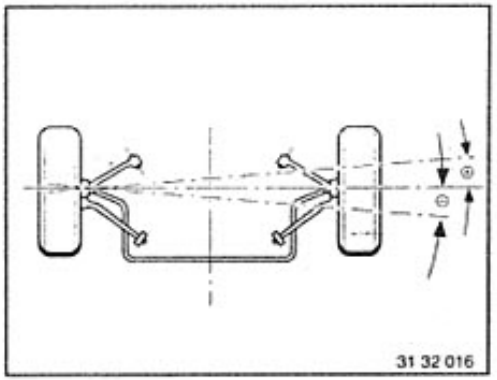

Wheel Offset

is the angle, by which one front wheel is displaced more toward front or rear than the other front wheel.

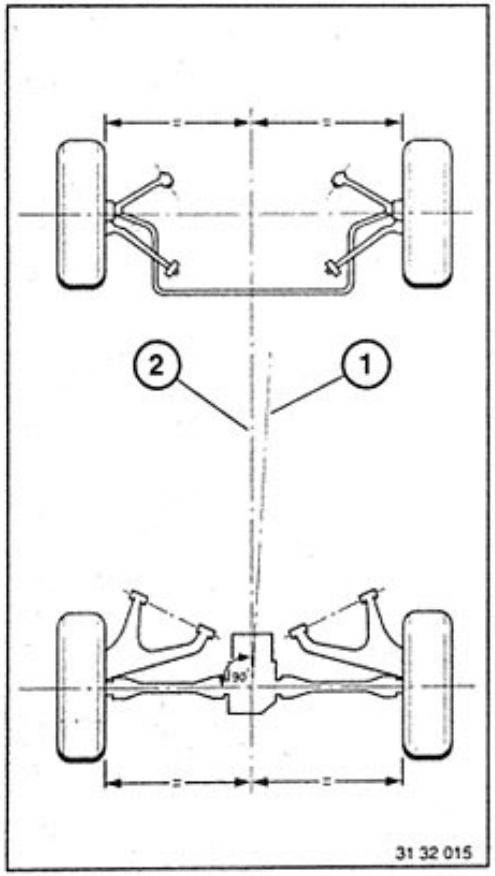

Geometrical Axis 1

is the bisecting line of an angle from the total rear wheel toe.
Front wheel measurements are taken in reference to this axis.

Symmetrical Axis 2

is a center line running through the front and rear axles.

32 00 150 CHECKING WHEEL ALIGNMENT WITH ELECTRONIC TESTER (with KDS)

Requirements to be fulfilled prior to checking wheel alignment:

1. Good, uniform tire treads.
2. Specified tire pressure**.
3. Wheel rims in perfect condition*.
4. Specified wheel bearing play*.
5. Car loaded down to normal position*.
6. Specified ride level height*.

Always check wheel alignment only with a recommended electronic tester (see Workshop Equipment) and also use turntables on the rear wheels.

1 = Toe
2 = Camber
3 = Caster (with 10° or 20° wheel lock)
4 = Toe difference angle (with 20° wheel lock)
5 = Wheel offset
6 = Camber
7 = Rear wheel position
8 = Toe
9 = Geometrical axis

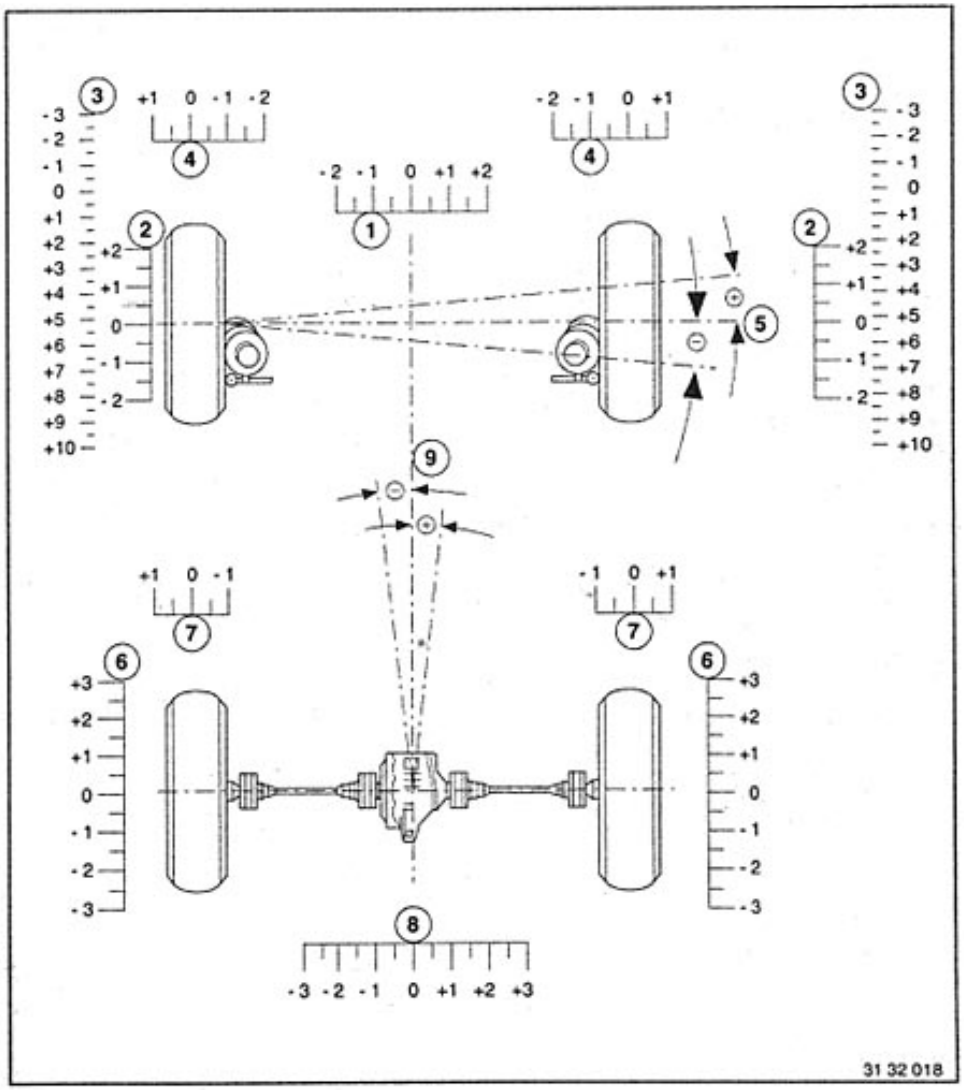

* Refer to Specifications of Gr. 31/32/33/36
** Refer to Service Information of Gr. 36

32 00 610 Adjusting front axle (with KDS)

Caution!
On vehicle with
Electronic Damper Control or
Active Rear Axle Kinematics or
Dynamic Stability Control, a "steering angle check" with the BMW Service Tester must be performed after each wheel adjustment check.

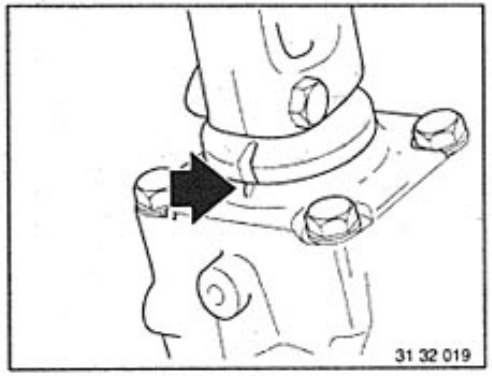

Adjust differential toe and camber angles.
Move steering gear into straight-ahead position (marking on housing and steering shaft).

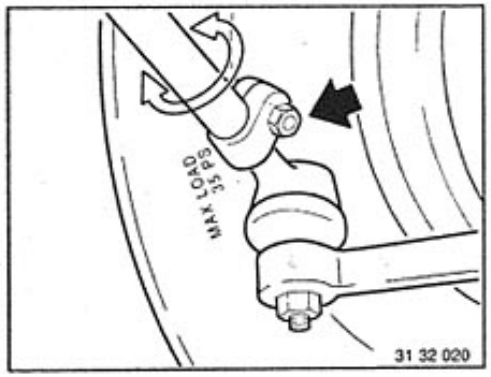

Loosen both clamping screws on track rod.
Check toe of left and right wheel against nominal value* by rotating the threaded sleeve

Installation:
Ensure that ball joints are not twisted.
Tightening torque*.

* See Technical Data

32 00 620 Adjusting rear axle (with KDS)

Caution!
On vehicles with Active Rear Axle Kinematics (AHK), an actuator member check must be performed wiht the BMW Service Tester before each wheel alignment check.

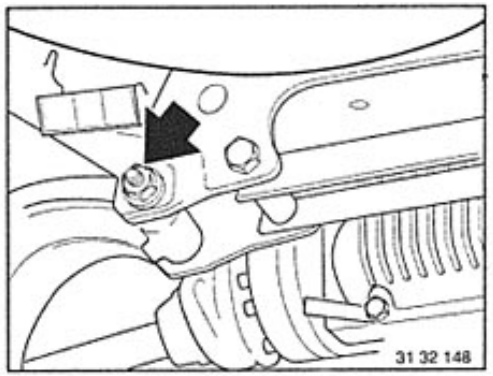

Adjusting toe-in.
Replace nut on support arm mount and tighten to tightening torque*.
Loosen nut one 1/2 turn and adjust toe-in to nominal value* by rotating the eccentric screw.
Tighten nut to tightening torque*.
If the nut has to be tightened down more than 5 times, it must be replaced – the self-locking characteristics become too impaired.

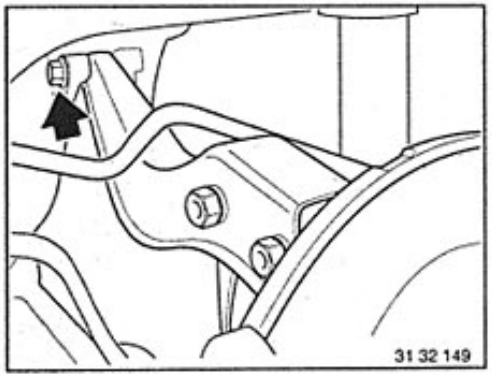

Adjusting camber always also involves a change in toe-in which is why camber must always be adjusted first.

Adjusting camber:
Replace nuts on trailing arm mount and tighten to tightening torque*.
Now loosen nut 1/2 a urn and adjust camber to nominal value* by rotating eccentric screw.
Tighten nut to tightening torque*.
If a nut is tightened down more than 5 times during the adjustment check, it must be replaced – the self-locking characteristics become too impaired.

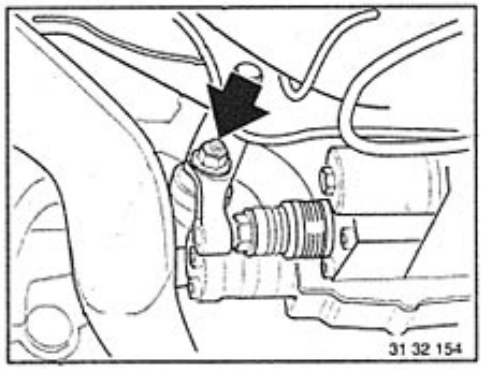

Adjusting toe-in on vehicles with Active Rear Axle Kinematics:

Replace nut on support arm mount on idler arm and tighten down to tightening torque*.
Loosen nut one 1/2 turn and adjust toe-in to nominal value* by rotating the eccentric screw.
Tighten down nut to tightening torque*.
If the nut has to be tightened down more than 5 times, it must be replaced – the self-locking characteristics become too impaired.

* Refer to Technical Data

* Refer to Technical Data

TROUBLESHOOTING FRONT WHEEL ALIGNMENT

Condition	Cause	Correction
1 Toe deviation	a) Car not in normal position b) Tie rod(s) bent c) Track arm on spring strut bent d) Tie rod ball joints worn e) Rubber mount in control arm faulty	a) Ride level height, see Specifications of Group 31 b) Replace tie rod(s) c) Replace track arm d) Replace tie rod(s) or ball joints e) Replace rubber mount
2 Camber deviation Camber is given by design and cannot be adjusted.	a) Rubber mount in control arm faulty b) Control arm deformed c) Spring strut deformed d) Guide joint worn e) Spring force insufficient f) Front axle carrier deformed g) Spring strut mount holder deformed h) Distortion in floor assembly (engine carrier)	a) Replace rubber mount b) Replace control arm c) Replace spring strut d) Replace control arm e) Replace coil springs Ride level height, see Specifications of Group 31 f) Replace front axle carrier g) Repair front end h) Repair body
3 Caster deviation Caster is given by design and cannot be adjusted.	a) Rubber mount for thrust strut faulty b) Thrust strut deformed c) Control arm deformed d) Spring strut deformed e) Wheel house deformed (spring strut mount) f) Distortion in floor assembly (engine carrier)	a) Replace rubber mount b) Replace thrust strut c) Replace control arm d) Replace spring strut e) Repair front end f) Repair body
4 Toe difference angle deviation	Assuming camber and caster are correct: a) Tie rods not adjusted uniformly b) Track arm on spring strut bent	a) Adjust toe on left and right sides to same value b) Replace track arm
5 Wheel offset deviation	Assuming front wheels have equal single toe to geometrical axis: a) Front axle carrier deformed b) Engine carrier deformed c) Control arm deformed d) Thrust strut deformed	a) Replace front axle carrier b) Repair body c) Replace control arm d) Replace thrust strut

TROUBLESHOOTING REAR WHEEL ALIGNMENT

Condition	Cause	Correction
6 Camber deviation	a) Car not in normal position Spring force insufficient b) Rubber mounts on rear axle carrier faulty c) Rear axle carrier deformed d) Control arm deformed e) Guide arm deformed f) Distortion in floor assembly	a) Ride level height, see Specifications of Group 33 b) Replace rubber mounts c) Check or replace rear axle carrier d) Check or replace control arm e) Check or replace guide arm f) Repair body
7 Rear wheel position deviation	a) Rear axle carrier displaced laterally b) Distortion in floor assembly	a) Check / replace rubber mounts on rear axle carrier b) Repair body
8 Toe deviation	a) Car not in normal position or spring force insufficient b) Rubber mounts in rear axle carrier faulty c) Support arm deformed d) Fluid blocks in trailing arm faulty e) Rear axle carrier deformed f) Trailing arm deformed g) "Active rear axle kinematic" system not OK	a) Ride level height, see Specifications of Group 33 b) Replace rubber mounts c) Replace support arm d) Replace fluid blocks e) Check or replace rear axle carrier f) Check or replace trailing arm g) Repair "active rear axle kinematic" system
9 Deviation from geometrical axis	Assuming total rear wheel toe is correct: a) Distortion in floor assembly	a) Repair body

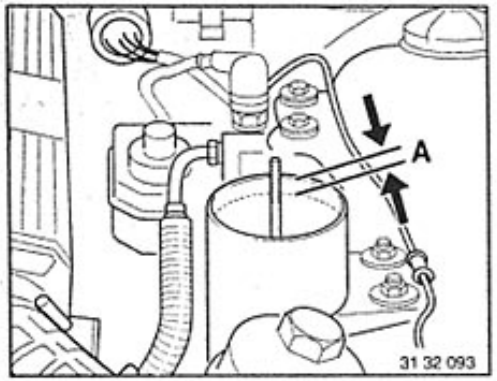

32 13 006 FILLING AND BLEEDING POWER STEERING

Filling and Checking Procedures:

1. **Filling with Engine Stopped:**

   Fill oil tank up to (A) = approx. 25 mm below edge.

2. **Filling and Bleeding with Engine Running:**

2.1 **Filling:**

   Pour in the remaining amount* of oil uniformly while starting the engine.

2.2 **Bleeding:**

   Turn steering wheel two times each against left and right locks, operate brake pedal five times, wait about 30 seconds and operate brake pedal five more times.

3. **Checking Oil Level with Engine Stopped:**

   Operate brake pedal until reservoir is empty (reservoir is empty when oil level no longer rises - visual check - or when suddenly more force is required to press down the pedal - force check).

   Lift rear axle until wheels have cleared ground. Reservoirs of ride level height control are empty after 2 minutes.

   If applicable, discharge the reservoir of "active rear axle kinematic" with help of the pressure discharging plug - refer to 33 34 . . ..

   Oil level must be about 10 mm below upper edge of tank.

   Correct deviation in oil level with the engine stopped by adding hydraulic fluid*.

   Cars with ASC+T - refer to 34 00 040.

* Refer to Specifications

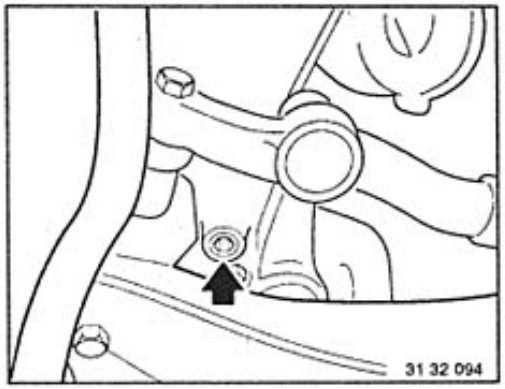

32 13 ... ADJUSTING PRESSURE POINT

Important!
The pressure point of steering gears with automatic pressure point adjustment – recognized on punch-locked socket head bolt – should only be adjusted after a repair – see 32 13 631.

32 13 060 Removing and installing power steering gear

Airbag vehicle – remove steering wheel 32 33 000.

Bleed pressure accumulator = actuate brake pedal approx. 10 times.
Draw off hydraulic fluid from container – do not reuse.

Installation:
Topping up and bleeding hydraulic system 32 16 006.
Vehicle with:
Electronic Damper Control or
Active Rear Axle Kinematics or
Dynamic Stability Control
– perform steering angle check with BMW Service Tester.

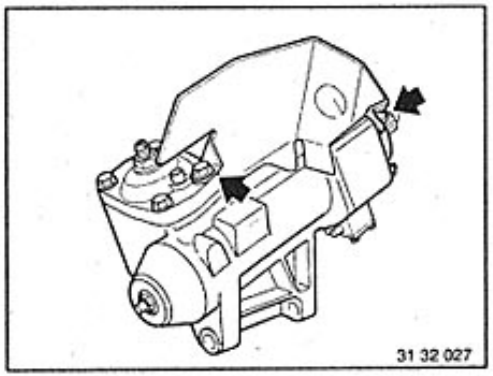

Remove heat shield from steering gear

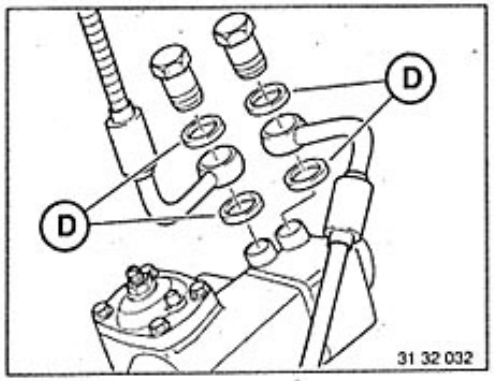

Remove hydraulic leads.
Seal bores with dust caps.

Installation:
Fit new sealing rings (D).
Tightening torque*.

* Refer to Technical Data

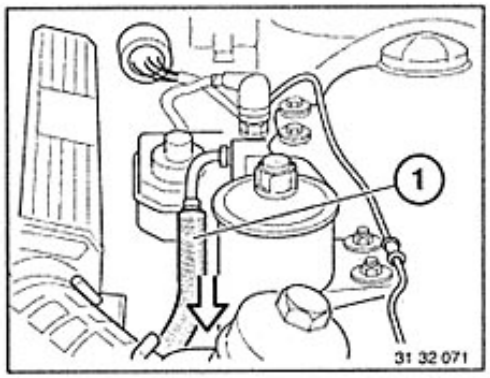

Installation:
Slide heat shield (1) downwards.

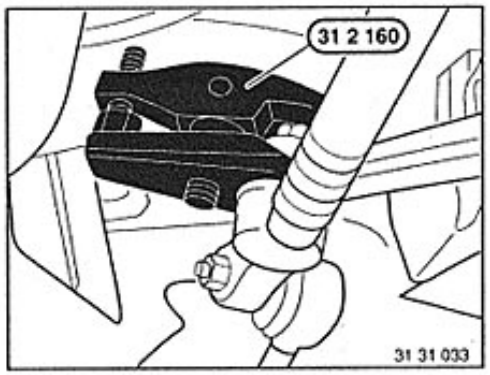

Unfasten nut.
Push track rod off pitman arm using special tool 31 2 160.

Installation:
Fit new self-locking nut. Taper and cone free of grease.
Tightening torque*.

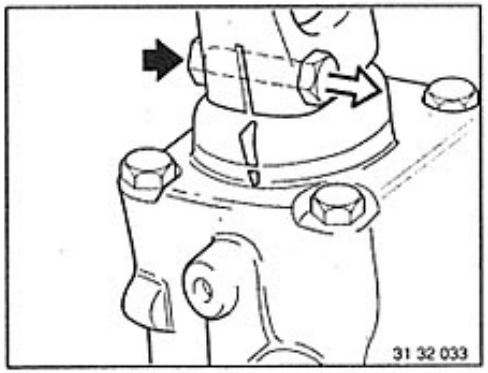

Unfasten screw.
Slide universal joint on steering gear.

Screw must locate in retaining groove in steering unit.
Tightening torque*.

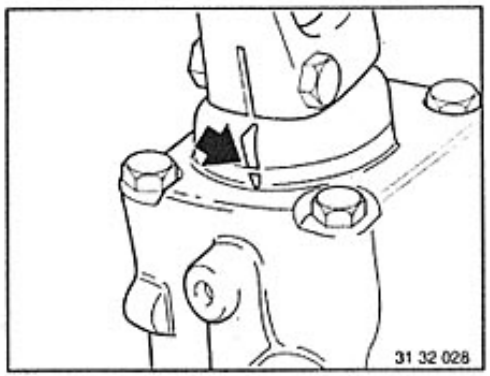

Installation:
Ensure that steering wheel and steering gear are in straight-ahead position.
Turn steering gear to left or right lock, then turn back approx. 1.7 turns until marks are aligned.

* Refer to Technical Data

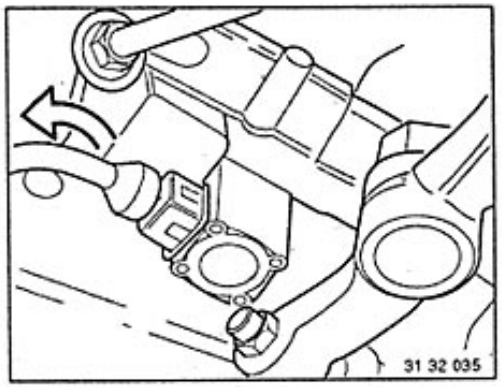

* If applicable, pull plug off of the Servotronic converter.

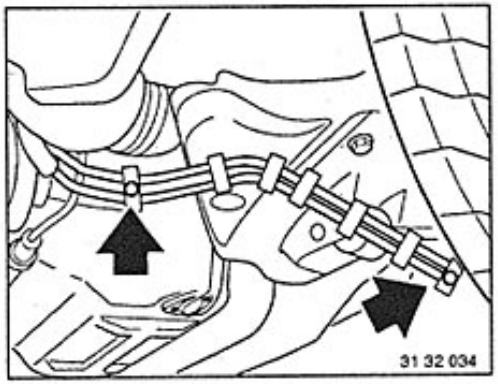

Loosen mounting clamps of oil cooler pipes.

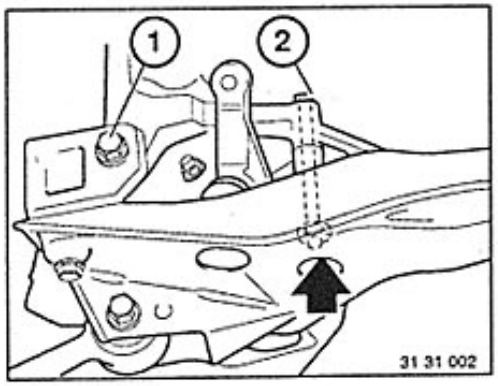

Unscrew bolts (1 and 2).
Pull back the disconnected tie rod — turn the left front wheel against lock if necessary.
Take out the steering gear downwards — if necessary, move the steering drop arm into a more favorable position by turning the steering stub.

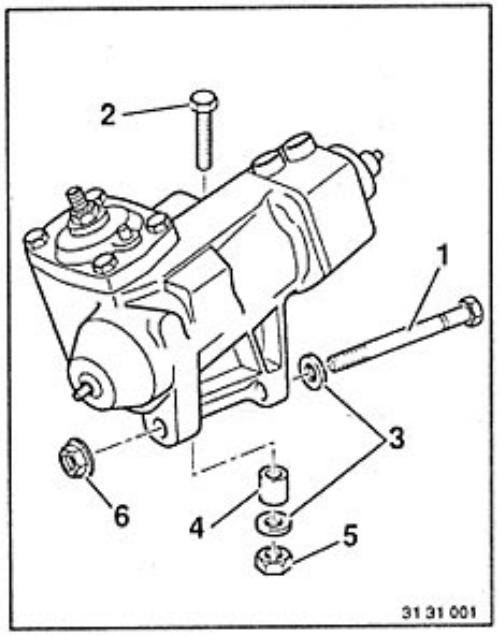

Installation:

1 Bolt
2 Bolt (only use 10.9 strength class)
3 Washer
4 Sleeve
5 Nut (replace)
6 Nut with washer (replace)

Tightening torque*.

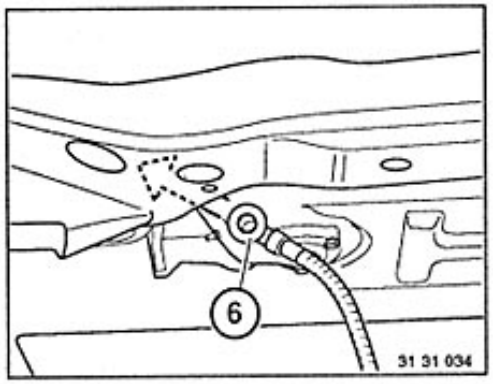

Installation:
Install nut (6) using a flexible magnetic lifter.

* Refer to Specifications

DESIGN AND DESCRIPTION OF BALL AND NUT POWER STEERING

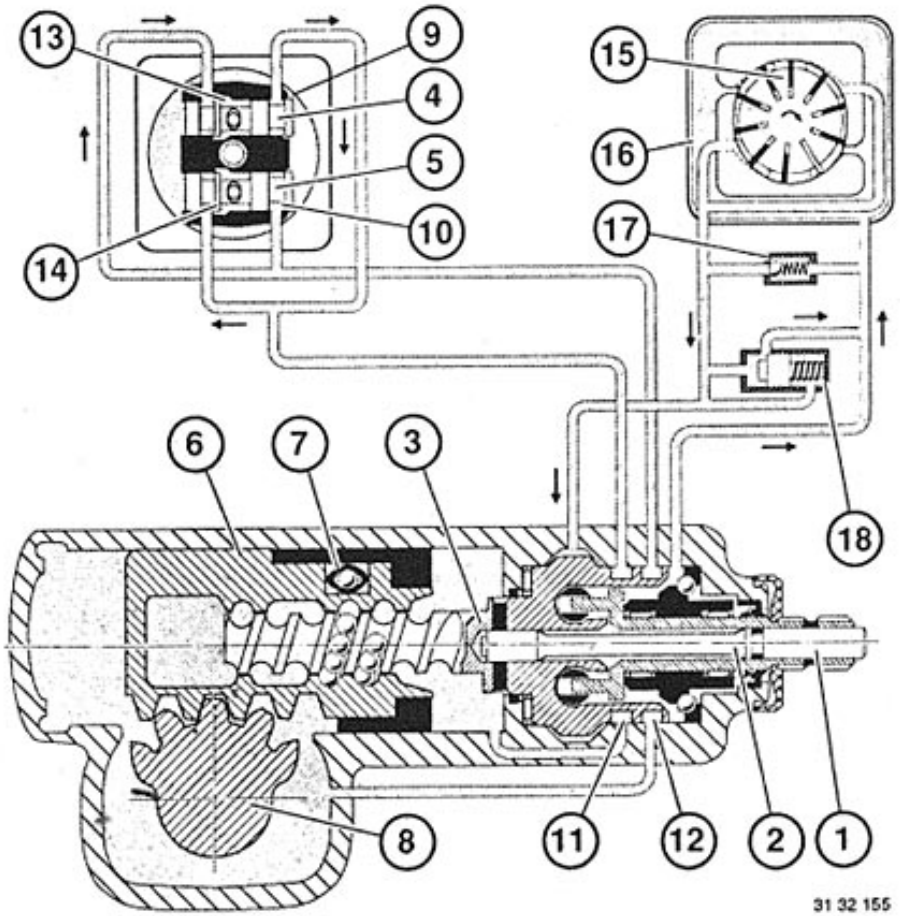

The housing contains a complete mechanical steering gear, the control valve and operating cylinder. Steering spindle (1) is connected elastically with worm (3) via torsion bar (2) and with valve pistons (4 and 5) without play. The valve pistons are installed transversely in the worm head. The connection between piston (6) and worm (3) is accomplished with an infinite line of balls. When turning the worm the balls are taken up at one end by circulating tube (7) and put out again at the other end of the balls. Piston (6) and sector shaft (8) are meshed. The special shape of teeth on the sector shaft permits zero-play adjustment with an adjusting screw.

In neutral position of valves (4 and 5) the oil flow delivered by the pump passes through the steering and can flow through the opened feed and return control edges to the cylinder chamber and return flow. Hydraulic support cuts in when force is transmitted from the steering wheel or from the steering drop arm via the sector shaft and pistons to the worm. Torsion bar (2) then serves as a link. It deforms itself in the elastic range and returns the valve pistons to neutral position after releasing the steering wheel. Moving valves (4 and 5) will let the oil flow into only one of the operating cylinder chambers and in this manner support the rotating motion of the steering spindle and/or counteract the jolt from rough roads.

Steering Wheel in Neutral Position:

Oil flows from the impeller pump into the worm head, through feed grooves (9 and 10) to radial grooves (11 and 12). From here via connecting bores to the right and left cylinder chambers and via opened return flow grooves (13 and 14) back to the oil tank. The valve is also illustrated in cross section.

15 = Pump
16 = Oil tank
17 = Pressure relief valve
18 = Control valve

Steering Wheel Turned Clockwise:

Valve piston (4) is displaced to the right and feed groove (9) opened. Valve piston (5) is displaced to the left and feed groove (10) closed. This lets the oil flow into the right cylinder chamber. Oil in the left cylinder chamber is forced out and flows back into the oil tank.

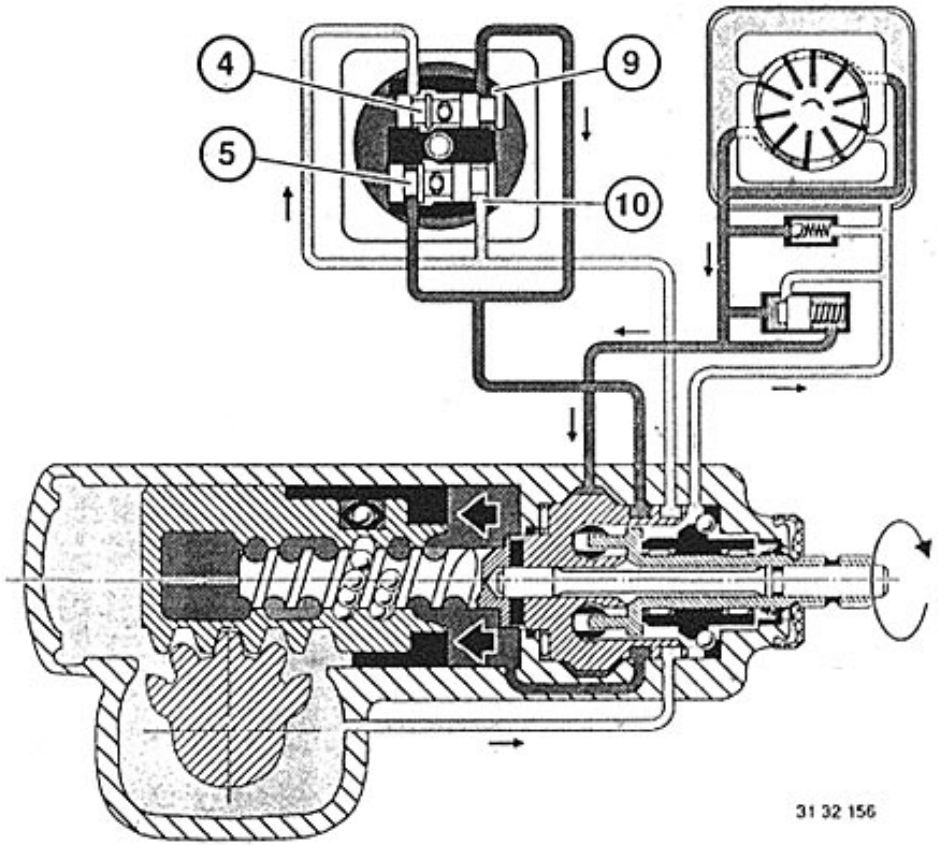

Steering Wheel Turned Counterclockwise:

Valve piston (5) is displaced to the right and feed groove (10) opened. Valve piston (4) is displaced to the left and feed groove (9) closed. This lets the oil flow into the left cylinder chamber. Oil in the right cylinder chamber is forced out and flows back into the oil tank.

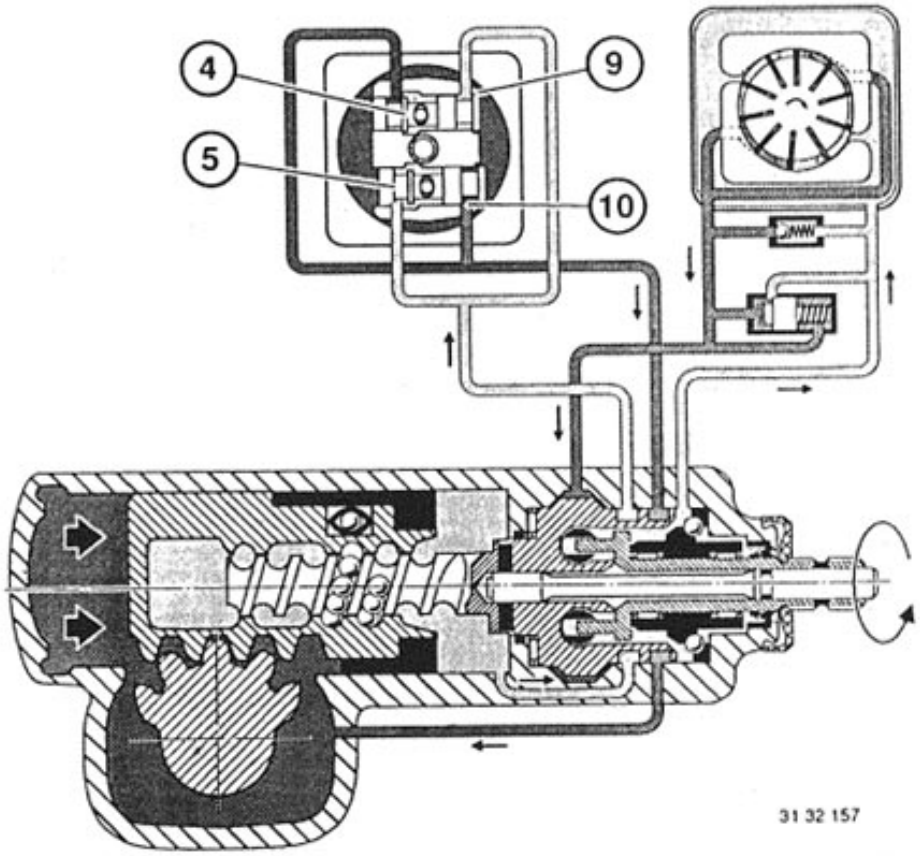

32 13 631 REPLACING RADIAL OIL SEAL FOR SECTOR SHAFT AND STEERING WORM AND SEALING INTERMEDIATE COVER – Power Steering Gear Removed –

Note:
Cleanliness is very important when working on steering gears.

Drain hydraulic fluid in steering gear.

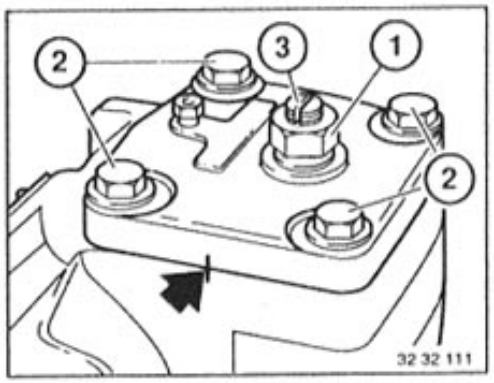

Mark position of cover to case.
Unscrew nut (1).
Unscrew bolts (2) and lift off cover by turning adjusting screw (3).

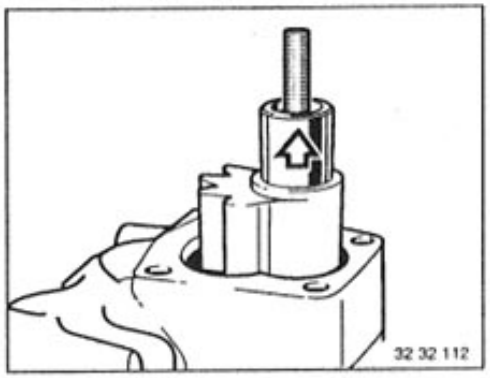

Pull sector shaft out of case.

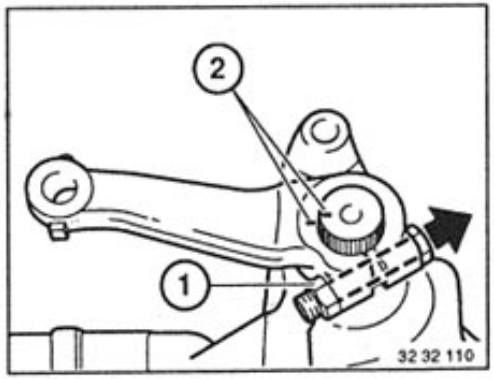

Mark position of sliding steering drop arm to sector shaft before unscrewing bolt (1) – if applicable, adjust steering drop arm – see 32 21 510.

Installation:
Slide on steering drop arm up to the mark – mark (2) must also be aligned.
Replace self-locking nut.
Tightening torque*.

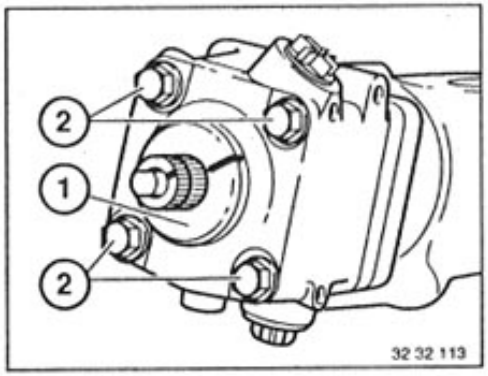

Pull off cap (1).
Unscrew bolts (2).

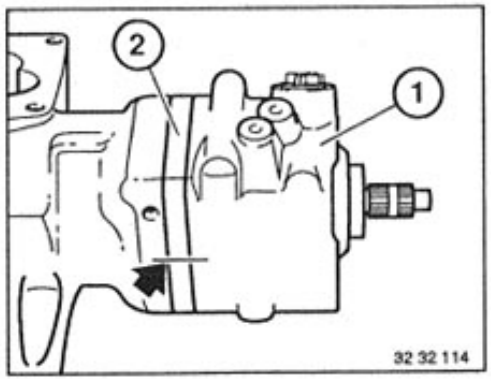

Mark position of valve housing (1) and intermediate cover (2) to case, and remove.

* See Specifications

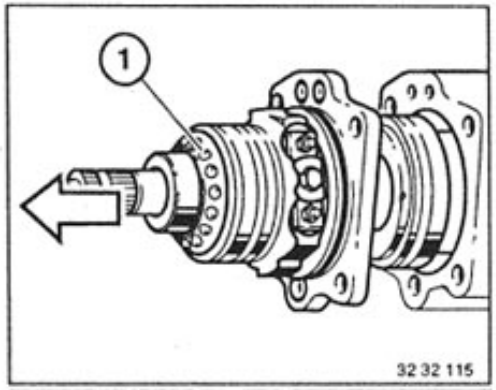

Take off ball bearing (1).
Pull out worm and piston.

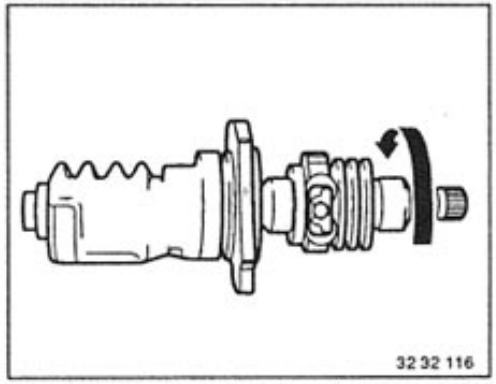

Unscrew worm clockwise.

Important!
23 loose balls.

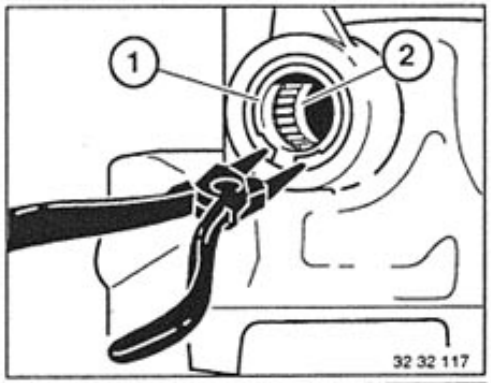

Lift out circlip.
Press out outer radial oil seal (1) and inner radial oil seal (2).

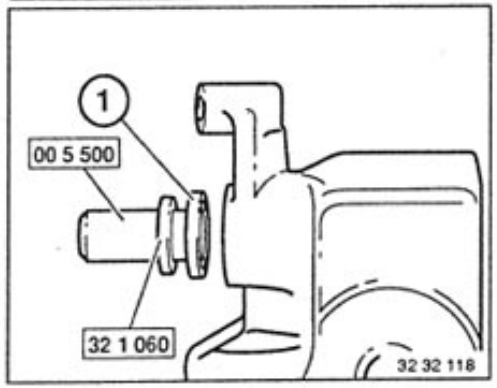

Lubricate sealing lips of radial oil seals with grease.
Drive in outer radial oil seal (1) that sealing lip faces inside of case with Special Tools 00 5 500 and 32 1 060.

Important!
Install circlip.

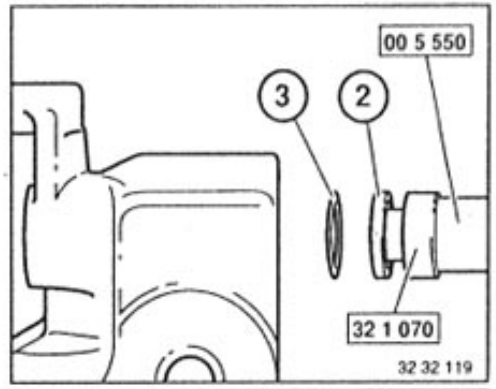

Insert support ring (3).
Drive in radial oil seal (2) that sealing lip faces inside of case with Special Tools 00 5 550 and 32 1 070.

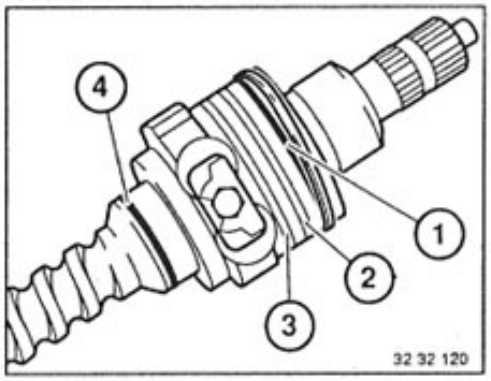

Replace seals (1 ... 3) and O-rings located underneath.
Replace O-ring (4).
Coat seals with hydraulic fluid*.

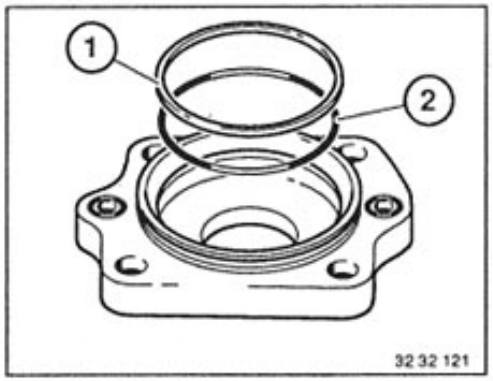

Replace seal (1) and O-ring (2) located underneath.
Coat seal with hydraulic fluid*.

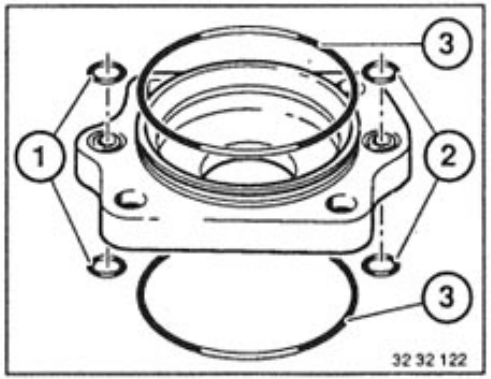

Replace O-rings (1 ... 3) on both sides.
Install O-rings (1 and 2) with grease.

* See Operating Fluids

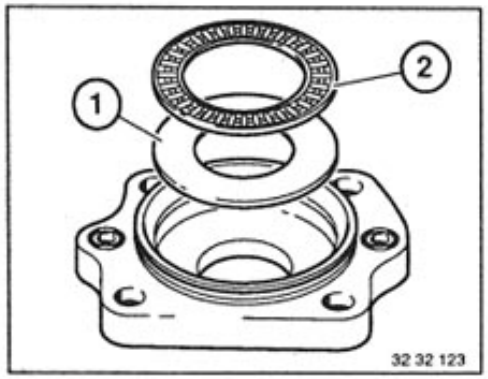

Place bearing ring (1) and axial bearing (2) in intermediate cover (with a small amount of grease).

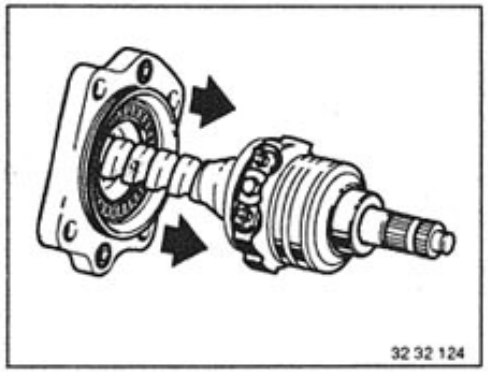

Mount intermediate cover on the worm head (do not damage seal of worm).

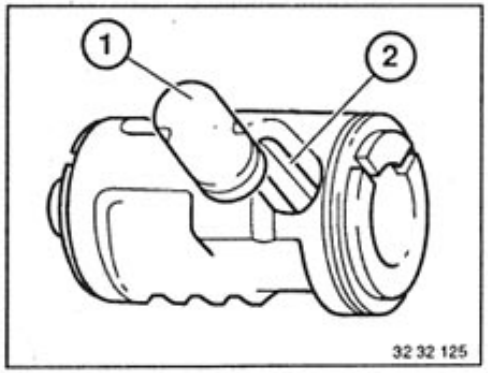

Pull off cap (1) and remove circulating pipe (2).

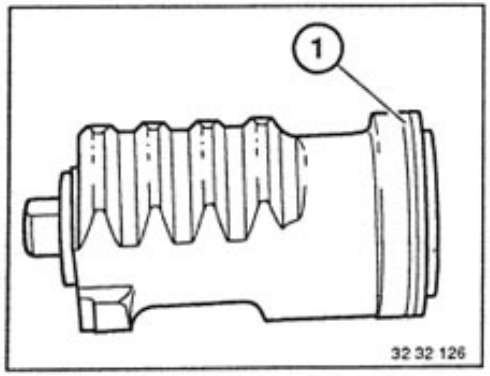

Replace seal (1) and O-ring located underneath.
Coat seal with hydraulic fluid*.

* See Operating Fluids

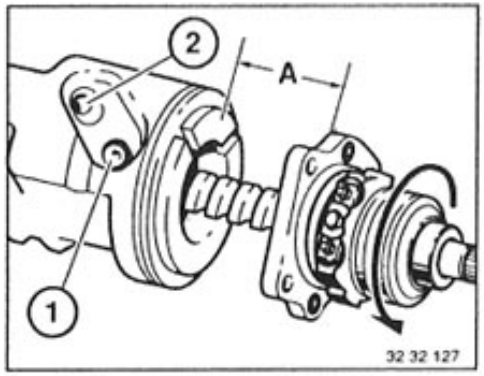

Slide worm head into piston.
A = about 6 cm (2.362").
Slide 16 balls into threads of worm through hole (1) and turn the worm until the balls are forwarded to hole (2).

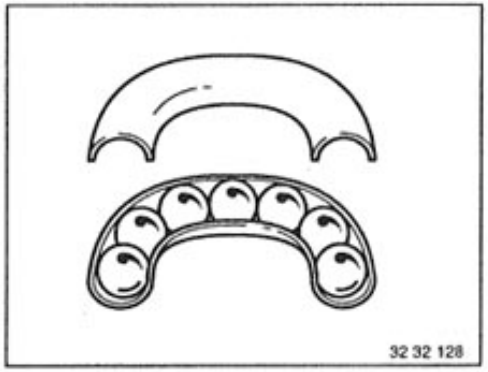

Install 7 balls in half of circulating pipe (grease both outer balls) and install circulating pipe in piston.

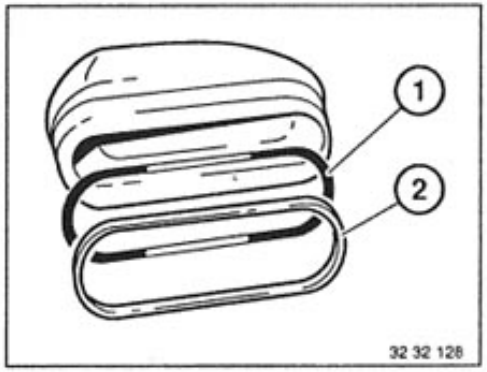

Place O-ring (1) and seal (2) in cap.
Press cap into piston.

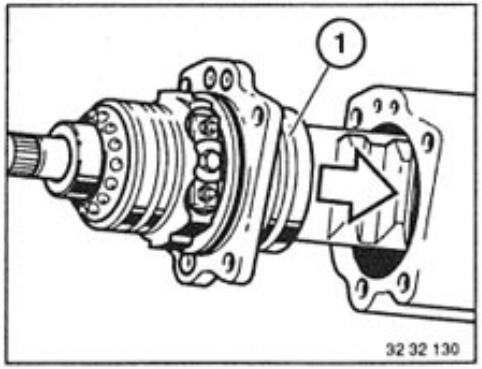

Slide piston into steering case, being careful not to damge seal (1).

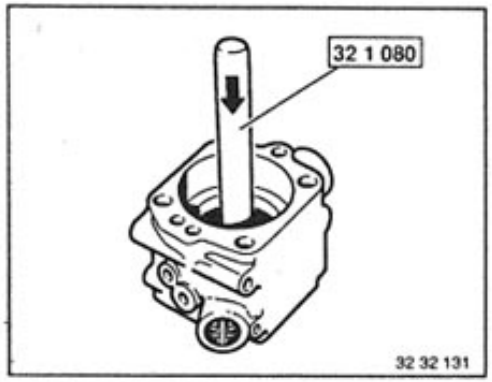

Replace radial oil seal (sealing lip greased) in valve housing with Special Tool 32 1 080.
Sealing lip faces inside of case.

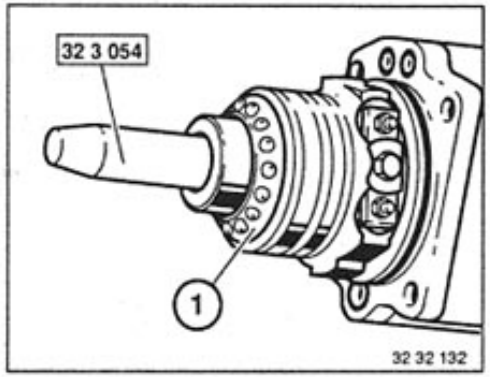

Install ball bearing (1) and Special Tool 32 3 054.

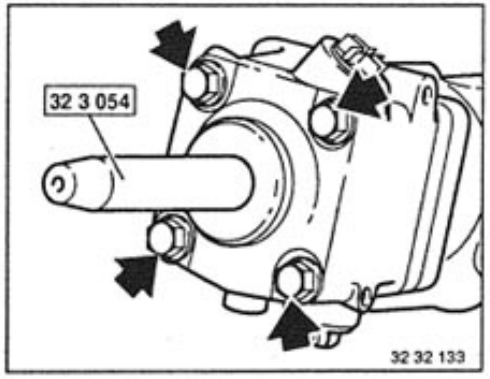

Slide valve housing over seals of worm head carefully and tighten bolts.
Tightening torque*.
S = washer
Remove Special Tool 32 3 054.

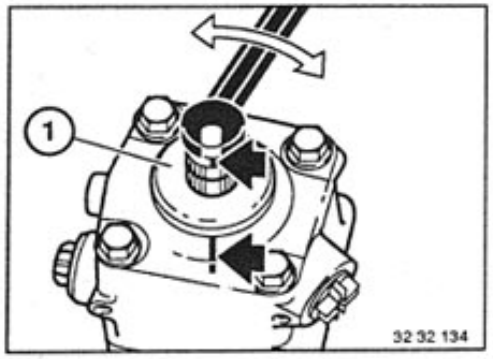

Turn steering to a final position.
Turn back about 2 turns until marks on spindle and case are aligned = straight ahead position.
Press grease-filled cap (1) on spindle.
Marks on spindle, cap and case must be aligned.

* See Specifications

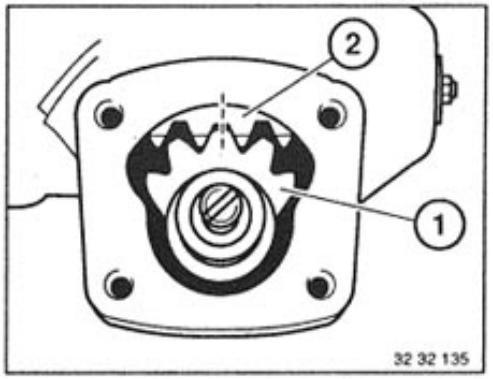

Guide in sector shaft (1) carefully that radial oil seal is not damaged.
Center tooth of sector shaft (1) must be in middle of teeth of piston (2).

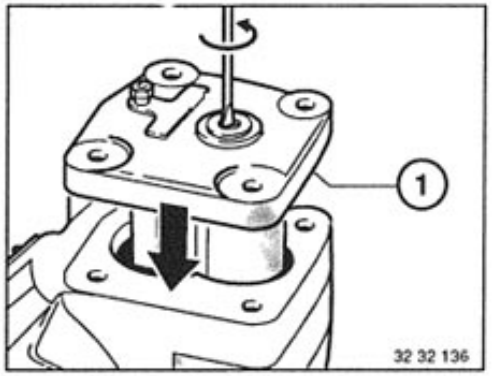

Replace O-ring (1) in cover.
Position cover by turning the adjusting screw on the case counterclockwise.

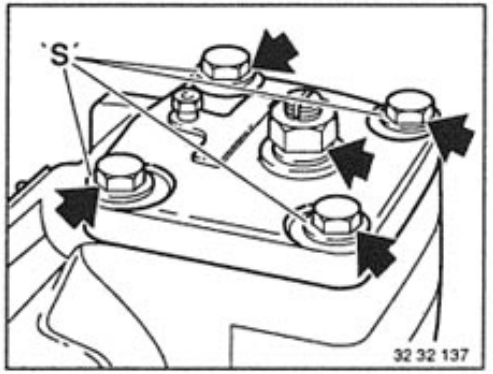

Tighten cover bolts.
Tightening torque*.
S = washer
Tighten lock nut – sealing surface facing cover – finger tight.

* See Specifications

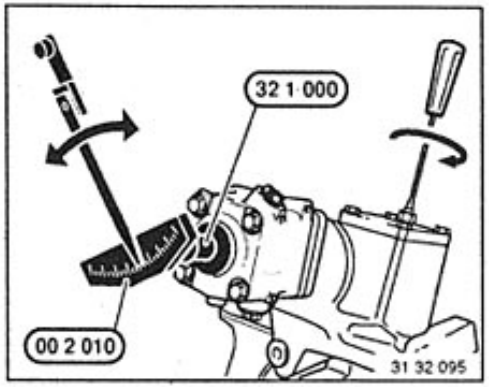

Adjusting Pressure Point:
Mount Special Tool 32 1 000 on the spindle and apply friction torque tester 00 2 010.
Measure friction torque about 1/2 turn before reaching final lock.
Move steering gear to straight ahead position.
Turn adjusting screw until a friction torque 0.4 to 0.6 Nm (0.3 to 0.4 ft. lbs.) higher than the previously measured friction torque is measured while "passing" the pressure point.
Total friction torque must not exceed 1.4 Nm (1 ft. lbs.).
Tighten locknut with a tightening torque of 25 Nm (18 ft. lbs.).
Recheck friction torque.

Install steering drop arm.
Check function after installation of the steering gear.

TROUBLESHOOTING POWER STEERING

Condition	Cause	Correction
Steering is hard to turn left or right from center	Pressure point adjusted too tight	Adjust pressure point
Steering runs automatically to final position onesidedly	Valve setting for hydraulic center incorrect	Replace steering gear (adjustments can only be made in the factory)
Excessive steering wheel play	a) Steering gear loose on front axle carrier b) Universal joints have excessive play c) Joint disc loose d) Tie rod ends worn e) Play between worm and piston f) Worm has axial play g) Insufficient oil in system	a) Tighten steering gear b) Replace universal joints c) Tighten joint disc d) Replace tie rod ends e) Replace steering gear f) Replace steering gear g) Add oil*; bleed hydraulic system - see 32 13 006
Steering wheel shakes	a) Imbalance or radial runout of wheels b) Toe, camber, caster or king pin inclination incorrect c) Thrust strut bent d) Rubber mount for thrust strut faulty e) Control arm bent f) Weak shock absorbers g) Bearing sleeve in steering guide arm faulty	a) Balance wheels; replace rims and/or tires in case of radial runout b) Check/adjust front wheel alignment with optical tester c) Replace thrust strut d) Replace rubber mount e) Replace control arm f) Replace shock absorbers g) Replace bearing sleeve
Steering difficult to move against left or right lock	a) Pressure does not build up in lower chamber b) Pressure does not build up in upper chamber c) Insufficient oil in system d) Control valve in power pump seized e) Filter clogged f) Valve piston seized or leaks g) Piston seal damaged h) Teflon rings in worm head leak i) Teflon ring in intermediate cover leaks k) System filled with strong foaming, unsuitable oil	a) Replace steering gear b) Replace steering gear c) Add oil*; bleed hydraulic system - see 32 13 006 d) Replace power steering pump e) Replace filter and clean pipes f) Replace steering gear g) Replace steering gear h) Replace steering gear i) Replace steering gear k) Fill hydraulic system with specified oil*
Loss of hydraulic fluid	a) Hose connection leaks b) Oil tank seal leaks c) Radial oil seal for sector shaft faulty d) Radial oil seal for steering spindle leaks e) O-ring in cover leaks f) O-rings in intermediate cover leak	a) Tighten hose connections or replace hoses b) Replace seal c) Seal steering gear d) Seal steering gear e) Seal steering gear f) Seal steering gear
No straight ahead	Height of steering drop arm not correct	Adjust steering drop arm - see 32 21 520

* Refer to Specifications

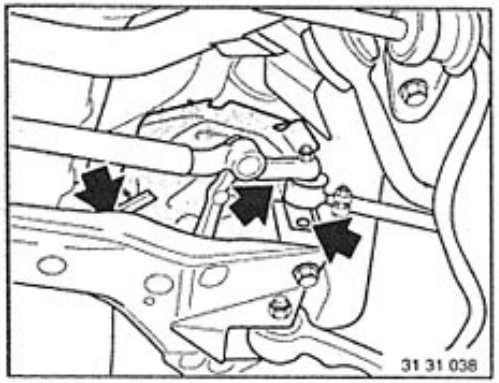

32 21 080 Removing and installing idler arm

Remove heat shield.

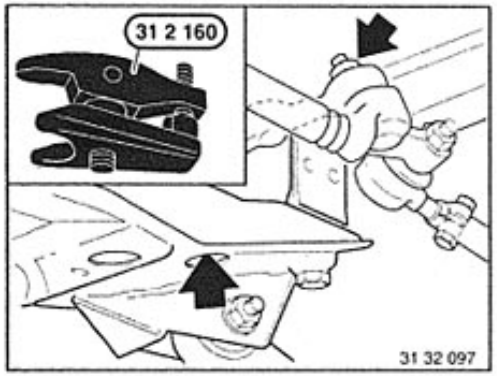

Unfasten nut and press off ball joint with special tool 31 2 160.
Remove idler arm.

Installation:
Bore and taper free of grease. Replace self-locking nut.
Tightening torque 32 21 3AZ*.

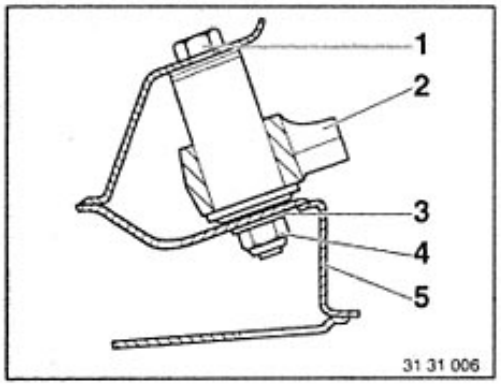

Installation:
Replace self-locking nut.
Tightening torque 32 21 7AZ*

1 Screw
2 Idler arm
3 Washer
4 Self-locking nut
5 Front axle carrier

Caution!
If the idler arm is replaced, check/adjust alignment of the pitman arm 32 21 510.

* Refer to Technical Data

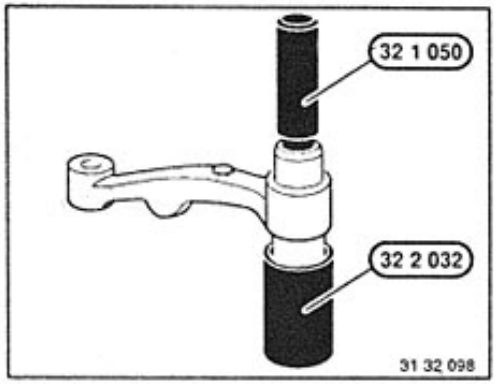

31 21 091 REPLACING DAMPER FOR STEERING GUIDE ARM

Remove steering guide arm – see 32 21 080.
Press out damper with Special Tools 32 1 050 and 32 2 032.

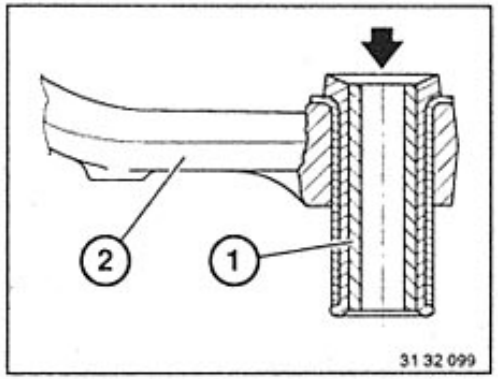

Note pressing-in direction.
1 = Damper
2 = Steering guide arm.

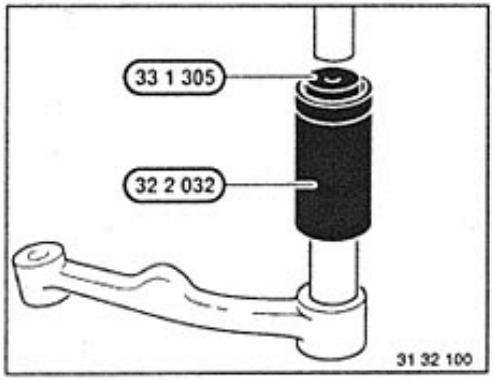

Press in new damper against the stop with Special Tools 33 1 305 and 32 2 032.

Important!
Adjust steering drop arm after installation – see 32 21 510.

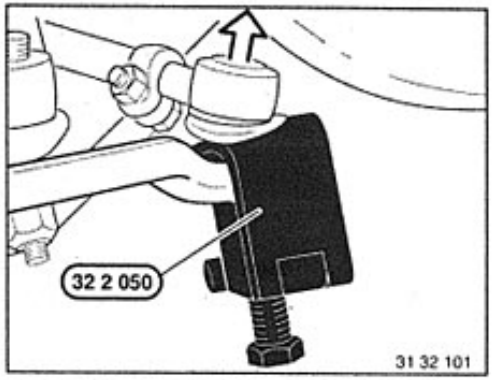

32 21 101 Replacing left or right tie rod lever

Remove front wheel, see Gr. 36.
Unfasten nut.
Press ball joint off tie rod lever with special tool 32 2 050.

Installation:
Bore and taper free of grease.
Tightening torque 32 21 3AZ*.
Replace self-locking nut.
Perform front wheel alignment check 32 00 . . .

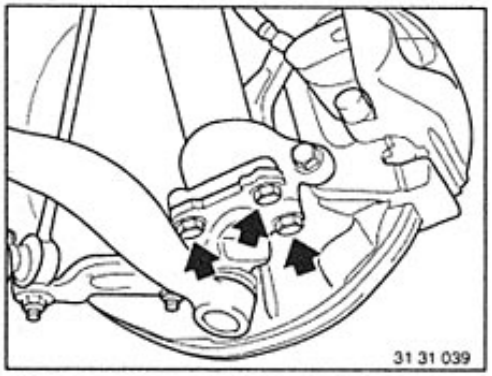

Unfasten screws.

Installation:
Clean thread of bores and screws.
Secure screws with screw cement**.
Tightening torque 32 21 9AZ*.

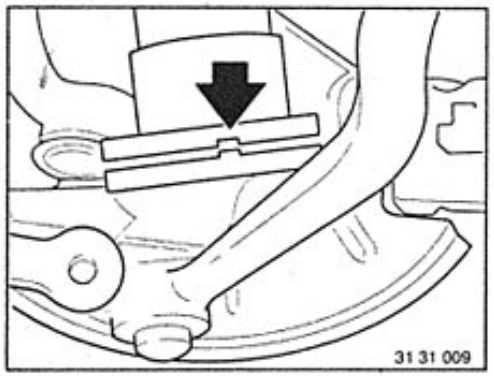

Ensure unit is correctly installed.

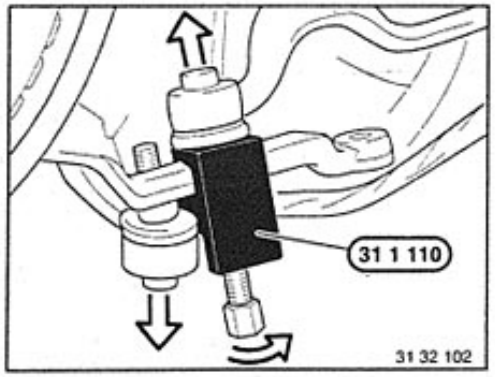

Unfasten nut from control arm and traction strut.
Press off ball joint with special tool 31 1 110.

Installation:
Remove grease from bore and taper.
Replace self-locking nut.
Tightening torque 32 21 9AZ/11AZ*

* Refer to Technical Data
** Source of Supply: BMW Parts Service

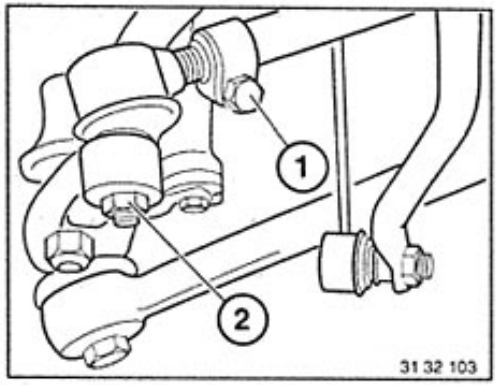

32 21 151 Replacing left or right track rod end

Remove front wheel, see Gr. 36.
Unfasten clamping screw (1).
Unfasten nut (2).

Installation:
Remove bore and taper. Replace self-locking nut.
Tightening torque 32 21 3AZ/4AZ*.
Perform front axle alignment check 32 00 . . . .

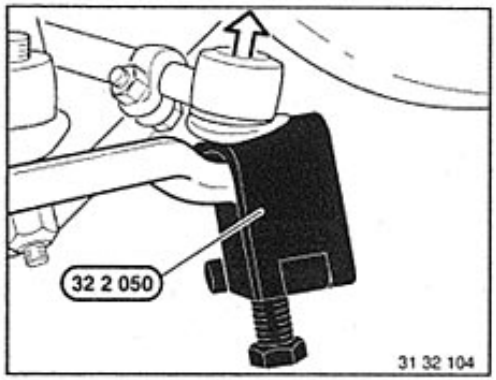

Press off ball joint using special tool 32 2 050.

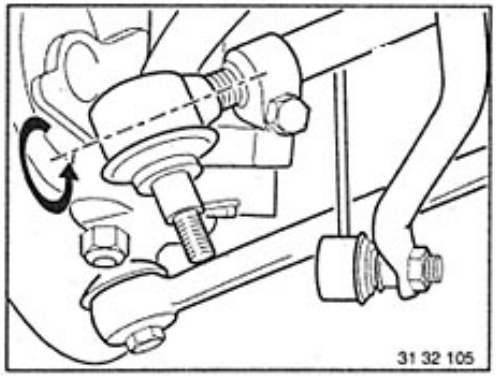

Unscrew and remove track rod end.

* Refer to Technical Data

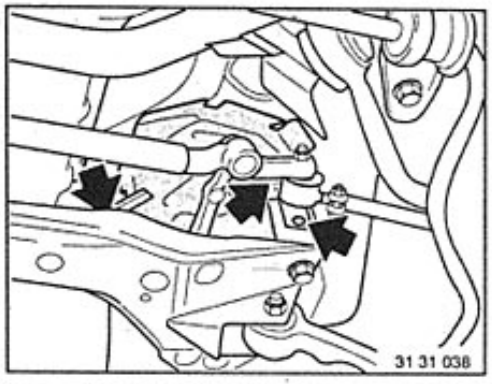

32 21 281 Replace center track rod

Remove heat shield from right side.

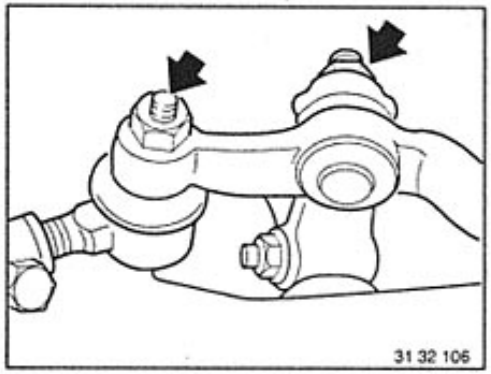

Unfasten nut on left and right sides.

Installation:
Remove grease from bore and taper.
Replace self-locking nut.
Tightening torque 32 21 3AZ*.
Adjust pitman arm 32 21 510.
Perform alignment check of front axle 32 00 . . . .

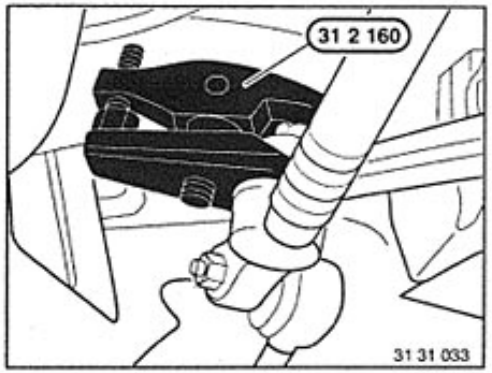

Press center track rod off pitman arm and idler arm using special tool 31 2 160.

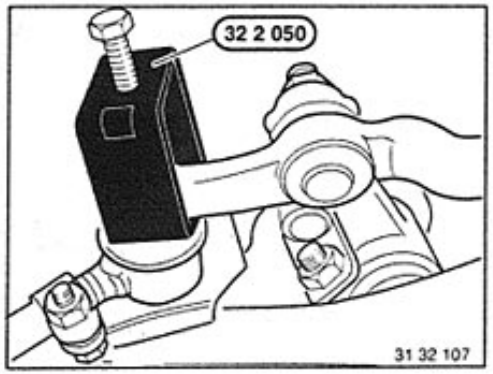

Press off lateral track rods using special tool 32 2 050.

* Refer to Technical Data

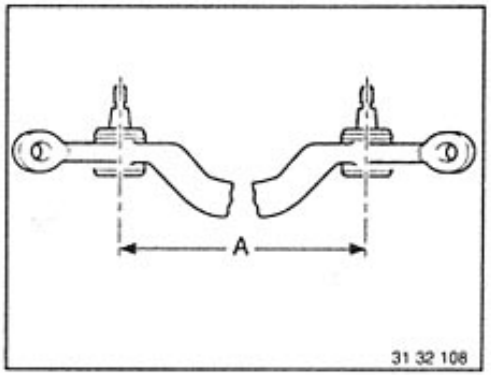

Inspection dimension A = 534 ± 1 mm.

32 21 500 REMOVING AND INSTALLING STEERING DROP ARM
– Steering Gear Removed –

Mark position of sliding steering drop arm on the sector shaft prior to unscrewing bolt (1).
If necessary, adjust steering drop arm – see 32 21 510.

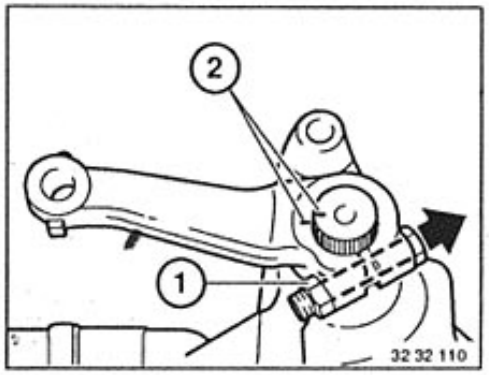

Installation:
Slide on steering drop arm up to the mark, whereby marks (2) must also be aligned.
Replace self-locking nut.
Tightening torque*.

* See Specifications

32 21 510 ADJUSTING STEERING DROP ARM

Adjusting the steering drop arm moves the left and right tie rods to correct height. This guarantees the same amount of toe on left and right wheels when the car's suspension is bottomed.
It also optimizes directional stability on rough road surfaces.

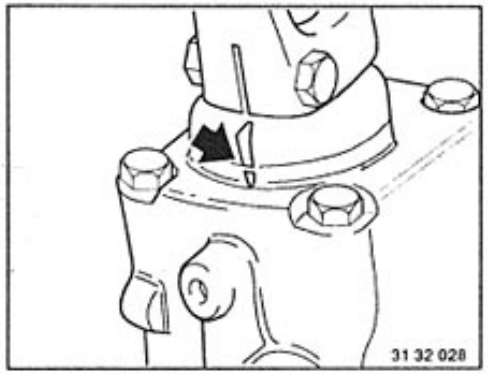

Set steering gear to straight ahead position (marks on spindle and case aligned).

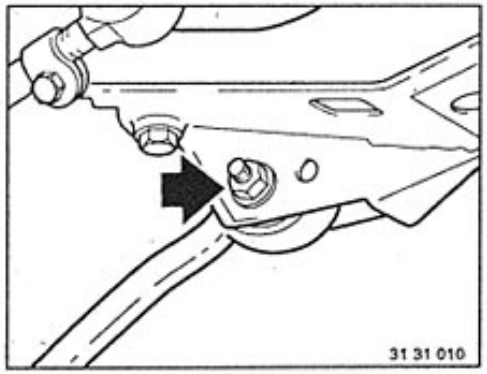

Unscrew left and right control arms on front axle carrier.

Installation:
Replace self-locking nuts.
Tightening torque*.

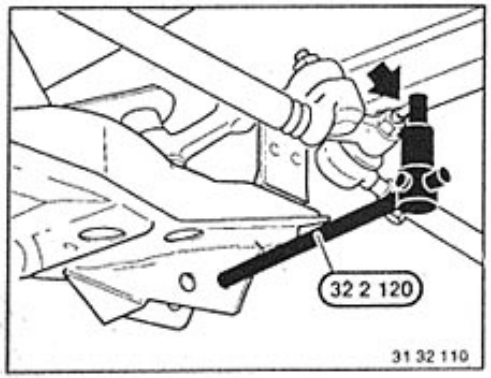

Mount Special Tool 32 2 120 on the side of the steering guide arm on the control arm mount.
Align the master mandrel with the centering bore in the pivot pin and clamp.

* Refer to Specifications

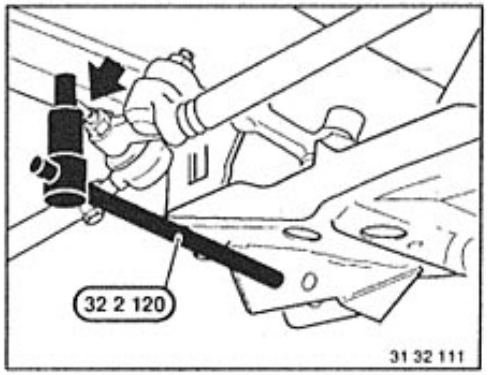

Mount the special tool on the other side — without changing the master mandrel.

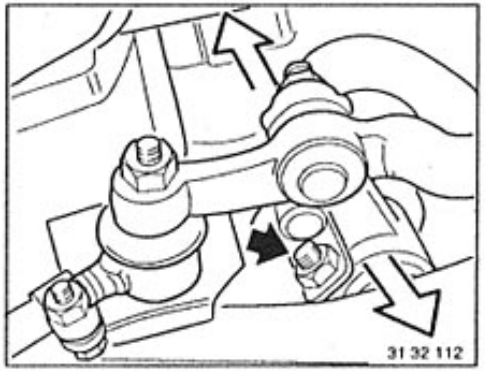

Loosen bolt.
Move the steering drop arm until the centering bore is aligned with the master mandrel as precisely as possible; max. permissible deviation = ± 1.5 mm.
Tighten nut to correct tightening torque*.
Repeat the measurement, if necessary.

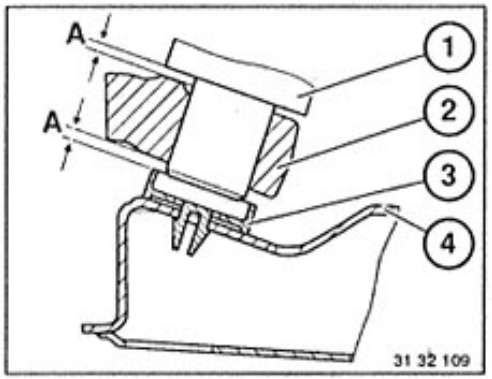

Important!
Turn steering gear from stop to stop — steering drop arm must move easily.

Distance A = 0.5 mm.

1 Steering gear
2 Steering drop arm
3 Spacer
4 Front axle carrier

* Refer to Specifications

32 31 082 Removing and installing or replacing steering angle sensor

Disconnect battery, refer to Gr. 61
Remove lower trim from instrument panel, refer to Gr.51
Remove airbag steering wheel 32 33 000.

Caution!
On vehicles with
Electronic Damper Control or
Active Rear Axle Kinematics (AHK) or
Dynamic Stability Control,
a "steering angle adjustment "must be conducted after assembly using the BMW Sevice Tester.

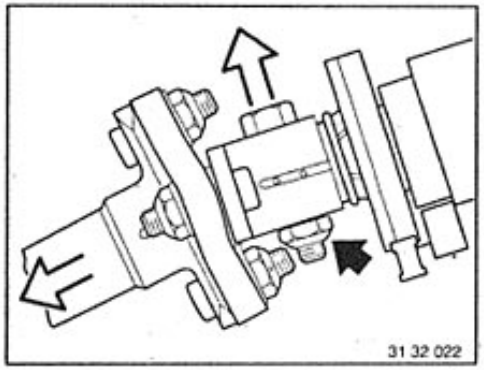

Remove clamping screw.
Press steering spindle downwards.

Installation:
Clamping screw is located in retaining groove of steering spindle.
Replace self-locking nut.
Tightening torque 32 31 1AZ *.

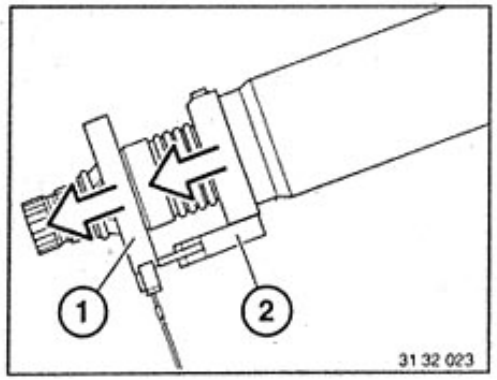

Remove steering angle sensor (1) from steering spindle.

Installation:
The pin on the steering angle sensor (1) must locate in the rotary fixture (2).

*Refer to Technical Data

32 31 090 Removing and installing complete steering column

Disconnect ground lead from battery.
Remove steering wheel 32 33 000.
Remove lower trim from instrument panel, refer to Gr. 51.

Caution!
On vehicles with
Electronic Damper Control or
Active Rear Axle Kinematics (AHK) or
Dynamic Stability Control,
a "steering angle check" must be performed using the BMW Sevice Tester.

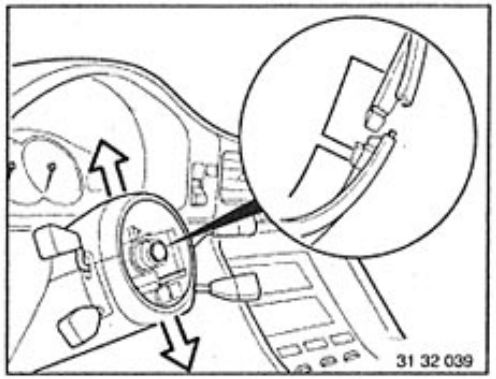

Remove lower section of steering column trim from upper section
If necessary, unscrew and remove cable from interlock.

Installation:
Check that locking fixture is correctly seated.

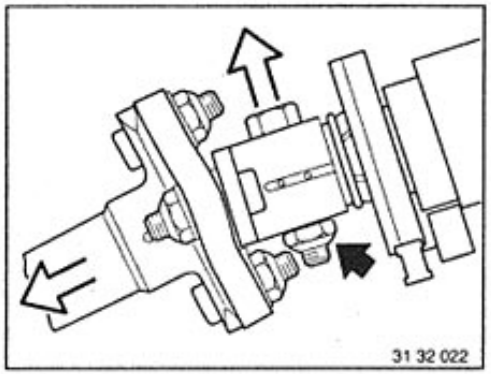

Remove clamping screw.
Press steering spindle downwards.

Installation:
Clamping screw is located in retaining groove of steering spindle.
Replace self-locking nut.
Tightening torque*.

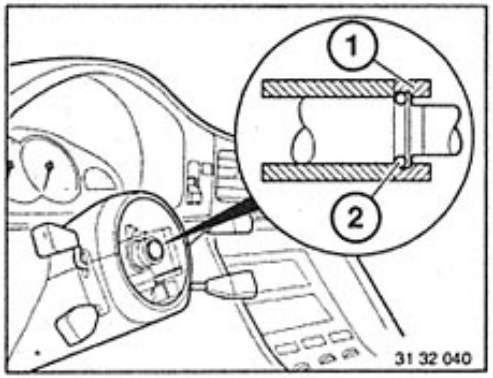

Remove end collar (1).

Installation:
Note position of end collar (1) relative to sna ring (2).

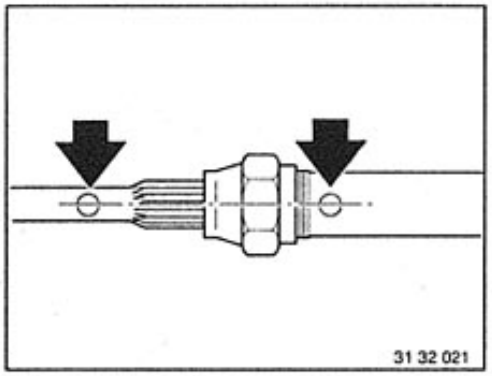

Note:
Allocation of gear teeth marked with spot of paint.
Adjusting nut tightened down to point that displacement force equals 40 ± 25 N.

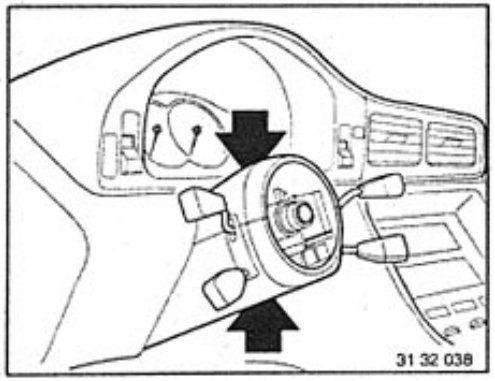

Unfasten screws.

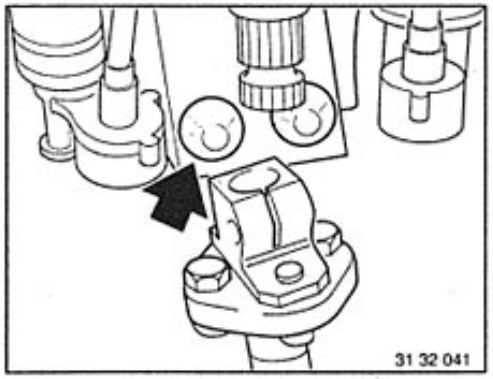

Unfasten tear-off screw with chisel or mill off screw head.

Installation:
Fit spacer tube.
Tighten down tear-of screws to tearing point.

* Refer to Technical Data

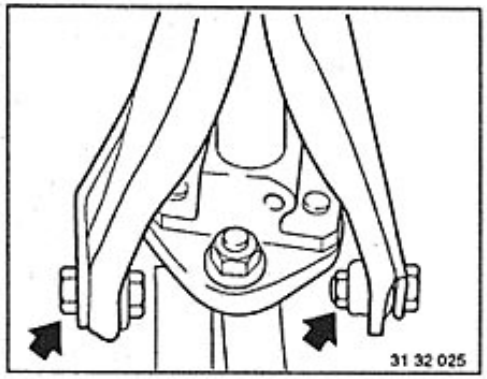

Installation:
1 Lever (left, right)
2 Sliding cover
3 Steering column slide
4 Rubber mount
5 Washer
Replace self-locking nuts.
Tightening torque*.

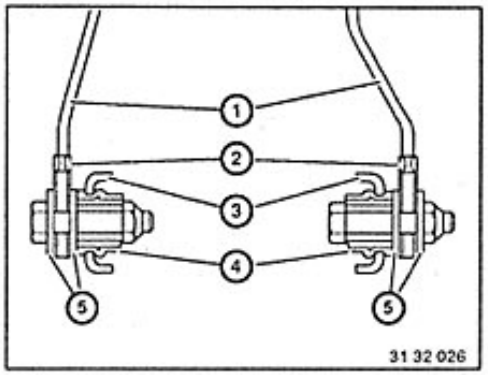

Remove instrument cluster – see Group 62.
Loosen bolts.

Installation:
Hooks of the steering column must be located in guide sleeves (1).
Pull steering column up and tighten the bolts.
Tightening torque*.

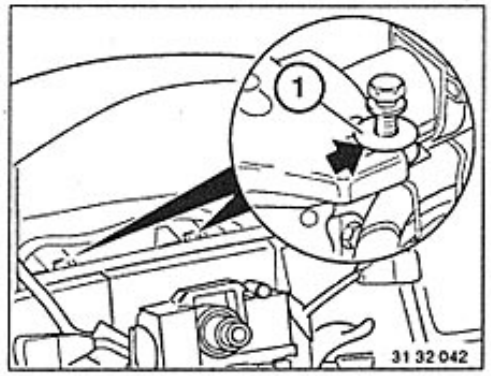

Pull off plugs on potentiometers.
Discoonect all wires leading to the steering column on the plugs.
Press down and remove steering column.

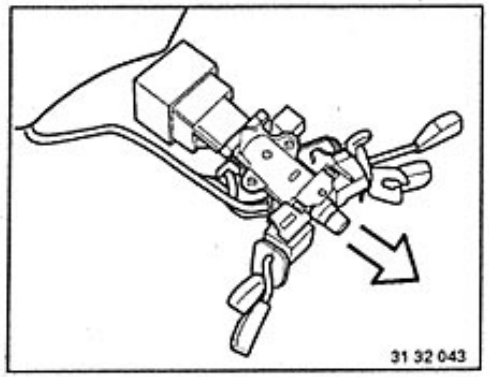

* See Specifications

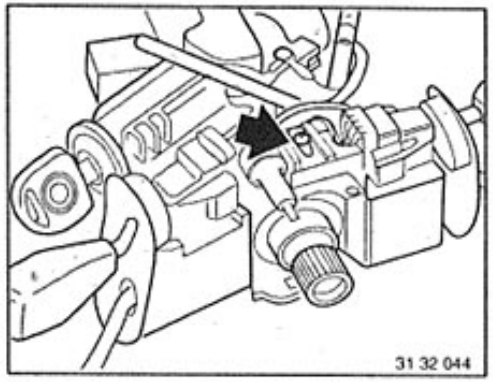

32 31 595 Dismantling and assembling complete steering column

Remove steering column 32 31 090.

Unfasten screw.

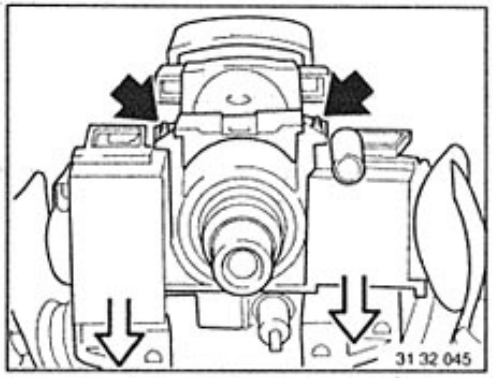

Press locking hook and remove switch.

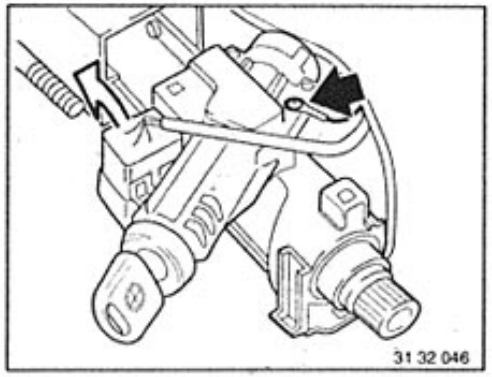

Remove ground cable.
Turn relay base and remove.

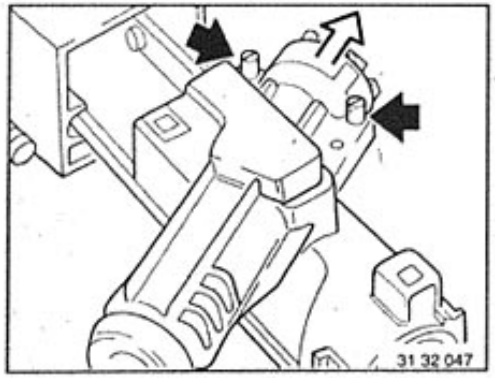

Unfasten both Maden screws.

Installation:
Secure Maden screws with paint.

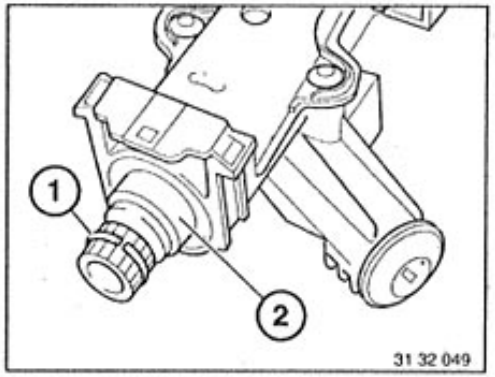

Lift out snap ring (1) and remove with bush (2).

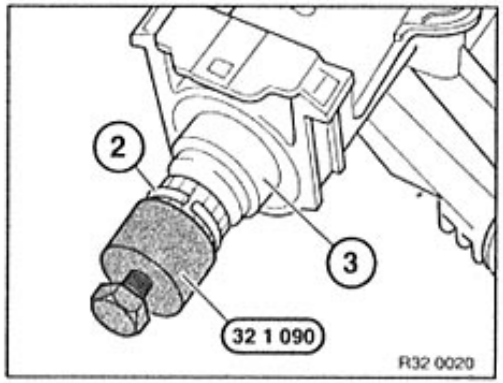

Installation:
Fit bush (3).
Tighten down snap ring (2) with special tool 32 1 090 and steering wheel retaining screw until they engage in groove.

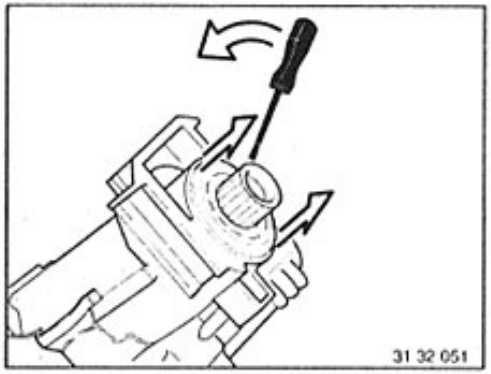

Lift out and remove steering spindle bearing.
Remove inner steering sleeve.

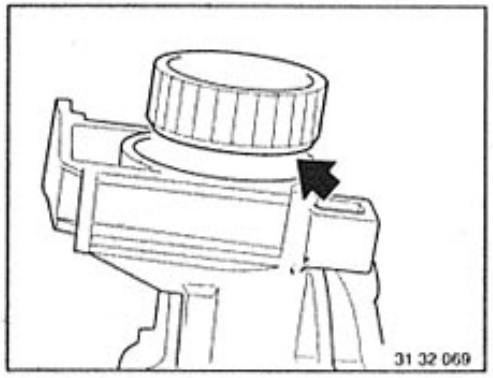

Installation:
Install bearing sleeves with the tapered side facing the steering lock.

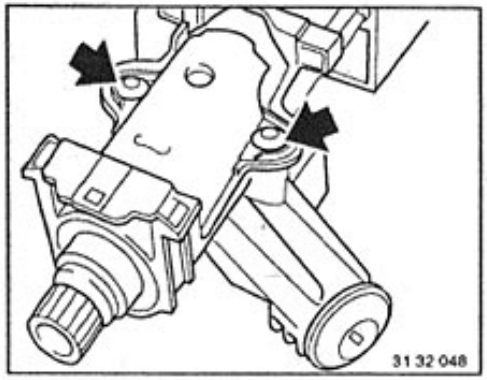

Remove shear-off bolts.

Installation:
Tighten Torx bolts until they shear off.

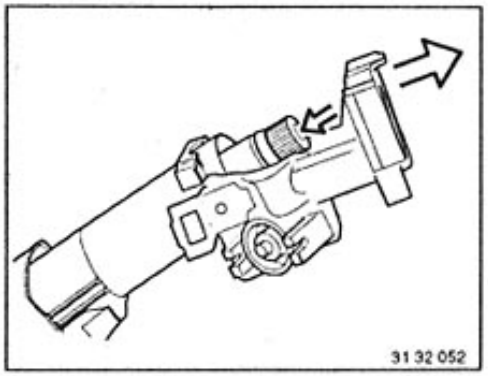

Turn steering lock to "R" position.
Press down on steering spindle and remove the steering lock.

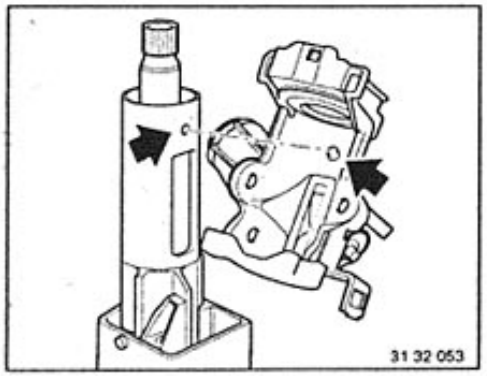

Installation:
Dowel pin must be in the bore.

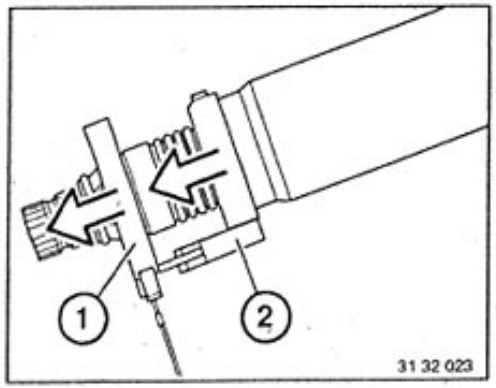

Pull steering angle sensor (1) off of the steering spindle.

Installation:
Pin of steering angle sensor (1) must fit in turning lock (2).

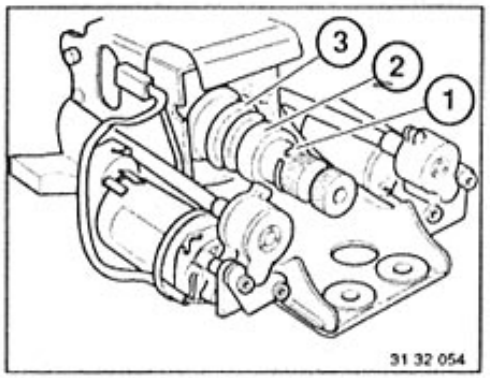

Lower Steering Spindle Bearing:
Lift out circlip (1) and remove collar (2) and spring (3).
Take off steering spindle.

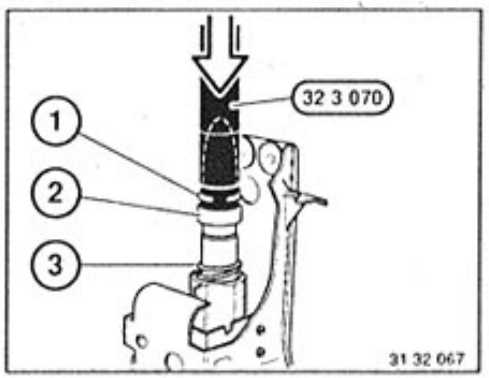

Installation:
Mount spring (3) and collar (2).
Recess in the collar must face the circlip.
Install circlip (1) with Special Tool 32 3 070.

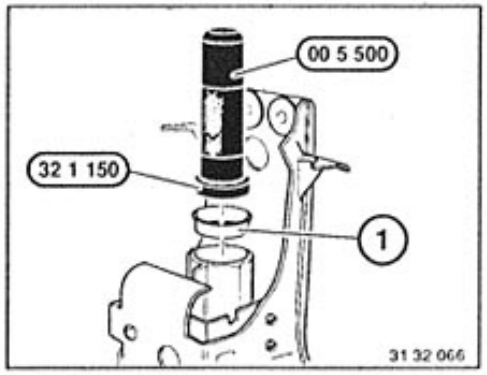

Knock lower steering spindle bearing out of the outer sleeve.

Installation:
Press contact ring out of the new bearing.
Drive in new bearing (1) with Special Tools 32 1 150 and 00 5 500.

Important!
Press contact ring – for horn ground – into the bearing again.

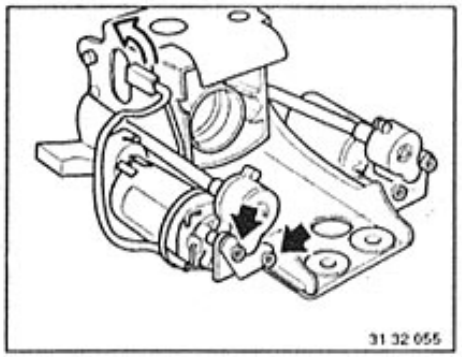

Unscrew screws.
Turn plug out of the holder.
Take off gearbox motor.

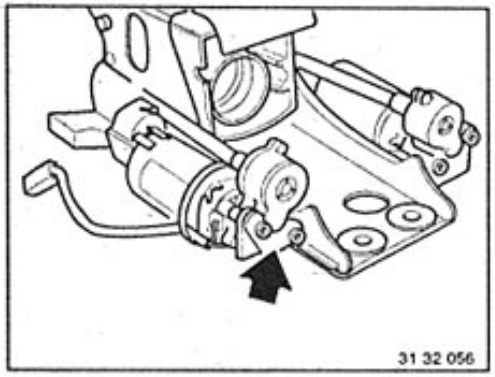

Installation:
If applicable, use washer.

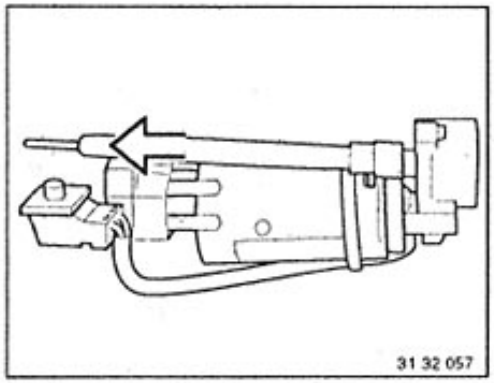

Pull off shaft.

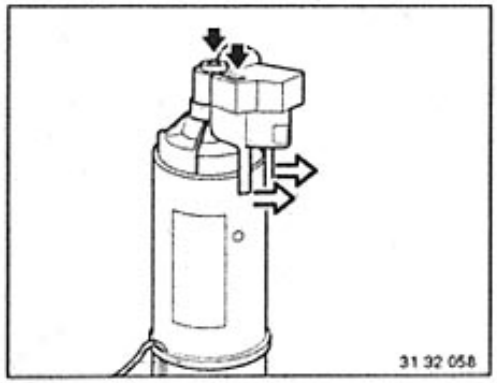

Unscrew screws, press hooks towards outside and take off potentiometer.

Mechanical Steering Column Adjustment:
Unbend lockplates (5).
Unscrew bolts (1 ... 3).
Bolt (1) = left-hand threads.

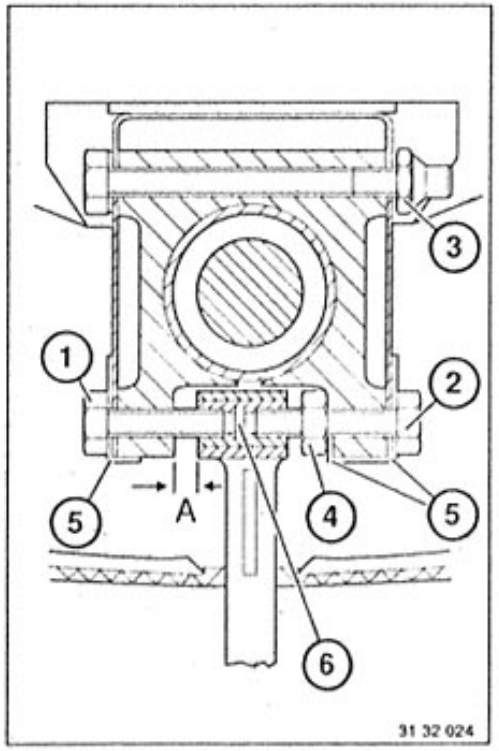

Assembling Procedures (Note Order):

1. **Screw in left M 8 x 32 bolt (1) together with lockplate (5) – tightening torque = 15 Nm.**
   Distance A between lever and clamp = 6 ± 1 mm.
2. **Screw in M 8 x 40 bolt (2) together with lockplate (5) and nut (4) – tightening torque = 7 Nm.**
3. **Tighten nut (4) – tightening torque = 15 Nm.**
4. **Tighten hexagon nut (3) – lever (6) in "CLOSED" position.**
   Tightening torque = 15 Nm.
5. **Bend lockplate (5).**

32 31 800 REPLACING CONTROL UNIT FOR ELECTRIC STEERING COLUMN CONTROL

Remove multi-information display – see Group 65.

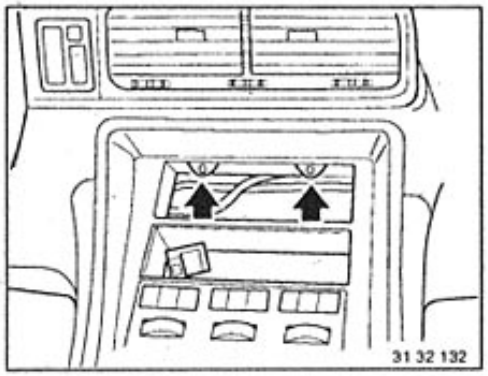

Unscrew screws.

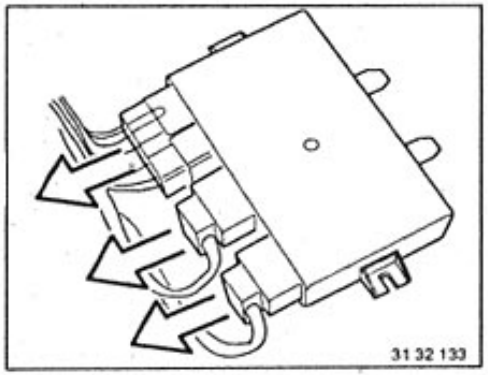

Pull out control unit and pull off plugs.
Transfer holder.

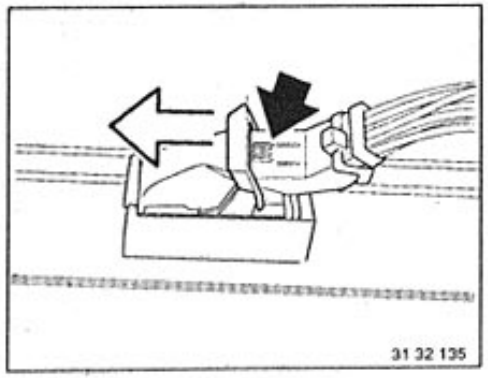

Important!
Press down on retainer and lift lever.

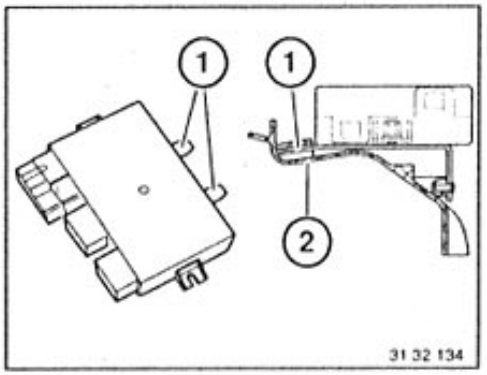

Installation:
Tabs (1) must be located in slots (2) of the heater housing.

32 32 001 REPLACING COMPLETE STEERING LOCK

Set steering column to "lowered" and "run out" position.
Disconnect battery ground lead.
Remove steering wheel – see 32 33 000.
Remove bottom dashboard trim panel – see Group 51.

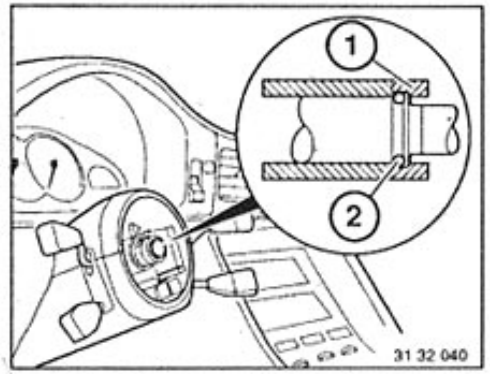

Take off collar (1).

Installation:
Recess in collar (1) must be above circlip (2).

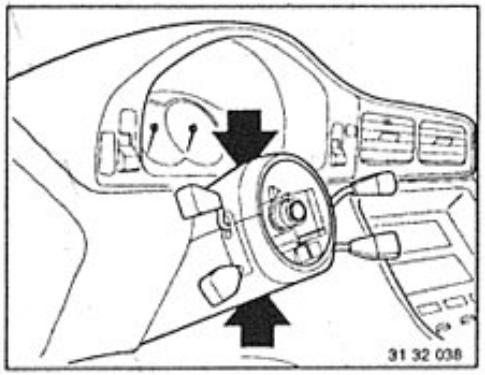

Unscrew screws.

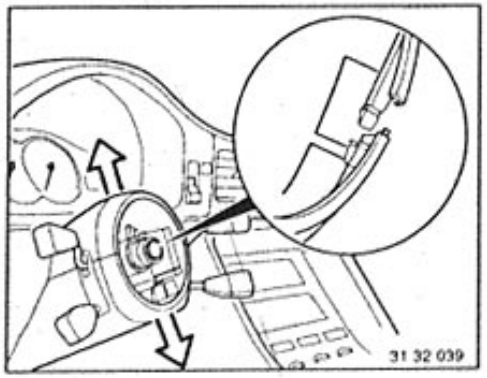

Pull lower steering column casing section off of the upper section.

Installation:
Check for correct seating of the lock.

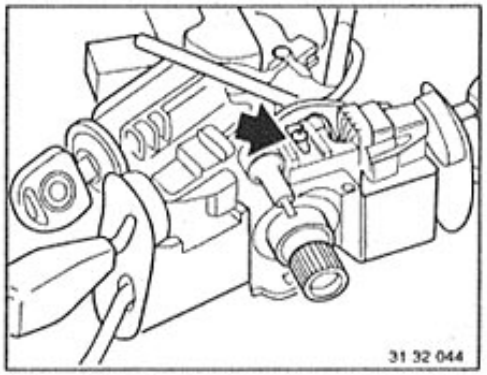

Remaining procedures are shown on a removed steering column for better understanding.

Unscrew screw.

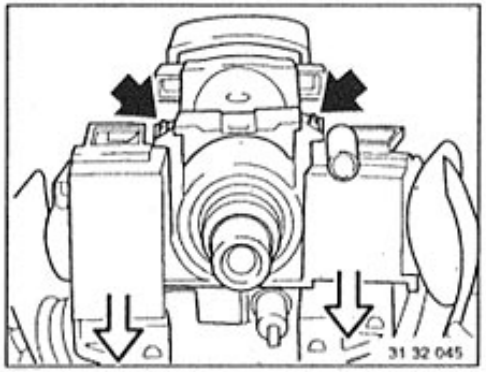

Compress retainers and pull off switch.

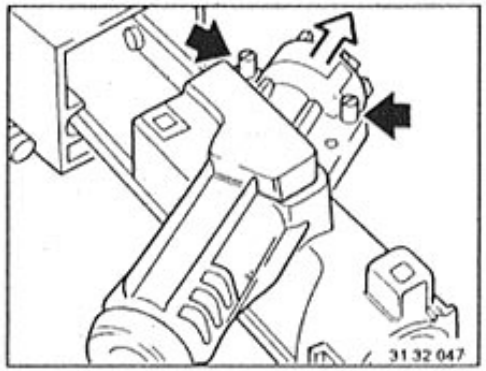

Unscrew both setscrews.

Installation:
Lock setscrews with paint.

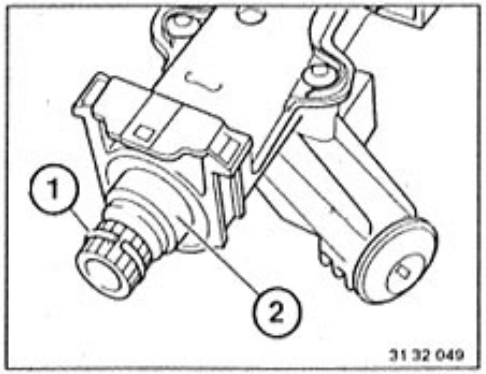

Lift out and remove circlip (1) with sleeve (2).

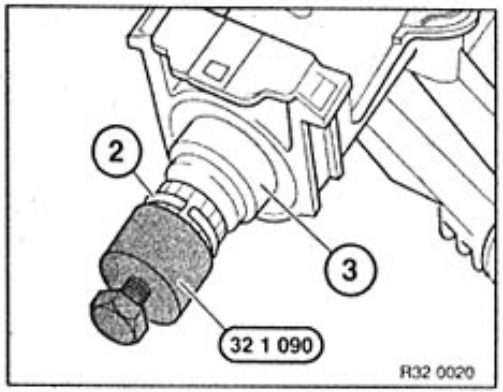

Installation:
fit bush (3).
Draw snap ring (2) with special tool 32 1 090 and steering wheel retaining screw firmly home in groove.

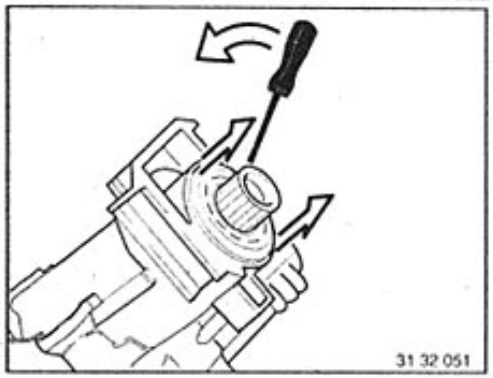

Lift out and remove steering spindle bearing.
Remove inner steering sleeve.

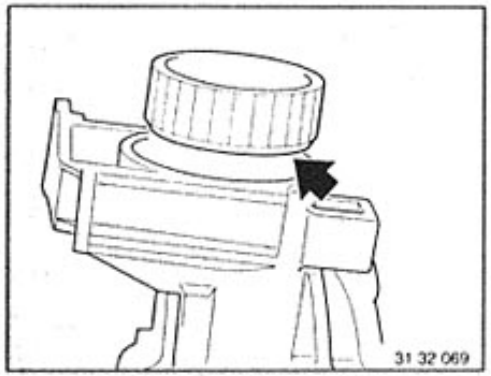

Installation:
Install bearing sleeves with the tapered side facing the steering lock.

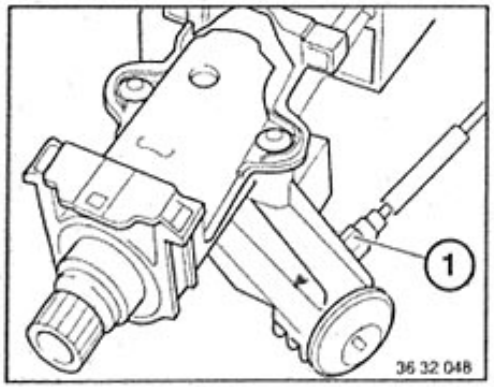

If necessary, unscrew and remove cable (1) from interlock.

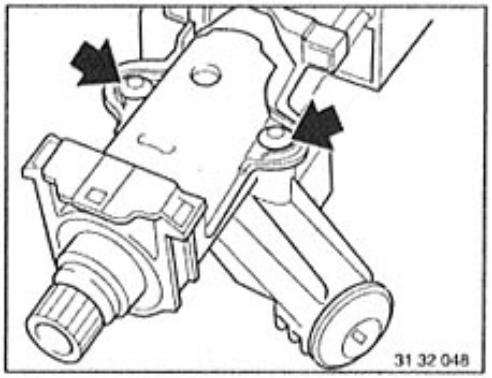

Unfasten tear-off screws.

Installation:
Tighten down Torx threaded dowels until they tear off.

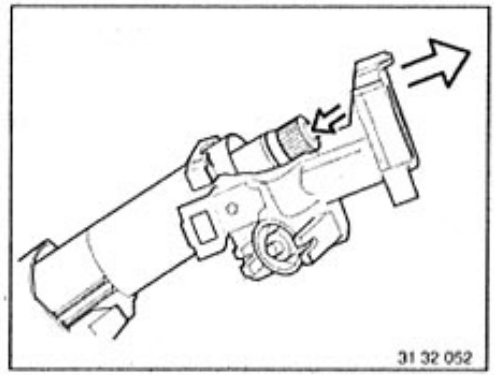

Rotate steering lock into position "R".
Press steering spindle downwards and remove steering lock.

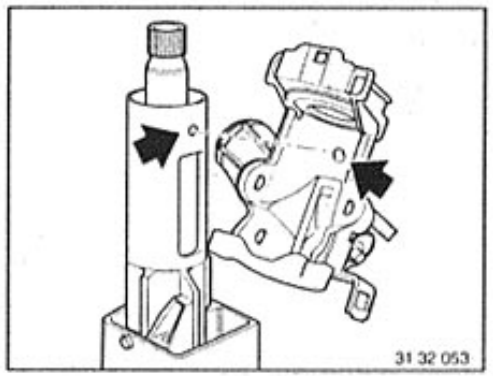

Installation:
Reamed bolt must locate in bore.

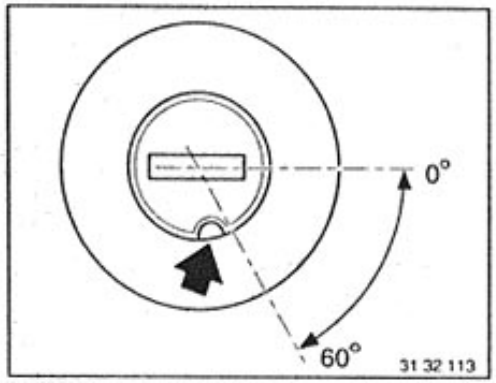

32 32 050 Removing and installing or replacing steering lock cylinder

Using ignition key, move lock cylinder into position "R" = 60°.

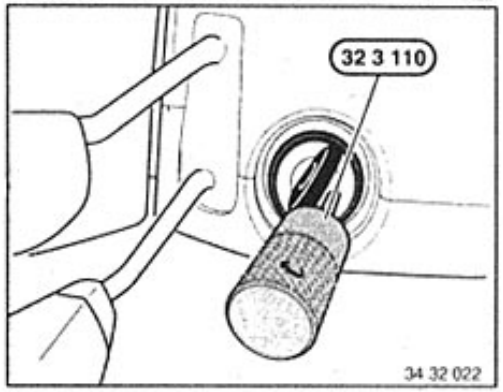

Press special tool 32 3 110 or a piece of Ø 1.2 mm wire into bore of lock cylinder and pull out lock cylinder.

32 32 170 Removing and installing or replacing interlock cable

Caution!
After fitting interlock, check function, refer to 25 16 ... Repair Instructions for 3 Series E36.

Remove shift lever cover and unfasten interlock cable from shift tower
Secure new interlock cable to existing cable with wire or similar material

Installation:
Adjusting interlock cable, refer to 25 16 ... Repair Instructions 3 Series E36.
Tightening torque 8 Nm.

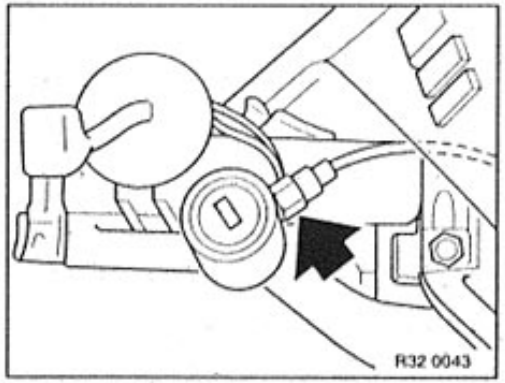

Remove lower section of steering column trim
Unfasten interlock cable on steering lock and remove, inserting new interlock cable at the same time.

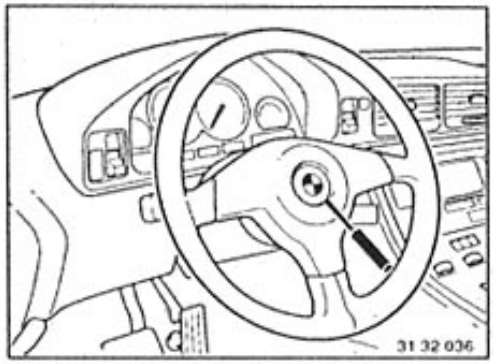

32 33 000 REMOVING AND INSTALLING STEERING WHEEL

Without Airbag (SRS):

Lift out BMW emblem.

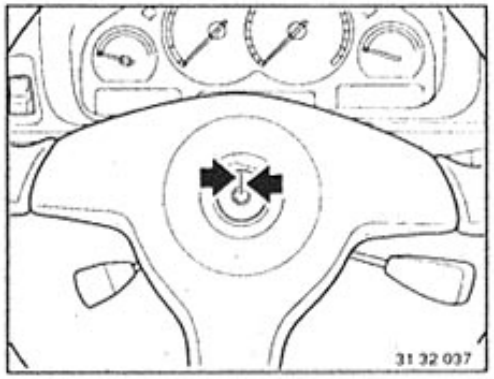

Unscrew screw.
Mark position of steering wheel to steering spindle.
Pull off steering wheel.

Installation:
Tightening torque*.

Important!
Don't damage the turn signal self-canceling cams – set turn signals to center position.

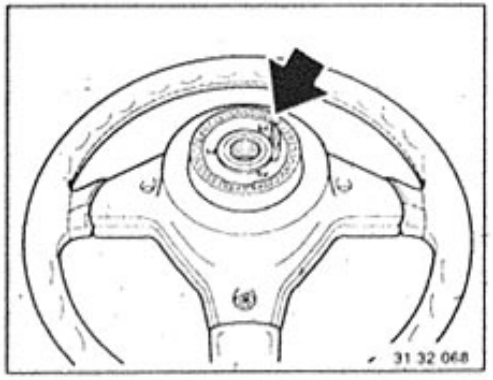

Installation:
Coat slip ring with grease**.

With Airbag (SRS):

Caution!
Conform with safety precautions! Incorrect handling could cause activation of the airbag and lead to injuries. Disconnect battery and cover ground pole or terminal.

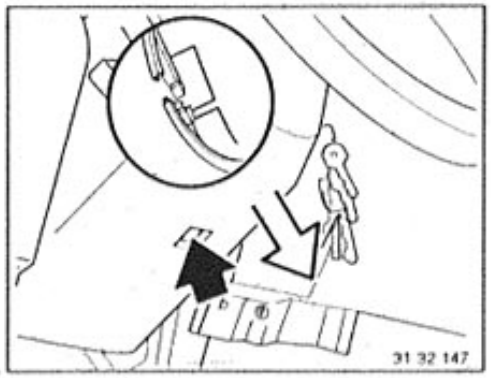

Unscrew screw.
Pull lower steering column casing section off of the upper section.

Installation:
Check for correct seating of the lock.

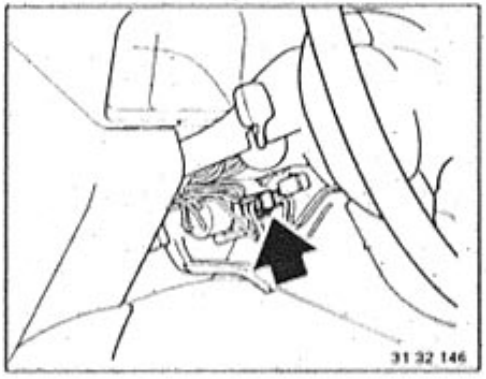

Turn plug (orange) out of the holder and disconnect.

See Specifications
See Operating Fluids

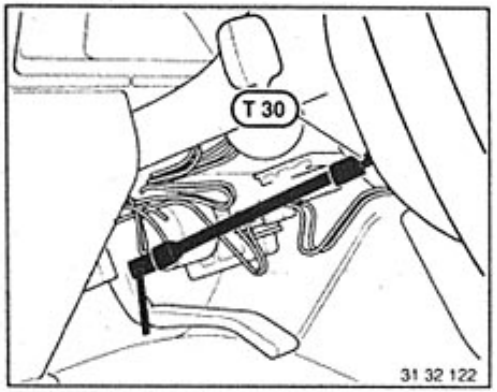

Until mod.95
Loose screws (Innentorx T 30).

Installation:
First tighten the right screw, viewed in direction of travel.
Do not jam cable. Tightening torque*.

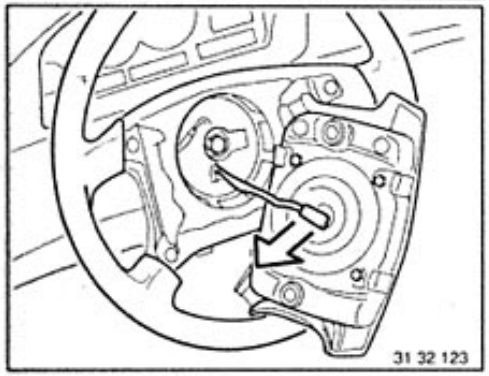

Unfasten connector and remove airbag unit.

Caution!
Airbag must always be placed with padded side facing upwards (trunk).

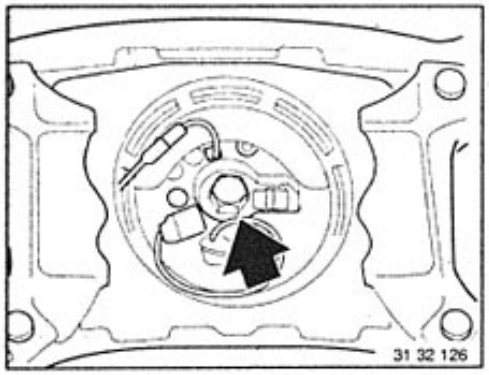

Move steering wheel into straight-ahead setting (marking on steering gear and on steering spindle).
Unfasten screw, mark relative position of steering gear to steering spindle

Installation:
Tightening torque 32 33 1AZ*.

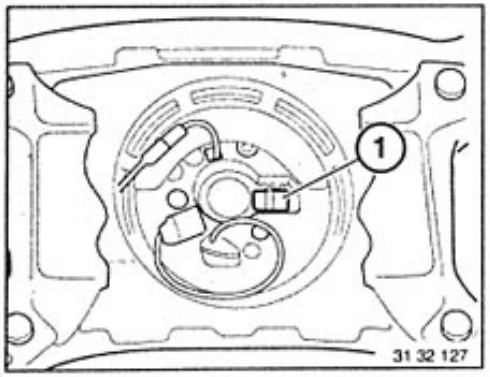

Note:
When the screw is loosened, the torsion spring (1) becomes effective, securing the contact ring in its center position.

* Refer to Technical Data

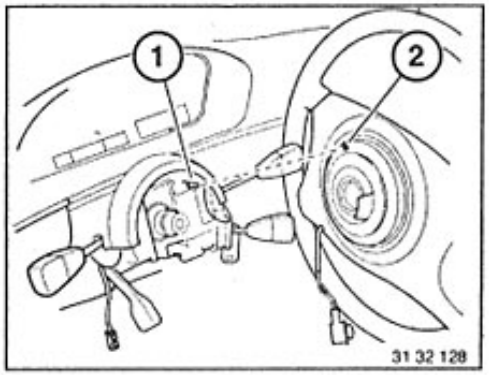

Installation:
Locating pin (1) must engage in recess (2).
Tightening torque*.

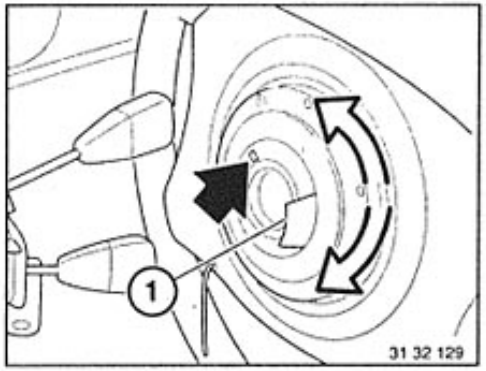

If necessary, adjust contact ring:
Press down spring (1) – turn contact ring to left or right stop, turn back approx. 3 complete turns until marker arrows for center position are aligned, then release spring (1).

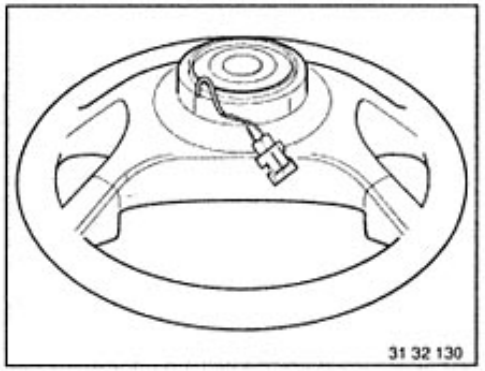

Installation:
Coat slip ring with grease**.

* Refer to Technical Data
** Refer to Operating Fluids Specifications

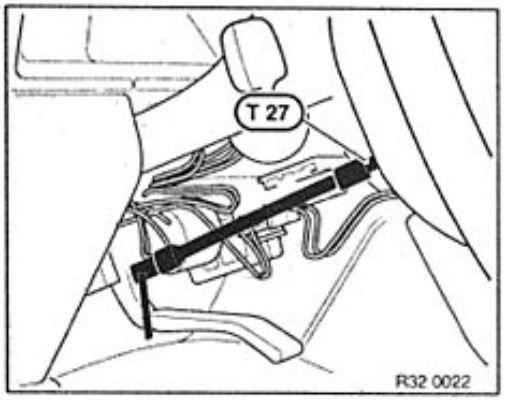

From mod. 95
Unfasten both screws (internal Torx T 27).
Remove connector from squib, pull off horn contact and remove airbag unit.

Caution!
Airbag unit must be stored with pad facing upwards (trunk).

Installation:
Do not jam cable. Tightening torque, refer to Technical Data 32 34 1AZ.

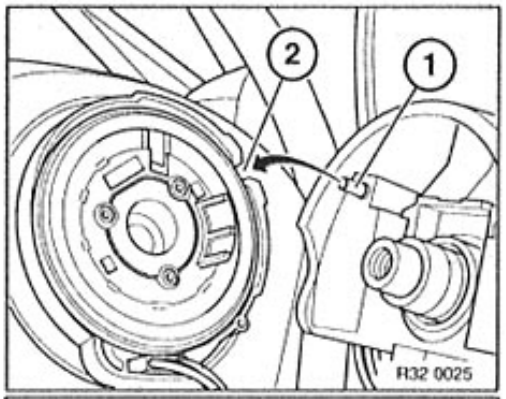

Installation:
Detent pin (1) must engage in recess (2).

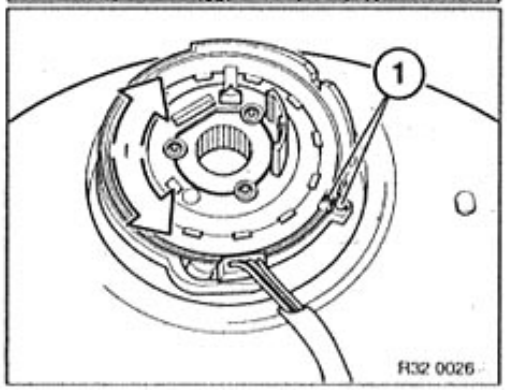

Installation:
If necessary, adjust contact ring:
Press down on spring (F).
Determine centre position of contact ring by halving total number of turns. Ensure all marks (1) are accurately aligned.
Release spring (F).

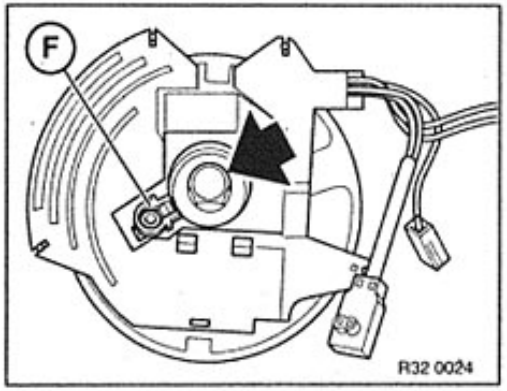

Move steering wheel into straight-ahead position (marks on steering gear and steering spindle must be aligned).

Unfasten screw, mark position of steering wheel relative to steering spindle and remove.

Note:
When screw is unfastened, torsion spring (F) becomes active, securing the contact ring in centre position.

Installation:
Tightening torque, refer to Technical Data 32 33 1AZ.

- with Airbag II

Refer to Repair Instructions for 3 Series E36.

AIRBAG SYSTEM (SRS)

Components:

1 Steering wheel with airbag unit (airbag, gas generator, ignition pill and contact ring)

2 Diagnosis unit

3 Knee guard (US model)

4 Two crash sensors (left and right on wheel house)

5 Airbag control lamp (in instrument cluster)

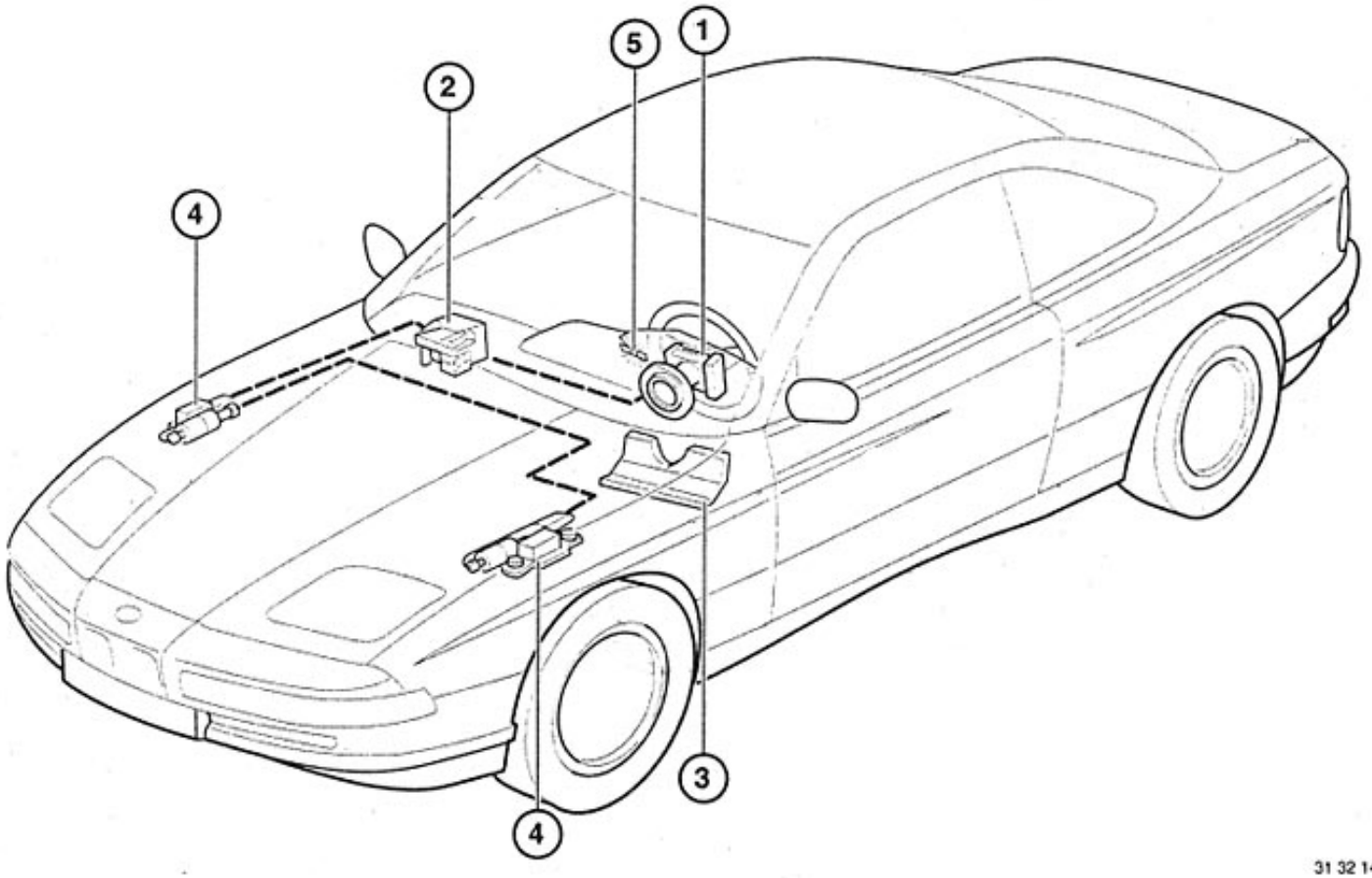

31 32 144

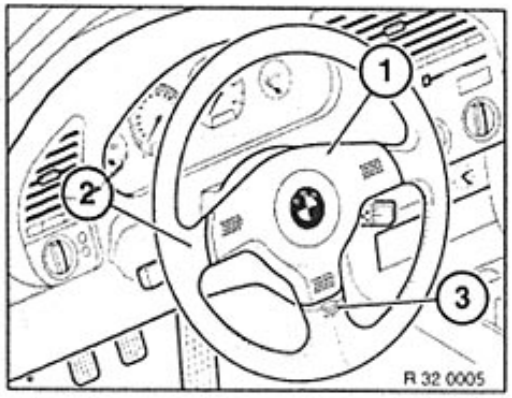

Airbag II

Components:

1 Airbag unit (airbag, gas generator, ignition squib)
2 Steering wheel (contact rings or coil springs, electronics)
3 Indicator lamp

Basic / central airbag unit

Components:

Basic airbag unit, EEC / Central airbag unit US (under the oddments tray beside the handbrake lever)

Steering wheel with airbag unit (airbag, gas generator, ignition squib and contact ring).

Airbag indicator lamp (in the instrument cluster)

Passenger airbag unit (airbag, gas generator, ignition squib)

Knee guard (US model)

Function

The system is triggered by sensors when vehicle retardation is equivalent to a direct head-on collision at no less than 18 km/h with a solid obstacle (i.e. one which does not yield).

This closes the circuit, igniting the gas generators. This sudden combustion causes non-toxic gases to be released by the solid fuel mixture. These completely inflate the folded airbag in the steering wheel and instrument panel within the space of approx. 30 ms.
When fully inflated, the airbag minimizes injuries to head and upper torso in head-on collisions. Discharging takes place through two holes on the side of the airbag facing away from the driver / passenger.

Monitoring:

The airbag system is monitored continuously by a diagnosing unit from ignition lock position "1". The control lamp comes on and goes out again after about 6 seconds to indicate that the system is ready for use.

If this lamp comes on again, there is a detected fault in the system.
Self – diagnosis – interrogate the fault memory with the BMW DIAGNOSING SYSTEM.
Airbag II troubleshooting, refer to Repair Instructions for 3 Series E36.

Safety rules for handling airbag gas generators

Refer to Repair Instructions for 3 Series E36.

32 34 020 Removing and installing or replacing airbag

Caution!
Note safety regulations!
Incorrect handling can trigger the airbag and may cause injury.
Disconnect battery and cover ground terminal.

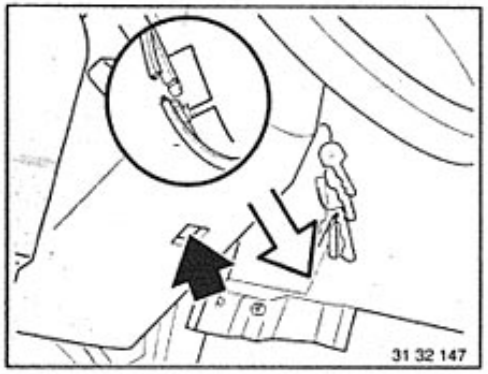

Unfasten screw.
Remove lower section of steering column trim from upper section.

Installation:
Check that locking fixture is correctly seated.

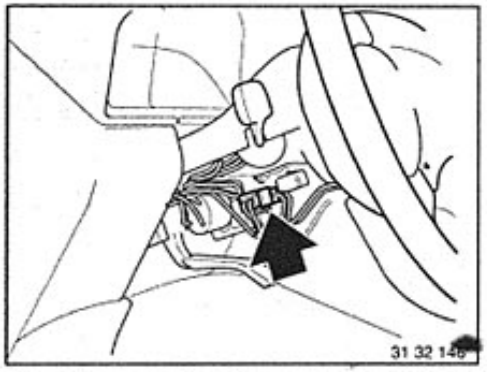

Twist plug connection (orange) out of bracket and disconnect.

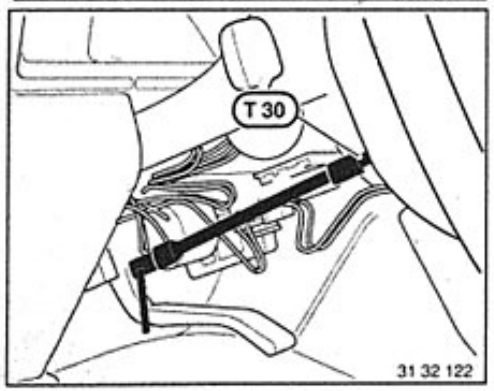

Loose screws (Innentorx T 30, from mod. 95 T 27).

Installation:
First tighten right screw in direction of travel.
Do not jam cable.
Tightening torque*.

* Refer to Technical Data

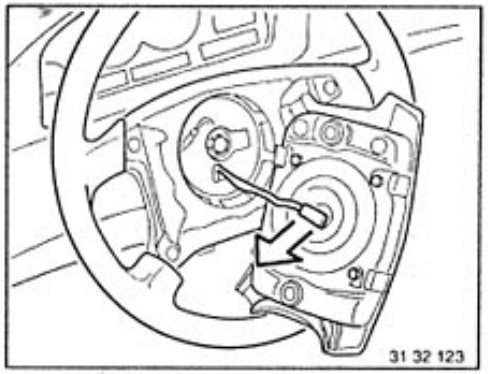

Unfasten connector and remove airbag unit.

Caution!
Airbag must always be laid aside (in trunk) with impact pad facing up.

Airbag II:

Refer to Repair Instructions for 3 Series E36.

32 34 504 Additional work with passenger airbag
– Steering wheel removed –

Caution!
Note safety regulations!
Incorrect handling can trigger the airbag and may cause injury.

Lift cover off airbag.
Unfasten screws, lift off passenger airbag and remove connector.

Caution!
Only place passenger airbag to one side (in trunk) with impact pad facing up.

32 34 510 Replacing contact ring (Airbag)

Caution!
Note safety regulations!
Incorrect handling can trigger the airbag and may cause injury.
Remove steering wheel 32 33 000.

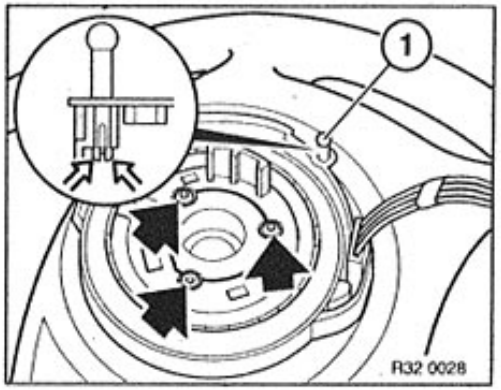

from mod. 95
Unfasten screws and remove contact ring.
Caution!
Do not remove anti-twist retainer (1) until contact ring is screwed to steering wheel.

Press together both ends and remove anti-twist retainer (1).

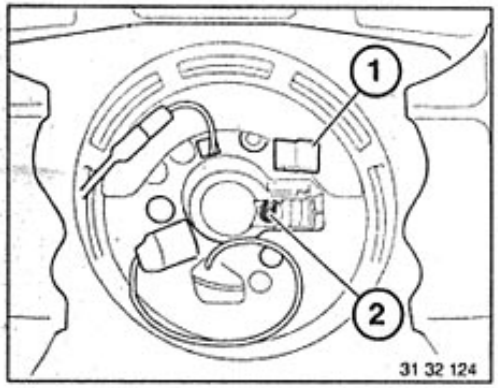

Lift out interlock (1) with screwdriver.

Installation:
Install spring (2) in bore and fit interlock.
Press interlock down until it engages.

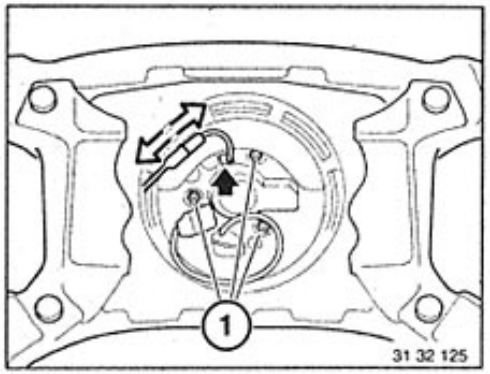

Disconnect plug connection.
Unfasten nuts (1) and remove contact ring.

Installation:
Insert horn cable through rectangular aperture.
Secure nuts with paint.

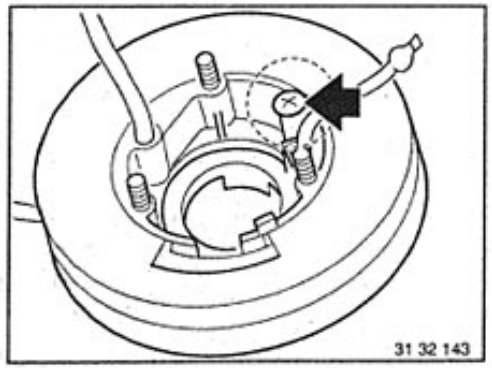

Caution!
A new contact ring is secured in centre position with a screw. This screen must be removed once the contact ring has been screwed to the steering wheel.

65 77 010 REMOVING AND INSTALLING OR REPLACING AIRBAG DIAGNOSIS UNIT

Caution!
Conform with safety precautions! Improper handling could cause activation of the airbag and lead to injuries. Disconnect battery and cover negative pole or terminal.

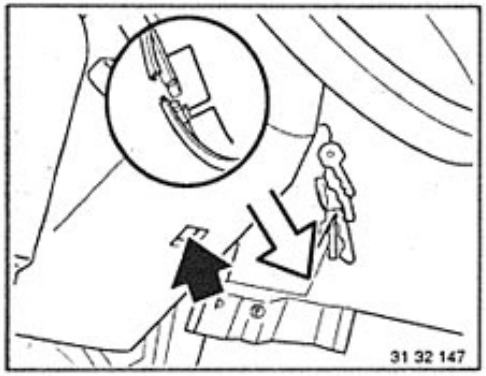

Unscrew screw.
Pull lower steering column casing section off of the upper section.

Installation:
Check for correct seating of the lock.

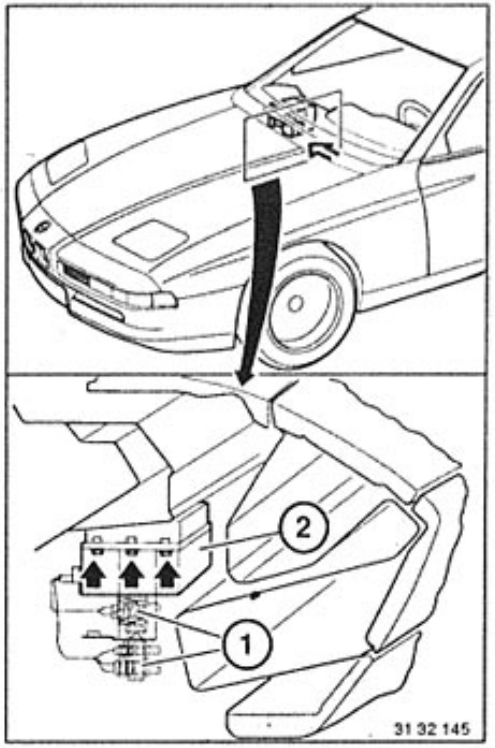

Remove trim panel for dashboard at bottom right.

Disconnect (orange) plugs (1).
Unscrew screws.
Remove diagnosis unit (2).

Installation:
Arrow on unit faces forward.

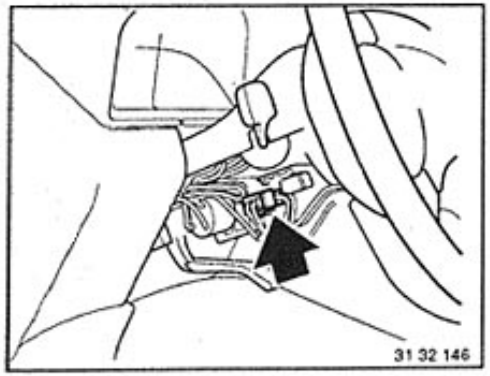

Twist plug (orange) out of the holder and disconnect.

65 77 012 Removing and installing or replacing control unit for airbag II

see Repair Instructions for 3 Series E36.

65 77 016 Removing and installing basic / central airbag

Caution!
Observe safety regulations!
Incorrect handling can trigger the airbag, possibly causing injury.
Disconnect battery and cover ground terminal.
After assembly, perform function check.

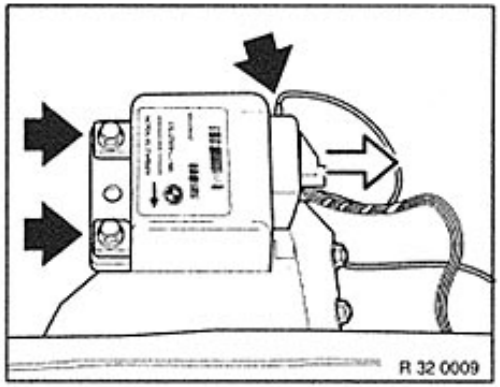

Remove oddments tray, see 51 16 200.
Unfasten screws, disconnect cable connector and remove basic / central airbag unit.

Installation:
Arrow on unit points in direction of travel.

65 77 018 Replacing basic / central airbag unit

Remove and install basic / central airbag unit, see 65 77 016.

Code new unit wity MoDiC.

65 77 015 REPLACING CAPACITOR OF AIRBAG DIAGNOSIS UNIT

Remove diagnosis unit – see 65 77 010.

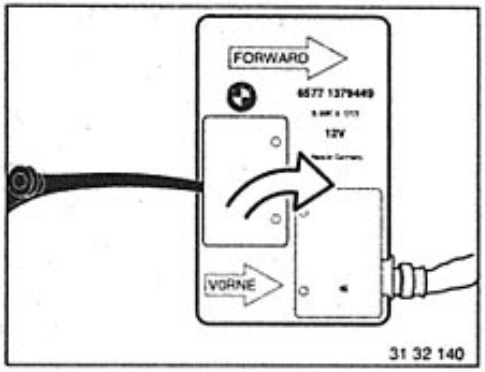

Open cover with a feeler gage blade (0.20 mm) or small screwdriver.

Installation:
Install new cover.

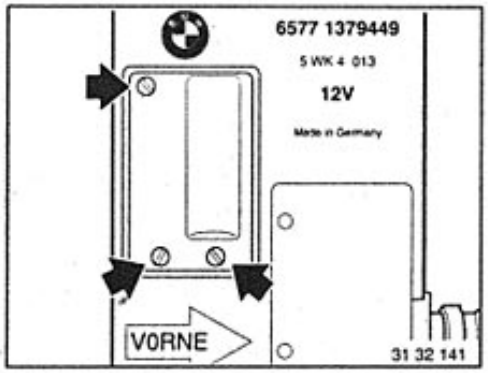

Unscrew screws and take off capacitor.

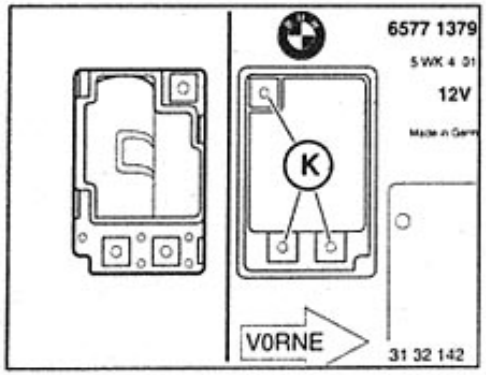

Installation:
Clean contact surfaces (K).

65 77 020 Removing and installing or replacing one front airbag sensor

Caution!
Observe safety instructions!
Incorrect handling can trigger the airbag, possibly causing injury.
Disconnect battery and cover ground terminal.

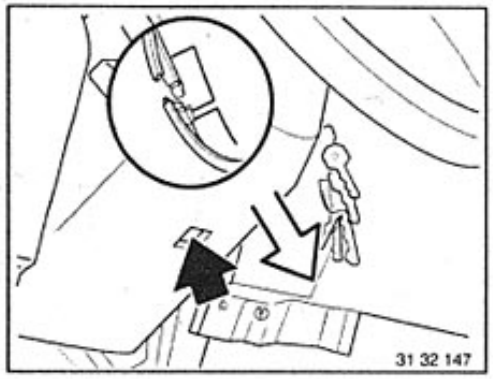

Unfasten screw.
Remove lower section of steering column trim from upper section.

Installation:
Ensure that locking fixture is correctly located.

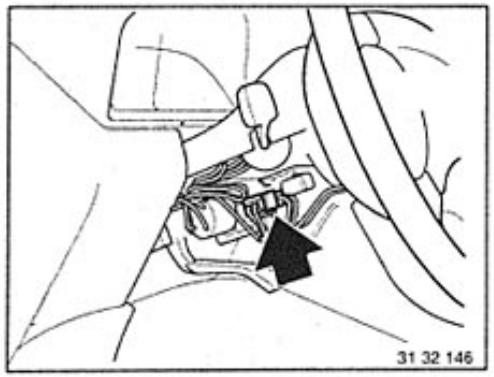

Twist connection (orange) out of bracket and unfasten.

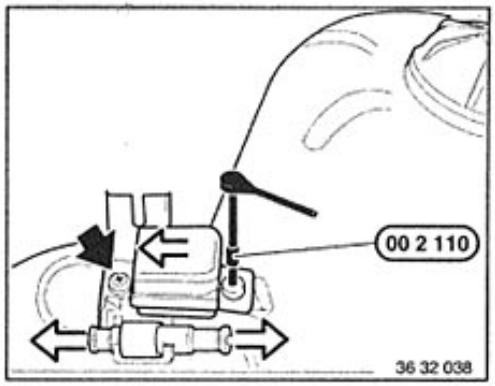

Unfasten connector and unscrew screws using tool 00 2 110.

Installation:
Arrow on sensor points in direction of travel.
Tightening torque*.

* Refer to Technical Data

32 41 005 CHECKING OPERATION OF POWER STEERING (H-31 System)

– Engine at Operating Temperature –
Check hydraulic fluid level in tank.
Check all hose connections and equipment (pump, brake booster, power flow regulator and steering gear) for leaks before checking operation.

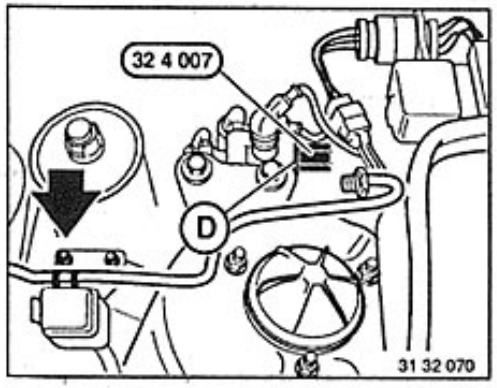

Discharging Pressure:
Stop engine and operate brake pedal about 20 times.
Unscrew pipe on power flow regulator and connect Special Tool 32 4 007.

D = Gasket

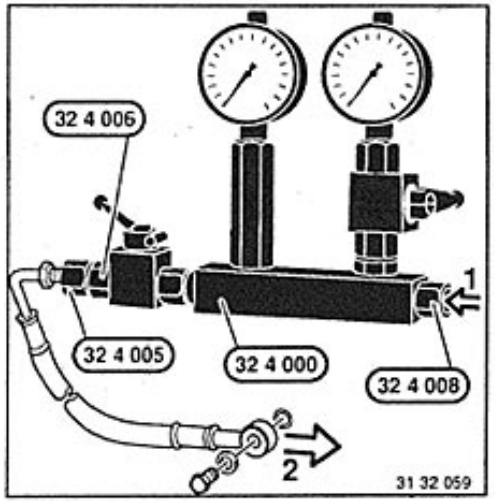

Install Special Tools 32 4 000 / 005 / 006 / 008 between pump (1) and power flow regulator (2).

Note:
Special Tool 54 3 100 could also be used instead of Special Tool 32 4 000.

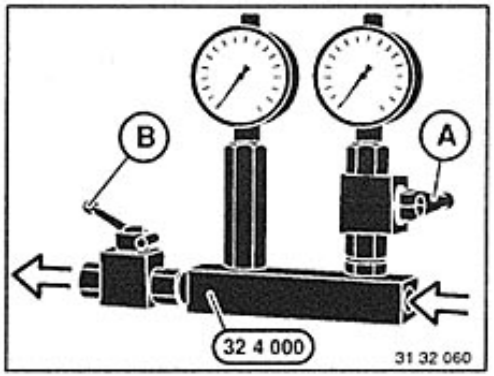

A = Shutoff valve (low pressure from 0 to 15 bar / 0 to 213 psi)
B = Shutoff valve (high pressure from 0 to 150 bar / 0 to 2133 psi)

Caution!
Shutoff valve (A) must always be closed for high pressure tests to avoid damaging the pressure tester.

Open valve (B).
Close valve (A).
Start engine and fill tank with hydraulic fluid*.

Bleeding System:
Turn steering wheel twice each against left and right locks.
Operate brake pedal 5 times, wait 30 seconds and operate pedal another 5 times.

Hydraulic fluid temperature should be approx. 50° C (122° F) for all tests.
If necessary, increase the temperature by turning the steering wheel against locks with the engine running.

1. Checking Flow Pressure:
Open valve (B).
Close valve (A) and run engine.
Open valve (A) and read pressure when pressure is less than 15 bar (213 psi). Max. permissible flow pressure of 8 bar (114 psi) must not be exceeded.
Pressure greater than 8 bar (114 psi): check power flow regulator and steering gear.

32 41 505 CHECKING POWER FLOW REGULATOR AND STEERING GEAR

Discharge pressure. Install pressure tester between power flow regulator and steering gear. Bleed system. Carry out test as described above. With pressure less than 8 bar (114 psi), replace power flow regulator – see 34 33 100. With pressure more than 8 bar (114 psi), replace steering gear – see 32 13 060. Recheck flow pressure between pump and power flow regulator.

* See Operating Fluids

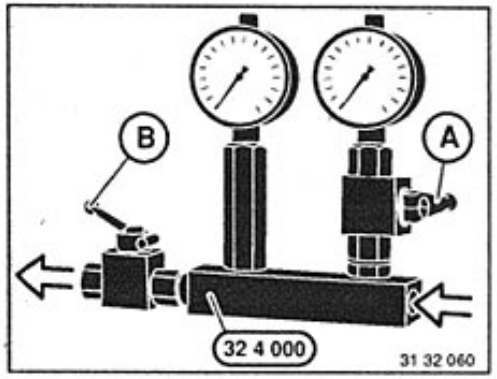

2. Checking Pump:
Install pressure tester between pump and power flow regulator.
Close valve (A).
Start engine.
Close valve (B) max. 10 seconds and read pressure.
Rated pump pressure* æ 10 % should be reached.
Rated pressure* exceeded, replace pump – see 32 41 061.
Rated pressure* not reached, check drive belt tightness – see 32 41 109.
Repeat test.
Rated pressure* still not reached, replace pump – see 32 41 061.

3. Checking Reservoir Charge Pressure:
Pressure tester between pump and power flow regulator.
System bled.
Engine not started.
Vlave (B) open.
Valve (A) closed.
Start engine and observe pressure tester.
Pressure must rise to max. 57 bar (811 psi) and then drop immediately to less than 8 bar (114 psi).
If max. permissible pressure of 57 bar (811 psi) is exceeded or there is no immediate pressure drop after reaching the maximum permissible pressure, replace power flow regulator – see 34 33 100.

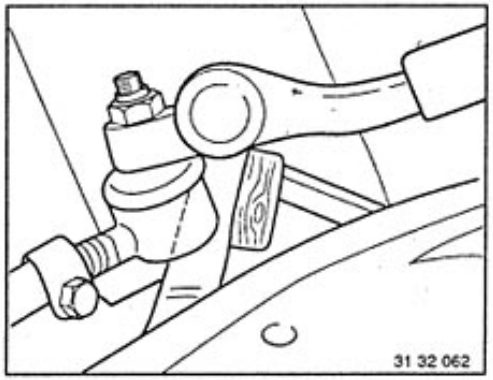

4. Power Steering:
Pressure tester between pump and power flow regulator – system bled – valve (B) open – valve (A) closed – engine not started.
Lift car.
Stop steering from reaching final left lock by 1/2 to 3/4 steering wheel turn with a piece of wood or something similar.

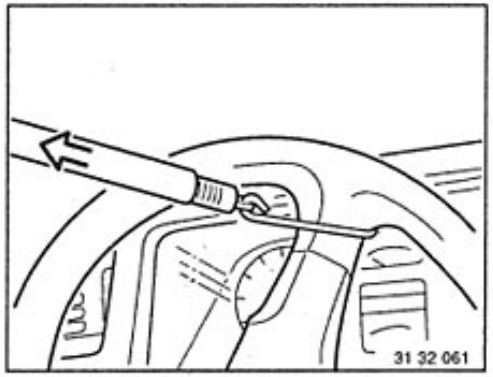

Start engine.
Pull steering wheel against final left lock with a force of 100 N (22 lbs.) (force meter) about 5 seconds and read pressure.
If pressure values are lower than pump pressure determined in point 2, replace steering gear – see 32 13 060.

* See Specifications

5. Check mechanical backlash in the steering unit:

- Pressure point is set 32 13 014
- No backlash in steering column

Pressure measuring device between pump and 3-phase controller– System vents – Valve (B) open – Valve (A) closed – Engine not switched on.
Ensure that pitman arm is in straight-ahead position.

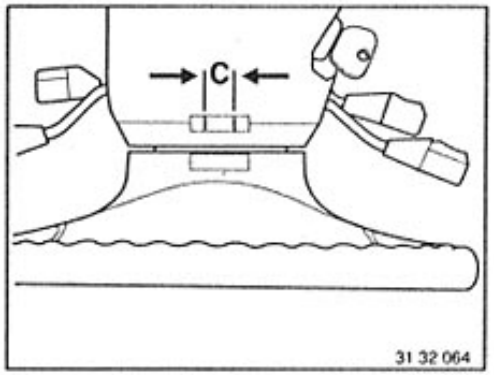

Turn steering wheel to left until pressure measuring device indicates 1 bar rise in pressure over throughput pressure.
Mark position of steering wheel hub.
Repeat procedure with steering wheel on right-hand lock.
If max. perm. travel (C) = 7 mm is exceeded, the steering gear must be replaced – 32 13 060.
Remove retaining fixture and pressure measuring device.
Vent hydraulic system and, if necessary, top up hydraulic fluid.

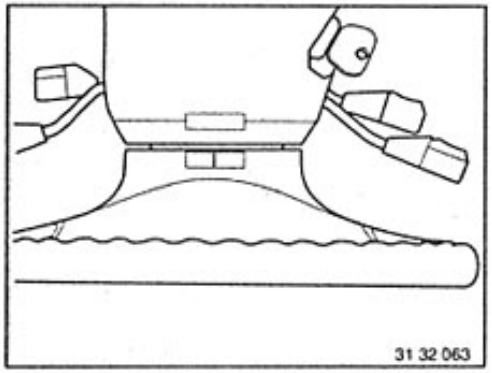

Attach paper strip to steering wheel hub and upper section of trim.
Fit marker to steering wheel hub (center).

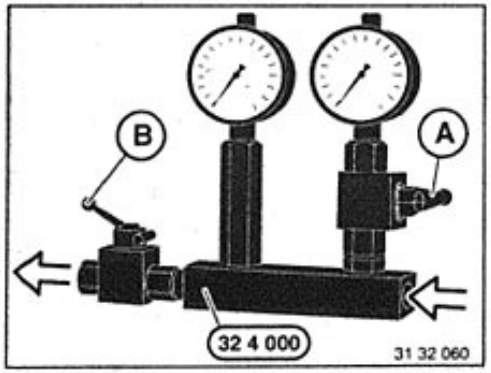

Switch on engine and open valve (A).
Read off throughput pressure.

* Refer to Operating Fluids Specifications

32 41 060 Removing and installing vane pump (tandem pump) for power steering unit

Drain pressure accumulator – Depress brake pedal approx. 20 times.
Draw hydraulic fluid out of container – and do not reuse.
After assembly of power steering unit, bleed: refer to 32 13 006.

Remove ribbed vee belt.

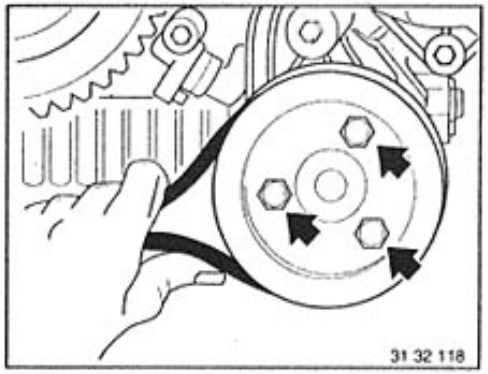

Grip pulley with help of ribbed vee belt.
Unfasten screws.

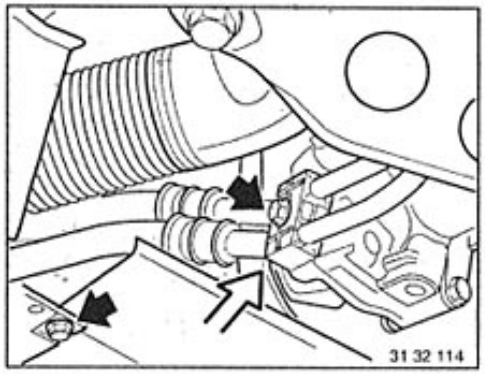

Remove splash guard.
Unfasten oil cooler line.

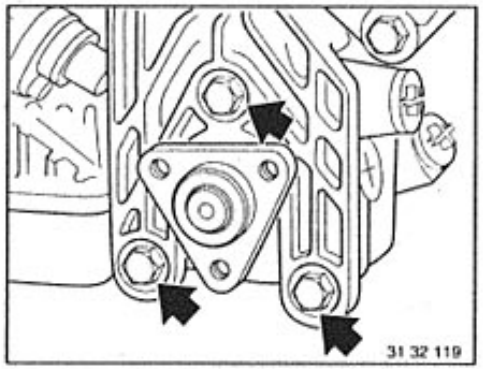

Tandem pump:
Unfasten screws.

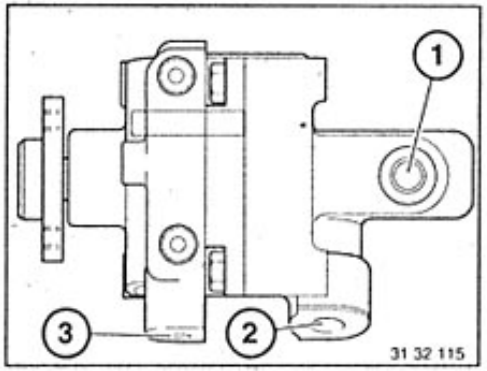

Remove lines.

Installation:
Replace gaskets.
Tightening torque*.
Bleed hydraulic system 32 13 006.

1 to steering unit
2 to container
3 to ASC +T plunger unit

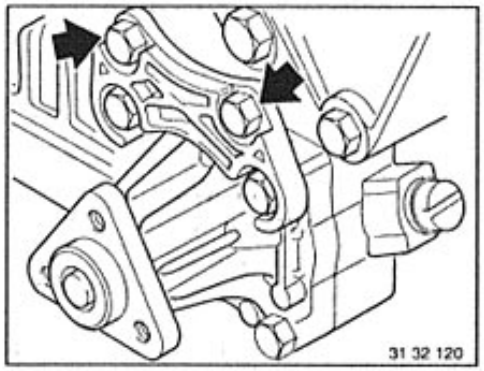

Vane pump:
Unfasten screws.

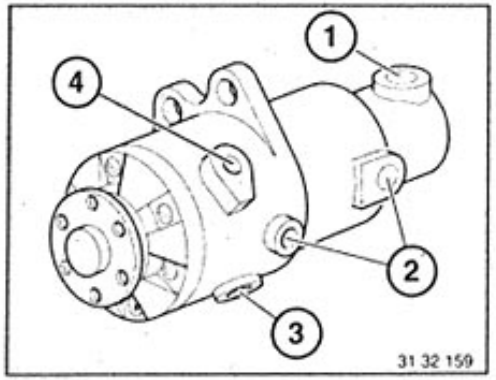

Three-circuit pump:

1 to steering unit
2 to container
3 to ASC +T plunger unit
4 to accumulator charging unit for Active Rear Axle Kinematics (AHK)

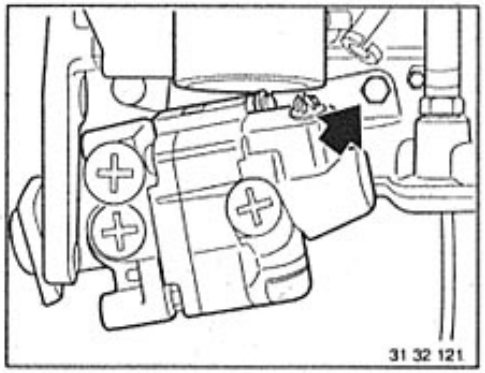

Unfasten screw.
Remove vane pump or tandem pump.

* Refer to Technical Data

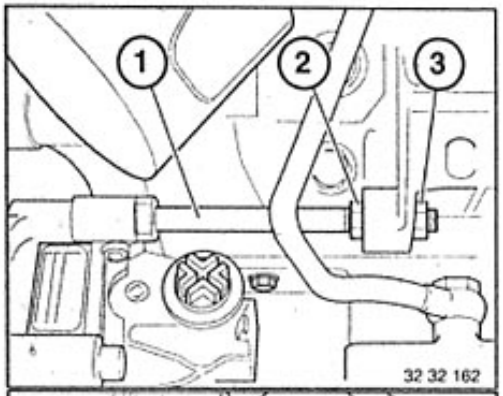

from mod. 94:
Loose nut (3).

Installation:
Secure support (1) to pump.
Tightening torque, refer to Technical Data 32 41 2AZ.
Tighten nut (2) hand-tight against engine support screws.
Tighten down nut (3). Tightening torque, refer to Technical Data 32 41 2 AZ.

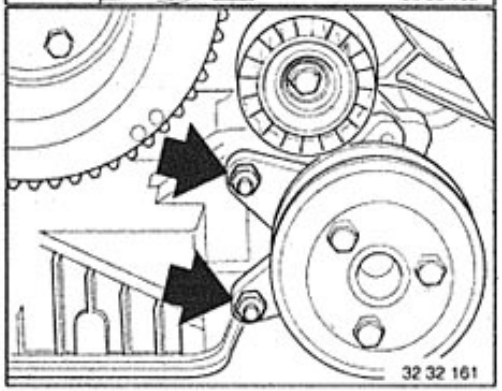

Unfasten retainer on oil pan and remove pump.

Installation:
Tightening torque, refer to Technical Data 32 41 2AZ.

POWER STEERING IMPELLER PUMP

1 Holder
2 Body
3 Face plate
4 Rotor
5 Shaft
6 Circlip
7 Radial oil seal
8 Seal
9 Guide
10 O-ring

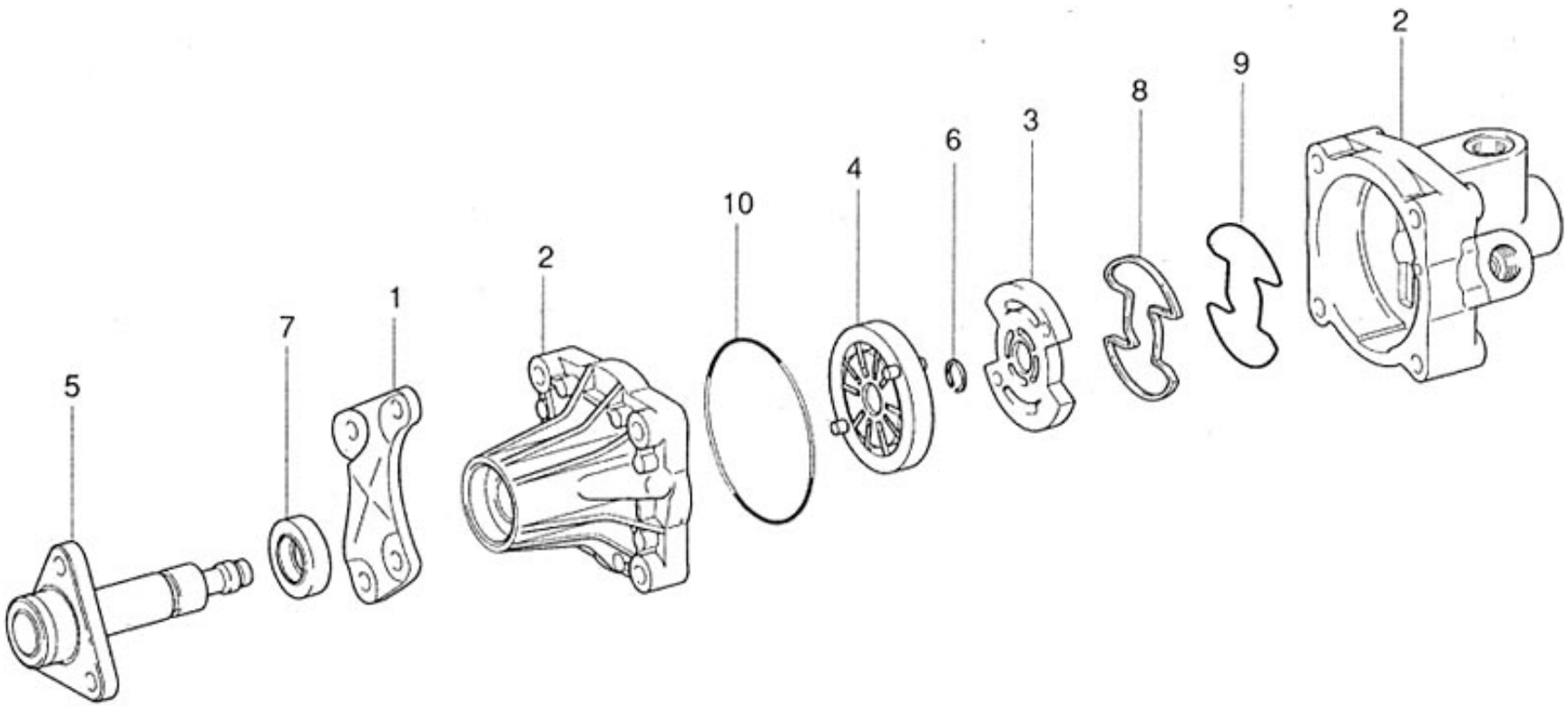

31 32 072

32 41 553 DISASSEMBLING AND ASSEMBLING POWER STEERING IMPELLER PUMP – Pump Removed –

Absolute cleanliness is essential when working on pumps.

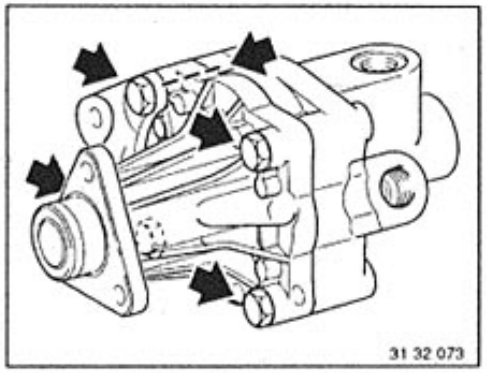

Mark position of holder (1) to pump body (2).
Unscrew bolts and separate housing.

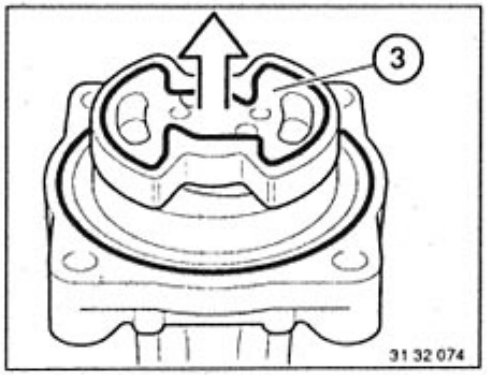

Take off face plate (3).

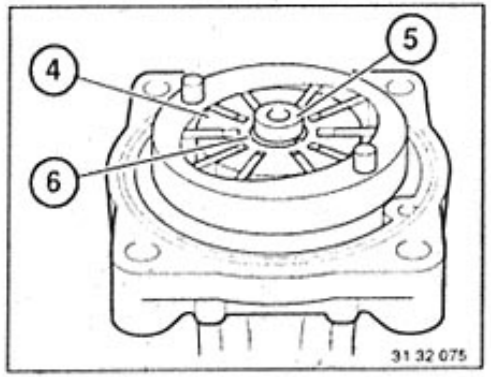

Press down rotor (4) on shaft (5).
Remove circlip (6) and pull shaft out of body.
Remove rotor (4).

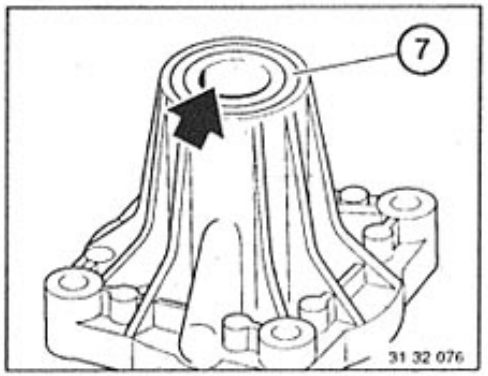

Assembling:
Clean and lubricate all parts with hydraulic fluid.
Replace radial oil seal (7) – sealing lip faces in – and pack space between sealing and dust lips with grease.

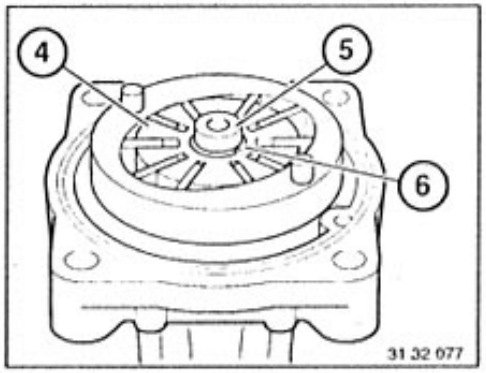

Insert shaft (5) in body.
Mount rotor (4) with recess for circlip facing up and install circlip (6) in radial groove of the shaft.

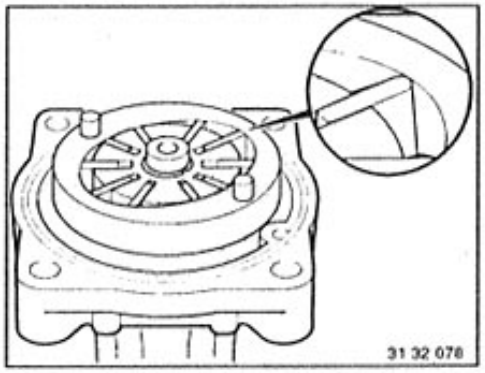

Install the impeller with the polished, rounded outside surfaces facing the cam ring.
Check that impeller moves easily.

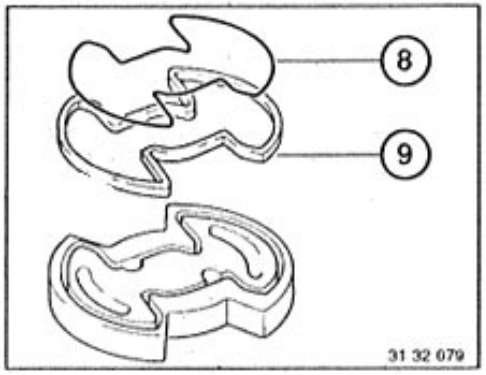

Install seal (8) with wide end facing down and guide (9) in face plate (3).

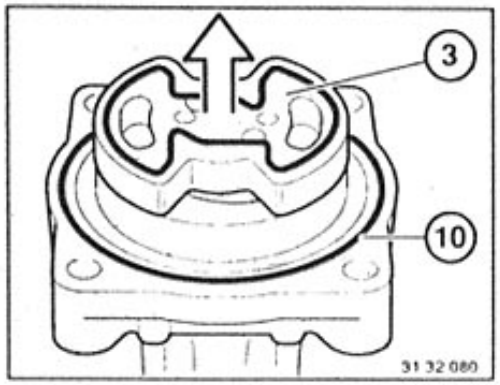

Install face plate (3) on dowel pins.
Replace O-ring (10).

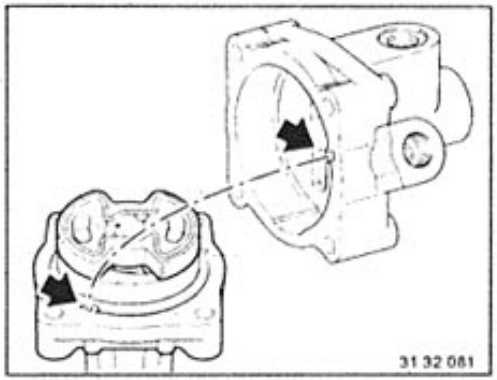

Mount body (checking that bores are aligned) and bolt down with the holder. Tightening torque = 16 ... 19 Nm (12 ... 14 ft. lbs.).

Check function after installation of the power steering impeller pump.

TANDEM PUMP

1 Flange
2 Body
3 Face plate
4 Rotor
5 Shaft
6 Axial washer
7 Radial oil seal
8 Seal
9 Guide
10 O-ring
11 Sleeve
12 Slide
13 Piston
14 Spring
15 Shaft
16 O-ring
17 Plug

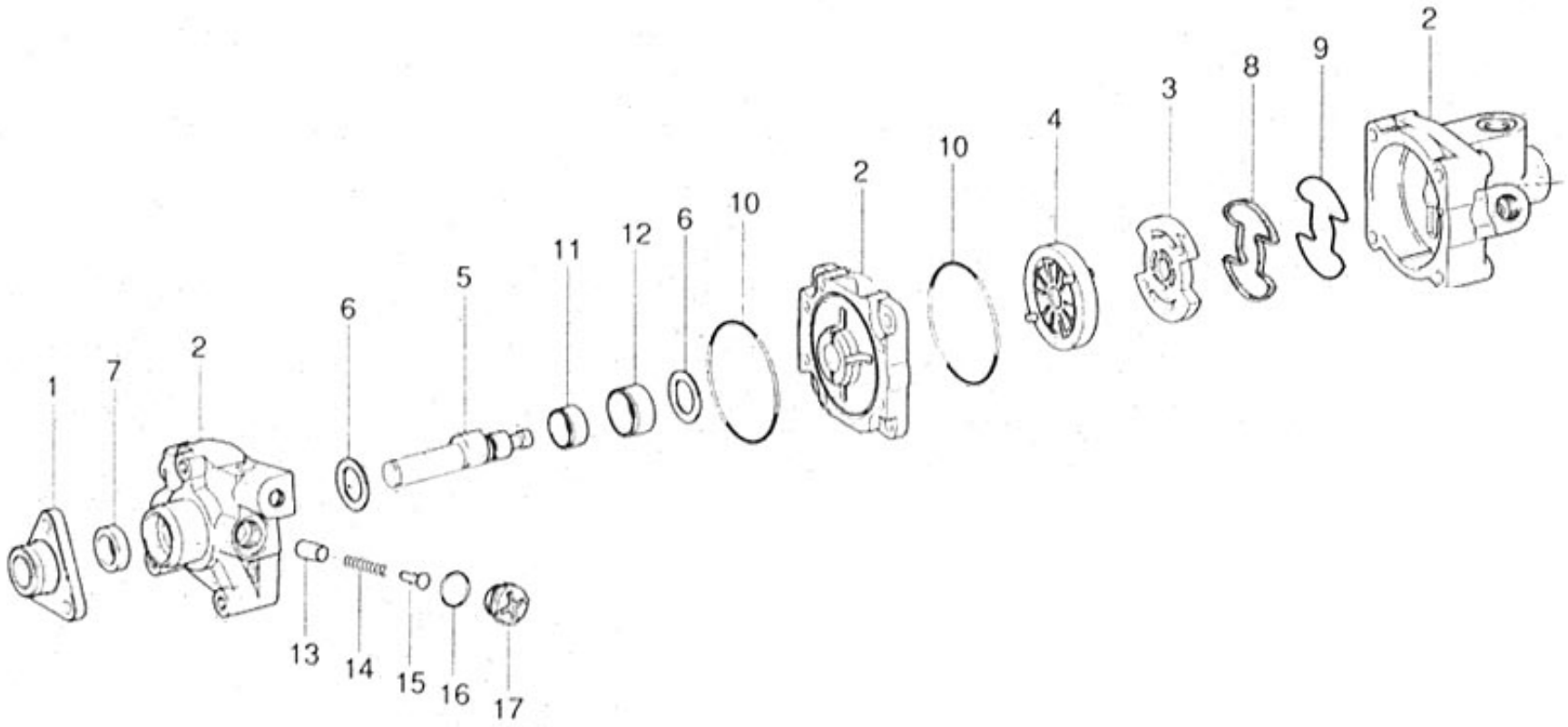

31 32 082

32 41 555 DISASSEMBLING AND ASSEMBLING TANDEM PUMP – Pump Removed –

Absolute cleanliness is required when assembling the pump.
Lubricate all parts with hydraulic fluid.

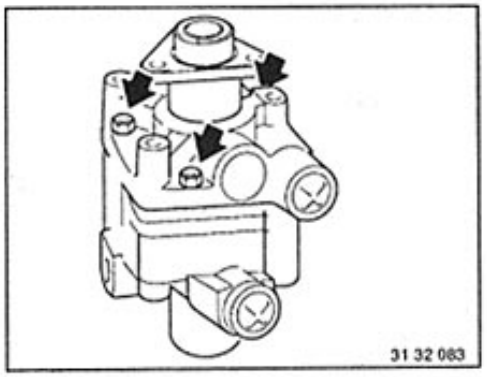

Mark position of the flange to the shaft and body sections to each other.
Unscrew bolts.
Take off body.

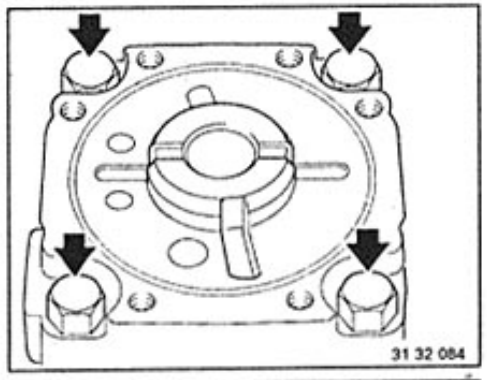

Unscrew bolts.
Take off body (4).

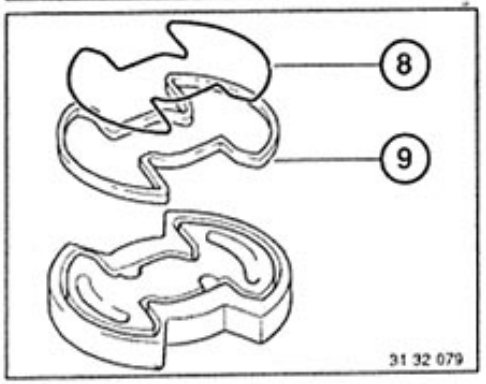

Replace seal (8) (wide end facing plate) and guide (9).

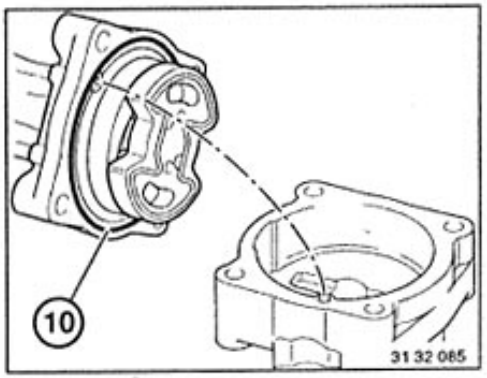

Replace O-ring (10).
Bolt body – bore to bore.
Tightening torque = 14^{+5} Nm (10^{+4} ft. lbs.).

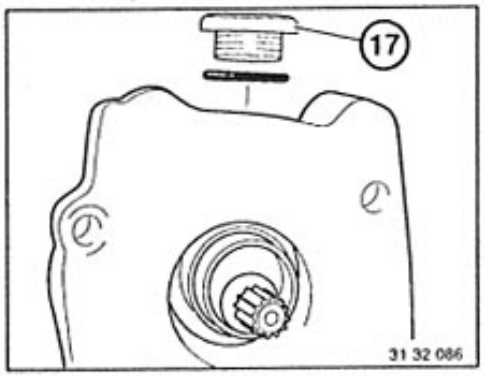

Unscrew both plugs (17).
Take off piston and sliding ring with sleeve.

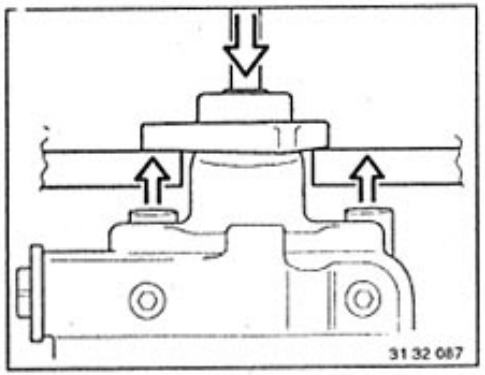

Press triangular flange off of the shaft with a press, while supporting on the flange.

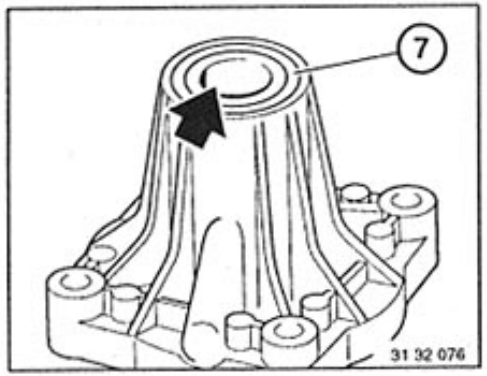

Replace radial oil seal (7) – sealing lip facing in and filled with grease.

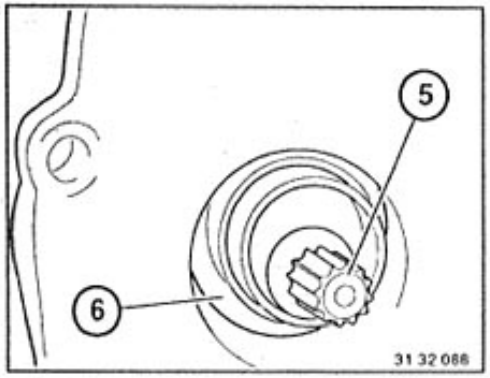

Install axial washer (6) and run in shaft (5).

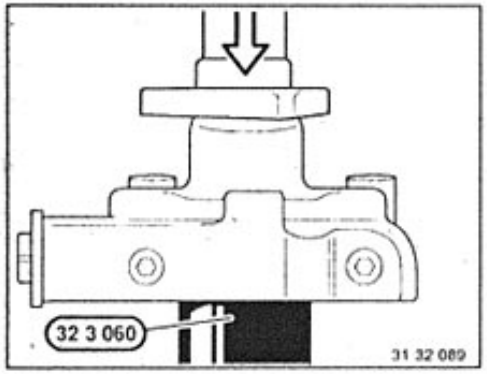

Press on flange with Special Tool 32 3 060.
Shaft protrusion = approx. 1 mm (0.039").
Check marks.

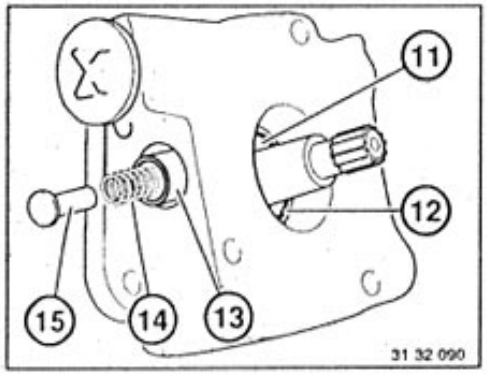

Insert sleeve (11) and sliding ring (12).
Slide in both pistons (13), spring (14) and shaft (15).

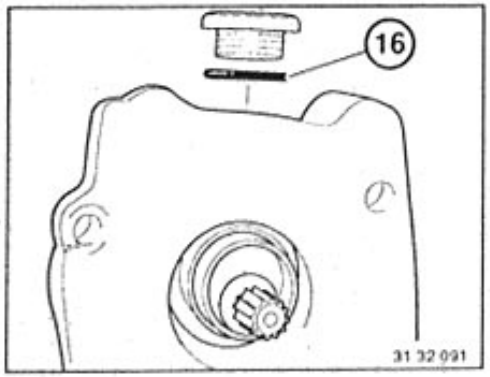

Replace O-ring (16).
Tighten plugs (17) with a torque of 50 Nm (36 ft. lbs.).

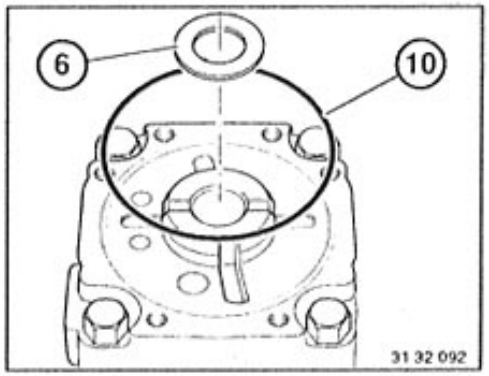

Replace O-ring (10).
Insert axial washer (6).
Mount and bolt body.
Tightening torque = 8 Nm (6 ft. lbs.).
Other jobs – see 32 41 553.

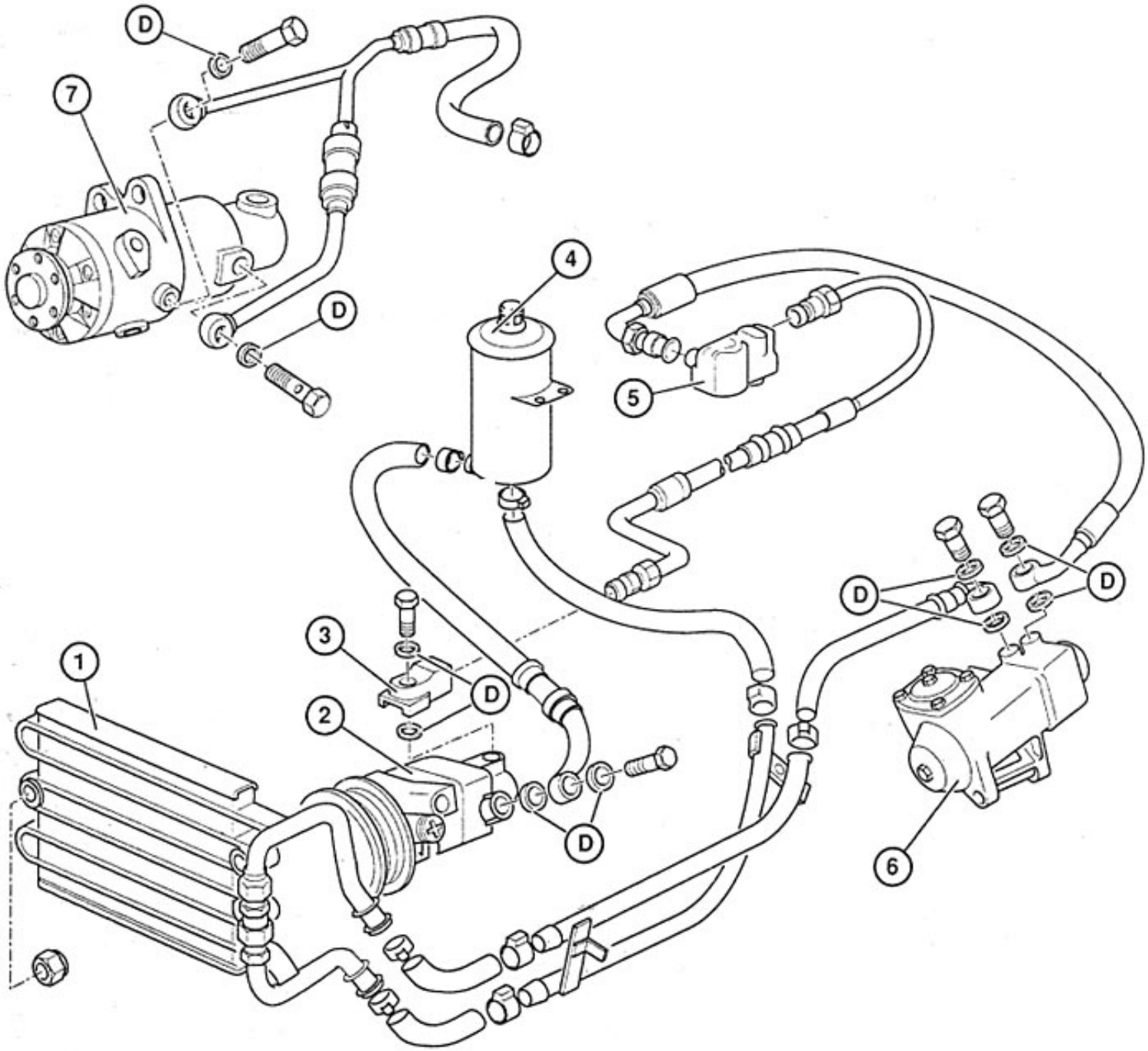

1 Oil cooler
2 Power pump/tandem pump
3 Adapter
4 Oil supply tank
5 Power flow regulator
6 Steering gear
7 Triple-circuit pump for version with AHK (active rear axle kinematic)
D Seals

31 32 158

OIL SUPPLY TANK

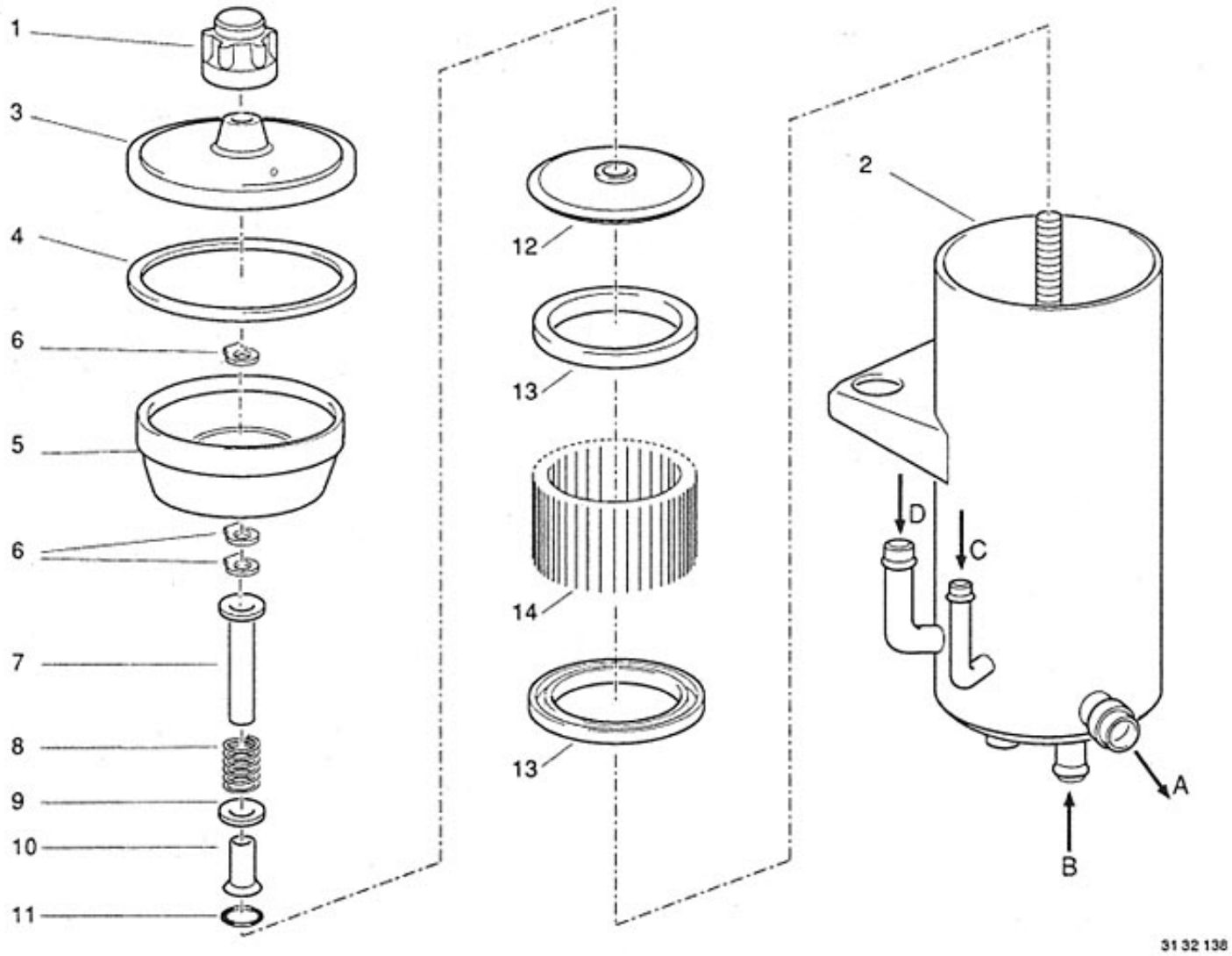

1 Cap
2 Tank
3 Cover
4 Seal
5 Oil strainer
6 Retainer
7 Guide pipe
8 Spring
9 Washer
10 Sleeve
11 O-ring
12 Pressure relief valve
13 Seal
14 Filter element

A To pump
B From steering gear
C From charging valve (power flow regulator)
D From brake booster

OIL SUPPLY TANK (with ASC + T)

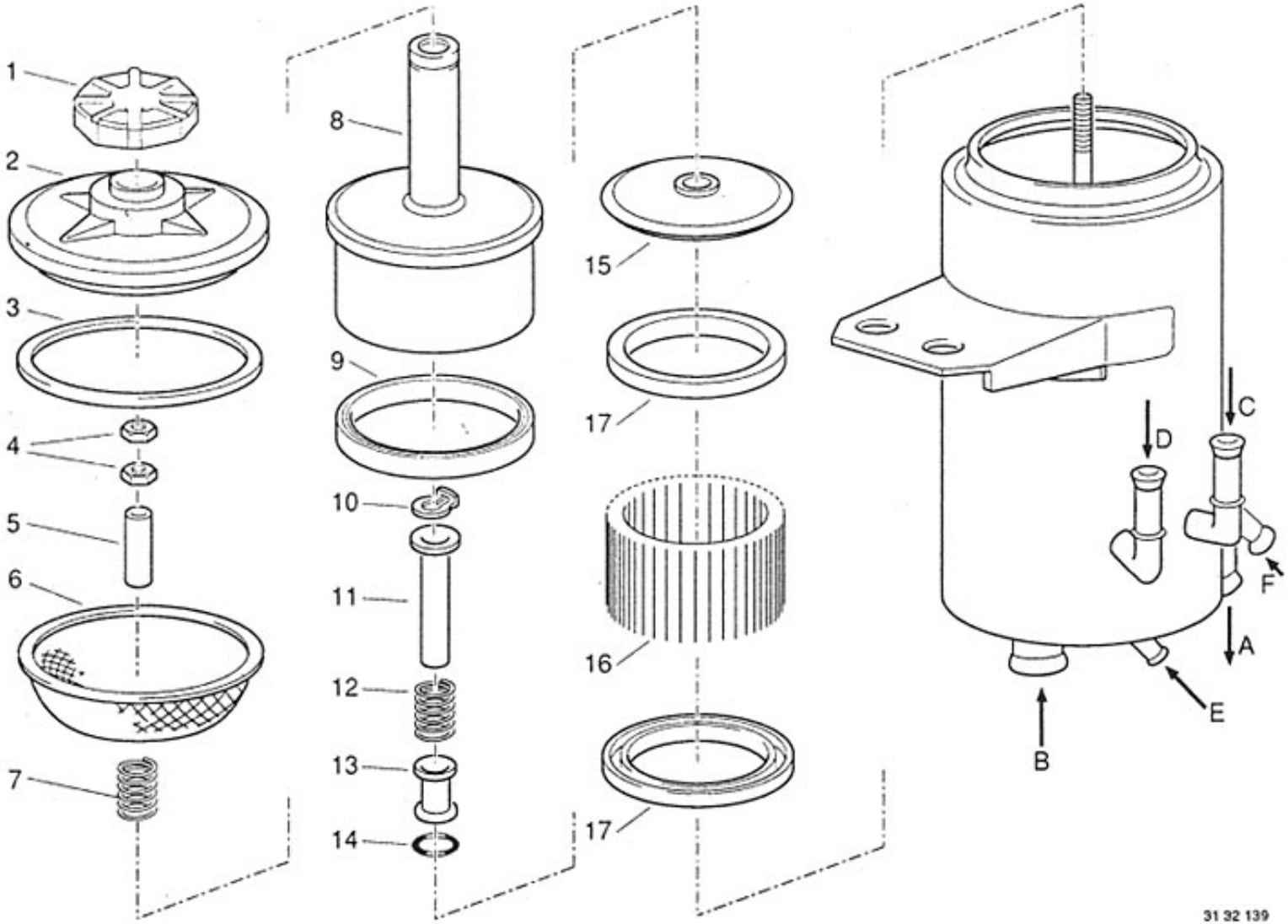

1	Cap
2	Cover
3	Seal
4	Nut
5	Pipe
6	Oil strainer
7	Spring
8	Oil strainer
9	Seal
10	Retainer
11	Guide pipe
12	Spring
13	Spacer
14	O-ring
15	Pressure relief valve
16	Filter element
17	Seal

A	To pump
B	From steering gear
C	From charging valve (power flow regulator)
D	From brake booster
E	From ASC+T (recirculation)
F	From ASC+T (return)

33 Rear axle